DIMENSIONAL TOLERANCES AND SURFACE FINISHES – UNLESS OTHERWISE SPECIFIED

DECIMALS (√)		FRACTIONS (√)		WELDMENTS		CASTINGS	
PLACES	± TOL	DIMENSION	± TOL	DIMENSION	± TOL	DIMENSION	TOLERANCE
.XXX	.005	< 6"	1/64	< 24"	.062	< 2"	+1/16 −1/16
.XX	.02	6" TO 24"	1/32	>OR= TO 24"	.126	2" TO 5"	+3/32 −1/16
.X	.1	>OR= TO 24"	1/16	ALL PLASTICS		5" TO 8"	+1/8 −3/32
← WHOLE NUMBERS ARE ± 0.1 TOLERANCE →				CONDITION	± TOL	8" TO 12"	+3/16 −1/8
				MACHINED	.010	12" TO 15"	+1/4 −3/16
				MOLDED	.035	>OR= TO 15"	+1/4 −1/4

(√) MACHINED SURFACE FINISHES = 125MUIN (AA). BREAK ALL SHARP EDGES .01 TO .02. ALL ANGLES ± 0 DEGREES 30 MINUTES. MATERIAL SPECIFICATIONS TOLERANCES APPLY TO STOCK SIZES. THREAD DIMENSIONS AND DESIGNATIONS TO BE IN ACCORDANCE WITH NATIONAL BUREAU OF STANDARDS HANDBOOK H–28. UNLESS OTHERWISE SPECIFIED, ALL DIMENSIONS ARE IN INCHES AND FEATURES ARE SYMMETRICAL ABOUT CENTERLINE. AMERICAN SOCIETY OF MECHANICAL ENGINEERS ASME Y14.5M 1994 IS INVOKED WHERE APPLICABLE.

THIS DRAWING HAS BEEN GENERATED AND IS MAINTAINED BY A CAD SYSTEM. CHANGES SHALL ONLY BE INCORPORATED AS DIRECTED BY THE DESIGN ACTIVITY.

DISTRIBUTION STATEMENT D:

DISTRIBUTION AUTHORIZED TO DOD CONTRACTORS ONLY; CRITICAL TECHNOLOGY 11 NOV 2011. OTHER REQUESTS SHALL BE REFERRED TO PEO–SUB OR HIGHER DOD AUTHORITY.

– WARNING –

THIS DOCUMENT CONTAINS TECHNICAL DATA WHOSE EXPORT IS RESTRICTED BY THE ARMS EXPORT CONTROL ACT (TITLE 22, U.S.C., SEC 2751, ET. SEQ.) OR THE EXPORT ADMINISTRATION ACT OF 1979, AS AMENDED (TITLE 50 U.S.C. APP 2401 ET SEQ.). VIOLATONS OF THESE EXPORT LAWS ARE SUBJECT TO SEVERE CRIMINAL PENALTIES. DISSEMINATE IN ACCORDANCE WITH PROVISIONS OF DODD 5230.24.

DESTRUCTION NOTICE

DESTROY BY ANY METHOD THAT WILL PREVENT DISCLOSURE OF CONTENTS OR RECONSTRUCTION OF DOCUMENT.

SUPERSEDING OR MODIFICATION INFORMATION:

SHIP/CLASS	REV
SSN 774 CLASS	V
SSBN (730–743) CLASS	V
SSGN (726–729) CLASS	V
SSN 688 CLASS	V
SSN 21 CLASS	V

SHIP APPLICABILITY

NAVAL SURFACE WARFARE CENTER
CARDEROCK DIVISION
PHILADELPHIA, PA 19112–5083
CAGE CODE 25685
CODE: 96124
PHONE: (215) 897–8773

PREPARED	NDI	DATE 7/16/96
CHECKED	W. COLEMAN	DATE 7/23/96
ENGINEER	P.S. HUANG	DATE 7/23/96
APPROVED	F. BRENNAN	DATE 7/25/96
ACCEPTED FOR NAVSEA	JOHN DOLAN	
APPROVED BY NAVSEA	PAUL DiTARANTO	

DEPARTMENT OF THE NAVY
NAVAL SEA SYSTEMS COMMAND
WASHINGTON NAVY YARD 20376–0001

LIFTING CLAMPS & SLINGS FOR ANTENNA MASTS & PERISCOPES

LFT CLP SLING FOR MAST PERIS

SIZE	CAGE NO.	WT GRP	NAVSEA DRAWING NO.	REV
B	53711	904	4398614	V

SCALE – NONE

SHEET 1 OF 85

INDEX

SHT. NO.	TITLE	REV
1	TITLE BLOCK, DIMENSIONAL TOLERANCES, WEIGHT/CG, DISTRIBUTION STATEMENT, SHIP APPLICABILITY	V
2	INDEX	V
3	REFERENCES	V
4	INDEX: BY ANTENNA/MAST SYSTEM	V
5	GENERAL NOTES	V
6	GENERAL NOTES	V
7	PARTS AND MATERIAL LIST	V
8	PARTS AND MATERIAL LIST	V
9	PARTS AND MATERIAL LIST	V
10	PARTS AND MATERIAL LIST	V
11	PARTS AND MATERIAL LIST	V
12	PARTS AND MATERIAL LIST	V
13	PARTS AND MATERIAL LIST	V
14	PARTS AND MATERIAL LIST	V
15	PARTS AND MATERIAL LIST	V
16	PARTS AND MATERIAL LIST	T
17	PARTS AND MATERIAL LIST	V
18	PARTS AND MATERIAL LIST	V
19	PARTS AND MATERIAL LIST	V
20	ASSY ~~X~~, 2, 4, 6 & 348 – DIMENSIONAL TABLES	V
21	ASSY ~~X~~, ~~X~~, 47, ~~X~~, 338 & 370 – DIMENSIONAL TABLES	V
22	ASSY ~~X~~, ~~X~~, 51, ~~X~~ & ~~X~~ – DIMENSIONAL TABLES	T
23	ASSY ~~202~~, 325 & 334, ~~X~~ ~~X~~ ~~X~~ – DIMENSIONAL TABLES	V
24	ASSY ~~X~~, 2, 348 – FAIRED CLAMP DETAIL	V
25	ASSY 4, 6, ~~X~~, ~~X~~, 47, ~~X~~, 51, ~~X~~ & 370 – LIFTING CLAMPS	V
~~26~~	~~ASSY 49 – ESM26 FAIRED MAST CLAMP~~	~~T~~
27	ASSY ~~X~~, ~~X~~, ~~X~~ ~~X~~ 334 – SNORKEL FAIRED MAST CLAMP	U
~~28~~	~~ASSY 202 – SNORKEL FAIRED MAST CLAMP~~	~~S~~
29	BRAKE LINING & SPACER	V
30	~~BRAKE LINING &~~ WEIGHT TEST FIXTURE	T
31	ASSY 69 – SPREADER BAR; ~~ASSY 77 ANTENNA LIFTING SLING AS 2591, DLA 4 & ESM SAFETY BLOCK~~	T
32	~~ASSY 81 – BUOY LIFTING SLING~~ ASSY 96 & 389 – WIRE ROPE	U
~~33~~	~~ASSY 121 – INSTALLATION AID FOR AS1653 OR AS3327 STACK~~	~~T~~
34	~~INSTALLATION AID ASSY & DETAIL~~ SNORKEL LIFTING SUPPORT BRACKET	V
35	~~ASSY 138 – PROTECTION COVER AND~~ ASSY 298 HOIST CYLINDER CLAMP	V
36	BUOY LIFTING SLING ASSY	T
37	BUOY "T" BAR ASSY	T
38	SPREADER BAR & WIRE ROPE CABLE ASSY	T
39	~~ASSY 226 – SUPPORT CLAMP~~ ASSY 303 – TEST FIXTURE	U
40	ASSY 232 – SLIDING CLAMP	U
41	SAFETY – STOP PIN ASSY	S
~~42~~	~~ASSY 105 – LIFTING SLING (USED ONLY FOR RADAR AB 1185 PEDESTAL)~~	~~V~~

INDEX

SHT. NO.	TITLE	REV
43	~~ASSY 157 – LIFTING PLATE~~ LIFTING RIG AND WEIGHT TEST FIXTURE	T
44	LABEL PLATES	V
45	STRONGBACK ASSY	P
46	STRONGBACK DETAILS	P
47	LABEL PLATES & LINK AND LIFTING LUG	T
48	STRONGBACK CLAMP ASSY	P
49	STRONGBACK LIFTING ASSY	P
50	TEST FIXTURE & SPREADER BAR ASSY	V
51	E AND E ADAPTER SUPPORT BAR ARR & SSN 21 FAIRING "T" BAR ASSY	V
52	SUPPORT BAR AND WEIGHT TEST FIXTURE	V
53	SUPPORT LEG & END CAP	T
54	LIFTING BLOCK ~~& TEST PLATE~~	V
55	ASSY 325 – SNORKEL INNER INDUCTION ~~MAST~~ PIPE LIFTING CLAMP & SPREADER BAR	U
56	ASSY 330 – ~~RADAR LIFTING DEVICE~~ BPS-16 RADAR MAST FIXTURES	V
57	TEST PROCEDURE FOR WEIGHT HANDLING EQUIPMENT	V
58	TEST PROCEDURE FOR WEIGHT HANDLING EQUIPMENT	P
59	TEST PROCEDURE FOR WEIGHT HANDLING EQUIPMENT	V
60	TEST PROCEDURE FOR WEIGHT HANDLING EQUIPMENT	V
61	TEST PROCEDURE FOR WEIGHT HANDLING EQUIPMENT	V
62	TEST PROCEDURE FOR WEIGHT HANDLING EQUIPMENT & TEST WEIGHT REQUIREMENT	V
63	TEST WEIGHT REQUIREMENT	V
64	TEST SETUPS	P
65	TEST SETUPS	S
66	TEST SETUPS	V
67	TEST SETUPS	V
68	TEST SETUP~~S~~	T
69	TEST SETUPS	V
70	PARTS AND MATERIAL LIST	V
71	SNORKEL LIFTING CLAMP ASSY 338	U
72	BRAKE LINING	T
~~73~~	~~E&E SUPPORT BAR~~	~~T~~
74	ASSY 330 – BPS-16 RADAR MAST FIXTURES	T
75	PARTS AND MATERIAL LIST	V
76	REVISIONS	S
77	REVISIONS	T
78	REVISIONS	T
79	REVISIONS	U
80	REVISIONS	V
81	PARTS AND MATERIAL LIST	V
82	ASSY 357 – MAST CLAMP	V
83	MANDREL, PUSH RING, CUSHION AND NAMEPLATE	V
84	REVISIONS	V
85	REVISIONS	V

	SIZE	CAGE NO.	WT GRP	NAVSEA DRAWING NO.	REV
INDEX	B	53711	904	4398614	V
	SCALE – NONE			SHEET 2	

REFERENCES

NO.	TITLE	CODE IDENT	NUMBER
~~1~~	~~UHF/IFF ANT PACKAGE PRE INSTL PLANNING DATA~~		~~SS 522 2477187~~
~~2~~	~~D/F ANT PACKAGE PRE INSTL PLANNING DATA~~		~~SS 522 2477185~~
~~3~~	~~AS 949/BPX ANT PACKAGE PRE INSTL PLANNING DATA~~		~~SS 404 2477172~~
~~4~~	~~AN/BRN 3 ANT PACKAGE PRE INSTL PLANNING DATA~~		~~SS 522 2477211~~
~~5~~	~~AN/BRQ 19 SONAR, SUB INSTL STD TOP DWG~~		~~SS 412 1971437~~
~~6~~	~~AN/BRA 9 ANT PACKAGE PRE INSTL PLANNING DATA~~		~~SS 404 2477189~~
~~7~~	~~AN/BRA 15 ANT PACKAGE PRE INSTL PLANNING DATA~~		~~SS 404 2477205~~
~~8~~	~~AN/BRA 19 ANT PACKAGE PRE INSTL PLANNING DATA~~		~~SS 404 2477186~~
~~9~~	~~AN/BRA 21 ANT PACKAGE PRE INSTL PLANNING DATA~~		~~SS 404 2477249~~
~~10~~	~~AN/BRA 11 ANT PACKAGE PRE INSTL PLANNING DATA~~		~~SS 404 2477171~~
~~11~~	~~AN/BRA 31 ANT PACKAGE PRE INSTL PLANNING DATA~~		~~SS 445 4398585~~
~~12~~	~~ECM D/F ANT MAST FAIRING ASSEMBLY AND DETAILS~~		~~SS 128 2477167~~
~~13~~	~~ECM D/F ANT MAST FAIRING ASSEMBLY AND DETAILS~~		~~SS 128 2477168~~
~~14~~	~~ECM D/F ANT MAST FAIRING ASSEMBLY AND DETAILS~~		~~SS 128 2477169~~
~~15~~	~~ECM D/F ANT MAST FAIRING ASSEMBLY AND DETAILS~~		~~SS 128 2477217~~
~~16~~	~~AN/BRA 34 ANT PACKAGE PRE INSTL PLANNING DATA~~		~~SS 445 4398594~~
17	AN/BRD-7 ANT PACKAGE PRE-INSTL PLANNING DATA		SS-445-4398605
~~18~~	~~AN/BRD 7 MAST ASSEMBLY~~		~~SSN594 522 4398214~~
~~19~~	~~613 CLASS RDF ANT SPECIFIC DETAILS & ARR IN SHIP~~		~~SSN613 445 4398608~~
~~20~~	~~AN/BRA 23 MAST CONTOUR & INTERNAL BEARING~~		~~ITT DWG 2415507~~
~~21~~	~~AN/BRA 23 CENTER MAST~~		~~ITT DWG 2415586~~
22	OE-207/BR INSTALLATION STD, TOP DRAWING		SSBN726-445-4491191
~~23~~	~~IFF UHF ANTENNA STREAMLINED MAST DETAILS~~		~~SSN613 522 2102927~~
~~24~~	~~BRD ANTENNA MAST DETAILS~~		~~SSN613 522 2015447~~
25	PERISCOPE TECHNICAL MANUAL		AS APPROPRIATE
26	OPN & MAINT INSTR FOR AN/BRD-7 ANT MAST ASSY		NAVSEA 0967-533-5010
~~27~~	~~TECH MANUAL FOR ANT ASSY AS 2591 (V)BLA 4 (V) (U)~~		~~NAVSEA 0967 315 5010~~
~~28~~	~~SSN 637 SNORKEL INDUCTION MAST DETAILS~~		~~SSN637 501 2143842~~
~~29~~	~~SNORKEL IND & EXHAUST MAST~~		~~SSN585 501 1715139~~
~~30~~	~~VLF LOOP ANTENNA MAST FAIRING~~		~~SS 522 2113448~~
31	SSN 688 SNORKEL INDUCTION MAST DETAILS SHEET NO. 1		501-4457337
32	SHIPPING CONTAINER FOR AN/BRD-7 ANTENNA SYSTEM		084-5361557
33	SAF REQTS FOR ATH LIFTING & BACKUP CLAMPS TO MASTS		SE110-B3-MMA-010
~~34~~	~~SSN 604 PERISCOPE INDEPENDENT FAIRING DETS SHT NO. 1~~		~~SSN604 400 4320385~~
~~35~~	~~SSBN 616 SNORKEL INDUCTION & EXH MAST DET SHT NO. 1~~		~~SSBN616 501 2005419~~

REFERENCES

NO.	TITLE	CODE IDENT	NUMBER
36	SSBN 726 SNORKEL MAST LIFTING CLAMP		SSBN726-845-4862815
~~37~~	~~SSN 637 SNORKEL INDUCTION MAST DETAILS SHEET NO. 1~~		~~SSN678 501 4362593~~
~~38~~	~~SUBMARINE INDUCTION MAST DETAILS~~		~~SSN613 204 2015651~~
39	PERISCOPE HANDLING STRONGBACK		AS 31-521-2286748
40	HINGE CARRIAGE FOR PERISCOPE HANDLING ASSEMBLY		425-5611357
41	AN/BRD-7, AN/BLD-1 LIFTING RIG ASSEMBLY		906-5361738
42	IND MAST FRG & IND TUBES DET		SS-501-4675662
43	AN/BRD-7, AN/BLD-1 MAST INSTALLATION ASSEMBLY & DETAILS		SS-451-4491212
44	ESM ANTENNA MAST ARRANGEMENT IN SHIP AN/BLD-1, AN/BRD-7		SS-585-6404843
45	SNORKEL INDUCTION MAST ARRANGEMENT IN SHIP		SS-512-6404846
46	MULTI-PURPOSE ANTENNA NO. 1 AND NO. 2 ARRANGEMENT IN SHIP		SS-585-6404842
47	PERISCOPE NO. 1 ARRANGEMENT IN SHIP		SS-585-6404836
48	PERISCOPE NO. 2 ARRANGEMENT IN SHIP		SS-585-6404837
49	NAVIGATION RADAR ANTENNA ARRANGEMENT IN SHIP		SS-585-6404838
50	AN/BRA-34, OE-538 ANT INSTALLATION STD TOP DRAWING		SS-445-4398595
51	OE-207/BR INSTALLATION STD TOP DRAWING		SS-445-4491191
52	NAVSAT ANTENNA ARRANGEMENT IN SHIP		NAVSEA DWG 4677494
53	AN/BPS-16 (UNIT 6) RADAR MAST (688/751 CLASS)		53711-6912274
54	AN/BPS-16 (UNIT 6) RADAR MAST (726 CLASS)		53711-6912277
55	AN/BPS-16 (UNIT 6) RADAR MAST (SSN 21 CLASS)		53711-6912279
56	688 CLASS SNORKEL CYLINDER LIFTING DEVICE		128-7613255
57	PROCEDURE FOR MAINTENANCE & REPAIR OF THE TRIDENT SNORKEL INDUCTION MAST SYSTEM		NAVSEA 0900-LP-018-0090
58	688 CLASS PERISCOPE FAIRING CYLINDER LIFTING DEVICE		NAVSEA DWG 906-7556877
59	FAIRED MAST RIGGING HARDWARE & SAFETY STOP		NAVSEA DWG 125-7094237
60	SSN 774 SNORKEL INDUCTION MAST ASSEMBLY & DETAILS		NAVSEA DWG 342-7067317
61	PERISCOPE FAIRING HOIST CYLINDER INSTALLATION SAFETY FIXTURE		NAVSEA DWG 7487090
62	LIFTING EYE, TYPE 18		KOLLMORGEN DWG 051716
63	LIFTING EYE, TYPE 8		KOLLMORGEN DWG 056629
64	TYPE 18 PERISCOPE SET WITH ADF/SUBIS; INSTALLATION & CHECKOUT PROCEDURE		S9425-AE-PRO-010
65	TYPE 18H MOD 1, SUBMARINE PERISCOPE SET		S9425-CH-IEM-010
66	TYPE 8B/J MOD 3 (EHF SATCOM) PERISCOPE SET		S9425-BY-IEM-A10

REFERENCES

SIZE	CAGE NO.	WT GRP	NAVSEA DRAWING NO.	REV
B	53711	904	4398614	V
SCALE - NONE			SHEET 3	

SYSTEM INDEX

LINE NO.	FOR THIS ANT/MAST SYSTEM	USE THIS LIFTING DEVICE	SHOWN IN THIS DWG ON SHEETS	MAST OUTER	MAST INNER	RADOME	SHAPE FAIRED MAJOR AXIS	SHAPE FAIRED MINOR AXIS	CYL DIA
~~1~~	~~BQR-19~~	~~4~~	~~20, 25~~		~~X~~		~~12~~	~~6~~	
~~2~~	~~BQR-19~~	~~2~~	~~20, 24~~	~~X~~			~~26.56~~	~~10.62~~	
~~3~~	~~BRA-9~~	~~2~~	~~20, 24~~	~~X~~			~~26.56~~	~~10.62~~	
~~4~~	~~BRA-19~~	~~2~~	~~20, 24~~	~~X~~			~~26.56~~	~~10.62~~	
~~5~~	~~BRA-15~~	~~2~~	~~20, 24~~	~~X~~			~~26.56~~	~~10.62~~	
~~6~~	~~BRA-21~~	~~2~~	~~20, 24~~	~~X~~			~~26.56~~	~~10.62~~	
~~7~~	~~BRA-34~~	~~6~~	~~20, 25~~			~~X~~	~~12.50~~	~~8.00~~	
~~8~~	~~BRA-34~~	~~2~~	~~20, 24~~	~~X~~			~~26.56~~	~~10.62~~	
9	AN/BRR6 OR 6B	161	36	BUOY					
~~10~~	~~BRA-7 OR 8~~	~~81~~	~~32~~	~~BUOY~~					
11	BRD-7	4	20, 25		X		12.00	6	
12	BRD-7	2	20, 24	X			26.56	10.62	
~~13~~	~~IDFS/BRD-7~~	~~2~~	~~20, 24~~	~~X~~			~~26.56~~	~~10.62~~	
14	BRD-7	55	REF (32)			X			18.82
15	~~BRN-3~~ NAVSAT	2	20, 24	X			26.56	10.62	
~~16~~	~~AS-2591~~	~~77~~	~~31~~	~~STACK~~					
~~17~~	~~ESM~~	~~49~~	~~22, 26~~	~~X~~			~~26.56~~	~~10.62~~	
~~18~~	~~AS-1653 OR AS-3327~~	~~31, 32~~	~~31~~	~~STACK~~					
~~19~~	~~AN/BRA-4~~	~~121~~	~~33, 34~~						
~~20~~	~~UHF/IFF~~	~~1~~	~~20, 24~~	~~X~~			~~22.31~~	~~8.94~~	
~~21~~	~~UHF/IFF~~	~~2~~	~~20, 24~~	~~X~~			~~26.56~~	~~10.62~~	
~~22~~	~~OE-158~~	~~2~~	~~20, 24~~	~~X~~			~~26.56~~	~~10.62~~	
~~23~~	~~OE-158~~	~~1~~	~~20, 24~~	~~X~~			~~22.31~~	~~8.94~~	
~~24~~	~~VLF~~	~~2~~	~~20, 24~~	~~X~~			~~26.56~~	~~10.62~~	
25	OE-207	2	20, 24	X			26.56	10.62	
26	OE-207	6	20, 25			X	12.50	8.00	
~~27~~	~~RDR ANT~~	~~50~~	~~22, 25~~	~~X~~					~~7.50~~
28	BPS-15 RDR	51	22, 25	X					3.00
29	PERISCOPE	47	21, 25		X				7.50
30	PERISCOPE	2	20, 24	X			26.56	10.62	
~~31~~	~~PERISCOPE~~	~~1~~	~~20, 24~~	~~X~~			~~22.31~~	~~8.94~~	

SYSTEM INDEX

LINE NO.	FOR THIS ANT/MAST SYSTEM	USE THIS LIFTING DEVICE	SHOWN IN THIS DWG ON SHEETS	MAST OUTER	MAST INNER	RADOME	SHAPE FAIRED MAJOR AXIS	SHAPE FAIRED MINOR AXIS	CYL DIA
32	SNORKEL	201	REF (36)	X			50.00	23.50	
~~33~~	~~SNORKEL~~	~~48~~	~~21, 27~~	~~X~~			~~31~~	~~14.50~~	
~~34~~	~~SNORKEL~~	~~52~~	~~22, 27~~	~~X~~			~~36.68~~	~~18.50~~	
~~35~~	~~SNORKEL~~	~~202~~	~~23, 28~~	~~X~~			~~50.00~~	~~23.50~~	
~~36~~	~~PERISCOPE~~	~~226~~	~~39~~						~~13.00~~
37	PERISCOPE	232	40						9.50
~~38~~	~~SNORKEL~~	~~93~~	~~22, 27~~	~~X~~			~~29.75~~	~~14.50~~	
~~39~~	~~AN/BPS-15~~	~~105~~	~~42~~						~~16.75~~
~~40~~	~~SNORKEL~~	~~157~~	~~43~~						
~~41~~	~~ESM~~	~~21~~	~~25~~		~~X~~				
42	PERISCOPE	267	48	X					
43	BLD-1	2,297	20, 24, 47	X			26.25	10.62	
44	SNORKEL	309	53, 54	X			50.00	23.50	
45	BPS-16 RDR	330	56, 74		X				5.00
46	SNORKEL	325	55		X		~~37.00~~	~~19.00~~	~~16.5~~
47	SNORKEL	338	71	X			36.68	17.88	
48	PERISCOPE	348	20, 24	X			26.56	10.62	
49	SNORKEL	334	23, 27	X			36.99	19.00	
~~50~~	~~SNORKEL~~	~~336~~	~~23, 25~~						~~16.5~~
51	OE-538	6	20, 25			X	12.50	8.00	
52	OE-538	2	20, 24	X			26.56	10.62	
53	BPS-16 RDR	370	21, 25	X					7.75
54	OE-592	6	20, 25			X	12.50	8.00	
55	OE-592	2	20, 24	X			26.56	10.62	
56	PERISCOPE	382	REF (58)						4.50
57	HOIST CYLINDER	298	35						
58	SNORKEL	377	REF (56)						X
59	SNORKEL	381	REF (57)		X				
60	BPS-16 RDR	391	56		X				5.00
61	BPS-16 RDR	399	82		X				5.00
62									

SYSTEM INDEX

LINE NO.	FOR THIS ANT/MAST SYSTEM	USE THIS LIFTING DEVICE	SHOWN IN THIS DWG ON SHEETS	MAST OUTER	MAST INNER	RADOME	SHAPE FAIRED MAJOR AXIS	SHAPE FAIRED MINOR AXIS	CYL DIA
63									
64									
65									
66									
67									
68									
69									
70									
71									
72									
73									
74									
75									
76									
77									
78									
79									
80									
81									
82									
83									
84									
85									
86									
87									
88									
89									
90									
91									
92									
93									

INDEX: BY ANTENNA/MAST SYSTEM

SIZE	CAGE NO.	WT GRP	NAVSEA DRAWING NO.	REV
B	53711	904	4398614	V
SCALE – NONE			SHEET 4	

1. THIS DRAWING SUPERSEDES NAVSHIPS DRAWINGS SS-904-2113426, SS-904-2113446, AND SS-904-2113494. PROPERLY INSTALLED CLAMPS ARE DESIGNED AND TESTED TO SAFELY LIFT COMPLETELY ASSEMBLED UNITS WITH ALL NORMALLY INSTALLED INTERNALS (INNER BEARINGS, HOIST CYLINDER, RADOME, SHEAVES, CABLES, ETC.). INSTALLATION INSTRUCTIONS ARE GIVEN ON REFERENCE 33.

2. SUBSTITUTION OF MATERIAL IS NOT PERMISSIBLE WITHOUT FORMAL WRITTEN AUTHORITY BY THE DESIGN ACTIVITY GENERATING THIS DRAWING.

3. B-20 / A-24 { ALL DETAILS, SECTIONS, TABLES, ETC. ARE IDENTIFIED BY LABELS SUCH AS B-20 (DETAIL B ON SHEET 20) / SUB LABELS REFER TO RELATED VIEWS, TABLES, ETC. SUCH AS A-24 (VIEW A ON SHEET 24).

4. MARKING AND IDENTIFICATION SHALL BE IN ACCORDANCE WITH MIL-STD-130.

5. HAND STAMP ITEMS 65, 66, 302, 350 AND 407 AS INDICATED BY THE HEADING OF THE APPLICABLE DIMENSIONAL TABLE, SUCH AS A-20. THIS SYMBOL "■ ■" INDICATES THE SERIAL NUMBER THAT IS ASSIGNED BY THE PROCUREMENT CONTRACT.

6. ALL WELDS (EXCEPT ALUMINUM WELDS) SHOULD BE CLASSIFIED AS S9074-AR-GIB-010/278, CLASS M2, CATEGORY A. USE PT FOR ALUMINUM WELDS. ALL WELDS ARE INSPECTED AS REQUIRED BY THE FOLLOWING SPECIFICATIONS:
   (A) NAVSEA T9074-AS-GIB-010/271 REQUIREMENTS FOR NON-DESTRUCTIVE TESTING METHOD.
   (B) MIL-STD-2035 NON-DESTRUCTIVE TESTING ACCEPTANCE CRITERIA.

   WELDERS SHALL BE QUALIFIED IN ACCORDANCE WITH S9074-AQ-GIB-010/248, WELDING AND BRAZING PROCEDURE AND PERFORMANCE QUALIFICATION.

   NO LINEAR INDICATIONS OR CRACKS ARE ALLOWED.

7. SINK HEADS OF RIVETS .03" MINIMUM BELOW SURFACE OF LINING.

8. ALL DIMENSIONS ARE IN INCHES UNLESS OTHERWISE SPECIFIED.

9. ALL FEATURES ARE SYMMETRICAL ABOUT CENTERLINES UNLESS OTHERWISE INDICATED.

~~10. IT IS RECOMMENDED THAT THE SAFETY STRAP BE WOVEN NYLON TEXTILE WEBBING IN ACCORDANCE WITH MIL-W-4088, FSN 8305-782-2751. ONE END OF THE WEBBING TO HAVE TWO HARNESS "D" RINGS, MANUFACTURED IN ACCORDANCE WITH MS-22046, FSN 5365-360-0467, SECURELY STITCHED IN ACCORDANCE WITH FED-STD-751, TYPE 301, SIX STITCHES PER INCH, "WW" STITCH. STITCHING TO BE NYLON IN ACCORDANCE WITH MIL-T-7807. THE OTHER END OF THE WEBBING TO BE STITCHED SUFFICIENTLY TO PREVENT FRAYING OF THE WEBBING.~~

11. WHERE THIS NOTE IS REFERENCED, THE ITEM IS SUPPLIED BY AMERICAN HOIST AND DERRICK COMPANY, CROSBY-LAUGHLIN DIVISION, P.O. BOX 226, WOODBRIDGE, NEW JERSEY, 07075; ~~PART NUMBER G-341 OF CATALOG NUMBER 950-3A, PAGE 6.~~ A-341, STOCK SIZE 5/8.

~~12. LOCATE CAUTION PLATE NEAR LIFTING EYE WHERE SHOWN IN VIEWS D-31 AND E-31.~~

13. TESTING OF CLAMPS IS SPECIFIED IN THIS DRAWING. TESTING WEIGHTS AND METHODS FOR OTHER LIFTING DEVICES SHALL BE AS INDICATED ON THE APPROPRIATE DETAIL TO SIMULATE ACTUAL CONDITIONS.

~~14. ELEVATE THE PERISCOPE HYDRAULICALLY UNTIL THE EYEPIECE IS APPROXIMATELY CHEST HIGH. CLEAN THE PERISCOPE BARREL CLAMPING AREA, IMMEDIATELY ABOVE THE FAIRWATER, WITH ITEM 119 OR 120. ATTACH CLAMPS, SAFETY LINE AND LIFTING SLING WITH SPREADER BAR AS SPECIFIED IN REF 33. REFER TO APPLICABLE SHIPS DRAWING AND REFERENCE 25 FOR HYDRAULIC DISCONNECTS PRIOR TO LIFTING.~~

~~15. FOR THE SAFETY OF PERSONNEL, WHILE WORKING ON INSTALLED MASTS THAT ARE NOT TO BE REMOVED FROM THE SAIL, SEE REFERENCE 33.~~

~~16. ITEM 121 ASSEMBLY AND DETAILS INSTALLATION AIDS DEVELOPED FOR USE IN THE INSTALLATION OR REMOVAL OF THE AS/1653 AND AS/3327 STACK. ITEMS 24 AND 32 ARE NOT USED IN ASSEMBLY 121.~~

~~17. MAST CLAMP, ITEM 130, MUST BE MODIFIED BY REMOVING THE FORWARD AND AFT LIFTING LUGS AND REPLACING THEM WITH ITEMS 131 AND 132.~~

18. NO WEIGHT TEST IS REQUIRED FOR THE SPREADER BAR ASSEMBLIES 69 AND 281.

19. ID NO. (IDENTIFICATION NUMBER): THE ID NO. SHALL BE PERMANENTLY INSCRIBED IN THE AREA INDICATED ON ITEMS 65, 66, 302 AND 350. THE ID NO. SHALL CONSIST OF THREE PARTS AS IN THE FOLLOWING EXAMPLE: 4398614 -■-■. PART ONE IS THE LAST SEVEN DIGITS OF THE DRAWING NUMBER. PART TWO "■" IS THE REVISION LETTER AND PART THREE "■" IS THE ITEM NUMBER. THE CODE IDENT NUMBER, "CIN53711", SHALL ALSO BE INSCRIBED WHERE INDICATED.

20. THE RAYMARK M-9010-1 MATERIAL IS TO BE BONDED TO THE UNPAINTED CLAMP HALVES USING SCOTCH-WELD 2216 B/A GRAY, ~~IF~~ RAYCO R-81007, OR R-86025 ADHESIVE ~~IS NOT AVAILABLE.~~

21. LETTERS ON LABEL PLATES, ITEMS 65, 66, 302 AND 350 SHALL BE ENGRAVED .16 HIGH BY .09 WIDE AND BE CENTRALLY LOCATED.

22. USE ITEM 112 WEIGHT FIXTURE FOR THE WEIGHT TEST OF ASSEMBLIES ~~48, 52 AND 93~~ 334 AND 338 (~~637 AND~~ 688, 21 AND 774 CLASS SUBMARINE SNORKELS).

CONTD ON SHEET 6

GENERAL NOTES

SIZE	CAGE NO.	WT GRP	NAVSEA DRAWING NO.	REV
B	53711	904	4398614	V
SCALE - NONE			SHEET 5	

CONTD FROM SHEET 5

23. ALL LINING BRAKE EDGES SHOULD BE ROUNDED TO .06".

24. SERIALIZE THE LIFTING BAR AND SHACKLE BY VIBRO-ETCHING TO FACILITATE RECORD KEEPING OF INSPECTION AND TESTING.

25. ASSY. 185 APPLIES TO ALL SHIPS AND FACILITIES WITH THE EXCEPTION OF ~~THE USS HOLLAND, USS HUNLEY, AND~~ TRF - KINGS BAY GEORGIA, ~~THE FACILITY~~ SHALL USE THIS ASSEMBLY ~~(E-38)~~ EXCEPT THAT THE OVERALL LENGTH SHALL BE BETWEEN 75'-0" AND 100'-0" VICE 100'-0" ± 0'-1/2".

26. IN CLAMP DIMENSIONAL TABLES, THE TOLERANCE FOR NUMERICAL STATIONS IS .063".

27. PAINT EXTERIOR SURFACES EXCEPT THOSE MARKED "NP" WITH ONE COAT OF PRIMER PER MIL-DTL-24441/20, AND TWO COATS OF PAINT PER MIL-DTL-24441/21.

28. DIMENSIONS MARKED THRU TO BE MACHINED WITH CLAMP HALVES CLAMPED TOGETHER.

29. SILKSCREEN STRAPS AS INDICATED USING 56232-(M695791-7) INK, MARKING, MIL-I-43553 (MI), FED-STD-595 NO. 13655 (F NO. 734, YELLOW, 56232-P695852-7, 95-203-78).

30. NO. 10 (ø.194) DRILL HOLES THRU CLAMPS.

31. ALL TAPPED HOLES IN PC'S 317 AND 318 TO HAVE HELICOIL INSERTS PC'S 319 AND 320.

~~32. TEMPLATE HOLE LOCATIONS IN PC'S 322 AND 323 FROM PC'S 317 AND 318.~~

33. INSTALL PC'S 317 AND 318 SO THAT THEY WILL REST ON THE HORSE COLLAR BEARING FRAME WITH THE NOTCH CLEARING IN BEARING CAP AS SHOWN IN F-54. LUBE BOLTS WITH FEL-PRO C5-A AND TORQUE TO 40-45 FOOT POUNDS. PC'S 317 AND 318 MAY ALSO BE USED WITH PC'S 310 AND 311 AS SHOWN IN C-54. TORQUE TO BE ACCOMPLISHED IN TWO INCREMENTS.

~~34. AN ACCEPTABLE ALTERNATE METHOD OF FABRICATION OF PC 322 IS TO WELD TWO PIECES OF 1 1/2 X 6 X 24 STEEL PLATES TOGETHER. USE A 1/2 INCH BEVEL WELD AND GRIND SMOOTH AFTER WELDING.~~

35. MANUFACTURE ~~PC 323~~ IAW REF (42) NOTE 17.

36. MEASURE GAP BETWEEN THE LIFTING BLOCKS (PC'S 317 AND 318) AND SUPPORT LEGS (PC'S 310 AND 311) AND SHIM AS REQUIRED TO ACHIEVE SOLID CONTACT BETWEEN LIFTING BLOCKS AND SUPPORT LEGS. THIS IS TO BE ACCOMPLISHED EACH TIME THE SUPPORT LEGS ARE USED.

37. ASSY'S ~~42,~~ 47, ~~50 &~~ 51 & 370 LABEL PLATES SHALL BE INSTALLED ON THE LIFTING LUGS (14). THE PLATES SHALL BE LOCATED AS FAR AS POSSIBLE FROM THE LIFTING LUG HOLE.

38. ALL LIFTING DEVICES NEED TO BE TESTED EVERY FOUR YEARS BASED ON THE IN SERVICE DATE, NOT THE TEST DATE ON THE LABEL PLATE. IN SERVICE DATE IS THE DATE WHICH THE LIFTING DEVICE IS USED FOR THE FIRST TIME. THE USER SHOULD HAVE A LOG BOOK TO RECORD THE IN SERVICE DATE AND TEST DATES FOR ALL DEVICES.

39. THIS DEVICE IS USED TO LIFT PERISCOPE BARREL ONLY.

40. WHERE THIS NOTE IS REFERENCED, ITEM IS UNIQUE DESIGN AVAILABLE FROM:
    NORTHROP GRUMMAN SYS CORP. (SPERRY MARINE)
    1070 SEMINOLE TRAIL
    CHARLOTTESVILLE, VA 22901-2891
    (CAGE CODE 03956)
    TELE: 434-794-2366
    http://www.sperrymarine.northropgrumman.com

~~41. IF THE BRACKET (PC 372 OR 373) HAS AN OVERLAP WITH THE GUSSET'S WELD THEN THE END USER IS ALLOWED TO MACHINE THE BRACKET TO CLEAR THE INTERFERENCE. RETESTING AND RECERTIFYING ARE REQUIRED FOR THE MODIFIED BRACKET.~~

~~42. BRACKET BEND (PCS 372 & 373) SHALL BE INSTALLED SUCH THAT BOTH EARS FACE TOWARD THE CENTER OF THE LIFTING CLAMP.~~

~~43. TORQUE BOLTS, ITEM 374, TO 5-10 FT-LBS.~~

~~44. CONDUCT STATIC OVERLOAD TEST AT 3,000 LBS AT INTERVALS NOT TO EXCEED 4 YEARS. MT WELDS BEFORE AND AFTER TEST.~~

45. FOR PERISCOPES WITH FIELD CHANGE C-88-2-013, LENGTH OF SLING, ASSEMBLY 389, SHALL BE 6 FT LONG TO ENSURE THE SLIDING CLAMP, ASSEMBLY 232, IS POSITIONED AT THE MIDPOINT OF THE SLEEVE BEARING WHEN INSTALLING / REMOVING THE PERISCOPE.

46. INSTALL TYPE 18B/H AND 8B/J E&E SUPPORT BARS AND LIFTING EYES IN ACCORDANCE WITH REF 64-66 AS APPLICABLE. IN CASES OF CONFLICTING REQUIREMENTS, REF 64-66 SHALL GOVERN.

47. CHEMICAL FILM FINISH TO BE IAW MIL-DTL-5541, CL 1A.

48. NAME PLATE SHALL BE BLACK LETTERING ON ALUMINUM BACKGROUND BY PHOTO-ETCH PROCESS.

49. MAKE CUT AFTER MACHINING, SEE VIEW A-82.

GENERAL NOTES CONTINUED	SIZE	CAGE NO.	WT GRP	NAVSEA DRAWING NO.	REV
	B	53711	904	4398614	V
	SCALE - NONE			SHEET 6	

LIST OF PARTS FOR ONE ASSEMBLY

REV	ITEM NO.	QTY REQD	DESCRIPTION	MATERIAL SPECIFICATIONS	MATERIAL REQUIRED	NSN OR MANUF PART NO.	REMARKS	ZONE
P	~~1~~	~~1~~	~~ASSEMBLY 1, LIFTING CLAMP~~	~~→~~	~~→~~	~~3940-01-134-9604~~	~~C/O PC'S 9, 10, 14, 15, 18, 22, 24-26 & 60 OF 616265, DIM & STAMP IAW A-20 & NOTES 5, 19 & 21~~	~~A-20~~
V	2	1	ASSEMBLY 2, LIFTING CLAMP	→	→	3940-01-133-5606	C/O PC'S 9, 10, 14, 15, 22, 24-26, 2 OF 60, 4 OF 61, 62, 66 DIM & STAMP IAW B-20 & NOTES 5, 19 AND 21	B-20
P	3	–	–	–	–	–	–	–
V	4	1	ASSEMBLY 4, LIFTING CLAMP	→	→	6240-01-133-5605	C/O PC'S 9, 10, 14, 15, 22, 24-26, 2 OF 59, 62, 65 DIM & STAMP IAW C-20 & NOTES 5, 19 AND 21	C-20
P	5	–	–	–	–	–	–	–
V	6	1	ASSEMBLY 6, LIFTING CLAMP	→	→	6240-01-133-5604	C/O PC'S 9, 10, 14, 15, 22, 24-26, 59, 60 AND 2 OF 61 DIM & STAMP IAW D-20 & NOTES 5, 19 AND 21	D-20
P	7-8	–	–	–	–	–	–	–
R	9	1	CLAMP HALF, FORWARD, 3/8 FB	MIL-S-22698	STEEL	–	TY 1, CL A – ALT MAT'L ASTM-A36/A36M	B-24
R	10	1	CLAMP HALF, AFT, 3/8 FB	MIL-S-22698	STEEL	–	TY 1, CL A – ALT MAT'L ASTM-A36/A36M	B-24
T	11-13	–	–	–	–	–	–	–
R	14	2	LUG, LIFTING, 1/2 FB	MIL-S-22698	STEEL	–	TY 1, CL A – ALT MAT'L ASTM-A36/A36M	VAR
R	15	4	GUSSET, 3/8 PL	MIL-S-22698	STEEL	–	TY 1, CL A – ALT MAT'L ASTM-A36/A36M	A-24
V	16	2	GUSSET, 1/2 PL	MIL-S-22698	STEEL	–	TY 1, CL A – ALT MAT'L ASTM-A36/A36M	A-27
V	17	2	GUSSET, 1/2 PL	MIL-S-22698	STEEL	–	TY 1, CL A – ALT MAT'L ASTM-A36/A36M	A-27
P	18	2	SPACER	COML	STEEL	–	ASTM-A-36	C-29
P	19-20	–	–	–	–	–	–	–
T	~~21~~	~~1~~	~~ASSEMBLY 21, LIFTING CLAMP~~	~~→~~	~~→~~		~~C/O PC'S 14, 22, 24, 25, 26, 35, 36, 60, 62, DIM & STAMP IAW A-21 & NOTES 5, 8, 19 AND 21~~	~~A-21~~
U	22	A/R	RIVET, 3/16 DIA X 7/8 LG	NASM 20613-6P14	STEEL	5320-00-051-8611	SOLID UNIV HD, NOTE 7	VAR
U	23	A/R	RIVET, BLIND 3/16 DIA X 1 LG	NASM 20613-6P16	STEEL	5320-00-068-6928	SELF PLUGGING SHANK UNIV HD, NOTE 7	VAR
V	24	→	BOLT, HEX HD, 5/8-11 UNC-2A X 3 LG	NASM 90725-168	STEEL	5305-00-724-5914	4 U/W PC'S 2, 4, 6, ~~42,~~ 47, ~~50~~ & 51; 3 U/W PC 32	VAR
P	25	→	NUT, PLAIN, HEX 5/8-11 UNC-2B	MS16285-7	STEEL	5310-00-840-5872	UNCOATED SEMI-FIN, SEE APPLICABLE ASSEMBLY FOR QTY	VAR
P	26	→	WASHER, FLAT, 5/8 MED	MS27183-21	STEEL	5310-00-003-9174	SEE APPLICABLE ASSEMBLY FOR QTY	VAR
V	27	–	BOLT, HEX HD, 1-8 UNC-2A X 3 3/4 LG	MS90728-237	STEEL	5305-00-276-5739	4 U/W ~~48, 49, 52,~~ 334	A-27
V	28	–	NUT, PLAIN HEX, 1-8 UNC-2B	MIL-S-1222	STEEL	5310-00-208-6873	TYPE 1, 4 U/W ~~48, 49, 52,~~ 334	A-27

SIZE	CAGE NO.	WT GRP	NAVSEA DRAWING NO.	REV
B	53711	904	4398614	V
SCALE – NONE			SHEET 7	

LIST OF PARTS FOR ONE ASSEMBLY (CONTD)

REV	ITEM NO.	QTY REQD	DESCRIPTION	MATERIAL SPECIFICATIONS	MATERIAL REQUIRED	NSN OR MANUF PART NO.	REMARKS	ZONE
V	29	–	WASHER, FLAT, 1.000 MED	FF–W–92	STEEL	5310–01–143–6562	TYPE A, GR 1, CL A, 8 U/W ~~48, 49, 52,~~ 334, ~~1 U/W 157~~	A–27
V	30	–	WASHER, LOCK, 1.000	NASM 35338–53	STEEL	5310–00–584–7889	4 U/W ~~48, 49, 52,~~ 334	A–27
T	~~31~~	~~2~~	~~BOLT, EYE SHOULDER~~	~~MS51937–5~~	~~STEEL~~	~~5306–00–050–0347~~	~~U/W AS 1653 OR AS 3327 STACK ONLY DURING INSTALLATION~~	~~E–31~~
T	~~32~~	~~3~~	~~BLOCK, SAFETY~~	~~MIL–S–22698~~	~~STEEL~~	~~2040–01–118–2178~~	~~TY 1, CL B, U/W AS 1653 OR AS 3327 STACK ONLY DURING INSTALLATION, ALTERNATE MATL ASTM/A36/A36M~~	~~F–31~~
R	33	2	CLAMP HALF, 3/8 PL	MIL–S–22698	STEEL	–	TY 1, CL A, ALTERNATE MATERIAL ASTM A36/A36M	B–25
R	34	4	GUSSET, 3/8 PL	MIL–S–22698	STEEL	–	TY 1, CL A, ALTERNATE MATERIAL ASTM A36/A36M	B–25
R	35	2	CLAMP, HALF, 1/2 PL	MIL–S–22698	STEEL	–	TY 1, CL A, ALTERNATE MATERIAL ASTM A36/A36M	B–25
R	36	4	GUSSET, 1/2 PL	MIL–S–22698	STEEL	–	TY 1, CL A, ALTERNATE MATERIAL ASTM A36/A36M	B–25
P	~~37~~	~~A/R~~	~~RIVET, 3/16 DIA X 1 LG~~	~~MS20613–6P16~~	~~STEEL~~	~~5320–00–068–6928~~	~~SOLID UNIV HD~~	~~A–28~~
P	38	A/R	ZINC CHROMATE PRIMER	TT–P–645	PAINT	8010–00–161–7419	NOTE 27	–
V	39	A/R	HAZE GRAY	MIL–PRF–24635	PAINT	8010–01–312–4061	NOTE 27	–
P	40	→	SCREW, DRIVE, #4 X 1/4 LG	MS21318–21	STEEL	5305–00–253–5615	TYPE U, CD PL, 8U/W65, 8U/W66, 8U/W11	A–44
P	41	–	–	–	–	–	–	–
T	~~42~~	~~1~~	~~ASSEMBLY 42, LIFT CLAMP~~	~~→~~	~~→~~	~~6240–01–134–9614~~	~~C/O PC'S 14, 22, 24, 25, 26, 33, 34, 60, 62 & 65, DIM & STAMP IAW D–21 & NOTES 5, 19, 21 AND 37~~	~~B–21~~
P	43–46	–	–	–	–	–	–	–
V	47	1	ASSEMBLY 47, LIFT CLAMP	→	→	3940–01–134–9611	C/O PC'S 14, 23, 24, 25, 26, 35, 36, 60, 62 & 65, DIM & STAMP IAW D–17 & NOTES 5, 19, 21 AND 37	C–21
P	~~48~~	~~1~~	~~ASSEMBLY 48, LIFT CLAMP~~	~~→~~	~~→~~	~~2040–01–134–9610~~	~~C/O PC'S 16, 17, 23, 27, 28, 29, 30, 53, 54, 62 & 65 DIM & STAMP IAW C–21 & NOTES 5, 19 AND 21~~	~~D–21~~
T	~~49~~	~~1~~	~~ASSEMBLY 49, LIFT CLAMP~~	~~→~~	~~→~~	~~2040–01–134–9609~~	~~C/O PC'S 16, 17, 23, 27, 28, 29, 30, 53, 54, 56, 62 & 65 DIM & STAMP IAW A–22 & NOTES 5, 19 AND 21~~	~~A–22~~
T	~~50~~	~~1~~	~~ASSEMBLY 50, LIFT CLAMP~~	~~→~~	~~→~~	~~6240–01–133–5607~~	~~C/O PC'S 14, 23, 24, 25, 26, 35, 36, 60, 62 & 65 DIM & STAMP IAW B–22 & NOTES 5, 19, 21 AND 37~~	~~B–22~~
V	51	1	ASSEMBLY 51, LIFT CLAMP	→	→	3940–01–134–9608	C/O PC'S 14, 22, ~~23,~~ 24, 25, 26, 33, 34, 60, 62 & 65 DIM & STAMP IAW C–22 & NOTES 5, 19, 21 AND 37	C–22
R	~~52~~	~~1~~	~~ASSEMBLY 52, LIFT CLAMP~~	~~→~~	~~→~~	~~2040–01–134–6782~~	~~C/O PC'S 16, 17, 23, 27, 28, 29, 30, 53, 54, 60, 62 & 65 DIM & STAMP IAW D–22 & NOTES 5, 19 AND 21~~	~~D–22~~
R	53	1	CLAMP HALF PORT, 1/2 FB	MIL–S–22698	STEEL	–	TY 1, CL A, ALTERNATE MATERIAL ASTM A36/A36M	A–26, A–27

SIZE	CAGE NO.	WT GRP	NAVSEA DRAWING NO.	REV
B	53711	904	4398614	V
SCALE – NONE			SHEET 8	

LIST OF PARTS FOR ONE ASSEMBLY (CONTD)

REV	ITEM NO.	QTY REQD	DESCRIPTION	MATERIAL SPECIFICATIONS	MATERIAL REQUIRED	NSN OR MANUF PART NO.	REMARKS	ZONE
V	54	1	CLAMP HALF STARBOARD, 1/2 FB	MIL-S-22698	STEEL	–	TYPE 1, CLASS A, ALTERNATE MATERIAL ASTM A36/A36M	~~A-26~~, A-27
P	55	1	HANDLING FRAME ASSY, ANT AN/BRD-7	→	→	2040-01-134-9607	ITEM 51 OF REF 32	–
T	~~56~~	~~2~~	~~PLATE, 1/2 FB~~	~~MIL-S-22698~~	~~STEEL~~		~~TYPE 1, CLASS A, ALTERNATE MATERIAL ASTM A36/A36M~~	~~B-26~~
P	57	–	–	–	–	–	–	–
T	~~58~~	~~8~~	~~THIMBLE – CLAMP FOR 1/4 DIA ROPE~~	~~COML~~	~~BRONZE~~		~~MC MASTER CARR – P/N 3467T16 OR EQUAL~~	~~VAR~~
U	59	→	LINING, BRAKE, 1/4 THK	COML	→	–	RAYMARK M-9010-1, DIM IAW F-29 – 1 U/W 6, 2 U/W 4 SEE NOTE 23	VAR
U	60	2	LINING, BRAKE, 1/4 THK	COML	→	–	RAYMARK M-9010-1, DIM IAW A-29 & D-29 SEE NOTE 23	VAR
U	61	→	LINING, BRAKE, 1/4 THK	COML	→	–	RAYMARK M-9010-1, DIM IAW B-30, 4 U/W 2, 4 & 6, 2 U/W 267 – SEE NOTE ~~20~~ 23	VAR
U	62	A/R	ADHESIVE	COML	→	–	~~SCOTCH WELD 2216 B/A GRAY~~ SEE NOTE 20	VAR
P	63	–	–	–	–	–	–	–
T	~~64~~	~~A/R~~	~~COATING, THREAD, TYPE VC 3~~	~~COML~~	→	~~8030-00-163-5792~~	~~AS SUPPLIED BY NYLOK, FSCM 04866~~	~~D-31~~
V	65	2	LABEL PLATE – .02 THK	COML	ALUMINUM	–	SEE NOTES 5, 19 & 21	A-44
V	66	2	LABEL PLATE – .02 THK	COML	ALUMINUM	–	SEE NOTES 5, 19 & 21	B-44
P	67-68	–	–	–	–	–	–	–
T	69	1	ASSEMBLY, SPREADER BAR	→	→	2040-01-134-9606	C/O PC'S 70, 71 & QTY 4 OF 79, SEE NOTE 18	A-31
V	70	1	PIPE – 2 1/2 NPT	ASTM-A-120	STEEL	–	WEIGHT A, CLASS 1	A-31
R	71	2	PLATE – 3/4 THK	MIL-S-22698	STEEL	–	TYPE 1, CLASS A, ALTERNATE MATERIAL ASTM A36/A36M	A-31
U	~~72~~	~~1~~	~~STRAP, SAFETY~~	→	~~NYLON~~		~~SEE NOTE 10~~	
P	73-74	–	–	–	–	–	–	–
T	~~75~~	→	~~SCREW, DRIVE – #4~~	~~MS21318-22~~	~~STEEL~~	~~5305-00-253-5616~~	~~2 U/W PC 76~~	~~E-31~~
T	~~76~~	~~2~~	~~CAUTION PLATE – .032 (20 GA)~~	~~QQ-A-250/1~~	~~AL ALY~~		~~MARKING TO BE/MIL-P-15024, TYPE II, SIZE 4, COLOR STYLE 4 – NOTE 12~~	~~E-31~~
T	~~77~~	~~4~~	~~ASSY 77, LIFTING SLING AS-2591 DLA-4~~	→	→	~~2040-01-134-9602~~	~~C/O PC'S 58, 75, 76 & 78-80~~	~~D-31~~
T	~~78~~	~~4~~	~~ROPE, WIRE – 1/4 DIA~~	~~RR-W-410~~	~~CRES~~	~~4010-00-184-9553~~	~~TYPE 1, CLASS 2, CONSTRUCTION II~~	~~D-31~~
P	79	–	SHACKLE, SCREW PIN – 5/8	RR-C-271	STEEL	4030-00-149-5574	4 U/W PC 69 & 77, 6 U/W PC 161, 1 U/W PC 330	VAR
T	~~80~~	→	~~BOLT, EYE SHOULDER – 1-8UNC-2A~~	~~MS51937-10~~	~~STEEL~~	~~5306-00-211-8002~~	~~USE ONLY DURING INSTL OPERATION, 4 U/W PC 77, 1 U/W PC 157~~	~~VAR~~

SIZE	CAGE NO.	WT GRP	NAVSEA DRAWING NO.	REV
B	53711	904	4398614	V
SCALE – NONE			SHEET 9	

LIST OF PARTS FOR ONE ASSEMBLY (CONTD)

REV	ITEM NO.	QTY REQD	DESCRIPTION	MATERIAL SPECIFICATIONS	MATERIAL REQUIRED	NSN OR MANUF PART NO.	REMARKS	ZONE
R	~~81~~	~~1~~	~~SLING ASSEMBLY, BUOY~~	~~→~~	~~→~~		~~C/O PC'S 82-104 & QTY 4 OF 79~~	~~D-32~~
R	~~82~~	~~1~~	~~SLING WELDMENT~~	~~→~~	~~→~~		~~C/O PC'S 83, 84, 85, 86 OR 87~~	~~A-32~~
R	~~83~~	~~2~~	~~PLATE, EXTENSION, 1/4 FB~~	~~MIL-S-22698~~	~~STEEL~~		~~TYPE 1, CLASS A, ALTERNATE MATERIAL QQ-S-741~~	~~A-32~~
R	~~84~~	~~4~~	~~TUBE, EYEBOLT, 1 1/4 OD X 13/16 ID~~	~~QQ-T-830~~	~~STEEL~~			~~A-32~~
R	~~85~~	~~1~~	~~PLATE, LIFTING, 1/2 FB~~	~~MIL-S-22698~~	~~STEEL~~		~~TYPE 1, CLASS A, OR ALT PC 87, ALTERNATE MATERIAL QQ-S-741~~	~~C-32~~
R	~~86~~	~~1~~	~~PLATE, FLANGE, 1/4 FB~~	~~MIL-S-22698~~	~~STEEL~~		~~TYPE 1, CLASS A, OR ALT PC 87, ALTERNATE MATERIAL QQ-S-741~~	~~C-32~~
R	~~87~~	~~1~~	~~TEE, STRUCTURAL ST 5 X 12.7~~	~~ASTM A36~~	~~STEEL~~		~~ALT FOR FABRICATED PC'S 85 & 86~~	~~B-32~~
P	88	–	–	–	–	–	–	–
T	~~89~~	~~2FT~~	~~CHANNEL, RUBBER~~	~~COML~~	~~RUBBER~~		~~ATLANTIC INDIA RUBBER PN X-1039 OR EQUAL~~	~~D-32~~
R	~~90~~	~~3FT~~	~~PAD, RUBBER, 1/2 THK~~	~~COML~~	~~RUBBER~~		~~ATLANTIC INDIA RUBBER PN X-5884 OR EQUAL~~	~~D-32~~
R	~~91~~	~~A/R~~	~~ADHESIVE, NEOPRENE~~	~~→~~	~~→~~		~~RIVER TEX NO. 27730/STOCKWELL RUBBER CO., PHILA, PA OR EQUAL~~	~~VAR~~
P	92	–	–	–	–	–	–	–
T	~~93~~	~~1~~	~~ASSEMBLY 93, LIFTING CLAMP~~	~~→~~	~~→~~	~~2040-01-238-9529~~	~~C/O PC'S 16, 17, 22, 27, 28, 29, 30, 53, 54, 60 & 62, DIM & STAMP IAW E-22 & NOTES 5, 19 AND 21~~	~~E-22~~
P	94-95	–	–	–	–	–	–	–
U	96	→	WIRE ROPE ASSEMBLY	→	→	–	C/O PC'S 97-100, QTY 2: U/W ITEM 232	F-32
R	97	1	ROPE, WIRE, 1/2 DIA X 7'-0"	RR-W-410	CRES	–	TYPE 1, CLASS 2, CONSTRUCTION II	F-32
R	98	2	THIMBLE – WIRE CABLE	AN100-16	STEEL	–	–	F-32
U	99	1	HOSE, GARDEN, 5/8 DIA ~~X 52 LG~~	COML	RUBBER	–	PN 3809 MADDOCK & CO., BALA CYNWYD, PA, OR EQIUV.	F-32
R	100	2	SLEEVE, SWAGING – WIRE ROPE	MS51844-72	CRES	4030-01-375-6135	–	F-32
P	101	–	–	–	–	–	–	–
R	~~102~~	~~4~~	~~BOLT, EYE SHOULDER SPEC, 3/4-10 UNC 2A, 12 LG~~	~~COML~~	~~STEEL~~		~~J.H. WILLIAMS NO. 28 OR EQUAL~~	~~D-32~~
R	~~103~~	~~4~~	~~NUT, WING, 3/4-10 UNC~~	~~COML~~	~~STEEL~~		~~AS SUPPLIED BY MADDOCK & CO., BALA CYNWYD, PA, OR EQUAL~~	~~VAR~~
R	~~104~~	~~→~~	~~WASHER, FLAT, .812 ID BASIC~~	~~MS27183-23~~	~~STEEL~~	~~5310-00-809-8533~~	~~QTY 20, 4 U/W ITEM 103, 16 U/W ITEM 202~~	~~D-32~~
V	~~105~~	~~1~~	~~LIFTING SLING ASSEMBLY, AN/DPS-15 PDSTL~~	~~→~~	~~→~~		~~C/O PC'S 106-111, 2 OF 25 & 4 OF 26~~	~~A-42~~

SIZE	CAGE NO.	WT GRP	NAVSEA DRAWING NO.	REV
B	53711	904	4398614	V
SCALE – NONE			SHEET 10	

LIST OF PARTS FOR ONE ASSEMBLY (CONTD)

REV	ITEM NO.	QTY REQD	DESCRIPTION	MATERIAL SPECIFICATIONS	MATERIAL REQUIRED	NSN OR MANUF PART NO.	REMARKS	ZONE
V	~~106~~	~~1~~	~~SLING HALF PORT - 1/2 FB~~	~~MIL S 22698~~	~~STEEL~~		~~TYPE 1, CLASS A, ALTERNATE MATERIAL ASTM A36/A36M~~	~~A 42~~
V	~~107~~	~~1~~	~~SLING HALF STBD - 1/2 FB~~	~~MIL S 22698~~	~~STEEL~~		~~TYPE 1, CLASS A, ALTERNATE MATERIAL ASTM A36/A36M~~	~~A 42~~
V	~~108~~	~~6~~	~~LIFTING PAD - 1/2 FB~~	~~MIL S 22698~~	~~STEEL~~		~~TYPE 1, CLASS A, ALTERNATE MATERIAL ASTM A36/A36M~~	~~A 42~~
V	~~109~~	~~3~~	~~SHACKLE, ANCHOR SCREW PIN~~	~~AN116 3~~	~~STEEL~~		~~SAFE WORKING LOAD 1 TON~~	~~A 42~~
V	~~110~~	~~3~~	~~ANGLE, 2 X 2 X 1/4~~	~~ASTM A36~~	~~STEEL~~			~~A 42~~
V	~~111~~	~~3~~	~~BOLT, HEX HD 5/8 11 UNC 2A X 2 LG~~	~~MS90725 164~~	~~STEEL~~	~~5305 00 724 7222~~		~~A 42~~
P	112	1	WELDMENT TEST WEIGHT FIXTURE	→	→	–	C/O ITEMS 116–118, SEE NOTE 22	C–43
P	113	1	WELDMENT TEST WEIGHT FIXTURE	→	→	–	C/O ITEMS 114–116	A–50
R	114	1	BASE – 3/4 PL	MIL–S–22698	STEEL	–	TYPE 1, CLASS A, ALTERNATE MATERIAL ASTM A36/A36M	A–50
R	115	1	SUPPORT – 3/4 FB	MIL–S–22698	STEEL	–	TYPE 1, CLASS A, ALTERNATE MATERIAL ASTM A36/A36M	A–50
V	116	→	PAD EYE – 3/4 THK	MIL–S–22698	STEEL	–	TYPE 1, CLASS A, ALTERNATE MATERIAL ASTM A36/A36M 1 U/W 112, 1 U/W 113	C–43
R	117	1	BASE – 3/4 PL	MIL–S–22698	STEEL	–	TYPE 1, CLASS A, ALTERNATE MATERIAL ASTM A36/A36M	C–43
R	118	1	SUPPORT – 3/4 FB	MIL–S–22698	STEEL	–	TYPE 1, CLASS A, ALTERNATE MATERIAL ASTM A36/A36M	C–43
U	~~119~~	~~A/R~~	~~FREON (TRICHLOROTRIFLOUROETHANE)~~	~~MIL C 81302~~	~~LIQUID~~	~~6850 00 142 9247~~	~~TYPE 2, USED FOR DEGREASING PERIS BARREL (TOXIC VAPORS) SEE NOTE 14~~	—
U	~~120~~	~~A/R~~	~~METHYL CHLOROFORM (TRICHLORETHANE)~~	~~MIL T 81533~~	~~LIQUID~~	~~6810 00 476 5612~~	~~INHIBITIVE, USED FOR DEGREASING PERIS BARREL (TOXIC VAPORS) SEE NOTE 14~~	—
T	~~121~~	~~1~~	~~ASSY INSTL AID 1653 OR 3327 STACK~~	→	→	~~5895 01 345 5954~~	~~C/O ITEMS 122 135, SEE NOTE 22~~	~~B 33~~
T	~~122~~	~~1~~	~~SUPPORT, TOP - 3 OD X 45~~	~~QQ A 250/5~~	~~AL ALY~~		~~2024 J.W. DONOVAN CO. OR EQUIVALENT~~	~~B 33~~
T	~~123~~	~~1~~	~~LUG, LIFTING - 3/4 PL~~	~~QQ A 250/7~~	~~AL ALY~~		~~5086 J.W. DONOVAN CO. OR EQUIVALENT~~	~~B 33~~
T	~~124~~	~~2~~	~~SUPPORT, VERTICAL - 3 OD X 12' 3"~~	~~QQ A 250/5~~	~~AL ALY~~		~~2024 J.W. DONOVAN CO. OR EQUIVALENT~~	~~B 33~~
T	~~125~~	~~6~~	~~SLEEVE - 3 1/2 OD X 6 (.216 WALL THK)~~	~~QQ A 250/5~~	~~AL ALY~~		~~2024 J.W. DONOVAN CO. OR EQUIVALENT~~	~~B 33~~
T	~~126~~	~~6~~	~~PIN, LOCK - 1/2 OD X 4.000 GRIP~~	~~MS17985C840~~	~~CRES~~	~~5315 01 355 7251~~	~~J.W. DONOVAN CO. OR EQUIVALENT~~	~~B 33~~
P	127	–	–	–	–	–	–	–
T	~~128~~	~~4~~	~~PLATE, VERTICAL - 4.0 X 12.0 X 3/4 THK~~	~~QQ A 250/7~~	~~AL ALY~~		~~5086 J.W. DONOVAN CO. OR EQUIVALENT~~	~~C 34~~
T	~~129~~	~~8~~	~~PLATE, SIDE - 4.0 X 8.0 X 1/2 THK~~	~~QQ A 250/7~~	~~AL ALY~~		~~5086 J.W. DONOVAN CO. OR EQUIVALENT~~	~~C 34~~

SIZE	CAGE NO.	WT GRP	NAVSEA DRAWING NO.	REV
B	53711	904	4398614	V
SCALE – NONE			SHEET 11	

LIST OF PARTS FOR ONE ASSEMBLY (CONTD)

REV	ITEM NO.	QTY REQD	DESCRIPTION	MATERIAL SPECIFICATIONS	MATERIAL REQUIRED	NSN OR MANUF PART NO.	REMARKS	ZONE
T	~~130~~	~~2~~	~~CLAMP, MAST MODIFIED~~	~~→~~	~~→~~		~~C/O ITEMS 131 134, MAKE FROM ITEM 2, SEE NOTE 17~~	~~C 34~~
T	~~131~~	~~2~~	~~PLATE, FORWARD 4.0 X 6.0 X 1/2 THK~~	~~QQ S 634~~	~~STEEL~~		~~AISI 1018 OR 1010~~	~~B 33~~
T	~~132~~	~~2~~	~~PLATE, AFT 4.0 X 4.0 X 1/2 THK~~	~~QQ S 634~~	~~STEEL~~		~~AISI 1018 OR 1010~~	~~B 33~~
T	~~133~~	~~8~~	~~SCREW, HEX HD CAP, 1 8 UNC 2A X 5 LG~~	~~MS90725 242~~	~~STEEL~~	~~5305 00 921 0927~~	~~GRADE 5, CD PL~~	~~B 33~~
T	~~134~~	~~→~~	~~NUT, SLFLKG, HEX 1 8 UNC 3B~~	~~MS17829 16C~~	~~STEEL~~	~~5310 00 519 6628~~	~~8 U/W 121, 1 U/W 157, TYPE II, CLASS 3, CD PL~~	~~VAR~~
T	~~135~~	~~7~~	~~STEP, ANGLE 2 X 2 X 1/8~~	~~QQ A 250/5~~	~~AL ALY~~		~~2024 J.W. DONOVAN CO. OR EQUIVALENT~~	~~B 33~~
P	136–137	–	–	–	–	–	–	–
T	~~138~~	~~1~~	~~ASSY STAUNCH PLATE PROTECTIVE COVER~~	~~→~~	~~→~~		~~C/O ITEMS 139 143~~	~~A 35~~
T	~~139~~	~~1~~	~~FLANGE, TOP 1/4 PL~~	~~QQ A 250/4~~	~~AL ALY~~			~~A 35~~
T	~~140~~	~~1~~	~~PLATE, BOTTOM 1/4 PL~~	~~QQ A 250/4~~	~~AL ALY~~			~~A 35~~
T	~~141~~	~~1~~	~~PLATE, OUTSIDE 1/4 PL~~	~~QQ A 250/4~~	~~AL ALY~~			~~A 35~~
T	~~142~~	~~A/R~~	~~GASKET .06 THK~~	~~MIL R 2765~~	~~RUBBER~~	~~5330 00 222 2566~~	~~C/O ITEMS 139 143~~	~~A 35~~
T	~~143~~	~~A/R~~	~~ADHESIVE~~	~~COML~~	~~→~~		~~TADFAST CONTACT BOND, 82 40 AMCHEM PROD, AMBLER, PA OR EQUIVALENT~~	~~A 35~~
P	144–145	–	–	–	–	–	–	–
T	~~146~~	~~1~~	~~ASSY INSTALLATION AID STAUNCH PLATE~~	~~→~~	~~→~~		~~C/O ITEMS 147 151, SEE NOTE 22~~	~~A 34~~
T	~~147~~	~~1~~	~~PLATE, LIFTING 1/2 THK~~	~~MIL S 634~~	~~STEEL~~	~~9510 00 596 3860~~	~~AISI 1018 OR 1010~~	~~A 34~~
T	~~148~~	~~1~~	~~BOLT, EYE SHOULDER 1/2~~	~~MS51937 5~~	~~→~~	~~5306 00 050 0347~~		~~A 34~~
V	149	→	WASHER, FLAT, 1/2 MED	MS27183–18	STEEL	5310–00–809–5998	QTY 3, 1 U/W 146 & 2 U/W 161	A–37
T	~~150~~	~~1~~	~~NUT, ESNA, 1/2 13 UNC 3B~~	~~MS17828 8C~~	~~NI CU~~	~~5310 00 245 3504~~	~~ESNA OR EQUIVALENT~~	~~A 34~~
P	151	→	SHACKLE	MIL–S–24214	STEEL	4030–00–278–0698	TYPE 1, GRADE A, CLASS 2, QTY 5: 1 U/W ITEM 146, 4 U/W ITEM 232, SAFE WORKING LOAD 8650 LBS	C–40
P	152–156	–	–	–	–	–	–	–
T	~~157~~	~~1~~	~~ASSEMBLY LIFTING PLATE~~	~~→~~	~~→~~		~~C/O ITEMS 29, 134, 158 160 & 180 (USE WITH REF 38)~~	~~B 43~~
T	~~158~~	~~1~~	~~PLATE 1/2~~	~~MIL S 22698~~	~~STEEL~~		~~TYPE 1, CLASS A~~	~~A 43~~

SIZE	CAGE NO.	WT GRP	NAVSEA DRAWING NO.	REV
B	53711	904	4398614	V
SCALE – NONE			SHEET 12	

LIST OF PARTS FOR ONE ASSEMBLY (CONTD)

REV	ITEM NO.	QTY REQD	DESCRIPTION	MATERIAL SPECIFICATIONS	MATERIAL REQUIRED	NSN OR MANUF PART NO.	REMARKS	ZONE
T	~~159~~	~~16~~	~~BOLT, HEX, 3/4-10 UNC-2A X 2 3/4 LG~~	~~MS35307-490~~	→	~~5305-00-948-0669~~		~~B-43~~
T	~~160~~	~~16~~	~~NUT, ESNA, 3/4-10 UNC-3B~~	~~MS17829-12C~~	→	~~5310-00-519-6630~~	~~162, 165, 168-172, 177~~	~~B-43~~
V	161	1	TEE BAR ASSEMBLY BUOY	→	→	–	C/O ITEMS 162, 165, 168–172, 177, 2 OF 149	C–36
P	162	1	FORWARD SECTION ASSEMBLY	→	→	–	C/O ITEMS 163 & 164	A–37
R	163	A/R	PIPE, 2 1/2 DIA, SCHEDULE 40	COML	STEEL	–	ASTM–A53	B–37, C–37, C–51
P	164	2	PLATE, LIFTING – 3/8 THK	COML	STEEL	–	ASTM–A36/A36M	B–37, C–51, D–51
P	165	1	AFT SECTION ASSEMBLY	→	→	–	C/O ITEMS 163, 166 & 167	A–37
R	166	A/R	PIPE, 2 DIA, SCHEDULE 40	COML	STEEL	–	ASTM–A53	C–37, D–51
P	167	2	PLATE – .375 THK	COML	STEEL	–	ASTM–A36/A36M	C–37, C–51
V	168	2	BOLT, HEX HD, 1/2–20UNF X 3 1/2 LG	NASM 35308–421	STEEL	5310–00–519–6630	–	A–37
V	169	2	WASHER, LOCK – 1/2	NASM 35338–143	STEEL	5310–01–180–7157	–	A–37
V	170	2	NUT, HEX, 1/2–20UNF	NASM 35650–3394	STEEL	5310–00–488–9327	–	A–37
P	171	1	RING, PEAR SHAPED – 3.50	COML	STEEL	–	SEE NOTE 11	A–37
V	172	1	WIRE ROPE ASSEMBLY	→	→	–	C/O ITEMS 173–175	A–37
P	173	1	ROPE, WIRE – 3/8 DIA	RR–W–410	CRES	–	TYPE 1, CLASS 2, CONSTRUCTION II	VAR
P	174	→	THIMBLE – 3/8	AN100C–12	STEEL	4030–00–272–7745	QTY 6, 2 U/W 172, 2 U/W 177, 2 U/W 246	D–38, F–38
P	175	→	SLEEVE – 3/8	MS51844–90	CRES	4030–01–127–8698	QTY 6, 2 U/W 172, 2 U/W 177, 2 U/W 246	D–38, F–38
P	176	–	–	–	–	–	–	–
V	177	3	WIRE ROPE ASSEMBLY	→	→	–	C/O ITEMS 173–175 & 178	A–37
P	178	1	SWIVEL HOOK W/LATCH CAT S–322 C	COML	STEEL	–	SAFE WORK LOAD 1 TON, 6 5/8 LG X 3 1/16, AMERICAN HOIST & DERECK CO. OR EQUAL	F–38
P	179	–	–	–	–	–	–	–
P	180	1	SPREADER BAR ASSEMBLY	→	→	–	C/O ITEMS 181–183	C–36
R	181	1	PIPE, 4.500 DIA, SCHEDULE 40	COML	STEEL	–	ASTM–A53	B–38
R	182	2	END PLATE	COML	STEEL	–	ASTM–A36/A36M	A–38

SIZE	CAGE NO.	WT GRP	NAVSEA DRAWING NO.	REV
B	53711	904	4398614	V
SCALE – NONE			SHEET 13	

LIST OF PARTS FOR ONE ASSEMBLY (CONTD)

REV	ITEM NO.	QTY REQD	DESCRIPTION	MATERIAL SPECIFICATIONS	MATERIAL REQUIRED	NSN OR MANUF PART NO.	REMARKS	ZONE
R	183	2	TOP GUSSET	COML	STEEL	–	ASTM–A36/A36M	B–38
P	184	–	–	–	–	–	–	–
U	185	1	WIRE CABLE ASSEMBLY	→	→	–	C/O ITEMS 186–188, SEE NOTE 25	C–36
P	186	A/R	WIRE CABLE – 5/8 DIA	RR–W–410	CRES	–	TYPE 1, CLASS 2, CONSTRUCTION II	E–38
P	187	2	THIMBLE – 5/8	AN100–20	STEEL	4030–00–262–1888	–	E–38
P	188	2	SLEEVE – 5/8	MS51844–94	CRES	4030–01–166–3719	–	E–38
P	189	–	–	–	–	–	–	–
P	190	2	SWIVEL, TY S–2, 3 3/16 X 10 5/16, CAT 5–S–2	COML	STEEL	–	SAFE WORK LOAD 5 TONS, AMERICAN HOIST & DERECK CO. OR EQUIV	VAR
P	191	–	–	–	–	–	–	–
P	192	2	WIRE CABLE ASSEMBLY	→	→	–	C/O ITEMS 193–195	C–36
P	193	A/R	WIRE CABLE, .750 DIA	RR–W–410	CRES	–	TYPE 1, CLASS 2, CONSTRUCTION II	G–38
P	194	2	THIMBLE, 3/4, CATALOG NO. G414	FF–T–276	STEEL	–	CROSBY BLOCK DIVISION, FSCM 64921, AMERICAN HOIST & DERECK CO.	G–38
P	195	2	SLEEVE – 3/4	COML	STEEL	–	CATALOG S–506, NATIONAL PRODUCTS DIVISION, AMERICAN HOIST & DERECK CO. OR EQUAL	G–38
P	196	–	–	–	–	–	–	–
P	197	2	SNATCH BLOCK W/UPSET SWIVEL SHACKLE, 8 DIA	COML	MAL IRON	–	SAFE WORKING LOAD 3 TONS, CATALOG NO. K954S, CROSBY BLOCK DIVISION, FSCM 64921	C–36
P	198	2	SHACKLE ANCHOR–STEEL SCREW PIN	AN116–12	STEEL	4030–00–242–5575	SAFE WORKING LOAD 6 1/2 TONS	C–36
V	199	1	SLING LINK, WELDLESS, 1 3/8 X 8 1/4	COML	STEEL	–	CATALOG S–341, SAFE WORKING LOAD 10 1/4 TONS, AMERICAN HOIST & DERECK CO. OR EQUIVALENT	C–36
P	200	–	–	–	–	–	–	–
P	201	1	SNORKEL CLAMP ASSEMBLY	→	→	–	SEE REFERENCE 36	–
P	~~202~~	~~1~~	~~ASSEMBLY 202, LIFTING CLAMP~~	~~→~~	~~→~~	~~2040–01–128–9485~~	~~C/O ITEMS 23, 104, 203–215, DIM & STAMP IAW A–23, B–23 & NOTES 5, 19 & 21~~	~~A–23~~
R	~~203~~	~~1~~	~~CLAMP HALF, FWD 1/2 FB~~	~~MIL–S–22698~~	~~STEEL~~		~~TYPE 1, CLASS A, ALTERNATE MATERIAL ASTM A36/A36M~~	~~B–28~~
R	~~204~~	~~1~~	~~CLAMP HALF, AFT 1/2 FB~~	~~MIL–S–22698~~	~~STEEL~~		~~TYPE 1, CLASS A, ALTERNATE MATERIAL ASTM A36/A36M~~	~~B–28~~
R	~~205~~	~~12~~	~~GUSSET – 1/2 FB~~	~~MIL–S–22698~~	~~STEEL~~		~~TYPE 1, CLASS A, ALTERNATE MATERIAL ASTM A36/A36M~~	~~A–28~~
P	~~206~~	~~1~~	~~BRAKE LINING, FWD 1/4 THK~~	~~COML~~	~~→~~		~~RAYMARK M, 9010–1, DIM IAW B–30 & D–30, SEE NOTE 23~~	~~A–28~~

SIZE	CAGE NO.	WT GRP	NAVSEA DRAWING NO.	REV
B	53711	904	4398614	V
SCALE – NONE			SHEET 14	

LIST OF PARTS FOR ONE ASSEMBLY (CONTD)

REV	ITEM NO.	QTY REQD	DESCRIPTION	MATERIAL SPECIFICATIONS	MATERIAL REQUIRED	NSN OR MANUF PART NO.	REMARKS	ZONE
P	~~207~~	~~1~~	~~BRAKE LINING, AFT 1/4 THK~~	~~COML~~	~~→~~		~~RAYMARK M, 9010 1, DIM IAW B 30 & D 30, SEE NOTE 23~~	~~A 28~~
P	~~208~~	~~2~~	~~BRAKE LINING, FWD 1/4 THK~~	~~COML~~	~~→~~		~~RAYMARK M, 9010 1, DIM IAW B 30 & D 30, SEE NOTE 23~~	~~A 28~~
P	~~209~~	~~2~~	~~BRAKE LINING, AFT 1/4 THK~~	~~COML~~	~~→~~		~~RAYMARK M, 9010 1, DIM IAW B 30 & D 30, SEE NOTE 23~~	~~A 28~~
R	~~210~~	~~2~~	~~LUG, LIFTING — 1/2 FB~~	~~MIL S 22698~~	~~STEEL~~		~~TYPE 1, CLASS A, ALTERNATE MATERIAL ASTM A36/A36M~~	~~B 28~~
P	~~211~~	~~8~~	~~BOLT, HEX HD, 3/4 16 UNF 2A X 4 LG~~	~~MS90726 195~~	~~STEEL~~	~~5305 00 728 0215~~		~~B 28~~
P	~~212~~	~~8~~	~~NUT, PLAIN HEX, 3/4 16 UNF 2B~~	~~MS51968 23~~	~~STEEL~~	~~5310 00 763 8901~~		~~B 28~~
P	~~213~~	~~16~~	~~WASHER, FLAT, 3/4 MED~~	~~MS15795 455~~	~~NI CU~~	~~5310 00 352 9586~~		~~B 28~~
P	~~214~~	~~A/R~~	~~RIVET, 3/16 DIA X 1 LG~~	~~MS20613 6P16~~	~~STEEL~~	~~5320 00 068 6928~~	~~SOLID UNIV HD~~	~~A 28~~
P	~~215~~	~~2~~	~~SPACER~~	~~ASTM A 36~~	~~STEEL~~			~~D 30~~
P	216	–	–	–	–	–	–	–
P	217	1	WELDMENT: TEST WEIGHT FIXTURE	→	→	–	C/O PC 218–220	A–30
R	218	1	BASE, 1 THK	MIL–S–22698	STEEL	–	TYPE 1, CLASS A, ALTERNATE MATERIAL ASTM A36/A36M	A–30
R	219	1	SUPPORT, 3/4 PL	MIL–S–22698	STEEL	–	TYPE 1, CLASS A, ALTERNATE MATERIAL ASTM A36/A36M	A–30
R	220	2	SUPPORT, 3/4 PL	MIL–S–22698	STEEL	–	TYPE 1, CLASS A, ALTERNATE MATERIAL ASTM A36/A36M	A–30
P	221	–	–	–	–	–	–	–
P	222	2	BOLT, EYE SHOULDER	MS51937–12	STEEL	5306–00–207–5425	–	A–30
P	223	2	NUT, JAM–HEAVY, 1 1/4–7 UNC–2B	QQ–N–281	NI–CU	–	CLASS A, FF–N–836, TYPE II, STYLE 7	A–30
P	224–225	–	–	–	–	–	–	–
U	~~226~~		~~ASSEMBLY 226, SUPPORT CLAMP~~	~~→~~	~~→~~		~~C/O PC 227, 228 & 229, QTY 2 OF 25, QTY 4 OF 26~~	~~A 39~~
U	~~227~~	~~2~~	~~SUPPORT HALF, 1/2 FB~~	~~MIL S 22698~~	~~STEEL~~	~~9515 00 067 7590~~	~~TYPE 1, CLASS A, ALTERNATE MATERIAL ASTM A36/A36M~~	~~B 39~~
U	~~228~~	~~2~~	~~RING HALF, 1 FB~~	~~MIL S 22698~~	~~STEEL~~		~~TYPE 1, CLASS A, ALTERNATE MATERIAL ASTM A36/A36M~~	~~B 39~~
V	229	–	BOLT, HEX HD, 5/8–11 UNC–2A X 1 3/4 LG	MS90725–163	STEEL	5305–00–724–5911	QTY ~~6: 2 U/W 226,~~ 4 U/W 232	B–40
P	230–231	–	–	–	–	–	–	–
V	232	1	ASSEMBLY 232, SLIDING CLAMP	–	–	3940–01–544–0133	C/O PC 233, 234, QTY 4 OF 25, QTY 8 OF 26	C–40
R	233	2	SUPPORT HALF, 1/2 FB	MIL–S–22698	–	–	TYPE 1, CLASS A, ALTERNATE MATERIAL ASTM A36/A36M	B–40

SIZE	CAGE NO.	WT GRP	NAVSEA DRAWING NO.	REV
B	53711	904	4398614	V
SCALE – NONE			SHEET 15	

LIST OF PARTS FOR ONE ASSEMBLY (CONTD)

REV	ITEM NO.	QTY REQD	DESCRIPTION	MATERIAL SPECIFICATIONS	MATERIAL REQUIRED	NSN OR MANUF PART NO.	REMARKS	ZONE
R	234	2	LUG, LIFTING, 1/2 FB	MIL-S-22698	STEEL	-	TYPE 1, CLASS A, ALTERNATE MATERIAL ASTM A36/A36M	B-40
P	235-236	-	-	-	-	-	-	-
P	237	1	SAFETY-STOP PIN ASSEMBLY	→	→	-	C/O PC 238 & 239	A-41
R	238	1	PIN, 1.38 OD	QQ-N-281	NI-CU	-	CLASS A, CD	A-41
P	239	1	NUT, 1.38 OD	QQ-N-281	NI-CU	-	CLASS A, CD	A-41
P	240	-	-	-	-	-	-	-
T	~~241~~	~~1~~	~~BUOY LIFTING ASSEMBLY~~	→	→		~~C/O PC 172, 190, 199 AND 242-246~~	~~D-36~~
T	~~242~~	~~4~~	~~HOIST RING, 1/2-13 THD, 2,500 LOAD~~	~~ANSI 4140~~	~~ALY STL~~	~~3950-01-267-9430~~	~~JERGENS PART NO. 23413~~	~~D-36~~
T	~~243~~	~~2~~	~~TAG, FORWARD, .03 THK~~	~~COML~~	~~ALUMINUM~~			~~D-36~~
T	~~244~~	~~2~~	~~TAG, TEST LOAD, .03 THK~~	~~COML~~	~~ALUMINUM~~		~~2,500 LBS~~	~~D-36~~
T	~~245~~	~~2~~	~~TAG, AFT, .03 THK~~	~~COML~~	~~ALUMINUM~~			~~D-36~~
T	~~246~~	~~1~~	~~CABLE ASSEMBLY~~	→	→		~~C/O ITEMS 173-175~~	~~D-36~~
P	247	1	STRONGBACK ASSEMBLY	→	→	-	C/O ITEMS 248-264	A-45
P	248	2	PLATE, 1/2 THK	ASTM-B-209	AL ALY	-	5086-H32 ALT 5086-H34 OR 5086-H116	VAR
P	249	1	PLATE, 1/2 THK, 4.00 X 8'-0	ASTM-B-209	AL ALY	-	5086-H32 ALT 5086-H34 OR 5086-H116	VAR
P	250	1	PLATE, 1/2 THK, 4.00 X 67.00	ASTM-B-209	AL ALY	-	5086-H32 ALT 5086-H34 OR 5086-H116	VAR
P	251	2	PLATE, 3/8 THK	ASTM-B-209	AL ALY	-	5086-H32 ALT 5086-H34 OR 5086-H116	VAR
P	252	1	PLATE, 3/8 THK, 7.00 X 8'-0	ASTM-B-209	AL ALY	-	5086-H32 ALT 5086-H34 OR 5086-H116	VAR
P	253	4	PLATE, 1/4 THK, 1.81 X 6.00	ASTM-B-209	AL ALY	-	5086-H32 ALT 5086-H34 OR 5086-H116	B-45
P	254	4	PLATE, 1/4 THK	ASTM-B-209	AL ALY	-	5086-H32 ALT 5086-H34 OR 5086-H116	VAR
P	255	4	PLATE, 3/8 THK	ASTM-B-209	AL ALY	-	5086-H32 ALT 5086-H34 OR 5086-H116	E-46
P	256	4	PLATE, 3/8 THK	ASTM-B-209	AL ALY	-	5086-H32 ALT 5086-H34 OR 5086-H116	D-46
P	257	1	PLATE, 1 THK	ASTM-B-209	AL ALY	-	5086-H32 ALT 5086-H34 OR 5086-H116	E-46
P	258	1	PLATE, 3/4 THK	ASTM-B-209	AL ALY	-	5086-H32 ALT 5086-H34 OR 5086-H116	E-46
P	259	4	PLATE, 1/4 THK	ASTM-B-209	AL ALY	-	5086-H32 ALT 5086-H34 OR 5086-H116	B-46
P	260	2	PLATE, 3/4 THK	ASTM-B-209	AL ALY	-	5086-H32 ALT 5086-H34 OR 5086-H116	A-46

SIZE	CAGE NO.	WT GRP	NAVSEA DRAWING NO.	REV
B	53711	904	4398614	T
SCALE - NONE			SHEET 16	

LIST OF PARTS FOR ONE ASSEMBLY (CONTD)

REV	ITEM NO.	QTY REQD	DESCRIPTION	MATERIAL SPECIFICATIONS	MATERIAL REQUIRED	NSN OR MANUF PART NO.	REMARKS	ZONE
P	261	2	PLATE, 3/4 THK	ASTM-B-209	AL ALY	-	5086-H32 ALT 5086-H34 OR 5086-H116	A-45
P	262	2	STAPLE, 3/8 DIA, ROUND BAR	QQ-A-200/5	AL ALY	-	-	C-46
P	263	1	LABEL PLATE, .05 THK	QQ-A-200/8	AL ALY	-	-	A-47
V	264	→	SCREW, ROUND HEAD, .112 (NO. 4) X 3/16 LG	MIL-DTL-1222	CRES	-	4 U/W 247 AND 4 U/W 267	A-45
P	265	1	LINK, 3/4 DIA, ROUND BAR	MIL-S-22698	STEEL	-	-	C-47
P	266	-	-	-	-	-	-	-
P	267	2	CLAMP ASSEMBLY	→	→	-	C/O ITEMS 60, 62 AND 268-276	A-48
P	268	4	PLATE, 10.2#	MIL-S-22698	STEEL	-	-	A-48
P	269	8	PLATE, 10.2#	MIL-S-22698	STEEL	-	-	A-48
P	270	2	PLATE, 10.2#	MIL-S-22698	STEEL	-	-	A-48
P	271	2	PLATE, 10.2#	MIL-S-22698	STEEL	-	-	A-48
P	272	2	PLATE, 15.3#	MIL-S-22698	STEEL	-	-	A-48
V	273	2	BOLT, HEX HD, 1/2-13 UNC-2A X 2 LG	MIL-DTL-1222	K-MONEL	-	-	A-48
V	274	2	BOLT, HEX HD, 1/2-13 UNC-2A X 4 LG	MIL-DTL-1222	K-MONEL	-	-	A-48
V	275	4	NUT, 1/2-13 UNC-2B	MIL-DTL-1222	K-MONEL	-	2 U/W 273 AND 2 U/W 274	A-48
P	276	1	LABEL PLATE, .05 THK	QQ-A-200/8	AL ALY	-	-	B-47
P	277	1	STRONGBACK LIFTING ASSEMBLY	→	→	-	C/O ITEMS 247 AND 267	A-49
P	278-279	-	-	-	-	-	-	-
P	280	1	HINGE CARRIAGE FOR PERIS HDLG ASSY	→	→	-	SEE REFERENCE 40	-
T	281	1	SPREADER BAR ASSEMBLY	→	→	-	C/O ITEMS 282 AND 285-287, SEE NOTE 18	D-50
P	282	1	PIPE WELDMENT	→	→	-	C/O ITEMS 283 AND 284	C-50
P	283	1	PIPE, 1" NOMINAL, SCHEDULE 40	COML	STEEL	-	ASTM-120	C-50
R	284	2	PLATE, 1/2 THK	COML	STEEL	-	ASTM-A36/A36M	C-50
R	285	2	CLAMP, 1/2 THK	COML	STEEL	-	ASTM-A36/A36M	C-50
V	286	4	BOLT, HEX HD, 3/8-16 UNC-2A X 1 3/8 LG	NASM 90725-63	STEEL	5305-00-269-4511	-	C-50
P	287	4	WASHER, LOCK, 3/8 NOMINAL	A-A-55610	STEEL	-	-	C-50

SIZE	CAGE NO.	WT GRP	NAVSEA DRAWING NO.	REV
B	53711	904	4398614	V
SCALE - NONE			SHEET 17	

LIST OF PARTS FOR ONE ASSEMBLY (CONTD)

REV	ITEM NO.	QTY REQD	DESCRIPTION	MATERIAL SPECIFICATIONS	MATERIAL REQUIRED	NSN OR MANUF PART NO.	REMARKS	ZONE
T	~~288~~	~~2~~	~~TUBING, SQ STRUCT 2 1/2 X 2 1/2 3/16 X 30 LG~~	~~COML~~	~~STEEL~~		~~ASTM A5000 GR B~~	~~A 73~~
T	~~289~~	~~2~~	~~SHACKLE, SCREW PIN 5/8~~	~~RR C 271~~	~~STEEL~~		~~TYPE IV B, CL 2, GR A~~	~~B 73~~
T	~~290~~	~~2~~	~~SHACKLE, SCREW PIN 1/2~~	~~RR C 271~~	~~STEEL~~		~~TYPE IV B, CL 2, GR A~~	~~C 73~~
T	~~291~~	~~1~~	~~ASSEMBLY 291, SUPPORT BAR~~				~~C/O ITEMS 288 290, & 351~~	~~C 73~~
V	292	2	LIFTING EYE, TYPE 18 ONLY	~~SEE REMARKS~~	~~STEEL~~	5340-01-056-2113	~~QQ-S-630, TYPE 1044 OR QQ-S-631, TYPE1035~~ SEE REFERENCE 62	A-51
U	293	2	SUPPORT BAR	AISI/SAE 1045	STEEL	–	CD, 91 KSI MIN TENSILE STRENGTH, 77 KSI MIN YIELD STRENGTH	A-51
V	294	1	WEIGHT TEST FIXTURE, TYPE 18 ONLY	AISI/SAE 1045	STEEL	–	CD, 91 KSI MIN TENSILE STRENGTH, 77 KSI MIN YIELD STRENGTH	F-52
V	295	2	BOLT, 3/4-10 UNC-2A X 1 1/4 LG	–	CRES	–	–	A-51
V	296	2	LOCK WASHER	NASM 35338-146	CRES	–	–	A-51
P	297	4	LIFTING LUG, REMOVABLE 1/2 FB	QQ-S-634	STEEL	–	ANSI-1010 OR ANSI-1018	D-47
T	298	1	ASSEMBLY 298, ~~LIFTING~~ HOIST CYLINDER CLAMP	–	–	7G3940-01-442-7015	C/O PC 299-302 & 306-308, STAMP IAW NOTES 5, 19 & 21	B-35
V	299	2	PLATE, 1/2 THK	MIL-S-22698	STEEL	–	TYPE 1, CLASS A, ALTERNATE MATERIAL ASTM A36/A36M	C-35
V	300	2	BAR, 1/2 THK	MIL-S-22698	STEEL	–	TYPE 1, CLASS A, ALTERNATE MATERIAL ASTM A36/A36M	C-35
V	301	2	PLATE, 1/4 THK	MIL-S-22698	STEEL	–	TYPE 1, CLASS A, ALTERNATE MATERIAL ASTM A36/A36M	C-35
V	302	2	LABEL, PLATE, .02 THK	COML	ALUMINUM	–	SEE NOTES 5, 19 & 21	B-35
P	303	1	TEST FIXTURE	–	–	–	C/O PC 304 & 305	C-39
T	304	1	PLATE, 1 5/8 THK	MIL-S-22698	STEEL	–	TYPE 1, CLASS A, ALTERNATE MATERIAL ASTM A36/A36M	C-39
R	305	1	PADEYE, 1/2 THK	MIL-S-22698	STEEL	–	TYPE 1, CLASS A, ALTERNATE MATERIAL ASTM A36/A36M	C-39
R	306	4	BOLT, HEX HD, 3/8-16 UNC-2A X 1 3/4 LG	MS90725-65	STEEL	5305-00-821-3869	–	B-35
V	307	4	NUT, PLAIN HEX, 3/8-16 UNC-2B	MS16285-3	STEEL	9Z5310-01-187-9561	–	B-35
V	308	8	WASHER, FLAT	MS27183-60	STEEL	9Z5310-00-186-7411	–	B-35
P	309		SUPPORT LEG	–	–	–	C/O PC 310-312, 317, 318, 321 & 324	C-54
P	310	1	SUPPORT LEG, STBD 4 X 8 X 54 1/2 LG	QQ-A-250/6	AL-ALY	–	ALUMINUM ALLOY 5086 OR STRONGER, SEE NOTE 36	A-53
P	311	1	SUPPORT LEG, PORT 4 X 8 X 54 1/2 LG	QQ-A-250/6	AL-ALY	–	ALUMINUM ALLOY 5086 OR STRONGER, SEE NOTE 36	D-53
P	312	8	SCREW, HEX HD OR CAP, 3/4-10 UNC-2A X 2 LG	QQ-N-281	NI-CU	–	CLASS A, FF-S-86, TYPE IV OR MIL-S-1222, GRADE 8	C-54
T	~~313~~	~~1~~	~~END TEST CAP, 6 X 6 X 11 3/4 LG~~		~~STEEL~~		~~ANY GRADE NEEDED FOR WEIGHT TEST~~	~~B 53~~
T	~~314~~	~~1~~	~~END TEST CAP, 6 X 6 X 1 1/2 LG~~		~~STEEL~~		~~ANY GRADE NEEDED FOR WEIGHT TEST~~	~~F 53~~

SIZE	CAGE NO.	WT GRP	NAVSEA DRAWING NO.	REV
B	53711	904	4398614	V
SCALE – NONE			SHEET 18	

LIST OF PARTS FOR ONE ASSEMBLY (CONTD)

REV	ITEM NO.	QTY REQD	DESCRIPTION	MATERIAL SPECIFICATIONS	MATERIAL REQUIRED	NSN OR MANUF PART NO.	REMARKS	ZONE
T	~~315~~	~~2~~	~~BOLT, HEX HD, 1 1/2-6 UNC-2A X 10 LG~~	~~QQ-N-281~~	~~NI-CU~~		~~ANY GRADE~~	
T	~~316~~	~~2~~	~~NUT, HEX, 1 1/2-6 UNC-2B~~	~~QQ-N-281~~	~~NI-CU~~		~~ANY GRADE~~	
P	317	1	LIFTING BLOCK, STBD, 2 X 6 X 22 3/4 LG	QQ-A-250/6	AL-ALY	–	5083 OR STRONGER, SEE NOTES 31 & 35	A-54
T	318	1	LIFTING BLOCK, PORT, 2 X 6 X 22 3/4 LG	QQ-A-250/6	AL-ALY	–	5083 OR STRONGER, SEE NOTES 31 & 35	E-54
V	319	4	INSERT, HELICOIL, 5/8-11UNC X 1 1/4 LG	–	CRES	–	SEE NOTE 31	VAR
V	320	8	INSERT, HELICOIL, 3/4-10UNC X 1 1/4 LG	–	CRES	–	SEE NOTE 31	VAR
P	321	16	WASHER, SPECIAL	MIL-S-22698	STEEL	–	–	E-53
T	~~322~~	~~1~~	~~TEST BLOCK, 3 X 6 X 24~~		~~STEEL~~		~~ANY GRADE, SEE NOTES 32 & 34~~	~~B-54~~
T	~~323~~	~~2~~	~~SUPPORT PLATE, 1 X 6 X 24~~		~~FIBERGLASS~~		~~ANY GRADE, SEE NOTES 32 & 35~~	~~D-54~~
V	324	16	SCREW, CAP, SKT HD, 3/4-10 UNC-2A X 4 1/2 LG	QQ-N-281	NI-CU	–	–	C-54
U	325	1	ASSEMBLY 325, ~~LIFTING CLAMP~~ SNORKEL INDUCTION PIPE CLAMP	–	–	3940-01-537-4708	C/O PC 22, 24, 25, 26, 60, 62, 66 & 326-329, STAMP IAW C-23 & NOTES 5, 9 ~~& 12~~	C-23
R	326	2	CLAMP HALF, 3/8 FB	MIL-S-22698	STEEL	–	TYPE 1, CLASS A, ALTERNATE MATERIAL ASTM A36/A36M	A-55
R	327	4	GUSSET, 3/8 PL	MIL-S-22698	STEEL	–	TYPE 1, CLASS A, ALTERNATE MATERIAL ASTM A36/A36M	A-55
P	~~328~~	~~1~~	~~BOLT, HEX HD, 5/8-11 UNC-2A X 3 1/2 LG~~	~~MS90725-170~~	~~STEEL~~	~~5305-00-724-5936~~		~~A-55~~
R	329	1	SPREADER BAR, 3/8 FB	MIL-S-22698	STEEL	–	TYPE 1, CLASS A, ALTERNATE MATERIAL ASTM A36/A36M	B-55
V	330	1	ASSY 330, BPS-16 RADAR MAST FIXTURES	–	–	3940-01-537-6356	C/O PC ~~331, 332,~~ 333, ~~350 &~~ 353-365 & 391	SH 56
T	331	1	~~LUG~~ DISK	MIL-S-22698	STEEL	–	GRADE DH36, CLASS U	B-56
T	332	1	~~DISK~~ LUG	MIL-S-22698	STEEL	–	GRADE DH36, CLASS U	B-56
T	333	4	SLEEVE, ~~1 1/2 OD X .156 THK WALL~~	ASTM A519	STEEL	–	GRADE 1018, COLD DRAWN OR EQUAL	A-56
R	334	1	ASSEMBLY 334, LIFTING CLAMP	–	–	3940-01-537-6352	C/O PC 16, 17, 23, 27-30, 53, 54, 60, 62 & 65, DIM AND STAMP IAW D-23 & NOTES 5, 19 & 21	D-23
R	~~335~~	~~1~~	~~ASSEMBLY 335, LIFTING CLAMP~~				~~C/O PC 14, 23-26, 35, 36, 60, 62 & 65, DIM AND STAMP IAW E-23 & NOTES 5, 19 & 21~~	~~E-23~~
T	~~336~~	~~1~~	~~ASSEMBLY 336, LIFTING CLAMP~~			~~3940-01-464-4922~~	~~C/O PC 14, 23-26, 35, 36, 60, 62 & 65, DIM AND STAMP IAW F-23 & NOTES 5, 19 & 21~~	~~F-23~~
P	337	1	PERISCOPE, T-BAR ASSEMBLY	–	–	–	C/O PC 163, 164, 166, 167	D-51

CONTD ON SHEET 70

SIZE	CAGE NO.	WT GRP	NAVSEA DRAWING NO.	REV
B	53711	904	4398614	V
SCALE – NONE			SHEET 19	

ASSEMBLY 1
■ ■-4398614-□-1
VLF/UHF/IFF & D/F LIFTING CLAMP
OE-158
TESTED AT 4,000 LBS DATE _____

STA	"X" FROM "O" REF	"Y" INSIDE HALF BREADTH
1	.078	.578
2	.188	.859
3	.281	1.047
4	.438	1.328
5	.641	1.609
6	1.078	2.125
7	1.516	2.547
8	1.953	2.875
9	2.813	3.438
10	3.938	3.984
11	5.031	4.344
12	7.203	4.688
13	9.688	4.656
14	11.625	4.484
15	13.813	4.125
16	16.000	3.594
17	18.203	2.953
18	19.328	2.563
19	20.422	2.094
20	21.517	1.484
21	22.094	1.094
22	22.484	.703

LTR	DIM	LTR	DIM
A	22.750	F	2.00
B	1.38	G	1.13
C	2.000		
D	1.188		
E	4.00		

A-20
A-24

ASSEMBLY 2, 348* LIFTING CLAMP
■ ■-4398614-□-2 FOR ~~VLF,~~ PERIS, ~~UHF/IFF, BRN 3, BRQ 19, BRA 9, 15, 19, 21, 34,~~ NAVSAT, BRD-7, OE-207, -538, ~~-158,~~ -592
TESTED AT 8,000 LBS DATE _____

STA	"X" FROM "O" REF	"Y" INSIDE HALF BREADTH
1	.359	1.219
2	.578	1.594
3	.781	1.906
4	1.297	2.516
5	1.828	3.031
6	2.344	3.438
7	3.391	4.109
8	4.703	4.719
9	6.000	5.094
10	7.250	5.344
11	8.641	5.484
12	10.188	5.563
13	11.250	5.531
14	13.875	5.297
15	16.484	4.875
16	19.109	4.281
17	21.734	3.500
18	23.047	3.047
19	24.359	2.500
20	25.672	1.813
21	26.359	1.313

LTR	DIM	LTR	DIM
A	27.063	F	2.00
B	1.38	G	1.13
C	2.281		
D	1.578		
E	4.00		

B-20
(SEE NOTE 26)
A-24

ASSEMBLY 4
■ ■-4398614-□-4
~~AN/BQR 19 &~~ AN/BRD-7 (INNER MAST)
LIFTING CLAMP
TESTED AT 2,000 LBS DATE _____

STA	"X" FROM "O" REF	"Y" INSIDE HALF BREADTH
1	.250	.953
2	.500	1.313
3	.875	1.719
4	1.250	2.031
5	1.625	2.297
6	2.000	2.516
7	2.500	2.750
8	3.000	2.922
9	3.500	3.047
10	4.000	3.141
11	4.500	3.219
12	5.500	3.250
13	6.500	3.172
14	7.625	2.984
15	8.750	2.703
16	9.813	2.359
17	10.875	1.922
18	11.500	1.594
19	12.000	1.219

LTR	DIM	LTR	DIM
A	12.500	F	2.00
B	12.00	G	1.13
C	2.000	H	6.00
D	1.750		
E	4.00		

C-20
(SEE NOTE 26)
C-25

ASSEMBLY 6
■ ■-4398614-□-6
LIFTING CLAMP FOR ~~AN/BRA 34,~~ OE-538, OE-207/BR & OE-592 ANTENNAS
TESTED AT 2,000 LBS DATE _____

STA	"X" FROM "O" REF	"Y" INSIDE HALF BREADTH
1		
2		
3		
4		
5		
6		
7		
8		
9		
10		
11		
12	4.250	4.250
13		
14		
15		
16		
17		
18		
19		
20		
21		

NOTE: FWD HALF (PC 9) IS SEMI-CIRCULAR (4 1/4 RAD) WITH CENTER LOCATED AT STATION 12.

* STRAIGHT LINE CONNECTS TANGENT TO FWD & AFT RADII

LTR	DIM	LTR	DIM
A	13.000	F	2.00
B	6.00	G	1.13
C	4.250*		
D	1.750*		
E	4.00		

D-20
(SEE NOTE 26)
A-25

* ASSY 348 IS FOR SEAWOLF CLASS PERISCOPE FAIRING.

ASSY ~~1,~~ 2, 4, 6 & 348
DIMENSIONAL TABLES

SIZE	CAGE NO.	WT GRP	NAVSEA DRAWING NO.	REV
B	53711	904	4398614	V
SCALE - NONE			SHEET 20	

ASSEMBLY 21
■ ■ - 4398614-□-21
ESM ROUND MAST LIFTING CLAMP
TESTED AT 12.000 LBS DATE_____

LTR	DIM	LTR	DIM
A	9.750	E	6.00
B	2.00	F	3.00
C	2.50	G	1.25
D	1.00	H	4.25

A-21
B-25

ASSEMBLY 47
■ ■-4398614-□-47
7.50 DIAMETER PERISCOPE
LIFTING CLAMP
TESTED AT 6,000 LBS DATE _____

NOTE: CLAMP IS MANUFACTURED FOR USE WITH CYLINDRICAL PERISCOPE. SEE APPROPRIATE ASSY. NO. AND DIMENSIONAL TABLE BELOW.

LTR	DIM	LTR	DIM
A	8.000	E	6.00
B	4.00	F	3.00
C	2.25	G	1.13
D	.88	H	4.25

C-21
B-25

ASSEMBLY 42
■ ■-4398614-□-42
AN/BRD-~~18~~-7, ECM/DF, 9"DIA CYLINDRICAL
INNER MAST LIFTING CLAMP
TESTED AT 2,600 LBS. DATE_____

STA	"X" FROM "0" REF	"Y" INSIDE HALF BREADTH
1		
2		
3		
4		
5		
6		
7		
8		
9		
10		
11		
12		
13		
14		
15		
16		
17		
18		
19		

NOTE: CLAMP IS MANUFACTURED FOR USE WITH CYLINDRICAL INNER MAST. SEE APPROPRIATE ASSY NO. AND DIMENSIONAL TABLE BELOW

LTR	DIM	LTR	DIM
A	9.500	F	2.00
B	7.00	G	1.13
C	2.25	H	2.25
D	.88		
E	4.00		

B-21
B-25

ASSY 48, SSN637 CL, SHORT HULL
■ ■-4398614-□-48
SNORKEL MAST LIFTING CLAMP
WEIGHT TESTED AT 11,000 LBS DATE_____
HOLDING CAPACITY TESTED AT 6,000 LBS DATE_____

STA	"X" FROM "0" REF	"Y" INSIDE HALF BREADTH
1	1.031	7.500
2	2.500	7.438
3	6.062	7.125
4	9.625	6.531
5	13.218	5.750
6	16.812	4.656
7	18.593	4.063
8	20.312	3.313
9	22.093	2.344
10	23.125	1.594
11	23.750	.938

NOTE: FORWARD SECTION OF PC 53 & 54 IS SEMI-CIRCULAR (7 1/2 RAD) WITH CENTER LOCATED AT STATION "0"

LTR	DIM	LTR	DIM
A	31.500	E	6.50
B	———	F	3.25
C	7.500	G	2.00
D	1.813	H	65°
		J	56°
		K	6.25
		L	6.25

D-21
A-27

ASSEMBLY 338, SSN 688 CLASS
■ ■-4398614-□-338
SNORKEL MAST LIFTING CLAMP
TESTED AT 12,000 LBS DATE _____

STATION	"X" FROM	"Y" INSIDE HALF BREADTH
-1	2.375	9.219
0	0.000	9.219
1	2.375	9.219
2	3.982	9.188
3	7.937	8.750
4	11.862	8.063
5	15.818	7.031
6	19.773	5.781
7	21.751	4.938
8	23.729	4.031
9	25.708	2.844
10	26.759	1.938
11	27.688	0

E-21
(SEE NOTE 26)
A-71

ASSEMBLY 370
■ ■-4398614-□-370
BPS-16 RADAR LIFTING CLAMP
TESTED AT 4,100 LBS DATE _____

LTR	DIM	LTR	DIM
A	8.25	E	6.00
B	6.00	F	3.00
C	2.25	G	1.13
D	.88	H	4.25

F-21
B-25

ASSY ~~21~~, ~~42~~, 47, ~~48~~, 338 & 370
DIMENSIONAL TABLES

SIZE	CAGE NO.	WT GRP	NAVSEA DRAWING NO.	REV
B	53711	904	4398614	V
SCALE - NONE			SHEET 21	

ASSEMBLY 49
■ ■-4398614-□-49
ESM LIFTING CLAMP
TESTED AT 12,000 LBS DATE_____

STA	"X" FROM "0" REF	"Y" INSIDE HALF BREADTH
1	.359	1.219
2	.578	1.594
3	.781	1.906
4	1.297	2.516
5	1.828	3.031
6	2.344	3.438
7	3.391	4.109
8	4.703	4.719
9	6.000	5.094
10	7.250	5.344
11	8.641	5.484
12	10.188	5.563
13	11.250	5.531
14	13.875	5.297
15	16.484	4.875
16	19.109	4.281
17	21.734	3.500
18	23.047	3.047
19	24.359	2.500
20	25.672	1.813
21	26.359	1.313

LTR	DIM	LTR	DIM
A	27.063	E	6.50
B	———	F	3.25
C	2.281	G	2.00
D	1.578		

A-22
A-26

ASSEMBLY 50
■ ■-4398614-□-50
7 1/2 DIA RADAR ANTENNA
LIFTING CLAMP
TESTED AT 4,000 LBS DATE_____

NOTE: CLAMP IS MANUFACTURED FOR USE WITH CYLINDRICAL RADAR ANT. MAST. SEE APPROPRIATE ASSY. NO. AND DIMENSIONAL TABLE BELOW

LTR	DIM	LTR	DIM
A	8.000	E	6.00
B	6.00	F	3.00
C	2.25	G	1.13
D	.88	H	4.25

B-22
B-25

ASSEMBLY 51
■ ■-4398614-□-51
3 DIA RADAR ANTENNA
LIFTING CLAMP
TESTED AT 3,000 LBS DATE _____

NOTE: CLAMP IS MANUFACTURED FOR USE WITH CYLINDRICAL RADAR ANT. MAST. SEE APPROPRIATE ASSY. NO. AND DIMENSIONAL TABLE BELOW

LTR	DIM	LTR	DIM
A	3.500	E	6.00
B	6.00	F	3.00
C	2.25	G	1.13
D	.88	H	4.25

C-22
B-25

ASSEMBLY 52, SSN 688 CLASS
■ ■-4398614-□-52
SNORKEL MAST LIFTING CLAMP
TESTED AT 12,000 LBS DATE _____

NOTE: THE SECTION OF PC 53 & 54 FORWARD OF STATION -1 "HAS INSIDE RADIUS OF 9 1/2, WITH CENTER LOCATED AT STATION "0"

STA	"X" FROM "0" REF	"Y" INSIDE HALF BREADTH
-1	2.375	9.219
0	0.000	9.219
1	2.375	9.219
2	3.982	9.188
3	7.937	8.750
4	11.862	8.063
5	15.818	7.031
6	19.775	5.781
7	21.751	4.938
8	23.729	4.031
9	25.708	2.844
10	26.759	1.938
11	27.437	1.031

LTR	DIM	LTR	DIM
A	37.188	E	6.50
B	———	F	3.25
C	9.500	G	2.00
D	2.000	H	60°
		J	45°
		K	9.00
		L	7.19

D-22
A-27

ASSEMBLY 93, SSN 637 CL, LONG HULL
■ ■-4398614-□-93
SNORKEL MAST LIFTING CLAMP
WEIGHT TESTED AT 11,000 LBS DATE_____
HOLDING CAPACITY TESTED AT 6,000 LBS DATE_____

NOTE: FORWARD SECTION OF PC 53 & 54 IS SEMI-CIRCULAR (7 1/2 RAD) WITH CENTER LOCATED AT STATION "0"

STA	"X" FROM "0" REF	"Y" INSIDE HALF BREADTH
1	1.031	7.500
2	2.500	7.438
3	6.062	7.000
4	9.625	6.344
5	11.421	5.938
6	13.218	5.460
7	15.015	4.906
8	16.812	4.281
9	18.593	3.584
10	20.312	2.750
11	22.312	1.182

LTR	DIM	LTR	DIM
A	30.250	E	6.50
B	———	F	3.25
C	7.500	G	2.00
D	1.813	H	55°
		J	45°
		K	7.00
		L	6.00

E-22
A-27

ASSY ~~49~~, ~~50~~, 51, ~~52~~ & ~~93~~
DIMENSIONAL TABLES

SIZE	CAGE NO.	WT GRP	NAVSEA DRAWING NO.	REV
B	53711	904	4398614	T
SCALE – NONE			SHEET 22	

ASSEMBLY 202 SSBN 640 CL
■ ■-4398614-□-202 SNORKEL MAST
LIFTING CLAMP
TESTED AT 20,000 LBS DATE _____

STA	"X" FROM "O" REF	"Y" INSIDE HALF BREADTH
1	.750	2.500
2	.938	2.875
3	1.156	3.250
4	2.406	4.844
5	3.438	5.844
6	4.750	6.938
7	6.219	7.875
8	8.016	8.844
9	10.063	9.688
10	12.906	10.469
11	14.906	10.844
12	16.438	11.000
13	20.938	11.250
14	21.938	11.250
15	23.688	11.188
16	26.188	11.063
17	31.563	10.375
18	35.719	9.500
19	39.281	8.563
20	42.281	7.688
21	44.906	6.875
22	47.656	5.938
23	50.094	4.906
24	52.125	3.906
25	53.625	2.938
26	54.500	2.156

A-23
A-28

ASSEMBLY 202 DIMENSIONAL TABLE

LTR	DIM	LTR	DIM
A	55.500	F	5.38
B	4.000	G	2.000
C	5.188		
D	2.688		
E	10.75		

B-23
A-28

ASSEMBLY 325
■ ■-4398614-□-325
16" DIA SNORKEL INDUCTION
PIPE ~~MAST LIFTING~~ CLAMP
TESTED AT 2600 LBS DATE _____

C-23
A-55

ASSEMBLY 334 SSN 21 CLASS, SSN 774 CLASS
■ ■-4398614-□-334
SNORKEL MAST LIFTING CLAMP
TESTED AT 13,100 LBS DATE _____

STA	"X" FROM "O" REF	"Y" INSIDE HALF BREADTH
0	0	9.800
1	2.360	9.554
2	4.394	9.338
3	6.318	9.167
4	8.218	8.943
5	10.083	8.667
6	11.903	8.343
7	13.665	7.970
8	15.361	7.551
9	16.979	7.089
10	18.510	6.587
11	19.944	6.050
12	21.275	5.478
13	22.492	4.876
14	23.590	4.275
15	24.583	3.674
16	25.564	3.013
17	26.497	2.299
18	26.888	1.931
19	27.213	1.558
20	27.418	1.250

LTR	DIM
A	37.542
B	———
C	9.800
D	———
E	6.50
F	3.25

LTR	DIM
G	2.00
H	45°
J	45°
K	9.00
L	7.19

D-23
(SEE NOTE 26)
B-27

ASSEMBLY 335
■ ■-4398614-□-335
8.00 DIAMETER PERISCOPE
LIFTING CLAMP
TESTED AT 4,000 LBS DATE _____

LTR	DIM	LTR	DIM
A	8.04	E	6.00
B	4.00	F	3.00
C	2.25	G	1.13
D	.88	H	4.25

E-23
B-25

ASSEMBLY 336
■ ■-4398614-□-336
16.50 DIAMETER SNORKEL INDUCTION
PIPE ~~MAST~~ LIFTING CLAMP
TESTED AT 2,600 LBS DATE _____

LTR	DIM	LTR	DIM
A	17.00	E	6.00
B	7.00	F	3.00
C	2.25	G	1.13
D	.88	H	4.25

F-23
B-25

ASSY ~~202~~, 325 & 334, ~~335 & 336~~
DIMENSIONAL TABLES

SIZE	CAGE NO.	WT GRP	NAVSEA DRAWING NO.	REV
B	53711	904	4398614	V
SCALE – NONE			SHEET 23	

* LIFTING LUGS ARE FOR SEAWOLF PERISCOPE FAIRING CLAMP (ASSY 348) ONLY. THEY ARE POSITIONED NORMAL TO THE CLAMP SURFACE CENTERED ON STATION 19.

** IT IS NOT REQUIRED FOR THE SEAWOLF PERISCOPE CLAMP (ASSY 348).

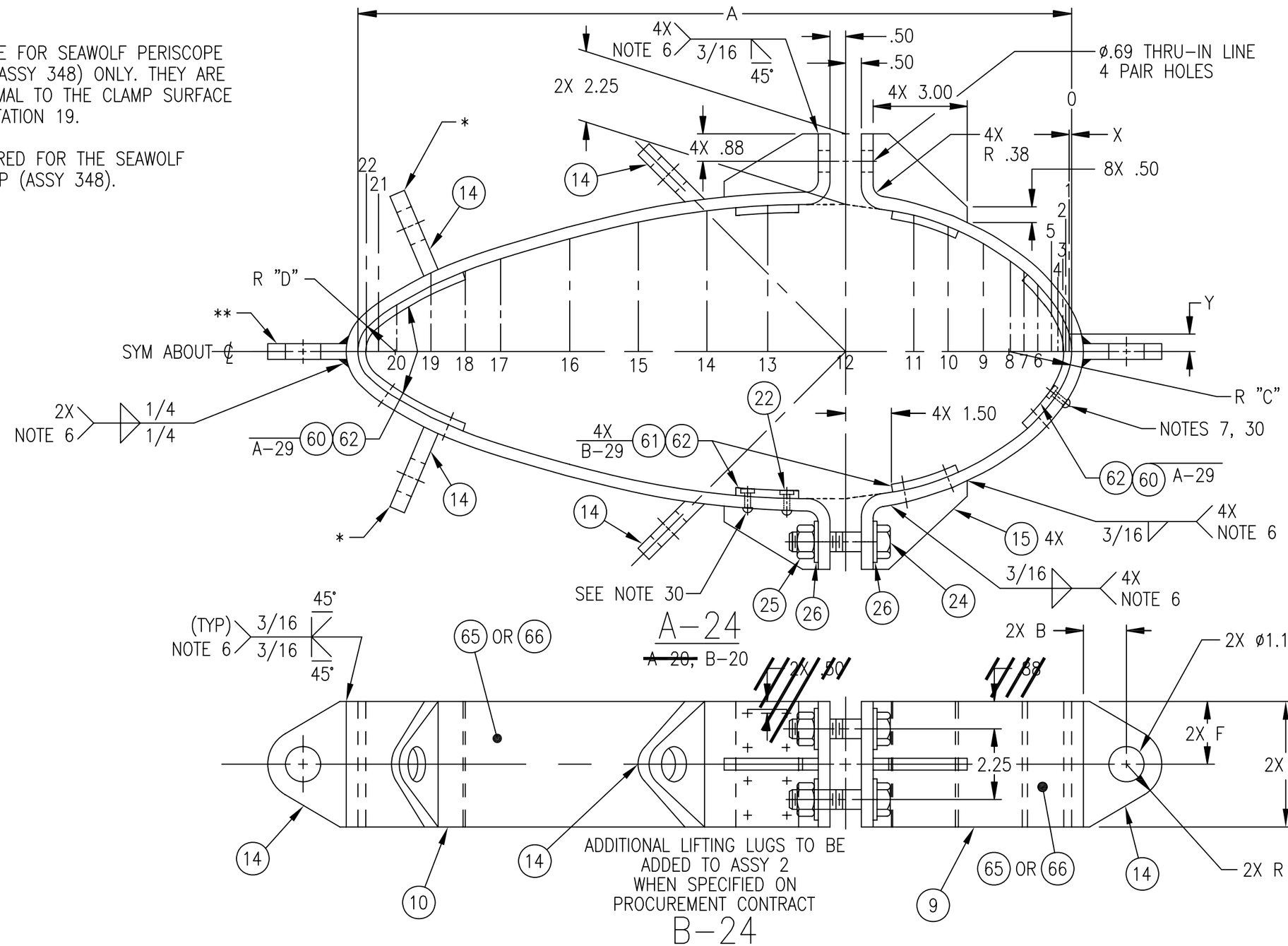

ASSY ~~1~~ 2, 348 – FAIRED CLAMP DETAIL SEE SHEET 4 FOR APPLICATION	SIZE	CAGE NO.	WT GRP	NAVSEA DRAWING NO.	REV
	B	53711	904	4398614	V
	SCALE – NONE			SHEET 24	

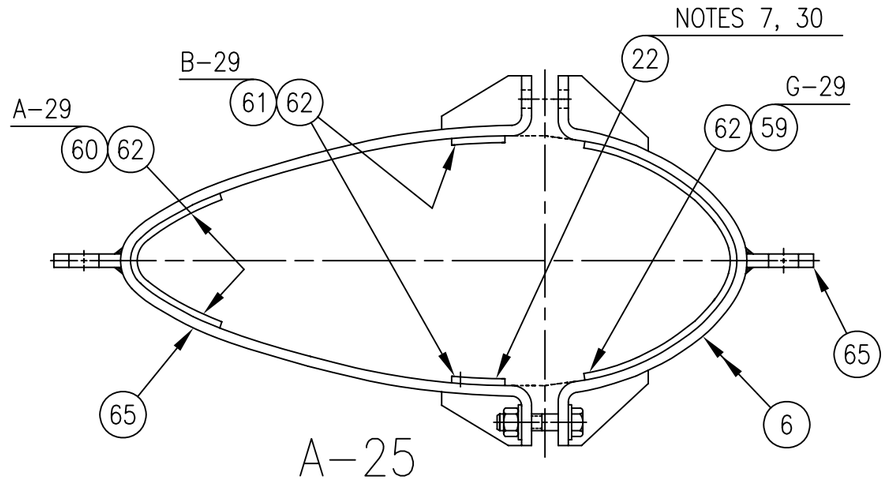

A-25

D-20
ASSY 6 SIMILAR TO ASSY 2,
EXCEPT AS SHOWN

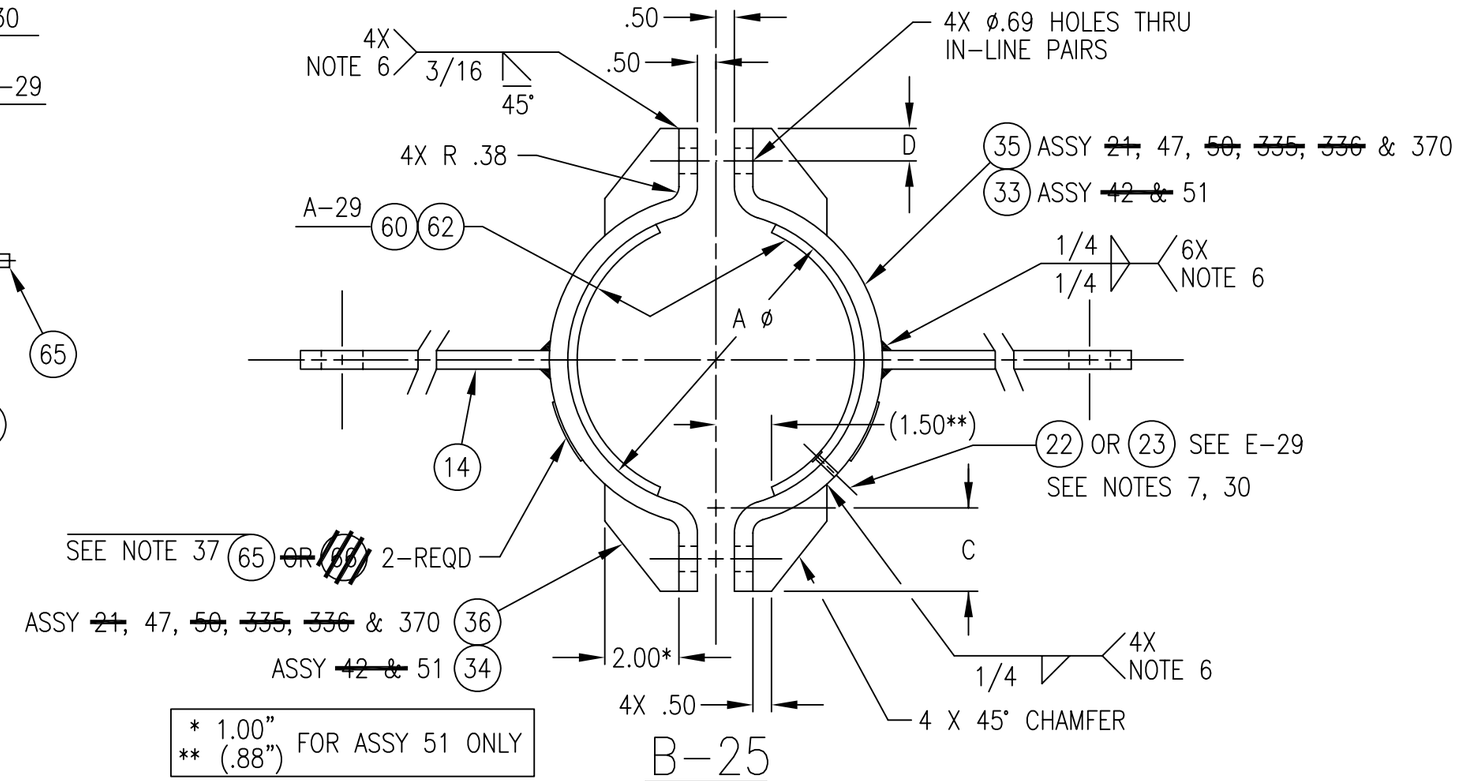

* 1.00"	FOR ASSY 51 ONLY
** (.88")	

B-25

~~A-21~~, ~~B-21~~, C-21, ~~B-22~~, C-22, ~~E-23~~, F-21, ~~F-23~~

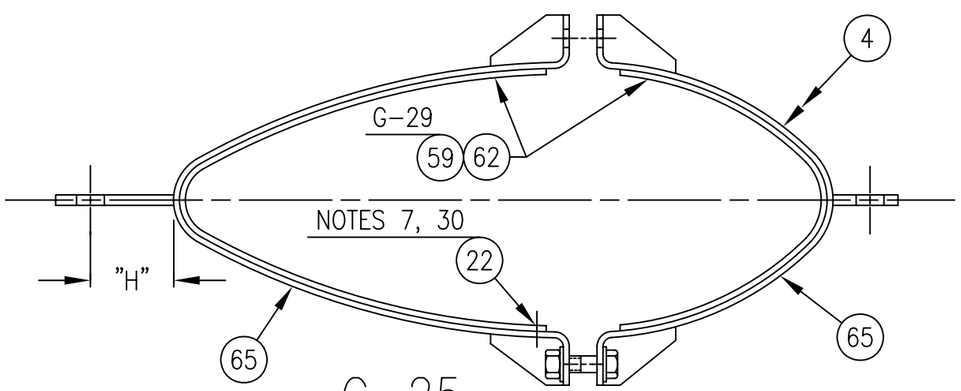

C-25

C-20
ASSY 4 SIMILAR TO ASSY 2,
EXCEPT AS SHOWN

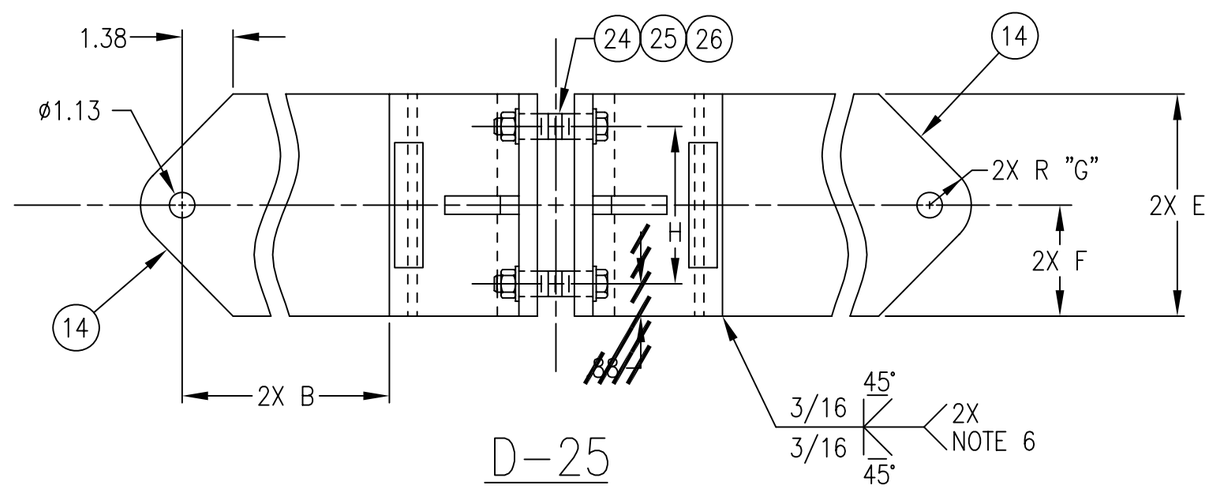

D-25

~~SEE NOTE 37~~

ASSY 4, 6, ~~21~~, ~~42~~, 47, ~~50~~, 51, ~~335~~, ~~336~~ & 370 - LIFTING CLAMPS
SEE SHEET 4 FOR APPLICATION

SIZE	CAGE NO.	WT GRP	NAVSEA DRAWING NO.	REV
B	53711	904	4398614	V
SCALE - NONE			SHEET 25	

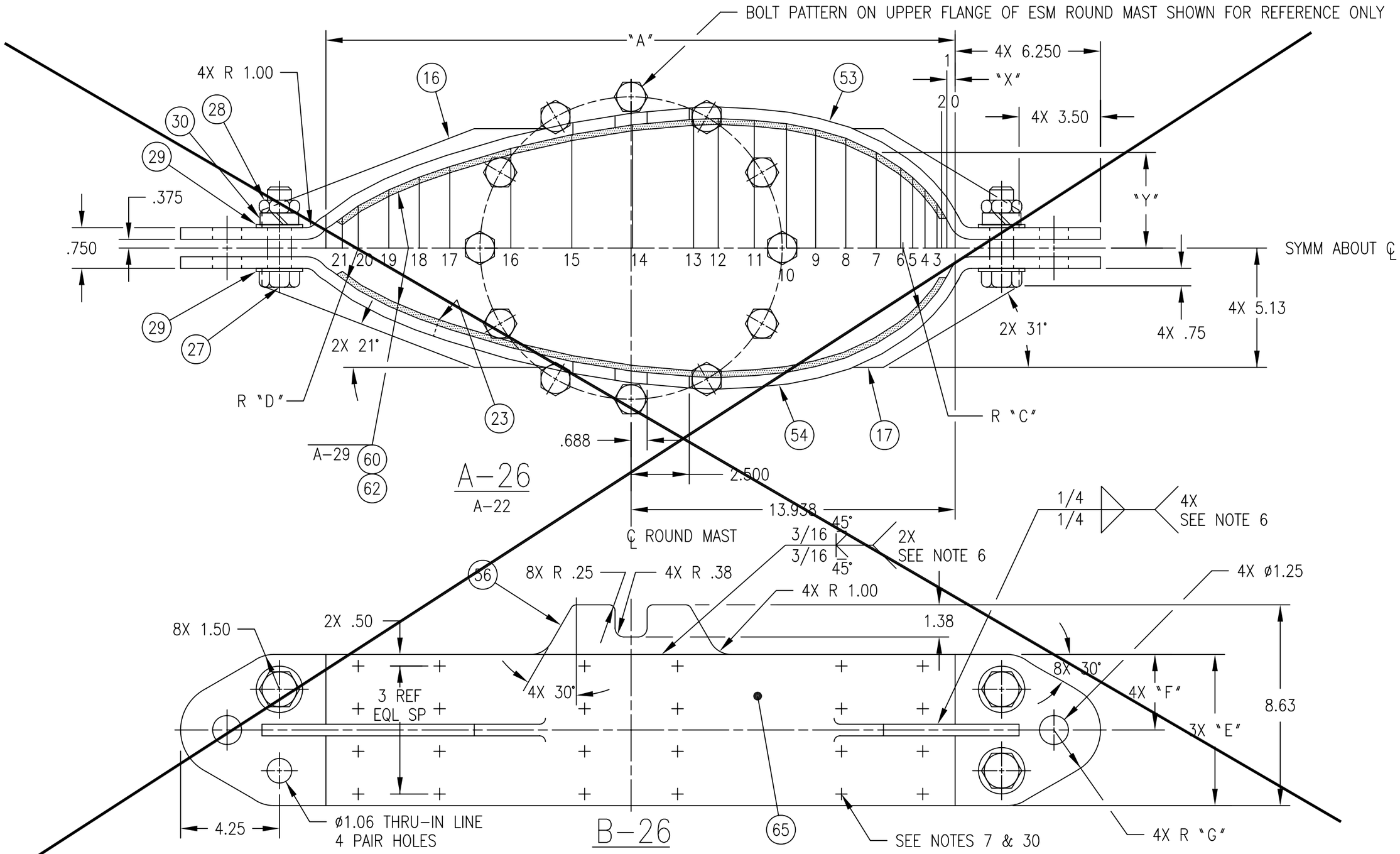

~~ASSY 49 – ESM26 FAIRED MAST CLAMP~~
~~SEE SHEET 4 FOR APPLICATION~~

SIZE	CAGE NO.	WT GRP	NAVSEA DRAWING NO.	REV
B	53711	904	4398614	T
SCALE – 1/4			SHEET 26	

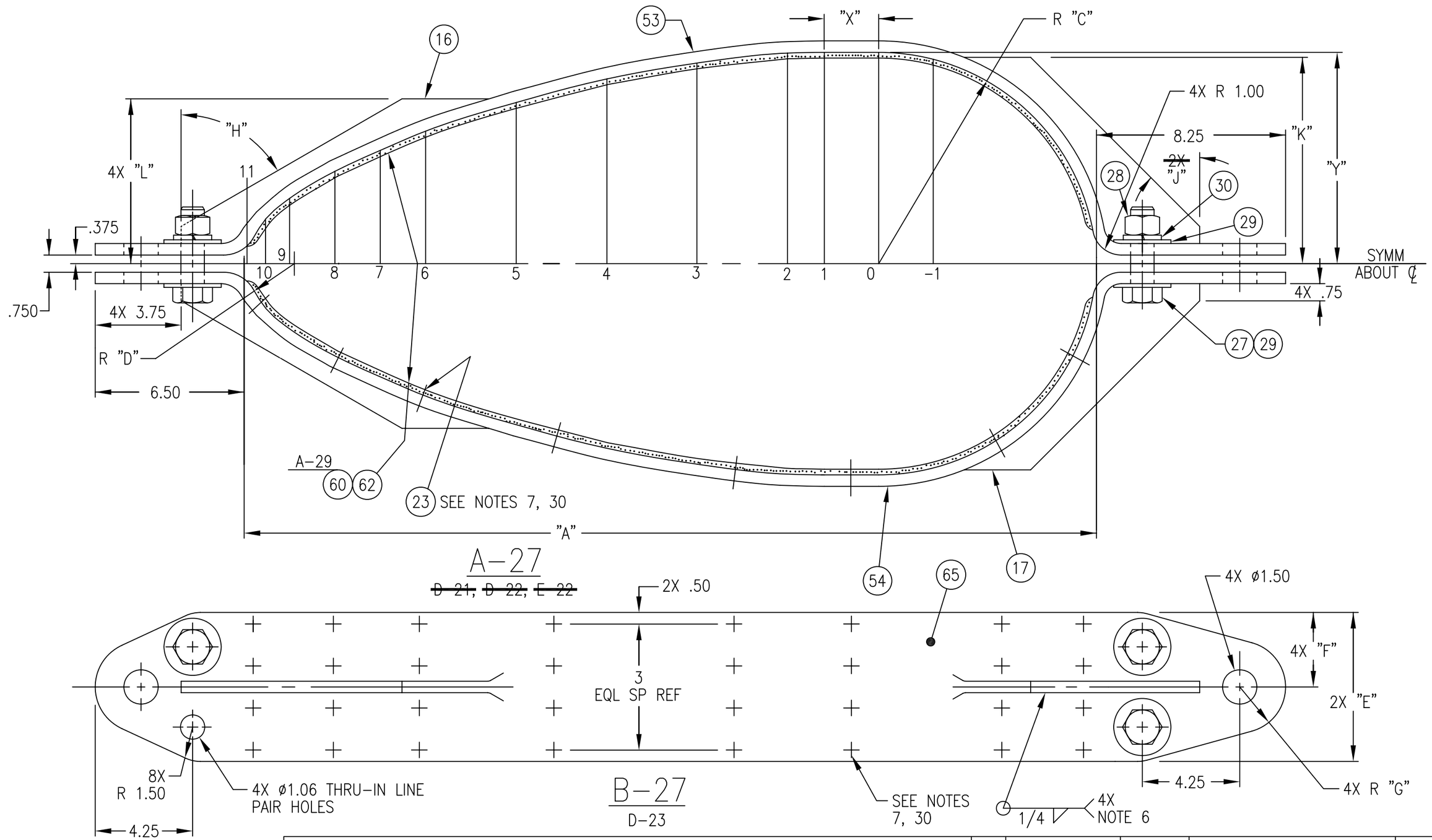

ASSY ~~48, 52, 93~~ & 334 – SNORKEL FAIRED MAST CLAMP
SEE SHEET 4 FOR APPLICATION

SIZE	CAGE NO.	WT GRP	NAVSEA DRAWING NO.	REV
B	53711	904	4398614	U
SCALE – 1/4			SHEET 27	

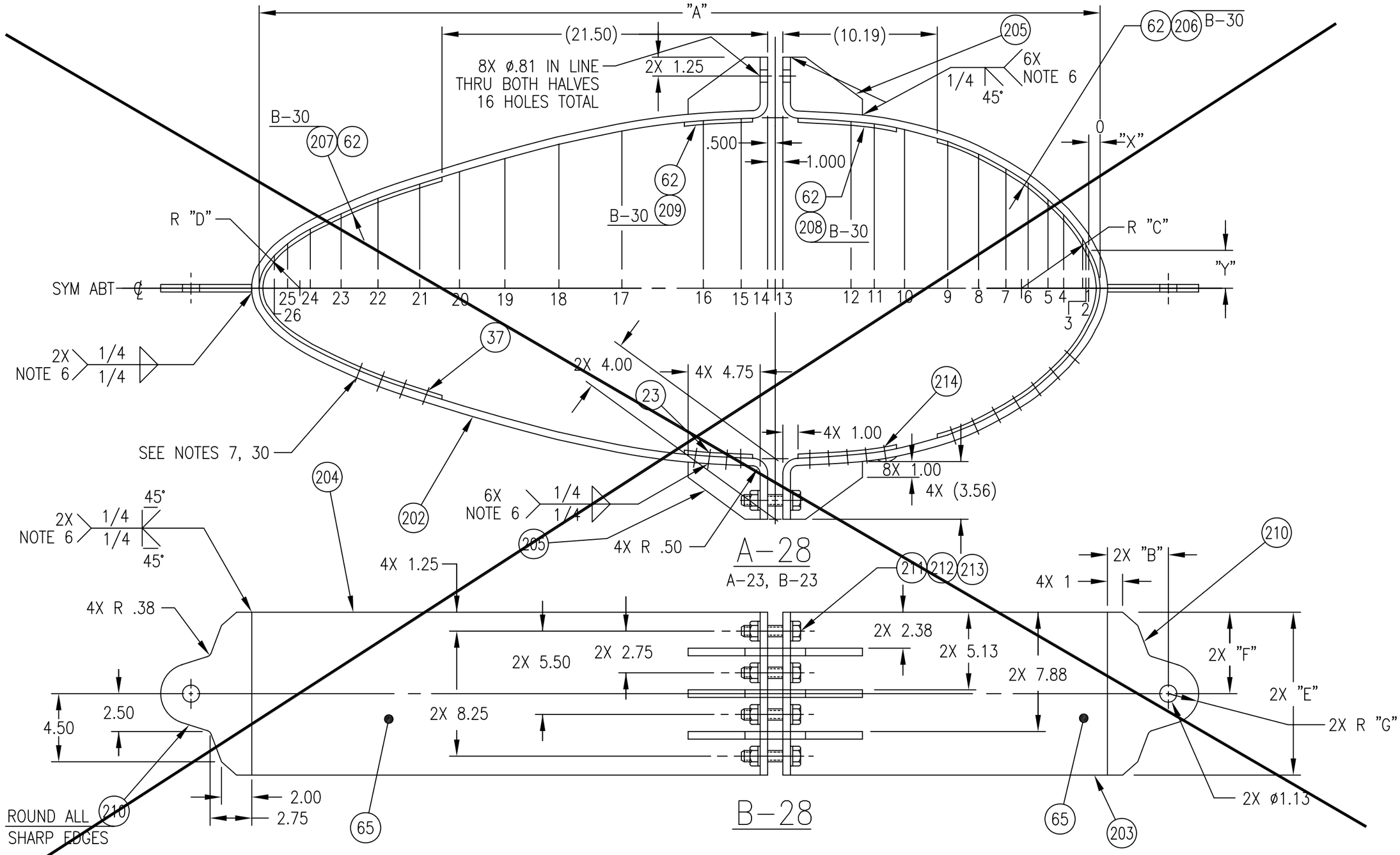

~~ASSY 202 — SNORKEL FAIRED MAST CLAMP~~
~~SEE SHEET 4 FOR APPLICATION~~

SIZE	CAGE NO.	WT GRP	NAVSEA DRAWING NO.	REV
B	53711	904	4398614	S
SCALE – 5/32			SHEET 28	

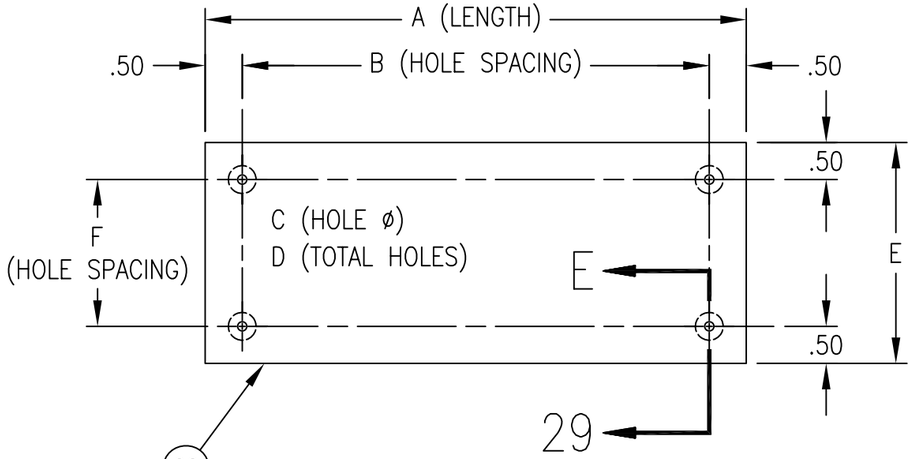

A–29

A–25, ~~A–26,~~ ~~B–26,~~ A–27, ~~A–28,~~ A–49

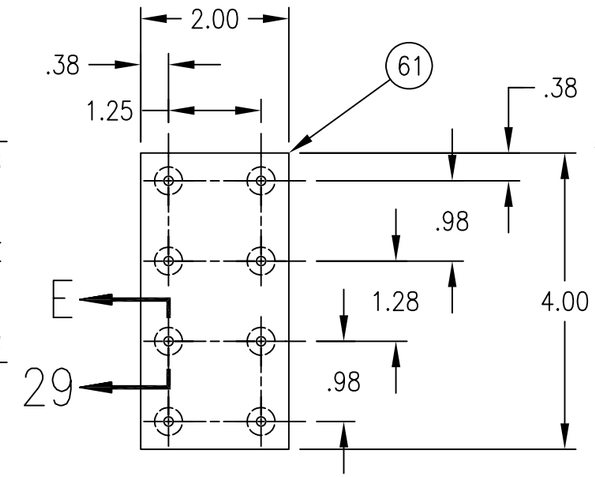

B–29

A–24, A–25

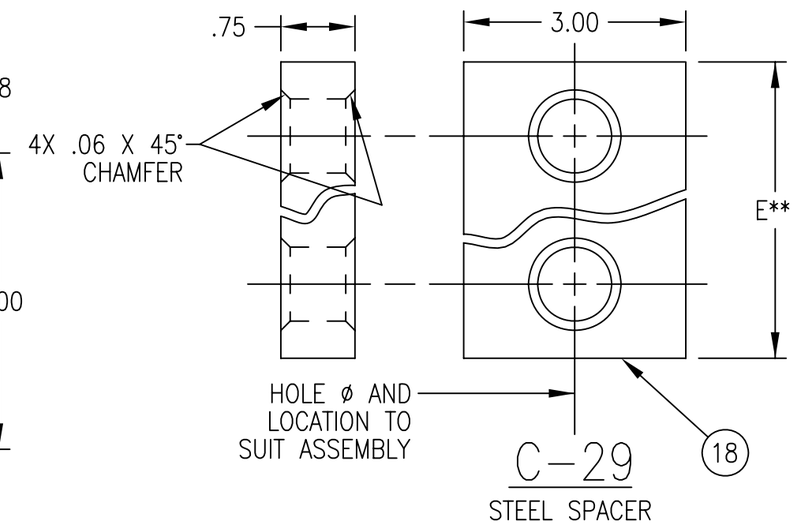

C–29

STEEL SPACER

** E IS GIVEN IN DIMENSIONAL TABLES ON SHEETS 20, 21, 22 AND 23.

LINING TABULATION						
ITEM 60: DIMENSIONS AND DRILLING						
ASSY	A	B	C	D	E	F
~~1~~	~~10.00~~	~~3 SP~~		~~12~~	~~4.00~~	~~2 EQ~~
2, 348	10.00	3 SP		12	4.00	2 EQ
6	10.00	3 SP		12	4.00	2 EQ
~~21~~	~~12.00~~	~~3 SP~~		~~14~~	~~6.00~~	~~2 EQ*~~
~~42~~	~~11.75~~	~~3 SP~~		~~14~~	~~4.00~~	~~2 EQ*~~
47	9.50	3 SP	DETAIL E–29	14	6.00	2 EQ*
~~48~~	~~34.00~~	~~7 SP~~		~~32~~	~~6.50~~	~~3 EQ~~
~~49~~	~~29.00~~	~~5 SP~~		~~24~~	~~6.50~~	~~3 EQ~~
~~50~~	~~9.00~~	~~3 SP~~		~~14~~	~~6.00~~	~~2 EQ*~~
51	3.50	1 SP		8	6.00	2 EQ*
~~52~~	~~43.00~~	~~7 SP~~		~~32~~	~~6.50~~	~~3 EQ~~
~~93~~	~~34.00~~	~~7 SP~~		~~32~~	~~6.50~~	~~3 EQ~~
267	12.00	–	–	–	4.00	–
325	23.75	5 SP		20	6.00	2 EQ*
334	41.00	7 SP		32	6.50	3 EQ
~~335~~	~~10.50~~	~~3 SP~~	DETAIL E–29	~~14~~	~~6.00~~	~~2 EQ*~~
~~336~~	~~25.00~~	~~5 SP~~		~~20~~	~~6.00~~	~~2 EQ*~~
370	10.00	3 SP		14	6.00	2 EQ*

* FOR "F" ONLY; USE 3 EQUAL SPACES AT ENDS ONLY.

D–29

A–29

NO.10 (ø.194) DRILL
HOLES THRU. C'BORE F.S.
ø0.42 TO DEPTH SHOWN.

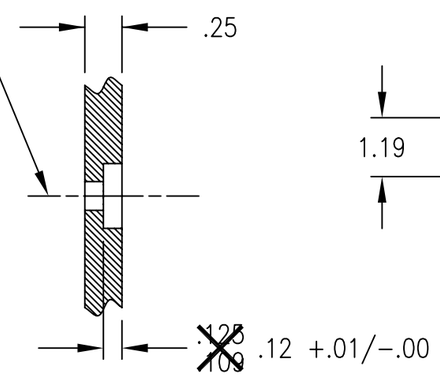

E–29

A–29, B–29, G–29, ~~B–30,~~ A–72, B–72

PC 59 DIMENSIONS AND DRILLING						
ASSY	A	B	C	D	E	F
4	11.00	3 SP	E–29	14	4.00	2 EQ
6	10.00	3 SP	E–29	14	4.00	2 EQ

F–29

G–29

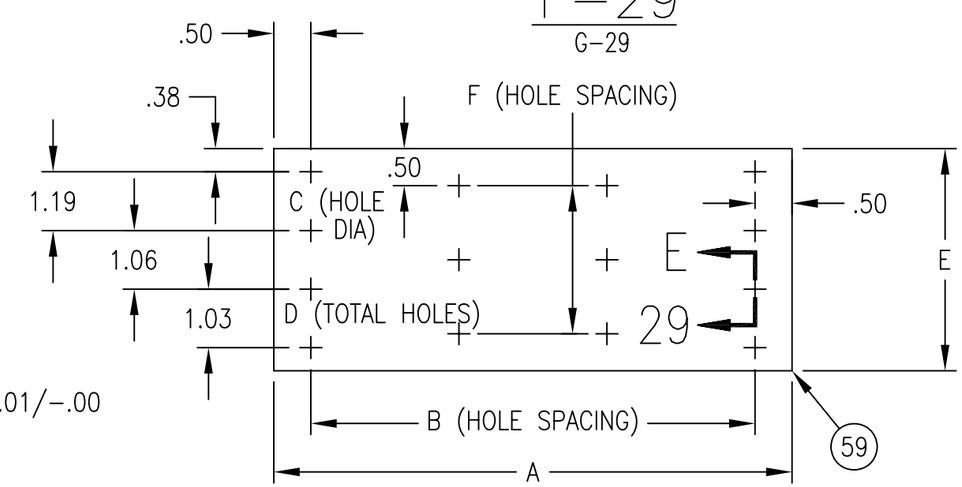

G–29

A–25, C–25

BRAKE LINING
AND SPACER

SIZE	CAGE NO.	WT GRP	NAVSEA DRAWING NO.	REV
B	53711	904	4398614	V
SCALE – NONE			SHEET 29	

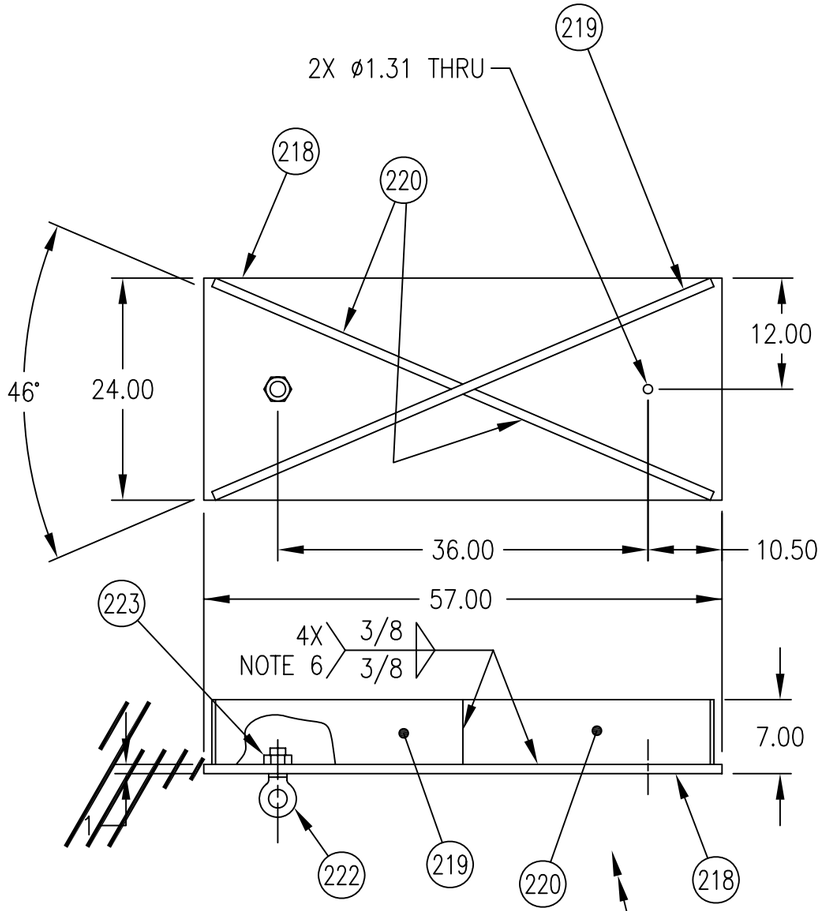

A–30
WEIGHT TEST FIXTURE

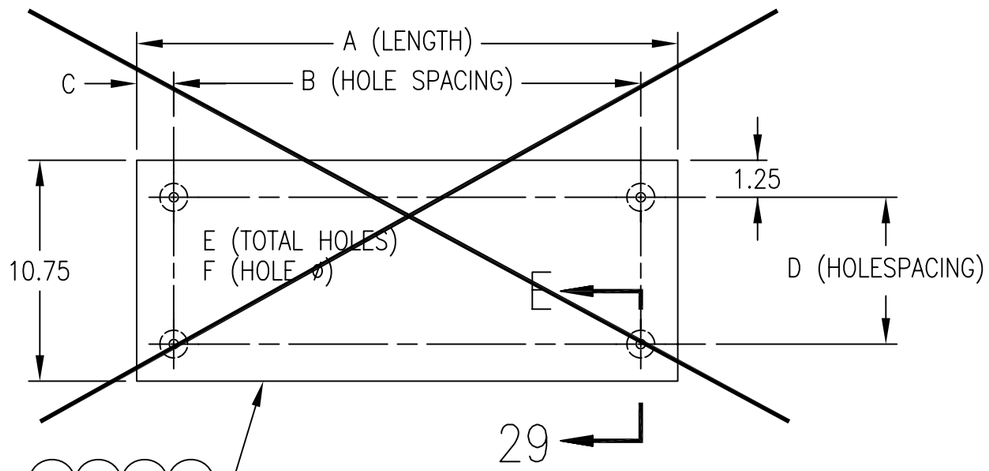

B–30
A–28

DIMENSIONS AND DRILLING						
ITEM NO.	A	B	C	D	E	F
206	31.00	9 SP	0.63	3 EQ	40	DET E–29
207	26.00	9 SP	1.25	3 EQ	40	
208	6.50	9 SP	0.75	3 EQ	16	
209	4.50	9 SP	0.75	3 EQ	12	

C–30
A–28

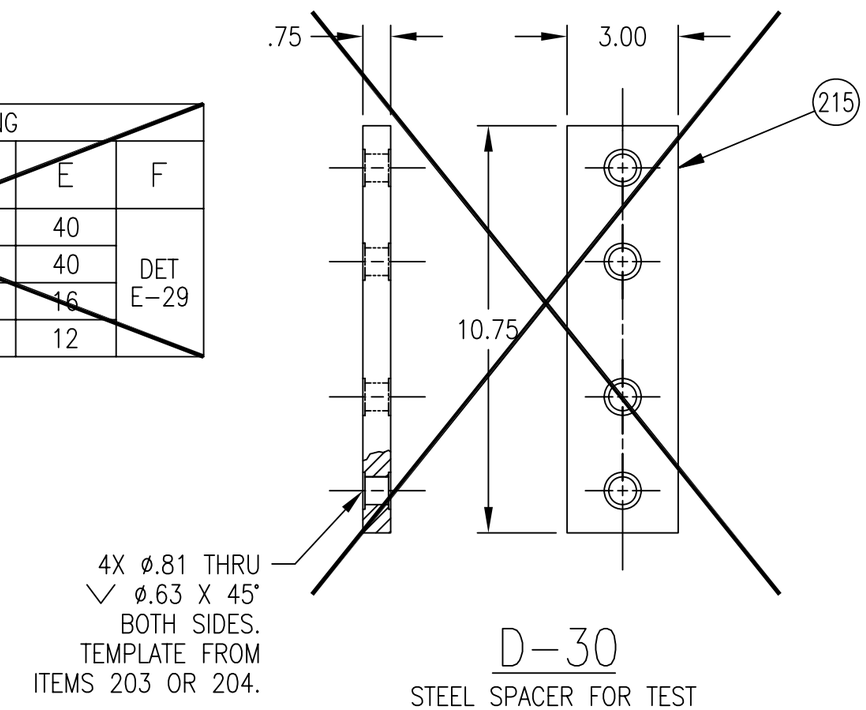

D–30
STEEL SPACER FOR TEST

~~BRAKE LINING AND~~ WEIGHT TEST FIXTURE	SIZE	CAGE NO.	WT GRP	NAVSEA DRAWING NO.	REV
	B	53711	904	4398614	T
	SCALE – NONE			SHEET 30	

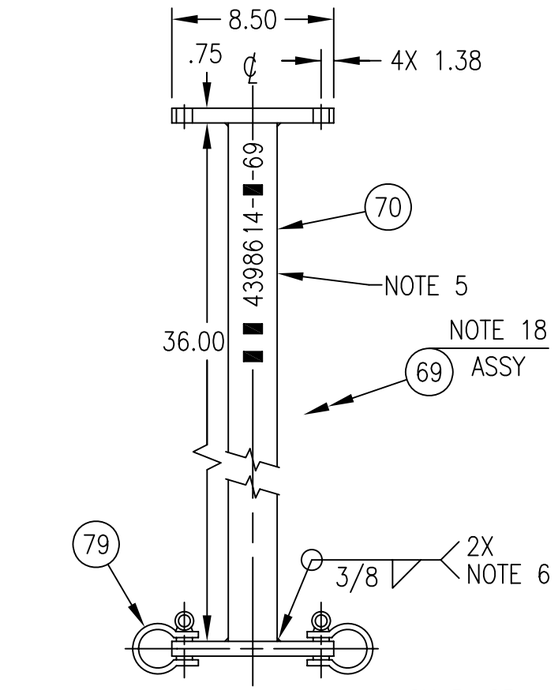

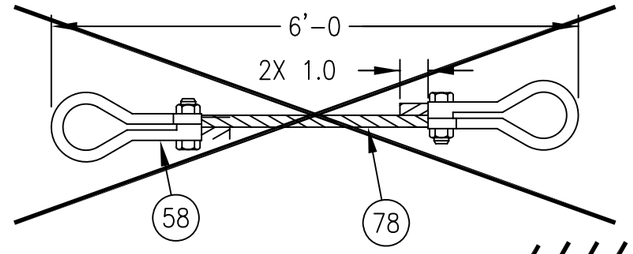

B-31

D-31

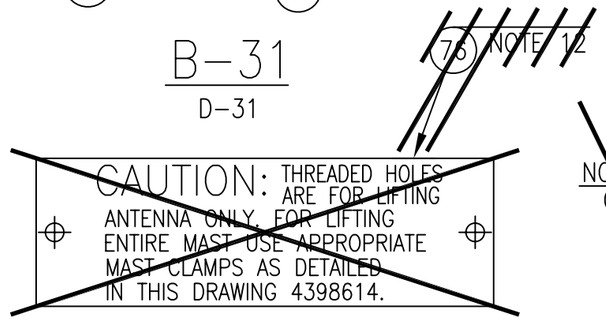

C-31

D-31, E-31

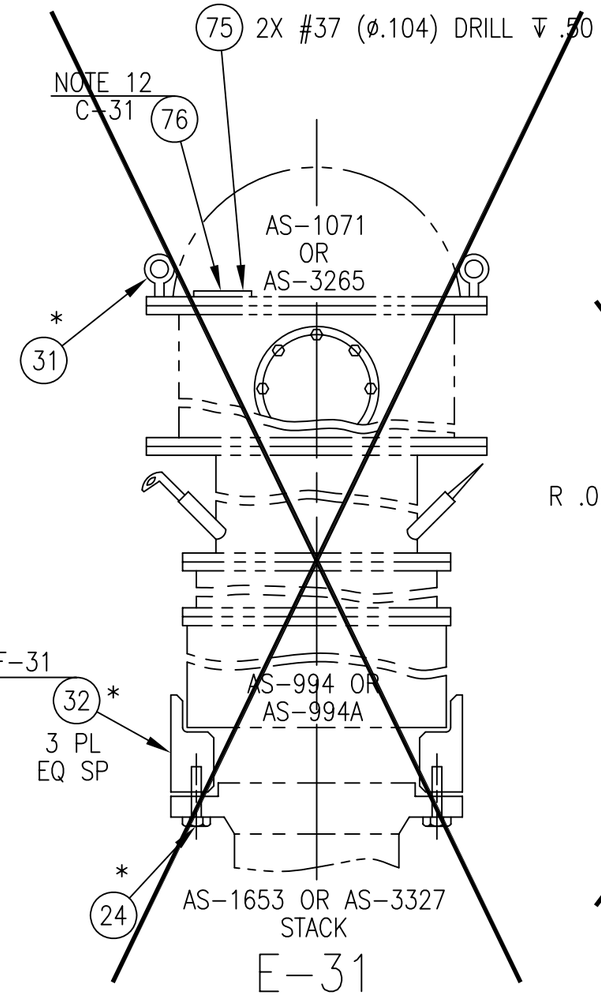

E-31

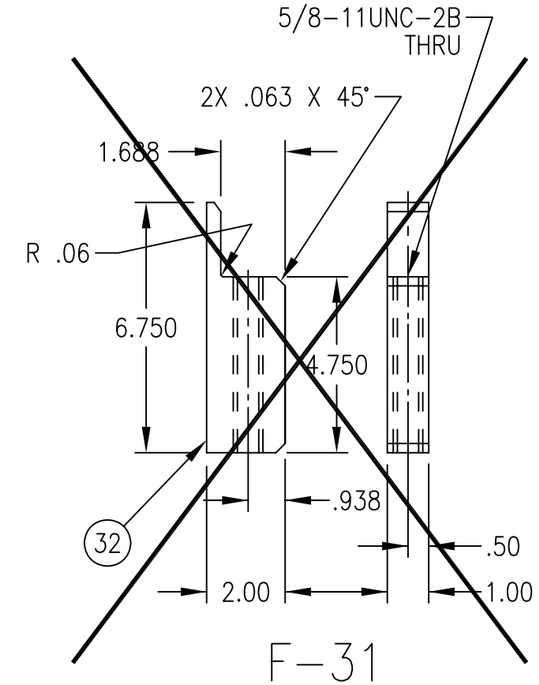

F-31

E-31

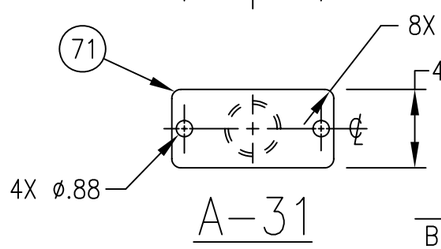

A-31

~~* INSTALLATION AID. ITEM TO BE IN PLACE DURING INSTALLATION OPERATION ONLY.~~

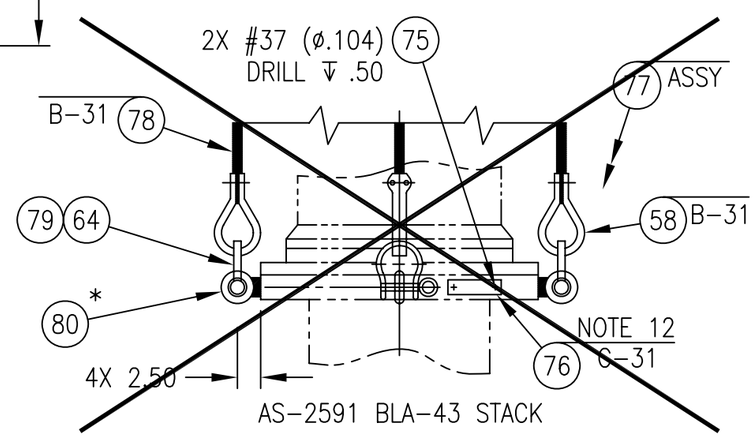

D-31

ASSY 69 SPREADER BAR; ~~ASSY 77 ANTENNA LIFTING SLING AS-2591, BLA-4 AND ESM SAFETY BLOCK~~ 32

SIZE	CAGE NO.	WT GRP	NAVSEA DRAWING NO.	REV
B	53711	904	4398614	T
SCALE – NONE			SHEET 31	

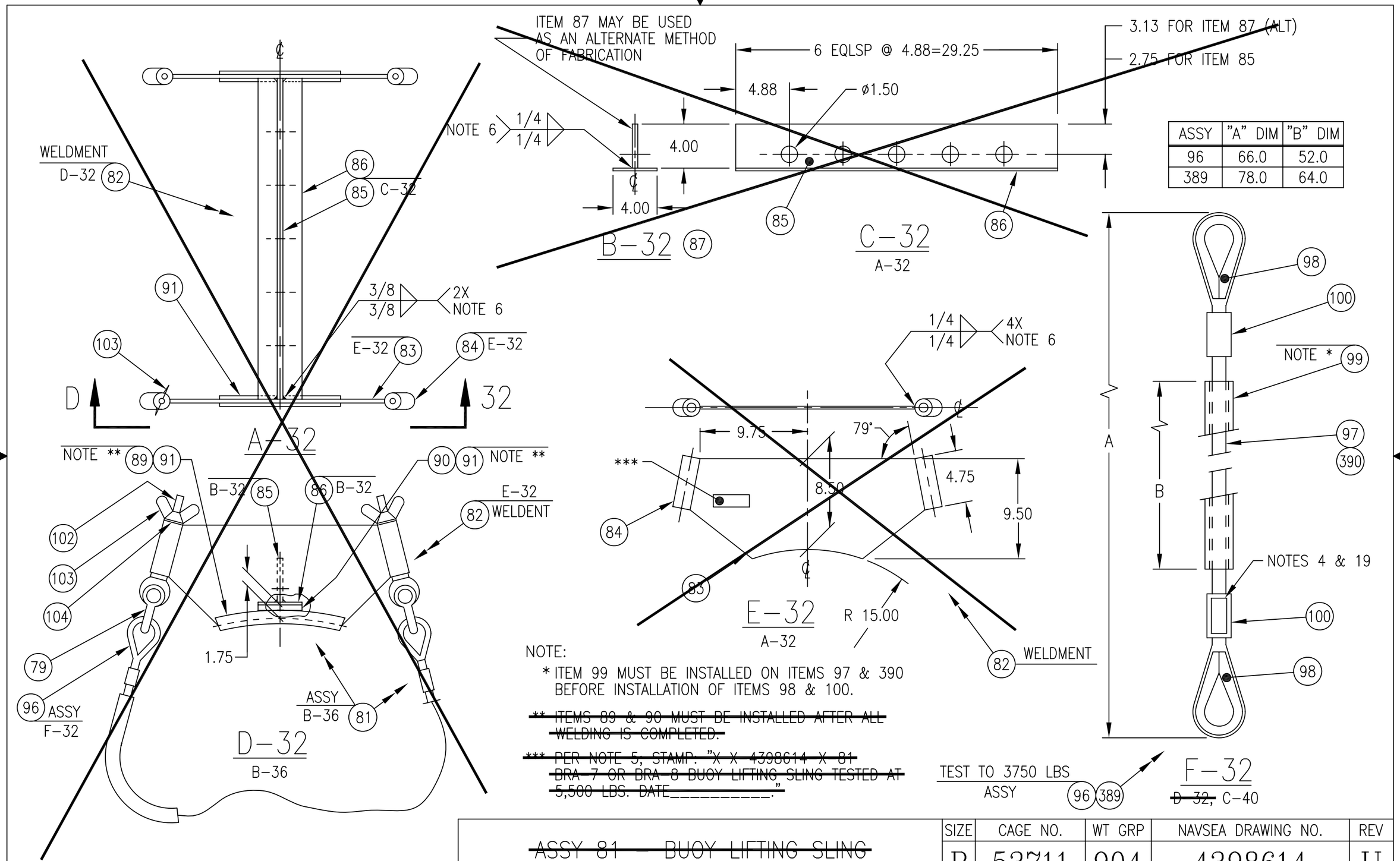

ASSY	"A" DIM	"B" DIM
96	66.0	52.0
389	78.0	64.0

NOTE:

* ITEM 99 MUST BE INSTALLED ON ITEMS 97 & 390 BEFORE INSTALLATION OF ITEMS 98 & 100.

~~** ITEMS 89 & 90 MUST BE INSTALLED AFTER ALL WELDING IS COMPLETED.~~

~~*** PER NOTE 5, STAMP: "X X 4398614 X 81 BRA 7 OR BRA 8 BUOY LIFTING SLING TESTED AT 5,500 LBS. DATE_____."~~

~~ASSY 81 — BUOY LIFTING SLING~~

ASSY 96 & 389 – WIRE ROPE

SIZE	CAGE NO.	WT GRP	NAVSEA DRAWING NO.	REV
B	53711	904	4398614	U
SCALE – NONE			SHEET 32	

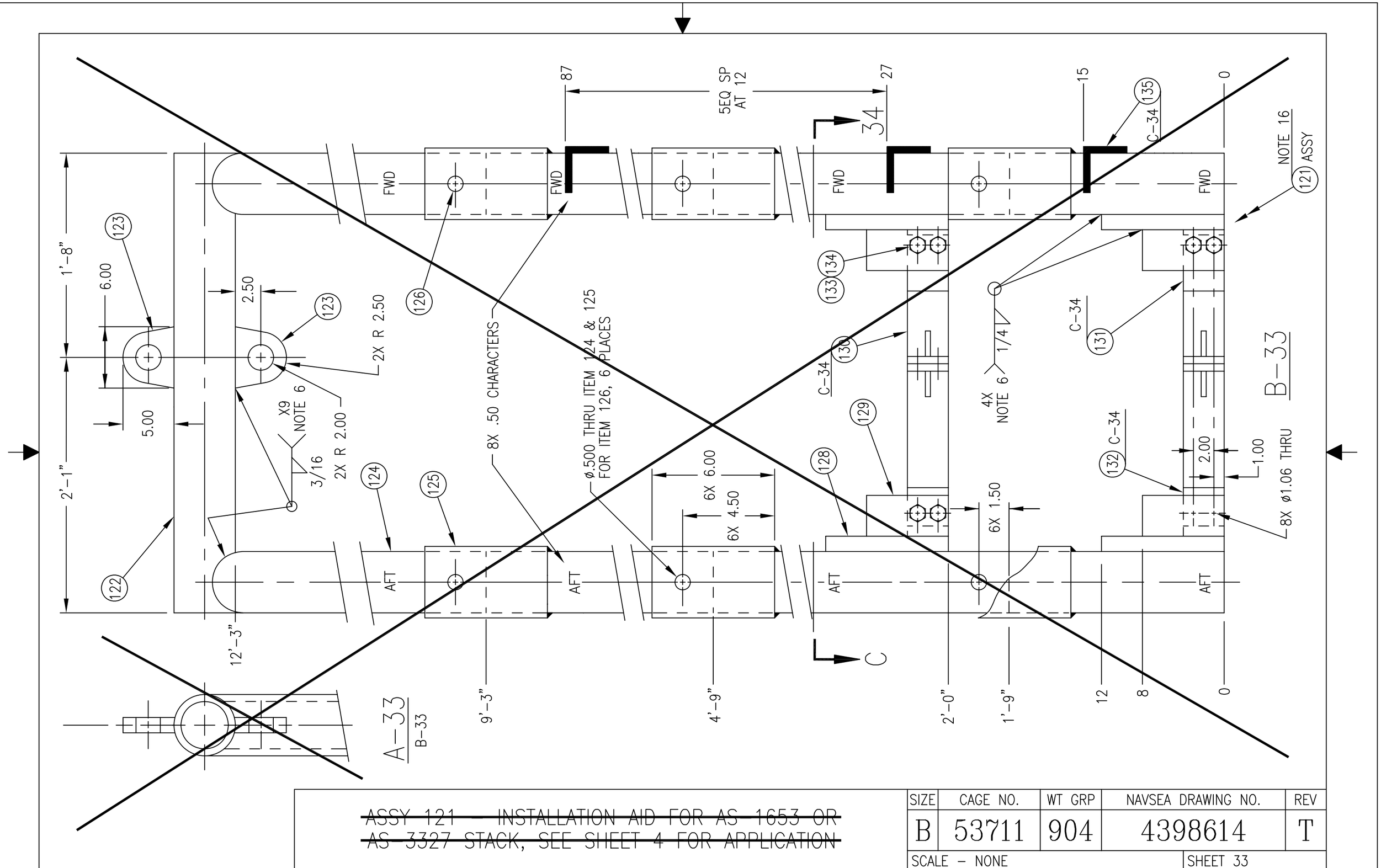

~~ASSY 121 — INSTALLATION AID FOR AS-1653 OR AS-3327 STACK, SEE SHEET 4 FOR APPLICATION~~

SIZE	CAGE NO.	WT GRP	NAVSEA DRAWING NO.	REV
B	53711	904	4398614	T
SCALE – NONE			SHEET 33	

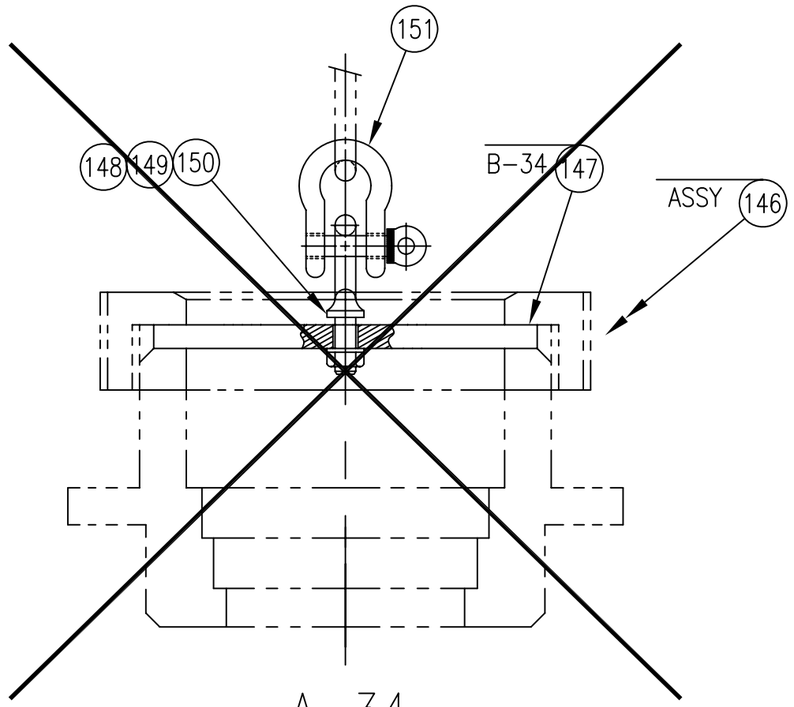

A-34

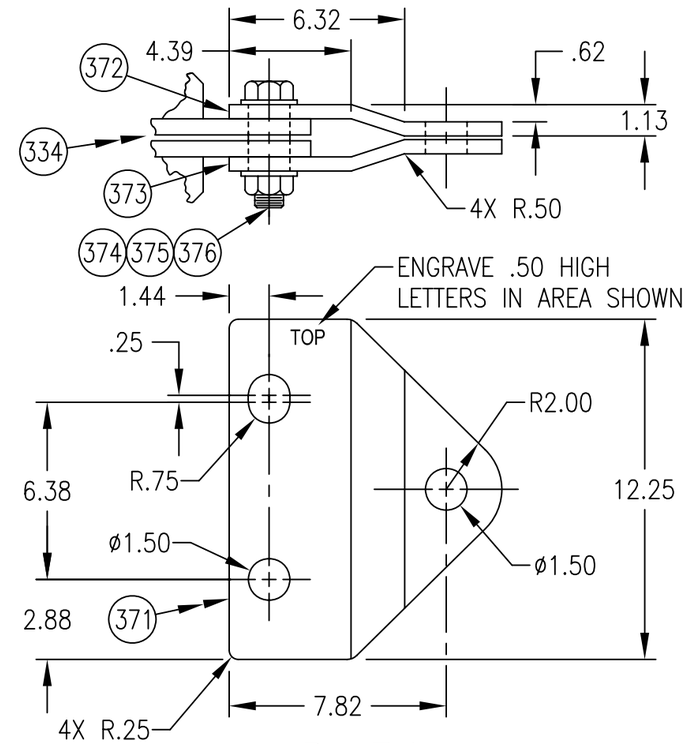

D-34

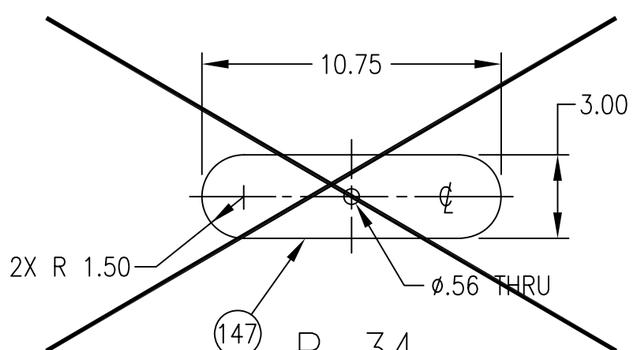

B-34

A-34

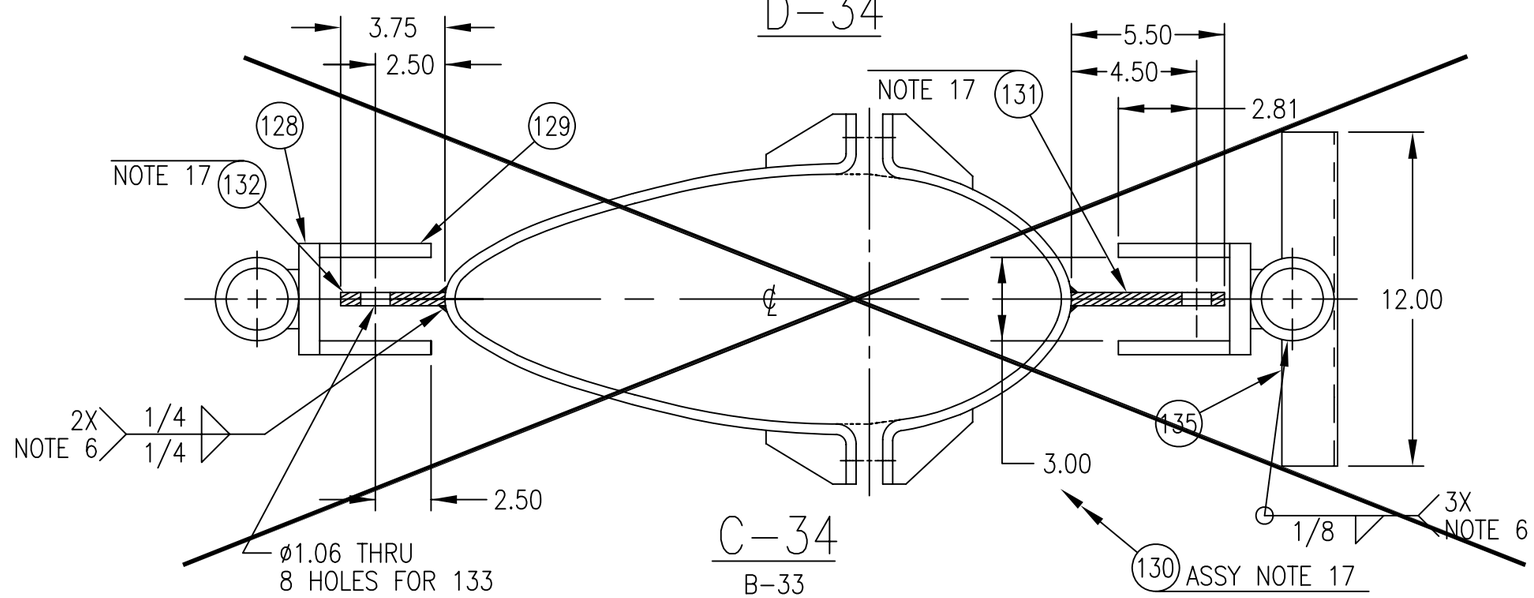

C-34

B-33

~~INSTALLATION AID ASSY & DETAIL~~ SNORKEL LIFTING SUPPORT BRACKET	SIZE	CAGE NO.	WT GRP	NAVSEA DRAWING NO.	REV
	B	53711	904	4398614	V
	SCALE – NONE			SHEET 34	

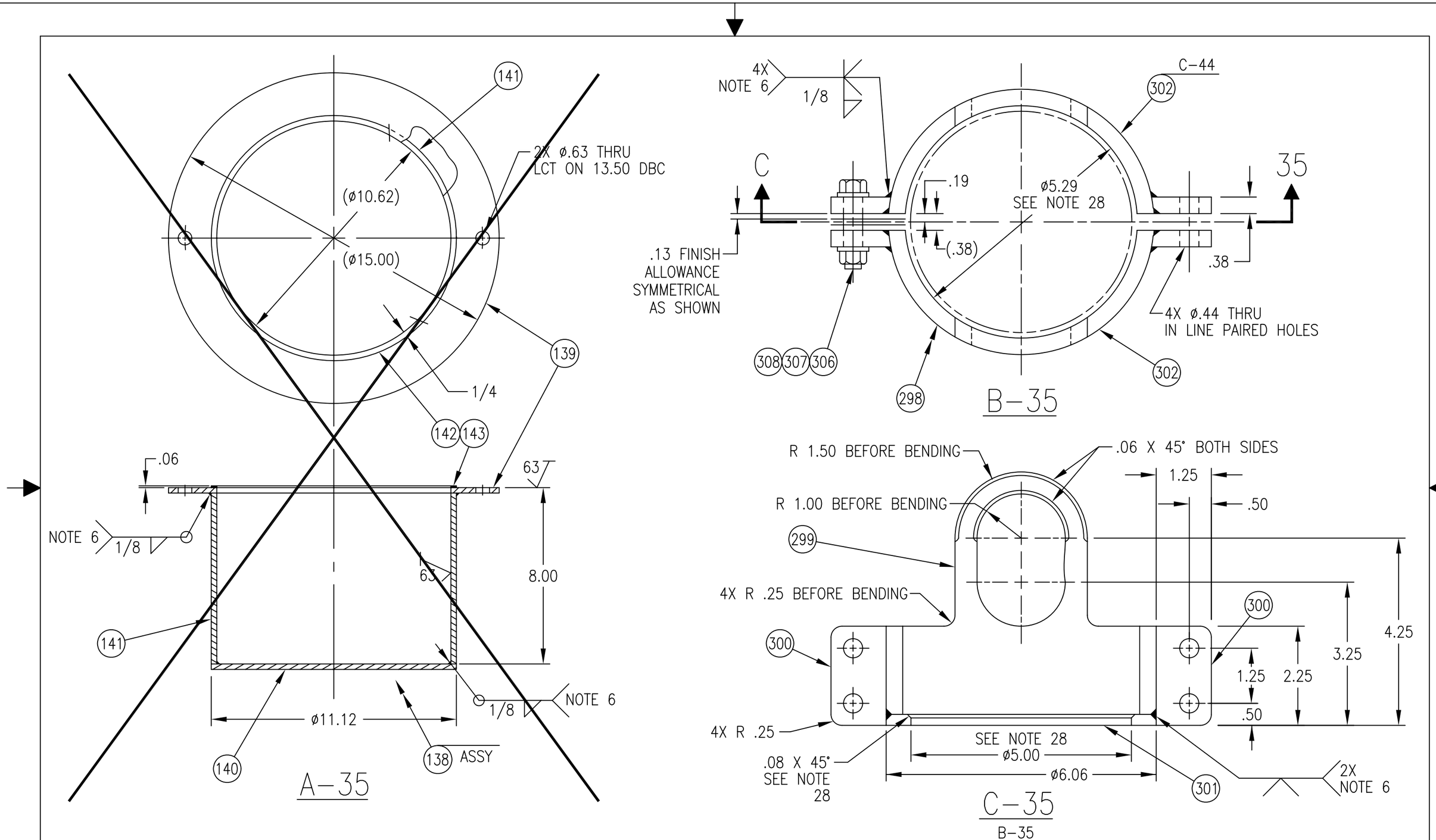

~~ASSY 138 - PROTECTIVE COVER~~

ASSY 298 - HOIST CYLINDER CLAMP

SIZE	CAGE NO.	WT GRP	NAVSEA DRAWING NO.	REV
B	53711	904	4398614	V
SCALE - NONE			SHEET 35	

SYSTEM	WEIGHT (LBS)
BRR-6 OR 6B	2200
~~BRA 7/8~~	~~2200~~
~~OE 305~~	~~1800~~

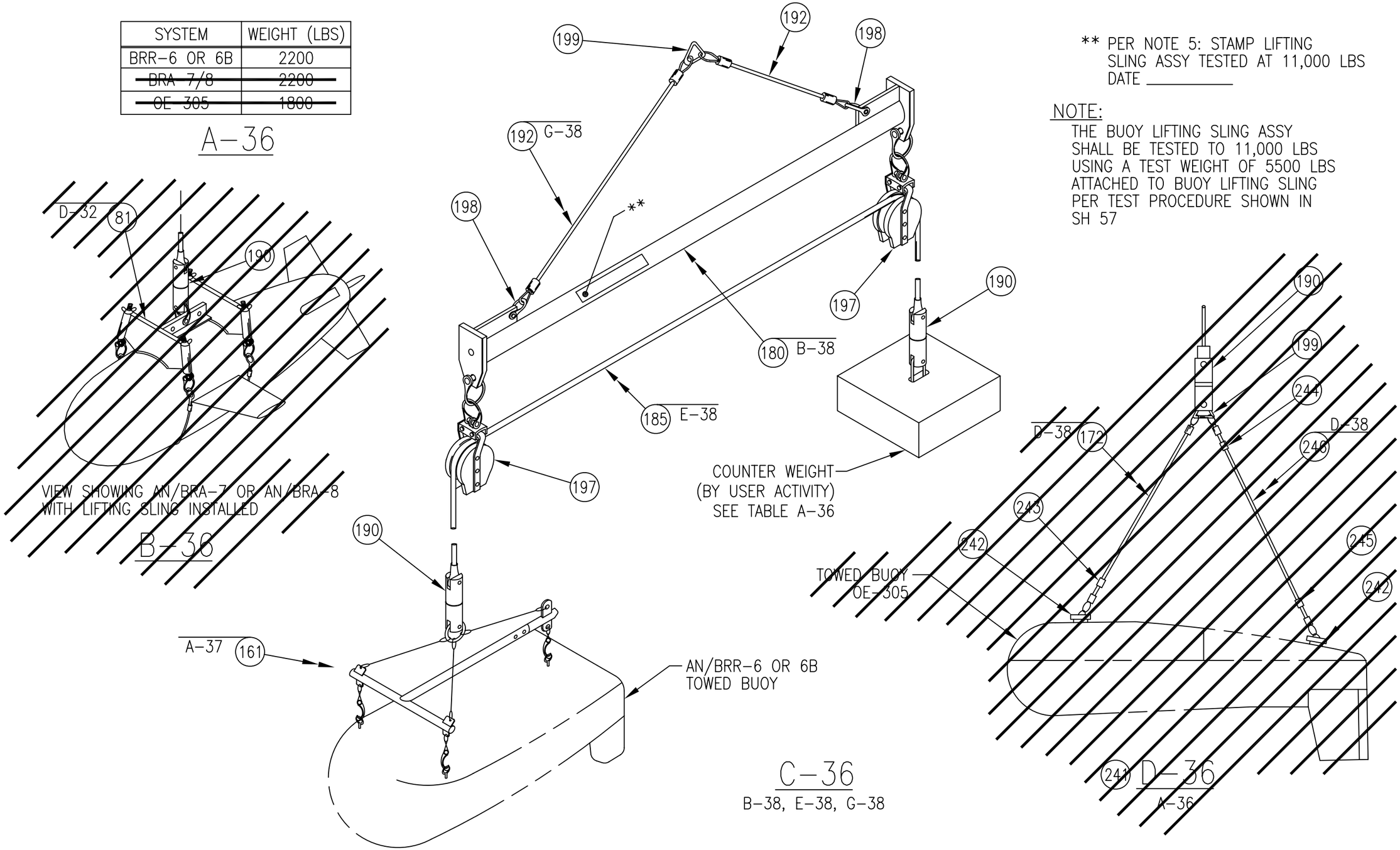

** PER NOTE 5: STAMP LIFTING SLING ASSY TESTED AT 11,000 LBS
DATE _____

NOTE:
THE BUOY LIFTING SLING ASSY SHALL BE TESTED TO 11,000 LBS USING A TEST WEIGHT OF 5500 LBS ATTACHED TO BUOY LIFTING SLING PER TEST PROCEDURE SHOWN IN SH 57

BUOY LIFTING SLING ASSY	SIZE	CAGE NO.	WT GRP	NAVSEA DRAWING NO.	REV
	B	53711	904	4398614	T
	SCALE – NONE			SHEET 36	

SYSTEM	"X" DIM
BRR-6 OR 6B	49.00
~~p2~~	~~62.00~~

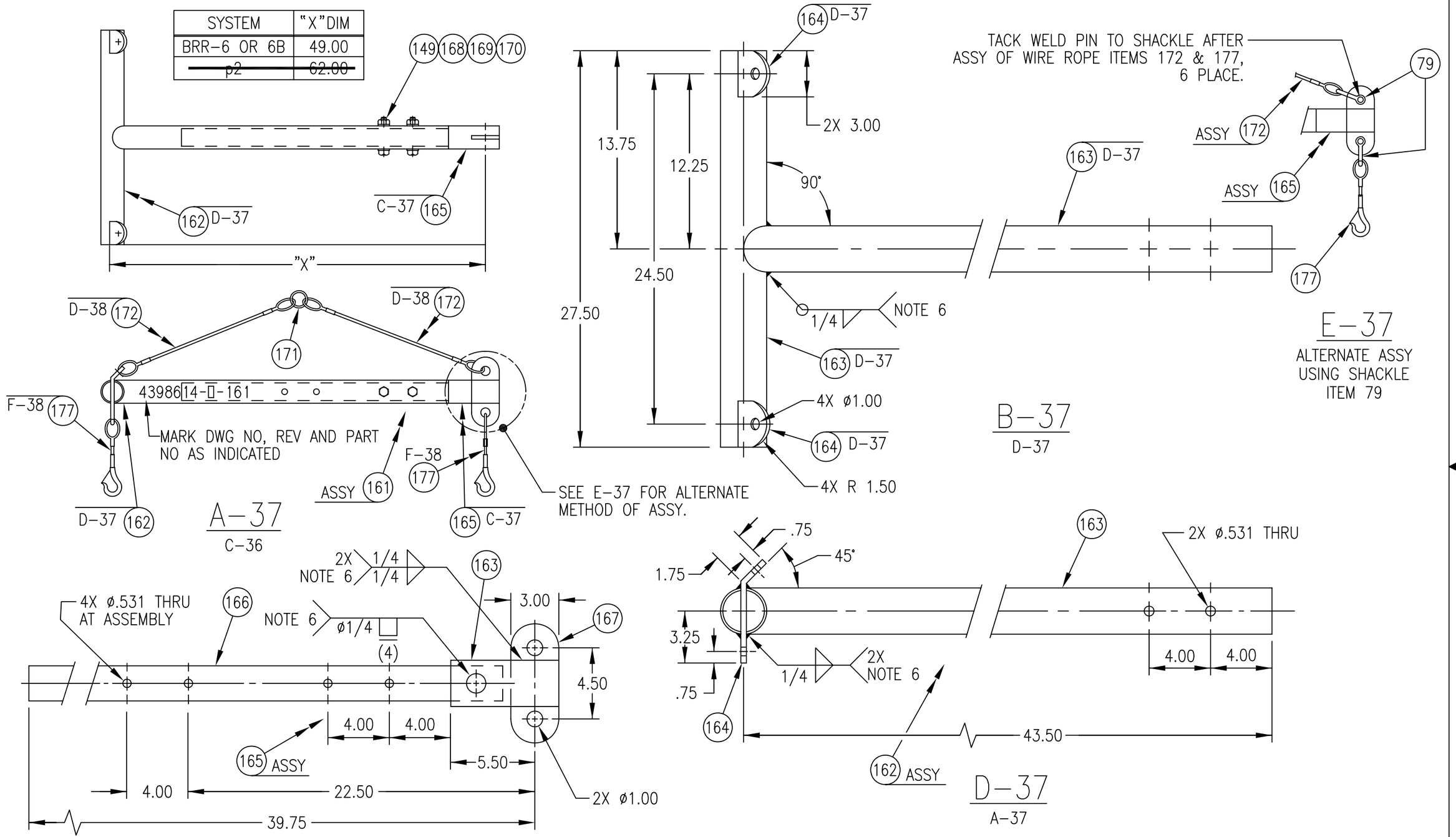

BUOY "T" BAR ASSY	SIZE	CAGE NO.	WT GRP	NAVSEA DRAWING NO.	REV
	B	53711	904	4398614	T
	SCALE – NONE			SHEET 37	

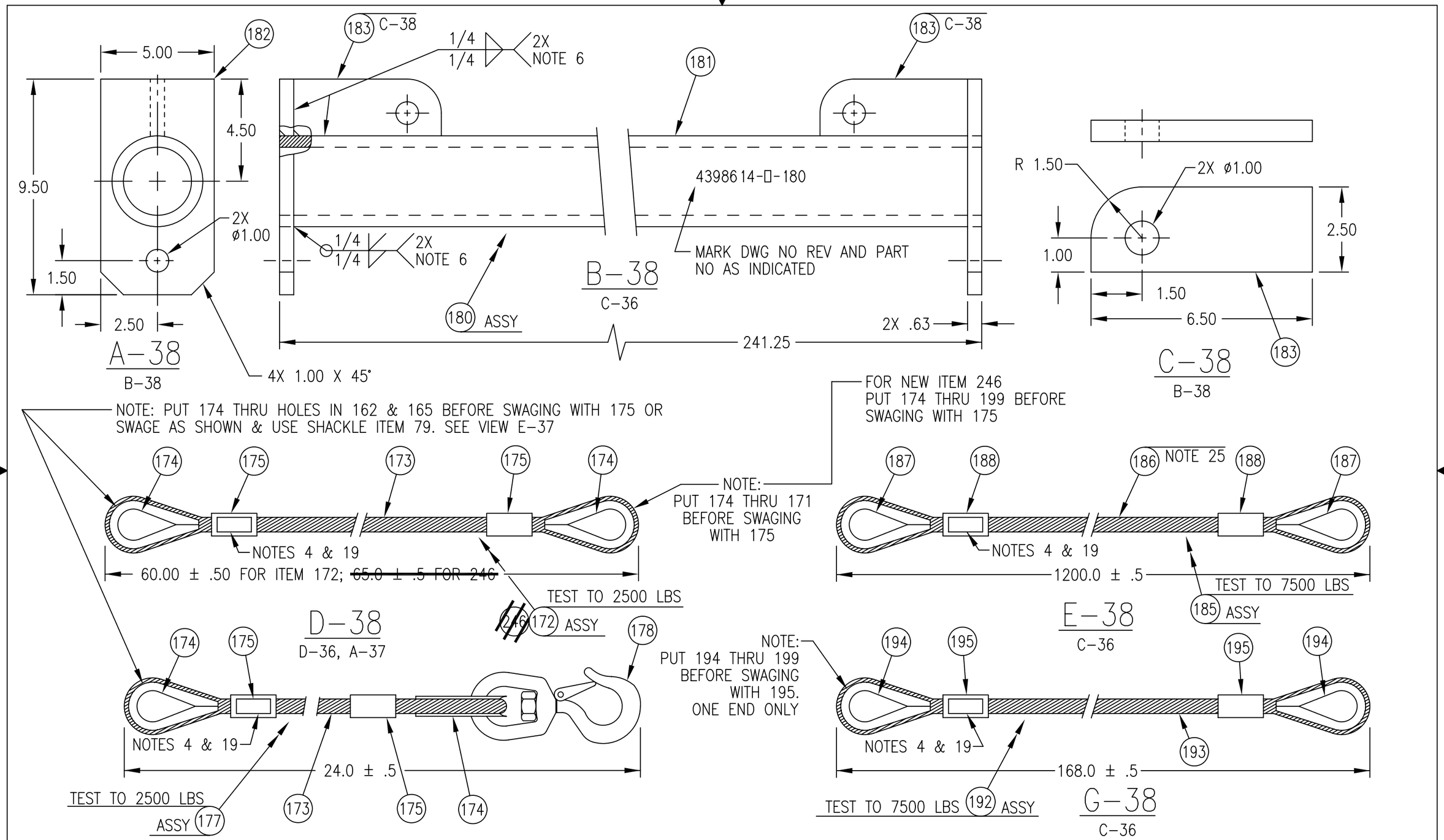

SPREADER BAR & WIRE ROPE
CABLE ASSY

SIZE	CAGE NO.	WT GRP	NAVSEA DRAWING NO.	REV
B	53711	904	4398614	T
SCALE – NONE			SHEET 38	

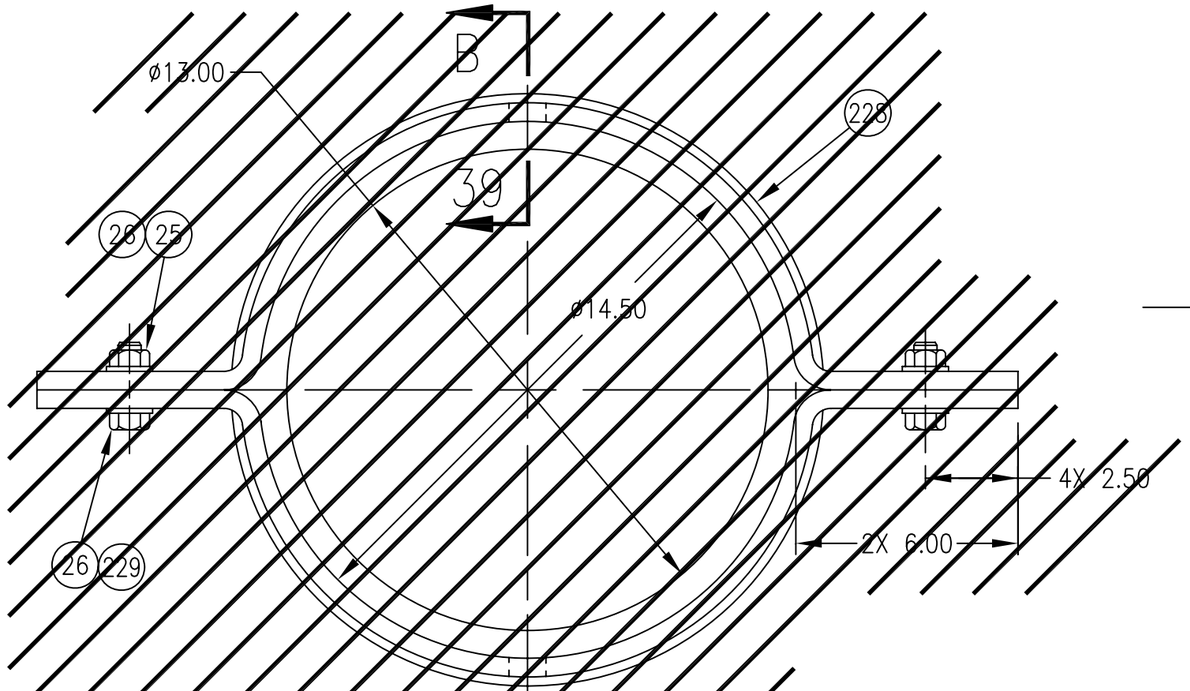

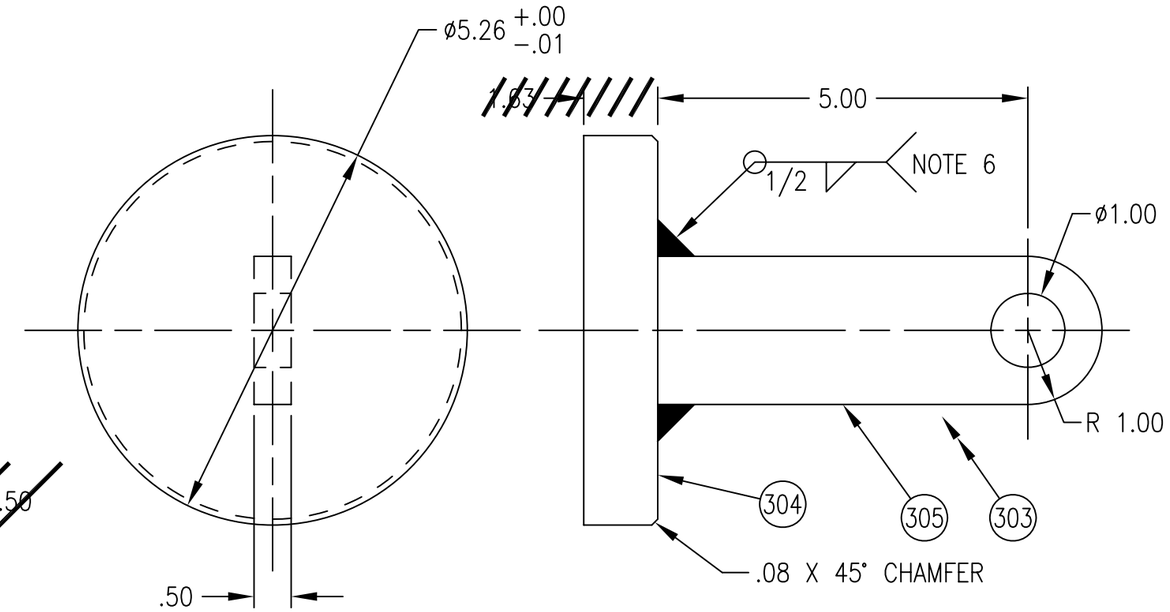

C–39

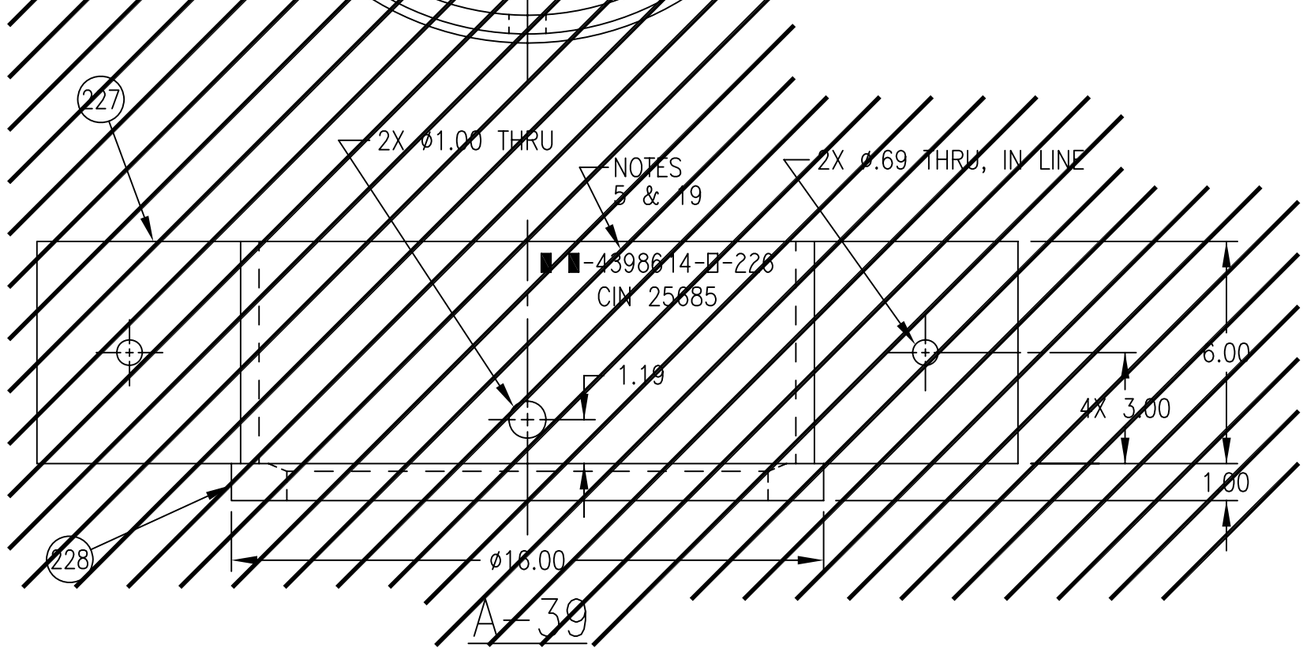

A–39

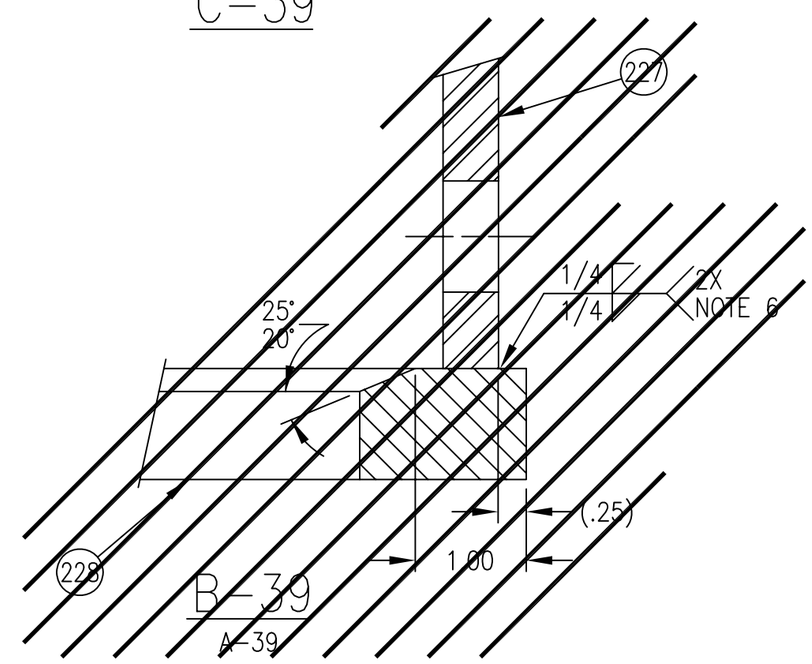

B–39

A–39

ASSY 303 – TEST FIXTURE ~~ASSY 226 – SUPPORT CLAMP~~ ~~FOR TYPE 8B PERISCOPE E & E ADAPTER~~	SIZE	CAGE NO.	WT GRP	NAVSEA DRAWING NO.	REV
	B	53711	904	4398614	U
	SCALE – NONE			SHEET 39	

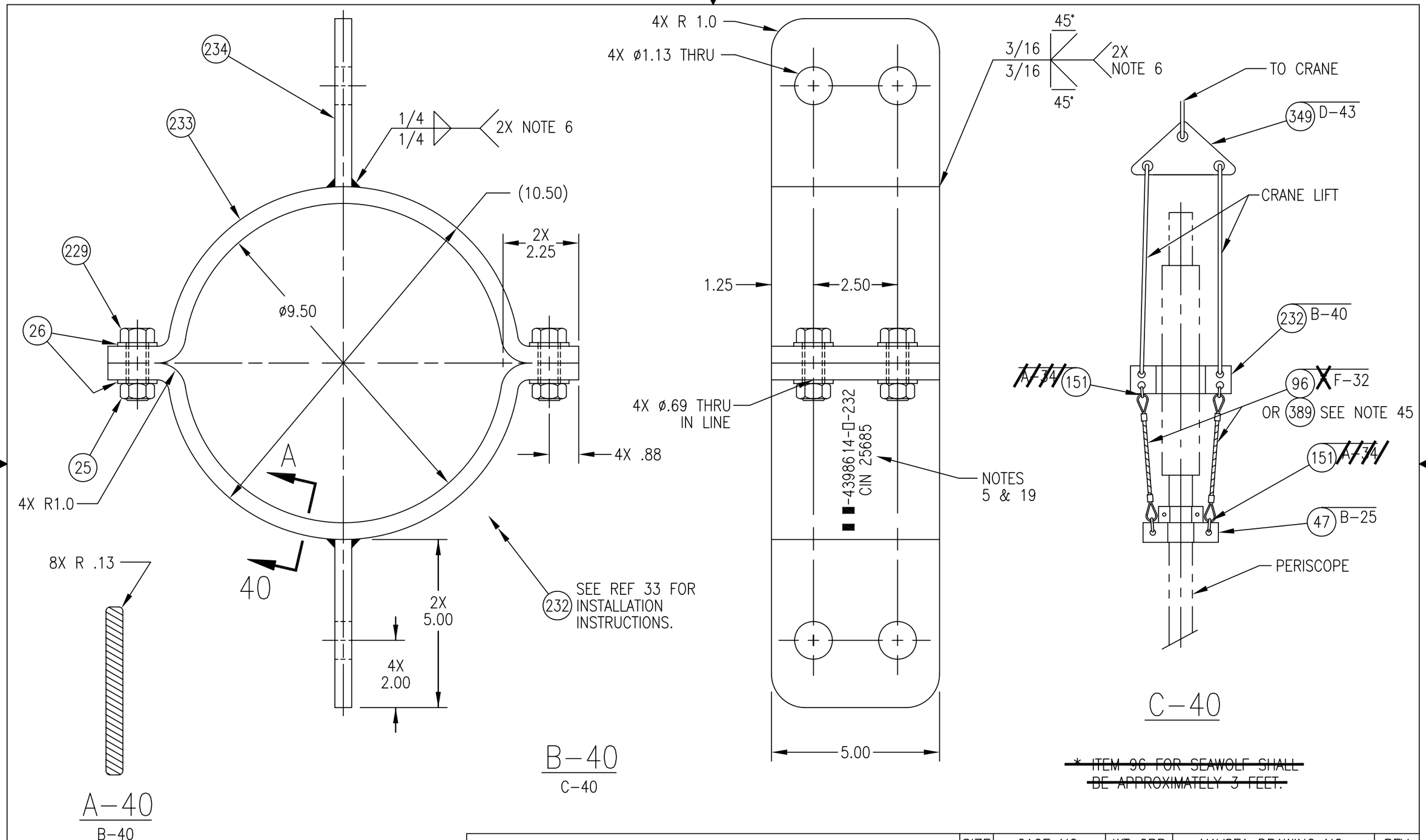

~~* ITEM 96 FOR SEAWOLF SHALL BE APPROXIMATELY 3 FEET.~~

ASSY 232 – SLIDING CLAMP	SIZE	CAGE NO.	WT GRP	NAVSEA DRAWING NO.	REV
	B	53711	904	4398614	U
	SCALE – NONE			SHEET 40	

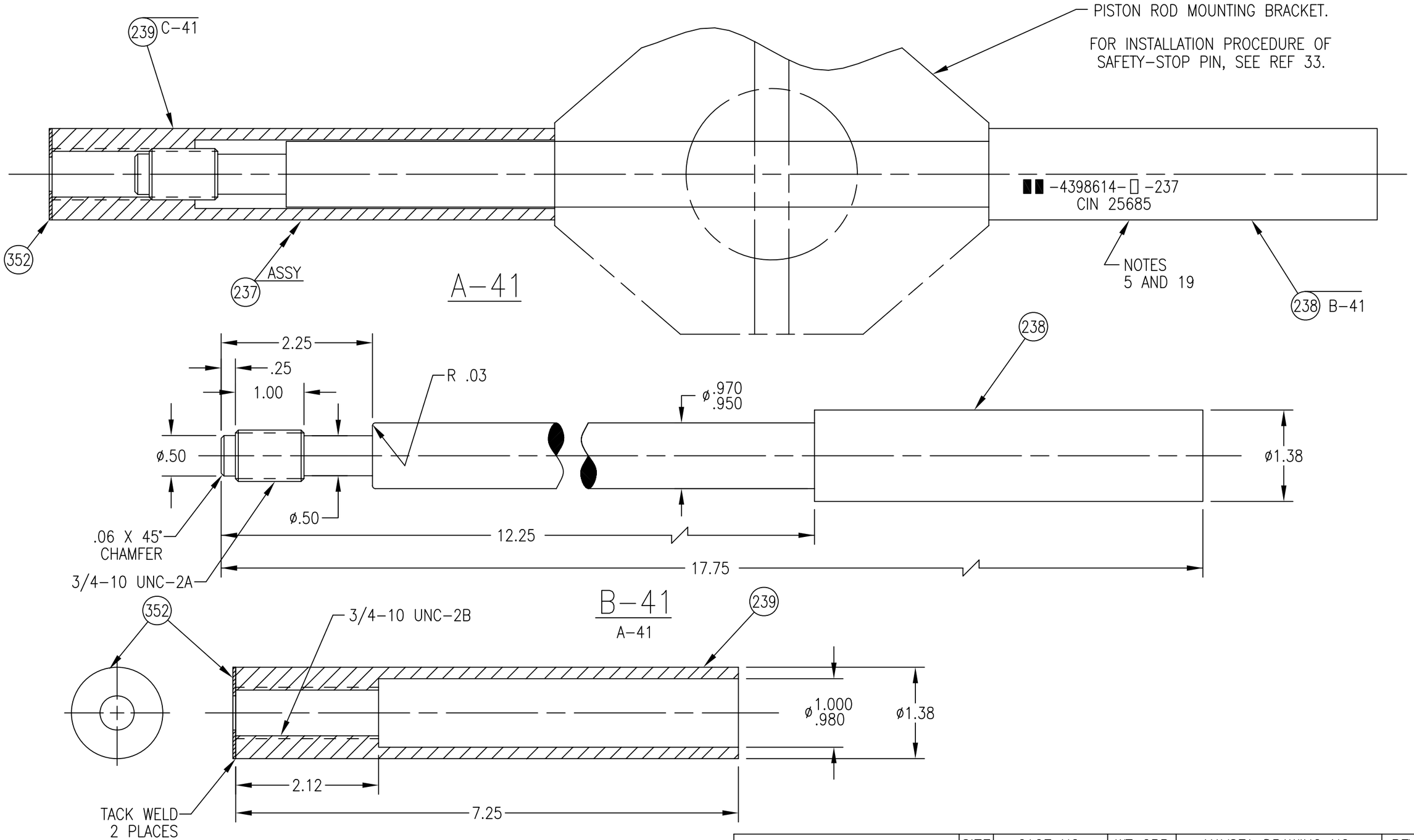

SAFETY-STOP PIN ASSEMBLY	SIZE	CAGE NO.	WT GRP	NAVSEA DRAWING NO.	REV
	B	53711	904	4398614	S
	SCALE - NONE			SHEET 41	

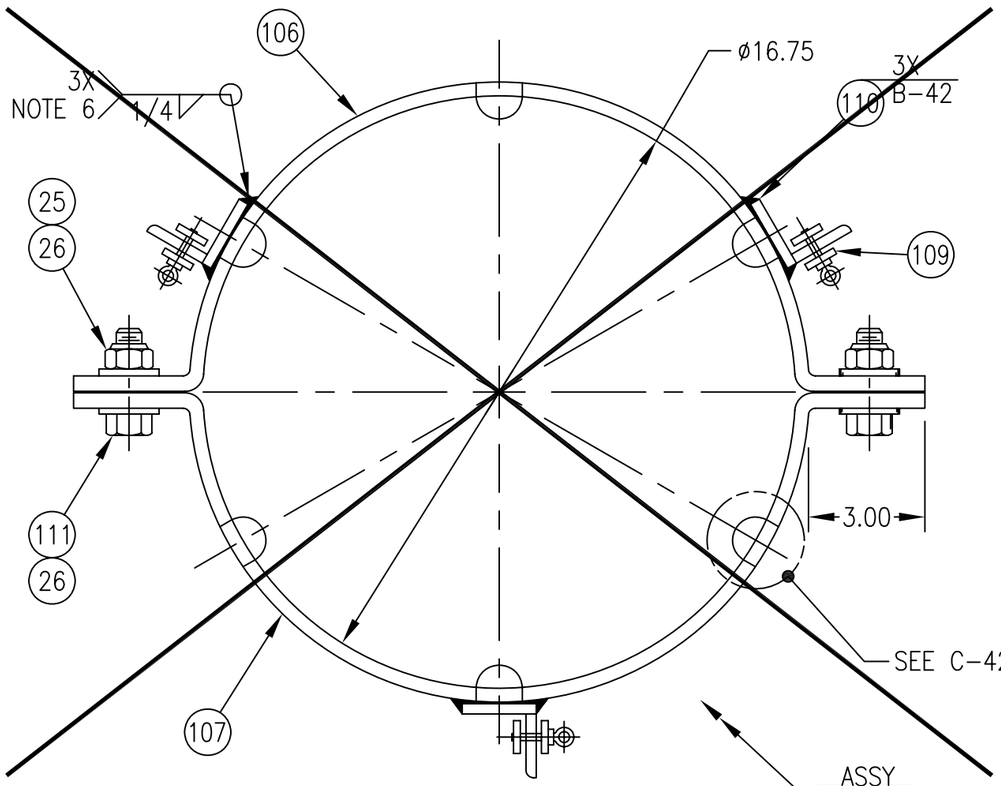

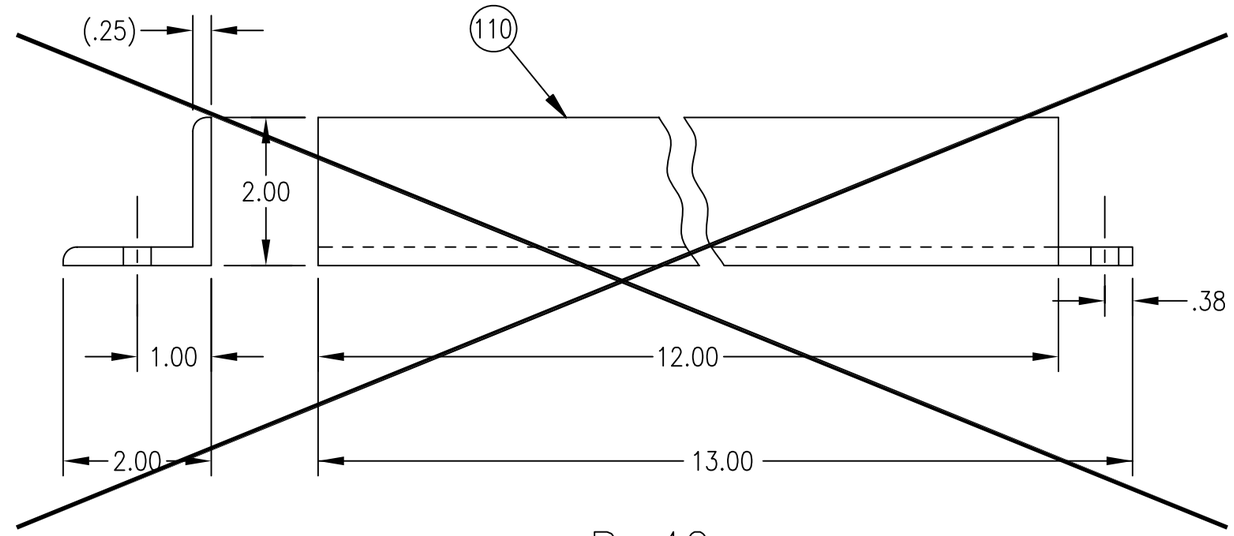

B-42
A-42

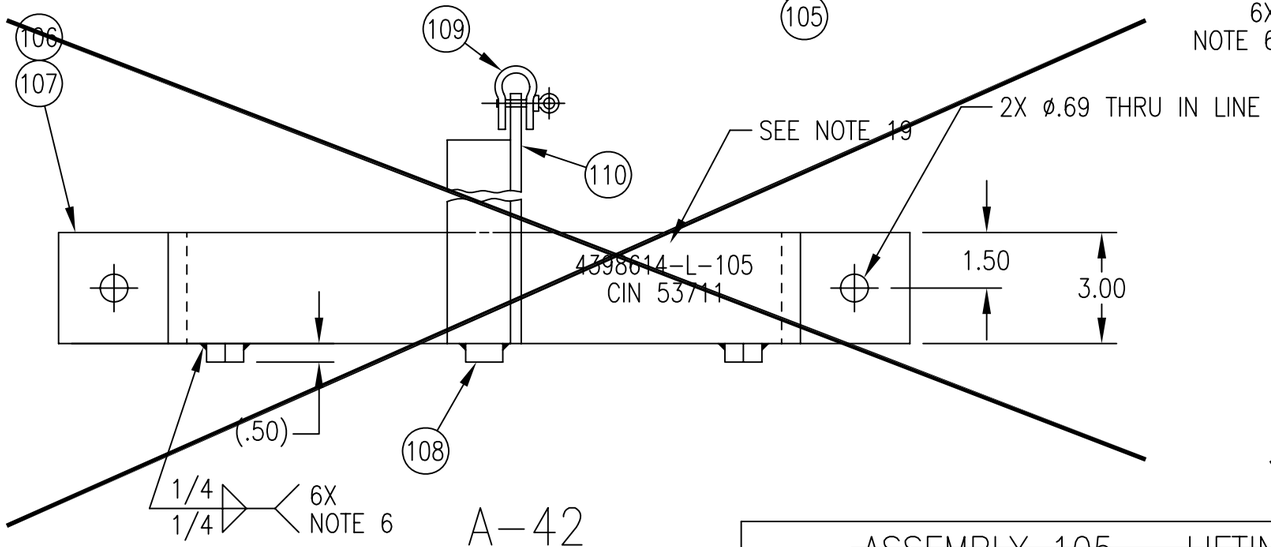

A-42

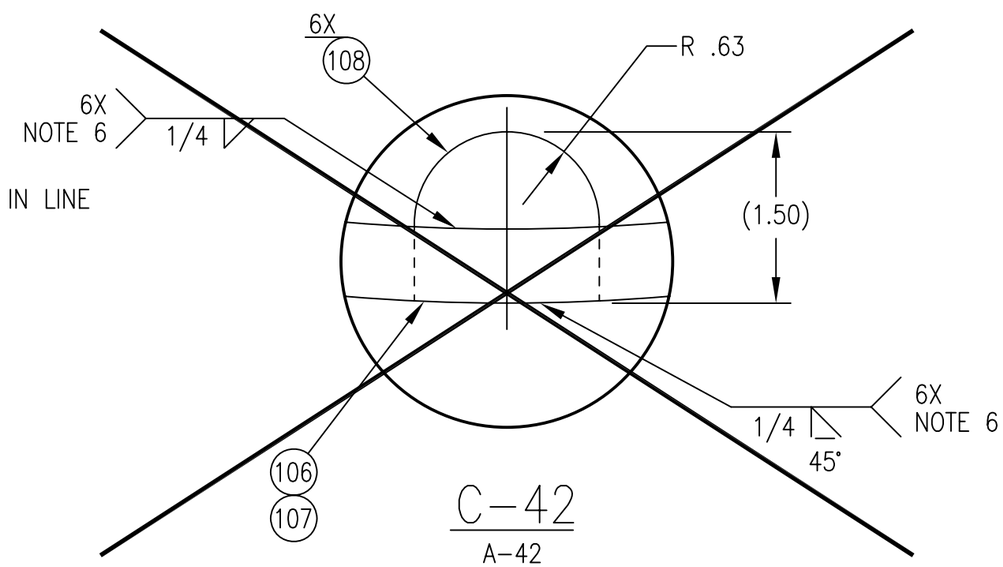

C-42
A-42

~~ASSEMBLY 105 – LIFTING SLING~~
~~SEE SHEET 4 FOR APPLICATION~~
~~(USED ONLY FOR RADAR AB 1185 PEDESTAL)~~

SIZE	CAGE NO.	WT GRP	NAVSEA DRAWING NO.	REV
B	53711	904	4398614	V
SCALE – NONE			SHEET 42	

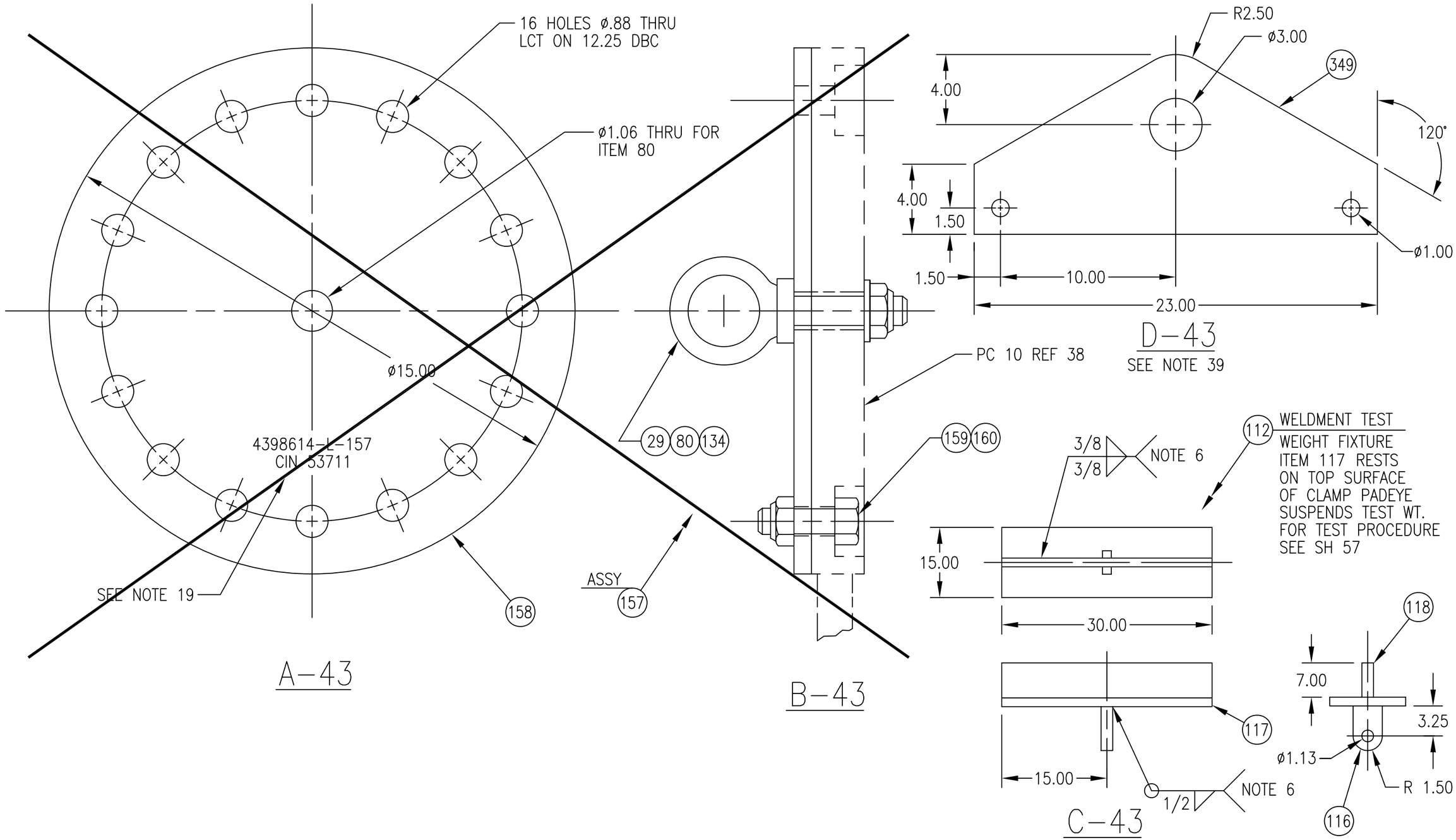

~~ASSY 157 — LIFTING PLATE~~ ~~SEE SHEET 4 FOR APPLICATION~~ LIFTING RIG AND WEIGHT TEST FIXTURE	SIZE	CAGE NO.	WT GRP	NAVSEA DRAWING NO.	REV
	B	53711	904	4398614	T
	SCALE – NONE			SHEET 43	

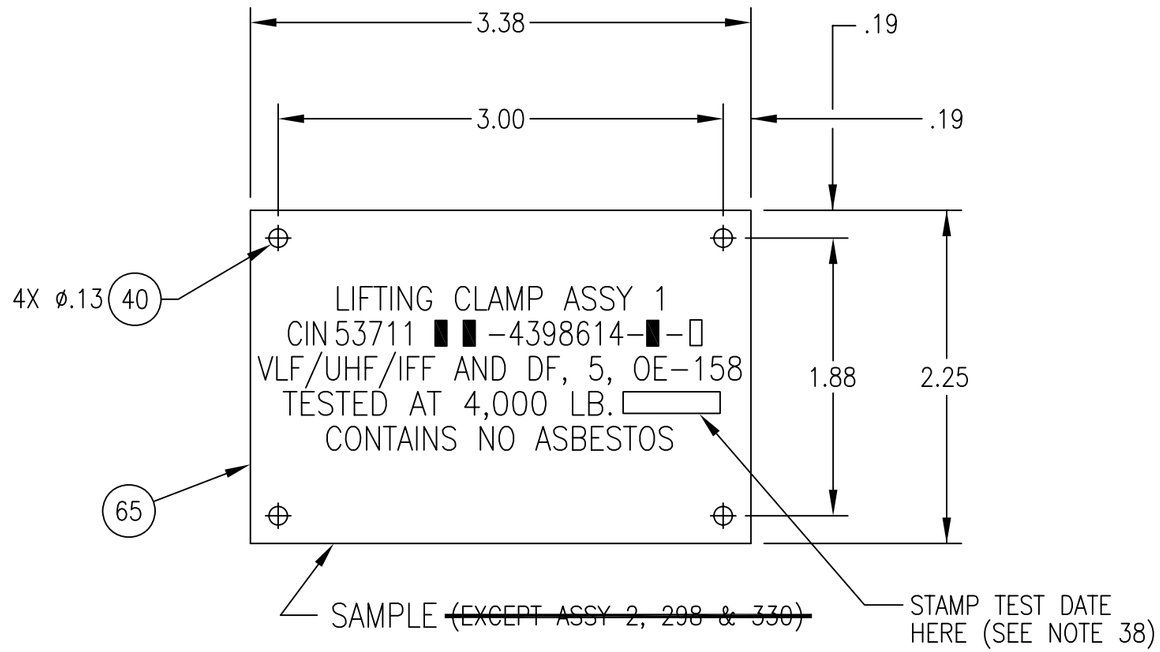

A-44

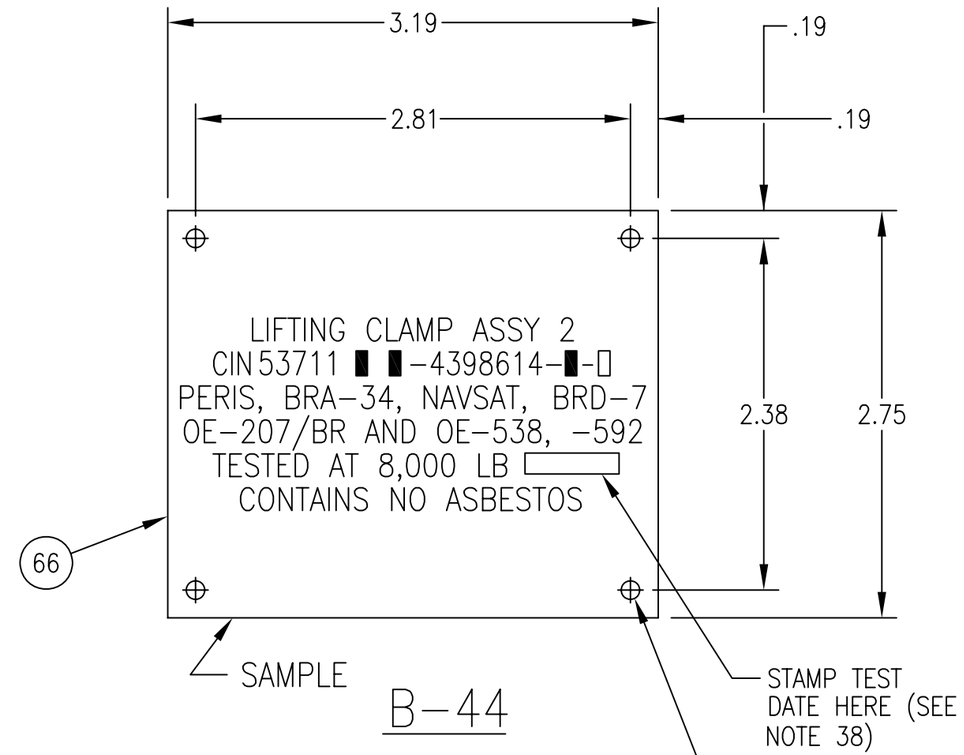

B-44

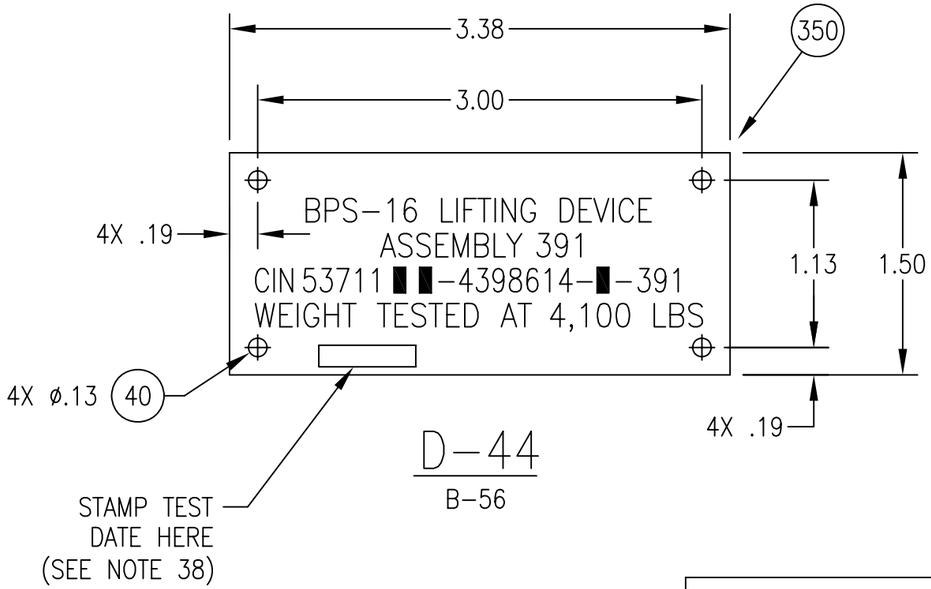

D-44

B-56

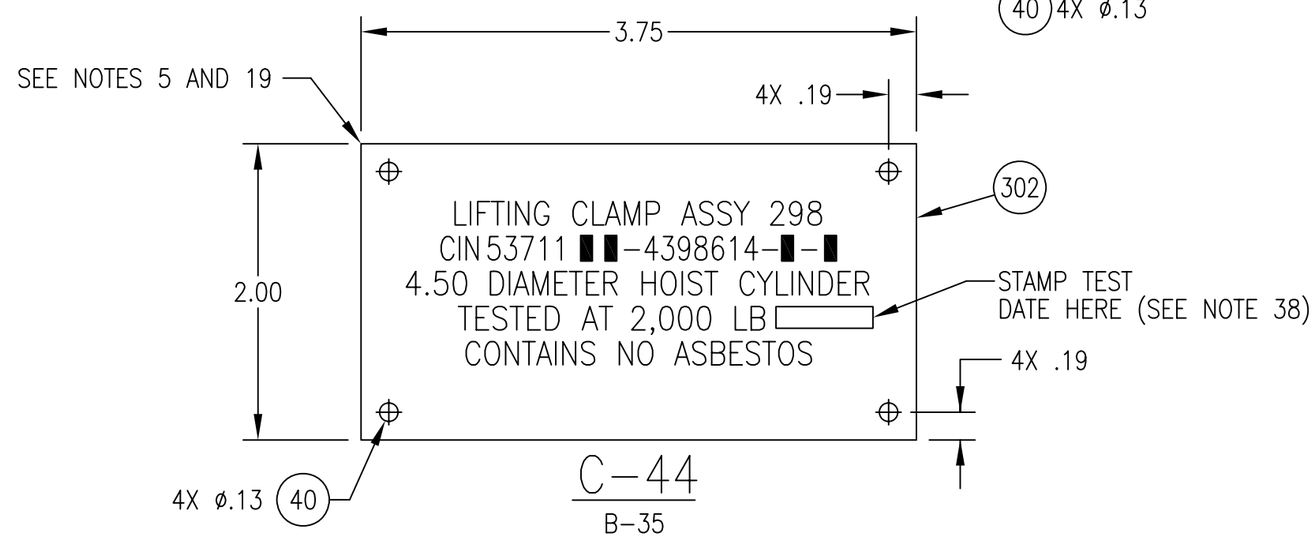

C-44

B-35

LABEL PLATES	SIZE	CAGE NO.	WT GRP	NAVSEA DRAWING NO.	REV
	B	53711	904	4398614	V
	SCALE - NONE			SHEET 44	

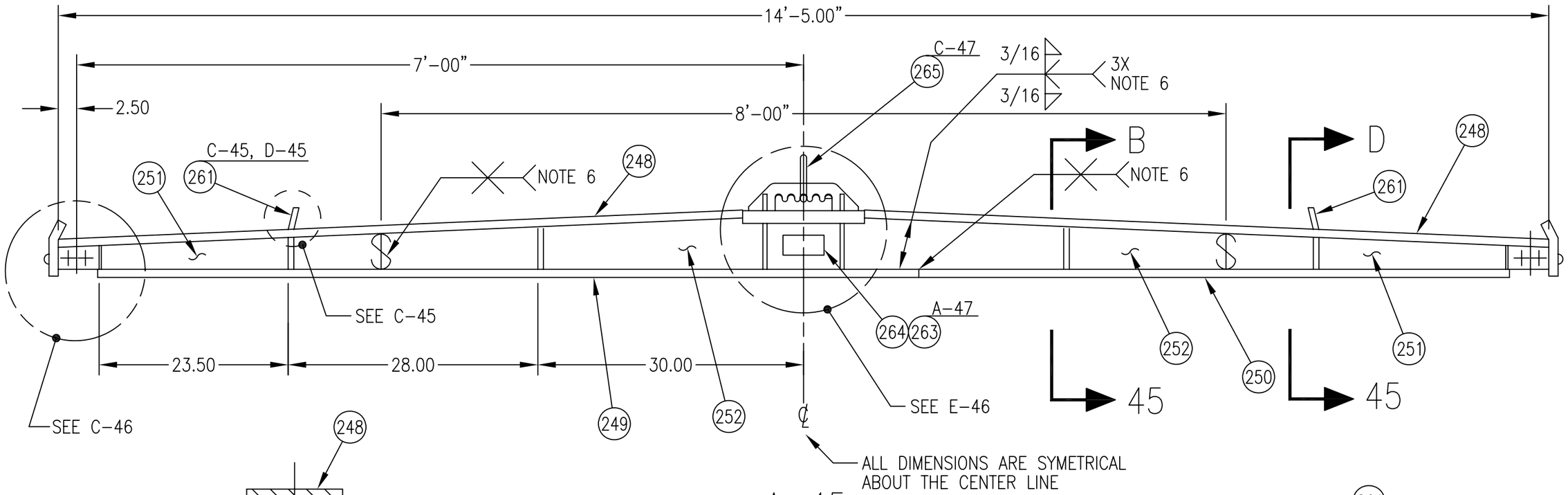

247 A-45
A-49

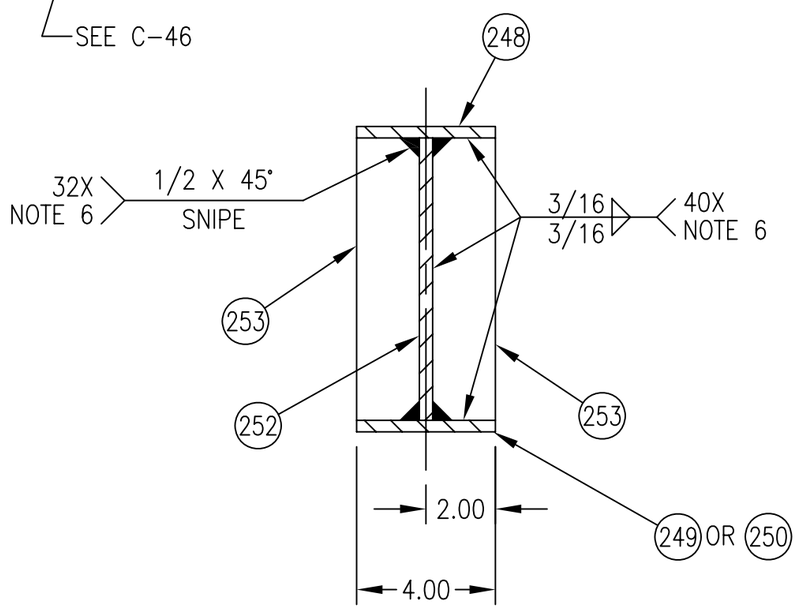

B-45
A-45

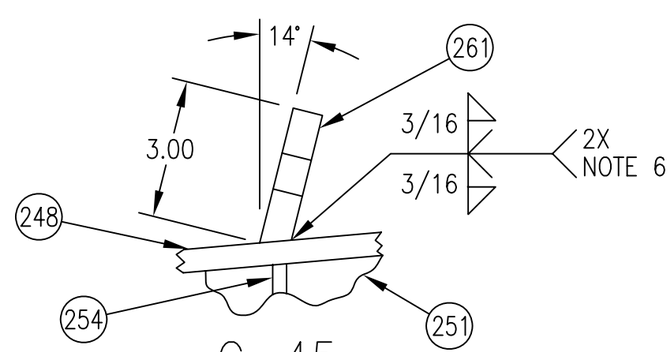

C-45
D-45

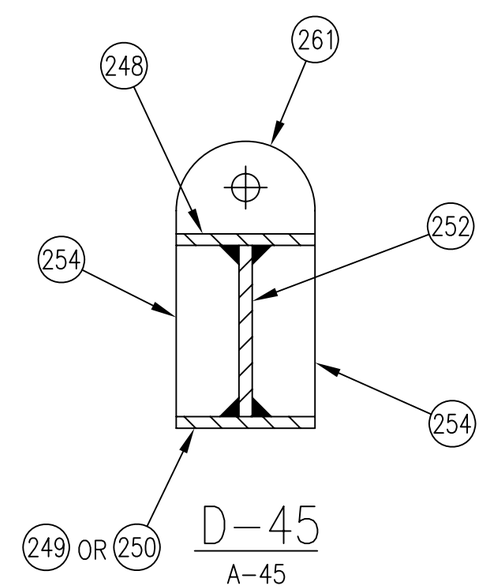

D-45
A-45

STRONGBACK ASSY	SIZE	CAGE NO.	WT GRP	NAVSEA DRAWING NO.	REV
	B	53711	904	4398614	P
	SCALE - NONE			SHEET 45	

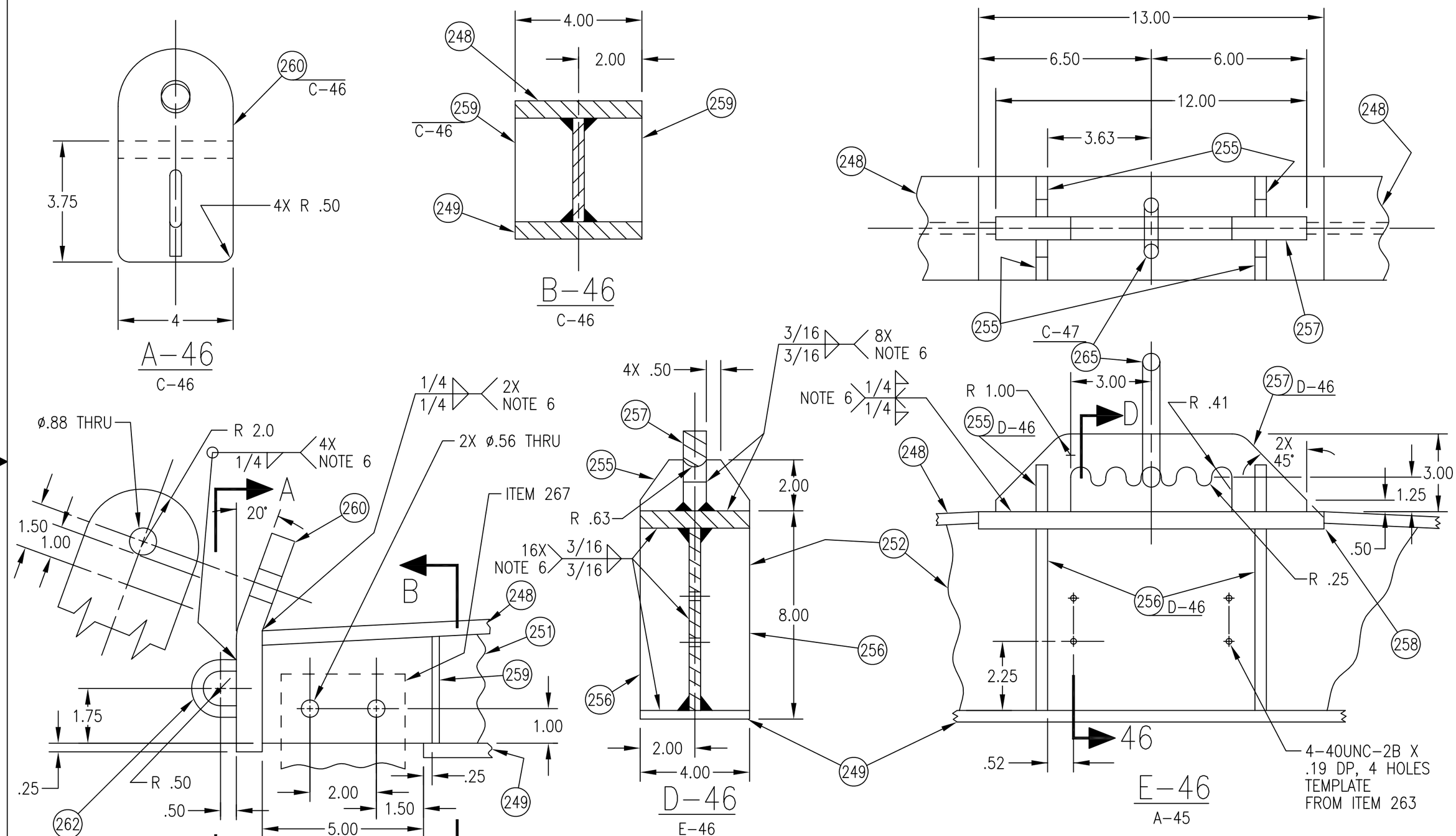

STRONGBACK DETAILS	SIZE	CAGE NO.	WT GRP	NAVSEA DRAWING NO.	REV
	B	53711	904	4398614	P
	SCALE – NONE			SHEET 46	

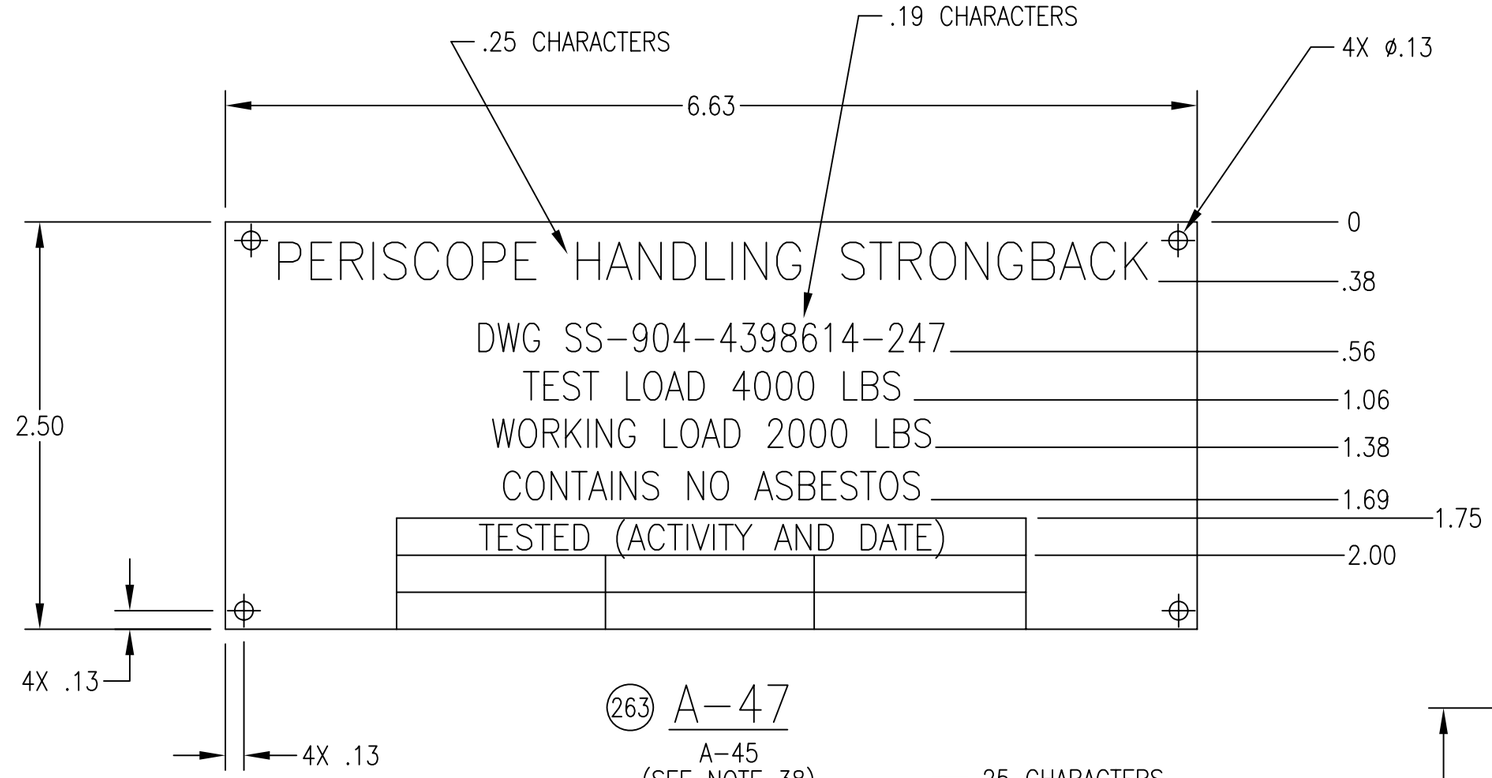

(263) A-47

A-45
(SEE NOTE 38)

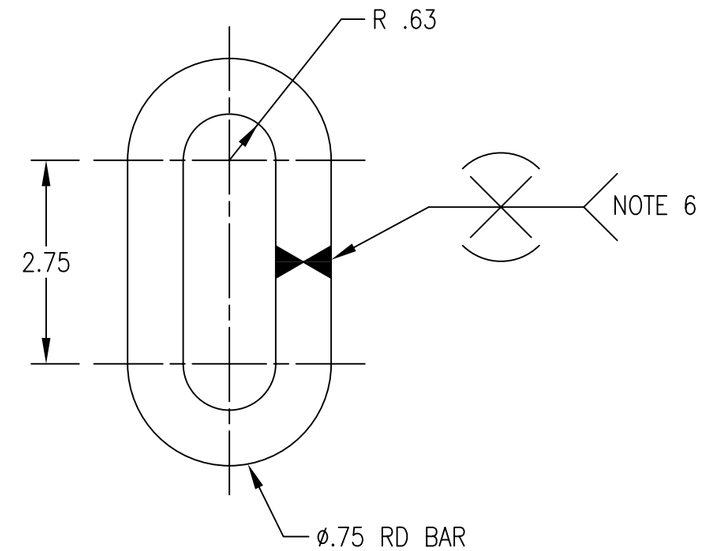

(265) C-47

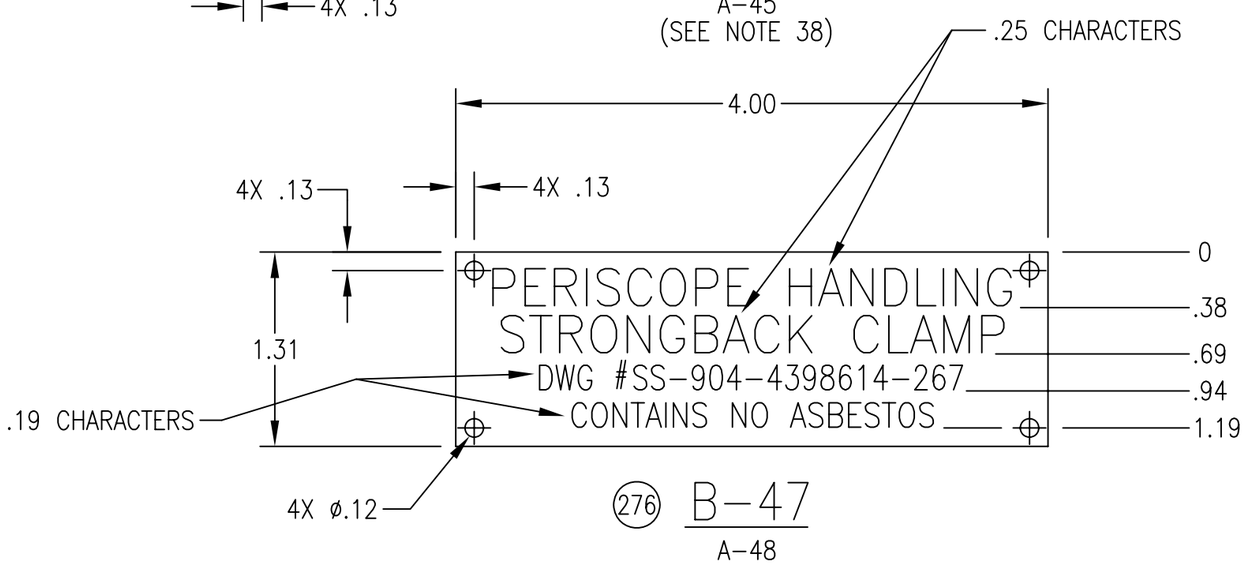

(276) B-47

A-48

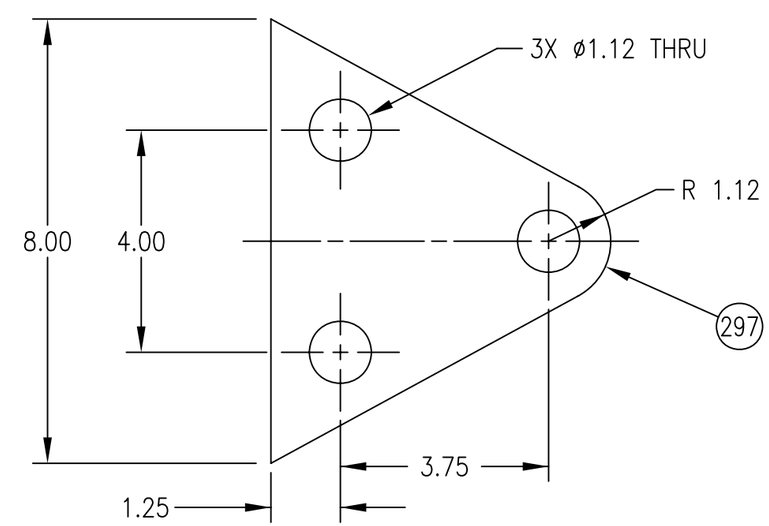

D-47

LABEL PLATES AND LINK AND LIFTING LUG	SIZE	CAGE NO.	WT GRP	NAVSEA DRAWING NO.	REV
	B	53711	904	4398614	T
	SCALE – NONE			SHEET 47	

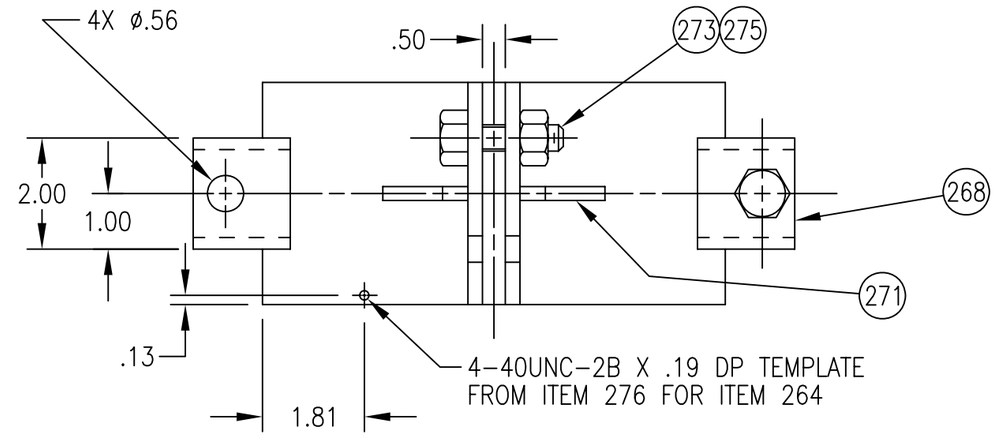

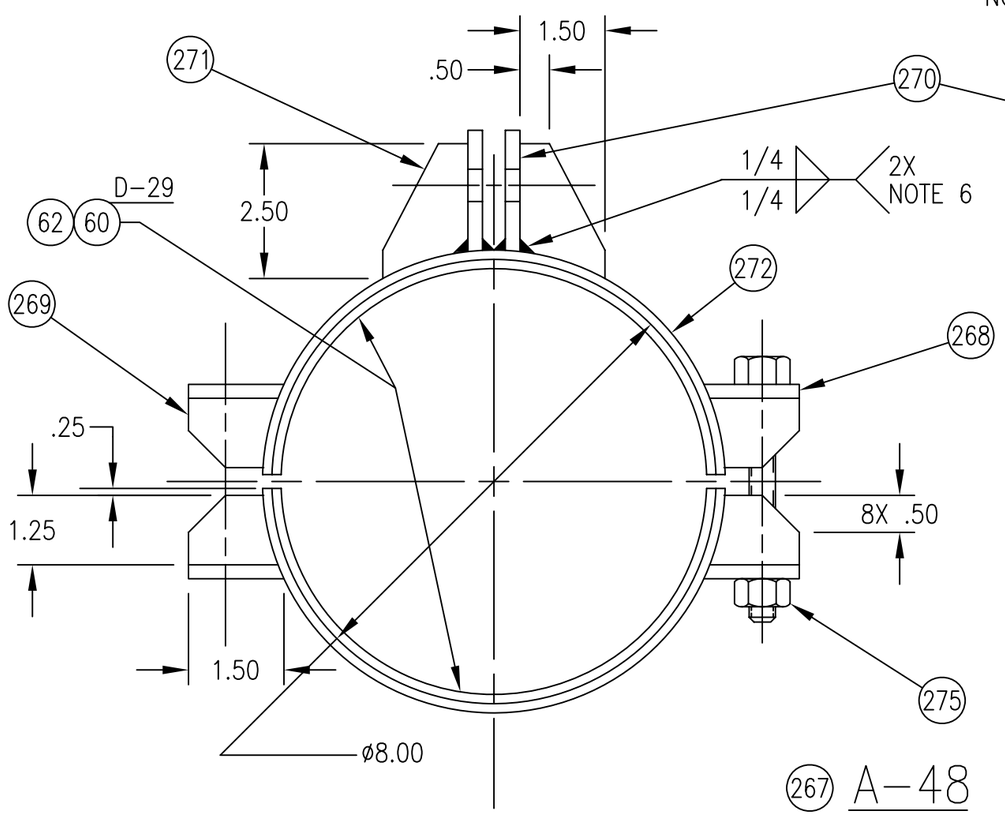

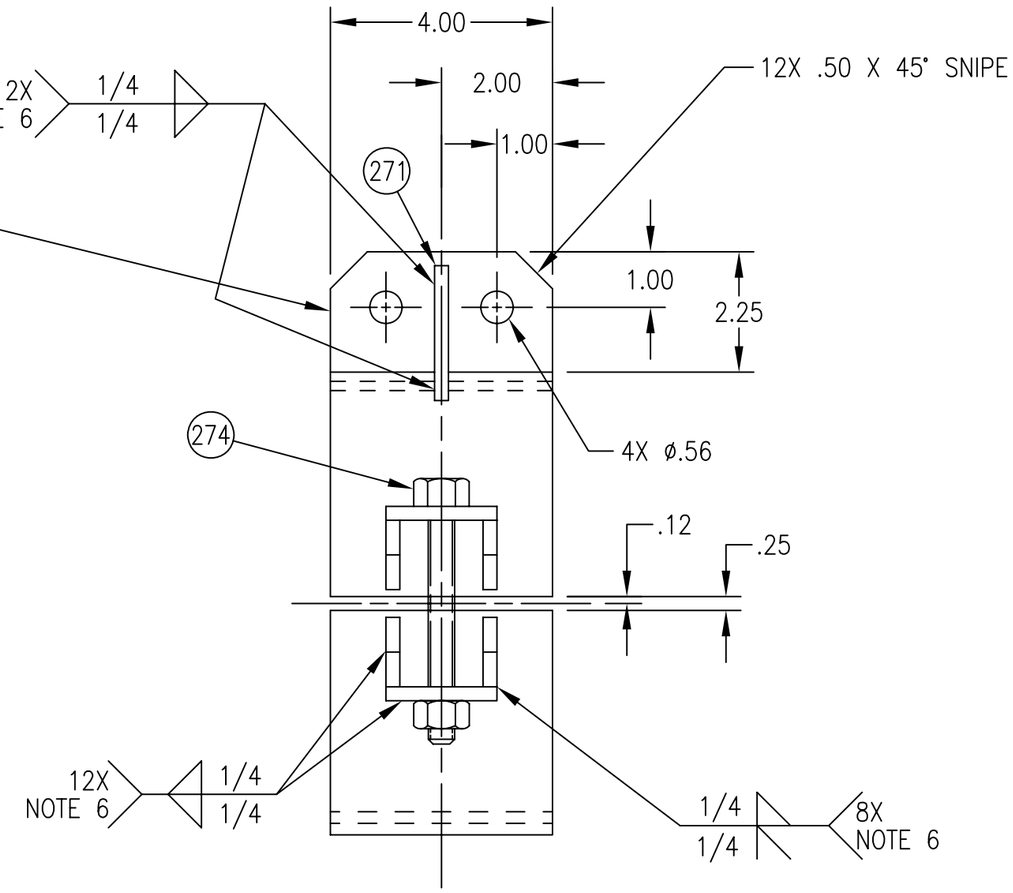

267 A-48
A-49

STRONGBACK CLAMP ASSY	SIZE	CAGE NO.	WT GRP	NAVSEA DRAWING NO.	REV
	B	53711	904	4398614	P
	SCALE - NONE			SHEET 48	

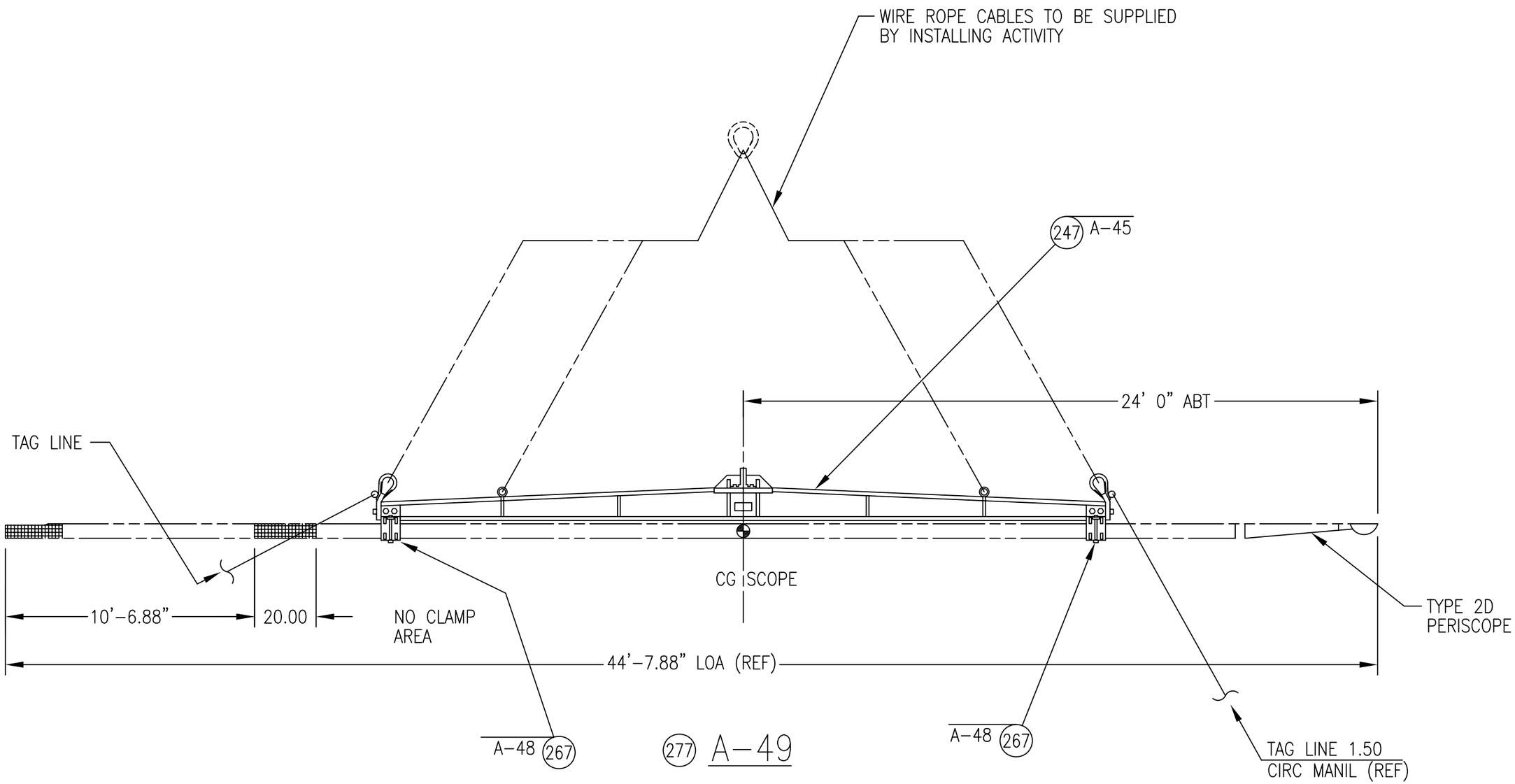

STRONGBACK LIFTING ASSY	SIZE	CAGE NO.	WT GRP	NAVSEA DRAWING NO.	REV
	B	53711	904	4398614	P
	SCALE – NONE			SHEET 49	

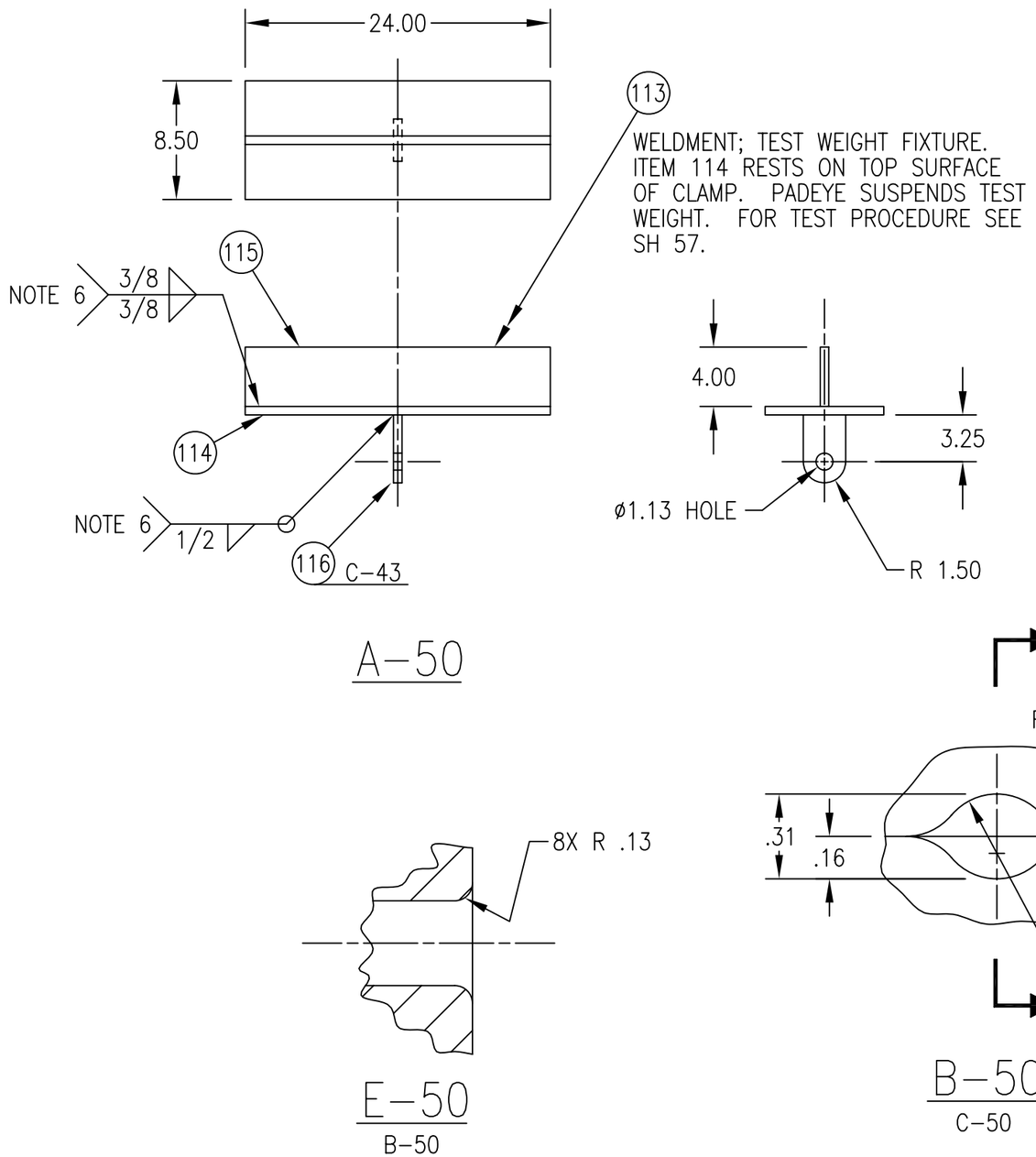

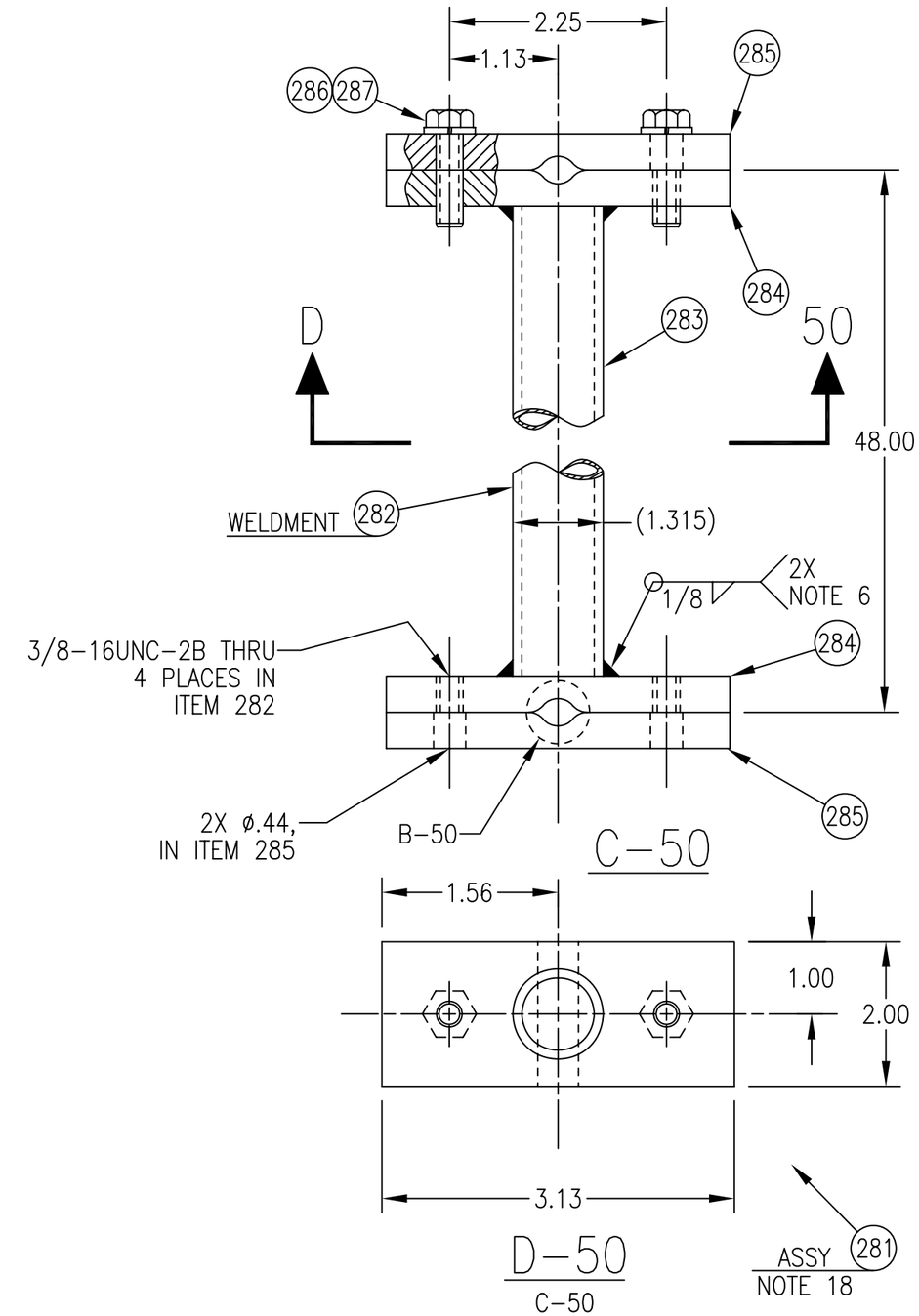

TEST FIXTURE AND SPREADER BAR ASSY	SIZE	CAGE NO.	WT GRP	NAVSEA DRAWING NO.	REV
	B	53711	904	4398614	V
	SCALE – NONE			SHEET 50	

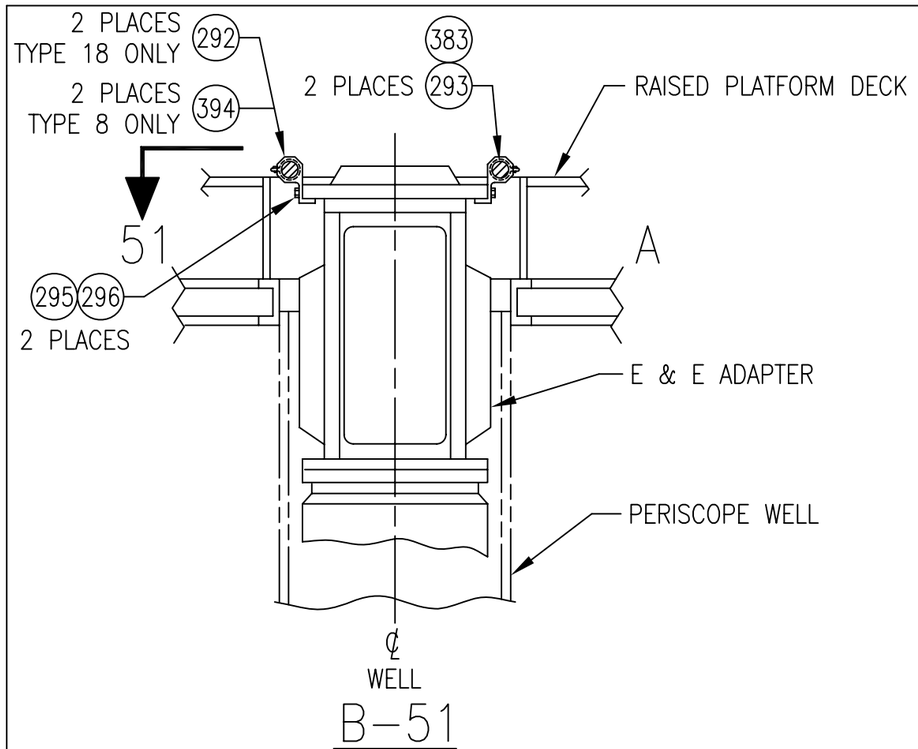

B–51

E & E ADAPTER SUPPORT BAR ARRANGEMENT
SEE NOTE 46

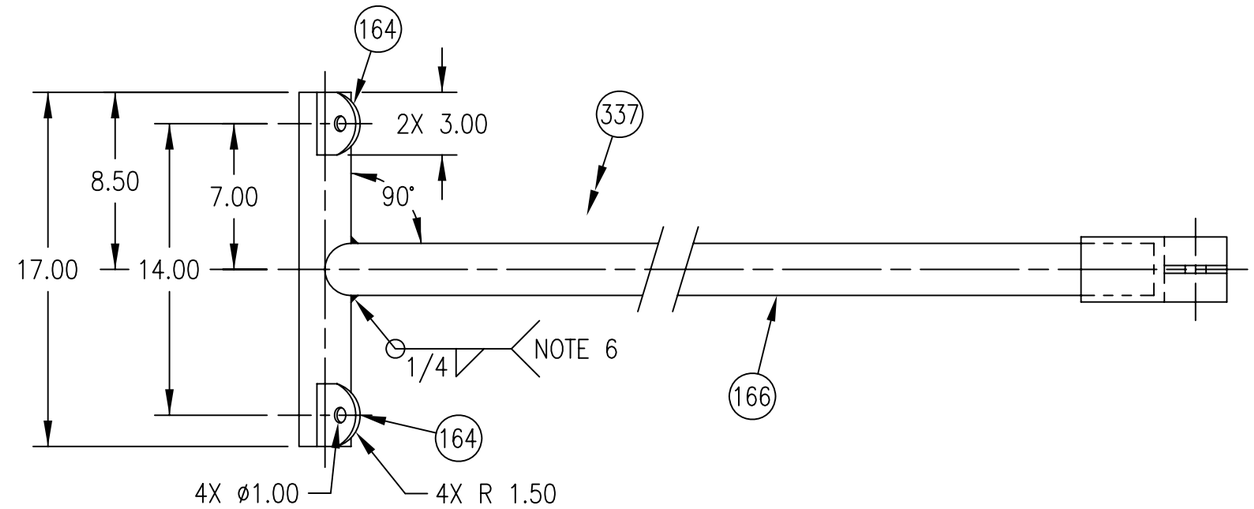

D–51
C–51

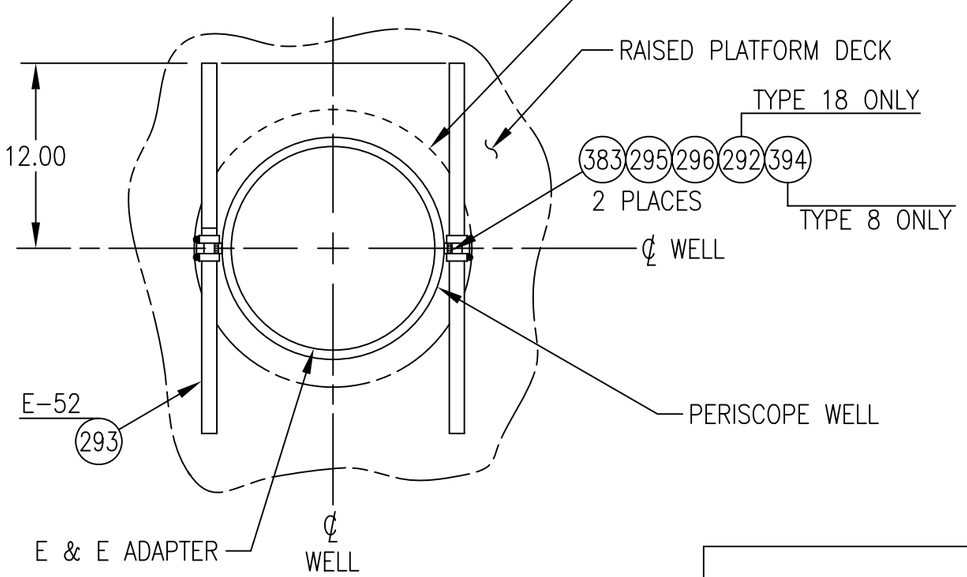

A–51
B–51

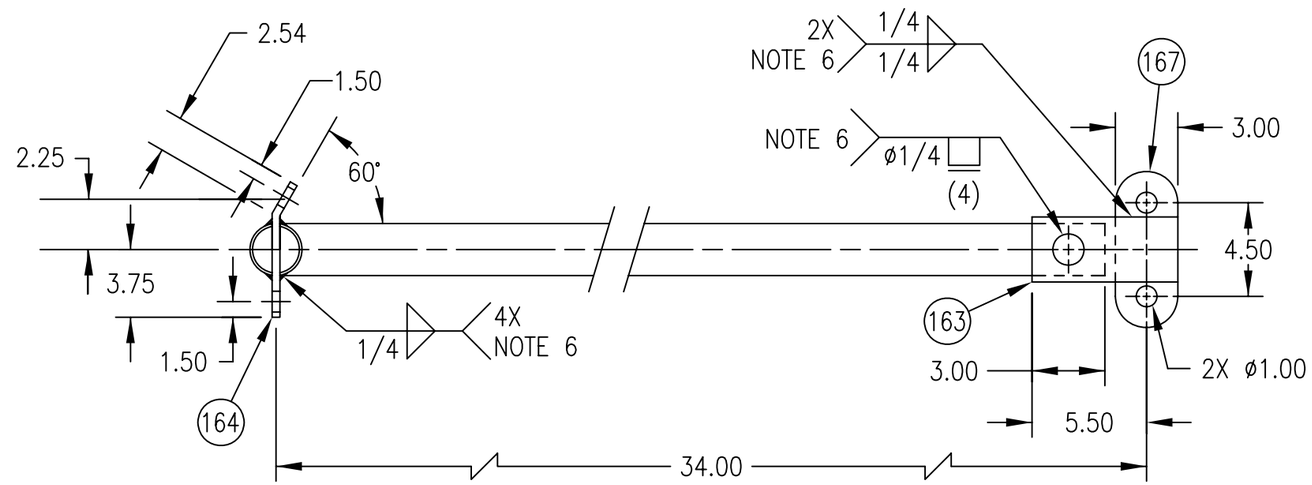

C–51
SSN 21 FAIRING "T" BAR ASSY

TYPE 8 & 18 E & E ADAPTER SUPPORT BAR ARR & SSN 21 FAIRING "T" BAR ASSY	SIZE	CAGE NO.	WT GRP	NAVSEA DRAWING NO.	REV
	B	53711	904	4398614	V
	SCALE – NONE			SHEET 51	

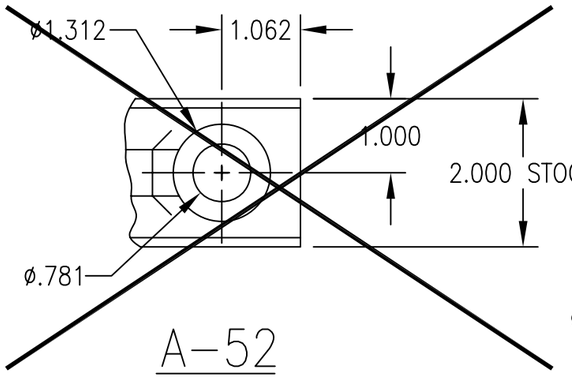

A–52
B–52

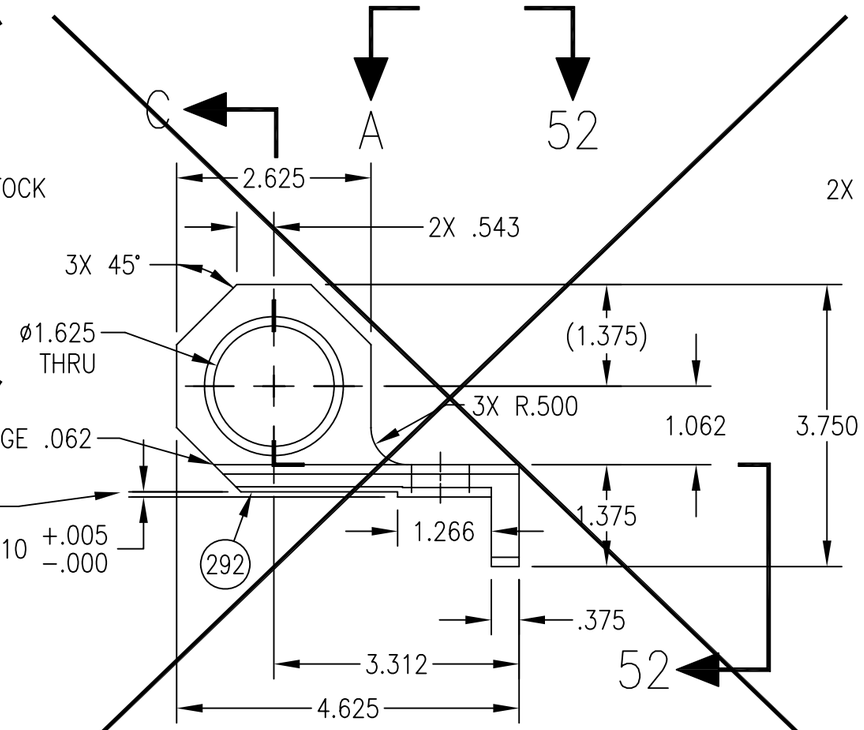

B–52

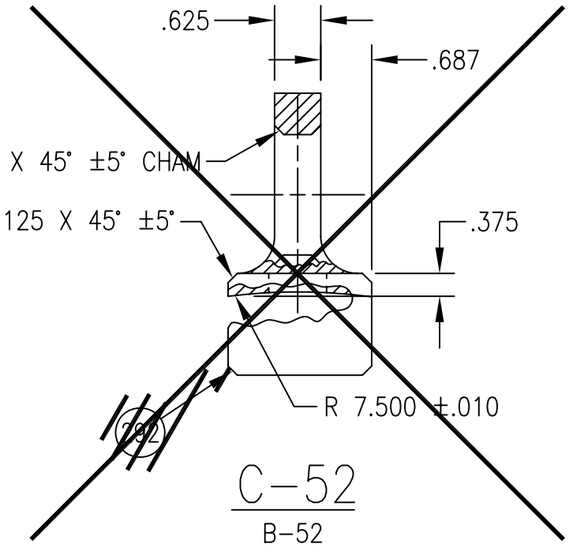

C–52
B–52

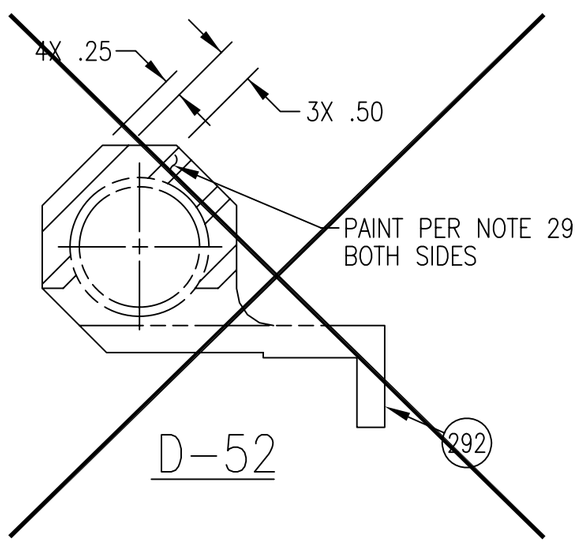

D–52

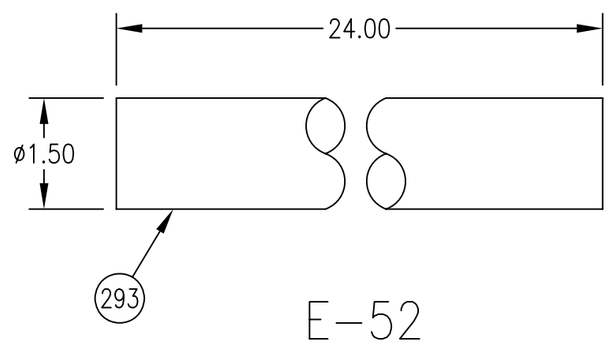

E–52

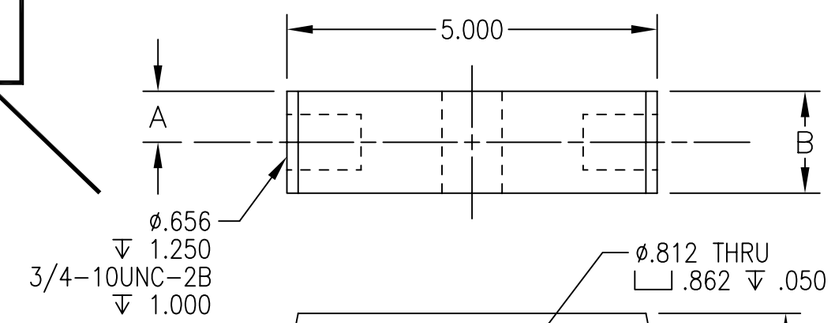

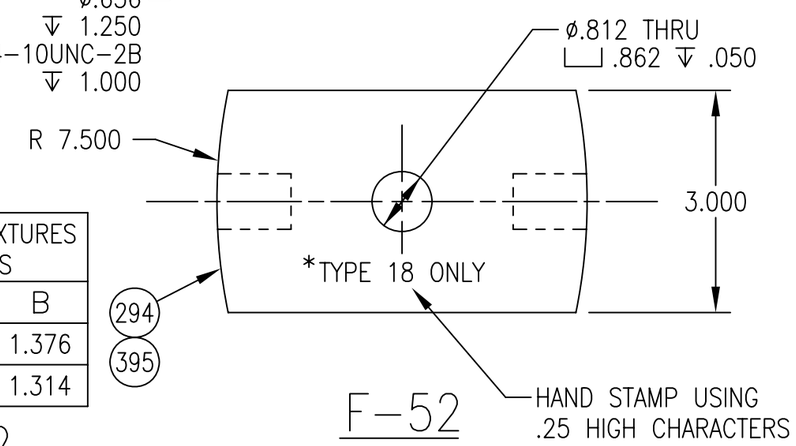

F–52

WEIGHT TEST FIXTURES DIMENSIONS		
ITEM	A	B
294	.688	1.376
395	.657	1.314

G–52
F–52

* STAMP "TYPE 8 ONLY" FOR 395

~~LIFTING EYE,~~ SUPPORT BAR AND WEIGHT TEST FIXTURE	SIZE	CAGE NO.	WT GRP	NAVSEA DRAWING NO.	REV
	B	53711	904	4398614	V
	SCALE – NONE			SHEET 52	

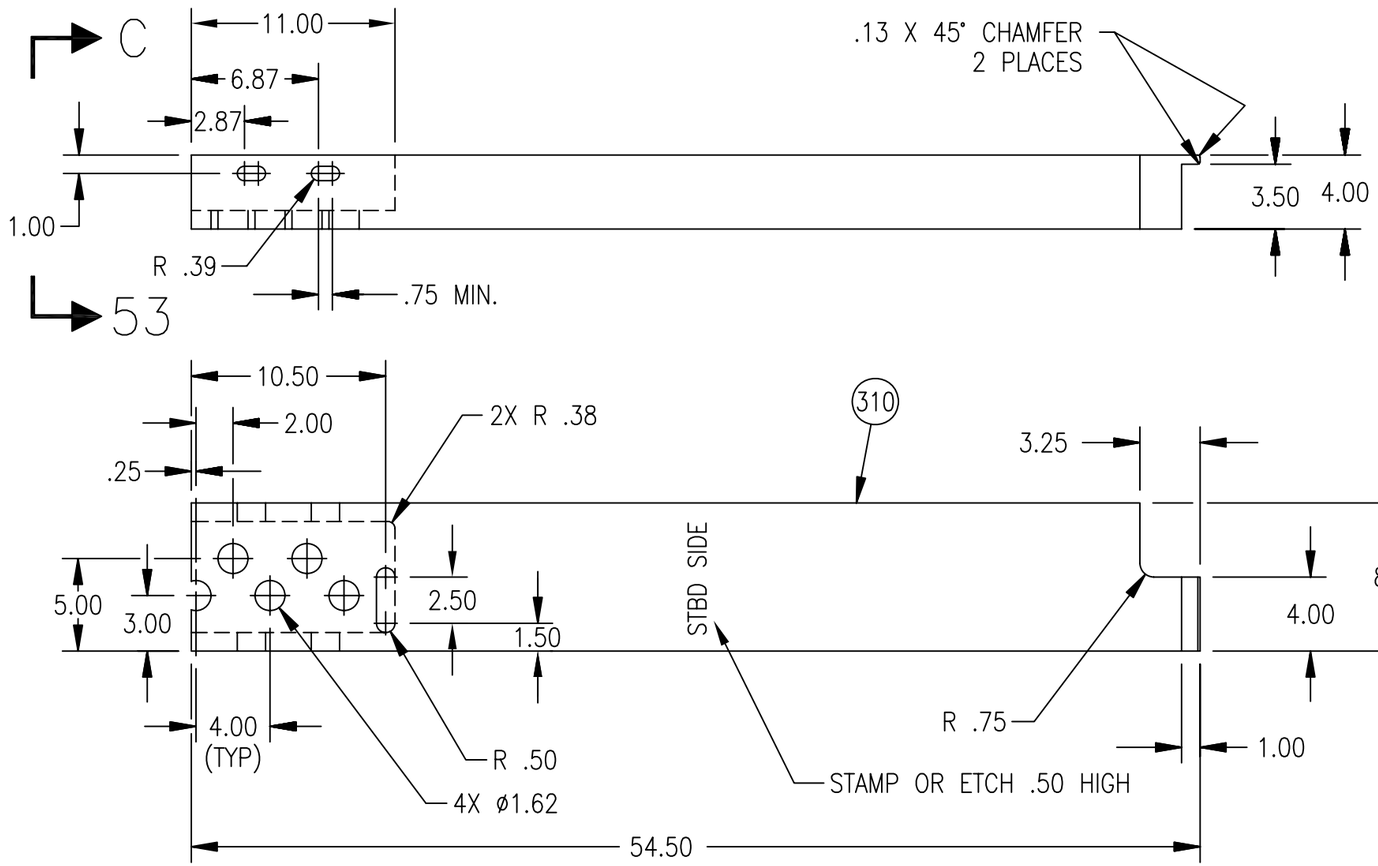

A–53

STARBOARD SIDE

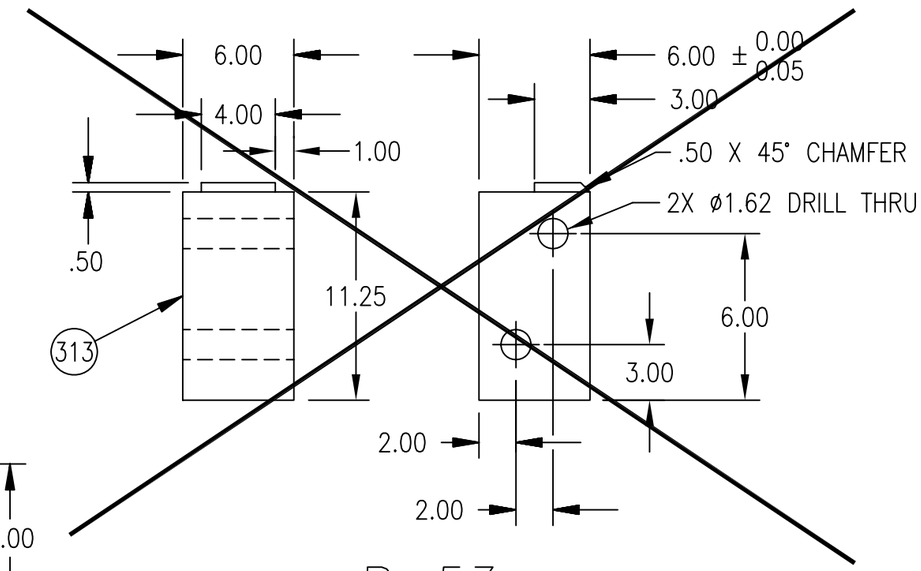

B–53

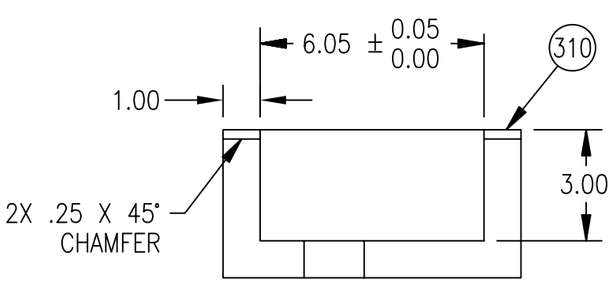

HIDDEN LINES OMITTED FOR CLARITY

C–53

A–53

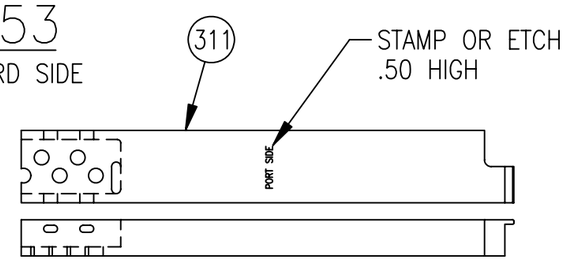

PORT SIDE

SEE 310 FOR DIMENSIONS

D–53

A–53

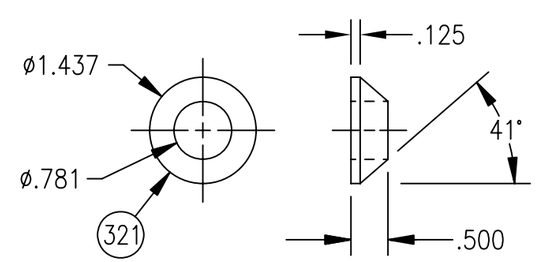

E–53

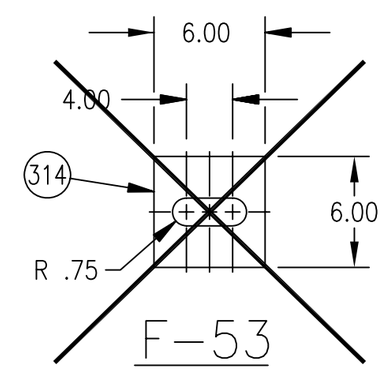

F–53

SUPPORT LEG & END CAP	SIZE	CAGE NO.	WT GRP	NAVSEA DRAWING NO.	REV
	B	53711	904	4398614	T
	SCALE – NONE			SHEET 53	

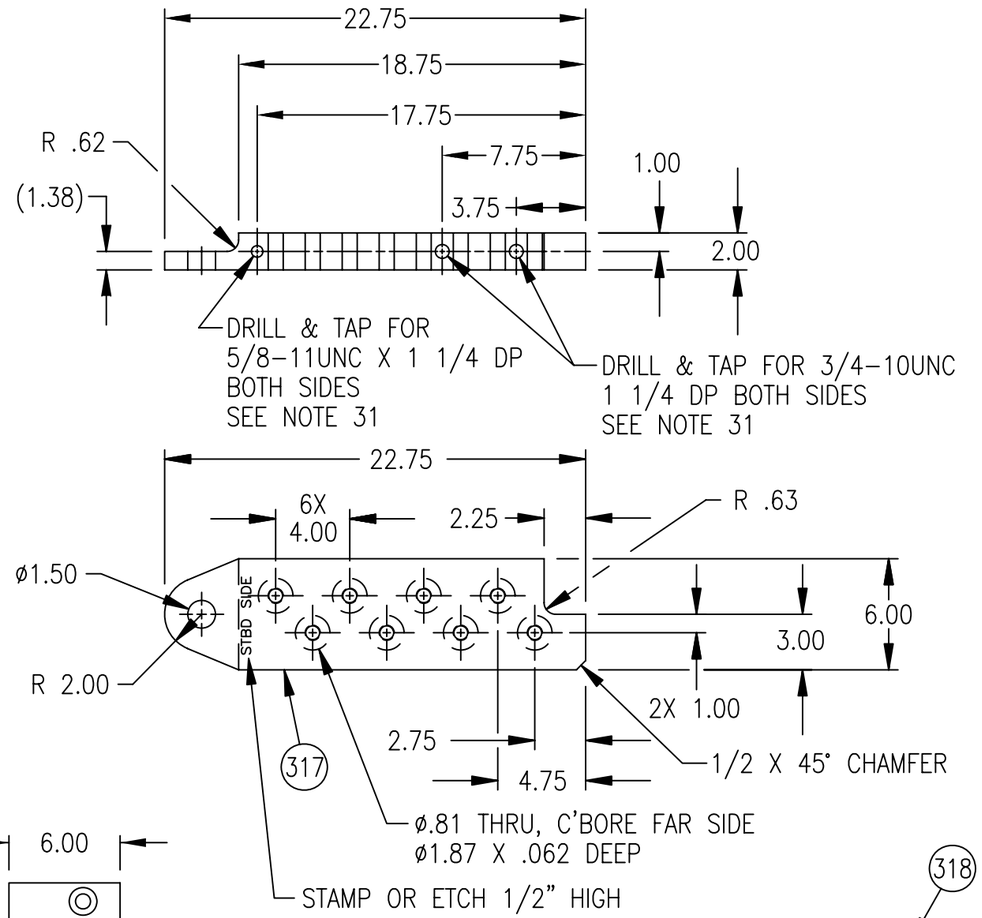

A-54

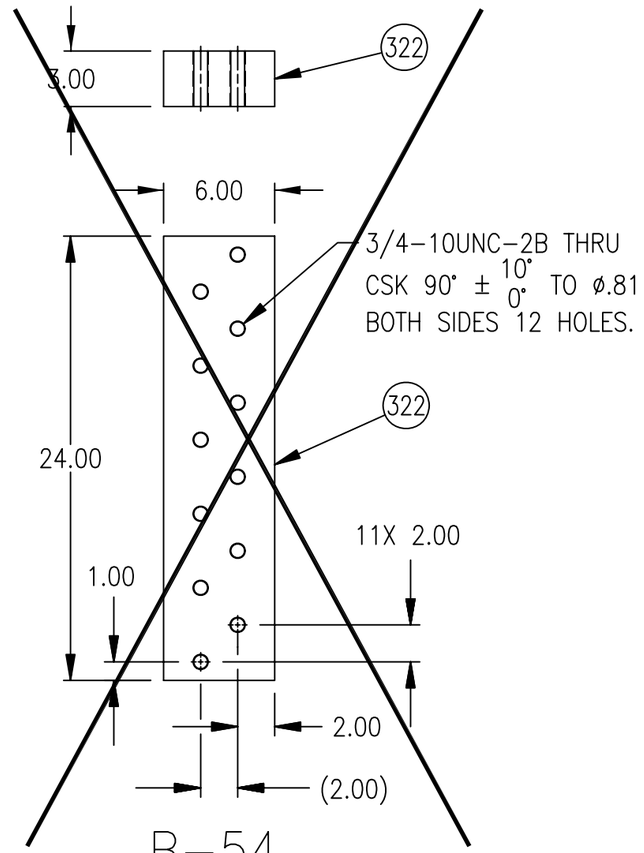

B-54

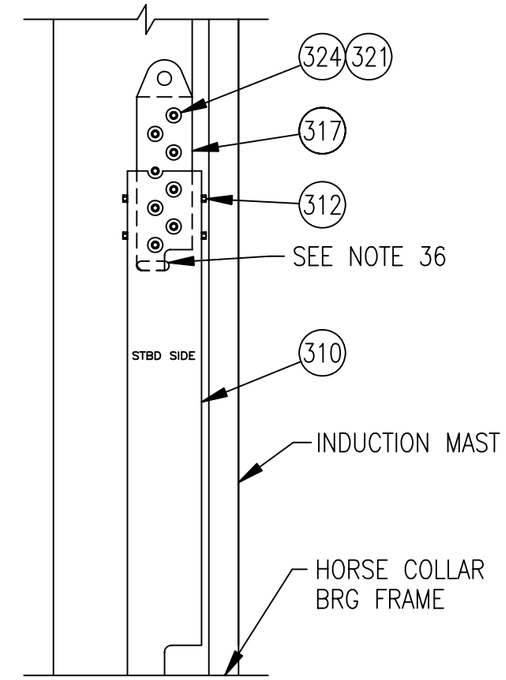

C-54 (309)

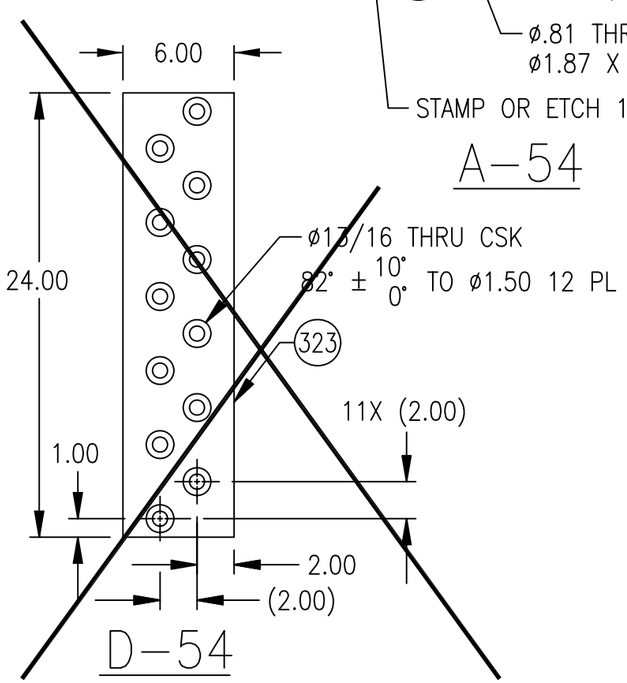

D-54

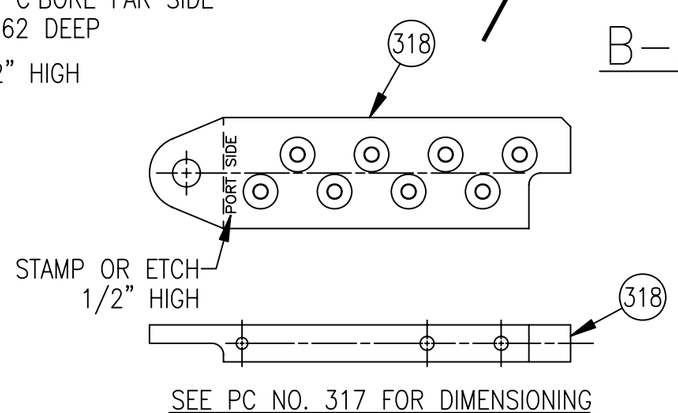

SEE PC NO. 317 FOR DIMENSIONING

E-54

A-54

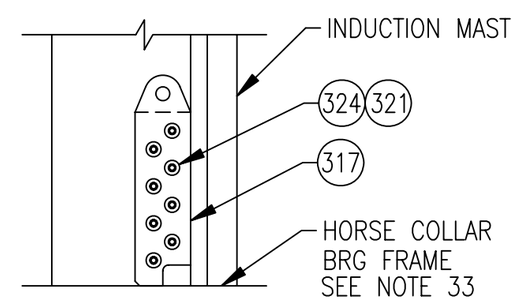

F-54

	SIZE	CAGE NO.	WT GRP	NAVSEA DRAWING NO.	REV
LIFTING BLOCK ~~& TEST PLATE~~	B	53711	904	4398614	V
	SCALE – NONE			SHEET 54	

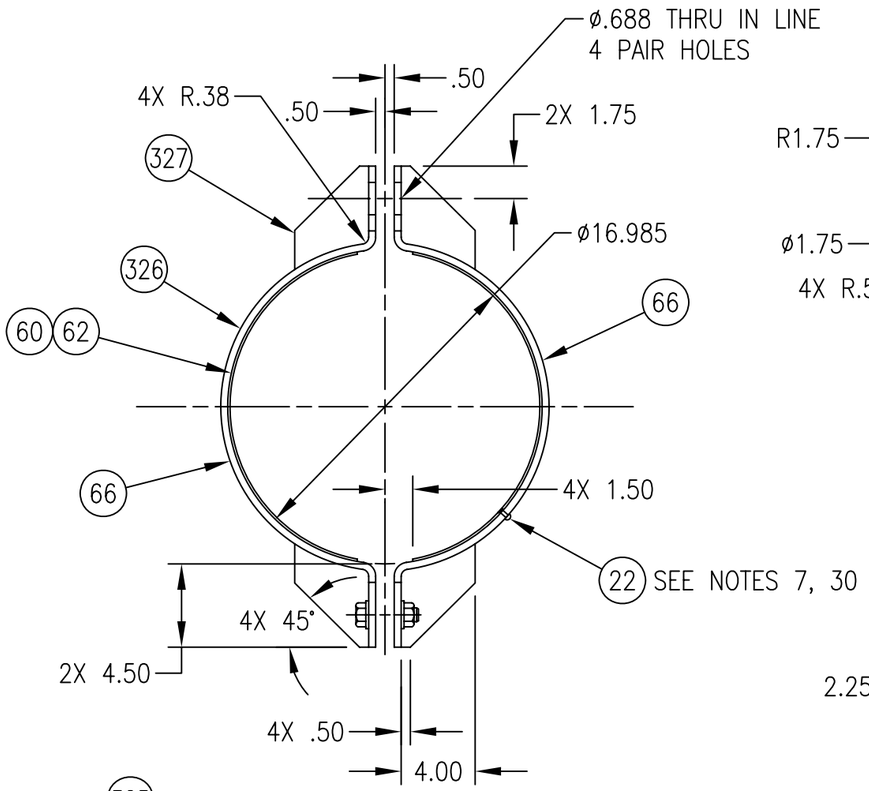

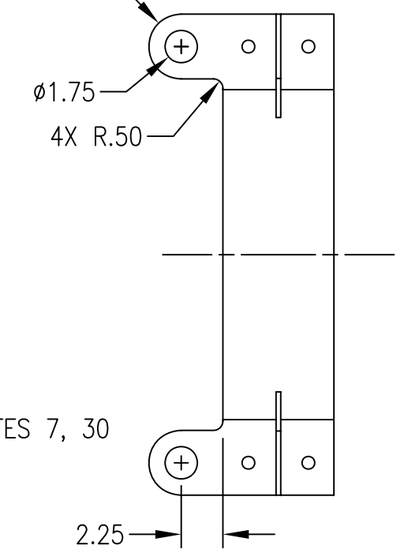

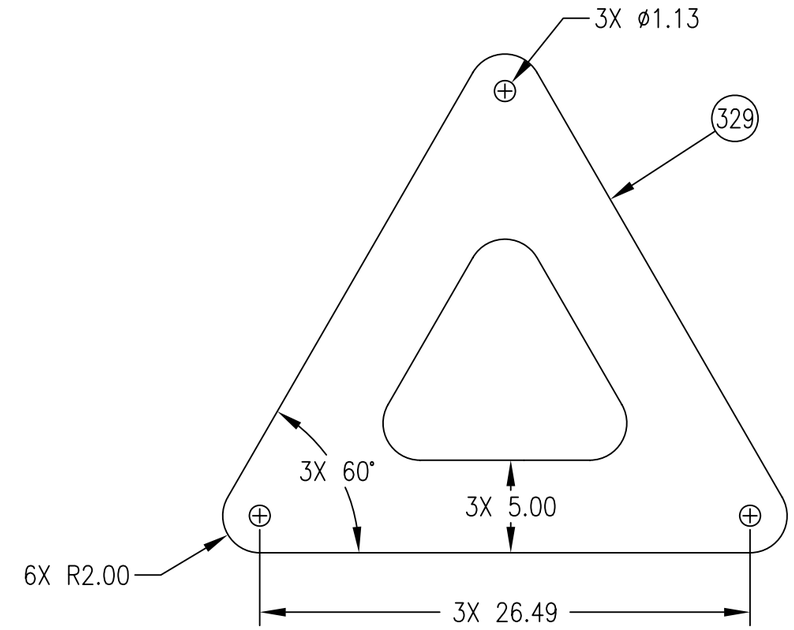

B–55

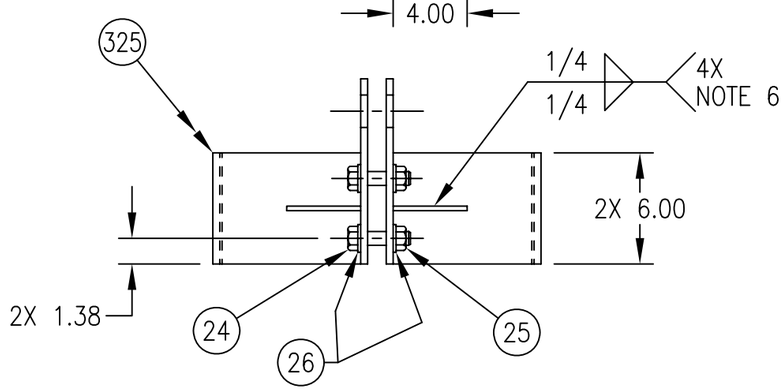

A–55

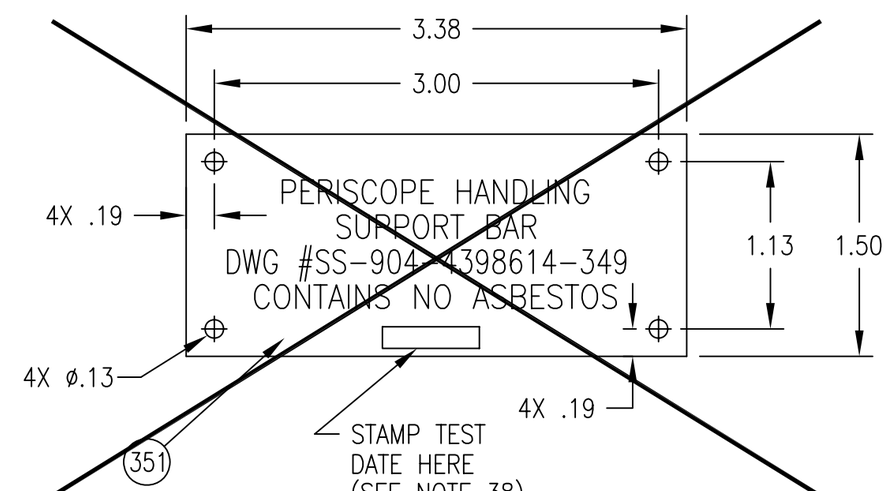

C–55

ASSY 325 – SNORKEL INNER INDUCTION PIPE ~~MAST~~ LIFTING CLAMP AND SPREADER BAR	SIZE	CAGE NO.	WT GRP	NAVSEA DRAWING NO.	REV
	B	53711	904	4398614	U
	SCALE – 1/8			SHEET 55	

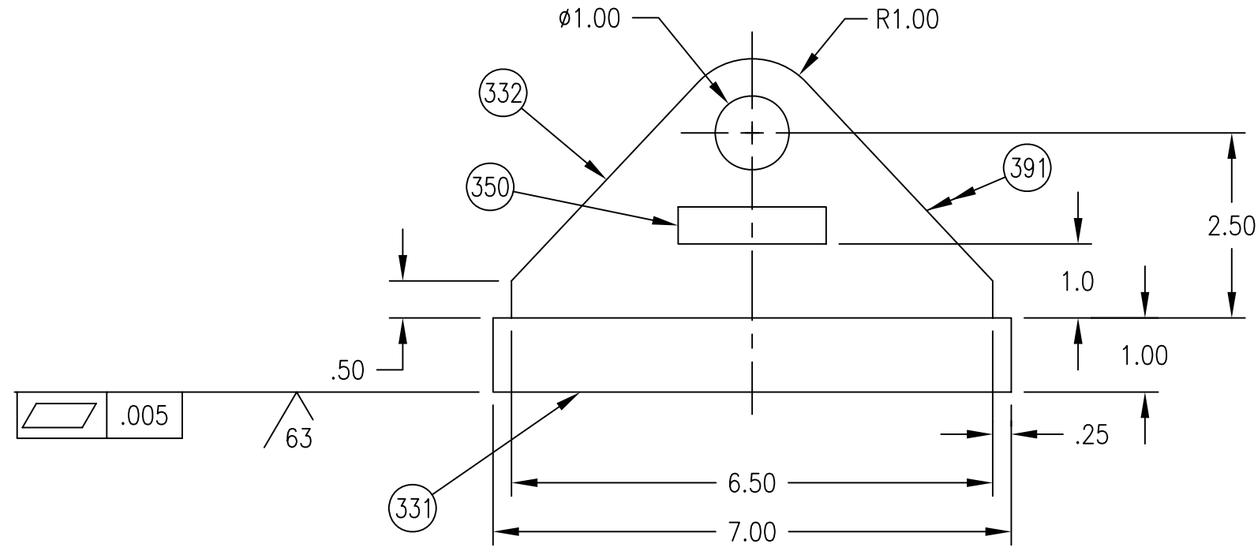

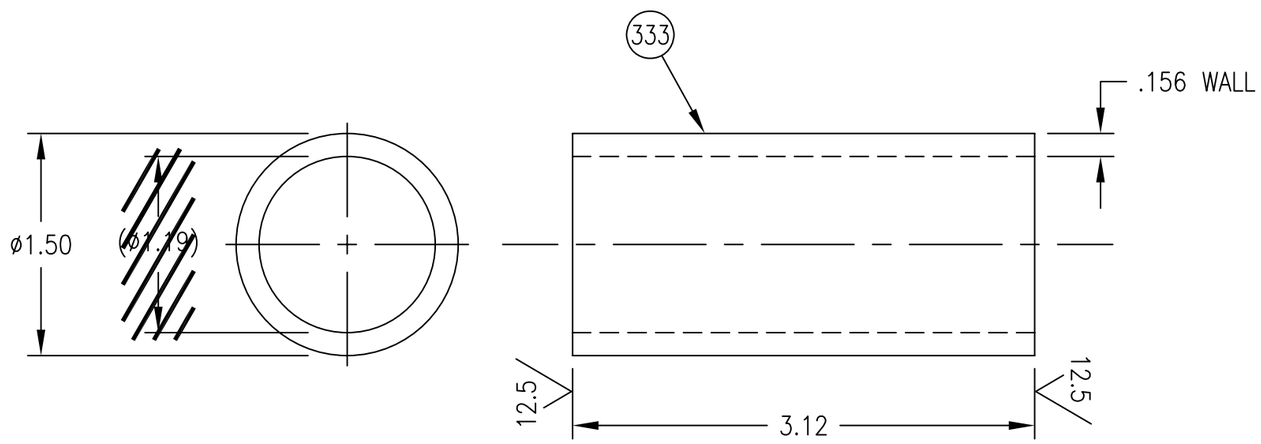

A–56

~~SLEEVE~~

SCALE: 1/1

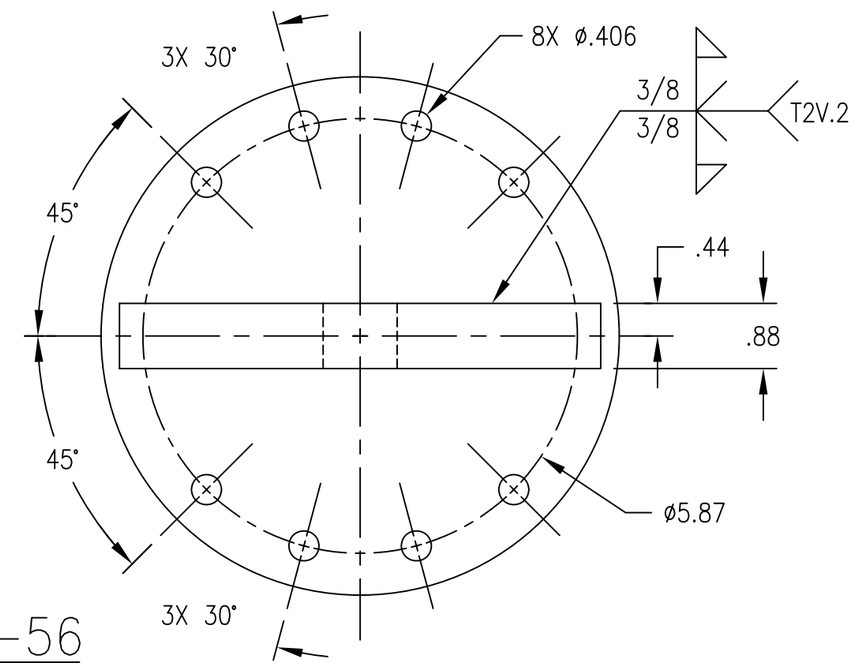

B–56

~~LIFTING DEVICE~~

ASSY 330 – ~~RADAR LIFTING DEVICE~~ BPS–16 RADAR MAST FIXTURES (CONTINUED ON SHEET 74)	SIZE	CAGE NO.	WT GRP	NAVSEA DRAWING NO.	REV
	B	53711	904	4398614	V
	SCALE – 1/2			SHEET 56	

NOTES

TEST PROCEDURE FOR NEW AND IN-SERVICE WEIGHT HANDLING EQUIPMENT:

NOTE

IT IS MANDATORY THAT CLAMP HALVES BE KEPT IN A MATCHED SET BY SERIAL NUMBERS. FAILURE TO DO SO NEGATES THE WEIGHT TEST AND HOLDING CAPACITY TEST.

1. THIS PROCEDURE IS TO PROVIDE GUIDANCE FOR CONDUCTING THE FOLLOWING TESTS FOR LIFTING CLAMPS, SLINGS, AND OTHER HANDLING EQUIPMENT:

   - WEIGHT TEST
   - HOLDING CAPACITY TEST

2. SAFETY PRECAUTIONS SHALL BE OBSERVED AT ALL TIMES DURING THE TEST TO PREVENT PERSONNEL INJURY OR DAMAGE TO ADJACENT EQUIPMENT IN THE EVENT OF FAILURE.

3. A COMPLETE INSPECTION OF ALL COMPONENTS TO BE USED FOR THE WEIGHT TEST AND THE HOLDING CAPACITY TEST SHALL BE CONDUCTED PRIOR TO THEIR USAGE.

4. THE WEIGHT TEST AND THE HOLDING CAPACITY TEST OF LIFTING CLAMPS AND SLING ASSEMBLIES SHALL BE PERFORMED AT INTERVALS NOT TO EXCEED FOUR (4) YEARS (SEE NOTE 38). HOWEVER, IF ANY REPAIRS OR MODIFICATIONS ARE MADE TO THE WEIGHT HANDLING EQUIPMENT AFTER AN INSPECTION, THE REPAIRED EQUIPMENT SHALL BE RETESTED.

NOTE

PER S9086-XG-STM-010/CH-700, PARA 700-4.5.2.3, THE TEST WEIGHT SHALL BE WITHIN A PLUS TOLERANCE OF 5% OR 200 LBS WHICHEVER IS SMALLER.

5. WEIGHT TESTS:

WARNING

NONDESTRUCTIVE TEST ON ALL LIFTING EQUIPMENT WELDING BEFORE AND AFTER THE WEIGHT TEST IAW GENERAL NOTE 6. ~~NO DEFECT IS ALLOWED.~~

5.1. WEIGHT TEST FOR LIFTING CLAMPS:

NOTE

THE CLAMP WEIGHT TEST CAN BE CONDUCTED SIMULTANEOUSLY WITH THE HOLDING CAPACITY TEST IN ACCORDANCE WITH 6.1.

5.1.1. THE TEST FIXTURES (PC 112 OR PC 113) AND CLAMP SPACER (PC 18) SHALL BE USED FOR TESTING THE LIFTING CLAMP AND BE ARRANGED AS SHOWN IN FIGURES 1 AND 2.

NOTE

FOR ASSEMBY ~~202 AND~~ 298, THE TEST~~S~~ ~~ARE~~ IS ARRANGED AS SHOWN IN FIGURE ~~7 AND~~ 13. ~~RESPECTIVELY.~~

5.1.2 THE WEIGHT PLACEMENT METHOD SPECIFIED FOR EACH CLAMP ASSEMBLY IS GIVEN IN TABLE 1.

5.1.3. APPLY THE REQUIRED LOAD AS INDICATED ON SHEET 62 IN TABLE 1.

5.1.4. THE LOAD SHALL BE HELD FOR AT LEAST TEN (10) MINUTES.

5.1.5. AFTER THE WEIGHT TEST, THE CLAMP SHALL BE VISUALLY INSPECTED FOR BUCKLING AND FRACTURE. NO BUCKLING OR FRACTURE IS ALLOWED.

WARNING

NONDESTRUCTIVE TEST ON ALL LIFTING EQUIPMENT WELDING BEFORE AND AFTER THE WEIGHT TEST IAW GENERAL NOTE 6. ~~NO DEFECT IS ALLOWED.~~

5.2. WEIGHT TEST FOR STRONGBACK (PC 247):

5.2.1. THE TEST SETUP SHALL BE ARRANGED AS SHOWN ON SHEET 49.

5.2.2. AFTER THE WEIGHT TEST, THE STRONGBACK SHALL BE VISUALLY INSPECTED FOR BUCKLING AND FRACTURE. NO BUCKLING OR FRACTURE IS ALLOWED.

WARNING

NONDESTRUCTIVE TEST ON ALL LIFTING EQUIPMENT WELDING BEFORE AND AFTER THE WEIGHT TEST IAW GENERAL NOTE 6. ~~NO DEFECT IS ALLOWED.~~

5.3. WEIGHT TEST FOR BUOY HANDLING EQUIPMENT:

TESTS SHALL BE CONDUCTED ON THE SEQUENCE OF STATIC OVERLOAD, DYNAMIC OVERLOAD, AND FULL LOAD. THE METHOD OF ATTACHING EQUIPMENT IS ILLUSTRATED IN FIG. 5.

NOTE

ALL MATERIAL (CABLES, SHACKLES, AND SO FORTH) USED TO DOCKSIDE TEST THE BUOY SHALL BE TESTED AS A UNIT.

5.3.1. STATIC OVERLOAD:

A. ATTACH BUOY LIFTING RIG TO A 5,500 POUND TEST WEIGHT. CRANE LIFT WILL BE 11,000 POUNDS.

B. ATTACH THE BUOY LIFTING RIG TO ONE END OF THE DOCKSIDE TESTING MECHANISM CABLE.

C. ATTACH THE OTHER END OF THE CABLE TO THE PADEYE ON THE DECK.

D. ATTACH THE DOCKSIDE TESTING MECHANISM TO THE CRANE.

E. HAVE THE CRANE LIFT THE WEIGHT TO APPROXIMATELY 6 INCHES ABOVE THE DECK.

F. HOLD THE WEIGHT FOR TEN (10) MINUTES. LOWER THE WEIGHT TO THE DECK.

G. DISCONNECT THE TEST WEIGHT.

H. INSPECT CABLE FOR SIGNS OF DAMAGE OR PERMANENT DISTORTION. CONDUCT POST TEST INSPECTION OF WEIGHT HANDLING EQUIPMENT. NO DAMAGE OR DISTORTION IS ALLOWED.

5.3.2. DYNAMIC OVERLOAD:

A. ATTACH THE BUOY LIFTING RIG TO A 3,300 POUND TEST WEIGHT. CRANE LIFT WILL BE 6,600 POUNDS.

B. THE LOAD SHALL BE RAISED THROUGH THE FULL LIFT HEIGHT AND LOWERED AGAIN, STOPPING THREE (3) TIMES IN EACH DIRECTION. ENSURE THAT THE SHEAVES TURN FREELY DURING MOVEMENT.

C. DISCONNECT THE TEST WEIGHT AND INSPECT THE CABLE FOR DAMAGE OR PERMANENT DISTORTION. CONDUCT POST TEST INSPECTION OF THE WEIGHT HANDLING EQUIPMENT. NO DAMAGE OR DISTORTION IS ALLOWED.

5.3.3. FULL LOAD TEST:

A. ATTACH THE BUOY LIFTING RIG TO A 2,200 POUND TEST WEIGHT. CRANE LIFT WILL BE 4,400 POUNDS.

B. RAISE AND LOWER FOR THE FULL HEIGHT OF THE LONGEST OPERATIONAL LIFT. REPEAT FOR TEN (10) CYCLES. MOVING THE LOAD UP AND DOWN THROUGH THE FULL LIFT RANGE IS ONE (1) CYCLE.

C. DISCONNECT THE TEST WEIGHT AND INSPECT THE CABLE FOR DAMAGE OR PERMANENT DISTORTION. CONDUCT POST TEST INSPECTION OF THE WEIGHT HANDLING EQUIPMENT. NO DAMAGE OR DISTORTION IS ALLOWED.

5.4. WEIGHT TEST FOR THE NYLON SAFETY STRAP:

5.4.1. ATTACH THE NYLON SAFETY STRAP TO A 6,000 POUND TEST WEIGHT AND CRANE HOOK AS SHOWN IN FIGURE 3.

5.4.2. ENSURE THAT THE NYLON SAFETY STRAP IS PROPERLY SECURED AT THE D-RING.

NOTE

TIE OFF THE LOOSE END CLOSE TO THE D-RING, IN ACCORDANCE WITH GOOD SAFETY PRACTICES, TO PREVENT THE NYLON SAFETY STRAP FROM SLIPPING BACK THROUGH THE D-RING.

5.4.3. LIFT THE TEST WEIGHT APPROXIMATELY SIX INCHES OFF THE DECK.

5.4.4. HOLD FOR TEN (10) MINUTES, THEN LOWER THE TEST WEIGHT TO THE DECK.

5.4.5 DISCONNECT THE TEST WEIGHT AND INSPECT THE NYLON SAFETY STRAP AND D-RING FOR DAMAGE. NO DAMAGE IS ALLOWED.

5.5. WEIGHT TEST FOR THE LIFTING SLING:

5.5.1. USE THE SAME PROCEDURES AS THE NYLON SAFETY STRAP.

5.5.2. SEE SHEET 62, TABLE 1 FOR THE REQUIRED TEST WEIGHT.

5.6. WEIGHT TEST FOR THE SAFETY STOP PIN:

5.6.1. ATTACH A 2,000 POUND WEIGHT TO EACH SIDE OF THE SAFETY STOP PIN AS SHOWN IN FIGURE 6. THE WEIGHT SHALL BE SUSPENDED APPROXIMATELY SIX INCHES ABOVE THE DECK.

5.6.2. KEEP THE WEIGHTS IN THE SUSPENDED POSITION FOR TEN (10) MINUTES, THEN REMOVE THE WEIGHTS.

5.6.3. REMOVE THE SAFETY STOP PIN ASSEMBLY FROM THE TEST BLOCK AND VISUALLY INSPECT THE COMPONENTS FOR EVIDENCE OF CRACKING OR PERMANENT DISTORTION THAT PREVENTS THE PROPER MATING OF THE PIN AND NUT. NO CRACKING OR DISTORTION IS ALLOWED.

5.7. WEIGHT TEST FOR THE E&E ADAPTER SUPPORT BARS AND LIFTING EYES: (TYPE 8 & 18 PERISCOPE)

5.7.1. ADAPTER LIFTING EYES:

TESTS SHALL BE CONDUCTED ON THE SEQUENCE OF STATIC LOAD AND STATIC OVERLOAD.

A. STATIC LOAD TEST:

(1) ATTACH TWO E&E ADAPTER LIFTING EYES TO THE TEST FIXTURE AS ILLUSTRATED IN FIGURE 10. WEIGHT TEST TO 3,400 POUNDS AND HOLD FOR 3 MINUTES.

(2) DISCONNECT THE ASSEMBLY AND CONDUCT THE VISUAL INSPECTION OF THE LIFTING EYES FOR DAMAGE OR PERMANENT DISTORTION.

B. STATIC OVERLOAD TEST:

(1) ATTACH TWO E&E ADAPTER LIFTING EYES TO THE TEST FIXTURE AS ILLUSTRATED IN FIGURE 10. WEIGHT TEST TO 6,800 POUNDS AND HOLD FOR 3 MINUTES.

(2) DISCONNECT THE ASSEMBLY AND CONDUCT THE VISUAL INSPECTION OF THE LIFTING EYES FOR DAMAGE OR PERMANENT DISTORTION.

5.7.2. ADAPTER SUPPORT RODS:

TESTS SHALL BE CONDUCTED ON THE SEQUENCE OF STATIC LOAD AND STATIC OVERLOAD.

A. STATIC LOAD TEST:

(1) ATTACH ONE E&E ADAPTER SUPPORT ROD TO THE TEST FIXTURE AS ILLUSTRATED IN FIGURE 11. WEIGHT TEST TO 1,700 POUNDS AND HOLD FOR 3 MINUTES.

(2) DISCONNECT THE ASSEMBLY AND CONDUCT THE VISUAL INSPECTION OF THE SUPPORT ROD FOR DAMAGE OR PERMANENT DISTORTION. NO DAMAGE OR DISTORTION IS ALLOWED.

(3) REPEAT THIS PROCESS FOR THE SECOND ADAPTER SUPPORT ROD.

B. STATIC OVERLOAD TEST:

(1) ATTACH ONE E&E ADAPTER SUPPORT ROD TO THE TEST FIXTURE AS ILLUSTRATED IN FIGURE 11. WEIGHT TEST TO 3,400 POUNDS AND HOLD FOR 3 MINUTES.

(2) DISCONNECT THE ASSEMBLY AND CONDUCT THE VISUAL INSPECTION OF THE SUPPORT ROD FOR DAMAGE OR PERMANENT DISTORTION. NO DAMAGE OR DISTORTION IS ALLOWED.

(3) REPEAT THIS PROCESS FOR THE SECOND ADAPTER SUPPORT ROD.

WARNING

NONDESTRUCTIVE TEST ON ALL LIFTING EQUIPMENT WELDING BEFORE AND AFTER THE WEIGHT TEST IAW GENERAL NOTE 6. ~~NO DEFECT IS ALLOWED.~~

5.8. WEIGHT TEST FOR THE AN/BLD-1, AN/BRD-7 ANTENNA LIFTING RIG:

5.8.1. STATIC TEST FOR AN/BLD-1 ANTENNA LIFTING RIG:

A. SUSPEND THE HANDLING FRAME ASSEMBLY BY 1/2" WIRE ROPE AS SHOWN IN FIGURE 4.

B. PLACE AND BOLT A 1/2" THICK SUPPORT PLATE TO THE LIFTING PLATE WELDMENT ON THE LIFTING RIG.

C. SECURE A 3/4" EYEBOLT TO THE PLATE USING A HEAVY FLAT WASHER AND NUT.

D. SUSPEND A WEIGHT OF 3,000 POUNDS FROM THE EYEBOLT FOR A PERIOD OF NOT LESS THAN TEN (10) MINUTES.

E. REMOVE THE WEIGHT AND INSPECT THE HOLDING FRAME ASSEMBLY COMPONENTS FOR BENDING, BUCKLING, ELONGATION, CRACKS OR MATERIAL DEFORMATIONS ARE NOT ALLOWED.

5.8.2. STATIC TEST FOR AN/BRD-7 ANTENNA LIFTING RIG:

A. SUSPEND THE HANDLING FRAME ASSEMBLY BY 3/8" WIRE ROPE AS SHOWN IN FIGURE 17.

B. PLACE THE SUPPORT PLATE INTO THE LIFTING RIG SO THAT IT RESTS EVENLY ON THE BOTTOM SUPPORT ANGLE.

C. SECURE A 1/2" EYEBOLT TO THE PLATE USING A HEAVY FLAT WASHER (1/8" MINIMUM THICKNESS) AND A NUT.

D. SUSPEND A WEIGHT OF 1,000 POUNDS FROM THE EYEBOLT FOR A PERIOD OF NOT LESS THAN TEN (10) MINUTES.

E. REMOVE THE WEIGHT AND INSPECT THE HOLDING FRAME ASSEMBLY COMPONENTS FOR BENDING. BUCKLING, ELONGATION, CRACKS OR MATERIAL DEFORMATIONS ARE NOT ALLOWED.

5.9. WEIGHT TEST FOR THE SPREADER BAR (ASSEMBLIES 69, 281 AND 379):

5.9.1. NO WEIGHT TEST IS REQUIRED FOR THE SPREADER BAR. VISUALLY INSPECT THE SPREADER BAR PRIOR TO USAGE.

~~WARNING~~

~~NONDESTRUCTIVE TEST ON ALL LIFTING EQUIPMENT WELDING BEFORE AND AFTER THE WEIGHT TEST IAW GENERAL NOTE 6. NO DEFECT IS ALLOWED.~~

~~5.10. WEIGHT TEST FOR THE SNORKEL FAIRED MAST CLAMP (ASSY 202)~~

~~5.10.1. INSERT AND BOLT SPACER ITEM 215 BETWEEN CLAMP HALVES.~~

~~5.10.2. APPLY A DISTRIBUTED TEST WEIGHT TO CLAMP ASSEMBLY USING A PLATE TO DISTRIBUTE THE LOAD, AS SHOWN IN FIGURE 7.~~

~~5.10.3. ATTACH THE TEST LOAD OF 10,000 LBS TO THE PLATE IN EACH OF TWO PLACES AS SHOWN IN FIGURE 7 USING EYEBOLTS.~~

~~5.10.4. AFTER THE WEIGHT TEST, THE CLAMP SHALL BE VISUALLY INSPECTED FOR BUCKLING AND FRACTURE. NO BUCKLING OR FRACTURE IS ALLOWED.~~

WARNING

NONDESTRUCTIVE TEST ON ALL LIFTING EQUIPMENT WELDING BEFORE AND AFTER THE WEIGHT TEST IAW GENERAL NOTE 6. ~~NO DEFECT IS ALLOWED.~~

5.11. WEIGHT TEST FOR THE LIFTING LUGS (297) AND SUPPORT BRACKETS (372, 373): USE STEP 5.1 WITH THE SETUP IN FIG. 12.

NOTE

NO RECERTIFICATION REQUIRED UPON SUCCESSFUL COMPLETION OF TESTING.

~~WARNING~~

~~NONDESTRUCTIVE TEST ON ALL LIFTING EQUIPMENT WELDING BEFORE AND AFTER THE WEIGHT TEST IAW GENERAL NOTE 6. NO DEFECT IS ALLOWED.~~

~~5.12. WEIGHT TEST FOR THE SUPPORT CLAMP (ASSEMBLY 226):~~

~~NOTE~~

~~THIS CLAMP IS NOT USED AS A LIFTING CLAMP. IT IS USED FOR SUPPORTING THE E&E ADAPTER WHEN REMOVING THE PERISCOPE.~~

~~5.12.1. PLACE 1000 LBS WEIGHT ON THE TOP OF PC 228 FOR TEN (10) MINUTES.~~

~~5.12.2. AFTER THE WEIGHT TEST, THE CLAMP SHALL BE VISUALLY INSPECTED FOR BUCKLING AND FRACTURE. NO BUCKLING OR FRACTURE IS ALLOWED.~~

WARNING

NONDESTRUCTIVE TEST ON ALL LIFTING EQUIPMENT WELDING BEFORE AND AFTER THE WEIGHT TEST IAW GENERAL NOTE 6. ~~NO DEFECT IS ALLOWED.~~

5.13. WEIGHT TEST FOR THE SLIDING CLAMP (ASSEMBLY 232):

5.13.1. TEST SLIDING CLAMP WITH 6000 LBS WEIGHT ATTACHED TO BOTTOM LIFTING HOLES AND HOLD FOR TEN (10) MINUTES.

5.13.2. AFTER THE WEIGHT TEST, THE CLAMP SHALL BE VISUALLY INSPECTED FOR BUCKLING AND FRACTURE. NO BUCKLING OR FRACTURE IS ALLOWED.

5.14. WEIGHT TEST FOR THE SNORKEL LIFTING BLOCK:

5.14.1 NO WEIGHT TEST IS REQUIRED FOR THE SNORKEL LIFTING BLOCKS (PC'S 317 AND 318). VISUALLY INSPECT THE LIFTING BLOCKS PRIOR TO USAGE. THE LIFTING BLOCKS SHOULD BE STRAIGHT. NO BEND IS ALLOWED.

~~5.14.1 LIFTING BLOCKS (PC 317 AND 318):~~

~~5.14.1.1 TENSION TEST:~~

~~A. BOLT LIFTING BLOCKS TOGETHER AS SHOWN IN FIGURE 14.~~

~~B. APPLY 27,000 POUND TENSION ON LIFTING BLOCK PADEYES FOR TEN MINUTES.~~

~~C. INSPECT LIFTING BLOCKS VISUALLY, NO DEFORMATION OR TEAR ALLOWED.~~

~~5.14.2. WEIGHT TEST:~~

~~A. BOLT LIFTING BLOCKS WITH TEST BLOCK (PC322) AND SUPPORT PLATE (PC323) TOGETHER AS SHOWN IN FIGURE 15. NOTE SPECIAL WASHERS (PC321) SHOULD BE INSTALLED BETWEEN SUPPORT PLATES AND LIFTING BLOCKS.~~

~~B. APPLY 100,000 AND 50,000 POUND COMPRESSION ON TEST BLOCK AND LIFTING BLOCKS FOR TEN MINUTES, RESPECTIVELY.~~

~~C. INSPECT LIFTING BLOCKS VISUALLY. NO DEFORMATION OR TEAR ALLOWED.~~

~~5.14.2 SUPPORT LEG (PC'S 310 AND 311):~~

~~A. SUPPORT LEGS ASSEMBLE AS SHOWN IN FIGURE 16 USING END TEST CAPS (PC 313 AND 314), BOLTS (PC 315), AND NUTS (PC 316). PC 313 TO BE ORIENTED SO THE PROJECTION ON ONE END IS VISIBLE IN THE OVAL SLOT. BOLT TOGETHER WITH PC 315 AND 316 IN THE HOLES INDICATED IN FIGURE 16.~~

~~WARNING~~

~~NONDESTRUCTIVE TEST ON ALL LIFTING EQUIPMENT WELDING BEFORE AND AFTER THE WEIGHT TEST IAW GENERAL NOTE 6. NO DEFECT IS ALLOWED.~~

~~A. THE LOADING WILL BE ECCENTRIC SO CAUTION MUST BE USED TO PREVENT THE ASSEMBLY FROM SLIPPAGE SIDE WAYS DURING WEIGHT TEST.~~

~~B. APPLY 100,000 POUND COMPRESSION ON END TEST CAPS FOR TEN MINUTES.~~

~~C. INSPECT SUPPORT LEGS VISUALLY. NO DEFORMATION OR TEAR ALLOWED.~~

5.15 WEIGHT TEST FOR BPS-16 LIFTING DEVICE (ASSEMBLY 391).

5.15.1 FASTEN TWO LIFTING DEVICES TOGETHER AND ATTACH SHACKLES TO THE LIFTING LUGS.

5.15.2 ARRANGE LIFTING SLINGS, DYNAMOMETER AND FASTENED DEVICES AS SHOWN IN FIGURE 18. DEVIATION FROM THIS TEST ARRANGEMENT IS PERMITTED TO ALLOW FOR DIFFERENCES AT TEST FACILITIES. FINAL APPROVAL OF THE TEST ARRANGEMENT WILL BE LEFT TO LOCAL AUTHORITY.

5.15.3 THE LOAD SHALL BE HELD FOR AT LEAST TEN (10) MINUTES.

5.15.4 AFTER THE WEIGHT TEST, THE CLAMP SHALL BE VISUALLY INSPECTED FOR BUCKLING AND FRACTURE. NO BUCKLING OR FRACTURE IS ALLOWED.

WARNING

NONDESTRUCTIVE TEST ON ALL LIFTING EQUIPMENT WELDING BEFORE AND AFTER THE WEIGHT TEST IAW GENERAL NOTE 6. ~~NO DEFECT IS ALLOWED.~~

5.16 WEIGHT TEST FOR ~~PERISCOPE~~ T-BAR (ASSY'S 161 AND 337)

WARNING

NONDESTRUCTIVE TEST ON ALL LIFTING EQUIPMENT WELDING BEFORE AND AFTER THE WEIGHT TEST IAW GENERAL NOTE 6. ~~NO DEFECT IS ALLOWED.~~

5.16.1 TEST THE T-BAR WITH A TOTAL LOAD OF 8,000 LBS ATTACHED TO THE BOTTOM LIFTING HOLES. 4,000 LBS IS ON THE FORWARD LIFTING HOLE AND 2,000 LBS EACH IS ON THE AFTER LIFTING HOLE. (SEE FIGURE 20).

5.16.2 LIFT THE T-BAR ASSEMBLY AND HOLD FOR TEN (10) MINUTES.

5.16.3 AFTER THE WEIGHT TEST, THE T-BAR SHALL BE VISUALLY INSPECTED FOR BUCKLING AND FRACTURE. NO BUCKLING OR FRACTURE IS ALLOWED.

5.17 WEIGHT TEST FOR ITEMS 329 & 349:

5.17.1 NO WEIGHT TEST IS REQUIRED, VISUALLY INSPECT THE RIG PRIOR TO USAGE.

~~5.18 WEIGHT TEST FOR SEAWOLF SNORKEL LIFTING CLAMP (ASSY 334):~~

~~5.18.1 USE STEP 5.1 WITH THE SETUP ON FIGURE 12.~~

~~NOTE~~

~~NO RECERTIFICATION REQUIRED UPON SUCCESSFUL COMPLETION OF TESTING.~~

5.19 WEIGHT TEST FOR 726 CLASS INNER INDUCTION MAST (PC 380):

5.19.1 NO WEIGHT TEST IS REQUIRED FOR THE SHROUD.
VISUALLY INSPECT THE SPREADER BAR PRIOR TO USAGE.

5.20 WEIGHT TEST FOR BPS-16 INNER MAST CLAMP (ASSY 357):

5.20.1 ENSURE THAT MANDREL, ITEM 408, IS CLEAN AND FREE FROM GREASE OR OTHER FOREIGN MATERIAL ON THE CLAMP SURFACE AND THAT THE CLAMP HALVES ARE A "MATCHED" SET PRIOR TO TESTING.

5.20.2 PLACE MANDREL, ITEM 408, ON FLAT STATIONARY SURFACE.

5.20.3 ATTACH MAST CLAMP, ITEM 357, TO MANDREL, ITEM 408, ALIGNING BOTTOM SURFACE OF CLAMP WITH THE SCRIBED LINE ON THE MANDREL.

5.20.4 SECURE CLAMP TO MANDREL BY TIGHTENING THE TEN (10) SOCKET HEAD CAP SCREWS AND TORQUE TO A VALUE OF 7 TO 8 FOOT-POUNDS. TORQUE SCREWS DIAGONALLY. VISUALLY INSPECT GAP ON MAST CLAMP ASSY, ITEM 357, AND CONFIRM GAP IS EQUAL ON BOTH SIDES. WAIT 10 MINUTES AND RECHECK TORQUE.

5.20.5 SLIDE PUSH RING, ITEM 399, ONTO MANDREL UNTIL RESTING FLUSH ON THE TOP SURFACE OF THE CLAMP. ENSURE PUSH RING, ITEM 409, IS SEATED PROPERLY ON THE MAST CLAMP, ITEM 357.

5.20.6 APPLY A VERTICAL LOAD OF 2000 LBS TO PUSH RING, ITEM 409, AND HOLD FOR TEN MINUTES.

5.20.7 DURING TEST, OBSERVE THE RELATIONSHIP BETWEEN THE BOTTOM EDGE OF THE CLAMP TO THE SCRIBED LINE ON THE MANDREL.

5.20.8 NO SLIPPAGE IS ALLOWED. IF SLIPPAGE OCCURS, REMOVE CLAMP FROM MANDREL AND REINSPECT MANDREL SURFACE FOR FOREIGN MATERIAL AND REPEAT TEST.

6. HOLDING CAPACITY TEST:

WARNING

NONDESTRUCTIVE TEST ON ALL LIFTING EQUIPMENT WELDING BEFORE AND AFTER THE WEIGHT TEST IAW GENERAL NOTE 6. NO DEFECT IS ALLOWED.

6.1. INSTALL THE LIFTING CLAMP ON THE FAIRING SECTION OR MANDREL AS SHOWN IN FIGURES 8, 9 AND 19, RESPECTIVELY. DEVIATION FROM THE TEST ARRANGEMENTS IS PERMITTED TO ALLOW FOR DIFFERENCES AT CLAMP TESTING FACILITIES. FINAL APPROVAL OF THE TEST ARRANGEMENT WILL BE LEFT TO LOCAL AUTHORITY.

NOTE

INSPECT THE CLAMP AND BOLTS WITH THEIR NUTS AND WASHERS. THE MAST AND THE MAST CONTACT AREAS MUST BE CLEAN OF ALL DIRT, GREASE, OIL, OR OTHER CONTAMINANTS. BRD-7 AN/BLD-1 CLAMPS SHOULD BE ARRANGED IAW FIG. 12.

NOTE

FOR PERISCOPE LIFTING CLAMP, REPLACE PC'S 325 AND 329 WITH PC'S 47 AND 349 IN FIG 19, RESPECTIVELY.

6.2. TORQUE THE HOLDDOWN BOLTS SEQUENTIALLY AND IN UNIFORM INCREMENTS UNTIL THE PROPER TORQUE VALUE AS GIVEN IN SHEET 63, TABLE 2 HAS BEEN ATTAINED ON EACH BOLT.

6.3. ATTACH LIFTING SLINGS TO THE CLAMP, TEST FIXTURES, CRANE, HOIST, TEST WEIGHT AND DYNAMOMETER AS SHOWN IN FIGURES 8 AND 9.

6.4. LIFT THE TEST CLAMP UNTIL THE DYNAMOMETER READING IS AS SHOWN IN TABLE 1.

6.5. HOLD FOR TEN (10) MINUTES.

NOTE

THE TESTED CLAMP SHALL BE USED TO DETECT ANY CLAMP SLIPPAGE. NO CLAMP SLIPPAGE IS PERMITTED ONCE THE MAXIMUM TEST LOAD IS REACHED.

NOTE

USE THE TESTED CLAMP TO DETECT ANY CLAMP SLIPPAGE.

TABLE 1

LIFTING CLAMP ASSY NO.	NOMENCLATURE OR USE DESIGNATION	WEIGHT (LBS)	REMARKS
(2)	~~VLF (26 INCH MAJOR CHORD)~~ PERISCOPE, ~~BRN 3,~~ ~~BRQ 19,~~ ~~BRA 9, 15, 19, 21, 34,~~ BRD-7, OE-207/BR, ~~OE 158/BQR,~~ OE-538, ~~UHF/IFF,~~ ~~IDFS/BRD 7,~~ OE-592 AND NAVSAT	8,000	FIGURE 1
(4)	~~AN/BQR 19 AND~~ AN/BRD-7 INNER MAST	2,000	FIGURE 2
(6)	~~AN/BRA 34,~~ OE-207/BR, OE-538 AND OE-592 ANTENNAS	2,000	FIGURE 2
(47)	PERISCOPE 7-1/2 INCH DIA LIFTING CLAMP	6,000	FIGURE 2

TEST PROCEDURE FOR WEIGHT HANDLING EQUIPMENT & TEST WEIGHT REQUIREMENT	SIZE	CAGE NO.	WT GRP	NAVSEA DRAWING NO.	REV
	B	53711	904	4398614	V
	SCALE - NONE			SHEET 62	

~~(48)~~	~~SNORKEL MAST LIFTING CLAMP (SSN 637 SHORT HULL)~~	~~6,000~~	~~FIGURE 1~~
~~(49)~~	~~ESM LIFTING CLAMP~~	~~12,000~~	~~FIGURE 1~~
~~(50)~~	~~7-1/2" DIA RADAR ANTENNA LIFTING CLAMP~~	~~4,000~~	~~FIGURE 2~~
(51)	3" DIA RADAR LIFTING CLAMP	3,000	FIGURE 2
~~(52)~~	~~SNORKEL MAST LIFTING CLAMP (SSN 688 CLASS)~~	~~12,000~~	~~FIGURE 1~~
(55)	AN/BRD-7 LIFTING RIG	1,000	FIGURE 17
~~(77)~~	~~AS 2591/BLA 4 LIFTING SLING~~	~~2,000~~	
~~(81)~~	~~BUOY LIFTING SLINGS AN/BRA 8C AND AN/BRA 7B~~	~~5,500~~	~~FIGURE 5~~
~~(93)~~	~~SNORKEL MAST LIFTING CLAMP (SSN 637 LONG HULL)~~	~~6,000~~	~~FIGURE 1~~
(161) (180) (185) (192)	BUOY LIFTING ASSEMBLY BRR-6/OE-305	5,500	FIGURE 5
(201)	SNORKEL LIFTING CLAMP SSBN 726 CLASS	19,200	FIGURE 1
~~(202)~~	~~SNORKEL LIFTING CLAMP SSBN 608, 616, 627, AND 640 CLASSES~~	~~20,000~~	~~FIGURE 7~~
(280)	HINGE CARRIAGE FOR PERISCOPE HANDLING ASSY	N/A	SEE REFERENCE (40)
(293)	E&E SUPPORT BARS FOR TYPE 8 AND 18 E&E ADAPTERS	~~N/A~~ SEE NOTE 5.7	FIGURES 10, 11
~~(291)~~	~~E&E ADAPTER SUPPORT BAR~~	~~3,000~~	~~FIGURE 21~~
(298)	2 7/8 DIAMETER HOIST CYLINDER	2,000	FIGURE 13
~~(309)~~	~~SNORKEL SUPPORT LEG (726 CLASS)~~	~~VAR~~	~~FIGURES 14, 15, 16~~
(325)	SNORKEL INNER INDUCTION PIPE ~~LIFTING~~ CLAMP (688 CLASS, 21 CLASS, 774 CLASS)	2,600	FIGURE~~S 2,~~ 19
(330)	RADAR LIFTING DEVICE	~~2,200~~ 4,100	FIGURE 18
(334)	SNORKEL LIFTING CLAMP (21 CLASS, 774 CLASS)	~~10,300~~ 13,100	FIGURE 1
~~(335)~~	~~PERISCOPE 8" DIA LIFTING CLAMP~~	~~4,000~~	~~FIGURE 1~~
~~(336)~~	~~SNORKEL INNER INDUCTION PIPE LIFTING CLAMP (SEAWOLF)~~	~~2,600~~	~~FIGURE 2~~
(337)	PERISCOPE T-BAR (SEAWOLF)	8,000	FIGURE 20
(338)	SNORKEL MAST LIFTING CLAMP (SSN 688 CLASS)	12,000	FIGURE 1
(348)	PERISCOPE LIFTING CLAMP (SEAWOLF)	8,000	FIGURE 1
(357)	BPS-16 RADAR MAST CLAMP	2,000	FIGURE 22
(370)	BPS-16 RADAR OUTER HOUSING LIFTING CLAMP	4,100	FIGURE 9
(377)	SNORKEL CYLINDER LIFTING DEVICE (688 CLASS)		SEE REFERENCE (56)
(381)	SNORKEL INNER INDUCTION PIPE ~~LIFTING~~ CLAMP (726 CLASS)	REF 57 FIG 2-9, SH 2	FIGURE 2
(382)	PERISCOPE FAIRING CYLINDER ~~PIPE~~ LIFTING DEVICE (688 CLASS)	VAR	SEE REFERENCE (58)
ASSY (1) REF (41)	AN/BRD-7, AN/BLD-1 LIFTING RIG	3,000	FIGURE 4
REF (43)	AN/BRD-7, AN/BLD-1 LIFTING CLAMP	4,000	FIGURE 12

TABLE 2

MAST ASSEMBLY	TORQUE VALUES
ESM CLAMPS	70 FT-LBS
~~ASSEMBLY NUMBER 48~~	~~70 FT-LBS~~
ASSEMBLY NUMBER 334	80 FT-LBS
~~ASSEMBLY NUMBER 93~~	~~70 FT-LBS~~
ASSEMBLY NUMBER 201	110 FT-LBS
~~ASSEMBLY NUMBER 202~~	~~60 FT-LBS~~
ASSEMBLY NUMBER 298, ~~370,~~ 377	20 FT-LBS
ASSEMBLY NUMBER 309	(SEE NOTE 33)
ASSEMBLY NUMBER 357	7-8 FT-LBS
ASSEMBLY NUMBER 382	5 FT-LBS
ALL OTHER CLAMPS	60 FT-LBS

TEST WEIGHT REQUIREMENT

SIZE	CAGE NO.	WT GRP	NAVSEA DRAWING NO.	REV
B	53711	904	4398614	V
SCALE - NONE			SHEET 63	

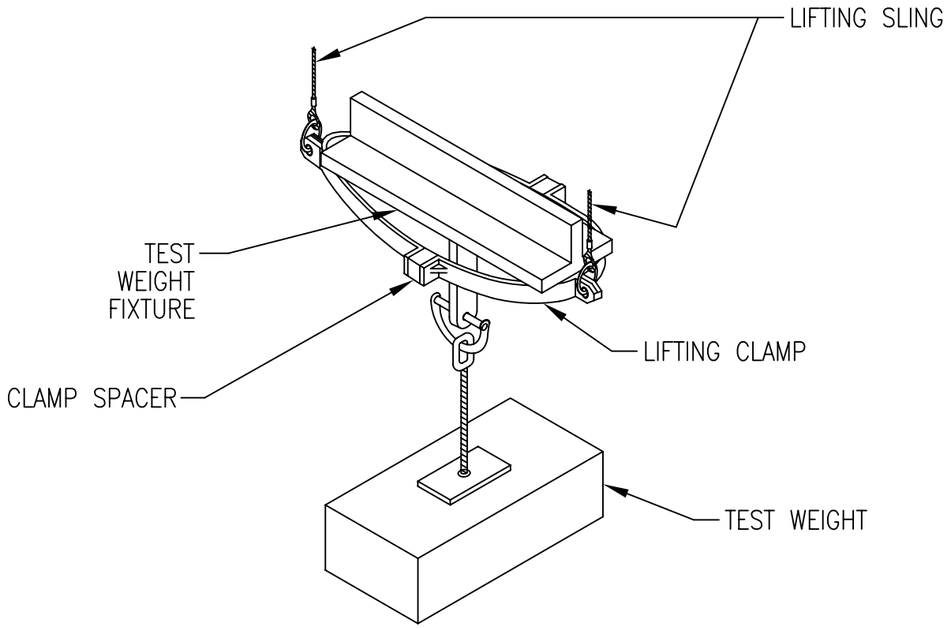

FIGURE 1

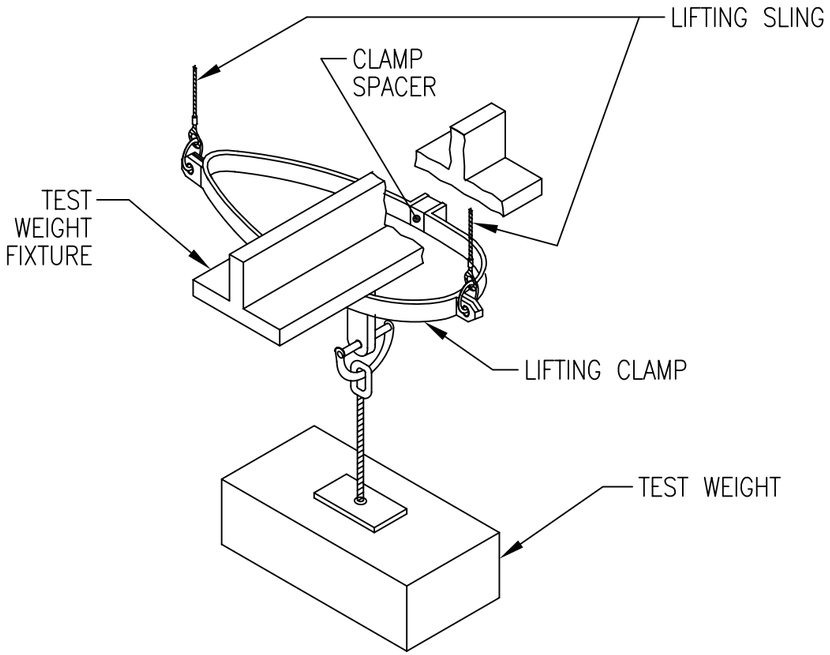

FIGURE 2

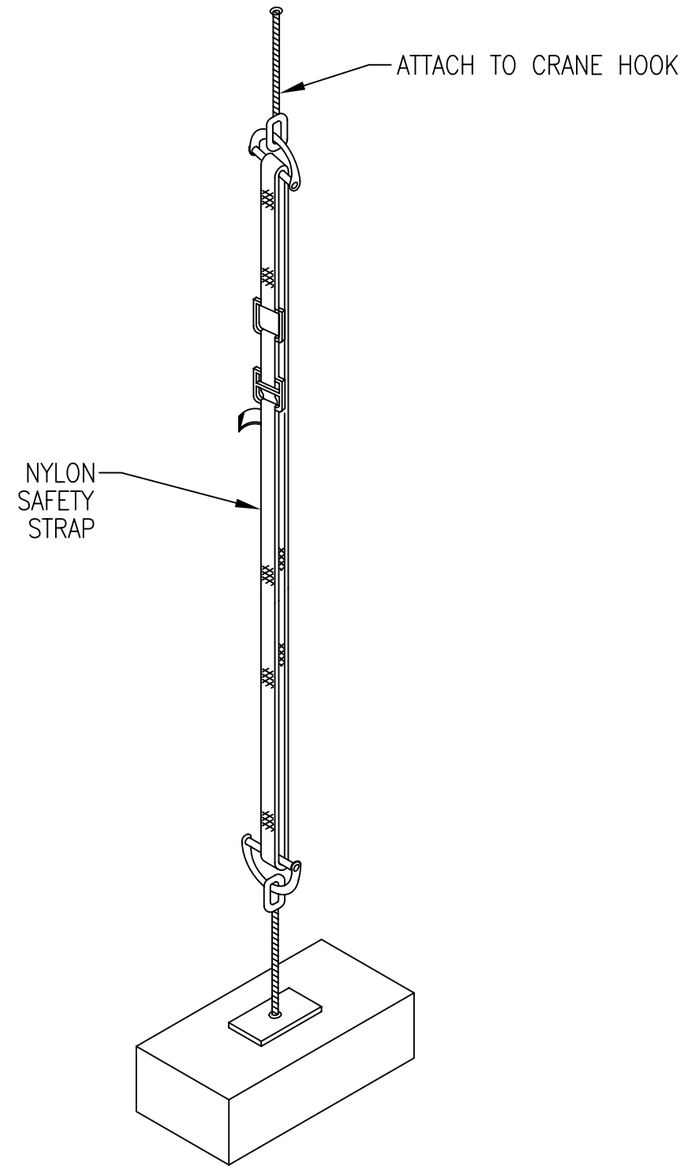

FIGURE 3

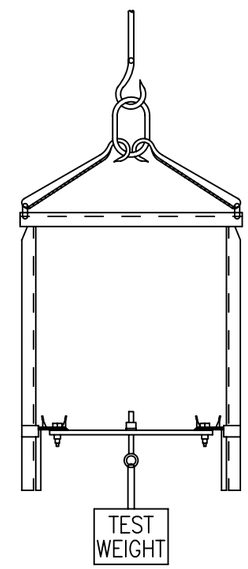

FIGURE 4

TEST SETUPS	SIZE	CAGE NO.	WT GRP	NAVSEA DRAWING NO.	REV
	B	53711	904	4398614	P
	SCALE – NONE			SHEET 64	

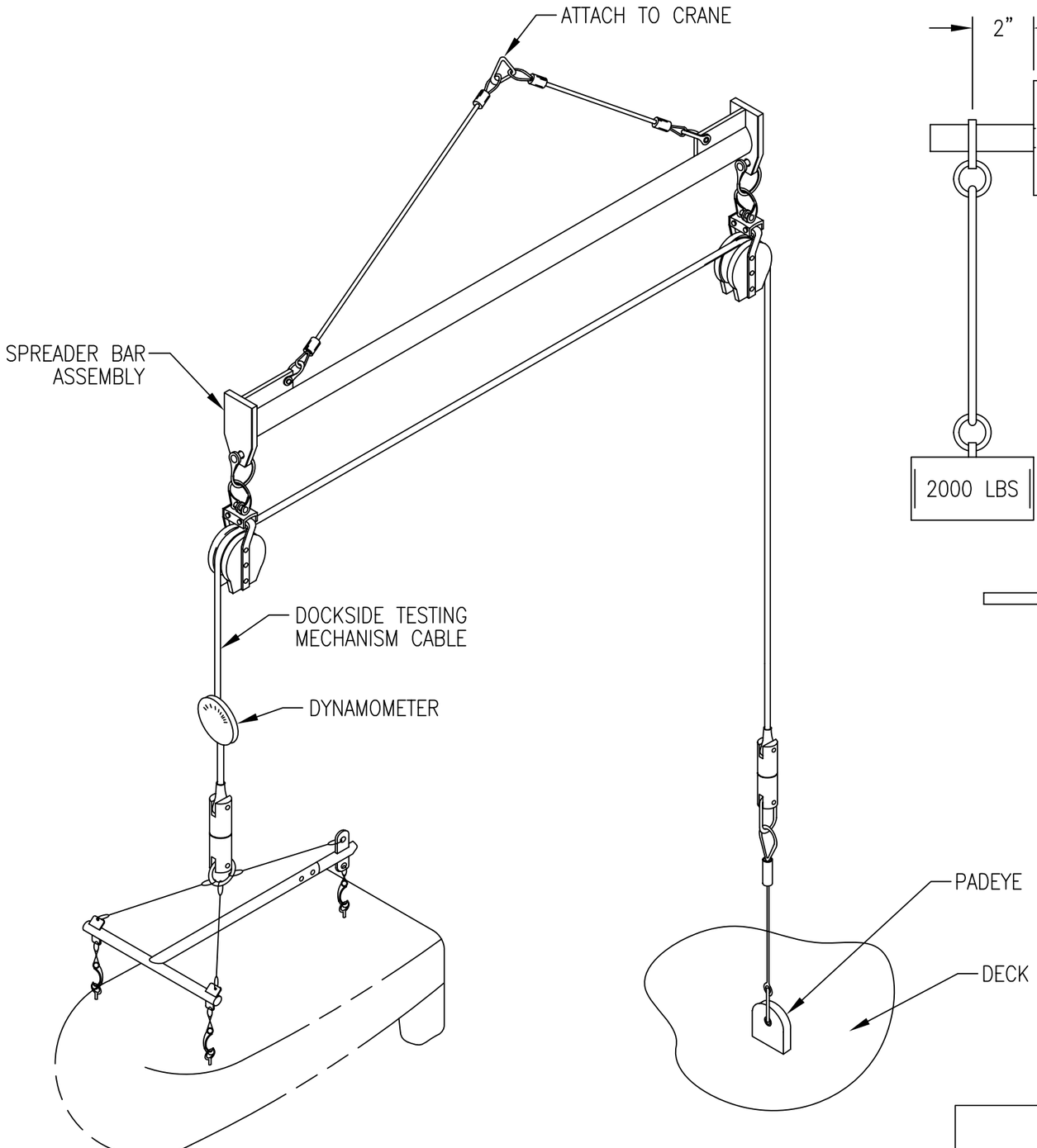

FIGURE 5

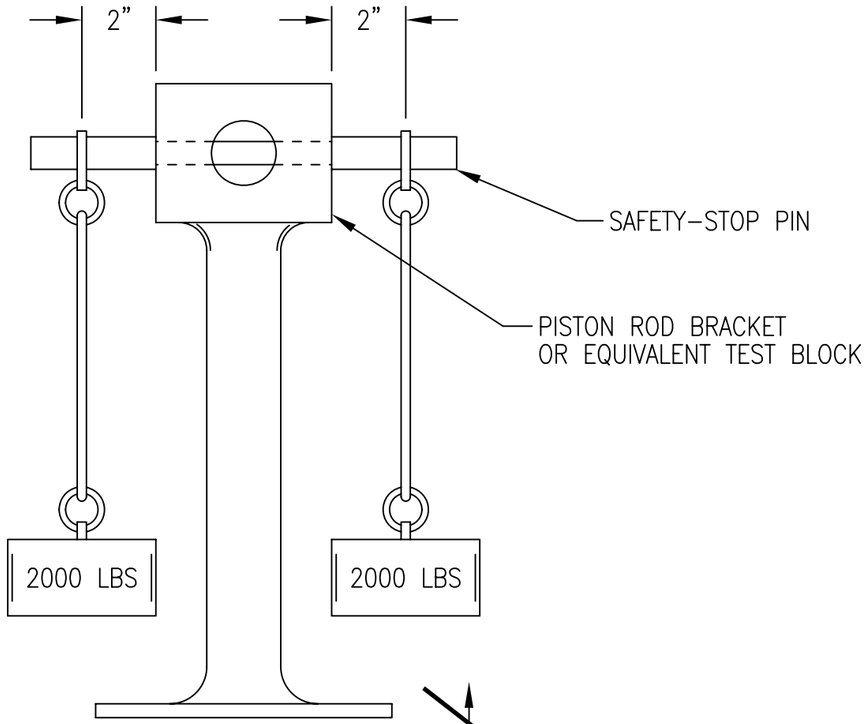

FIGURE 6

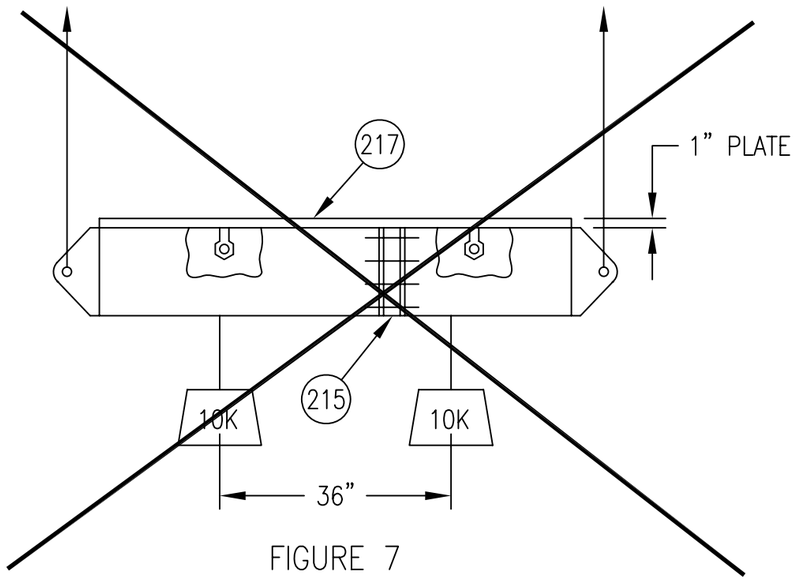

FIGURE 7
ASSY 202 LIFTING CLAMP TEST

TEST SETUPS	SIZE	CAGE NO.	WT GRP	NAVSEA DRAWING NO.	REV
	B	53711	904	4398614	S
	SCALE – NONE			SHEET 65	

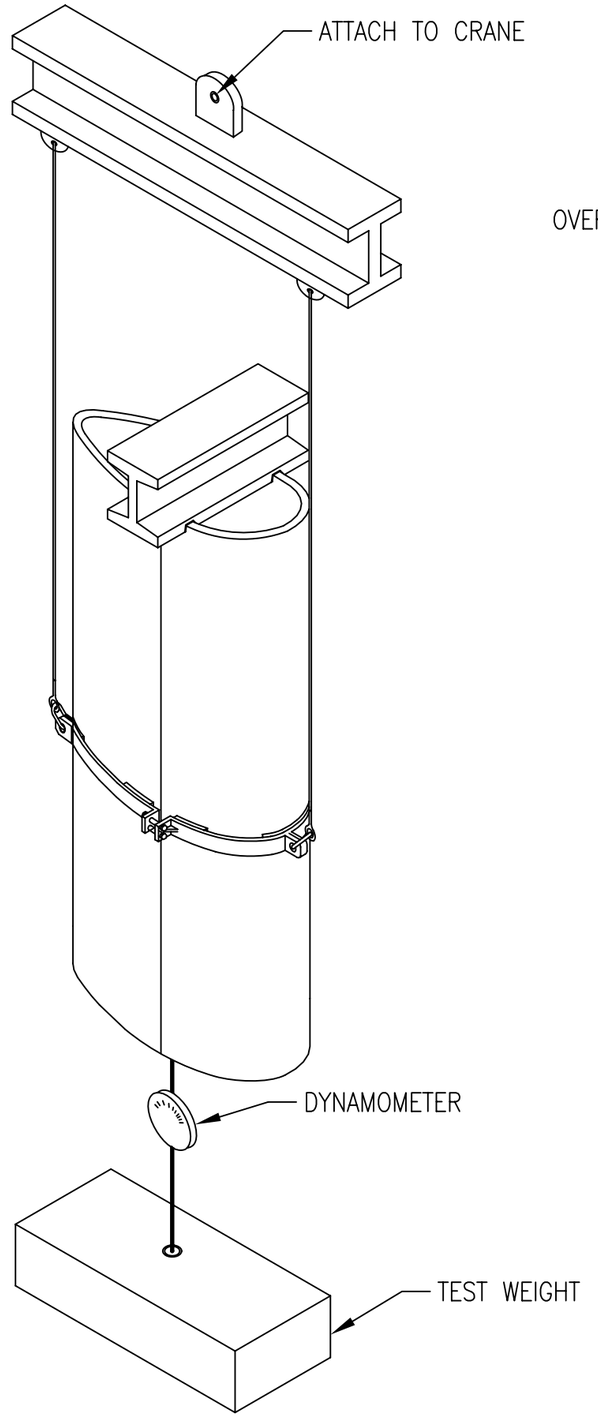

FIGURE 8

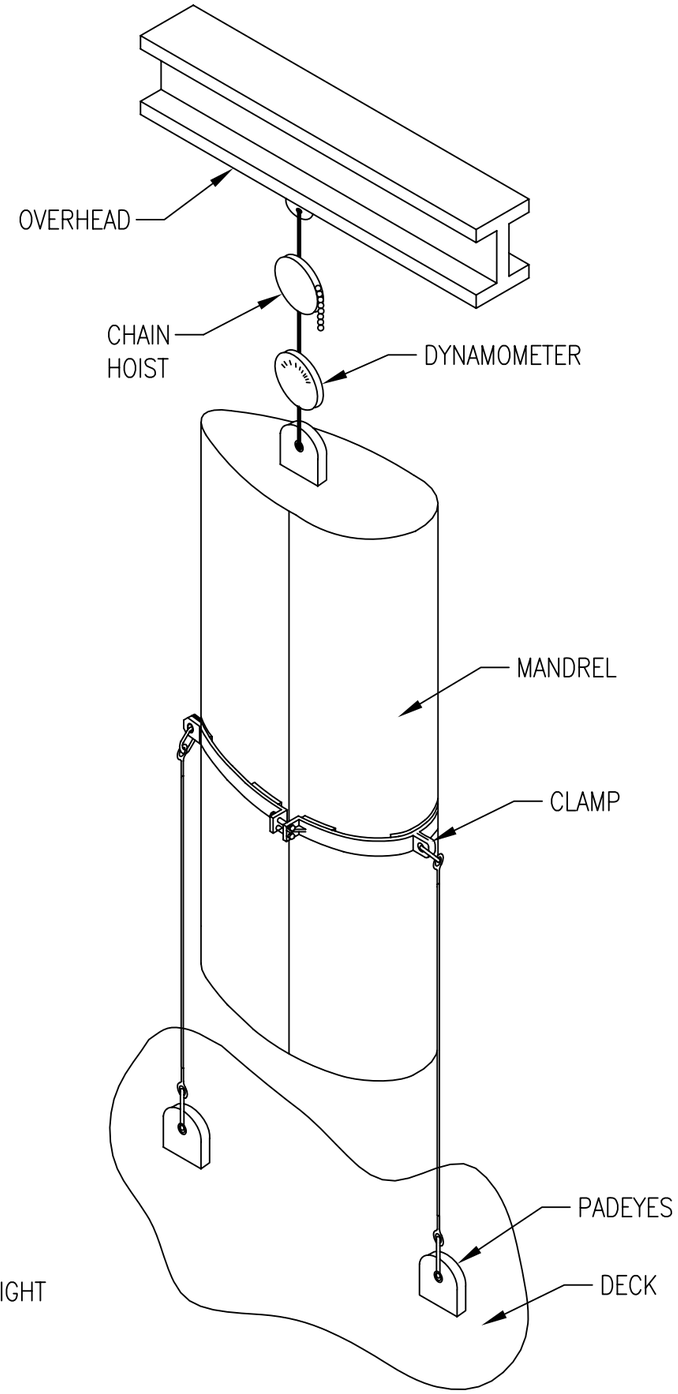

FIGURE 9

PC 1, EYEBOLT, 3/4"–10, MS51937–8 OR EQUIVALENT.
PC 2, HEX NUT, 3/4"–10, 90498A036 OR EQUIVALENT.

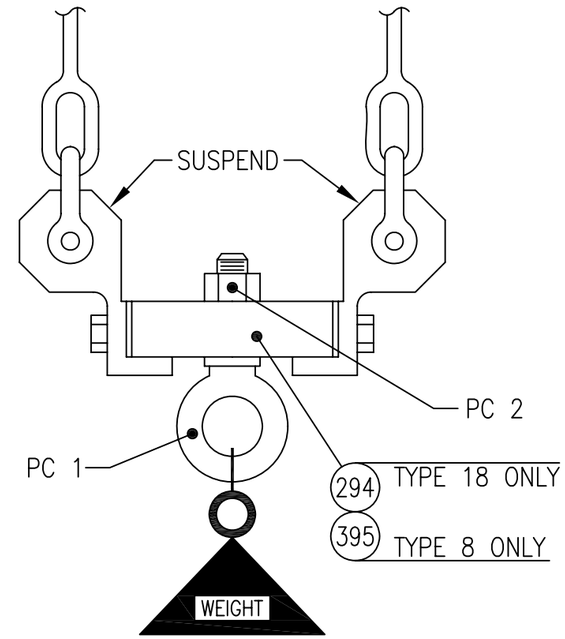

FIGURE 10

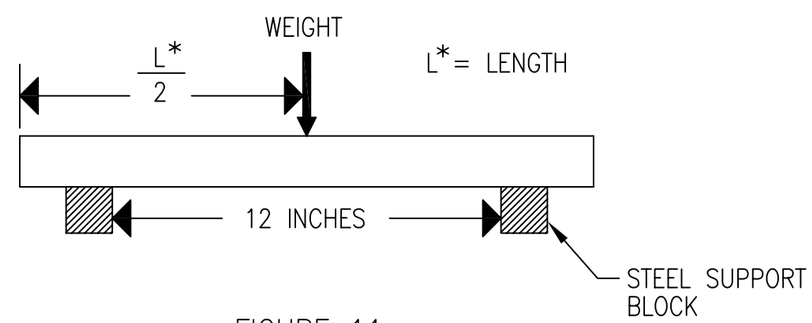

FIGURE 11

TEST SETUPS	SIZE	CAGE NO.	WT GRP	NAVSEA DRAWING NO.	REV
	B	53711	904	4398614	V
	SCALE – NONE			SHEET 66	

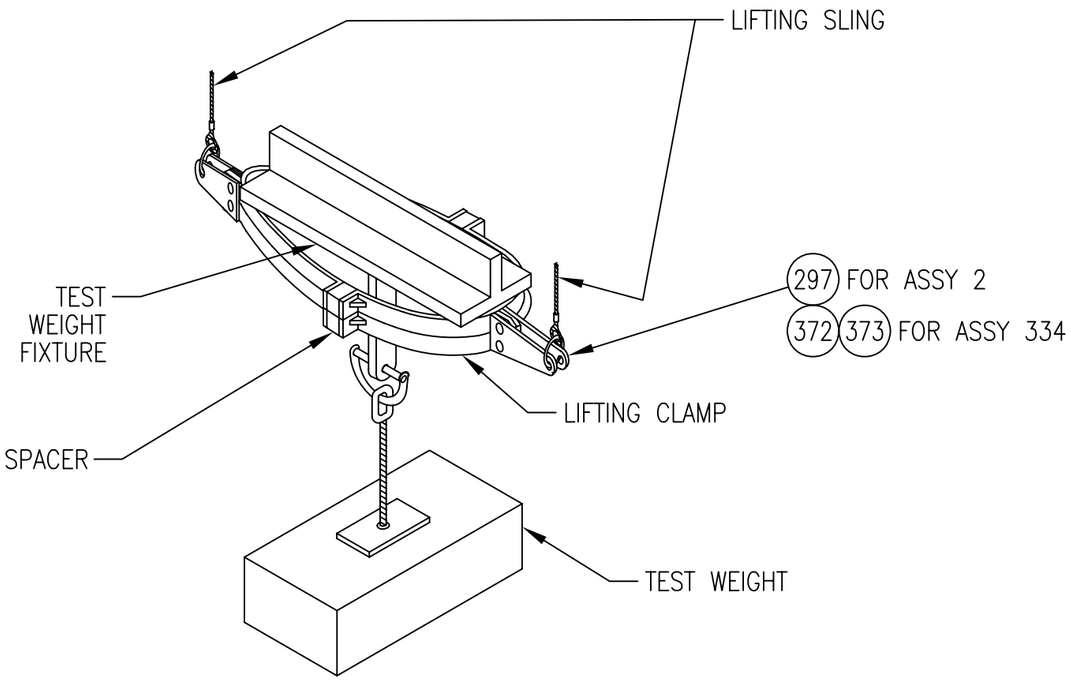

FIGURE 12

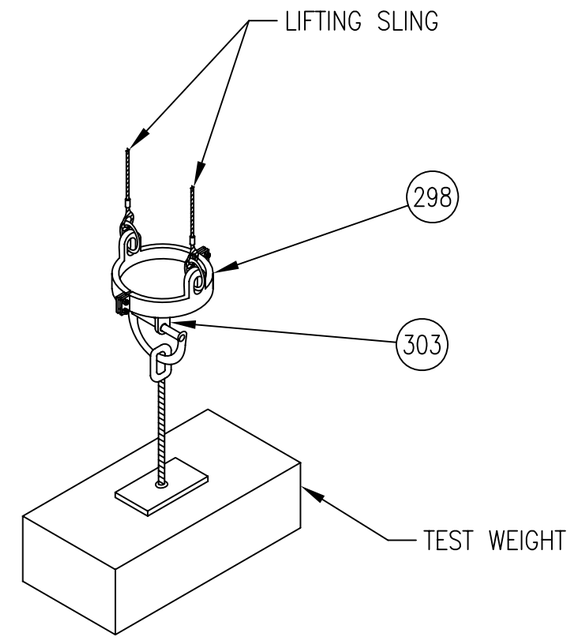

FIGURE 13

TEST SETUPS	SIZE	CAGE NO.	WT GRP	NAVSEA DRAWING NO.	REV
	B	53711	904	4398614	V
	SCALE – NONE			SHEET 67	

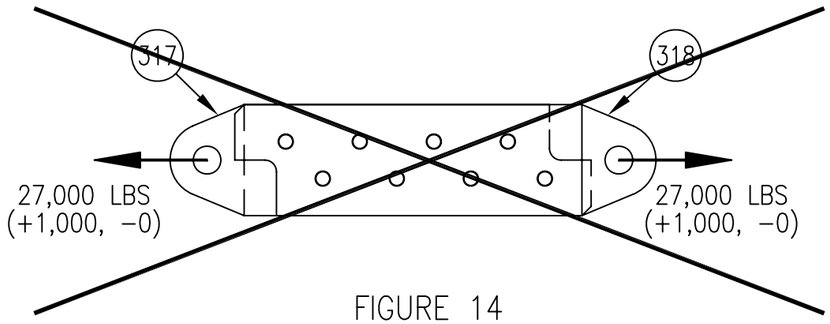

FIGURE 14

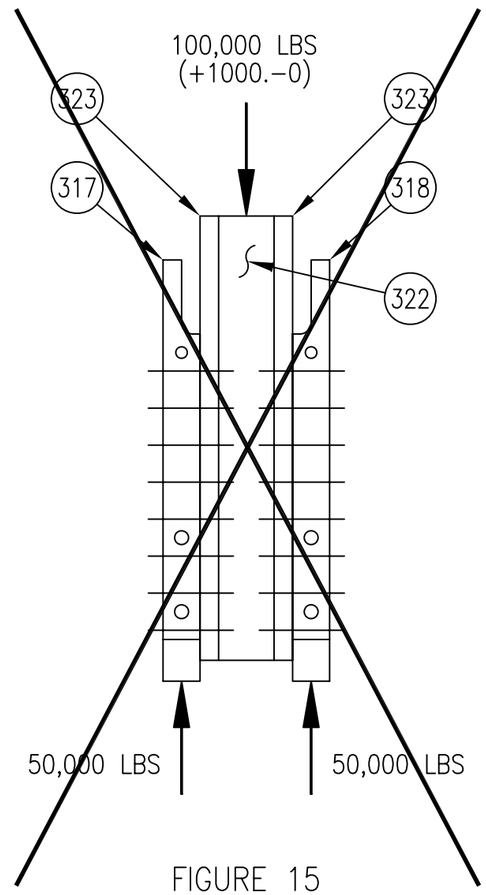

FIGURE 15

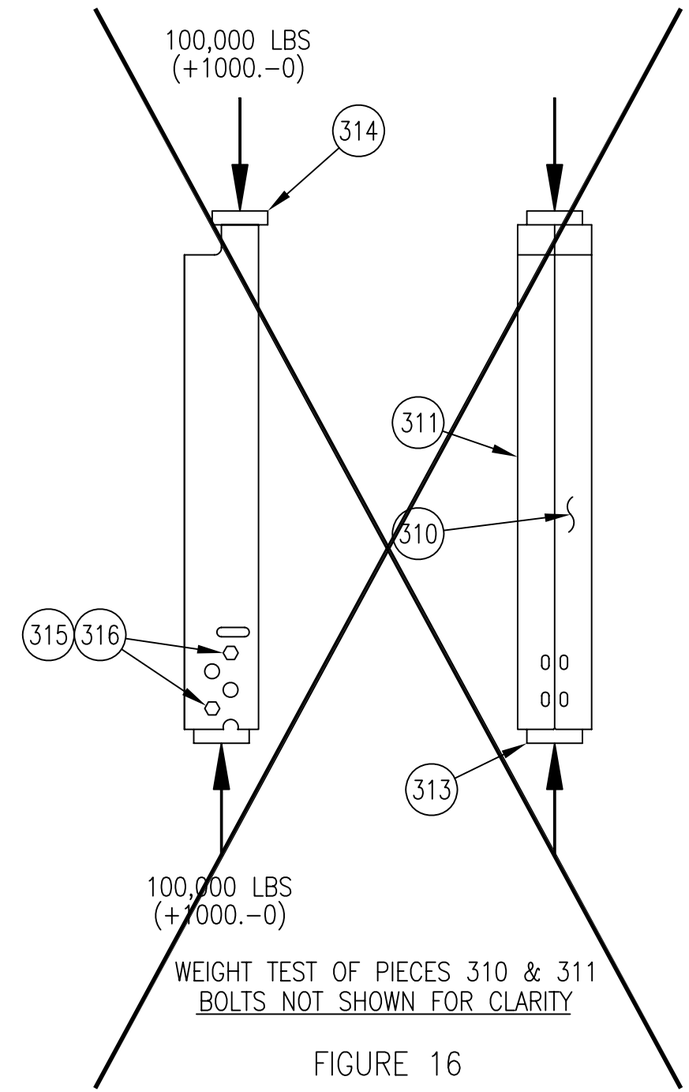

WEIGHT TEST OF PIECES 310 & 311
BOLTS NOT SHOWN FOR CLARITY

FIGURE 16

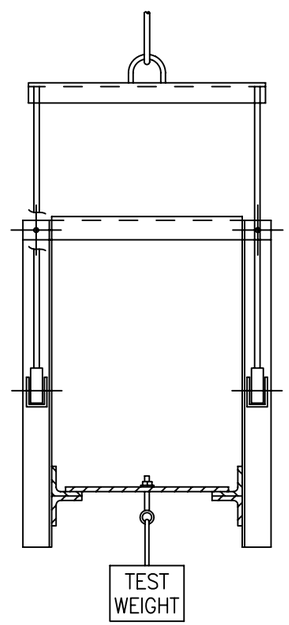

FIGURE 17

TEST SETUP	SIZE	CAGE NO.	WT GRP	NAVSEA DRAWING NO.	REV
	B	53711	904	4398614	T
	SCALE − NONE			SHEET 68	

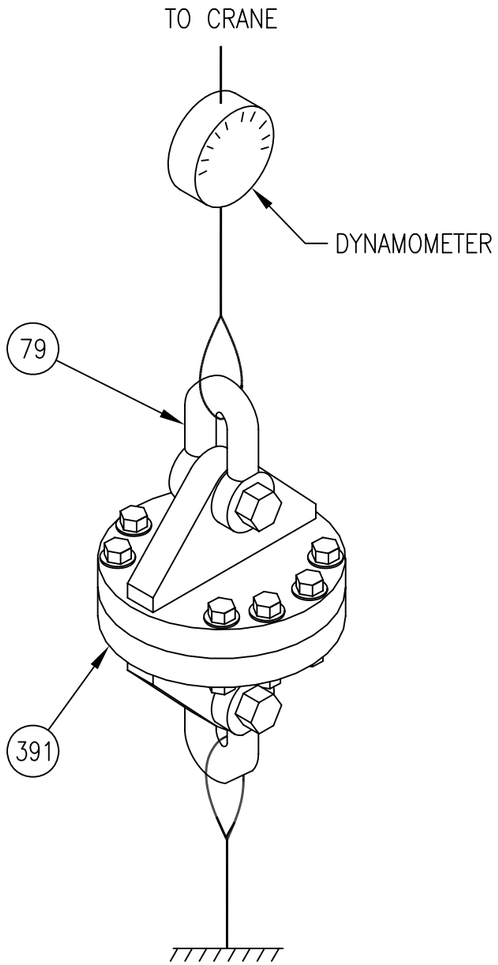

FIGURE 18

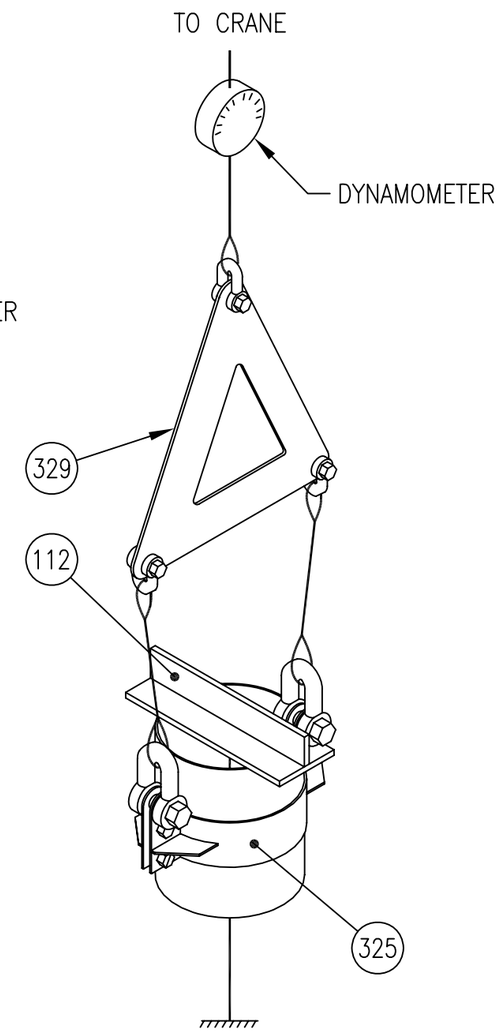

FIGURE 19

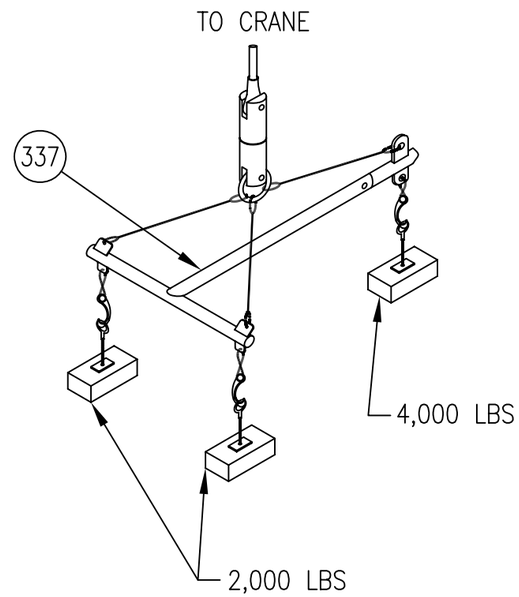

FIGURE 20

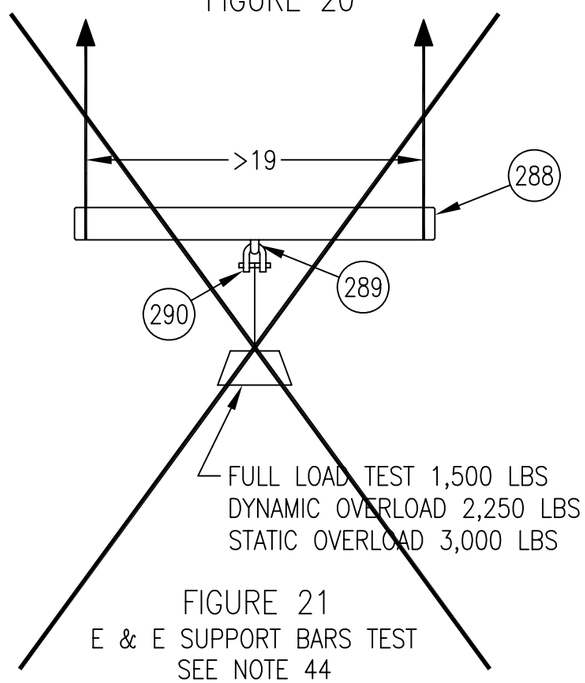

FIGURE 21
E & E SUPPORT BARS TEST
SEE NOTE 44

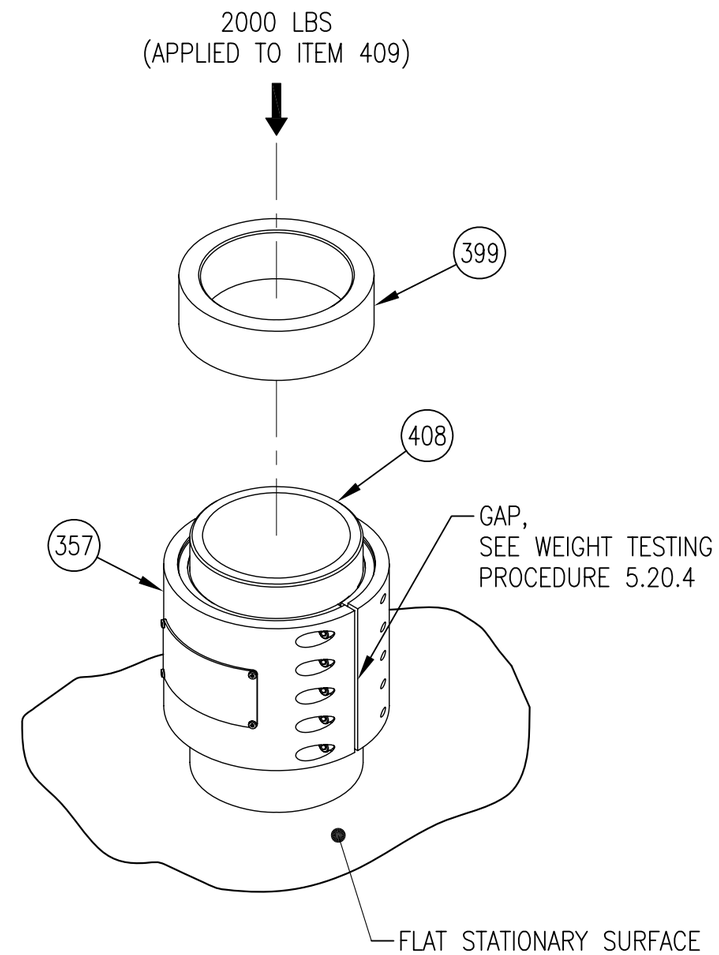

FIGURE 22

TEST SETUPS	SIZE	CAGE NO.	WT GRP	NAVSEA DRAWING NO.	REV
	B	53711	904	4398614	V
	SCALE – NONE			SHEET 69	

LIST OF PARTS FOR ONE ASSEMBLY (CONTINUED FROM SHEET 19)

REV	ITEM NO.	QTY REQD	DESCRIPTION	MATERIAL SPECIFICATIONS	MATERIAL REQUIRED	NSN OR MANUF PART NO.	REMARKS	ZONE
U	338	1	ASSEMBLY 338, LIFTING CLAMP	–	–	3940-01-474-3890	C/O 23, 25, 26, 62, 65, 339-347	E-21
R	339	1	CLAMP HALF, FWD 1/2 THK FB	MIL-S-22698	STEEL	–	TYPE 1, CL A ALTERNATE MATERIAL ASTM A36/A36M	A-71
R	340	1	CLAMP HALF, AFT 1/2 THK FB	MIL-S-22698	STEEL	–	TYPE 1, CL A ALTERNATE MATERIAL ASTM A36/A36M	A-71
R	341	2	LUG, LIFTING, 1/2 THK FB	MIL-S-22698	STEEL	–	TYPE 1, CL A ALTERNATE MATERIAL ASTM A36/A36M	A-71
R	342	4	GUSSET, 1/2 THK FB	MIL-S-22698	STEEL	–	TYPE 1, CL A ALTERNATE MATERIAL ASTM A36/A36M	A-71
R	343	4	GUSSET, 1/2 THK FB	MIL-S-22698	STEEL	–	TYPE 1, CL A ALTERNATE MATERIAL ASTM A36/A36M	A-71
U	344	1	BRAKE LINING, FWD 1/4 THK	COML	–	–	RAYMARK M9010-1, SEE NOTE 23	A-71
U	345	2	BRAKE LINING, MID 1/4 THK	COML	–	–	RAYMARK M9010-1, SEE NOTE 23	A-71
U	346	1	BRAKE LINING, AFT 1/4 THK	COML	–	–	RAYMARK M9010-1, SEE NOTE 23	A-71
V	347	6	BOLT, HEX HEAD, 5/8-11UNC-2A X 3-1/4 LG.	NASM 90725-169	STEEL	5306-01-308-7441	–	A-71
V	348	1	ASSEMBLY 348, LIFTING CLAMP	–	–	3940-01-537-6353	C/O PC'S 9, 10, 14, 15, 24-26, 2 OF 60, 4 OF 61, 62, 66, DIM & STMP IAW B-20 & NOTES 5, 19 & 21	B-20
R	349	1	LIFTING RIG, 1/2 THK PLATE	ASTM A36/A36M	STEEL	–	–	D-43
V	350	1	LABEL PLATE-.02 THK	COML	ALUMINUM	–	SEE NOTES 5, 19 & 21	D-44
~~T~~	~~351~~	~~1~~	~~LABEL PLATE .02 THK~~	~~COML~~	~~ALUMINUM~~			~~C-55~~
S	352	1	WASHER, FLAT 1.38 OD X .25 ID X .06	QQ-N-281	NI-CU	–	ANY GRADE	C-41
T	353	1	BALL SCREW END CAP	–	–	1859731	SEE NOTE 40	–
T	354	1	INSTALLATION GUIDE	–	–	1859727	SEE NOTE 40	–
T	355	1	ROTARY TUBE SUPPORT	–	–	1980537	SEE NOTE 40	–
T	356	1	ROTARY TUBE SUPPORT CLAMP	–	–	1859724-22	SEE NOTE 40	–
V	357	1	ASSEMBLY 357, INNER MAST SHIPPING & INSTALLATION CLAMP	–	–	–	C/O PC'S 400-406	A-82
T	358	1	BALL SCREW LOADING ARBOR	–	–	1980535	SEE NOTE 40	–
T	359	1	BALL SCREW SHORT SLEEVE COVER	–	–	1859732-1	SEE NOTE 40	–
T	360	1	BALL SCREW LONG SLEEVE COVER	–	–	1859732-3	SEE NOTE 40	–
T	361	1	BALL SLEEVE COVER	ASTM A108	STEEL	–	3" STEEL PIPE, SCHEDULE 40	D-74
T	362	1	STRONG BACK, 4 X 1-3/4 CHANNEL	ASTM A36	STEEL	–	–	B-74

CONTINUED ON SHEET 75

SIZE	CAGE NO.	WT GRP	NAVSEA DRAWING NO.	REV
B	53711	904	4398614	V
SCALE – NONE			SHEET 70	

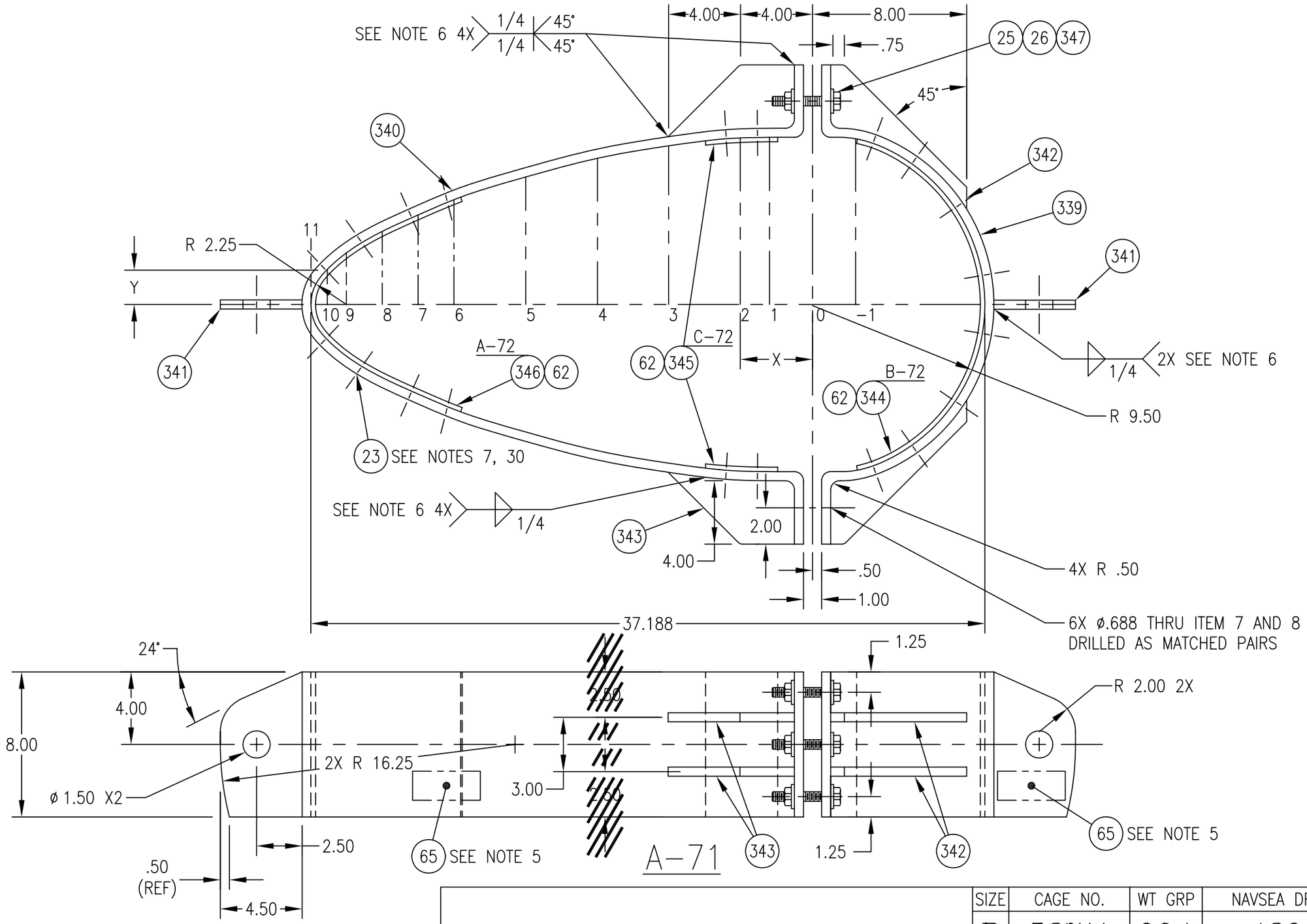

SNORKEL LIFTING CLAMP ASSY 338	SIZE	CAGE NO.	WT GRP	NAVSEA DRAWING NO.	REV
	B	53711	904	4398614	U
	SCALE: 3/16			SHEET 71	

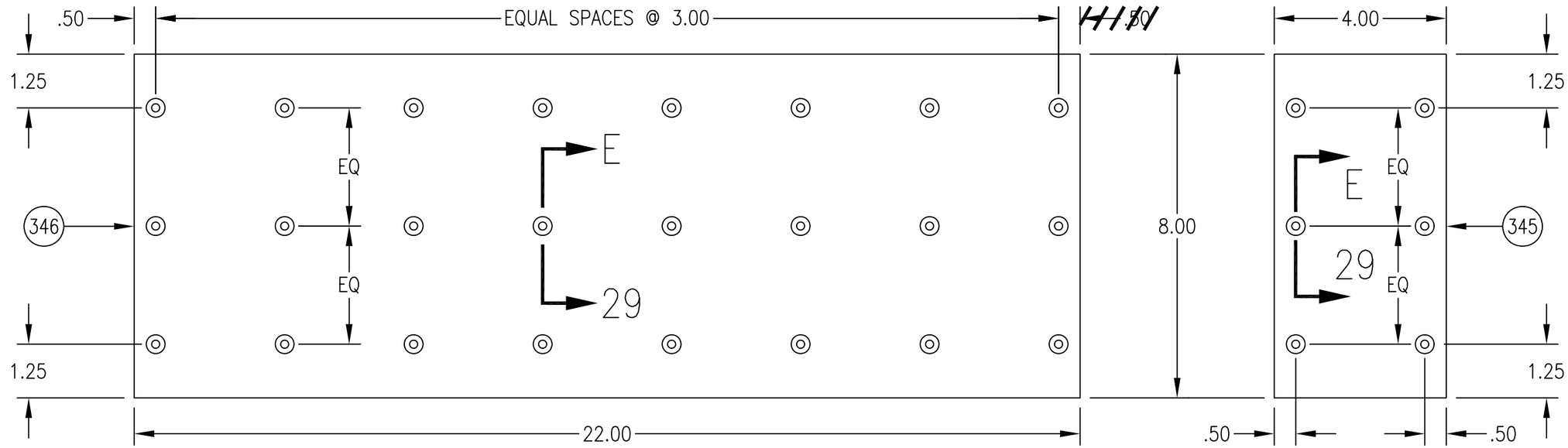

A–72
A–71

C–72
A–71

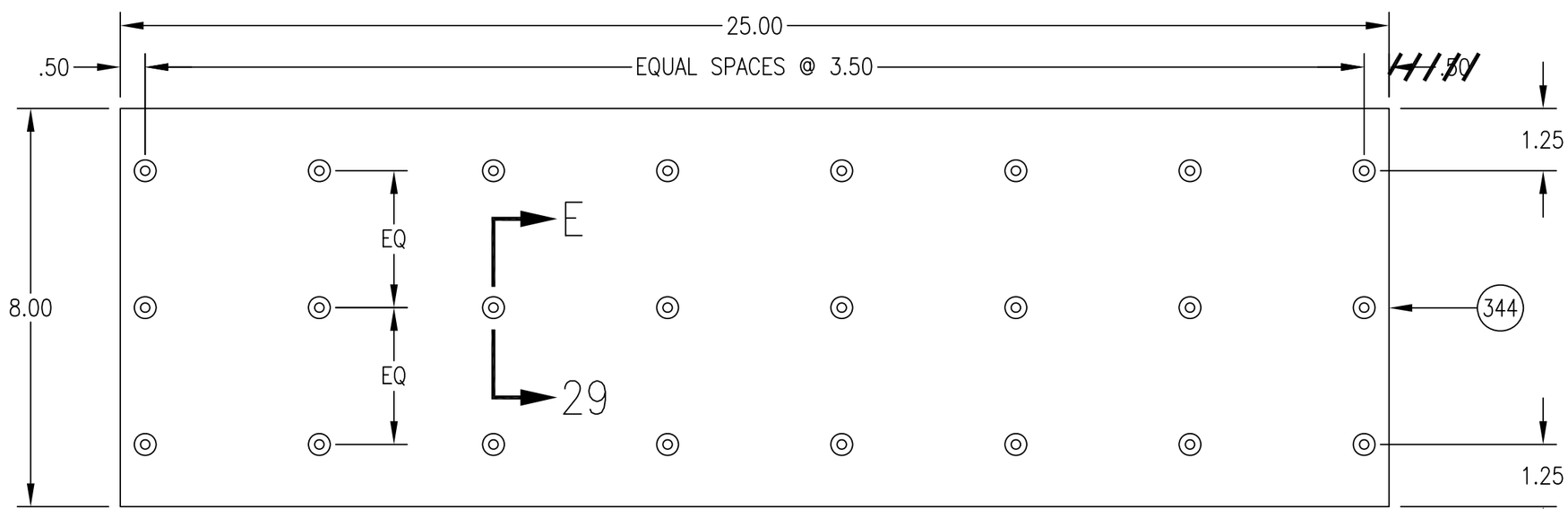

B–72
A–71

BRAKE LINING	SIZE	CAGE NO.	WT GRP	NAVSEA DRAWING NO.	REV
	B	53711	904	4398614	T
	SCALE: 3/8			SHEET 72	

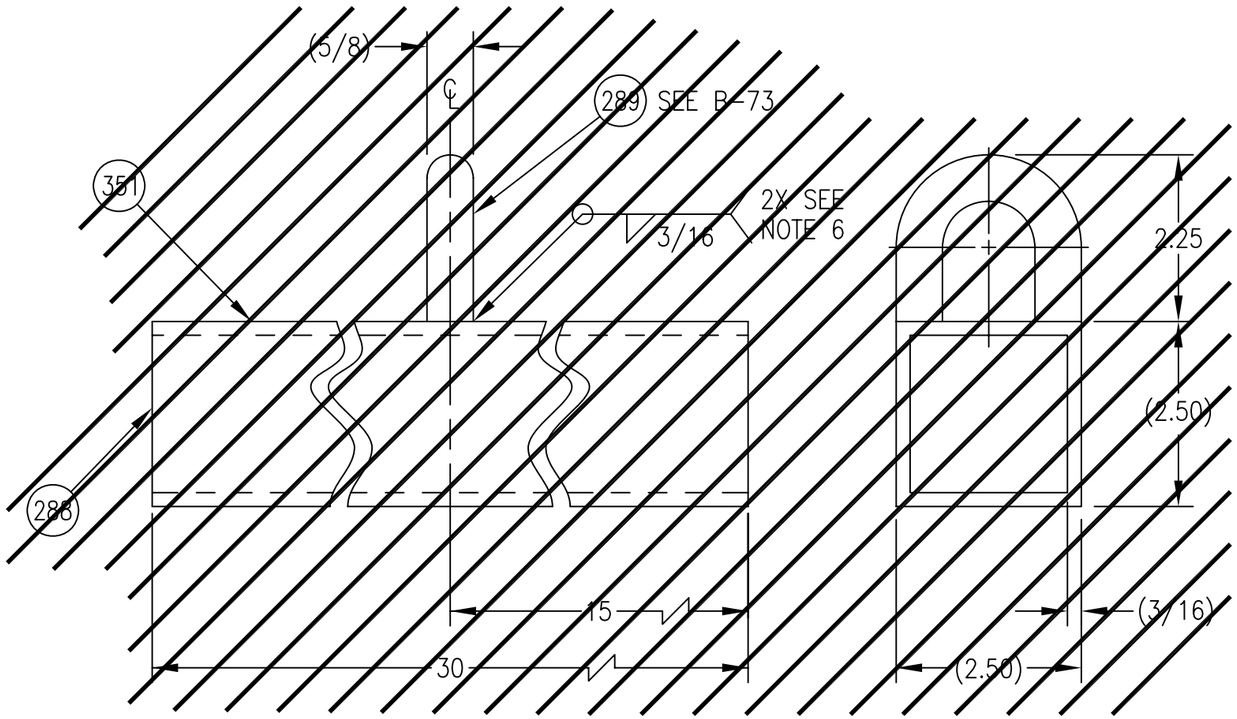

A-73

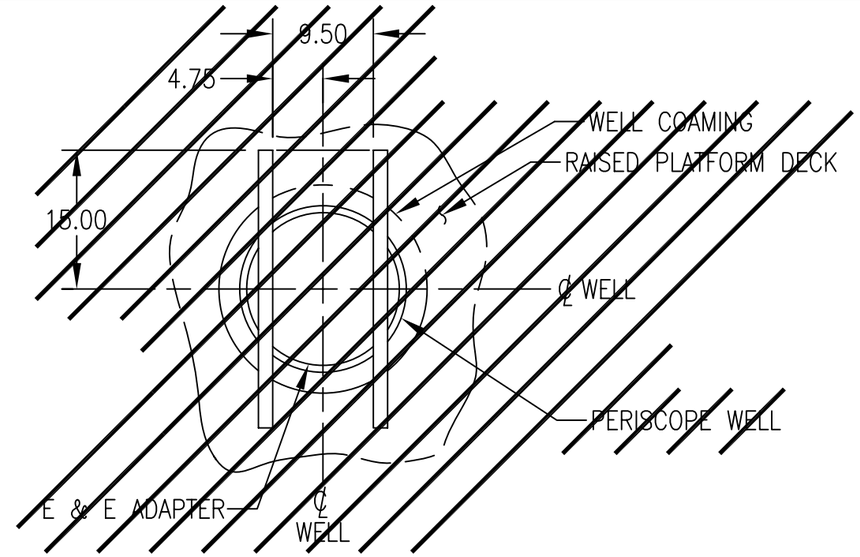

D-73

E-73

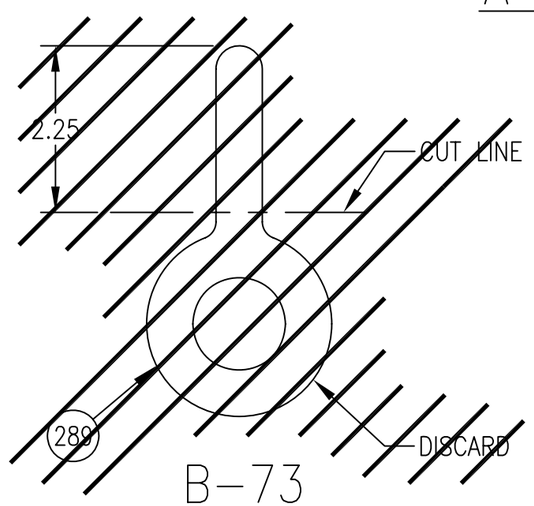

B-73

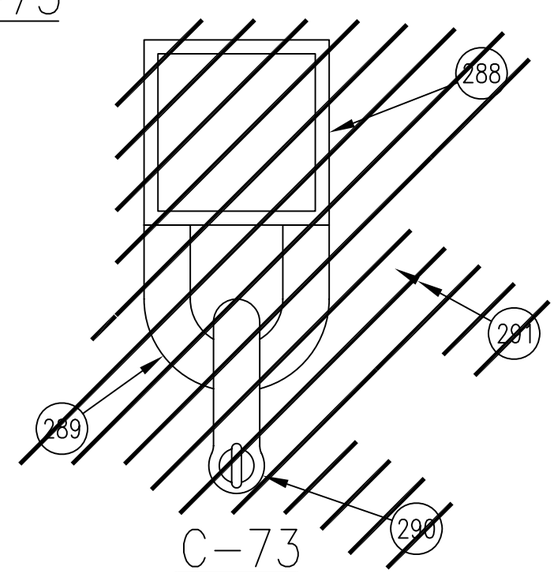

C-73

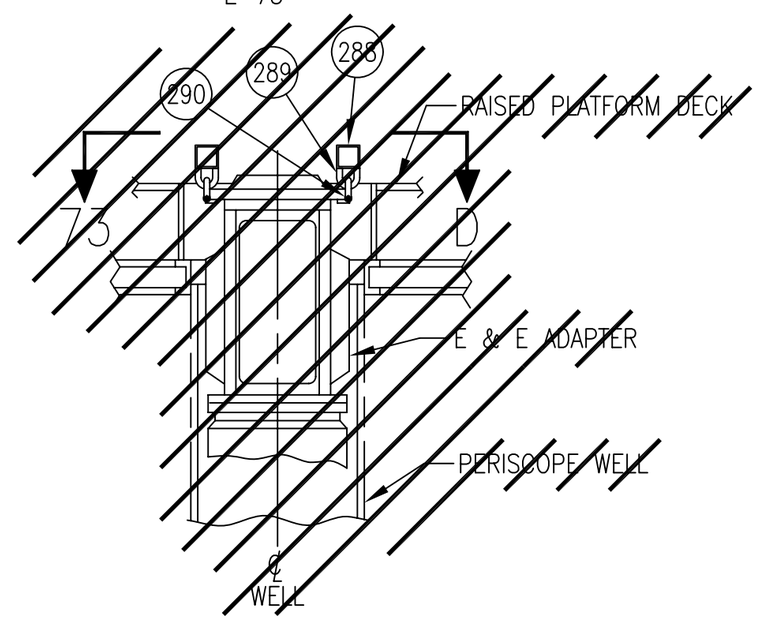

E-73

E & E ADAPTER BAR ARR

~~E & E SUPPORT BAR~~	SIZE	CAGE NO.	WT GRP	NAVSEA DRAWING NO.	REV
	B	53711	904	4398614	T
	SCALE - 1/4			SHEET 73	

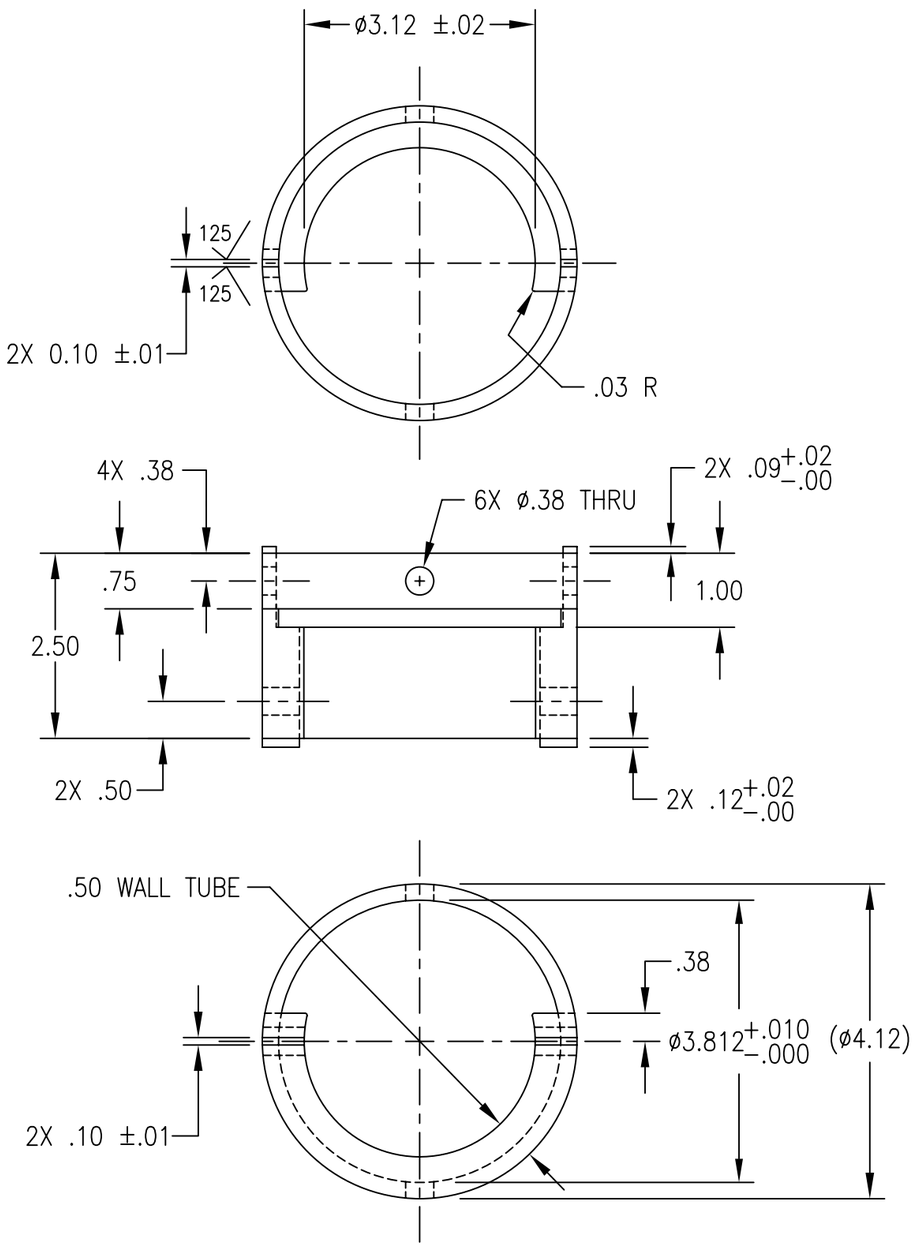

A–74
SCALE: 1/2 (365)

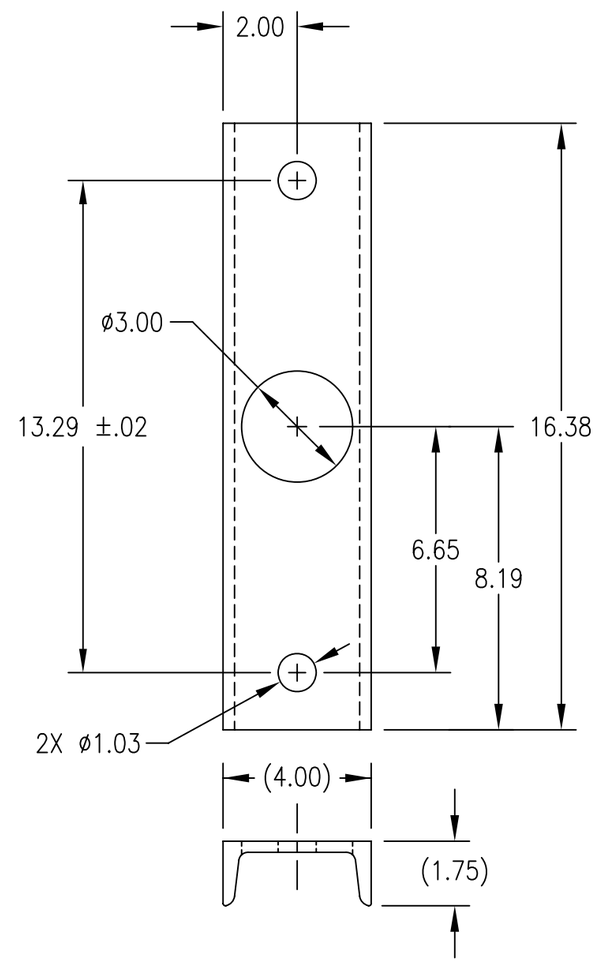

B–74
SCALE: 1/4 (362)

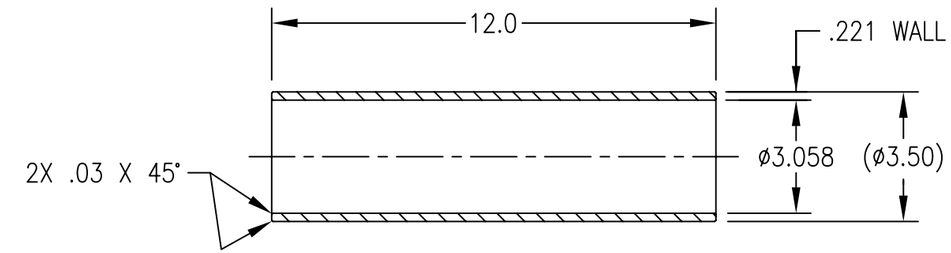

D–74
SCALE: 1/4 (361)

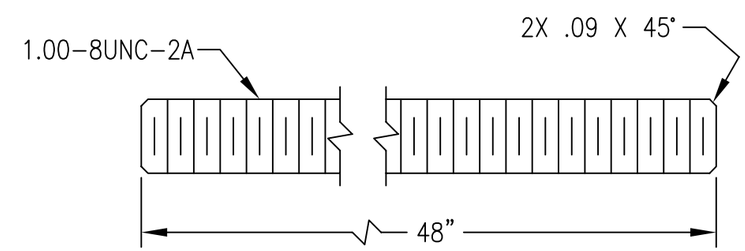

C–74
SCALE: 1/2 (363)

ASSY 330 – BPS–16 RADAR MAST FIXTURES
(CONTINUED FROM SHEET 56)

SIZE	CAGE NO.	WT GRP	NAVSEA DRAWING NO.	REV
B	53711	904	4398614	T
SCALE – AS NOTED			SHEET 74	

LIST OF PARTS FOR ONE ASSEMBLY (CONTINUED FROM SHEET 70)

REV	ITEM NO.	QTY REQD	DESCRIPTION	MATERIAL SPECIFICATIONS	MATERIAL REQUIRED	NSN OR MANUF PART NO.	REMARKS	ZONE
T	363	4	THREADED ROD, 1"-8UNC-2A	ASTM A108	STEEL	-	GRADE 1018 OR EQUAL	C-74
T	364	4	NUT, 1"-8UNC-2B	ASTM A108	STEEL	-	-	-
T	365	1	ROTARY JOINT DRIVE TOOL	ASTM A519	STEEL	-	GRADE 1018 OR EQUAL	A-74
T	366	-	-	-	-	-	-	-
T	367	-	-	-	-	-	-	-
T	368	-	-	-	-	-	-	-
T	369	-	-	-	-	-	-	-
V	370	1	BPS-16 RADAR LIFTING CLAMP	-	-	-	C/O PC'S 14, 23-26, 35, 36, 60, 62 & 65, SEE NOTES 5, 19, 21 & 37	~~B-25~~ F-21
U	371	1	SNORKEL LIFTING SUPPORT BRACKET	-	-	-	C/O PC'S 372-376, ~~SEE NOTES 41-43~~	D-34
T	372	2	SUPPORT BRACKET, .50 THK	MIL-S-22698	STEEL	-	TYPE 1, CL A ALTERNATE MATERIAL ASTM A36/A36M	D-34
T	373	2	SUPPORT BRACKET, .50 THK	MIL-S-22698	STEEL	-	TYPE 1, CL A ALTERNATE MATERIAL ASTM A36/A36M	D-34
T	374	4	BOLT, HEX, 1-3/8-6UNC-2A X 5.0 LG	NASM 90725-299	STEEL	-	-	D-34
T	375	4	NUT, HEX, 1-3/8-6UNC-2B	MS51967	STEEL	-	-	D-34
T	376	8	WASHER, FLAT	MS27183-31	STEEL	-	-	D-34
T	377	1	SNORKEL CYLINDER LIFTING DEVICE	-	-	-	SEE REF 56	-
T	378	1	INNER INDUCTION MAST LIFTING CLAMP ASSY	-	-	-	C/O PC'S 379-381	-
T	379	1	SPREADER BAR ASSY	-	-	-	SEE REF 57, FIG 2-9, SH 4, PC 4	-
T	380	1	SHROUD	-	-	-	SEE REF 57, FIG 2-9, SH 4, PC 1	-
T	381	1	SNORKEL INNER INDUCTION PIPE CLAMP	-	-	-	SEE REF 57, FIG 2-9, SH 4, PC 2	-
T	382	1	LIFTING DEVICE, PERISCOPE FAIRING CYLINDER ASSY	-	-	7556877-2	SEE REF 58	-
T	383	4	HOSE CLAMP	-	-	4730-01-089-4596	-	A-51
V	384	1	LIFTING DEVICE ASSEMBLY, AFT FAIRING	-	-	7094237-1	SEE REF 59	-
V	385	1	LIFTING DEVICE ASSEMBLY, FWD FAIRING	-	-	7094237-2	SEE REF 59	-
V	386	1	SAFETY STOP ASSEMBLY, STANDARD FAIRING	-	-	7094237-3	SEE REF 59	-
T	387	1	SAFETY STOP ASSEMBLY, SNORKEL FAIRING	-	-	-	SEE REF 59	-
V	388	2	SLED STOP ASSEMBLY	-	-	7094237-19	SEE REF 59	-
U	389	1	WIRE ROPE ASSEMBLY	→	→	-	C/O PC'S 98-100, 390, QTY 2: U/W ITEM 232, SEE NOTE 45	F-32
U	390	1	ROPE, WIRE, 1/2 DIA X 8'	RR-W-410	CRES	-	TYPE I, CLASS 2, CONSTRUCTION II	F-32

CONTINUED ON SHEET 81

SIZE	CAGE NO.	WT GRP	NAVSEA DRAWING NO.	REV
B	53711	904	4398614	V
SCALE - NONE			SHEET 75	

REVISIONS

REV	SHEET	DESCRIPTION	BY	DATE	APPROVED
P	ALL	REVISED AND REDRAWN IN AUTOCAD	NDI	6/15/99	WCT
R	1	REVISED DISTRIBUTION STATEMENT AND LIST; CHANGED NSWCCD CODE AND PHONE EXT.			
	2	REVISED TO REFLECT CHANGES/REVISIONS.			
	4	DELETED LINE NO. 10 & 34, ADDED 47 THRU 50.			
	5	ADDED 350 TO NOTE 5, 19 & 21; CHANGED NOTE 6B TO MIL-STD-2035 NONDESTRUCTIVE TESTING ACCEPTANCE CRITERIA. ALSO ADDED 6A.			
	6	ADDED NOTES 37, 38 & 39.			
	7	DELETED QQ-S-741 AND ADDED ASTM-A36/A36M TO ITEMS 9, 10, 14, 15, 16 & 17.			
	8	DELETED QQ-S-741 AND ADDED ASTM-A36/A36M TO ITEMS 32, 33, 34, 35, 36 & 53; ADDED 37 TO ITEMS 42, 47 & 51, DELETED ITEM 52.			
	9	DELETED QQ-S-741 AND ADDED ASTM-A36/A36M TO ITEMS 54, 56 AND 71. CHANGED PC 79.			
	10	DELETED ITEMS 81-92 & 94-104, CHANGED 105 TO BPS-15.			
	11	DELETED QQ-S-741 AND ADDED ASTM-A36/A36M TO ITEMS 106, 107, 108, 114 THRU 118.			
	13	DELETED 120 AND ADDED A53 TO ITEMS 163, 166 AND 181; ADDED A36M TO ITEMS 164, 167, & 182.			
	14	ADDED A36M TO ITEM 183; DELETED QQ-S-741 AND ADDED ASTM A36/A36M TO ITEMS 203, 204 AND 205.			
	15	DELETED QQ-S-741 AND ADDED ASTM A36/A36M TO ITEMS 218, 219, 220, 210, 227, 228 AND 233.			
	16	DELETED QQ-S-741 AND ADDED ASTM A36/A36M TO ITEM 234; ADDED QQ-N-281 AND NI-CU TO ITEM 238.			
	17	ADDED A36M TO ITEMS 284 AND 285.			
	18	ADDED ITEMS 288 THRU 291, DELETED QQ-S-741 AND ADDED ASTM A36/A36M TO ITEMS 299, 300, 301, 304 AND 305; ITEM 306, 1-3/4 WAS 1-1/2, 64 WAS 65, NEW NSN WAS 00-725-2317.			
	19	ADDED NSN LL-H52-5425 AND CHANGED ZONE TO C-23 FOR ITEM 325; DELETED QQ-S-741 AND ADDED ASTM-A36/A36M TO ITEMS 326, 327 AND 329; ADDED NSN 01-464-4930 AND PC 350 TO ITEM 330, ADDED NSN LL-H52-5427 AND ZONE D-23 TO ITEM 334; DELETED ITEM 335; ADDED NSN 01-464-4922 AND ZONE F-23 TO ITEM 336. ITEM 325 NSN WAS LL-H52-7510.			

REVISIONS

REV	SHEET	DESCRIPTION	BY	DATE	APPROVED
R	20	ADDED 348 TO SHEET AND B-20, CHANGED STA. 14 OF C-20 TO 7.625.	NDI	2/21/01	P.H.
	21	ADDED 338 TO SHEET, ASSEMBLY TAG VIEW E-21.			
	22	DELETED D-22 AND #52 FROM SHEET.			
	23	DELETED #335 FROM SHEET AND VIEW E-23, ADDED 1.250 TO STA 20 OF VIEW D-23 AND CHANGED A OF F-23 TO 17.00.			
	24	ADDED #348 TO SHEET AND NOTES.			
	25	ADDED 65 TO A-25, SEE NOTE 37 TO D-25 AND DELETED 335 FROM SHEET.			
	27	DELETED #52 FROM SHEET.			
	28	REVISED A-28, 6X WAS 4X.			
	32	DELETED SHEET 32.			
	36	FIRST LINE OF A-36 WAS 2150, DELETED BOTTOM TWO LINES DELETED B-36 ENTIRELY.			
	37	B-37, 4X WAS 2X.			
	39	C-39, 1.63 WAS .50.			
	40	ADDED 4X R 1.0 TO B-40. ADDED 349			
	41	REVISED 2.12 MEASURE OF C-41.			
	43	ADDED PC 349 TO VIEW D-43. CHANGED SH 53 TO 57.			
	44	ADDED "SEE NOTE 38" TO A-44, B-44 AND C-44; ADDED PC 350 TO VIEW D-44.			
	47	ADDED "SEE NOTE 38" TO A-47.			
	51	4X WAS 2X ON D-51, 1.50 WAS .75, 3.75 WAS 3.25 2.54 WAS 1.75 AND 1.50 WAS .75 ON C-51. CHANGED 2.25			
	55	ADDED 351			
	56	ADDED 350 TO B-56.			
	57	ADDED "SEE NOTE 38" TO NOTE 4.			
	61	ADDED STEPS 5.16, 5.16.1, 5.16.2, 5.16.3, 5.17 AND 5.17.1. ADDED NOTE.			
	63	DELETED 52 AND 81, REVISED 161 AND ADDED 291, 337, 348 AND 338.			
	69	ADDED FIGURES 20 AND 21.			
	70	REVISED ENTIRE SHEET, ADDED SHEETS 71, 72, 73 AND 74.			

REVISIONS CONTINUED ON SHEET 77

REVISIONS

REV	SHEET	DESCRIPTION	BY	DATE	APPROVED
S	1, 2	UPDATED TO REFLECT CHANGES, ADDED SHEET 75, REVISIONS.	NDI	12/16/02	P.H.
	3	REMOVED REFERENCES 5 THRU 11, 16, 18, 19, 20, 21, 23, 24, 29, 30, 34, 35. ADDED REFERENCES 50 AND 51.			
	4	REMOVED LINE NUMBERS 1 THRU 6, 21, 24, 33, 35. ADDED LINE NUMBERS 51 AND 52. ITEM 48 WAS "BRA-34".			
	8	REMOVED ITEM 48.			
	10	UNDELETED ITEMS 96 THRU 100. ITEM 96 REMARKS WAS "QTY 4: 2 EACH", REMOVED ITEM 81.			
	14	REMOVED ITEMS 202 THRU 206.			
	15	REMOVED ITEMS 207 THRU 215.			
	19	REMOVED ITEM 328 ADDED 24 IN REMARKS.			
	20	REVISED ASSEMBLY HEADING FOR ASSEMBLY 2, 4 AND 6.			
	21	REVISED ASSEMBLY HEADING FOR ASSEMBLY 42, REMOVED ASSEMBLY 48.			
	23	REMOVED ASSEMBLY 202, ASSEMBLY 325 WAS "TESTED AT 3,000 LBS."			
	27	REMOVED ASSEMBLY 48 IN TITLE.			
	28	REMOVED ALL.			
	30	REMOVED DETAIL B-30, C-30 & D-30. REMOVED "BRAKE LINING AND" FROM TITLE.			
	32	RE-INSTATED DETAIL F-32.			
	41	IN C-41, ITEM 352 WAS 291. IN A-41, ADDED WASHER, ITEM 352, TO END OF ITEM 239.			
	50	WELDMENT NOTE IN A-50 WAS "SEE REFERENCE 33, APPENDIX A".			
	55	DETAIL C-55, DWG NO. WAS -351. DETAIL A-55, 24 WAS 328			
	61	NOTE 5.17 WAS "ITEM 349".			
	62	REVISED NOMENCLATURE FOR ASSEMBLIES 2 AND 6.			
	63	IN TABLE 2 REMOVED ASSEMBLIES 48 & 202.			
	65	REMOVED FIG 7.			
	70	ADDED ITEM 352. ITEM 347 WAS 4 LG.			
	75	ADDED SHEET 75.			

REVISIONS

REV	SHEET	DESCRIPTION	BY	DATE	APPROVED
T	1	REMOVED DIST LIST, UPDATED DIST STATEMENT AND CAD MAINT BLOCKS, SHEET 1 OF 79 WAS "SHEET 1 OF 75".			
	2	UPDATED REVISION ON INDEX AFFECTING SHEET NOS. 1-13, 16-27, 29-34, 36-40, 43, 44 47, 51-57, 59-63, 67-75 & 77. ADDED ASSY "370" TO TITLES ON SHEET NOS. 21 & 25. MODIFIED TITLES FOR SHEET NOS. 20-27, 31-34, 43, 54-56, 68 & 71. REMOVED SHEET 73. RELOCATED EXISTING SHEET NOS. 74 & 75 TO SHEET NOS. 76 & 77. ADDED NEW SHEET NOS. 74, 75, 78 & 79.			
	3	REMOVED REFS 1-4, 12-15, 27, 28, 37, 38. ADDED REFS 52-59.			
	4	MODIFIED SYSTEM INDEX FOR LINE NOS. 9, 32, 39, 45-47 & 49, REMOVED LINE NOS 16-19, 27, 38, 40 & 50. ADDED LINE NOS. 53-56.			
	5	MODIFIED NOTES 6, 11 & 22, REMOVED NOTES 12, 16 & 17.			
	6	MODIFIED NOTES 25, 35, 36 & 37, REMOVED NOTES 32, 34 & 44. ADDED GENERAL NOTES 40-44.			
	7	CHANGED ZONES FOR ITEM NOS. 1, 2, 4, 6 & 21. QTY FOR ITEMS 11-13 WAS "1". REMOVED ITEM 21. ADDED "NOTE 7" FOR ITEM 22 & NSN FOR ITEM 23.			
	8	CHANGED ZONES FOR ITEM NOS. 37, 42, 47-50 & 52, REMOVED ITEMS 31, 32, 42, 49 & 50.			
	9	ITEM NO. 69: ADDED REMARK "SEE NOTE 18", REMOVED ITEM NOS. 56, 58, 64, 75-78 & 80.			
	10	CHANGED ZONES FOR ITEM NOS. 89 & 93. REMOVED ITEM NO. 93.			
	11	REMOVED ITEM NOS. 121-126, 128 & 129.			
	12	REMOVED ITEM NOS. 130-135, 138-143, 146-148, 150, 157 & 158.			
	13	REMOVED ITEM NOS. 159 & 160.			
	16	REMOVED ITEM NOS. 241-246.			
	17	ITEM NO. 281: ADDED REMARK "SEE NOTE 18".			

REVISIONS CONTINUED ON SHEET 78

REVISIONS

REV	SHEET	DESCRIPTION	BY	DATE	APPROVED
	18	ITEM NO. 304: 1 5/8 THK WAS 1/2 THK. ITEM NO. 298: DESCRIPTION WAS "ASSEMBLY 298, LIFTING CLAMP". ITEM NO. 307: QTY "4" WAS "8". REMOVED ITEM NOS. 288-291, 313 & 314.			
	19	ITEM 316: 1-1/2 WAS 1/12, ITEM 318: PORT WAS STBD. ITEM 325: P/N 3940-LL-H54-7510 WAS 3940-LL-H52-7510. ITEM NO. 330: DESCRIPTION WAS "ASSEMBLY 330, RADAR LIFTING DEVICE", REMOVED NSN, ADDED REMARKS "333, 353-365". ITEM NO. 331: DESCRIPTION WAS "LUG". ITEM NO. 332: DESCRIPTION WAS "DISK". ITEM NO. 333: QTY WAS "1", REMOVED DESCRIPTION "1 1/2 OD X .156 THK WALL". ITEM NO. 335: ZONE E-23 WAS B-25. REMOVED ITEMS 315, 316, 322, 323 & 336.			
	20	REMOVED ASSY "1" FROM SHEET TITLE. TABLE B-20: ADDED "NAVSAT" & "592" TO TITLE, REMOVED "BRN-3" & "158", ADDED ASSY 348 NOTE, TABLE D-20: ADDED TO TITLE "OE-592".			
	21	ADDED ASSY "370" & REMOVED "21" & "42" FROM SHEET TITLE. REMOVED TABLES A-21 & B-21, ADDED TABLE F-21.			
T	22	REMOVED ASSY "49", "50", "52" & "93" FROM SHEET TITLE. REMOVED TABLES A-22, B-22 & E-22.			
	23	REMOVED ASSY "335 & 336" FROM SHEET TITLE. ASSY 325 & 336: "PIPE LIFTING CLAMP" WAS "MAST LIFTING CLAMP". TABLE D-23: "10,300 LBS" WAS "11,000 LBS", DIM FOR LTR H OF "45°" WAS "60°". REMOVED TABLE F-23.			
	24	REMOVED ASSY "1" FROM SHEET TITLE. VIEW A-24: ADDED WELD SYMBOLS, DIMENSION ".50" WAS ".500" 2X. VIEW B-24: REMOVED DIMENSIONS ".88" & ".50" 2X, WELD NOTE "TYP" WAS "2X".			
	25	ADDED ASSY "370" TO SHEET TITLE & REMOVED ASSY "21", "42", "50", "335" & "336". VIEW B-25: ADDED WELD SYMBOLS, DIM ".38" WAS ".375", REMOVED ASSY -21, 42, 50, 335 & 336, ADDED ASSY -370. VIEW D-25: REMOVED ".88" DIM.			
	26	REMOVED VIEWS A-26 & B-26.			
	27	REMOVED ASSY "52" & "93" FROM SHEET TITLE. VIEW A-27: REMOVED SUBLABELS D-21, D-22 & E-22, ADDED "H" DIM & REMOVED "2X" FOR DIM "J". VIEW B-27: ADDED SUBLABEL D-23 & MODIFIED WELD.			

REVISIONS

REV	SHEET	DESCRIPTION	BY	DATE	APPROVED
	29	VIEW A-29: REMOVED SUBLABELS A-26, B-26 & A-28, VIEW B-29: DIMS ".98" WAS "1.09" 2X, "1.28" WAS "1.06" & "4.00" WAS "E". TABLE D-29: REMOVED ASSY 21, 42, 48-50, 52, 93 & 336, ADDED ASSY 370. TABLE E-29: REMOVED SUBLABEL B-30, ADDED SUBLABELS A-72 & B-72. TABLE F-29: ADDED "AND 23" TO NOTE.			
	30	VIEW A-30: REMOVED DIMENSION "1".			
	31	REMOVED "ASSY 77 ANTENNA LIFTING SLING AS-2591, BLA-4 AND ESM SAFETY BLOCK" & CALLOUT BUBBLE FOR ITEM NO. 32 FROM SHEET TITLE. REMOVED INSTALLATION AID NOTE. REMOVED VIEWS B-31, C-31, D-31, E-31 & F-31.			
	32	REMOVED "ASSY 81-BUOY LIFTING SLING" FROM SHEET TITLE. REMOVED NOTES "**" & "***". VIEW B-32: ADDED ITEM NO. 87. VIEW F-32: REMOVED SUBLABEL D-32.			
	33	REMOVED SHEET TITLE & VIEWS A-33 & B-33.			
T	34	REMOVED "INSTALLATION AID ASSY & DETAIL" FROM SHEET TITLE & ADDED "SNORKEL LIFTING SUPPORT BRACKET". REMOVED VIEWS A-34, B-34 & C-34. ADDED VIEW D-34 SNORKEL LIFTING SUPPORT BRACKET.			
	35	REMOVED FROM TITLE "ASSY 138 - PROTECTIVE COVER". ALIGNED VIEWS B-35 & C-35. REMOVED VIEW A-35.			
	36	TABLE A-36 & VIEW C-36:: ADDED TO BRR-6 "OR 6B". REMOVED VIEW D-36.			
	37	TABLE ABOVE VIEW A-37: ADDED TO BRR-6 "OR 6B", REMOVED ROW FOR p2 SYSTEM.			
	38	VIEW B-38: ADDED TO WELD "NOTE 6". VIEW D-38: REMOVED ASSY 246 & REMOVED DIM "65.0 ±.5 FOR 246".			
	39	VIEW C-39: REMOVED DIMENSION "1.63".			
	40	VIEW C-40: REMOVED "* ITEM 96...." NOTE, REMOVED "*" & REMOVED "A-34" 2X.			
	42	ADDED "(USED ONLY FOR RADAR AB-1185 PEDESTAL)" TO THE SHEET TITLE.			

REVISIONS CONTINUED ON SHEET 79

REVISIONS	SIZE	CAGE NO.	WT GRP	NAVSEA DRAWING NO.	REV
	B	53711	904	4398614	T
	SCALE - NONE			SHEET 78	

REVISIONS

REV	SHEET	DESCRIPTION	BY	DATE	APPROVED
	43	REMOVED "ASSY 157–LIFTING PLATE SEE SHEET 4 FOR APPLICATION" FROM SHEET TITLE & ADDED "LIFTING RING AND WEIGHT TEST FIXTURE". VIEW C–43 WELDMENT TEST NOTE: "117" WAS "113". REMOVED VIEW A–43.			
	44	VIEW A–44: REMOVED "(EXCEPT ASSY 2, 298 & 330)". VIEW B–44: REMOVED "VLF UHF/IFF BPN–3 BQR–19 BRA–9, 15, 19, 21, 31 & OE–158, ADDED "NAVSAT", "OE–538" & "–592" & ANNOTATION "SAMPLE". VIEW C–44: ASSY "298" WAS "3", "4.50" DIA WAS "2.875", "2,000" LB WAS "1,500". VIEW D–44: "4,100" LBS WAS "2,200" & ADDED ITEM NO. 40 CALLOUT BUBBLE.			
	47	VIEW A–47: DWG NO. "SS–904–4398614–247" WAS "SS–904–4398614–263". VIEW B–47: DWG NO. "SS–904–4398614–267" WAS "SS–904–4398614–276".			
	51	VIEW A–51 & B–51: ADDED HOSE CLAMPS TO THE SUPPORT BARS, ADDED CALLOUT 383. VIEW C–51: DIMENSION "2.54" WAS "(2.54)", WELD NOTE "4X" WAS "2X". VIEW D–51: MODIFIED WELD SYMBOL.			
T	52	VIEWS B–52 & D–52: ADDED 292 CALLOUT BUBBLE. VIEW B–52: ADDED "THRU" TO ø1.625 DIMENSION. VIEW C–52: REMOVED 292 CALLOUT BUBBLE.			
	53	VIEW A–53: ADDED "(TYP)" TO 4.00 DIMENSION. VIEW C–53: MODIFIED TO SHOW 3.00 DIM CORRECTLY. REMOVED VIEWS B–53 & F–53.			
	54	REMOVED "& TEST PLATE" FROM SHEET TITLE. VIEW A–54: ADDED "(1.38)" DIMENSION. VIEW C–54: ADDED 321 CALLOUT BUBBLE. REMOVED VIEWS B–54 & D–54.			
	55	SHEET TITLE: "PIPE LIFTING CLAMP AND SPREADER BAR" WAS "MAST LIFTING CLAMP". VIEW A–55: ADDED "NOTE 6". REMOVED VIEW C–55.			
	56	SHEET TITLE WAS "ASSY 330 – RADAR LIFTING DEVICE". VIEW A–56: REMOVED "SLEEVE" & DIMENSION "(ø1.19)", DIM ".156 WALL" WAS "(.156)" & DIM "ø1.50" WAS "(1.50)". VIEW B–56: REMOVED "LIFTING DEVICE".			
	57	WARNINGS 5.1, 5.2 & 5.3: REMOVED "NO DEFECT IS ALLOWED". NOTE 5.1.1: REMOVED ASSY 202 & FIG 7.			
	59	WARNING 5.8: REMOVED "NO DEFECT IS ALLOWED".			
	60	NOTE 5.9: ADDED ASSY 379. WARNINGS 5.11, 5.12 & 5.13: REMOVED "NO DEFECT IS ALLOWED". REMOVED NOTES 5.10, 5.14.1 & 5.14.2, ADDED NEW 5.14.1 NOTE.			

REVISIONS

REV	SHEET	DESCRIPTION	BY	DATE	APPROVED
	61	REMOVED NOTE 5.14.2, ADDED NOTES 5.18, 5.18.1, 5.19 & 5.19.1. WARNINGS 5.16 & 5.16.1: REMOVED "NO DEFECT IS ALLOWED".			
	62	ASSY NO. 2: REMOVED "BRN–3", "OE–158/BQR" & "IDES/BRD–7", ADDED "OE–592" & "NAVSAT". ASSY NO. 6: ADDED "OE–592 ANTENNAS".			
	63	REMOVED ASSY NOS. 49, 50, 77, 93, 291, 335 & 336. ASSY 293: ADDED "(293)" & "SEE NOTE 5.7". ASSY 325 & 336: PIPE CLAMP WAS "LIFTING" CLAMP. ASSY 330: "4,100" WAS "2,200". ASSY 334: ADDED "(SEAWOLF)". ADDED ASSY 370, 377, 381 & 382. TABLE 2: REMOVED ASSY NOS. 93 & 370, ADDED ASSY 377.			
	67	FIGURE 12: ADDED NOTE "FOR ASSY 2" & ITEM BUBBLES 353 & 354 & "FOR ASSY 334".			
	68	SHEET TITLE: "TEST SETUP" WAS "TEST SETUPS". REMOVED FIGURES 14, 15 & 16.			
T	69	ADDED FIGURE 21, REMOVED FIGURE 21.	NDI	1/20/06	P.H.
	70	REMOVED ITEM NO. 351, ADDED ITEM NOS. 353–362.			
	71	VIEW A–71: DELETED DIMENSIONS "2.50" 2X, ADDED ANNOTATION "A–72" TO ITEM 346, "B–72" TO ITEM 344 & "C–72" TO ITEM 345.			
	72	VIEWS A–72 & B–72: ADDED SUBLABEL "A–71". LABEL "C–72" WAS "C–5", REMOVED ".50" DIMENSION 2X, DIMENSION "3.50" WAS "3.500".			
	73	REMOVED VIEWS A–73, B–73, C–73, D–73 & E–73.			
	74	RELOCATED REVISIONS TO SHEET NO. 76, ADDED NEW SHEET NO. 74 (ASSY 330 – BPS–16 RADAR MAST FIXTURES).			
	75	RELOCATED REVISIONS TO SHEET NO. 77, ADDED NEW SHEET NO. 75 (PARTS & MATERIAL LIST – ITEM NOS. 363–388).			
	78	ADDED NEW SHEET (REVISIONS CONTINUED).			
	79	ADDED NEW SHEET (REVISIONS CONTINUED).			

REVISIONS CONTINUED ON SHEET 80

REVISIONS	SIZE	CAGE NO.	WT GRP	NAVSEA DRAWING NO.	REV
	B	53711	904	4398614	U
	SCALE – NONE			SHEET 79	

REVISIONS

REV	SHEET	DESCRIPTION	BY	DATE	APPROVED
U	1	"SHEET 1 OF 80" WAS "SHEET 1 OF 79", ADDED RESTRICTED EXPORT WARNING & SHIP APPLICABILITY.	NDI		
	2	UPDATED TITLES & REVISIONS ON INDEX & ADDED SHEET 80.			
	3	ADDED REFERENCE 60.			
	4	REMOVED LINE NUMBERS 7, 8, 13, 22, 36 & 41. LINE NUMBER 15: "NAVSAT" WAS "BRN-3". LINE NUMBER 46: ADDED INNER DESIGNATION & REMOVED CYL DIA "16.5". ADDED LINE NUMBERS 57 THRU 59.			
	5	REMOVED NOTES 10, 14 & 15. NOTE 20: "UNPAINTED CLAMP HALVES" WAS "CLAMP", REMOVED "IS NOT AVAILABLE". NOTE 22: ADDED "774" CLASS.			
	6	NOTE 25: REMOVED "THE", "THE FACILITY" & "(E-38)", "VICE" WAS "VIA". REMOVED NOTES 41, 42 & 43, ADDED NOTE 45.			
	7	ITEM NO 22 MATL SPEC "NASM 20613-6P14" WAS "MS20613-6P14", ITEM NO 23 MATL SPEC "NASM 20613-6P16" WAS "MS20613-6P16".			
	8	ITEM NO 51 REMARKS: ADDED PC "22" & REMOVED PC "23".			
	9	ITEM NOS 59, 60 & 61: ADDED REMARKS "SEE NOTE 23". ITEM NO 62: ADDED REMARKS "SEE NOTE 20", DELETED REMARKS "SCOTCH-WELD 2216 B/A GRAY". REMOVED ITEM NO 72.			
	10	ITEM NO 96: ZONE "F-32" WAS "D-32". ITEM NO 99: REMOVED DESCRIPTION "X 52 LG" & ADDED REMARKS "OR EQUIV".			
	11	REMOVED ITEM NOS 119 & 120.			
	14	ITEM NO 185: ADDED REMARKS "SEE NOTE 25".			
	15	REMOVED ITEM NOS. 226-228, ITEM NO. 229: DELETETED REMARKS QTY "6: 2 U/W 226", ITEM NO. 232: ADDED NSN "3904-01-544-0133".			
	18	ITEM NOS. 293 & 294: ADDED "1045" TO MATL SPEC & ADDED REMARKS "CD, 91 KSI MIN TENSILE STRENGTH, 77 KSI MIN YIELD STRENGTH".			
	19	ITEM NO 325: DESCRIPTION "SNORKEL INDUCTION PIPE CLAMP" WAS "LIFTING CLAMP", PART NO. "3940-01-537-4708" WAS "3940-LL-H52-7510", REMOVED REMARKS "& 12", ITEM NO. 330: PART NO. "3940-01-537-6356" WAS "3940-01-464-4930", ITEM NO. 334: PART NO. "3940-01-537-6352" WAS "LL-H52-5427".			
	20	HEADING FOR ASSEMBLY 2: REMOVED "BRA" & "-34". HEADING FOR ASSEMBLY 6: REMOVED "AN/BRA-34".			

REVISIONS

REV	SHEET	DESCRIPTION	BY	DATE	APPROVED
U	23	VIEW C-23: "PIPE CLAMP" WAS "PIPE LIFTING CLAMP". VIEW D-23: ADDED "SSN 774 CLASS" FOR ASSY 334.	NDI	5/27/08	P.H.
	24	VIEW A-24: ADDED "NOTES 7, 30".			
	25	VIEW B-25: ADDED "SEE NOTE 37". VIEW D-25: REMOVED "SEE NOTE 37", ADDED ℄ & ORIENTED DEPICTION TO LINE UP WITH VIEW B-25.			
	27	VIEW A-27: ADDED "NOTES 7, 30" FOR ITEM 23.			
	29	TABLE D-29: REMOVED ASSY 335. VIEW E-29: DIMENSION ".12 +.01/-.00" WAS ".125" .109.			
	32	SHEET TITLE: ADDED ASSY "389", NOTES: ADDED ITEM "390". VIEW F-32: ADDED CALLOUT FOR ASSY 389 & ADDED TABLE FOR DIMENSIONS "A" & "B".			
	39	REMOVED VIEWS A-39 & B-39, UPDATED SHEET TITLE.			
	40	ADDED CALLOUT FOR ASSY "389" & "SEE NOTE 45".			
	55	VIEW A-55: ADDED "NOTES 7, 30" FOR ITEM 22.			
	62	LIFTING CLAMP ASSY NOS. (2) & (6): DELETED NOMENCLATURE "AN/BRA-34".			
	63	LIFTING CLAMP ASSY NO. (325): ADDED DESIGNATIONS "21 CLASS" & "774 CLASS" & REMOVED FIGURE "2", ASSY NO. (334): ADDED "(21 CLASS, 774 CLASS)", ASSY NO. (381): ADDED NOMENCLATURE "PIPE", REMOVED "LIFTING", TABLE 2: ADDED MAST ASSY 382.		5/27/08	J.M.
	70	ITEM NO 338: ADDED REMARKS C/O "23", "62", ITEM NOS 344, 345 & 346: ADDED REMARKS "SEE NOTE 23", ITEM NO 348: ADDED PART NO. "3940-01-537-6353", REMARKS: NOTE "5" WAS "15".			
	71	ADDED CALLOUT FOR ITEM 62, 3 PLACES. ADDED "NOTES 7, 30" FOR ITEM 23.			
	75	ITEM NO. 370: ADDED "SEE NOTES 5, 19, 21 & 37". ITEM NO. 371: REMOVED "SEE NOTES 41-43". ITEM NO. 381: DESCRIPTION "PIPE" CLAMP WAS "LIFTING", ADDED ITEM NOS. 389 & 390.			
	79	ADDED "REVISIONS CONTINUED ON SHEET 80".			
	80	ADDED NEW SHEET (REVISIONS CONTINUED).			
		AUTH BY ECP 28002			

REVISIONS CONTINUED ON SHEET 84

	SIZE	CAGE NO.	WT GRP	NAVSEA DRAWING NO.	REV
REVISIONS	B	53711	904	4398614	V
	SCALE - NONE			SHEET 80	

LIST OF PARTS FOR ONE ASSEMBLY (CONTINUED FROM SHEET 75)

REV	ITEM NO.	QTY REQD	DESCRIPTION	MATERIAL SPECIFICATIONS	MATERIAL REQUIRED	NSN OR MANUF PART NO.	REMARKS	ZONE
V	391	1	ASSEMBLY 391, LIFTING DEVICE	–	–	–	C/O PC'S 331, 332, 350	B–56
V	392	1	PERISCOPE FAIRING HOIST CYLINDER INSTALLATION SAFETY FIXTURE	–	–	7487090–1	SEE REFERENCE 61	–
V	393	1	ADCP LIFTING FIXTURE	–	–	6726900–65	–	–
V	394	2	LIFTING EYE, TYPE 8 ONLY	–	–	5340–01–406–8042	SEE REFERENCE 63	A–51
V	395	1	WEIGHT TEST FIXTURE, TYPE 8 ONLY	AISI/SAE 1045	STEEL	–	CD, 91 KSI MIN TENSILE STRENGTH, 77 KSI MIN YIELD STRENGTH	F–52
V	396	1	LIFTING DEVICE ASSEMBLY, HDR AFT FAIRING	–	–	7094237–42	–	–
V	397	1	LIFTING DEVICE ASSEMBLY, HDR FWD FAIRING	–	–	7094237–43	–	–
V	398	1	SAFETY BLOCK, HDR FAIRING	–	–	7094237–50	–	–
V	399	1	PUSH RING, 6.50 O.D. X .75 WALL	AISI 1026	STEEL	–	MAKE FROM STANDARD TUBING	C–83
V	400	1	CLAMP HALF	ASTM B211	ALUMINUM	–	6061–T6, SEE NOTE 47	A–82
V	401	1	CLAMP HALF	ASTM B211	ALUMINUM	–	6061–T6, SEE NOTE 47	A–82
V	402	10	SCREW, SKT HD, 1/4–20UNC–3A X 1.50 LG	NASM 16995–54	CRES	–	–	E–83
V	403	2	CUSHION, .062 THK	AMS 7276	RUBBER	–	TY II, CL I	A–82
V	404	A/R	ADHESIVE	COML	MMM–A–121	–	–	A–82
V	405	2	NAME PLATE, .040 THK	6061–T6	ALUMINUM	–	SEE NOTE 48	A–83
V	406	8	SCREW, PAN HEAD, PHILLIPS, #4–40UNC X .18 LG	300 SERIES	CRES	91400A104	McMASTER–CARR OR EQUAL	E–83
V	407	1	KIT, WEIGHT TESTING	–	–	–	C/O PC'S 408 & 409	–
V	408	1	MANDREL, 5.25 O.D. X .50 WALL	AISI 1026	STEEL	–	MAKE FROM STANDARD TUBING	D–83

SIZE	CAGE NO.	WT GRP	NAVSEA DRAWING NO.	REV
B	53711	904	4398614	V
SCALE – NONE			SHEET 81	

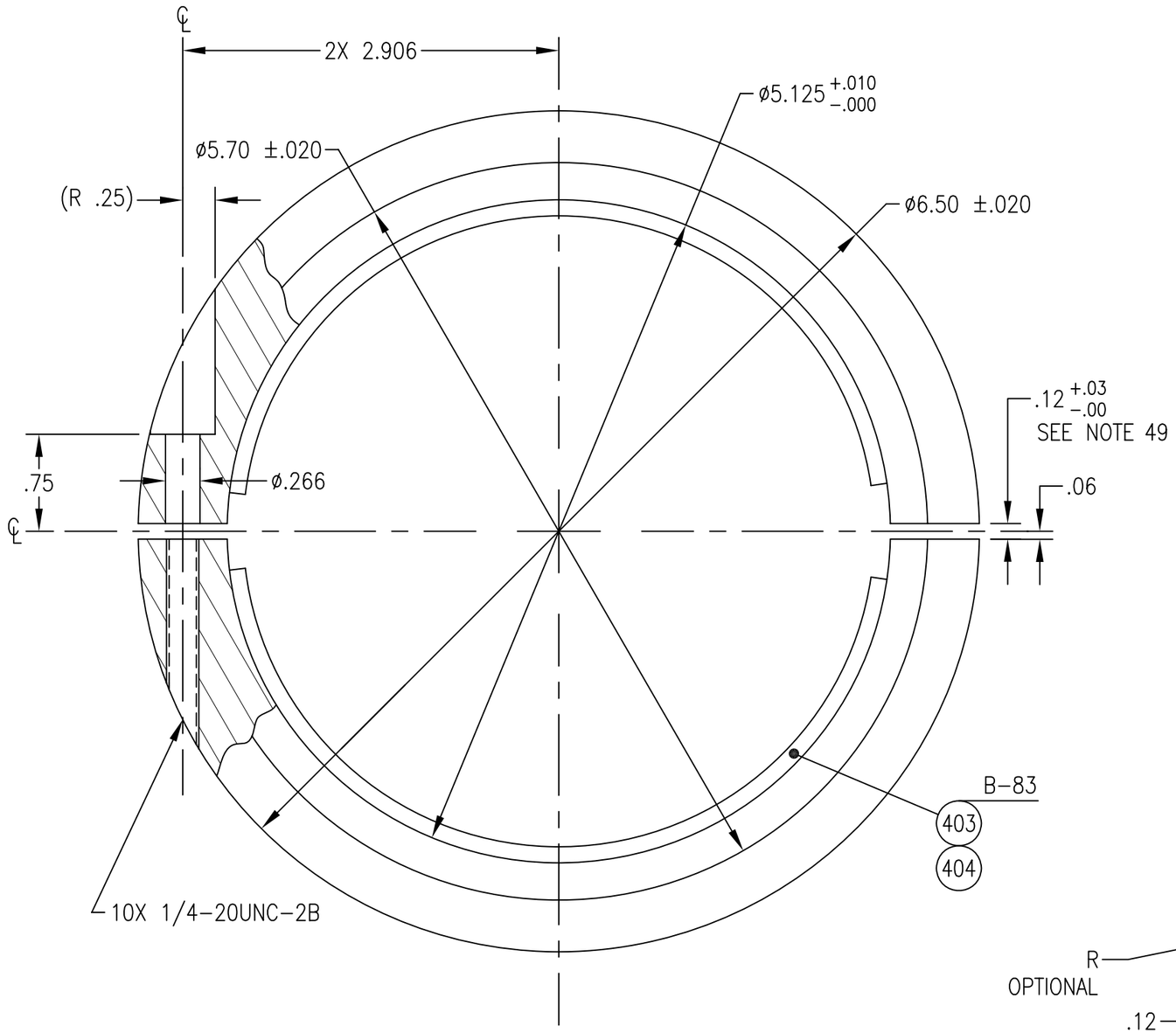

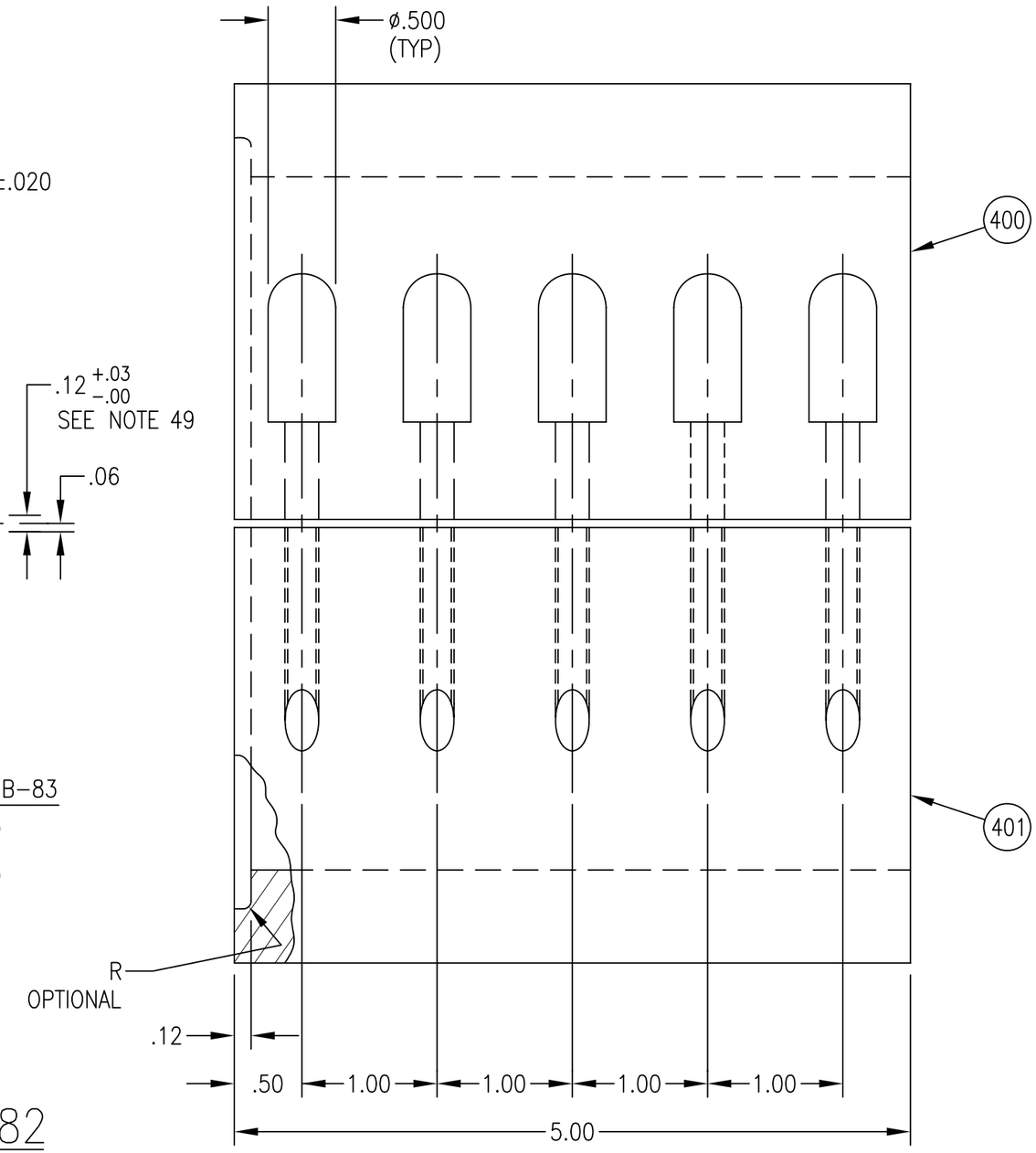

A−82
(E−83)

ASSEMBLY 357, MAST CLAMP	SIZE	CAGE NO.	WT GRP	NAVSEA DRAWING NO.	REV
	B	53711	904	4398614	V
	SCALE − 1/1			SHEET 82	

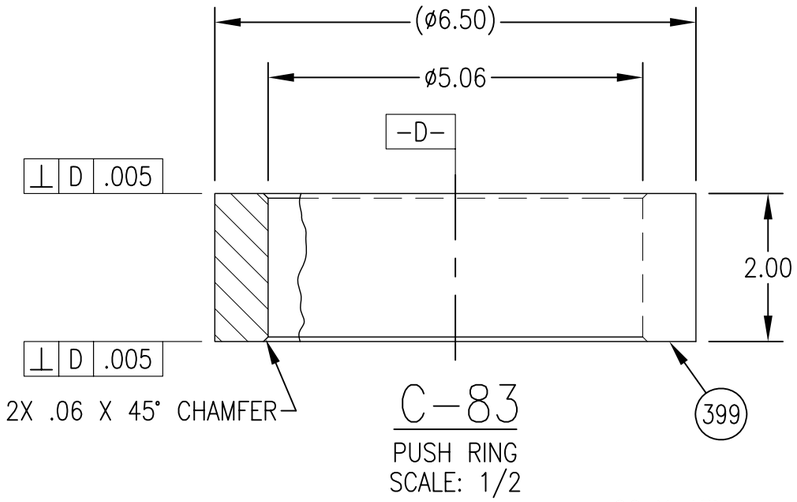

C-83
PUSH RING
SCALE: 1/2

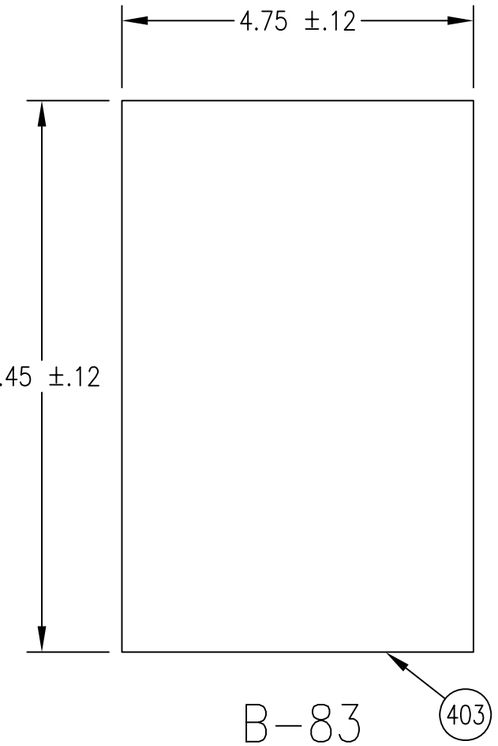

B-83
CUSHION
SCALE: 1/2
(A-82)

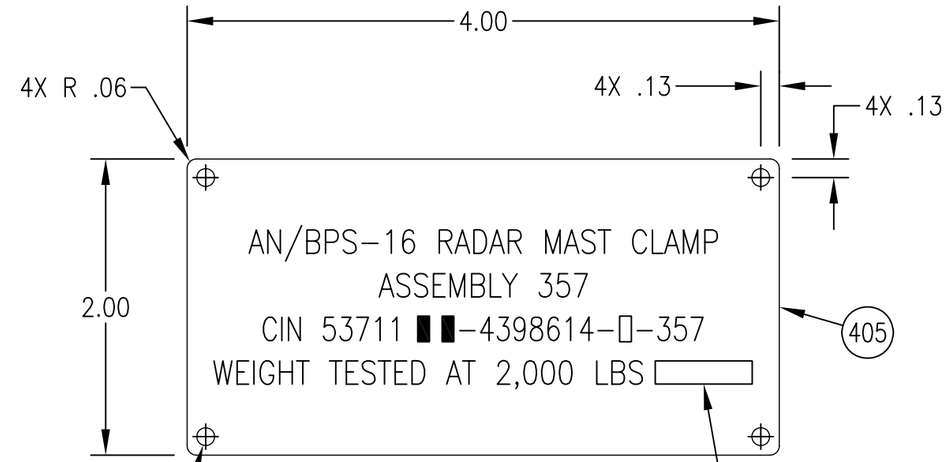

A-83
NAMEPLATE
SCALE: 1/1
(E-83)

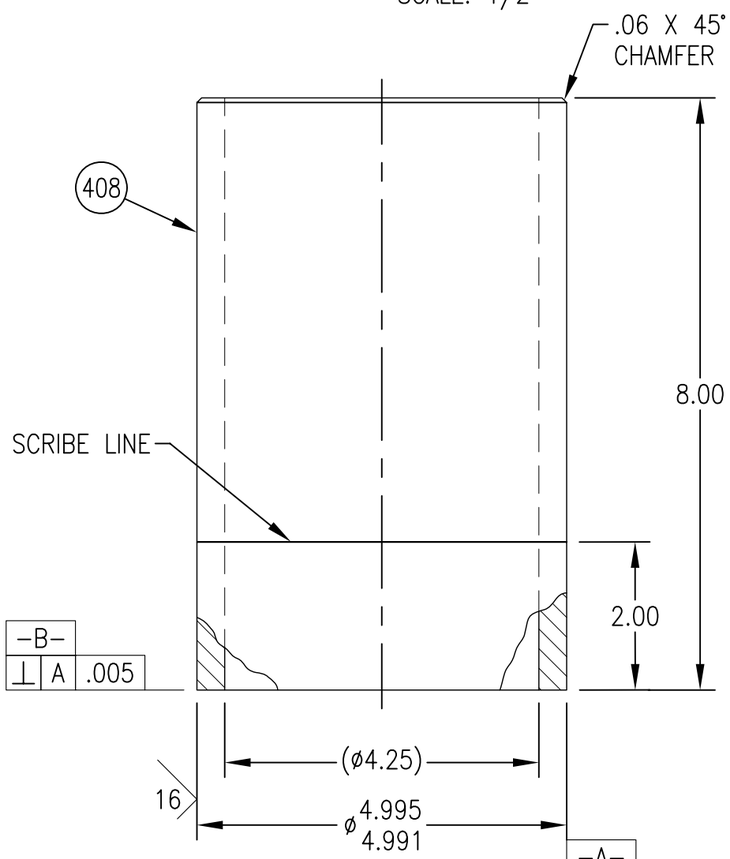

D-83
MANDREL
SCALE: 1/2

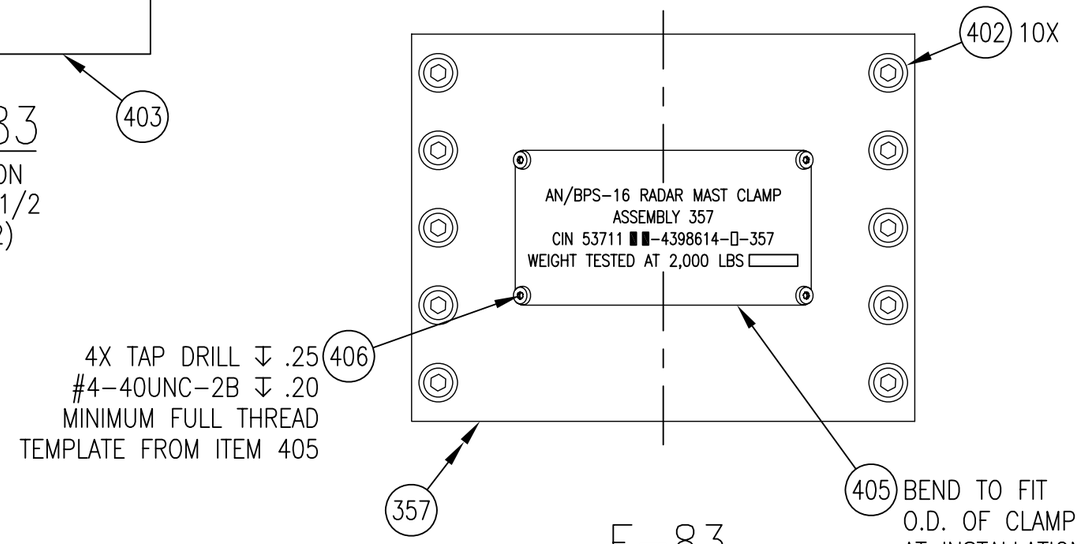

E-83
SCALE: 1/2
(A-82)

MANDREL, PUSH RING, CUSHION
AND NAMEPLATE

SIZE	CAGE NO.	WT GRP	NAVSEA DRAWING NO.	REV
B	53711	904	4398614	V
SCALE – AS NOTED			SHEET 83	

REVISIONS

REV	SHEET	DESCRIPTION	BY	DATE	APPROVED
V	1	SHEET COUNT "1 OF 85" WAS SHEET "1 OF 80". UPDATED DISTRIBUTION STATEMENT, WARNING AND SHIP APPLICABILITY REV.	NDI		
	2	LINED-OUT SHT NO. 42 FOR ASSY 105. SHT NO. 52: "SUPPORT BAR" WAS "LIFTING EYE". SHT NO. 62: ADDED "TEST PROCEDURE FOR WEIGHT HANDLING EQUIPMENT &". ADDED SHEETS 81-85. UPDATED REV.			
	3	ADDED REFERENCES 61-66.			
	4	LINED-OUT LINE NO. 39 FOR ASSY 105. LINE NO. 45: CHECKED INNER MAST AND ADDED CYL DIA. ADDED LINE NUMBERS 60 & 61.			
	5	NOTE 5: ADDED ITEM "407". NOTE 19: CODE IDENT "53711" WAS "25685".			
	6	NOTE 27: PAINT SPEC "MIL-DTL-24441/20 AND /21" WERE "MIL-P-24441/20 AND /21". NOTE 45: "6 FT" WAS "6 FT 6 INCHES". ADDED NOTES 46-49.			
	7	ITEM NOS. 16, 17, 27 & 28: ZONE "A-27" WAS "VAR". ITEM NO. 24: LINED-OUT REMARKS "42" & "50" AND MATERIAL SPEC "NASM 90725" WAS "MS 90725". ITEM NOS. 27 & 28: LINED-OUT REMARKS "48", "49" & "52".			
	8	ITEM NO. 29: LINED-OUT REMARKS "1 U/W 157". ITEM NOS. 29 & 30: ZONE "A-27" WAS "VAR". ITEM NOS. 29 & 30: LINED-OUT REMARKS "48", "49" & "52". ITEM NO. 30: MATERIAL SPEC "NASM 35338" WAS "MS 35338". ITEM NO. 39: MATERIAL SPEC "MIL-PRF-24635" WAS "DOD-E-24635".			
	9	ITEM NO. 54: LINED-OUT ZONE "A-26". ITEM NO. 70: MATERIAL SPEC "ASTM-A-120" WAS "WW-P-406".			
	10	LINED-OUT ITEM NO. 105.			
	11	LINED-OUT ITEM NOS. 106-111. ITEM NO. 116: ZONE "C-43" WAS "VAR".			
	12	ITEM NO. 149: ZONE "A-37" WAS "VAR".			
	13	ITEM NO. 161: REMARKS "162, 165, 168-172, 177" WAS "162-177". ITEM NO. 168: MATERIAL SPEC "NASM 35308" WAS "MS 35308". ITEM NO. 169: MATERIAL SPEC "NASM 35338" WAS "MS 35338". ITEM NO. 170: MATERIAL SPEC "NASM 35650" WAS "MS 35650". ITEM NO. 172: ZONE "A-37" WAS "D-36". ITEM NO. 177: ZONE "A-37" WAS "F-38".			

REVISIONS

REV	SHEET	DESCRIPTION	BY	DATE	APPROVED
V	14	ITEM NO. 199: ZONE "C-36" WAS "VAR".	NDI		
	15	ITEM NO. 229: ZONE "B-40" WAS "VAR". ITEM NO. 232: NSN "3940-" WAS "3904-".			
	17	ITEM NO. 264: ZONE "A-45" WAS "-" AND MATERIAL SPEC "MIL-DTL-1222" WAS "MIL-S-1222". ITEM NOS. 273-275: MATERIAL SPEC MIL-DTL-1222" WAS "MIL-B-857". ITEM NO. 286: MATERIAL SPEC "NASM 90725" WAS "MS90725".			
	18	ITEM NO. 292: LINED-OUT MATL SPEC & MATL REQD, REMARKS AND ADDED REMARKS "SEE REFERENCE 62". ITEM NOS. 292, 295 & 296: CORRECTED QTY REQD TO "2". ITEM NOS. 292 & 294: ADDED DESCRIPTION "TYPE 18 ONLY". ITEM NO. 293 DESCRIPTION "SUPPORT BAR" WAS "HOLDING ROD". ITEM NO. 296 ADDED MATL SPEC AND MATL REQUIRED. ITEM NO. 299: ZONE "C-35" WAS "D-35". ITEM NOS. 300-301: ZONE "C-35" WAS "-". ITEM NO. 302: ZONE "B-35" WAS "C-44". ITEM NOS. 307-308: ZONE "B-35" WAS "-".			
	19	ITEM NOS. 319-320: ZONE "VAR" WAS "A-54". ITEM NO. 324: ZONE "C-54" WAS "C-64". ITEM NO. 330: LINED-OUT REMARKS "331", "332" & "350" AND ADDED REMARKS "391", ZONE "SH 56" WAS "B-56".			
	20	VIEWS 20-B, C & D: ADDED "SEE NOTE 26".			
	21	VIEW E-21: ADDED "SEE NOTE 26".			
	23	VIEW D-23: ADDED "SEE NOTE 26". ASSY 334 TABLE: "13,100" WAS "10,300".			
	24	VIEW A-24: "3/16" WELD WAS "1/4", "2X" WAS "TYP", ADDED 3/16 WELD.			
	25	VIEW B-25: DIMS "(1.50)" WAS ".38", & "(.88)" WAS ".63".			
	29	TABLE D-29: "9.50" WAS "9.00" & "10.00" AS "12.25".			
	34	VIEW D-34: ADDED CALLOUT BUBBLE FOR ITEM 371.			
	35	VIEW B-35: ADDED ANNOTATION "C-44" FOR ITEM 302.			
	42	LINED-OUT SHEET (ASSY 105).			
	44	VIEWS 44-A, B, C & D: CODE IDENT "53711" WAS "25685". VIEW D-44: ASSY "391" WAS "330" 2 PLACES.			

REVISIONS CONTINUED ON SHEET 85

REVISIONS	SIZE	CAGE NO.	WT GRP	NAVSEA DRAWING NO.	REV
	B	53711	904	4398614	V
	SCALE - NONE			SHEET 84	

REVISIONS

REV	SHEET	DESCRIPTION	BY	DATE	APPROVED
V	50	VIEW C–50: ITEM "282" WAS "285" & CORRECTED DEPICTION OF ITEMS 286 & 287.	NDI		
	51	SHEET TITLE: ADDED "TYPE 8 & 18". VIEW A–51: "TYPE 18 ONLY" WAS "B–52", ADDED ITEM 394 & "TYPE 8 ONLY". VIEW B–51: TITLE "ADAPTER SUPPORT BAR" WAS "ADAPTER BAR" & ADDED "SEE NOTE 46". ADDED "TYPE 18 ONLY" FOR ITEM 292 & ADDED ITEM 394 WITH ANNOTATIONS.			
	52	SHEET TITLE: "SUPPORT BAR" WAS "HOLDING ROD" & LINED–OUT "LIFTING EYE". LINED–OUT VIEWS 52–A, B, C & D. VIEW F–52: ADDED HAND STAMP NOTE, ITEM 395, "TYPE 8 ONLY" & "TYPE 18 ONLY". DIMENSION "A" WAS ".688", DIMENSION "B" WAS "1.376". ADDED TABLE G–52.			
	54	VIEW F–54: ADDED ITEM NO. 321.			
	56	VIEW B–56: ITEM NO. "391" WAS "330", CORRECTED LOCATION OF LABEL PLATE, ITEM 350.			
	57	ADDED "NEW AND IN–SERVICE" TO TEST PROCEDURE NOTE. ADDED "IN ACCORDANCE WITH 6.1" TO STEP 5.1 NOTE.			
	59	TEST PROCEDURE 5.7: "BARS & LIFTING EYES" WAS "BAR" AND TYPE "8 & 18" WAS TYPE "18".			
	60	TEST PROCEDURE 5.11: "LIFTING LUGS (297) AND SUPPORT BRACKETS (372, 373)" WAS "BRD–7 AN/BLD–1" AND ADDED NO RECERTIFICATION NOTE. LINED–OUT TEST PROCEDURE 5.12 (ASSY 226) AND WARNING NOTE.			
	61	TEST PROCEDURE 5.15: ASSY "391" WAS "330". TEST PROCEDURE 5.16: LINED–OUT "PERISCOPE" AND ASSY "161" WAS "162". LINED–OUT TEST PROCEDURE 5.18. ADDED TEST PROCEDURE 5.20. RELOCATED TEST PROCEDURE 6 TO SHEET 62.			
	62	SHEET TITLE: ADDED "TEST PROCEDURE FOR WEIGHT HANDLING EQUIPMENT &". TEST PROCEDURE 6.1 NOTE COMPLIMENTARY REMOVED. LIFTING CLAMP ASSY 4: LINED–OUT "AN/BQR–19 AND".			
	63	ASSY (293): "TYPE 8 AND 18" WAS "TYPE 18". LINED–OUT ASSY (309). ASSY (334): WEIGHT "13,100" WAS "10,300". ADDED ASSY (357) & ADDED ASSY (357) IN TABLE 2. ASSY (382): LINED–OUT "PIPE" FROM NOMENCLATURE.			
	66	FIGURE 10: ADDED "TYPE 18 ONLY" FOR ITEM 294 AND ADDED ITEM 395 & "TYPE 8 ONLY".			

REVISIONS

REV	SHEET	DESCRIPTION	BY	DATE	APPROVED
V	67	FIGURE 12: ITEM NO. "372" WAS "353" & "373" WAS "354".	NDI	4/25/12	J.M.
	69	FIGURE 18: ITEM NO. "391" WAS "330". ADDED FIGURE 22.			
	70	ITEM NO. 347: MATERIAL SPEC "NASM 90725" WAS "MS 90725". ITEM NO. 348: ZONE "B–20" WAS "B–24". ITEM NO. 357: ADDED DESCRIPTION "ASSEMBLY 357", LINED–OUT PART NO. "1859730", REMARKS "C/O 400–406" WAS "SEE NOTE 40" AND ADDED ZONE "A–82".			
	75	ITEM NO. 370: LINED–OUT ZONE "B–25". ITEM NO. 384: ADDED P/N "7094237–1". ITEM NO. 385: ADDED P/N "7094237–2". ITEM NO. 386: ADDED P/N "7094237–3". ITEM NO. 388: ADDED P/N "7094237–19". CORRECTED ROW SEPARATOR BETWEEN ITEMS 379 & 380. ADDED NOTE: PARTS LIST "CONTINUED ON SHEET 81".			
	80	ADDED NOTE: REVISIONS ""CONTINUED ON SHEET 84".			
	81–85	ADDED NEW SHEETS 81–85.			
		AUTH BY ECP 12002			

REVISIONS	SIZE	CAGE NO.	WT GRP	NAVSEA DRAWING NO.	REV
	B	53711	904	4398614	V
	SCALE – NONE			SHEET 85	