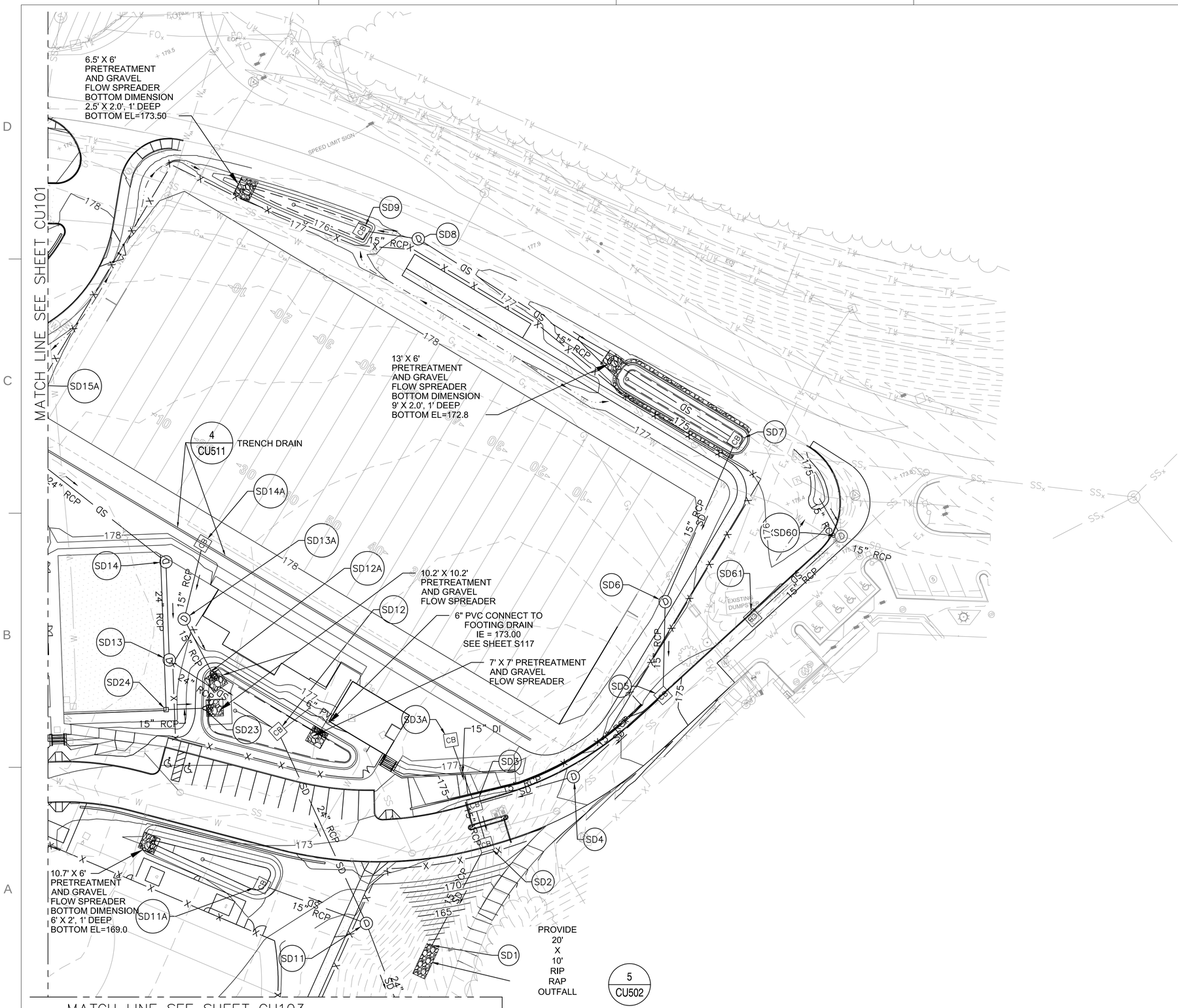

NOTES:

1. FOR STORM DRAIN STRUCTURE TABLES, SEE SHEET CU701.
2. FOR STORM DRAIN PIPE SCHEDULE, SEE SHEET CU701.
3. FOR STORM DRAIN PROFILES, SEE SHEETS CU311 TO CU316.

0 30 60
SCALE: 1" = 30'
SCALE AT FULL SIZE

NAVFAC

COMMONWEALTH OF VIRGINIA
ALAN KARL ARNOLD
Lic. No. 029959
10-13-2016
PROFESSIONAL ENGINEER
SEAL

EWING COLE
Federal Reserve Bank Building
100 North 6th Street
Philadelphia, PA 19106
Tel: 215.923.2020 Fax: 215.574.0952

STANTEC
6110 FROST PLACE
LAUREL, MD 20707
A/E INFO

APPROVED
FOR COMMANDER NAVFAC
ACTIVITY
SATISFACTORY TO DATE -/-/-
Designer JMS Author BKO Checker AKA
PM/DM
BRANCH MANAGER
CHIEF ENG/ ARCH
FIRE PROTECTION

DEPARTMENT OF THE NAVY
NAVAL FACILITIES ENGINEERING COMMAND
DoDEA
NAVAL FACILITIES ENGINEERING COMMAND ~ WASHINGTON
MARINE CORPS BASE QUANTICO, VIRGINIA
MARINE CORPS BASE QUANTICO
QUANTICO, VA

REPLACE QUANTICO M/H SCHOOL

STORM DRAIN PLAN

SCALE: 1" = 30'
PROJECT NO.: P-021
CONSTR. CONTR. NO.
W91236-15-C-0023
NAVFAC DRAWING NO.
13090818
SHEET 64 OF 789
CU102

RTA SUBMISSION - 10/13/2016

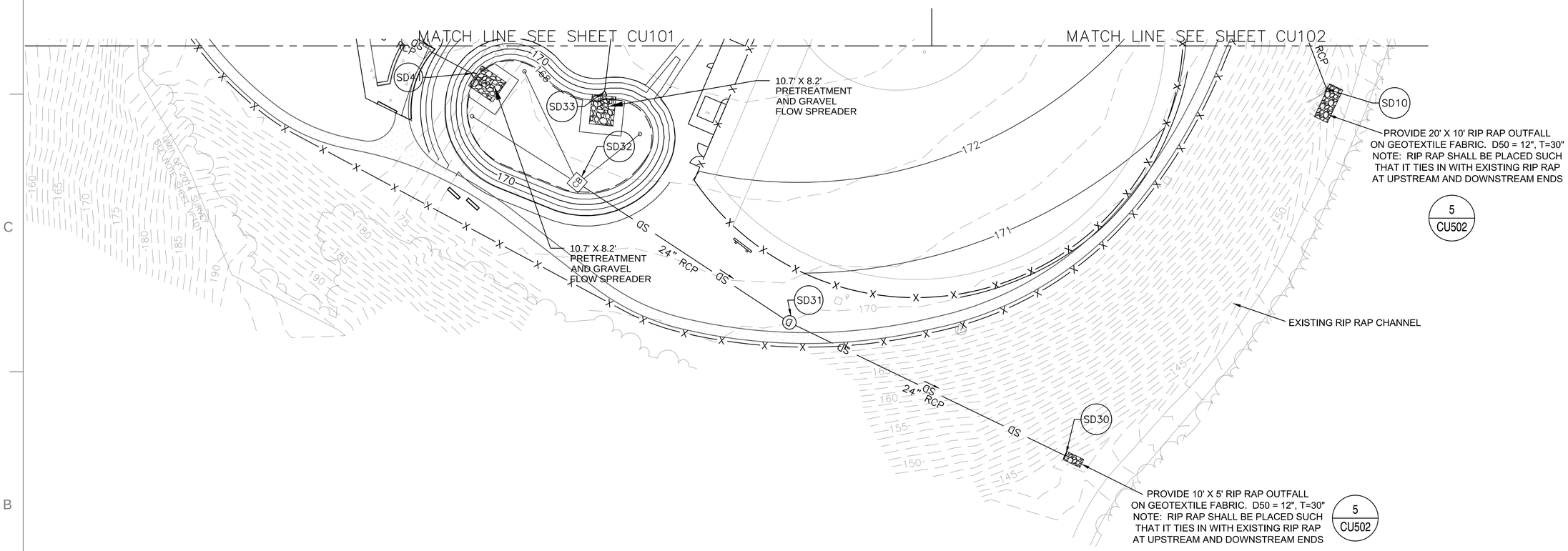

NOTES:

1. FOR STORM DRAIN STRUCTURE TABLES, SEE SHEET CU701.
2. FOR STORM DRAIN PIPE SCHEDULE, SEE SHEET CU701.
3. FOR STORM DRAIN PROFILES, SEE SHEET CU311 TO CU316.

0 30 60

SCALE: 1" = 30'

SCALE AT FULL SIZE

RTA SUBMISSION - 10/13/2016

SYM	DESCRIPTION	DATE	APPR

NAVFAC

COMMONWEALTH OF VIRGINIA
ALAN KARL ARNOLD
Lic. No. 029959
10-13-2016
PROFESSIONAL ENGINEER
SEAL

EWING COLE
Federal Reserve Bank Building
100 North 6th Street
Philadelphia, PA 19106
Tel: 215.923.2020 Fax: 215.574.0562

STANTEC
6110 FROST PLACE
LAUREL, MD 20707

A/E INFO

APPROVED

FOR COMMANDER NAVFAC
ACTIVITY

SATISFACTORY TO DATE --/--/--

Designer JMS Author BKO Checker AKA

PM/DM

BRANCH MANAGER

CHIEF ENG/ ARCH

FIRE PROTECTION

DEPARTMENT OF THE NAVY
NAVAL FACILITIES ENGINEERING COMMAND
DoDEA
NAVAL FACILITIES ENGINEERING COMMAND – WASHINGTON
MARINE CORPS BASE QUANTICO
MARINE CORPS BASE QUANTICO, VIRGINIA
QUANTICO, VA

REPLACE QUANTICO M/H SCHOOL

STORM DRAIN PLAN

SCALE: 1" = 30'

PROJECT NO.: P-021

CONSTR. CONTR. NO.
W91236-15-C-0023

NAVFAC DRAWING NO.
13090819

SHEET 65 OF 789

CU103

DRAWFORM REVISION: 10 MARCH 2009

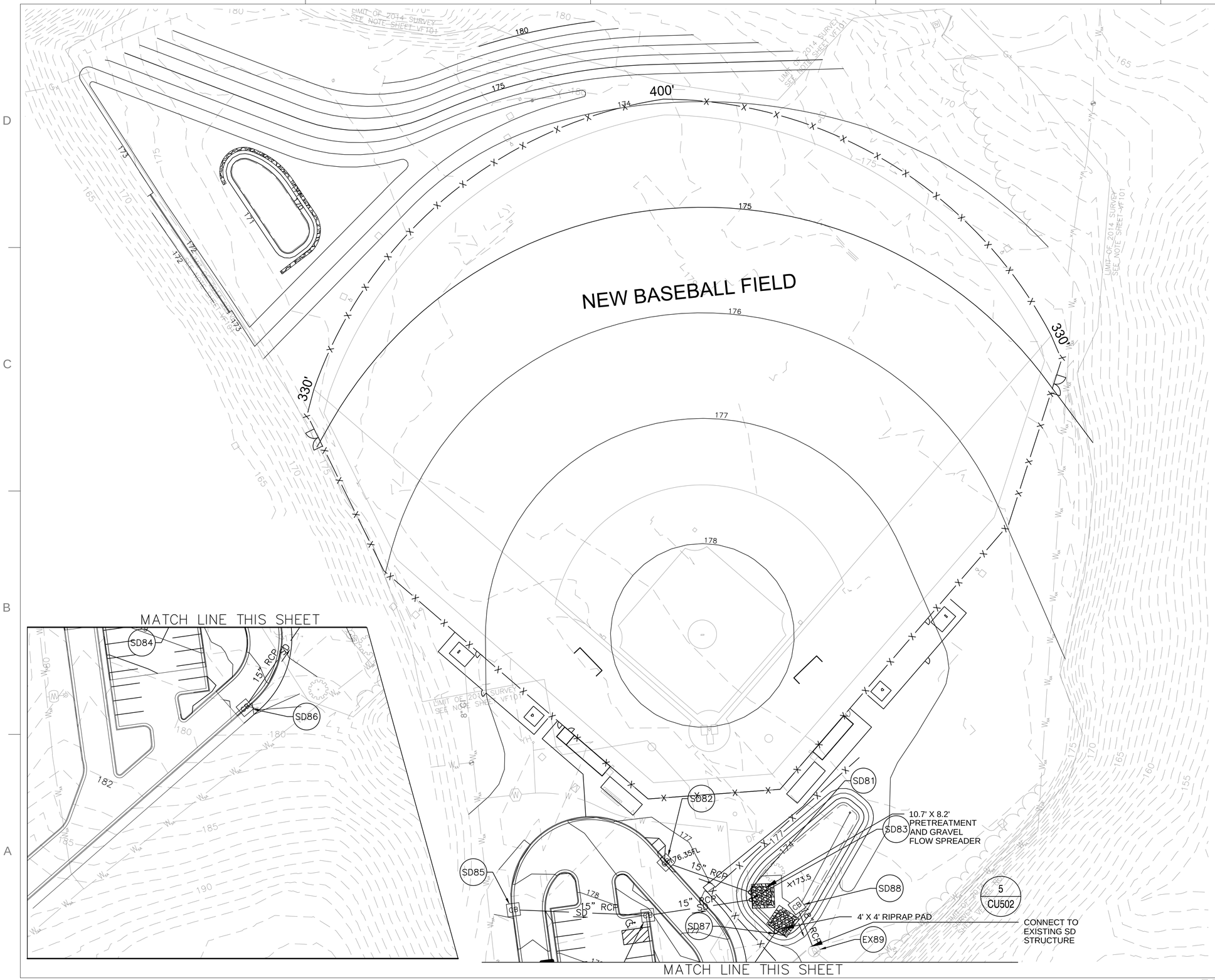

NOTES:

1. FOR STORM DRAIN STRUCTURE TABLES, SEE SHEET CU701.
2. FOR STORM DRAIN PIPE SCHEDULE, SEE SHEET CU701.
3. FOR STORM DRAIN PROFILES, SEE SHEET CU311 TO CU316.
4. SEE DETAIL 1 ON SHEET CU511 FOR CLEANOUT/OBSERVATION WELL DETAIL.
5. SEE DETAIL 2 ON SHEET CU511 FOR TYPICAL BIORETENTION SECTION.
6. SEE DETAIL 1 ON SHEET CU512 FOR PRETREATMENT AND GRAVEL FLOW SPREADER DETAILS.

0 30 60
SCALE: 1" = 30'
SCALE AT FULL SIZE

SYM	DESCRIPTION	DATE	APPR

NAVFAC

COMMONWEALTH OF VIRGINIA
ALAN KARL ARNOLD
Lic. No. 029959
10-13-2016
PROFESSIONAL ENGINEER
SEAL

EWING COLE
Federal Reserve Bank Building
100 North 6th Street
Philadelphia, PA 19106
Tel: 215.923.2020 Fax: 215.574.0952

STANTEC
6110 FROST PLACE
LAUREL, MD 20707
A/E INFO

APPROVED

FOR COMMANDER NAVFAC
ACTIVITY

SATISFACTORY TO DATE -/-/-
Designer JMS Author BKO Checker AKA
PM/DM
BRANCH MANAGER
CHIEF ENG/ ARCH
FIRE PROTECTION

DEPARTMENT OF THE NAVY
NAVAL FACILITIES ENGINEERING COMMAND
DoDEA
NAVAL FACILITIES ENGINEERING COMMAND ~ WASHINGTON
MARINE CORPS BASE QUANTICO
MARINE CORPS BASE QUANTICO, VIRGINIA
QUANTICO, VA

REPLACE QUANTICO M/H SCHOOL

STORM DRAIN PLAN

SCALE:	1" = 30'
PROJECT NO.:	P-021
CONSTR. CONTR. NO.	W91236-15-C-0023
NAVFAC DRAWING NO.	13090820
SHEET	66 OF 789
	CU104

DRAWFORM REVISION 10 MARCH 2009

RTA SUBMISSION - 10/13/2016

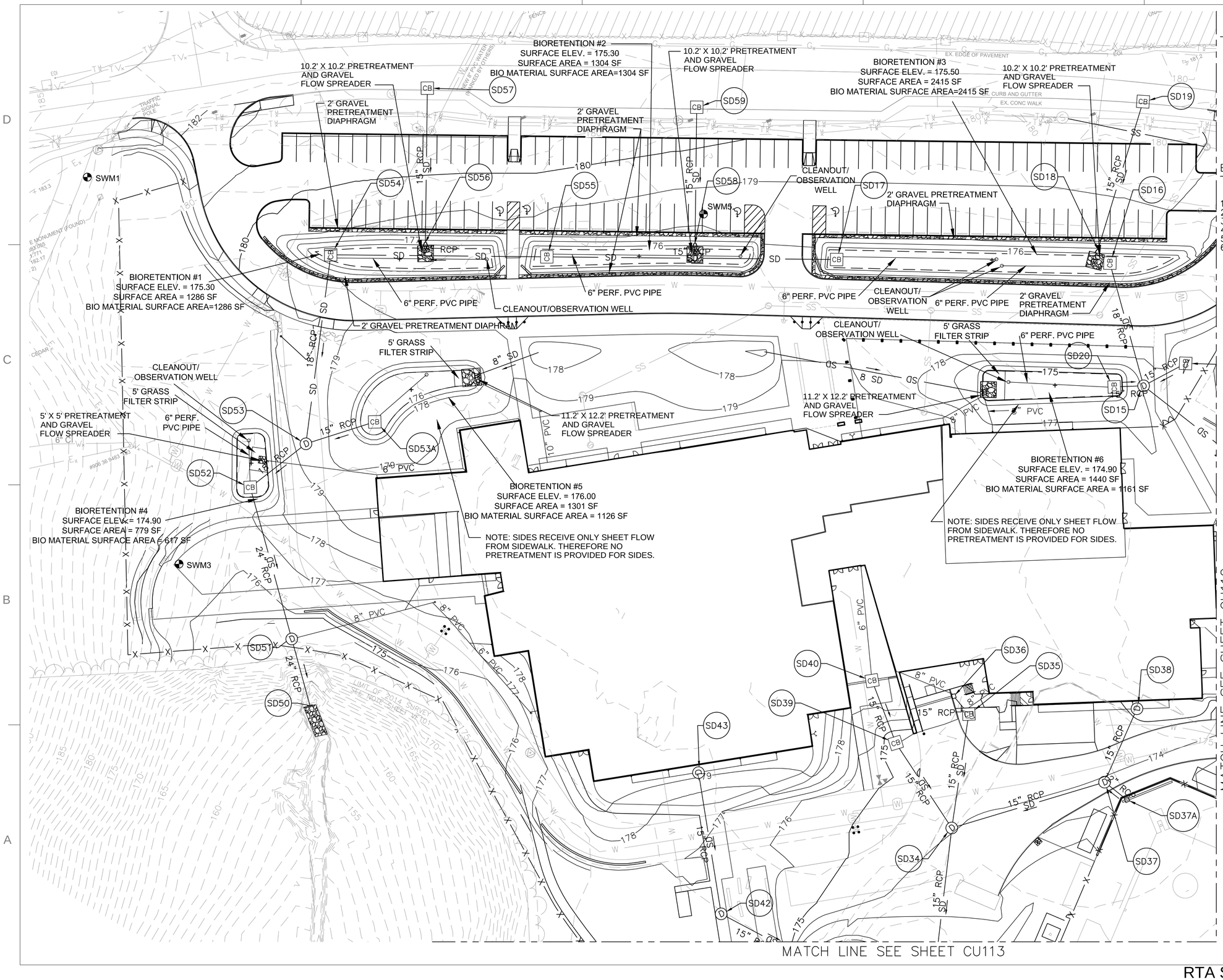

GENERAL NOTES:

1. SEE DETAIL 1 ON SHEET CU511 FOR CLEANOUT/OBSERVATION WELL DETAIL.
2. SEE DETAIL 2 ON SHEET CU511 FOR TYPICAL BIORETENTION SECTION.
3. SEE DETAIL 3 ON SHEET CU511 FOR TYPICAL GRAVEL PRETREATMENT DIAPHRAGM SECTION.
4. SEE DETAIL 1 ON SHEET CU512 FOR PRETREATMENT AND GRAVEL FLOW SPREADER DETAILS.

BMP GEOGRAPHIC COORDINATES:

	N	E
1.	14002144.36	972174.57
2.	14002088.51	972317.47
3.	14002001.62	972526.18
4.	14002058.71	972037.67
5.	14001961.72	972254.97
6.	14001912.18	9722533.41

SCALE: 1" = 30'

SCALE AT FULL SIZE

NAVFAC

COMMONWEALTH OF VIRGINIA
ALAN KARL ARNOLD
Lic. No. 029959
10-13-2016
PROFESSIONAL ENGINEER
SEAL

EWING COLE
Federal Reserve Bank Building
100 North 6th Street
Philadelphia, PA 19106
Tel: 215.923.2020 Fax: 215.574.0562

STANTEC
6110 FROST PLACE
LAUREL, MD 20707

A/E INFO

APPROVED

FOR COMMANDER NAVFAC
ACTIVITY

SATISFACTORY TO DATE

Designer JMS Author BKO Checker AKA

PM/DM

BRANCH MANAGER

CHIEF ENGI ARCH

FIRE PROTECTION

DEPARTMENT OF THE NAVY
NAVAL FACILITIES ENGINEERING COMMAND
DoDEA
NAVAL FACILITIES ENGINEERING COMMAND – WASHINGTON
MARINE CORPS BASE QUANTICO, VIRGINIA
MARINE CORPS BASE QUANTICO
QUANTICO, VA

REPLACE QUANTICO M/H SCHOOL

STORMWATER MANAGEMENT PLAN

SCALE: 1" = 30'
PROJECT NO.: P-021
CONSTR. CONTR. NO. W91236-15-C-0023
NAVFAC DRAWING NO. 13090821
SHEET 67 OF 789
CU111

DRAWFORM REVISION: 10 MARCH 2009

RTA SUBMISSION - 10/13/2016

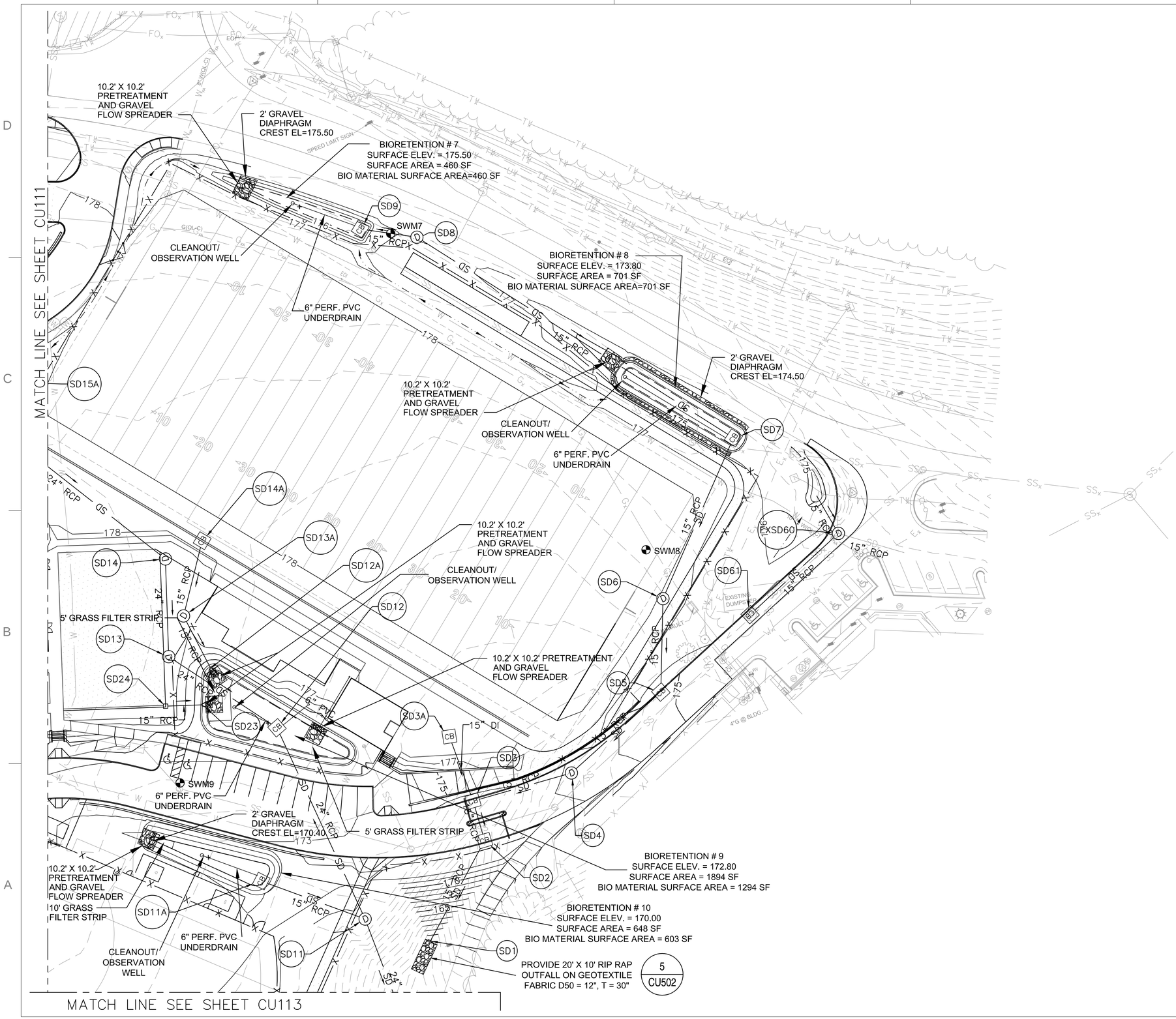

GENERAL NOTES:

1. SEE SHEET CU511 FOR CLEANOUT/OBSERVATION WELL DETAIL.
2. SEE DETAIL 2 ON SHEET CU511 FOR TYPICAL BIORETENTION SECTION.
3. SEE DETAIL 3 ON SHEET CU511 FOR TYPICAL GRAVEL PRETREATMENT DIAPHRAGM SECTION.
4. SEE DETAIL 1 ON SHEET CU512 FOR PRETREATMENT AND GRAVEL FLOW SPREADER DETAILS.

BMP GEOGRAPHIC COORDINATES:

	N	E
7.	14001928.16	972816.27
8.	14001727.24	972986.76
9.	14001644.72	972681.03
10	14001582.68	972616.83

0 30 60

SCALE: 1" = 30'

SCALE AT FULL SIZE

SYM	DESCRIPTION	DATE	APPR

NAVFAC

COMMONWEALTH OF VIRGINIA
ALAN KARL ARNOLD
Lic. No. 029959
10-13-2016
PROFESSIONAL ENGINEER
SEAL

EWING COLE
Federal Reserve Bank Building
100 North 6th Street
Philadelphia, PA 19106
Tel: 215.923.2020 Fax: 215.574.0582

STANTEC
6110 FROST PLACE
LAUREL, MD 20707
A/E INFO

APPROVED

FOR COMMANDER NAVFAC
ACTIVITY

SATISFACTORY TO DATE --/--/--

Designer JMS Author BKO Checker AKA

PM/DM

BRANCH MANAGER

CHIEF ENG/ ARCH

FIRE PROTECTION

DEPARTMENT OF THE NAVY
NAVAL FACILITIES ENGINEERING COMMAND
DoDEA

NAVAL FACILITIES ENGINEERING COMMAND ~ WASHINGTON
MARINE CORPS BASE QUANTICO, VIRGINIA

MARINE CORPS BASE QUANTICO
QUANTICO, VA

REPLACE QUANTICO M/H SCHOOL

STORMWATER MANAGEMENT PLAN

SCALE: 1" = 30'

PROJECT NO.: P-021

CONSTR. CONTR. NO.
W91236-15-C-0023

NAVFAC DRAWING NO.
13090822

SHEET 68 OF 789

CU112

DRAWFORM REVISION: 10 MARCH 2009

RTA SUBMISSION - 10/13/2016

GENERAL NOTES:

1. SEE SHEET CU511 FOR CLEANOUT/OBSERVATION WELL DETAIL.
2. SEE DETAIL 2 ON SHEET CU511 FOR TYPICAL BIORETENTION SECTION.
3. SEE DETAIL 1 ON SHEET CU512 FOR PRETREATMENT AND GRAVEL FLOW SPREADER DETAILS.

BMP GEOGRAPHIC COORDINATES:

	N	E
11.	14001578.89	972281.30

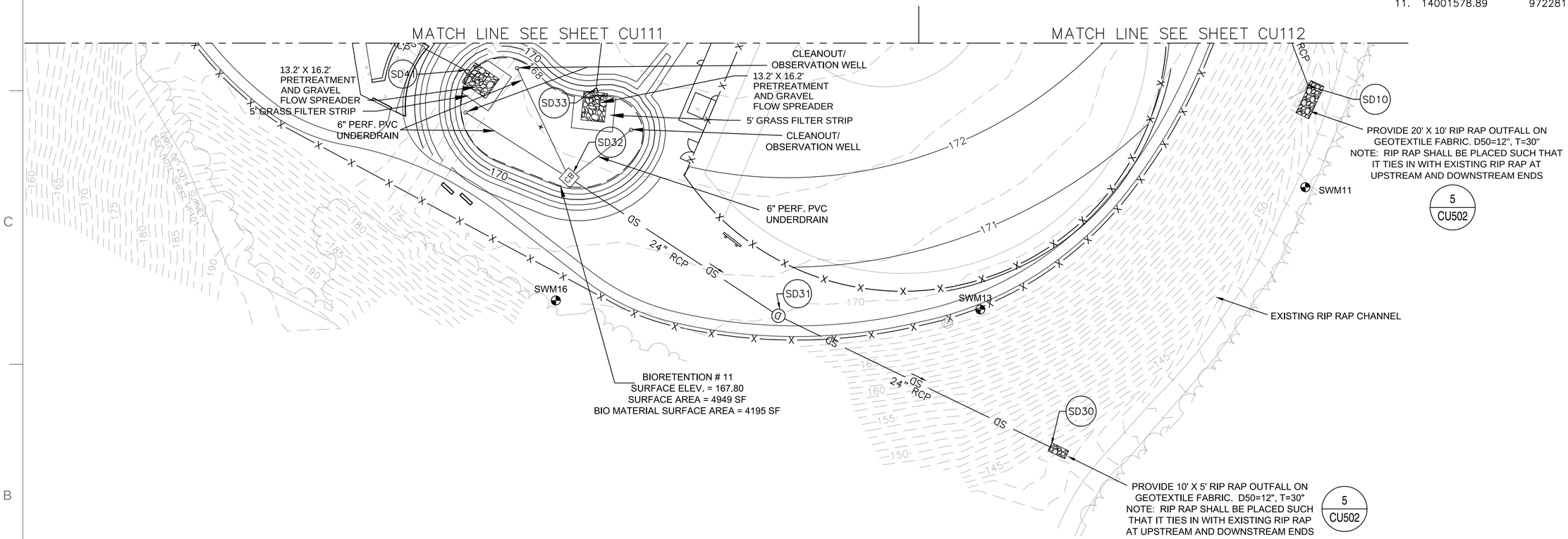

0 30 60
SCALE: 1" = 30'
SCALE AT FULL SIZE

RTA SUBMISSION - 10/13/2016

NAVFAC

COMMONWEALTH OF VIRGINIA
ALAN KARL ARNOLD
Lic. No. 029959
10-13-2016
PROFESSIONAL ENGINEER
SEAL

EWING COLE
Federal Reserve Bank Building
100 North 6th Street
Philadelphia, PA 19106
Tel: 215.923.2020 Fax: 215.574.0562

STANTEC
6110 FROST PLACE
LAUREL, MD 20707
A/E INFO

APPROVED
FOR COMMANDER NAVFAC
ACTIVITY
SATISFACTORY TO DATE
Designer JMS Author BKO Checker AKA
PM/DM
BRANCH MANAGER
CHIEF ENG/ ARCH
FIRE PROTECTION

DEPARTMENT OF THE NAVY
NAVAL FACILITIES ENGINEERING COMMAND
DoDEA
NAVAL FACILITIES ENGINEERING COMMAND ~ WASHINGTON
MARINE CORPS BASE QUANTICO, VIRGINIA
MARINE CORPS BASE QUANTICO
QUANTICO, VA
REPLACE QUANTICO M/H SCHOOL
STORMWATER MANAGEMENT PLAN

SCALE: 1" = 30'
PROJECT NO.: P-021
CONSTR. CONTR. NO. W91236-15-C-0023
NAVFAC DRAWING NO. 13090823
SHEET 69 OF 789
CU113

DRAWFORM REVISION: 10 MARCH 2009

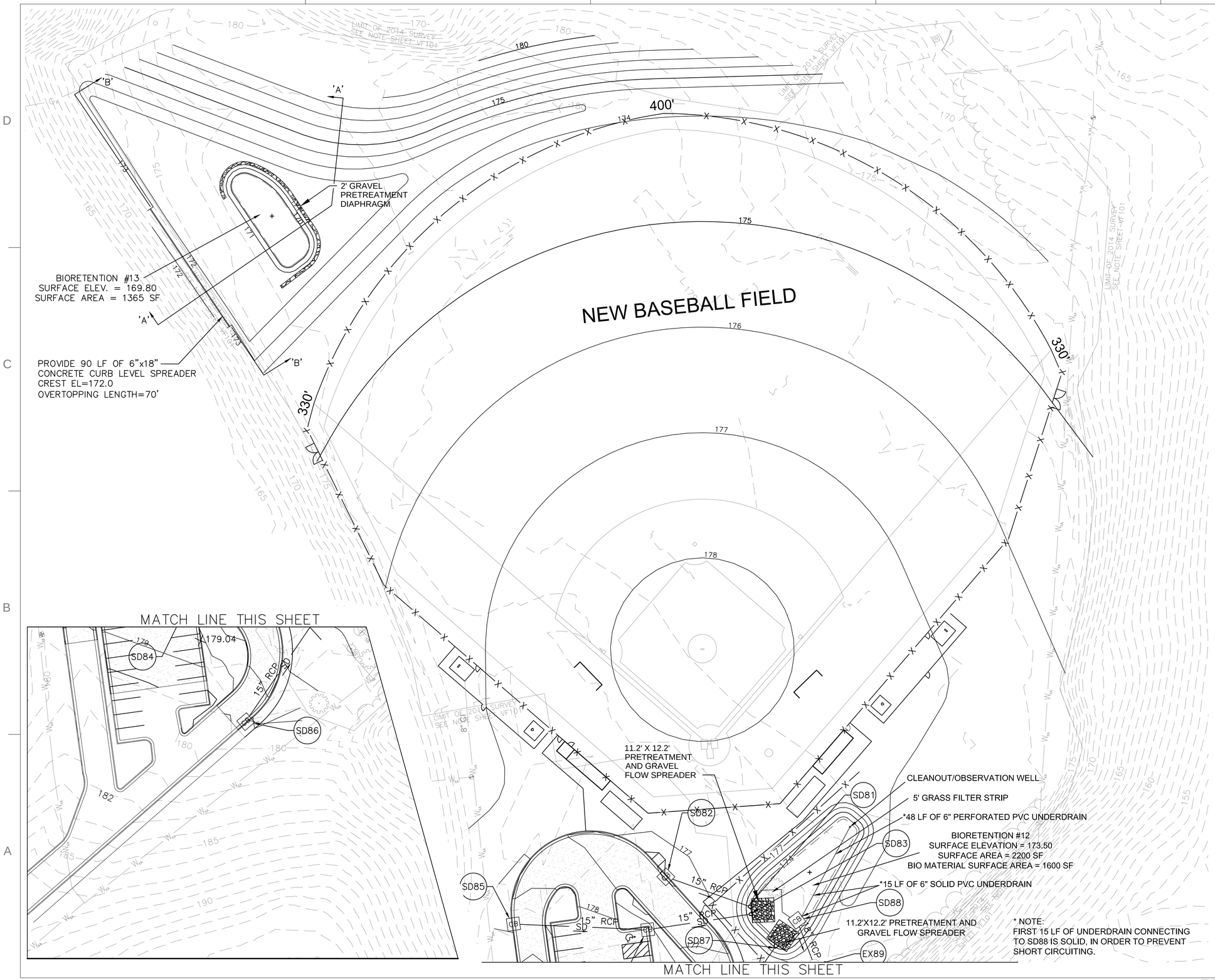

GENERAL NOTES:

1. SEE DETAIL 1 ON SHEET CU511 FOR CLEANOUT/OBSERVATION WELL DETAIL.
2. SEE DETAIL 2 ON SHEET CU511 FOR TYPICAL BIORETENTION SECTION.
3. SEE DETAIL 1 ON SHEET CU512 FOR PRETREATMENT AND GRAVEL FLOW SPREADER DETAILS.

BMP GEOGRAPHIC COORDINATES:

	N	E
12.	14002350.61	973333.19
13.	14002861.96	973173.83

0 30 60
SCALE: 1" = 30'
SCALE AT FULL SIZE

SYM	DESCRIPTION	DATE	APPR

NAVFAC

COMMONWEALTH OF VIRGINIA
ALAN KARL ARNOLD
Lic. No. 029959
10-13-2016
PROFESSIONAL ENGINEER
SEAL

EWING COLE
Federal Reserve Bank Building
100 North 6th Street
Philadelphia, PA 19106
Tel: 215.923.2020 Fax: 215.574.0562

STANTEC
6110 FROST PLACE
LAUREL, MD 20707
A/E INFO

APPROVED

FOR COMMANDER NAVFAC
ACTIVITY

SATISFACTORY TO DATE -/-/-
Designer JMS Author BKO Checker AKA
PM/DM
BRANCH MANAGER
CHIEF ENGI ARCH
FIRE PROTECTION

DEPARTMENT OF THE NAVY
NAVAL FACILITIES ENGINEERING COMMAND
DoDEA
NAVAL FACILITIES ENGINEERING COMMAND – WASHINGTON
MARINE CORPS BASE QUANTICO, VIRGINIA
MARINE CORPS BASE QUANTICO
QUANTICO, VA

REPLACE QUANTICO M/H SCHOOL

STORMWATER MANAGEMENT PLAN

SCALE:	1" = 30'
PROJECT NO.:	P-021
CONSTR. CONTR. NO.	W91236-15-C-0023
NAVFAC DRAWING NO.	13090824
SHEET	70 OF 789
	CU114

DRAWFORM REVISION: 10 MARCH 2009

RTA SUBMISSION - 10/13/2016

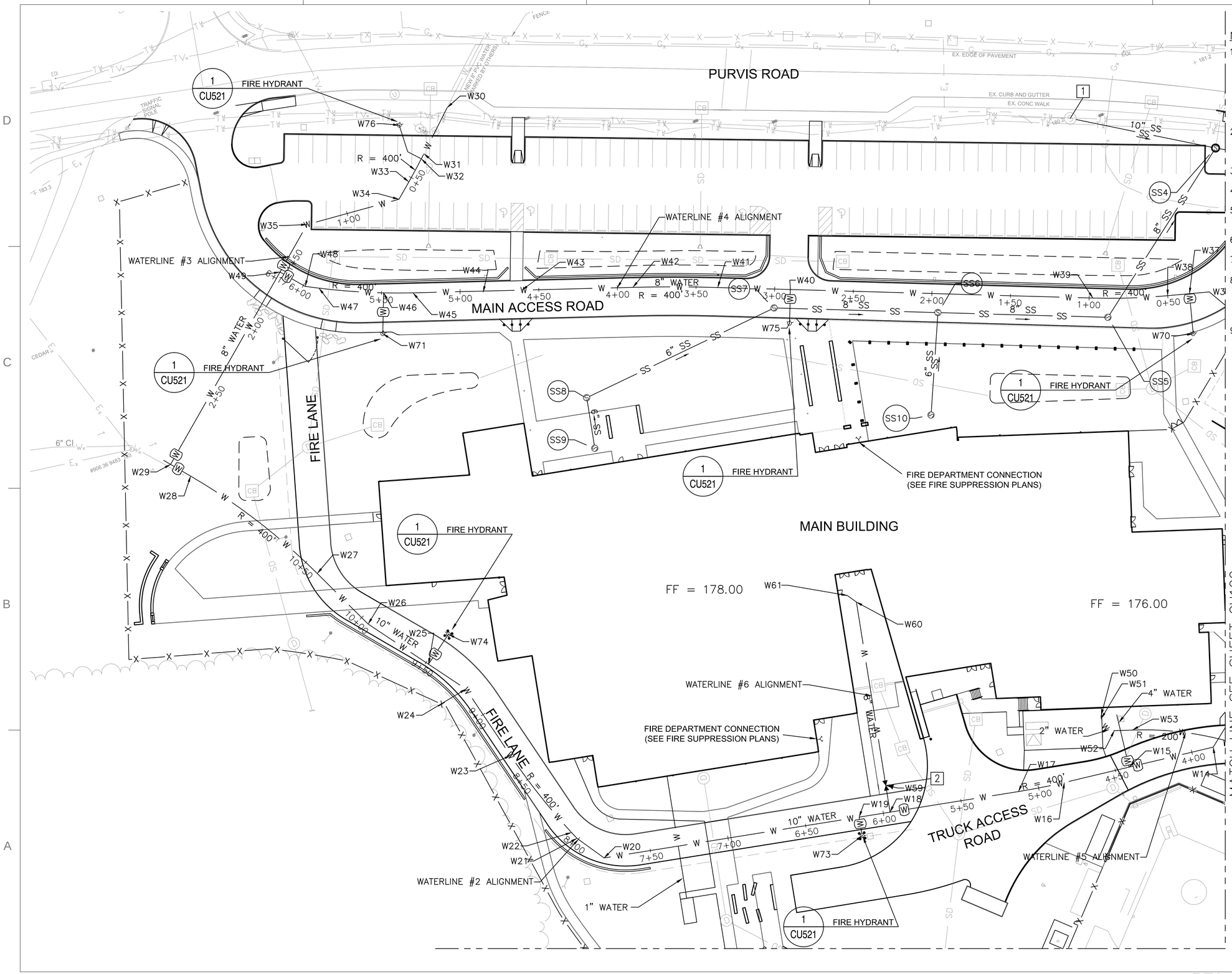

NOTES

1. SITE WATER AND SANITARY SEWER SHALL BE CONSTRUCTED AND TESTED ACCORDING TO THE STANDARDS AND SPECIFICATIONS OF THE PRINCE WILLIAM COUNTY SERVICE AUTHORITY (PWCSA) AS DETAILED IN: "WATER AND SEWER UTILITY STANDARDS MANUAL", PWCSA 2012.
2. ALL WATER LINE BENDS AND TEES SHALL BE RESTRAINED. FOR THRUST BLOCK DETAILS SEE SHEET CU521 DETAIL 2.
3. PROVIDE VALVE BOXES ON WATER LINE VALVES. SEE SHEET CU521 DETAIL 3.
4. FOR WATER LINE POINT TABLES, SEE SHEET CU721.
5. FOR PRECAST SANITARY SEWER MANHOLE DETAIL, SEE SHEET CU525 DETAIL 1.
6. FOR SANITARY SEWER CLEANOUT DETAIL, SEE SHEET CU525 DETAIL 3.
7. FOR SANITARY SEWER STRUCTURE AND PIPE TABLES, SEE SHEET CU721.
8. ALL DOMESTIC WATER LINES 4" OR GREATER IN DIAMETER SHALL BE PVC C900 CLASS 150. ALL WATER LINES LESS THAN 4" IN DIAMETER SHALL BE COPPER TUBING. SEE SPECIFICATIONS.
9. ALL SANITARY SEWER PIPE IS PVC SDR 35 SEE SPECIFICATIONS.

KEY NOTES

1 PRIOR TO CONSTRUCTION OF THE NEW SEWER LINE, CONTRACTOR MUST FIELD LOCATE EXISTING SEWER MANHOLE AND VERIFY INVERT OF EXISTING MANHOLE IS HIGH ENOUGH TO TIE THE SEWER FROM THIS MANHOLE TO MANHOLE SS4 AT MINIMUM 0.5% SLOPE. IF THE DESIGN PARAMETERS CANNOT BE MET, CONTRACTOR MUST CONTACT CONTRACTING OFFICER FOR GUIDANCE.

2 PROVIDE POST INDICATOR VALVE. SEE SHEET CU521 DETAIL 5.

NAVFAC

COMMONWEALTH OF VIRGINIA
ALAN KARL ARNOLD
Lic. No. 029959
10-13-2016
PROFESSIONAL ENGINEER
SEAL

EWING COLE
Federal Reserve Bank Building
100 North 6th Street
Philadelphia, PA 19106
Tel: 215.923.2020 Fax: 215.574.0562

STANTEC
6110 FROST PLACE
LAUREL, MD 20707
A/E INFO

APPROVED

FOR COMMANDER NAVFAC
ACTIVITY

SATISFACTORY TO DATE -/-/-/-
Designer JMS Author BKO Checker AKA
PM/DM
BRANCH MANAGER
CHIEF ENG/ ARCH
FIRE PROTECTION

DEPARTMENT OF THE NAVY
NAVAL FACILITIES ENGINEERING COMMAND – WASHINGTON
DoDEA
NAVAL FACILITIES ENGINEERING COMMAND
MARINE CORPS BASE QUANTICO, VIRGINIA
MARINE CORPS BASE QUANTICO
QUANTICO, VA

REPLACE QUANTICO M/H SCHOOL

WATER & SEWER PLAN

SCALE: 1" = 30'
PROJECT NO.: P-021
CONSTR. CONTR. NO.
W91236-15-C-0023
NAVFAC DRAWING NO.
13090825
SHEET 71 OF 789
CU121

DRAWFORM REVISION: 10 MARCH 2009

RTA SUBMISSION - 10/13/2016

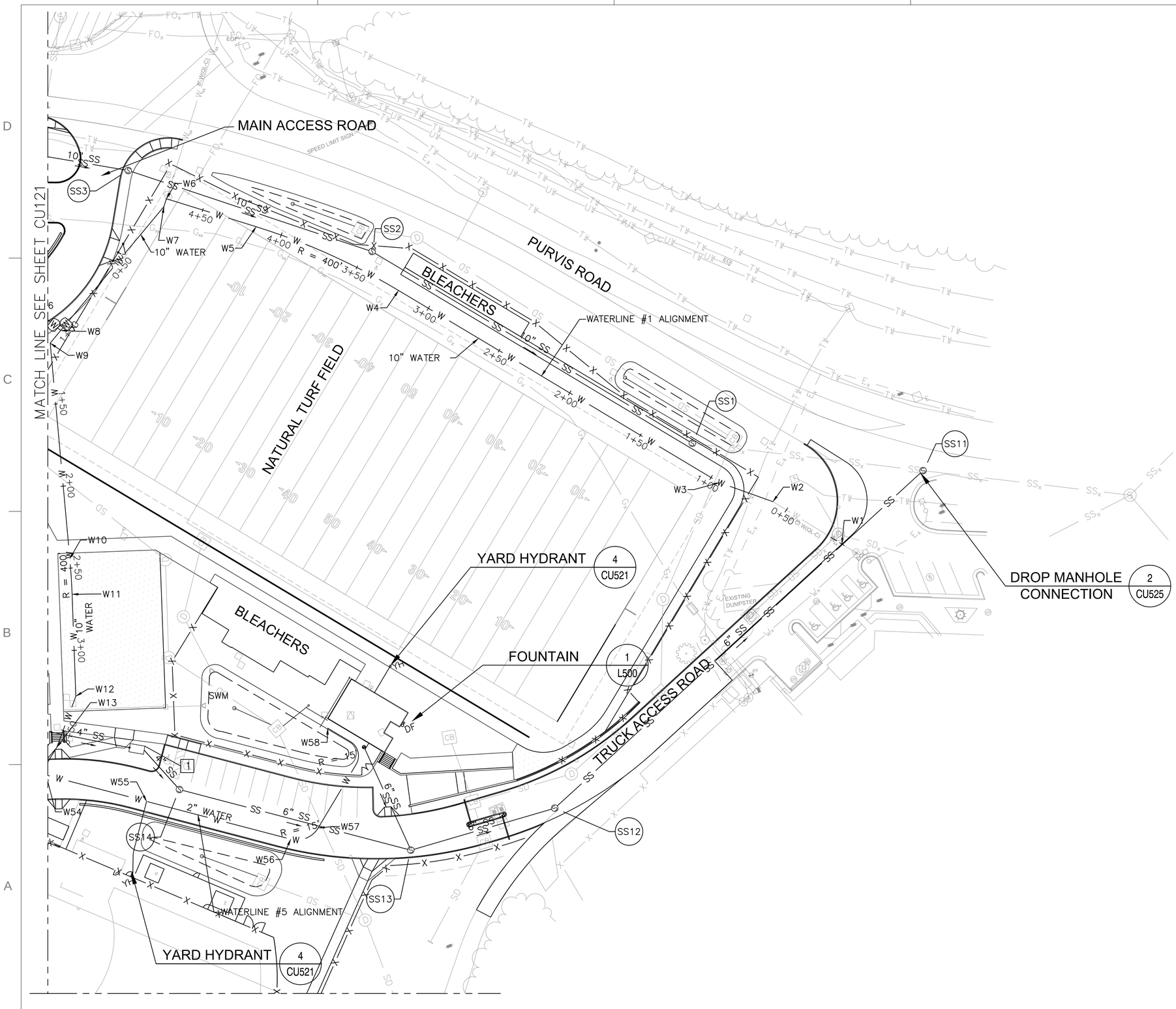

NOTES

1. SITE WATER AND SANITARY SEWER SHALL BE CONSTRUCTED AND TESTED ACCORDING TO THE STANDARDS AND SPECIFICATIONS OF THE PRINCE WILLIAM COUNTY SERVICE AUTHORITY (PWCSA) AS DETAILED IN: "WATER AND SEWER UTILITY STANDARDS MANUAL", PWCSA 2012.
2. ALL WATER LINE BENDS AND TEES SHALL BE RESTRAINED. FOR THRUST BLOCK DETAILS SEE SHEET CU521 DETAIL 2.
3. PROVIDE VALVE BOXES ON WATER LINE VALVES. SEE SHEET CU521 DETAIL 3.
4. FOR WATER LINE POINT TABLES, SEE SHEET CU721.
5. FOR PRECAST SANITARY SEWER MANHOLE DETAIL, SEE SHEET CU525 DETAIL 1.
6. FOR SANITARY SEWER CLEANOUT DETAIL, SEE SHEET CU525 DETAIL 3.
7. FOR SANITARY SEWER STRUCTURE AND PIPE TABLES, SEE SHEET CU721.
8. ALL DOMESTIC WATER LINES 4" OR GREATER IN DIAMETER SHALL BE PVC C900 CLASS 150. ALL WATER LINES LESS THAN 4" IN DIAMETER SHALL BE COPPER TUBING. SEE SPECIFICATIONS.
9. ALL SANITARY SEWER PIPE SHALL BE PVC SDR 35.

KEY NOTES

1 GREASE TRAP. SEE PLUMBING PLANS. SHEET P504.

0 30 60

SCALE: 1" = 30'

SCALE AT FULL SIZE

RTA SUBMISSION - 10/13/2016

SYM	DESCRIPTION	DATE	APPR

NAVFAC

COMMONWEALTH OF VIRGINIA
ALAN KARL ARNOLD
Lic. No. 029959
10-13-2016
PROFESSIONAL ENGINEER
SEAL

EWING COLE
Federal Reserve Bank Building
100 North 6th Street
Philadelphia, PA 19106
Tel: 215.923.2020 Fax: 215.574.0562

STANTEC
6110 FROST PLACE
LAUREL, MD 20707
A/E INFO

APPROVED

FOR COMMANDER NAVFAC
ACTIVITY

SATISFACTORY TO DATE --/--/--

Designer JMS Author BKO Checker AKA

PM/DM

BRANCH MANAGER

CHIEF ENG/ ARCH

FIRE PROTECTION

DEPARTMENT OF THE NAVY
NAVAL FACILITIES ENGINEERING COMMAND
DoDEA
NAVAL FACILITIES ENGINEERING COMMAND ~ WASHINGTON
MARINE CORPS BASE QUANTICO
MARINE CORPS BASE QUANTICO, VIRGINIA
QUANTICO, VA

REPLACE QUANTICO M/H SCHOOL

WATER & SEWER PLAN

SCALE: 1" = 30'

PROJECT NO.: P-021

CONSTR. CONTR. NO.
W91236-15-C-0023

NAVFAC DRAWING NO.
13090826

SHEET 72 OF 789

CU122

DRAWFORM REVISION 10 MARCH 2009

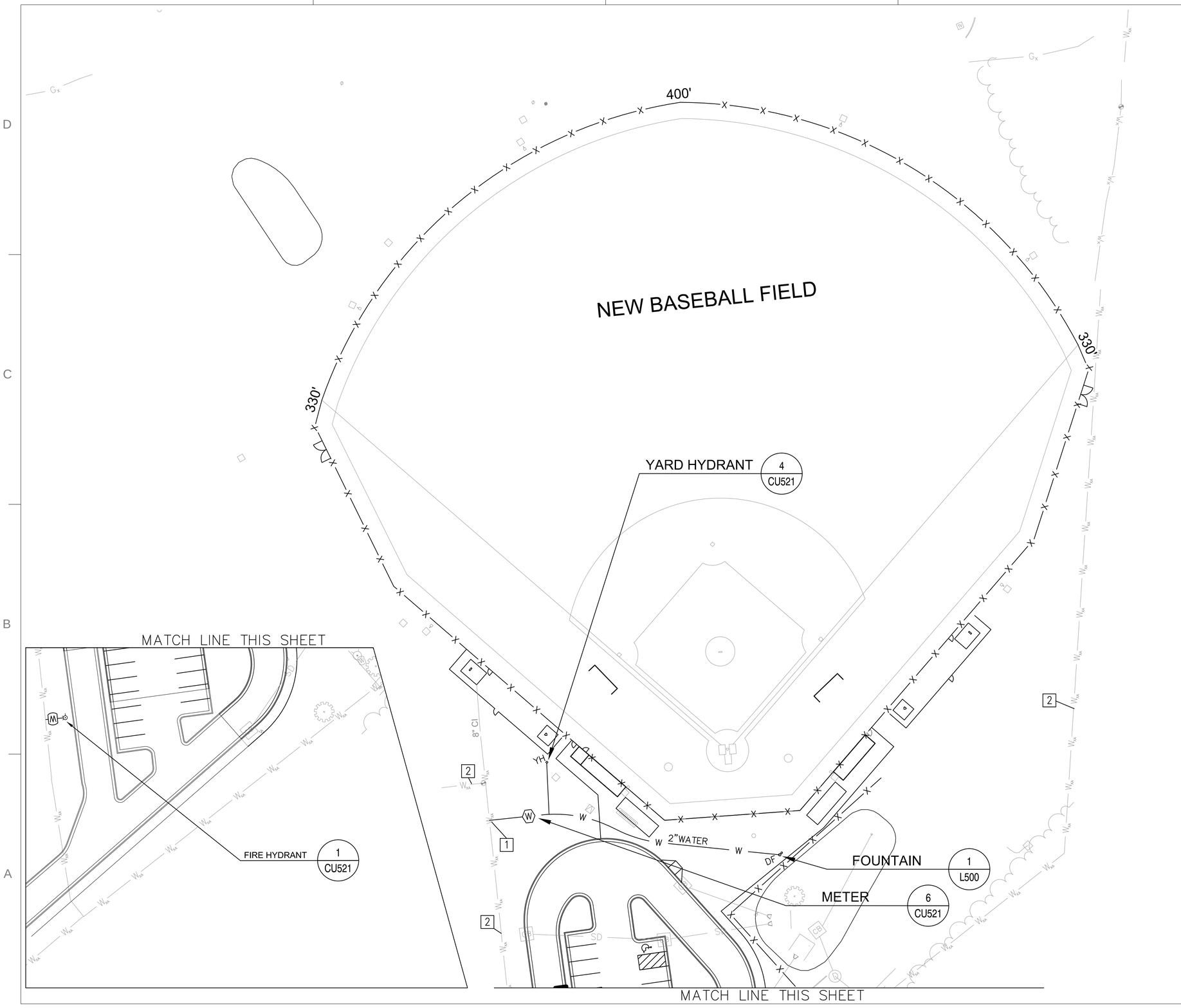

NOTES

1. SITE WATER AND SANITARY SEWER SHALL BE CONSTRUCTED AND TESTED ACCORDING TO THE STANDARDS AND SPECIFICATIONS OF THE PRINCE WILLIAM COUNTY SERVICE AUTHORITY (PWCSA) AS DETAILED IN: "WATER AND SEWER UTILITY STANDARDS MANUAL", PWCSA 2012.
2. ALL WATER LINE BENDS AND TEES SHALL BE RESTRAINED. FOR THRUST BLOCK DETAILS SEE SHEET CU521 DETAIL 2.
3. PROVIDE VALVE BOXES ON WATER LINE VALVES. SEE SHEET CU521 DETAIL 3.
4. FOR WATER LINE POINT TABLES, SEE SHEET CU721.
8. ALL DOMESTIC WATER LINES 4" OR GREATER IN DIAMETER SHALL BE PVC C900 CLASS 150. ALL WATER LINES LESS THAN 4" IN DIAMETER SHALL BE COPPER TUBING. SEE SPECIFICATIONS.

KEY NOTES

1 CONNECT WATER SUPPLY LINE FOR YARD HYADRANT AND DRINKING FOUNTAIN TO EXISTING WATER LINE.

2 MAINTAIN EXISTING WATER SERVICE THROUGH SITE

0 30 60
SCALE: 1" = 30'
SCALE AT FULL SIZE

SYM	DESCRIPTION	DATE	APPR

NAVFAC

COMMONWEALTH OF VIRGINIA
ALAN KARL ARNOLD
Lic. No. 029959
10-13-2016
PROFESSIONAL ENGINEER
SEAL

EWING COLE
Federal Reserve Bank Building
100 North 6th Street
Philadelphia, PA 19106
Tel: 215.923.2020 Fax: 215.574.0562

STANTEC
6110 FROST PLACE
LAUREL, MD 20707

A/E INFO

APPROVED

FOR COMMANDER NAVFAC
ACTIVITY

SATISFACTORY TO DATE -/-/-/-

Designer JMS Author BKO Checker AKA

PM/DM

BRANCH MANAGER

CHIEF ENG/ ARCH

FIRE PROTECTION

DEPARTMENT OF THE NAVY
NAVAL FACILITIES ENGINEERING COMMAND
DoDEA
NAVAL FACILITIES ENGINEERING COMMAND – WASHINGTON
MARINE CORPS BASE QUANTICO
MARINE CORPS BASE QUANTICO, VIRGINIA
QUANTICO, VA

REPLACE QUANTICO M/H SCHOOL

WATER & SEWER PLAN

SCALE:	1" = 30'
PROJECT NO.:	P-021
CONSTR. CONTR. NO.	W91236-15-C-0023
NAVFAC DRAWING NO.	13090827
SHEET	73 OF 789
	CU124

DRAWFORM REVISION: 10 MARCH 2009

RTA SUBMISSION - 10/13/2016

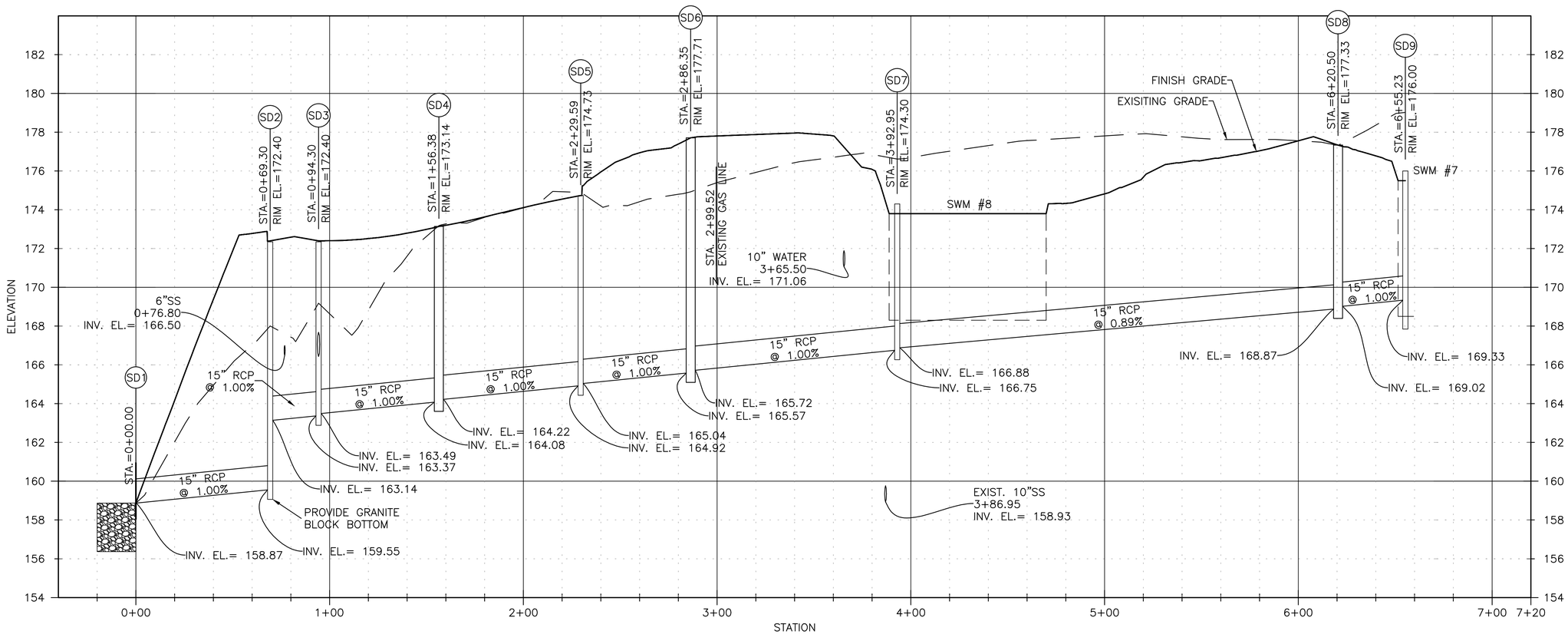

SD1 – SD9
HORZ. SCALE 1:30
VERT. SCALE 1:3

NOTE: HGL IS BELOW TOP OF PIPES FOR THIS PROFILE.

NAVFAC

COMMONWEALTH OF VIRGINIA
ALAN KARL ARNOLD
Lic. No. 029939
10-13-2016
PROFESSIONAL ENGINEER
SEAL

EWING COLE
Federal Reserve Bank Building
100 North 6th Street
Philadelphia, PA 19106
Tel: 215.923.2020 Fax: 215.574.0562

STANTEC
6110 FROST PLACE
LAUREL, MD 20707
A/E INFO

APPROVED
FOR COMMANDER NAVFAC ACTIVITY
SATISFACTORY TO DATE
Designer JMS Author BKO Checker AKA
PM/DM
BRANCH MANAGER
CHIEF ENG/ ARCH
FIRE PROTECTION

DEPARTMENT OF THE NAVY
NAVAL FACILITIES ENGINEERING COMMAND
DoDEA
NAVAL FACILITIES ENGINEERING COMMAND ~ WASHINGTON
MARINE CORPS BASE QUANTICO, VIRGINIA
MARINE CORPS BASE QUANTICO
QUANTICO, VA
REPLACE QUANTICO M/H SCHOOL
STORM DRAIN PROFILES

SCALE: 1" = 30'
PROJECT NO.: P-021
CONSTR. CONTR. NO. W91236-15-C-0023
NAVFAC DRAWING NO. 13090828
SHEET 74 OF 789
CU311

RTA SUBMISSION - 10/13/2016

NOTE: HGL IS BELOW TOP OF PIPES FOR ALL PROFILES THIS SHEET.

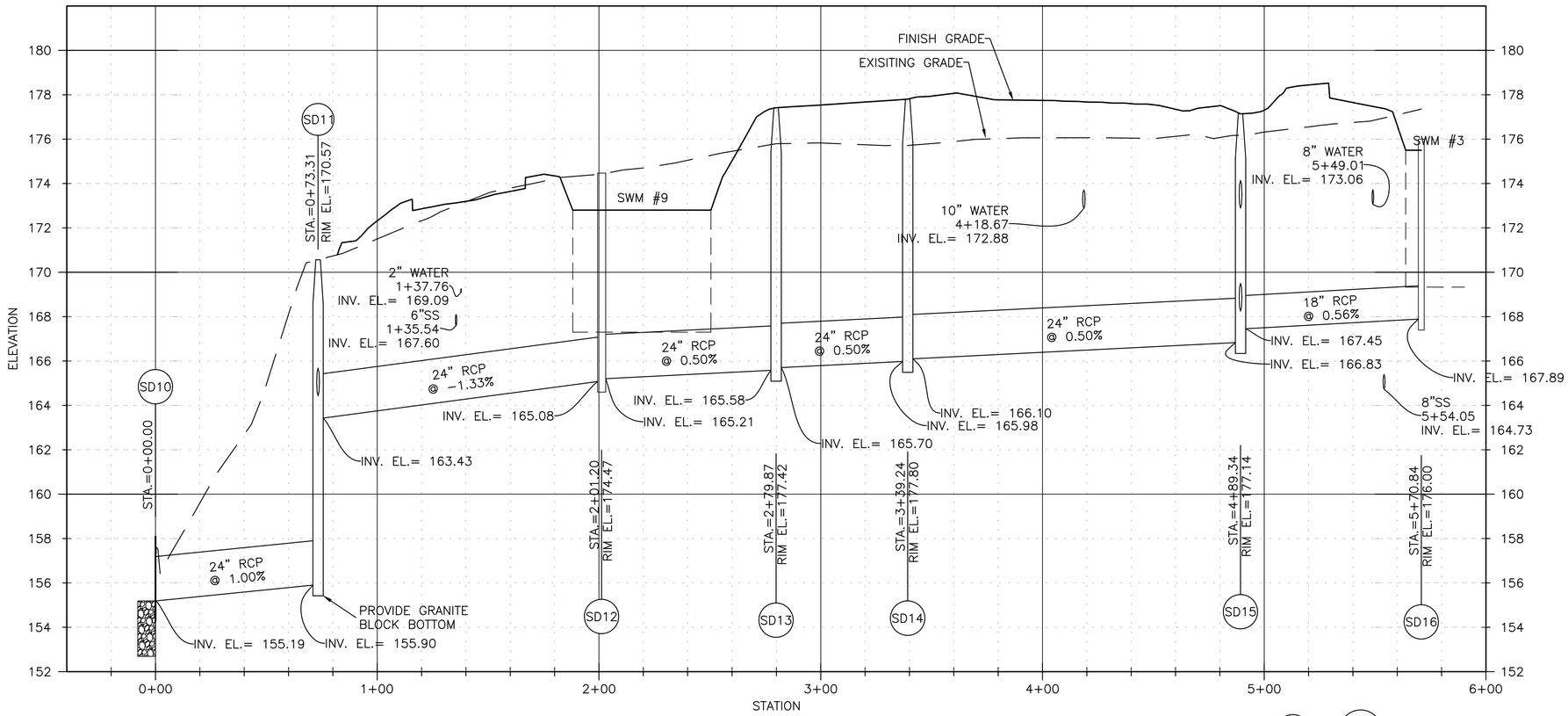

SD12 – SD17
HORZ. SCALE 1:30
VERT. SCALE 1:3

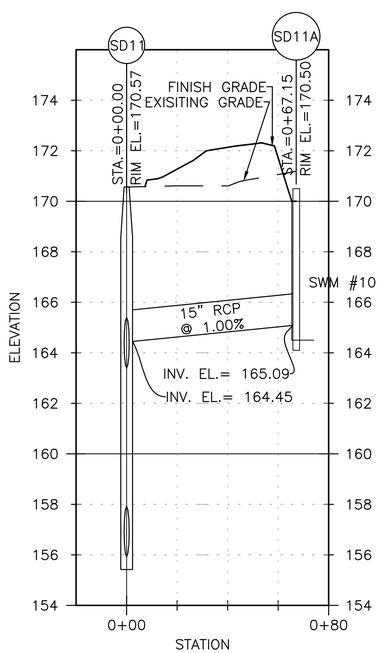

SD11– SD11A
HORZ. SCALE 1:30
VERT. SCALE 1:3

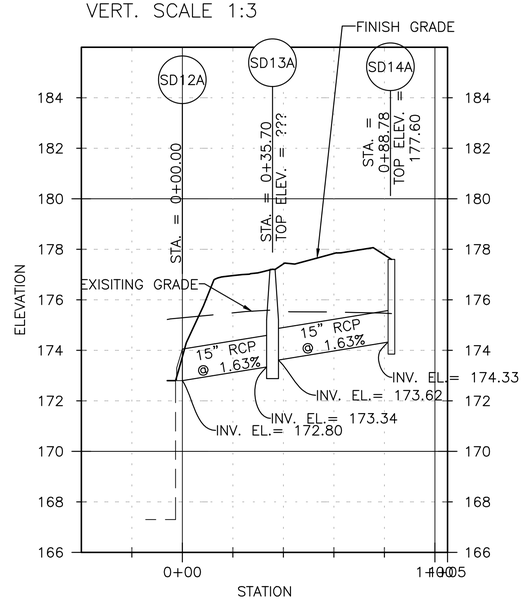

SD12 – SD14A
HORZ. SCALE 1:30
VERT. SCALE 1:3

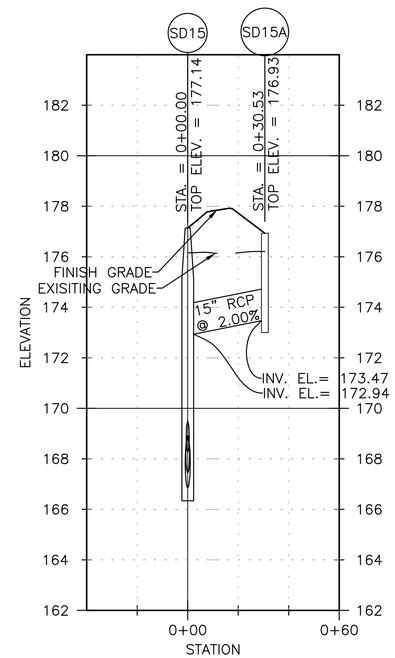

SD 15–15A
HORZ. SCALE 1:30
VERT. SCALE 1:3

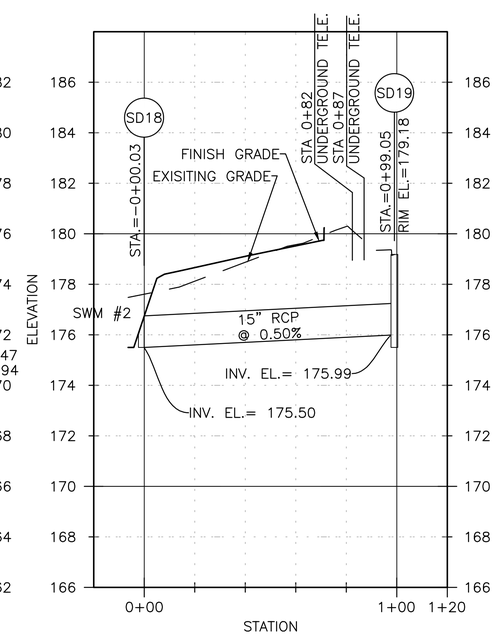

SD18–19
HORZ. SCALE 1:30
VERT. SCALE 1:3

NAVFAC

COMMONWEALTH OF VIRGINIA
ALAN KARL ARNOLD
Lic. No. 029959
10-13-2016
PROFESSIONAL ENGINEER
SEAL

EWING COLE
Federal Reserve Bank Building
100 North 6th Street
Philadelphia, PA 19106
Tel: 215.923.2020 Fax: 215.574.0562

STANTEC
6110 FROST PLACE
LAUREL, MD 20707
A/E INFO

APPROVED

FOR COMMANDER NAVFAC
ACTIVITY

SATISFACTORY TO DATE –/–/–
Designer JMS Author BKO Checker AKA
PM/DM
BRANCH MANAGER
CHIEF ENG/ ARCH
FIRE PROTECTION

DEPARTMENT OF THE NAVY
NAVAL FACILITIES ENGINEERING COMMAND ~ WASHINGTON
DoDEA
MARINE CORPS BASE QUANTICO
NAVAL FACILITIES ENGINEERING COMMAND
MARINE CORPS BASE QUANTICO, VIRGINIA
QUANTICO, VA

REPLACE QUANTICO M/H SCHOOL

STORM DRAIN PROFILES

SCALE: 1" = 30'
PROJECT NO.: P-021
CONSTR. CONTR. NO. W91236-15-C-0023
NAVFAC DRAWING NO. 13090829
SHEET 75 OF 789
CU312

DRAWFORM REVISION 10 MARCH 2009

RTA SUBMISSION - 10/13/2016

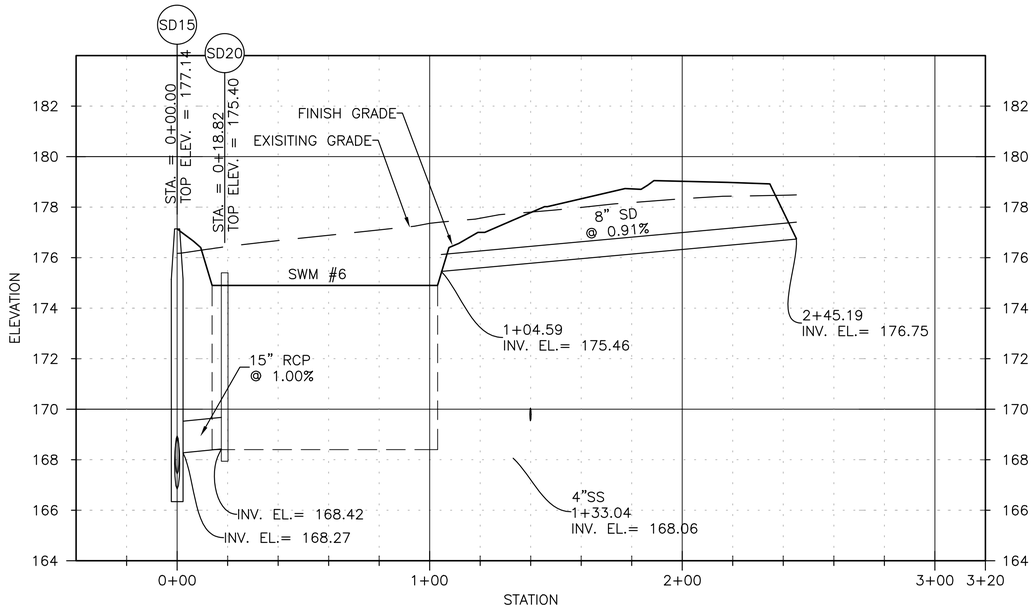

SD15–22
HORZ. SCALE 1:30
VERT. SCALE 1:3

NOTE: HGL IS BELOW TOP OF PIPES FOR ALL PROFILES THIS SHEET..

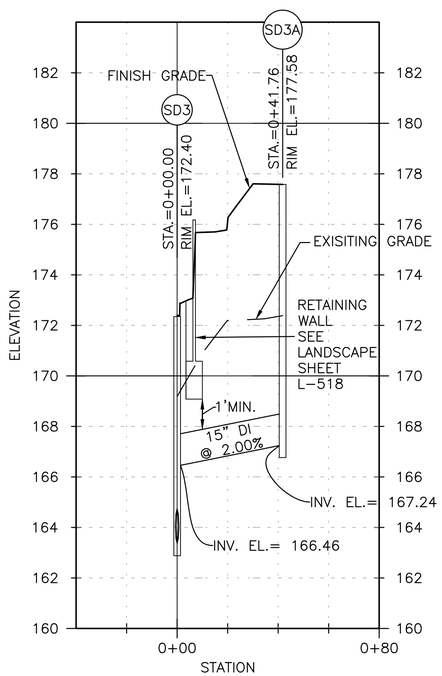

SD3– SD3A
HORZ. SCALE 1:30
VERT. SCALE 1:3

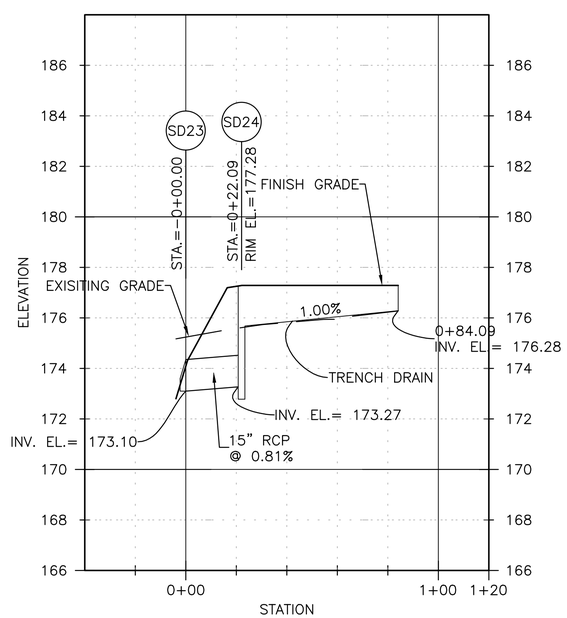

SD23–24
HORZ. SCALE 1:30
VERT. SCALE 1:3

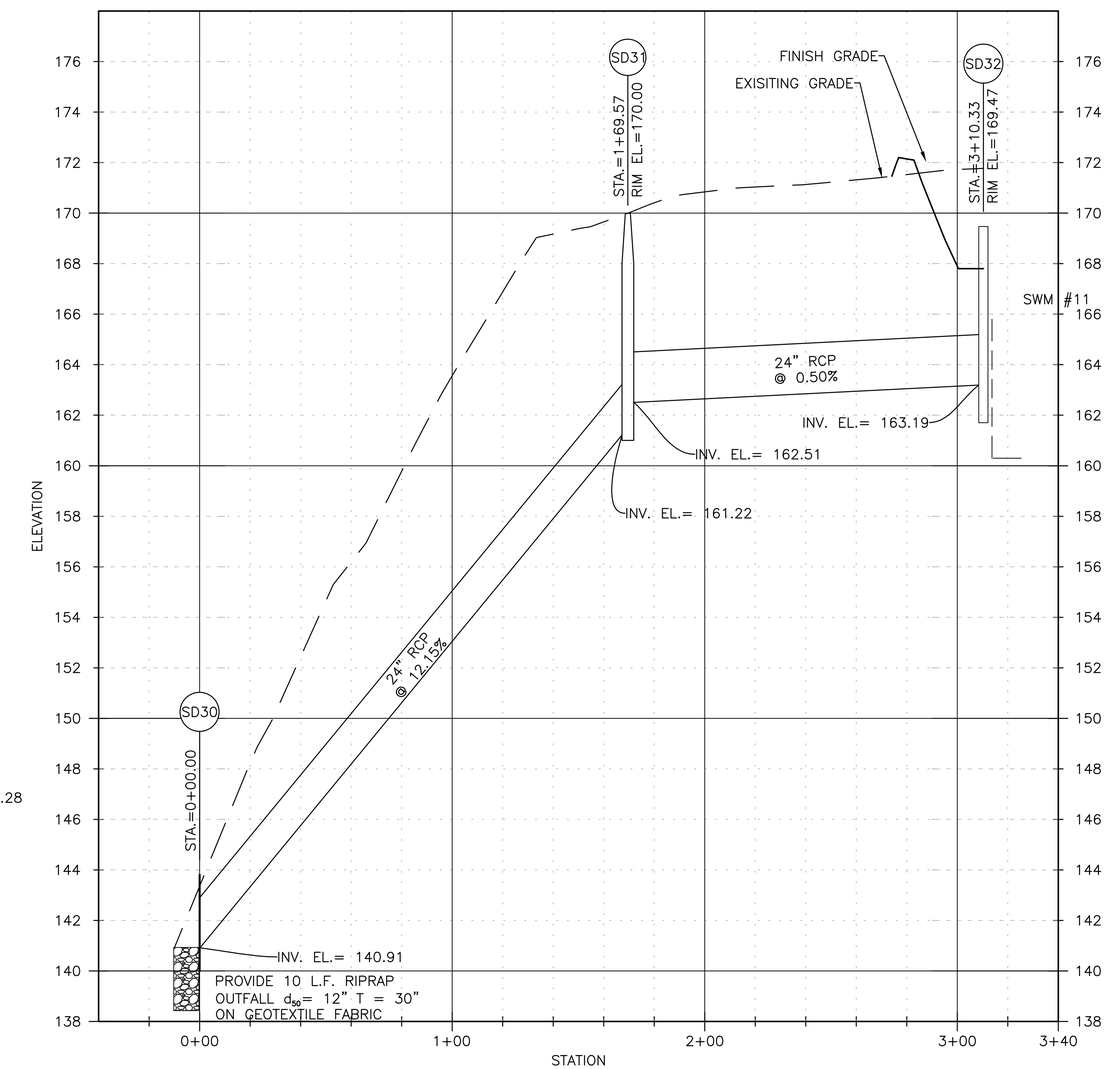

SD30 – SD32
HORZ. SCALE 1:30
VERT. SCALE 1:3

RTA SUBMISSION - 10/13/2016

NAVFAC

COMMONWEALTH OF VIRGINIA
ALAN KARL ARNOLD
Lic. No. 029959
10-13-2016
PROFESSIONAL ENGINEER
SEAL

EWING COLE
Federal Reserve Bank Building
100 North 6th Street
Philadelphia, PA 19106
Tel: 215.923.2020 Fax: 215.574.0952

STANTEC
6110 FROST PLACE
LAUREL, MD 20707
A/E INFO

APPROVED
FOR COMMANDER NAVFAC
ACTIVITY
SATISFACTORY TO DATE –/–/–
Designer JMS Author BKO Checker AKA
PM/DM
BRANCH MANAGER
CHIEF ENG/ ARCH
FIRE PROTECTION

DEPARTMENT OF THE NAVY
NAVAL FACILITIES ENGINEERING COMMAND
DoDEA
NAVAL FACILITIES ENGINEERING COMMAND – WASHINGTON
MARINE CORPS BASE QUANTICO, VIRGINIA
MARINE CORPS BASE QUANTICO
QUANTICO, VA
REPLACE QUANTICO M/H SCHOOL
STORM DRAIN PROFILES

SCALE: 1" = 30'
PROJECT NO: P-021
CONSTR. CONTR. NO. W91236-15-C-0023
NAVFAC DRAWING NO. 13090830
SHEET 76 OF 789
CU313

DRAWFORM REVISION: 10 MARCH 2009

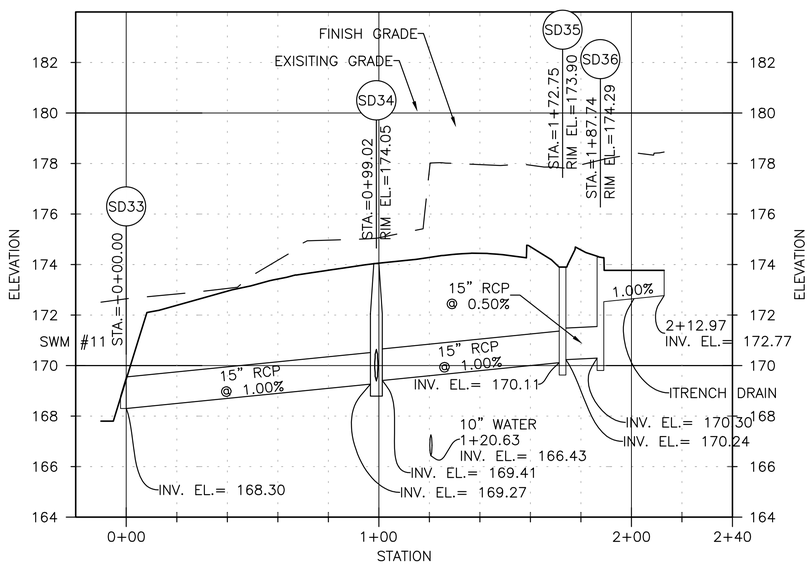

SD33 – SD36
HORZ. SCALE 1:30
VERT. SCALE 1:3

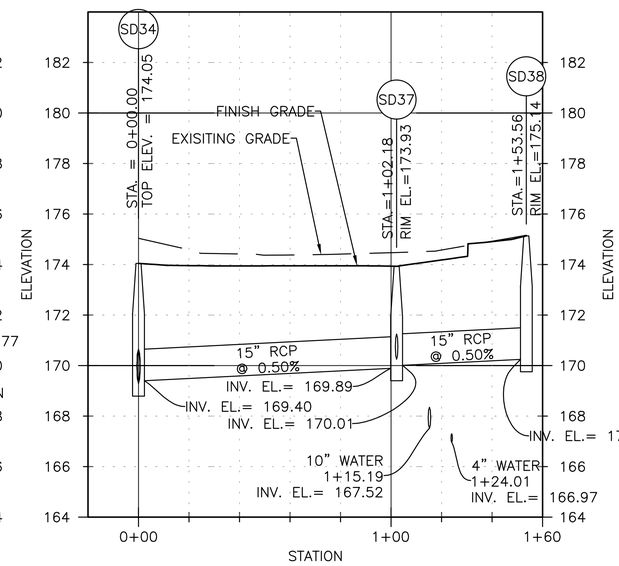

SD34– SD38
HORZ. SCALE 1:30
VERT. SCALE 1:3

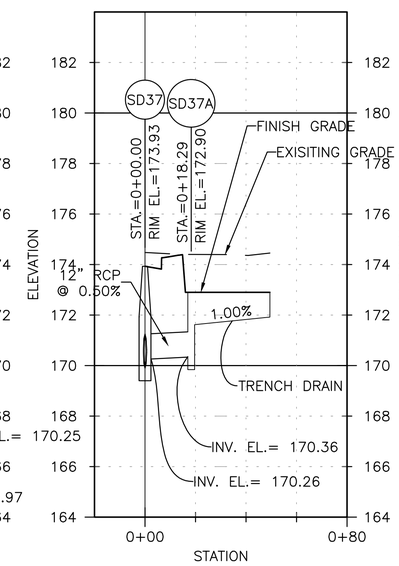

SD37 – SD37A
HORZ. SCALE 1:30
VERT. SCALE 1:3

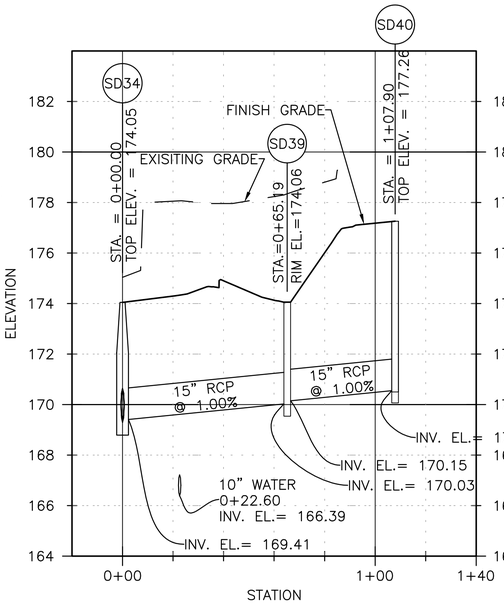

SD34– SD40
HORZ. SCALE 1:30
VERT. SCALE 1:3

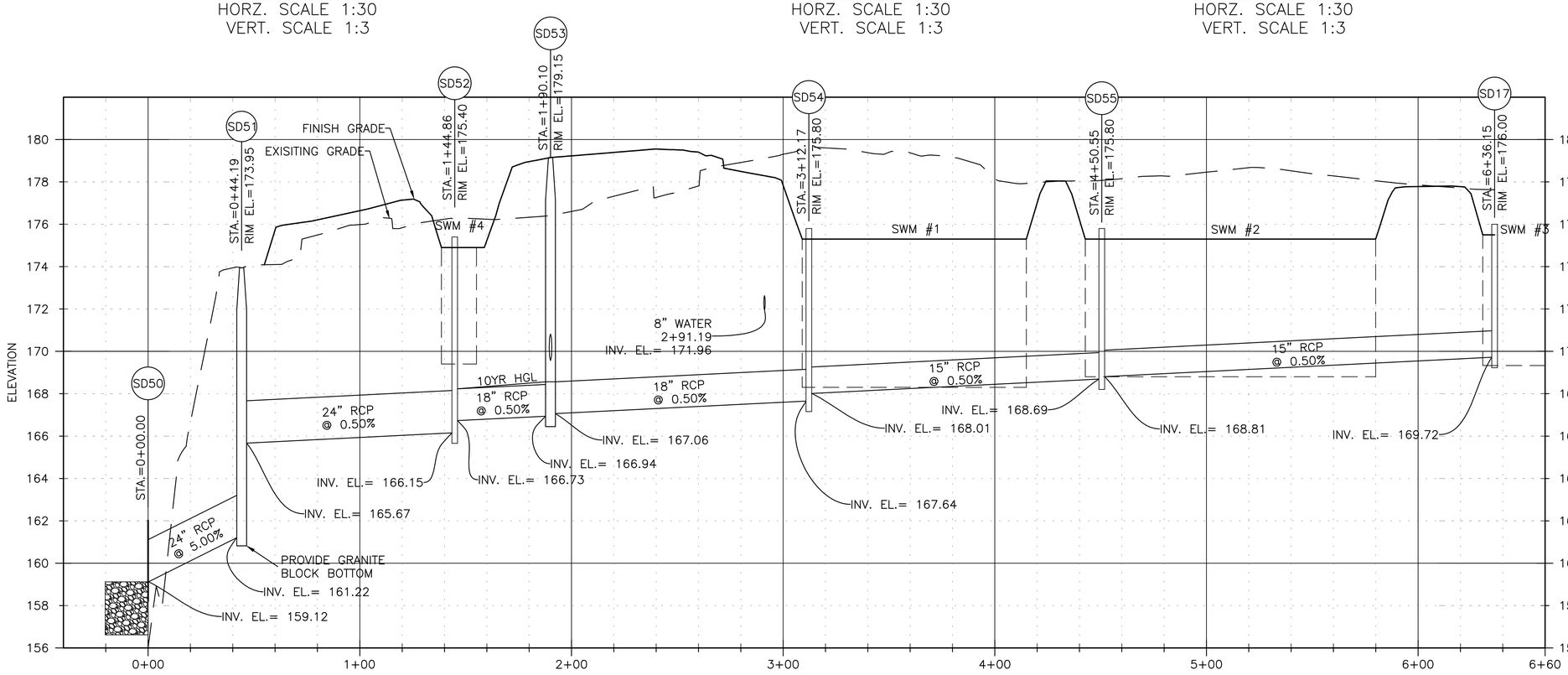

SD50 – SD55
HORZ. SCALE 1:30
VERT. SCALE 1:3

NOTE: HGL IS BELOW TOP OF PIPES FOR ALL PROFILES EXCEPT AS SHOWN BETWEEN STRUCTURES SD52 TO SD53.

RTA SUBMISSION - 10/13/2016

NAVFAC

COMMONWEALTH OF VIRGINIA
ALAN KARL ARNOLD
Lic. No. 029959
10-13-2016
PROFESSIONAL ENGINEER

EWING COLE
Federal Reserve Bank Building
100 North 6th Street
Philadelphia, PA 19106
Tel: 215.923.2020 Fax: 215.574.0952

STANTEC
6110 FROST PLACE
LAUREL, MD 20707

A/E INFO

APPROVED

FOR COMMANDER NAVFAC
ACTIVITY

SATISFACTORY TO DATE --/--/--

Designer JMS Author BKO Checker AKA

PM/DM

BRANCH MANAGER

CHIEF ENG/ ARCH

FIRE PROTECTION

DEPARTMENT OF THE NAVY
NAVAL FACILITIES ENGINEERING COMMAND
DoDEA

NAVAL FACILITES ENGINEERING COMMAND – WASHINGTON
MARINE CORPS BASE QUANTICO, VIRGINIA

MARINE CORPS BASE QUANTICO
QUANTICO, VA

REPLACE QUANTICO M/H SCHOOL

STORM DRAIN PROFILES

SCALE: 1" = 30'

PROJECT NO.: P-021

CONSTR. CONTR. NO.: W91236-15-C-0023

NAVFAC DRAWING NO.: 13090831

SHEET 77 OF 789

CU314

DRAWFORM REVISION: 10 MARCH 2009

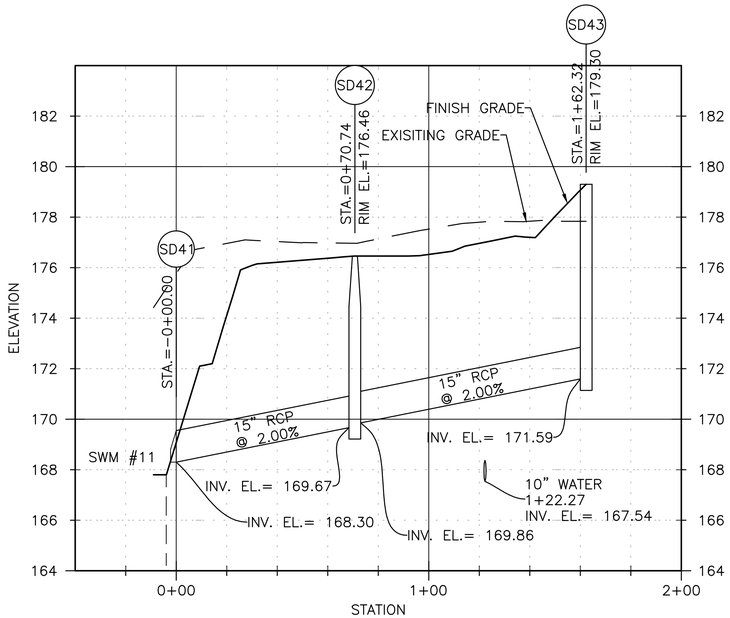

SD41– SD43
HORZ. SCALE 1:30
VERT. SCALE 1:3

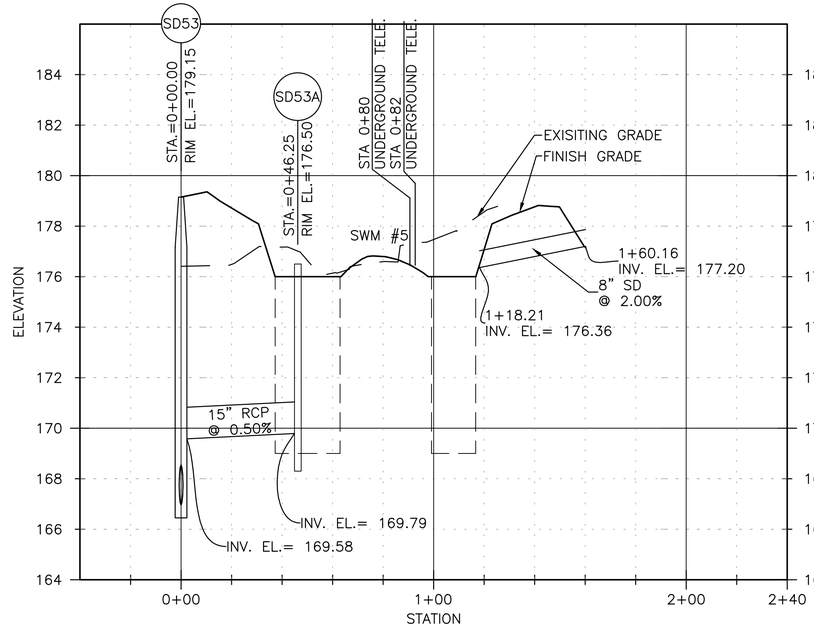

SD53 – SD53A
HORZ. SCALE 1:30
VERT. SCALE 1:3

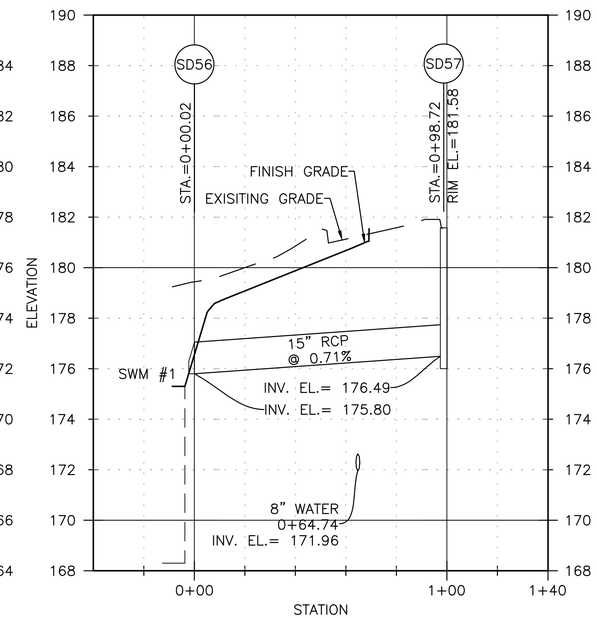

SD56– SD57
HORZ. SCALE 1:30
VERT. SCALE 1:3

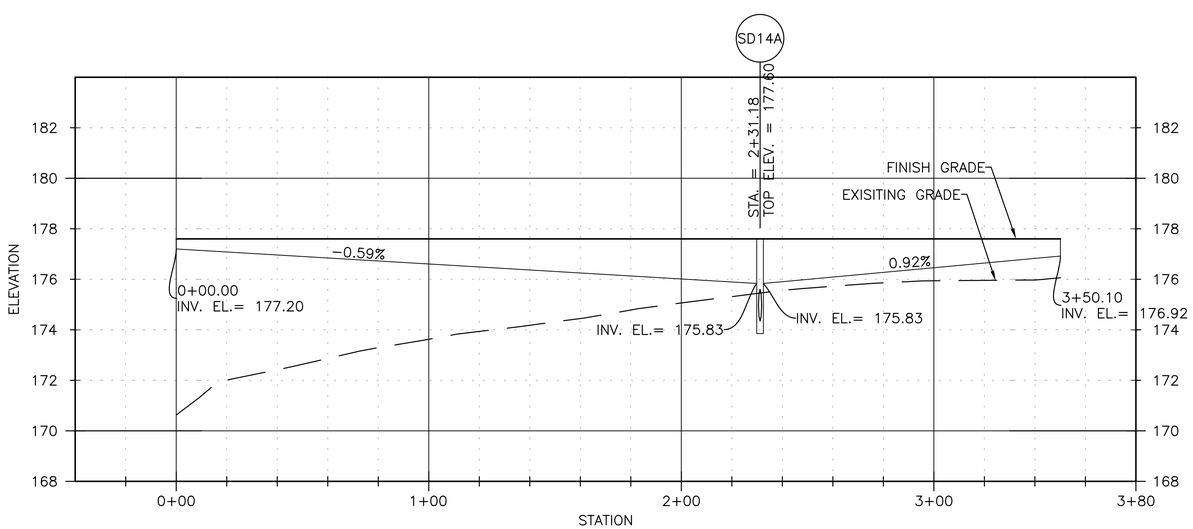

FOOTBALL FIELD TRENCH DRAIN
HORZ. SCALE 1:30
VERT. SCALE 1:3

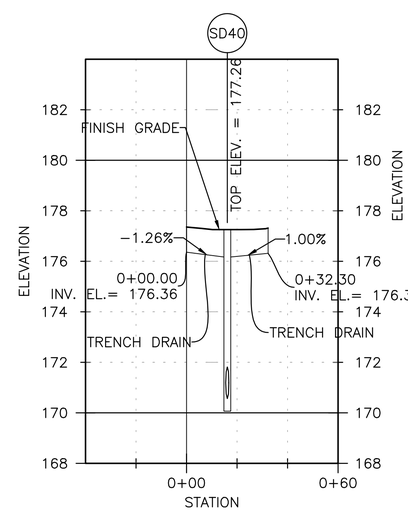

TRENCH DRAIN @ SD40
HORZ. SCALE 1:30
VERT. SCALE 1:3

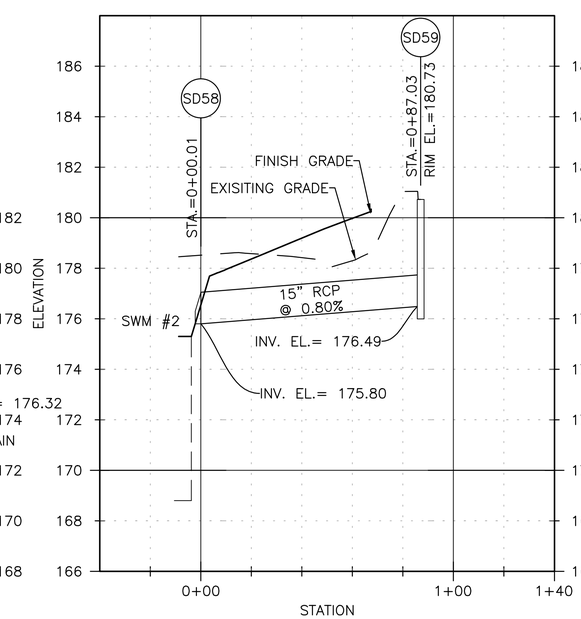

SD58 – SD59
HORZ. SCALE 1:30
VERT. SCALE 1:3

NOTE: HGL IS BELOW TOP OF PIPES FOR ALL PROFILES THIS SHEET.

NAVFAC

COMMONWEALTH OF VIRGINIA
ALAN KARL ARNOLD
Lic. No. 029959
10-13-2016
PROFESSIONAL ENGINEER
SEAL

EWING COLE
Federal Reserve Bank Building
100 North 6th Street
Philadelphia, PA 19106
Tel: 215.923.2020 Fax: 215.574.0562

STANTEC
6110 FROST PLACE
LAUREL, MD 20707

A/E INFO

APPROVED

FOR COMMANDER NAVFAC
ACTIVITY

SATISFACTORY TO DATE

Designer JMS Author BKO Checker AKA

PM/DM

BRANCH MANAGER

CHIEF ENG/ ARCH

FIRE PROTECTION

DEPARTMENT OF THE NAVY
NAVAL FACILITIES ENGINEERING COMMAND
DoDEA
NAVAL FACILITIES ENGINEERING COMMAND – WASHINGTON
MARINE CORPS BASE QUANTICO
MARINE CORPS BASE QUANTICO, VIRGINIA
QUANTICO, VA

REPLACE QUANTICO M/H SCHOOL

STORM DRAIN PROFILES

SCALE: 1" = 30'
PROJECT NO.: P-021
CONSTR. CONTR. NO. W91236-15-C-0023
NAVFAC DRAWING NO. 13090832
SHEET 78 OF 789
CU315

DRAWFORM REVISION: 10 MARCH 2009

RTA SUBMISSION - 10/13/2016

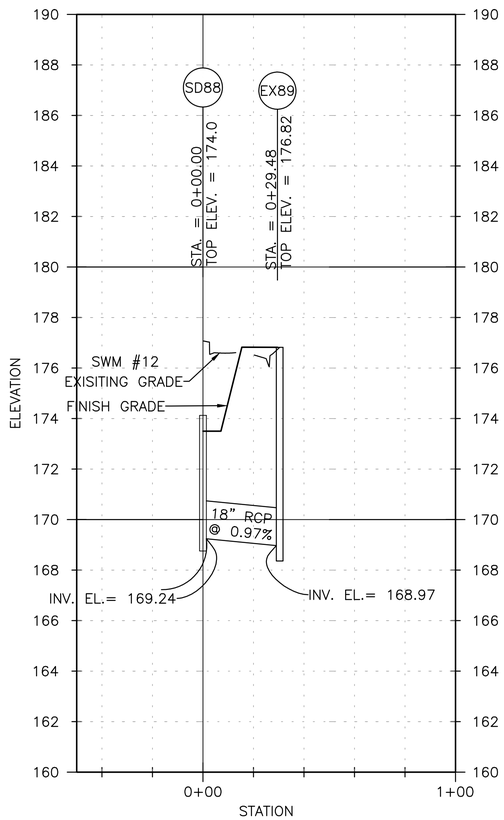

BBall SD 4
HORZ. SCALE 1:30
VERT. SCALE 1:3

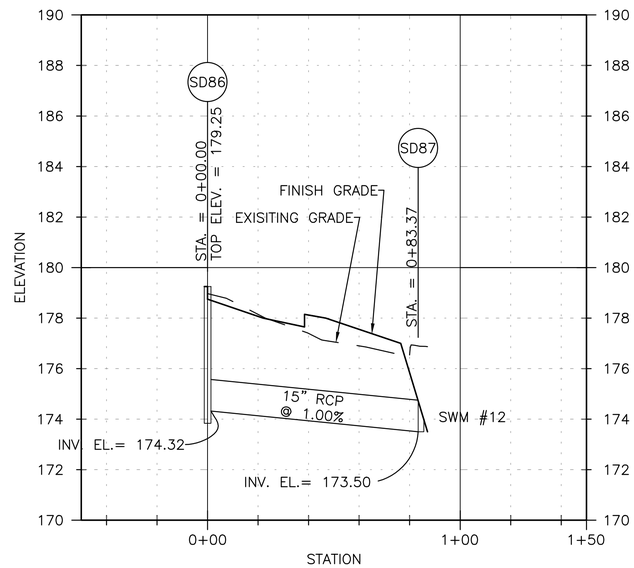

BBall SD 3
HORZ. SCALE 1:30
VERT. SCALE 1:3

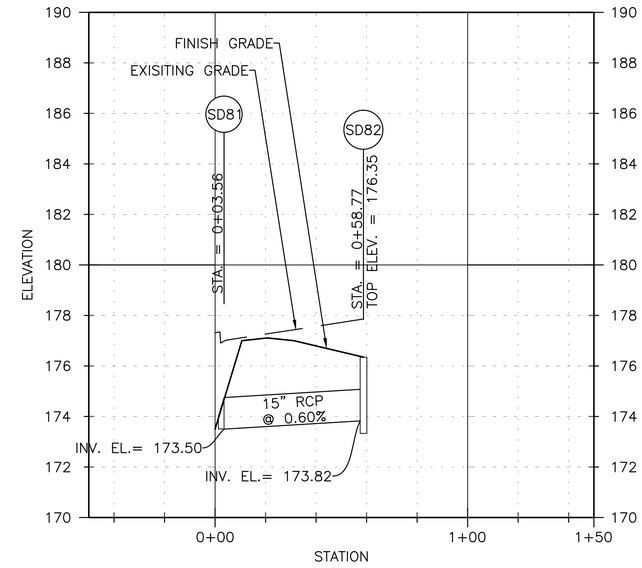

BBall SD 1
HORZ. SCALE 1:30
VERT. SCALE 1:3

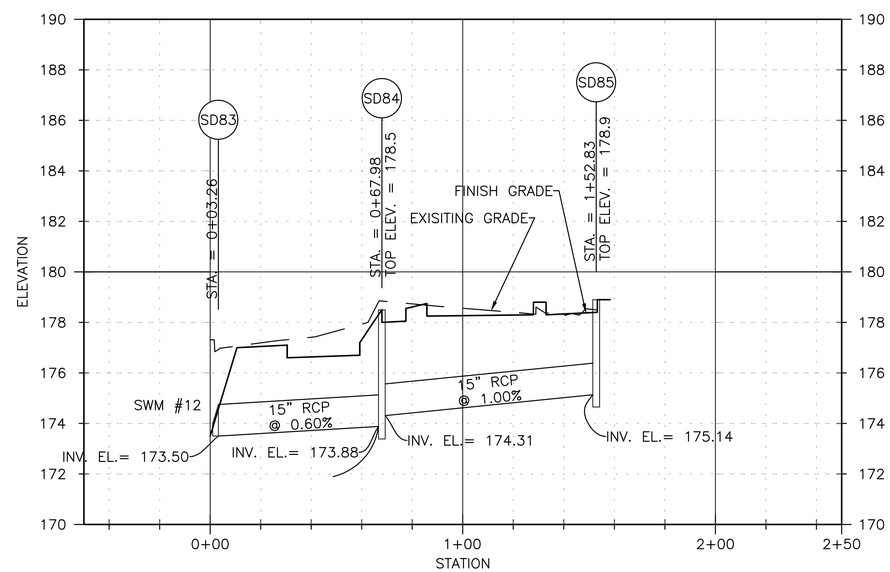

BBall SD 2
HORZ. SCALE 1:30
VERT. SCALE 1:3

NOTE: HGL IS BELOW TOP OF PIPES FOR ALL PROFILES THIS SHEET.

SYM	DESCRIPTION	DATE	APPR

NAVFAC

COMMONWEALTH OF VIRGINIA
ALAN KARL ARNOLD
Lic. No. 029959
10-13-2016
PROFESSIONAL ENGINEER
SEAL

EWING COLE
Federal Reserve Bank Building
100 North 6th Street
Philadelphia, PA 19106
Tel: 215.923.2020 Fax: 215.574.0562

STANTEC
6110 FROST PLACE
LAUREL, MD 20707
A/E INFO

APPROVED

FOR COMMANDER NAVFAC
ACTIVITY

SATISFACTORY TO DATE -/-/-
Designer JMS Author BKO Checker AKA
PM/DM
BRANCH MANAGER
CHIEF ENG/ ARCH
FIRE PROTECTION

DEPARTMENT OF THE NAVY
NAVAL FACILITIES ENGINEERING COMMAND – WASHINGTON
DoDEA
NAVAL FACILITIES ENGINEERING COMMAND
MARINE CORPS BASE QUANTICO, VIRGINIA
MARINE CORPS BASE QUANTICO
QUANTICO, VA

REPLACE QUANTICO M/H SCHOOL

STORM DRAIN PROFILES

SCALE: 1" = 30'
PROJECT NO.: P-021
CONSTR. CONTR. NO.
W91236-15-C-0023
NAVFAC DRAWING NO.
13090833
SHEET 79 OF 789
CU316

DRAWFORM REVISION: 10 MARCH 2009

RTA SUBMISSION - 10/13/2016

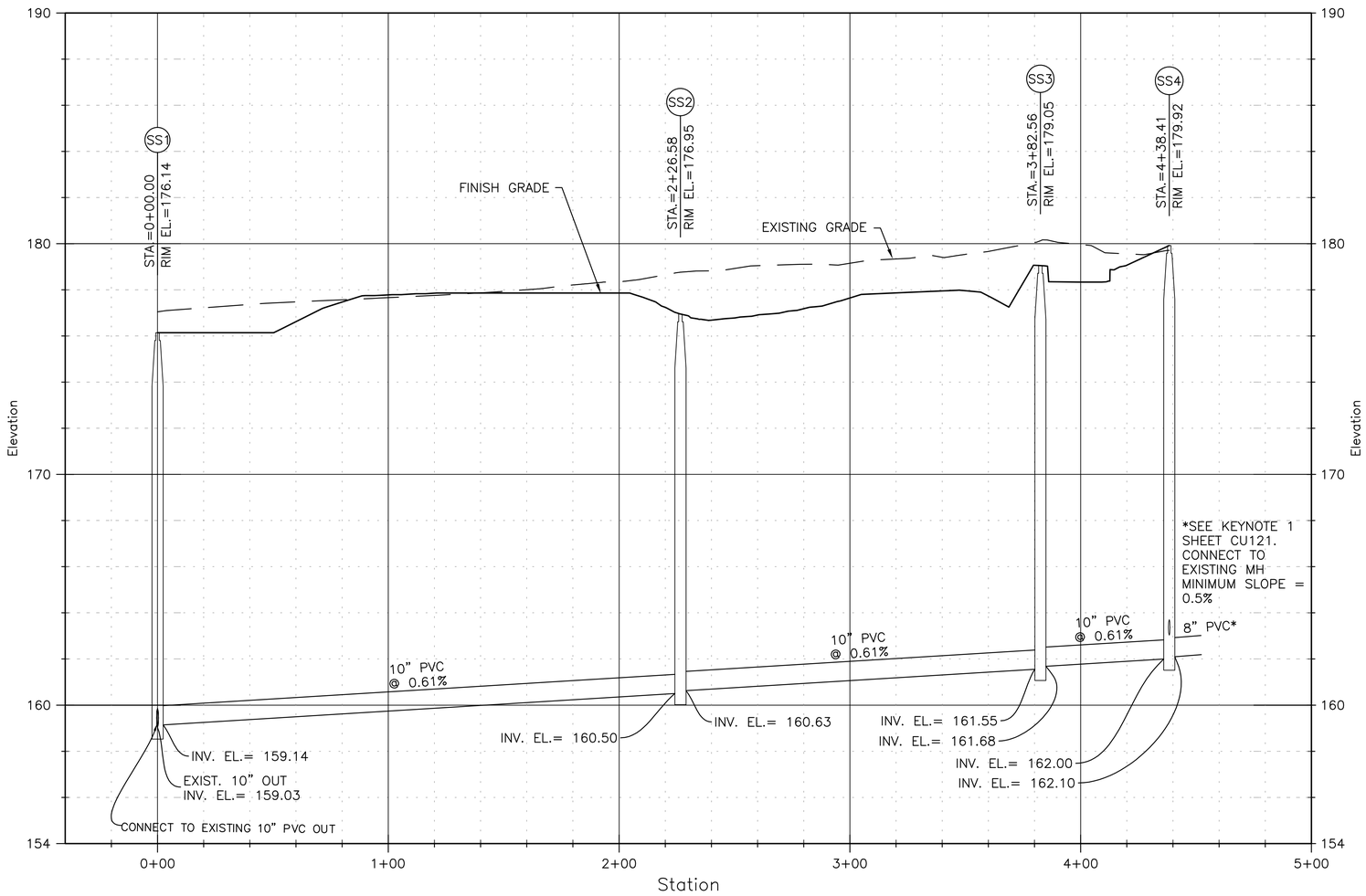

SS1 – SS4 ALIGNMENT
HORZ. SCALE 1"= 30'
VERT. SCALE 1"= 3'

SANITARY SEWER PIPE TABLE		
STRUCTURE – STRUCTURE	INSIDE DIA. (in.)	Length (ft)
SS1 – SS2	10	226.6
SS2 – SS3	10	156.0
SS3 – SS4	10	55.9

NAVFAC

COMMONWEALTH OF VIRGINIA
ALAN KARL ARNOLD
Lic. No. 029959
10-13-2016
PROFESSIONAL ENGINEER
SEAL

EWING COLE
Federal Reserve Bank Building
100 North 6th Street
Philadelphia, PA 19106
Tel: 215.923.2020 Fax: 215.574.0562

STANTEC
6110 FROST PLACE
LAUREL, MD 20707
A/E INFO

APPROVED
FOR COMMANDER NAVFAC
ACTIVITY
SATISFACTORY TO DATE --/--/--
Designer JMS Author BKO Checker AKA
PM/DM
BRANCH MANAGER
CHIEF ENGI ARCH
FIRE PROTECTION

DEPARTMENT OF THE NAVY
NAVAL FACILITIES ENGINEERING COMMAND
DoDEA
NAVAL FACILITIES ENGINEERING COMMAND – WASHINGTON
MARINE CORPS BASE QUANTICO, VIRGINIA
MARINE CORPS BASE QUANTICO
QUANTICO, VA
REPLACE QUANTICO M/H SCHOOL
SANITARY SEWER PROFILES

SCALE: 1" = 30'
PROJECT NO.: P-021
CONSTR. CONTR. NO.
W91236-15-C-0023
NAVFAC DRAWING NO.
13090834
SHEET 80 OF 789
CU321

RTA SUBMISSION - 10/13/2016

SANITARY SEWER PIPE TABLE		
STRUCTURE – STRUCTURE	INSIDE DIA. (in.)	Length (ft)
SS4 – SS5	8	127.6
SS5 – SS6	8	108.1
SS6 – SS7	8	104.2
SS6 – SS10	6	65.3
SS7 – SS8	6	132.1
SS8 – SS9	6	32.5

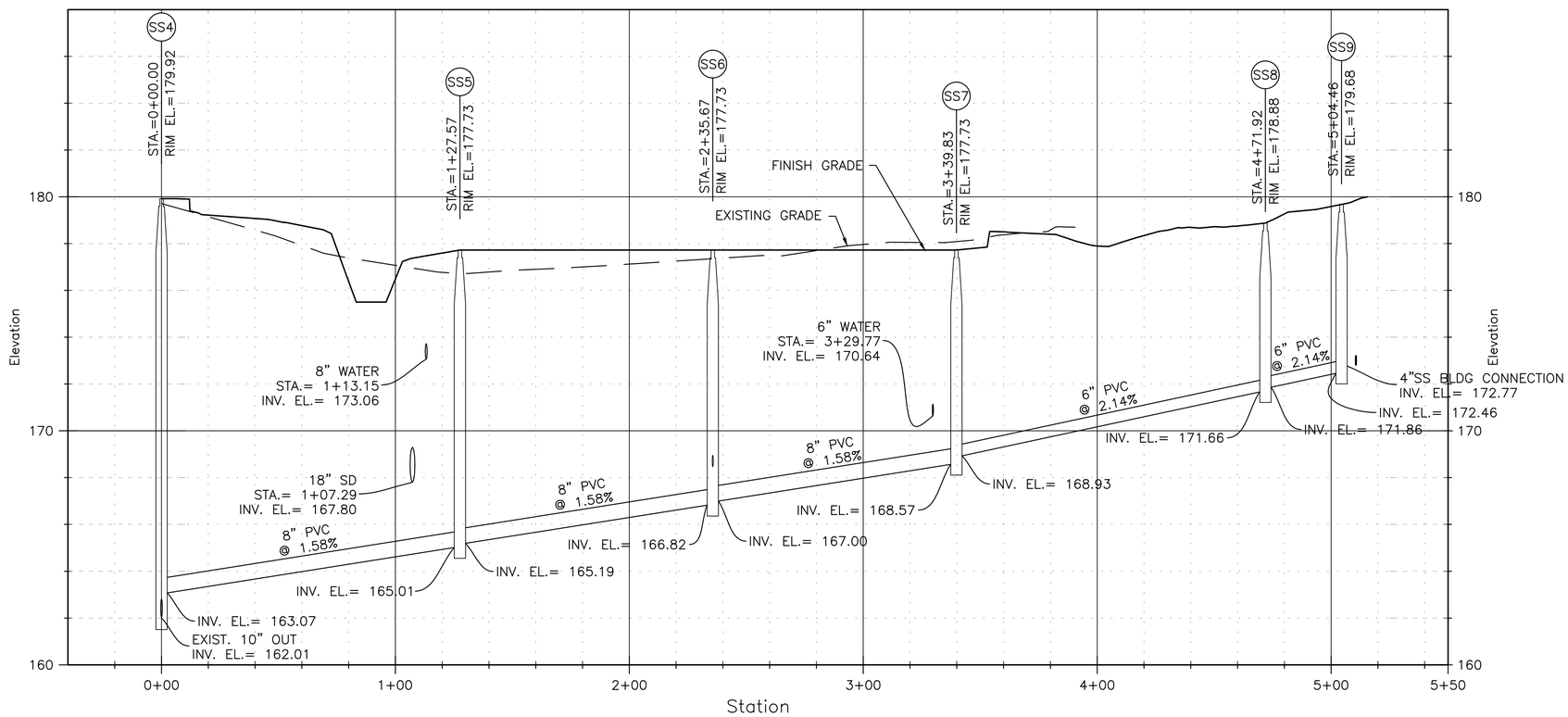

SS4 – SS9 ALIGNMENT
HORZ. SCALE 1"= 30'
VERT. SCALE 1"= 3'

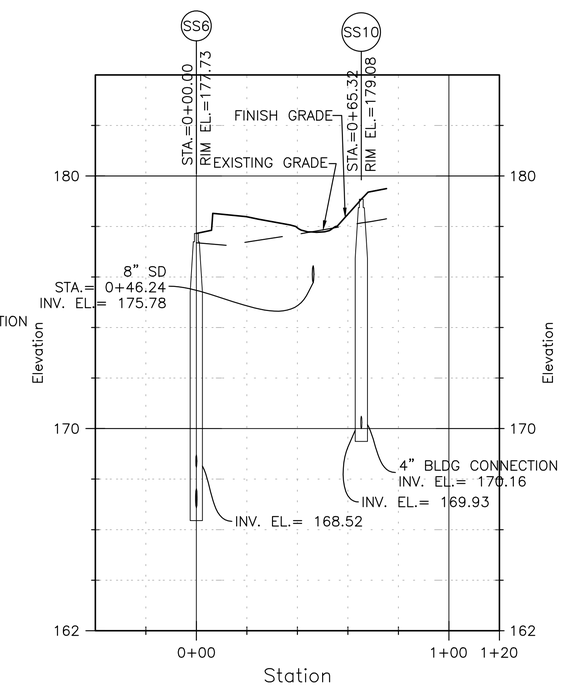

SS6 – SS10 ALIGNMENT
HORZ. SCALE 1"= 30'
VERT. SCALE 1"= 3'

NAVFAC

SEAL

EWING COLE
Federal Reserve Bank Building
100 North 6th Street
Philadelphia, PA 19106
Tel: 215.923.2020 Fax: 215.574.0562

STANTEC
6110 FROST PLACE
LAUREL, MD 20707

A/E INFO

APPROVED

FOR COMMANDER NAVFAC
ACTIVITY

SATISFACTORY TO DATE –/–/–

Designer JMS Author BKO Checker AKA

PM/DM

BRANCH MANAGER

CHIEF ENG/ ARCH

FIRE PROTECTION

DEPARTMENT OF THE NAVY
NAVAL FACILITIES ENGINEERING COMMAND
DoDEA
MARINE CORPS BASE QUANTICO

NAVAL FACILITIES ENGINEERING COMMAND ~ WASHINGTON
MARINE CORPS BASE QUANTICO, VIRGINIA
QUANTICO, VA

REPLACE QUANTICO M/H SCHOOL

SANITARY SEWER PROFILES

SCALE: 1" = 30'

PROJECT NO.: P-021

CONSTR. CONTR. NO.
W91236-15-C-0023

NAVFAC DRAWING NO.
13090835

SHEET 81 OF 789

CU322

DRAWFORM REVISION 10 MARCH 2009

RTA SUBMISSION - 10/13/2016

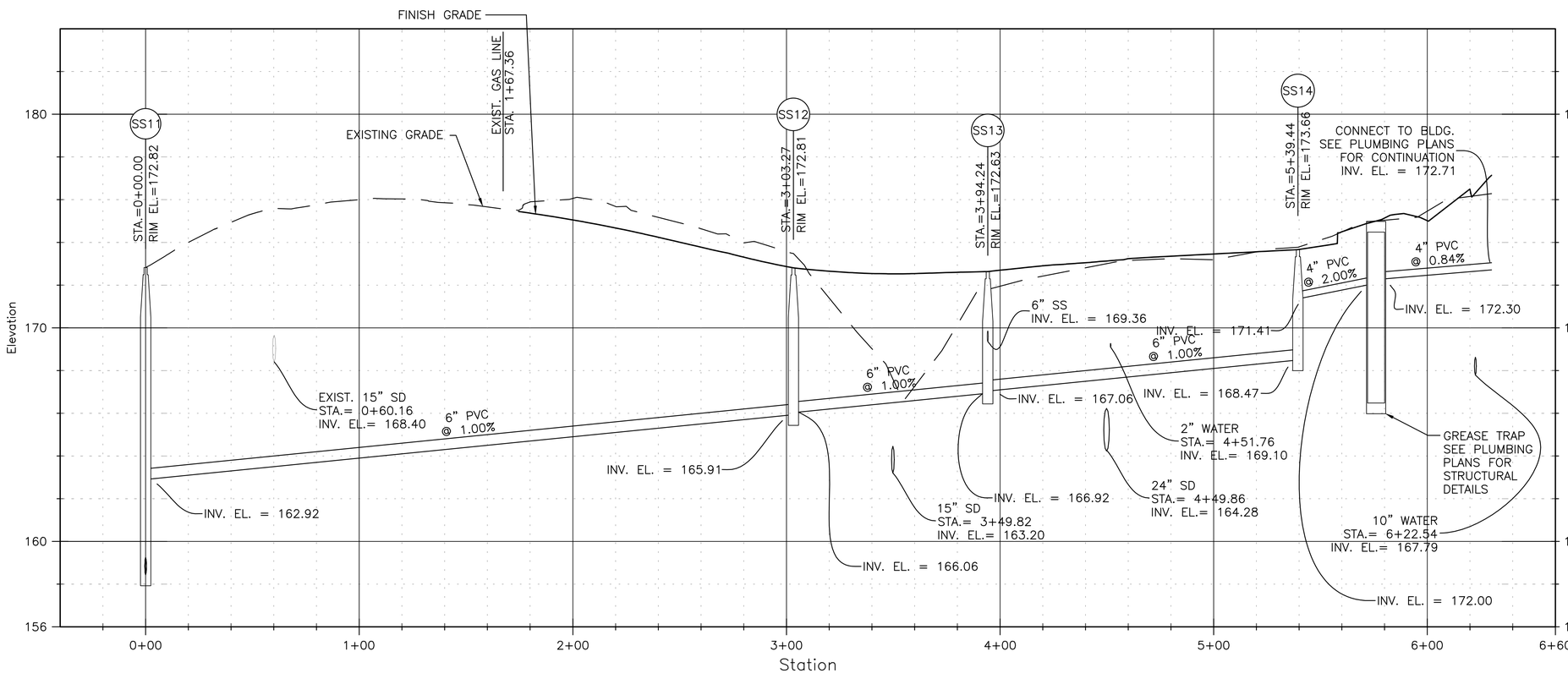

SS11 – SS14 ALIGNMENT
HORZ. SCALE 1"= 30'
VERT. SCALE 1"= 3'

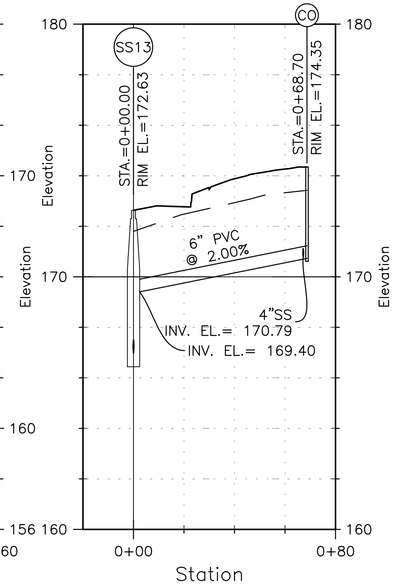

SS13 – CONC. STAND
HORZ. SCALE 1"= 30'
VERT. SCALE 1"= 3'

SANITARY SEWER PIPE TABLE

STRUCTURE – STRUCTURE	INSIDE DIA. (in.)	Length (ft)
SS11 – SS12	6	303.3
SS12 – SS13	6	91.0
SS13 – CO	6	68.7
SS13 – SS14	6	145.2
SS14 – TRAP OUT	4	32.1
TRAP IN – BLDG	4	49.6

RTA SUBMISSION - 10/13/2016

NAVFAC

COMMONWEALTH OF VIRGINIA
ALAN KARL ARNOLD
Lic. No. 029959
10-13-2016
PROFESSIONAL ENGINEER
SEAL

EWING COLE
Federal Reserve Bank Building
100 North 6th Street
Philadelphia, PA 19106
Tel: 215.923.2020 Fax: 215.574.0562

STANTEC
6110 FROST PLACE
LAUREL, MD 20707

A/E INFO

APPROVED

FOR COMMANDER NAVFAC
ACTIVITY

SATISFACTORY TO DATE

Designer JMS Author BKO Checker AKA

PM/DM

BRANCH MANAGER

CHIEF ENG/ ARCH

FIRE PROTECTION

DEPARTMENT OF THE NAVY
NAVAL FACILITIES ENGINEERING COMMAND
DoDEA
NAVAL FACILITIES ENGINEERING COMMAND ~ WASHINGTON
MARINE CORPS BASE QUANTICO, VIRGINIA
MARINE CORPS BASE QUANTICO
QUANTICO, VA
REPLACE QUANTICO M/H SCHOOL
SANITARY SEWER PROFILES

SCALE: 1" = 30'
PROJECT NO.: P-021
CONSTR. CONTR. NO. W91236-15-C-0023
NAVFAC DRAWING NO. 13090836
SHEET 82 OF 789
CU323

DRAWFORM REVISION: 10 MARCH 2009

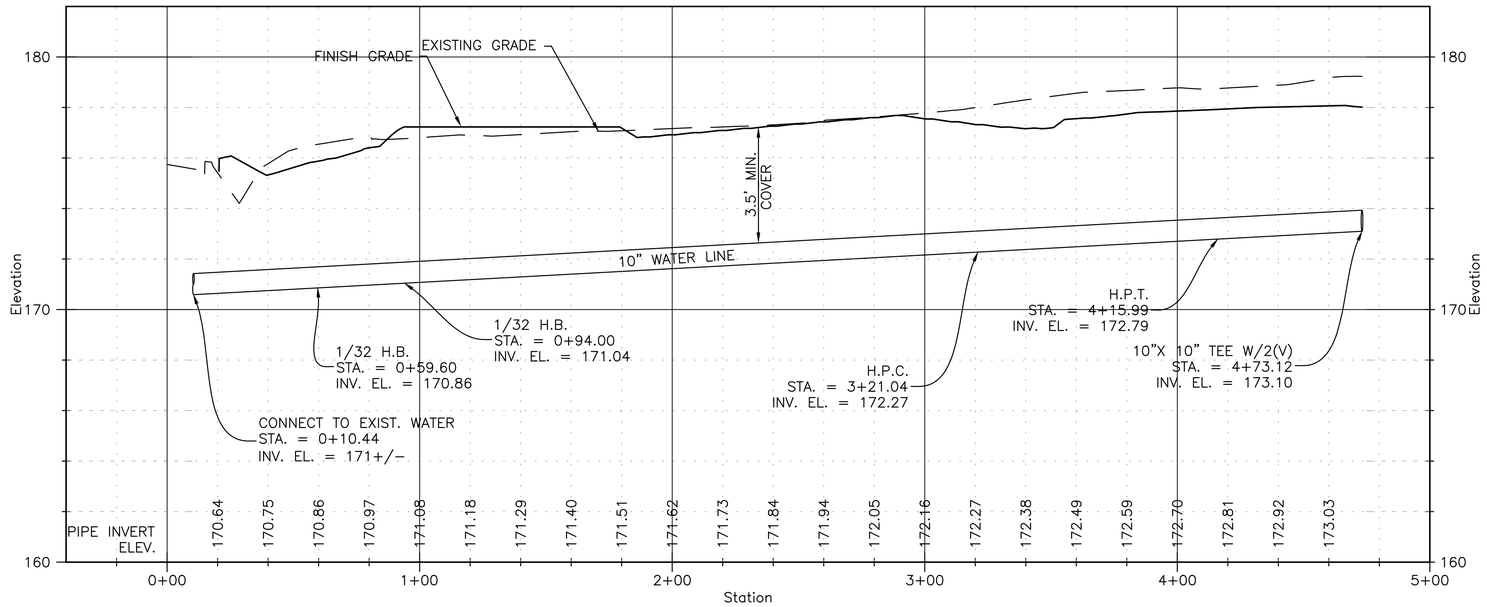

WATERLINE #1 0+00 – 4+73.12
HORZ. SCALE 1"= 30'
VERT. SCALE 1"= 3'

NOTE: SEE SHEET CU721 FOR WATER POINT TABLES.

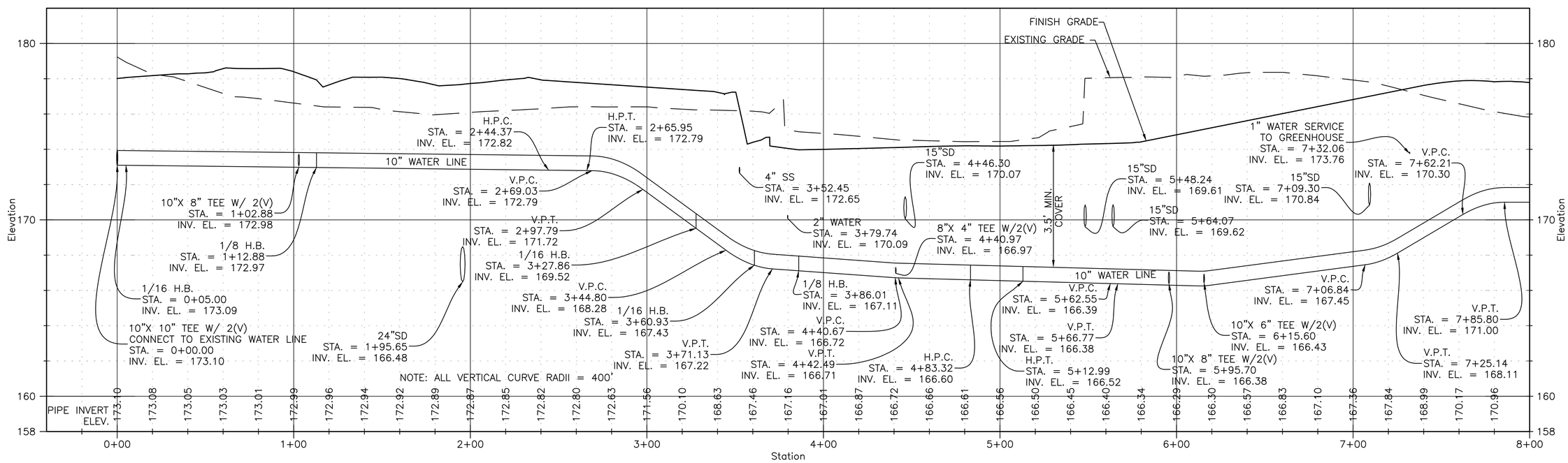

WATERLINE #2 ALIGNMENT 0+00 – 8+00
HORZ. SCALE 1"= 30'
VERT. SCALE 1"= 3'

NAVFAC

COMMONWEALTH OF VIRGINIA
ALAN KARL ARNOLD
Lic. No. 029959
10-13-2016
PROFESSIONAL ENGINEER
SEAL

EWING COLE
Federal Reserve Bank Building
100 North 6th Street
Philadelphia, PA 19106
Tel: 215.923.2020 Fax: 215.574.0562

STANTEC
6110 FROST PLACE
LAUREL, MD 20707
A/E INFO

APPROVED
FOR COMMANDER NAVFAC
ACTIVITY
SATISFACTORY TO DATE –/–/–
Designer JMS Author BKO Checker AKA
PM/DM
BRANCH MANAGER
CHIEF ENG/ ARCH
FIRE PROTECTION

DEPARTMENT OF THE NAVY
NAVAL FACILITIES ENGINEERING COMMAND
DoDEA
NAVAL FACILITIES ENGINEERING COMMAND – WASHINGTON
MARINE CORPS BASE QUANTICO, VIRGINIA
MARINE CORPS BASE QUANTICO
QUANTICO, VA

REPLACE QUANTICO M/H SCHOOL

WATER LINE PROFILES

SCALE: 1" = 30'
PROJECT NO.: P-021
CONSTR. CONTR. NO.
W91236-15-C-0023
NAVFAC DRAWING NO.
13090837
SHEET 83 OF 789
CU331

DRAWFORM REVISION: 10 MARCH 2009

RTA SUBMISSION - 10/13/2016