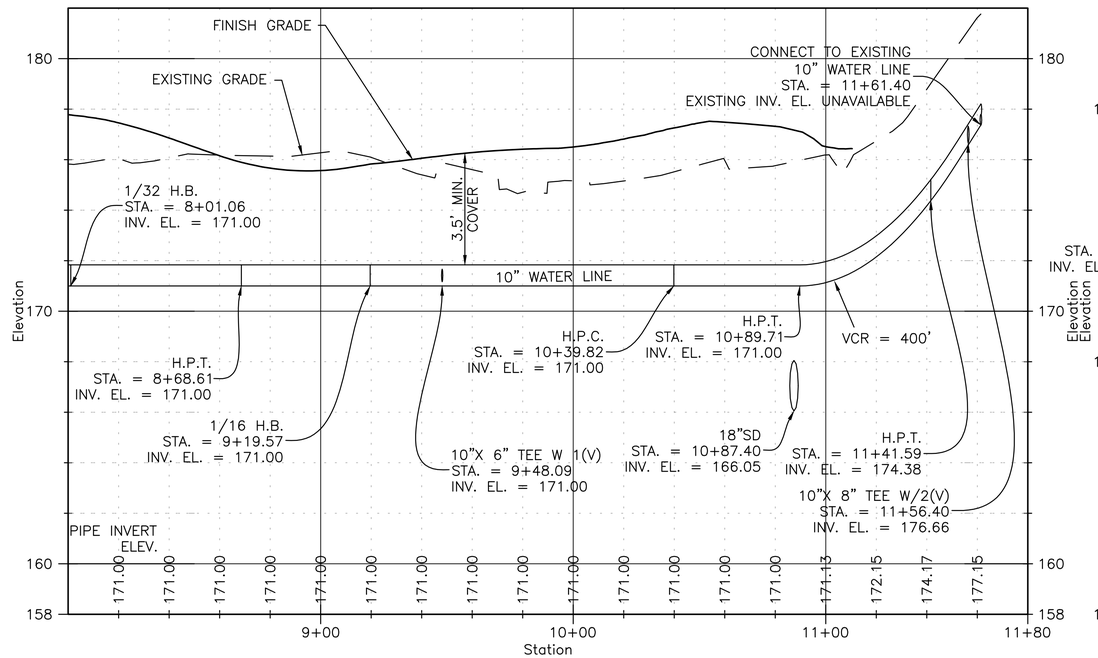

WATERLINE #2 ALIGNMENT 8+00 – 11+61.40
HORZ. SCALE 1"= 30'
VERT. SCALE 1"= 3'

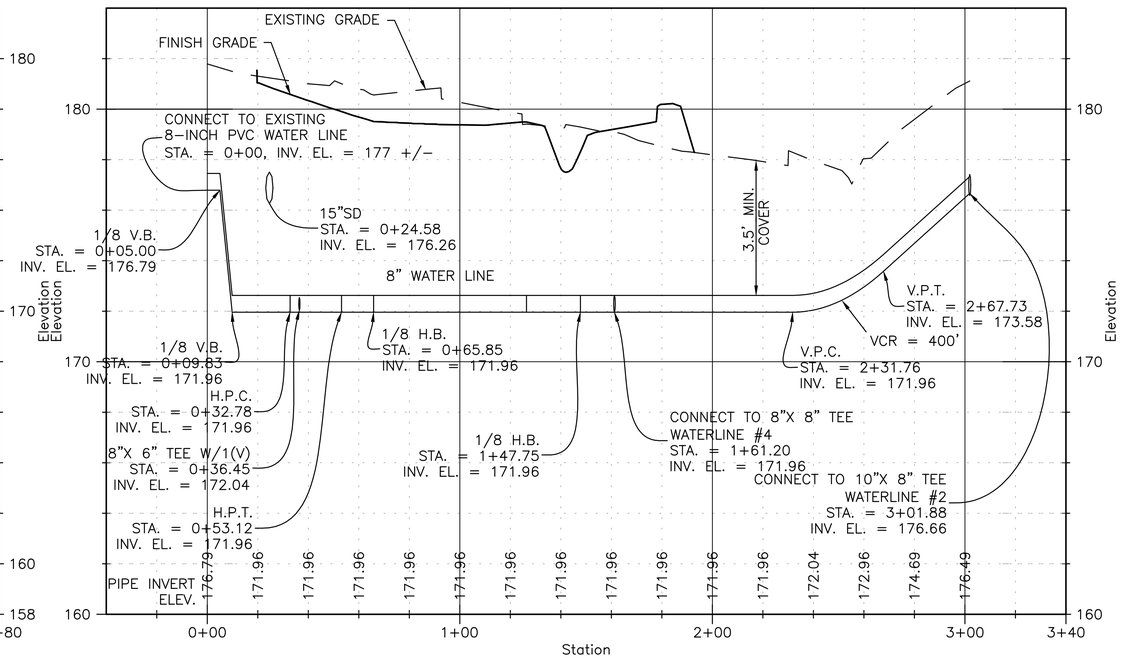

WATERLINE #3 0+00 – 3+01.88
HORZ. SCALE 1"= 30'
VERT. SCALE 1"= 3'

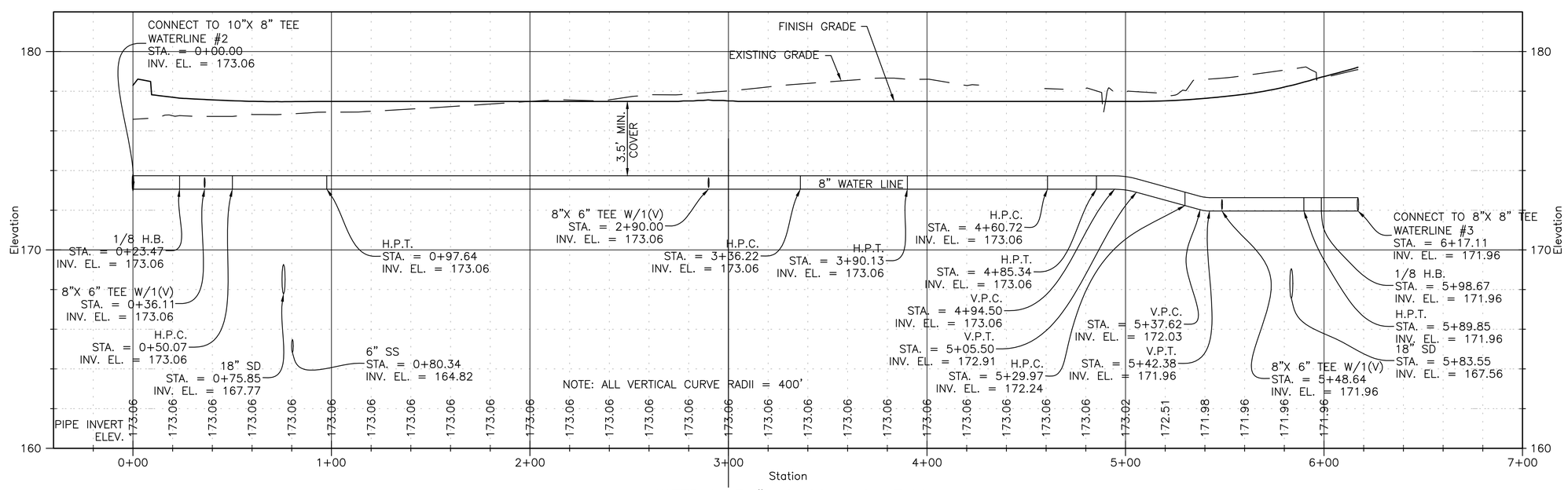

WATER LINE #4 0+00 – 6+17.11
HORZ. SCALE 1"= 30'
VERT. SCALE 1"= 3'

NOTE: SEE SHEET CU721 FOR WATER POINT TABLES.

RTA SUBMISSION - 10/13/2016

APPR	DATE	DESCRIPTION	SYM

NAVFAC

COMMONWEALTH OF VIRGINIA
ALAN KARL ARNOLD
Lic. No. 029959
10-13-2016
PROFESSIONAL ENGINEER
SEAL

EWING COLE
Federal Reserve Bank Building
100 North 6th Street
Philadelphia, PA 19106
Tel: 215.923.2020 Fax: 215.574.0562

STANTEC
6110 FROST PLACE
LAUREL, MD 20707
A/E INFO

APPROVED

FOR COMMANDER NAVFAC
ACTIVITY

SATISFACTORY TO DATE –/–/–
Designer JMS Author BKO Checker AKA
PM/DM
BRANCH MANAGER
CHIEF ENGI ARCH
FIRE PROTECTION

DEPARTMENT OF THE NAVY
DoDEA
NAVAL FACILITIES ENGINEERING COMMAND
NAVAL FACILITIES ENGINEERING COMMAND – WASHINGTON
MARINE CORPS BASE QUANTICO
MARINE CORPS BASE QUANTICO, VIRGINIA
QUANTICO, VA

REPLACE QUANTICO M/H SCHOOL

WATER LINE PROFILES

SCALE:	1" = 30'
PROJECT NO.:	P-021
CONSTR. CONTR. NO.	W91236-15-C-0023
NAVFAC DRAWING NO.	13090838
SHEET	84 OF 789
	CU332

DRAWFORM REVISION: 10 MARCH 2009

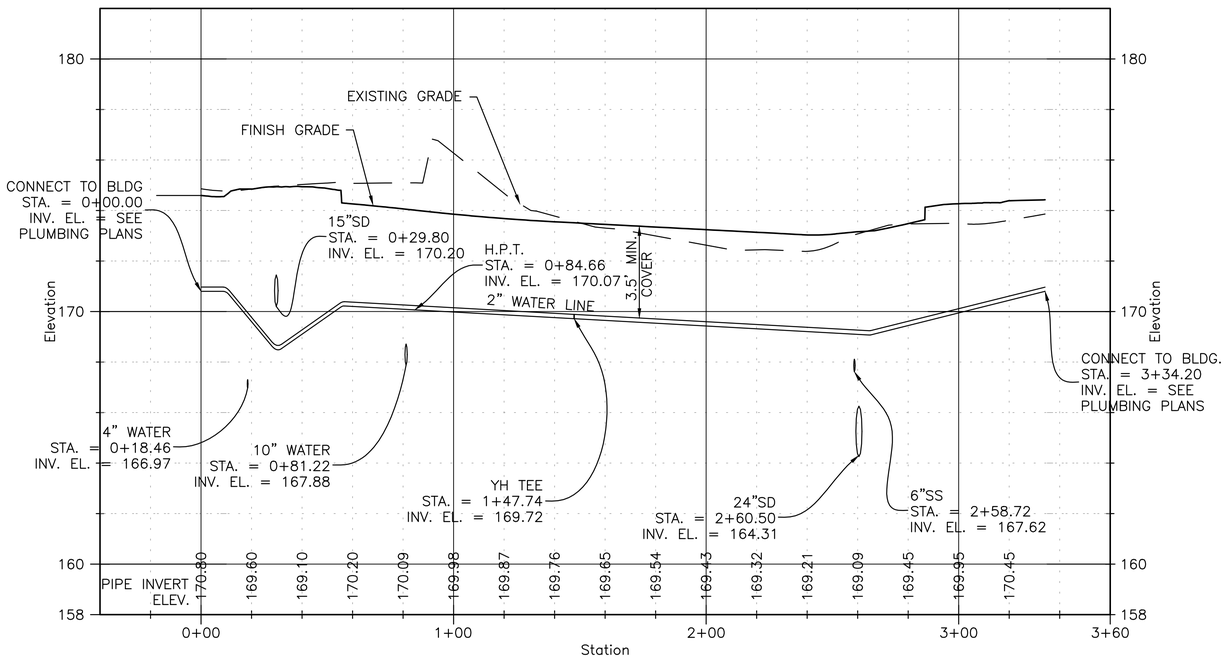

WATERLINE #5 0+00 – 3+16.26
HORZ. SCALE 1"= 30'
VERT. SCALE 1"= 3'

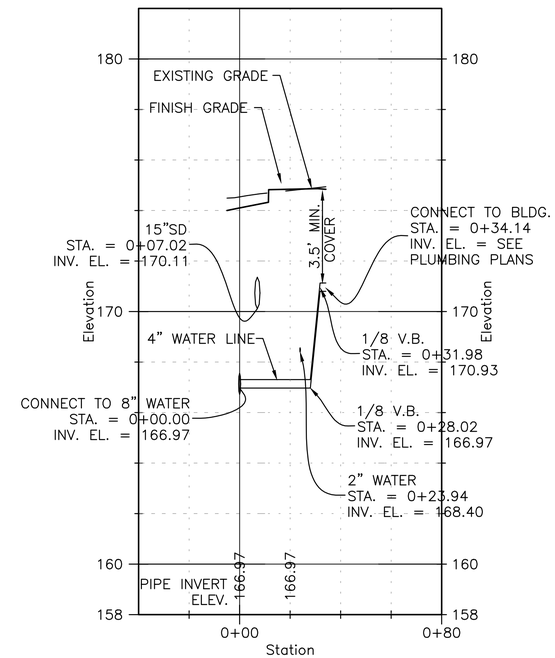

WATER SERVICE TO MAIN BLDG
HORZ. SCALE 1"= 30'
VERT. SCALE 1"= 3'

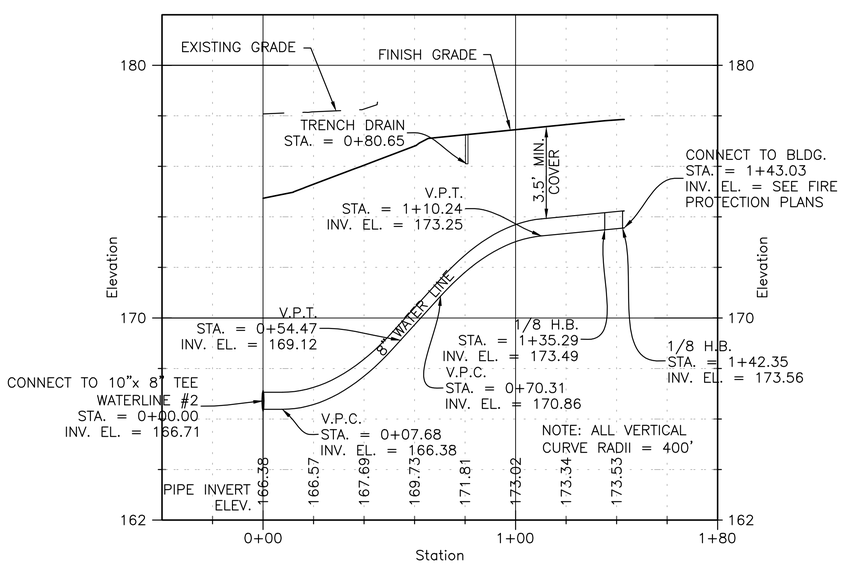

WATERLINE #6 0+00 – 1+43.03
HORZ. SCALE 1"= 30'
VERT. SCALE 1"= 3'

NOTE: SEE SHEET CU721 FOR WATER POINT TABLES.

			APPR
			DATE
			DESCRIPTION
			SYM

NAVFAC

COMMONWEALTH OF VIRGINIA
ALAN KARL ARNOLD
Lic. No. 029959
10-13-2016
PROFESSIONAL ENGINEER
SEAL

EWING COLE
Federal Reserve Bank Building
100 North 6th Street
Philadelphia, PA 19106
Tel: 215.923.2020 Fax: 215.574.0562

STANTEC
6110 FROST PLACE
LAUREL, MD 20707
A/E INFO

APPROVED

FOR COMMANDER NAVFAC
ACTIVITY

SATISFACTORY TO DATE --/--/--

Designer JMS Author BKO Checker AKA

PM/DM
BRANCH MANAGER
CHIEF ENGI ARCH
FIRE PROTECTION

DEPARTMENT OF THE NAVY
NAVAL FACILITIES ENGINEERING COMMAND
DoDEA
NAVAL FACILITIES ENGINEERING COMMAND – WASHINGTON
MARINE CORPS BASE QUANTICO, VIRGINIA
MARINE CORPS BASE QUANTICO
QUANTICO, VA
REPLACE QUANTICO M/H SCHOOL
WATER LINE PROFILES

SCALE: 1" = 30'
PROJECT NO.: P-021
CONSTR. CONTR. NO.
W91236-15-C-0023
NAVFAC DRAWING NO.
13090839
SHEET 85 OF 789
CU333

DRAWFORM REVISION: 10 MARCH 2009

RTA SUBMISSION - 10/13/2016

END-SECTION 12" - 60" PIPE

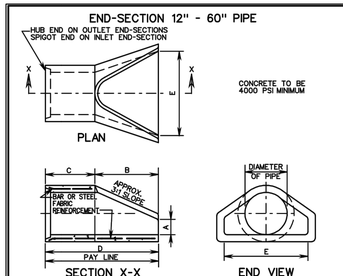

END SECTION DIMENSIONS

PIPE DIAMETER	A	B	C	D	E
12"	4"	2'-0"	2'-0"	4'-0"	2'-0"
15"	6"	2'-3"	1'-9"	4'-0"	2'-6"
18"	9"	2'-3"	1'-9"	4'-0"	3'-0"
21"	9"	2'-11"	2'-1"	5'-0"	3'-6"
24"	9"	3'-7"	2'-6"	6'-1"	4'-0"
27"	10½"	4'-0"	2'-1"	6'-1"	4'-6"
30"	1'-0"	4'-6"	1'-7¾"	6'-1½"	5'-0"
33"	1'-1½"	4'-10½"	2'-3¼"	7'-1½"	5'-6"
36"	1'-3"	5'-3"	2'-10¾"	8'-1½"	6'-0"
42"	1'-9"	5'-3"	2'-11"	8'-2"	6'-6"
48"	2'-0"	6'-0"	2'-2"	8'-2"	7'-0"
54"	2'-3"	5'-5"	2'-9¼"	8'-2¼"	7'-6"
60"	2'-11"	5'-0"	3'-3"	8'-3"	8'-0"

ALTERNATE END-SECTION 12" - 60" PIPE

ES-1

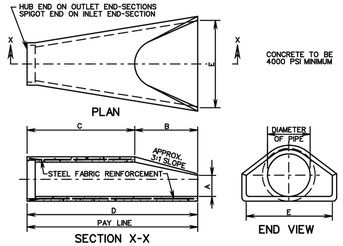

END SECTION DIMENSIONS

PIPE DIAMETER	A	B	C	D	E
12"	4"	2'-0"	4'-1"	6'-1"	2'-0"
15"	6"	2'-3"	3'-10"	6'-1"	2'-6"
18"	9"	2'-3"	3'-10"	6'-1"	3'-0"
21"	9"	2'-11"	3'-2"	6'-1"	3'-6"
24"	10"	3'-7"	2'-8"	6'-3"	4'-0"
27"	10½"	4'-0"	2'-1½"	6'-1½"	4'-6"
30"	1'-0"	4'-6"	1'-7¾"	6'-1½"	5'-0"
33"	1'-1½"	4'-10½"	3'-3¼"	8'-1½"	5'-6"
36"	1'-3"	5'-3"	2'-10¾"	8'-1½"	6'-0"
42"	1'-9"	5'-3"	2'-11"	8'-2"	6'-6"
48"	2'-0"	6'-0"	2'-2"	8'-2"	7'-0"
54"	2'-3"	5'-5"	2'-11"	8'-4"	7'-6"
60"	2'-6"	5'-0"	3'-3"	8'-3"	8'-0"

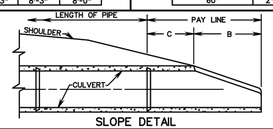

NOTES:

PIPE LENGTHS SHOWN ON PLANS ARE BASED ON END-SECTION DESIGN SHOWN ON THE LEFT. IF THE CONTRACTOR ELECTS TO USE THE ALTERNATE DESIGN SHOWN ON THE RIGHT LENGTHS WILL BE REDUCED BY THE DIFFERENCE IN DIMENSION "D".

SPECIFICATION REFERENCE: 302

1 / CU701 — FLARED END SECTION — 12" - 60" CONCRETE PIPE CULVERTS — N.T.S.

VIRGINIA DEPARTMENT OF TRANSPORTATION

VDOT ROAD AND BRIDGE STANDARDS — REVISION DATE — SHEET 1 OF 1 — 102.01

T-MH-2

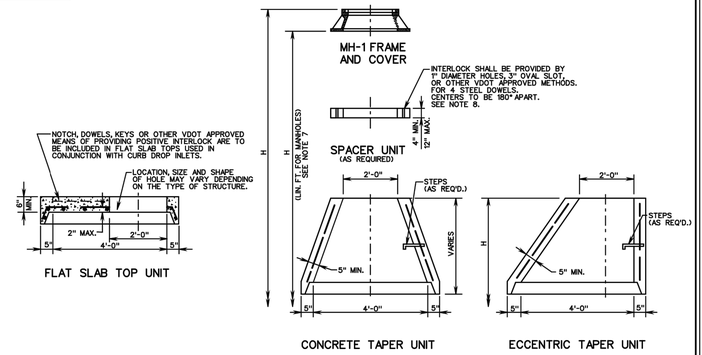

NOTES:

1. SEE GENERAL NOTES FOR ADDITIONAL INFORMATION ON WEEP HOLES, STEP REQUIREMENTS, "H" (LIN. FT. FOR MANHOLES) DIMENSION, ETC.
2. ALL SPACER UNITS, FLAT SLAB TOPS, AND TAPER UNITS ARE TO BE IN ACCORDANCE WITH THE REQUIREMENTS OF AASHTO M199.
3. CONCRETE SHALL BE 4000 PSI.
4. FOR STEP DETAILS SEE STANDARD ST-1.
5. DIMENSIONS SHOWN ARE MINIMUM. ACTUAL DIMENSIONS MAY VARY WITH MANUFACTURER.
6. SPACER UNITS SHOWN HEREON ARE ALSO KNOWN AS "GRADE RINGS" OR ADJUSTMENT RINGS".
7. WHEN SPACER UNITS ARE REQUIRED, "H" IS TO BE MEASURED FROM THE TOP OF THE UPPERMOST SPACER.
8. SPACER UNIT IS TO BE DOWELED OR MORTARED TO TAPER UNIT OR FLAT SLAB TOP.

VDOT ROAD AND BRIDGE STANDARDS — SHEET 1 OF 1 — REVISION DATE — 103.09

2 / CU701 — STANDARD PRECAST MANHOLE TOP UNITS — N.T.S.

VIRGINIA DEPARTMENT OF TRANSPORTATION

SPECIFICATION REFERENCE: 105, 302

R-1,2,3

DIMENSIONS	
D	MIN. X
60"	5"
72"	6"
84"	7"
96"	8"

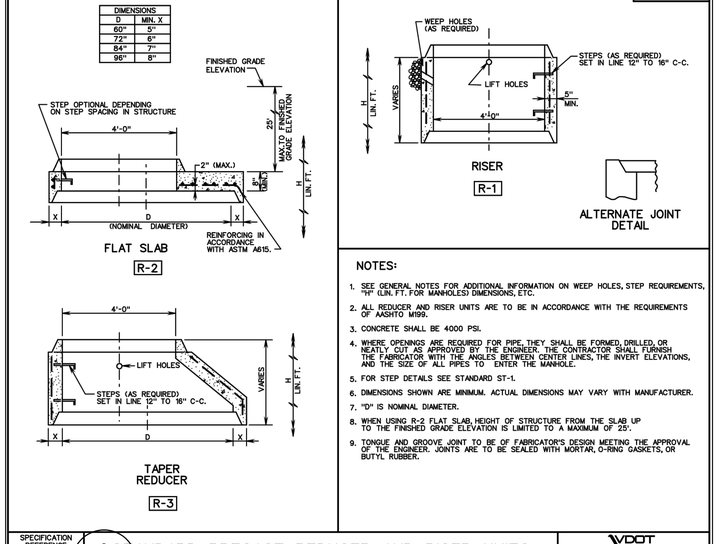

NOTES:

1. SEE GENERAL NOTES FOR ADDITIONAL INFORMATION ON WEEP HOLES, STEP REQUIREMENTS, "H" (LIN. FT. FOR MANHOLES) DIMENSIONS, ETC.
2. ALL REDUCER AND RISER UNITS ARE TO BE IN ACCORDANCE WITH THE REQUIREMENTS OF AASHTO M199.
3. CONCRETE SHALL BE 4000 PSI.
4. WHERE OPENINGS ARE REQUIRED FOR PIPE, THEY SHALL BE FORMED, DRILLED, OR NEATLY CUT AS APPROVED BY THE ENGINEER. THE CONTRACTOR SHALL FURNISH THE FABRICATOR WITH THE ANGLES BETWEEN CENTER LINES, THE INVERT ELEVATIONS, AND THE SIZE OF ALL PIPES TO ENTER THE MANHOLE.
5. FOR STEP DETAILS SEE STANDARD ST-1.
6. DIMENSIONS SHOWN ARE MINIMUM. ACTUAL DIMENSIONS MAY VARY WITH MANUFACTURER.
7. "D" IS NOMINAL DIAMETER.
8. WHEN USING R-2 FLAT SLAB, HEIGHT OF STRUCTURE FROM THE SLAB UP TO THE FINISHED GRADE ELEVATION IS LIMITED TO A MAXIMUM OF 25'.
9. TONGUE AND GROOVE JOINT TO BE OF FABRICATOR'S DESIGN MEETING THE APPROVAL OF THE ENGINEER. JOINTS ARE TO BE SEALED WITH MORTAR, O-RING GASKETS, OR BUTYL RUBBER.

SPECIFICATION REFERENCE: 105, 302

3 / CU701 — STANDARD PRECAST REDUCER AND RISER UNITS — N.T.S.

VIRGINIA DEPARTMENT OF TRANSPORTATION

VDOT ROAD AND BRIDGE STANDARDS — REVISION DATE — SHEET 1 OF 1 — 103.10

B-1, B-2

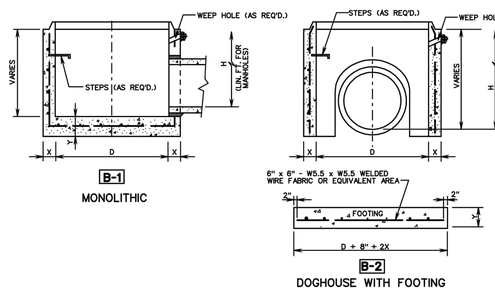

NOTES:

1. SEE GENERAL NOTES FOR ADDITIONAL INFORMATION ON WEEP HOLES, STEP REQUIREMENTS, "H" (LIN. FT. FOR MANHOLES) DIMENSIONS, ETC.
2. ALL BASE UNITS ARE TO BE IN ACCORDANCE WITH THE REQUIREMENTS OF AASHTO M199.
3. CONCRETE SHALL BE 4000 PSI.
4. WHERE OPENINGS ARE REQUIRED FOR PIPE, THEY SHALL BE FORMED, DRILLED, OR NEATLY CUT AS APPROVED BY THE ENGINEER. THE CONTRACTOR SHALL FURNISH THE FABRICATOR WITH THE ANGLES BETWEEN CENTER LINES, THE INVERT ELEVATIONS, AND THE SIZE OF ALL PIPES TO ENTER THE MANHOLE. HOLES ARE TO BE A MINIMUM OF 4" TO A MAXIMUM OF 8" LARGER THAN THE OUTSIDE DIAMETER OF THE PROPOSED PIPE.
5. DIMENSIONS SHOWN ARE MINIMUM. ACTUAL DIMENSIONS MAY VARY WITH MANUFACTURER.
6. "D" IS NOMINAL DIAMETER.
7. IN THE EVENT THE INVERT OF THE OUTFALL PIPE IS HIGHER THAN THE BOTTOM OF THE STRUCTURE, THE INVERT OF THE STRUCTURE SHALL BE SHAPED WITH CEMENT MORTAR TO PREVENT STANDING OR PONDING OF WATER IN THE STRUCTURE.
8. TONGUE AND GROOVE JOINT ARE TO BE OF FABRICATOR'S DESIGN MEETING VDOT APPROVAL. JOINTS ARE TO BE SEALED WITH MORTAR, O-RING GASKETS, OR BUTYL RUBBER.

DIMENSIONS				
D	X MINIMUM	Y MINIMUM	SUGGESTED MAX. PIPE SIZE	ABSOLUTE MAXIMUM ☆
✱ 36"	4"	6"	18"	21"
48"	5"	6"	24"	27"
60"	5"	8"	36"	42"
72"	6"	8"	48"	54"
84"	7"	8"	60"	66"
96"	8"	8"	66"	72"

✱ DEPTH "H" OF 36" DIAMETER BASE UNIT RESTRICTED TO 4'-0" MAXIMUM.

☆ ONE THROUGH PIPE ONLY. (ONE PIPE ENTERING AND ONE PIPE EXITING STRUCTURE)

VDOT ROAD AND BRIDGE STANDARDS — SHEET 1 OF 1 — REVISION DATE — 103.11

4 / CU701 — STANDARD PRECAST BASE UNITS — N.T.S.

VIRGINIA DEPARTMENT OF TRANSPORTATION

SPECIFICATION REFERENCE: 105, 302

DI-1

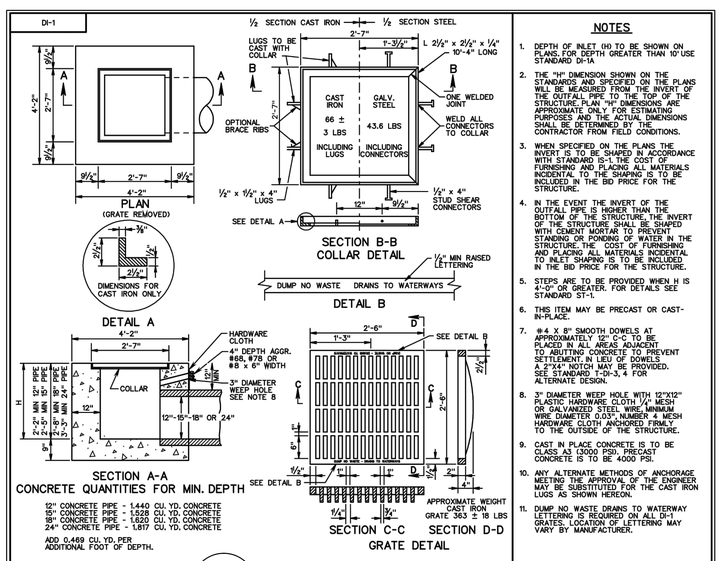

NOTES

1. DEPTH OF INLET (H) TO BE SHOWN ON PLANS. FOR DEPTH GREATER THAN 10' USE STANDARD DI-1A
2. THE "H" DIMENSION SHOWN ON THE STANDARDS AND SPECIFIED ON THE PLANS WILL BE MEASURED FROM THE INVERT OF THE OUTFALL PIPE TO THE TOP OF THE STRUCTURE. PLAN "H" DIMENSIONS ARE APPROXIMATE ONLY FOR ESTIMATING PURPOSES AND THE ACTUAL DIMENSIONS SHALL BE DETERMINED BY THE CONTRACTOR FROM FIELD CONDITIONS.
3. WHEN SPECIFIED ON THE PLANS THE INVERT IS TO BE SHAPED IN ACCORDANCE WITH STANDARD IS-1. THE COST OF FURNISHING AND PLACING ALL MATERIALS INCIDENTAL TO THE SHAPING IS TO BE INCLUDED IN THE BID PRICE FOR THE STRUCTURE.
4. IN THE EVENT THE INVERT OF THE OUTFALL PIPE IS HIGHER THAN THE BOTTOM OF THE STRUCTURE, THE INVERT OF THE STRUCTURE SHALL BE SHAPED WITH CEMENT MORTAR TO PREVENT STANDING OR PONDING OF WATER IN THE STRUCTURE. THE COST OF FURNISHING AND PLACING ALL MATERIALS INCIDENTAL TO INLET SHAPING IS TO BE INCLUDED IN THE BID PRICE FOR THE STRUCTURE.
5. STEPS ARE TO BE PROVIDED WHEN H IS 4'-0" OR GREATER. FOR DETAILS SEE STANDARD ST-1.
6. THIS ITEM MAY BE PRECAST OR CAST-IN-PLACE.
7. #4 X 8" SMOOTH DOWELS AT APPROXIMATELY 12" C-C TO BE PLACED IN ALL AREAS ADJACENT TO ABUTTING CONCRETE TO PREVENT SETTLEMENT. IN LIEU OF DOWELS A 2"X4" NOTCH MAY BE PROVIDED. SEE STANDARD T-DI-3, 4 FOR ALTERNATE DESIGN.
8. 3" DIAMETER WEEP HOLE WITH 12"X12" PLASTIC HARDWARE CLOTH 1/4" MESH OR GALVANIZED STEEL WIRE, MINIMUM WIRE DIAMETER 0.035", NUMBER 4 MESH HARDWARE CLOTH ANCHORED FIRMLY TO THE OUTSIDE OF THE STRUCTURE.
9. CAST IN PLACE CONCRETE IS TO BE CLASS A3 (3000 PSI). PRECAST CONCRETE IS TO BE 4000 PSI.
10. ANY ALTERNATE METHODS OF ANCHORAGE MEETING THE APPROVAL OF THE ENGINEER MAY BE SUBSTITUTED FOR THE CAST IRON LUGS AS SHOWN HEREON.
11. DUMP NO WASTE DRAINS TO WATERWAY. LETTERING IS REQUIRED ON ALL DI-1 GRATES. LOCATION OF LETTERING MAY VARY BY MANUFACTURER.

VDOT ROAD AND BRIDGE STANDARDS — SHEET 1 OF 1 — REVISION DATE — 104.01

5 / CU701 — STANDARD DROP INLET — 12" - 24" PIPE: MAXIMUM DEPTH (H) = 10' — N.T.S.

VIRGINIA DEPARTMENT OF TRANSPORTATION

SPECIFICATION REFERENCE: 233, 302

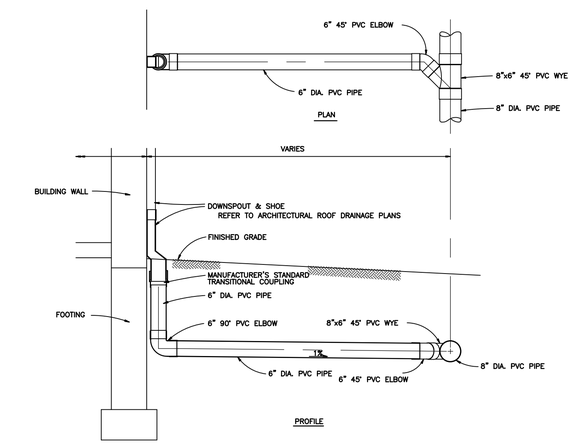

6 / CU101 — TYPICAL ROOF DRAIN DETAIL — N.T.S.

APPR | DATE | DESCRIPTION | SYM

NAVFAC

COMMONWEALTH OF VIRGINIA — ALAN KARL ARNOLD — Lic. No. 029959 — 10-13-2016 — PROFESSIONAL ENGINEER — SEAL

EWING COLE
Federal Reserve Bank Building
100 North 6th Street
Philadelphia, PA 19106
Tel: 215.923.2020 Fax: 215.574.0562

STANTEC
6110 FROST PLACE
LAUREL, MD 20707

A/E INFO

APPROVED

FOR COMMANDER NAVFAC
ACTIVITY

SATISFACTORY TO DATE -/-/-

Designer JMS Author BKO Checker AKA

PM/DM
BRANCH MANAGER
CHIEF ENG/ ARCH
FIRE PROTECTION

DEPARTMENT OF THE NAVY
NAVAL FACILITIES ENGINEERING COMMAND
DoDEA
NAVAL FACILITIES ENGINEERING COMMAND – WASHINGTON
MARINE CORPS BASE QUANTICO, VIRGINIA
MARINE CORPS BASE QUANTICO
QUANTICO, VA

REPLACE QUANTICO M/H SCHOOL

STORM DRAIN DETAILS

SCALE: 1" = 30'
PROJECT NO.: P-021
CONSTR. CONTR. NO. W91236-15-C-0023
NAVFAC DRAWING NO. 13090840
SHEET 86 OF 789
CU501

DRAWFORM REVISION: 10 MARCH 2009

RTA SUBMISSION - 10/13/2016

DI-2A, 2B, 2C

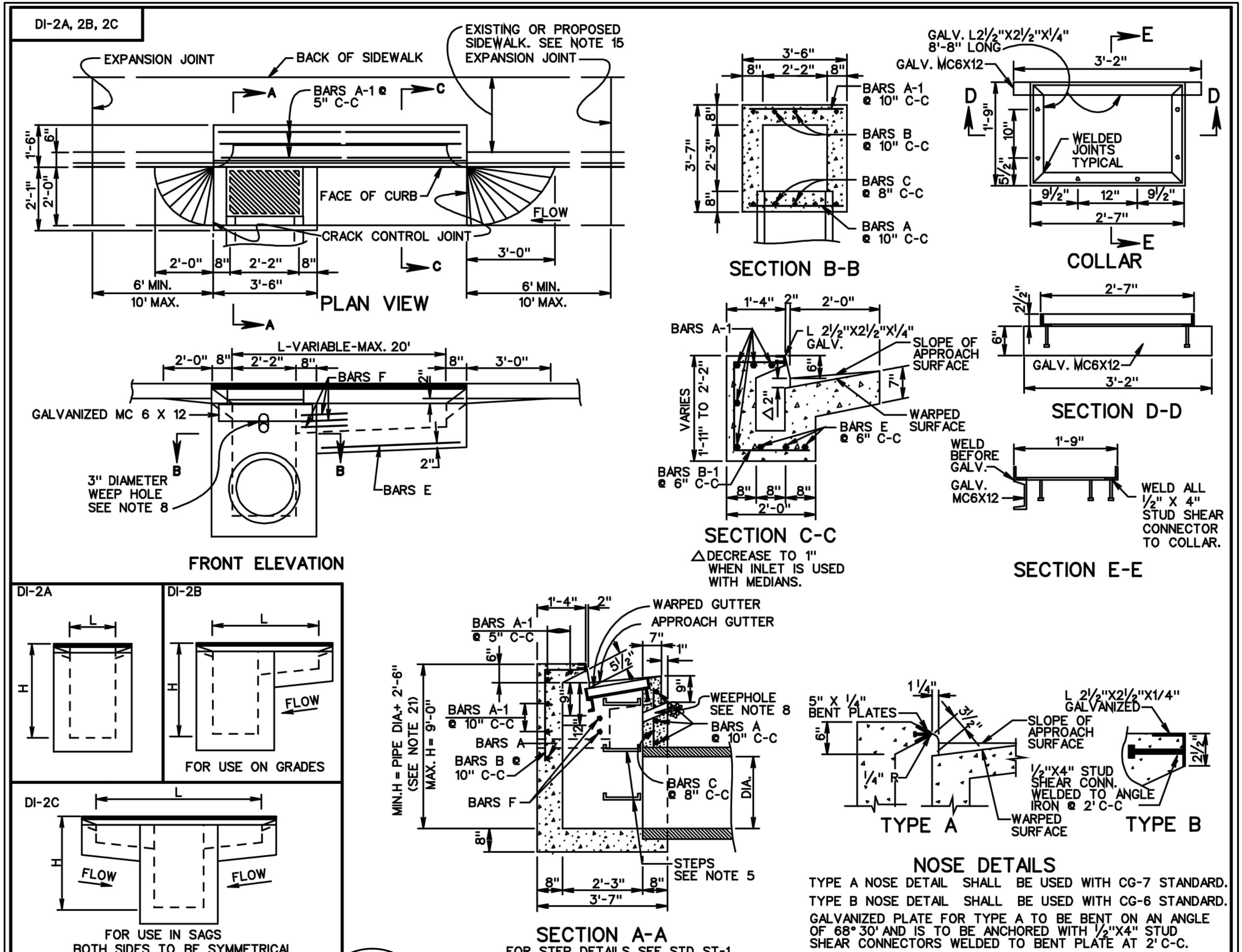

NOSE DETAILS

TYPE A NOSE DETAIL SHALL BE USED WITH CG-7 STANDARD.
TYPE B NOSE DETAIL SHALL BE USED WITH CG-6 STANDARD.
GALVANIZED PLATE FOR TYPE A TO BE BENT ON AN ANGLE OF 68° 30' AND IS TO BE ANCHORED WITH ½"X4" STUD SHEAR CONNECTORS WELDED TO BENT PLATE AT 2' C-C.

VDOT ROAD AND BRIDGE STANDARDS — SHEET 1 OF 2 — 104.03 — REVISION DATE

1 / CU701 — STANDARD CURB DROP INLET
12" - 24" PIPE: MAXIMUM DEPTH (H) = 9' N.T.S.
VIRGINIA DEPARTMENT OF TRANSPORTATION
SPECIFICATION REFERENCE 233 302

DI-2AA, 2BB, 2CC

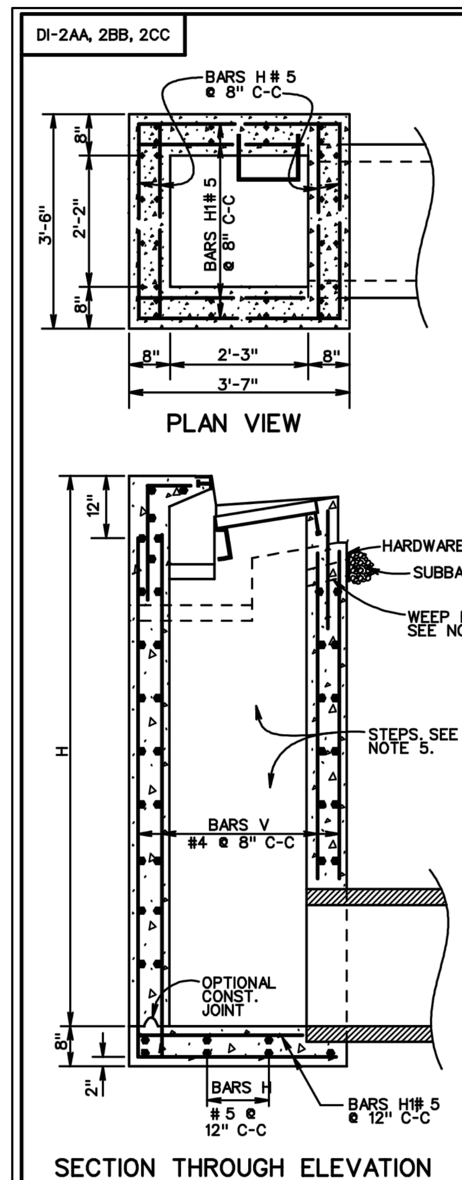

NOTES

1. DEPTH OF INLET (H) TO BE SHOWN ON PLANS. MAXIMUM DEPTH (H) TO BE 20'. FOR DEPTHS LESS THAN 9' USE STANDARD DI-2A, 2B OR 2C.
2. THE "H" DIMENSION SHOWN ON THE STANDARDS AND SPECIFIED ON THE PLANS WILL BE MEASURED FROM THE INVERT OF THE OUTFALL PIPE TO THE TOP OF THE STRUCTURE. PLAN "H" DIMENSIONS ARE APPROXIMATE ONLY FOR ESTIMATING PURPOSES AND THE ACTUAL DIMENSIONS SHALL BE DETERMINED BY THE CONTRACTOR FROM FIELD CONDITIONS.
3. WHEN SPECIFIED ON THE PLANS THE INVERT IS TO BE SHAPED IN ACCORDANCE WITH STANDARD IS-1. THE COST OF FURNISHING AND PLACING ALL MATERIALS INCIDENTAL TO THE SHAPING IS TO BE INCLUDED IN THE BID PRICE FOR THE STRUCTURE.
4. IN THE EVENT THE INVERT OF THE OUTFALL PIPE IS HIGHER THAN THE BOTTOM OF THE STRUCTURE, THE INVERT OF THE STRUCTURE SHALL BE SHAPED WITH CEMENT MORTAR TO PREVENT STANDING OR PONDING OF WATER IN THE STRUCTURE. THE COST OF FURNISHING AND PLACING ALL MATERIALS INCIDENTAL TO THE SHAPING IS TO BE INCLUDED IN THE BID PRICE FOR THE STRUCTURE.
5. STEPS ARE TO BE PROVIDED. FOR DETAILS SEE STANDARD ST-1.
6. THIS ITEM MAY BE PRECAST OR CAST-IN-PLACE.
7. #4 X 8" SMOOTH DOWELS AT APPROXIMATELY 12" C-C TO BE PLACED IN ALL AREAS ADJACENT TO ABUTTING CONCRETE TO PREVENT SETTLEMENT. IN LIEU OF DOWELS A 2" X 4" NOTCH MAY BE PROVIDED. SEE STANDARD T-DI-3, 4 FOR ALTERNATE DESIGN.
8. 3" DIAMETER WEEP HOLE IS TO BE LOCATED TO DRAIN SUBBASE MATERIAL. WEEP HOLE WITH 12" X 12" PLASTIC HARDWARE CLOTH ¼" MESH OR GALVANIZED STEEL WIRE, MINIMUM WIRE DIAMETER 0.03", NUMBER 4 MESH HARDWARE CLOTH ANCHORED FIRMLY TO THE OUTSIDE OF THE STRUCTURE.
9. ALL REINFORCING STEEL SHALL HAVE A MIN. COVER OF 2".
10. ALL REINFORCING STEEL TO BE CUT CLEAR OF ALL OPENINGS BY 2".
11. CAST-IN- PLACE CONCRETE IS TO BE CLASS A3 (3000 PSI). PRECAST CONCRETE IS TO BE 4000 PSI.
12. LENGTH OF SLOT (L) WILL, IN EVERY CASE, BE SHOWN ON PLANS.
13. THIS STANDARD IS INTENDED FOR USE IN CURB AND GUTTER SITUATIONS ONLY.
14. IF OPTIONAL CONSTRUCTION JOINT IS USED IT IS TO BE KEYED. ALL SPLICES IN BARS V TO BE A MINIMUM OF 40 DIAMETERS (20").
15. FOR PLAN VIEW OF INLET SEE STANDARD DI-2A, 2B, 2C.
16. FOR DESCRIPTION AND LOCATION OF DIMENSION L SEE SHEET 104.03.
17. FOR NUMBER OF BARS A-F REQUIRED AND LENGTHS SEE SHEET 104.04.
18. QUANTITIES SHOWN ARE FOR MINIMUM INLETS OF EACH TYPE. FOR INLETS OF GREATER DEPTHS (H) OR LONGER SLOTS (L) INCREMENTS SHOWN PER FOOT MUST BE ADDED. THE AMOUNT OF CONCRETE AND STEEL DISPLACED BY PIPES MUST BE DEDUCTED TO OBTAIN TRUE QUANTITIES.
19. FOR DETAILS AND DIMENSIONS OF CURB, SLOT, BEAM, COLLAR AND GRATE, DROPPED GUTTER LINE, AND REINFORCING AND STRUCTURAL STEEL NOT DETAILED SEE STANDARD DI-2A.

INCREMENTS TO BE ADDED FOR EACH ADDITIONAL FEET OF DEPTH (H) AND, OR SLOT LENGTH (L)

H		L	
CONCRETE	STEEL	CONCRETE	STEEL
Cu. Yds.	Lbs.	Cu. Yds.	Lbs.
0.28	64	-	-
0.28	64	0.16	17
0.28	64	0.16	17

APPROXIMATE QUANTITIES FOR MINIMUM 9' DEPTH INLET

TYPE	DIMENSION L SEE NOTE 16	REINFORCING STEEL	CONCRETE
DI-	Lin. Ft.	Lbs.	Cu. Yds.
2AA	2'-2"	609	2.77
2BB	4'-0"	647	3.06
2CC	6'-0"	685	3.38

SCHEDULE OF REINFORCING STEEL SEE NOTE 17

BARS H		BARS H1		BARS V	
NO REQ'D.	LENGTH	NO REQ'D.	LENGTH	NO REQ'D.	LENGTH
4(1.5H + 1)+8	3'-2"	4(1.5H + 1)+8	3'-3"	36	H-(1'-4")

VDOT ROAD AND BRIDGE STANDARDS — SHEET 1 OF 1 — 104.05 — REVISION DATE

2 / CU701 — STANDARD CURB DROP INLET
12" - 24" PIPE: DEPTH (H) = 9' TO 20' N.T.S.
VIRGINIA DEPARTMENT OF TRANSPORTATION
SPECIFICATION REFERENCE 233 302

MH-2

FOR DETAILS OF ALL COMPONENT PARTS AND "GENERAL NOTES- PRECAST" SEE SHEETS 103.01-103.11

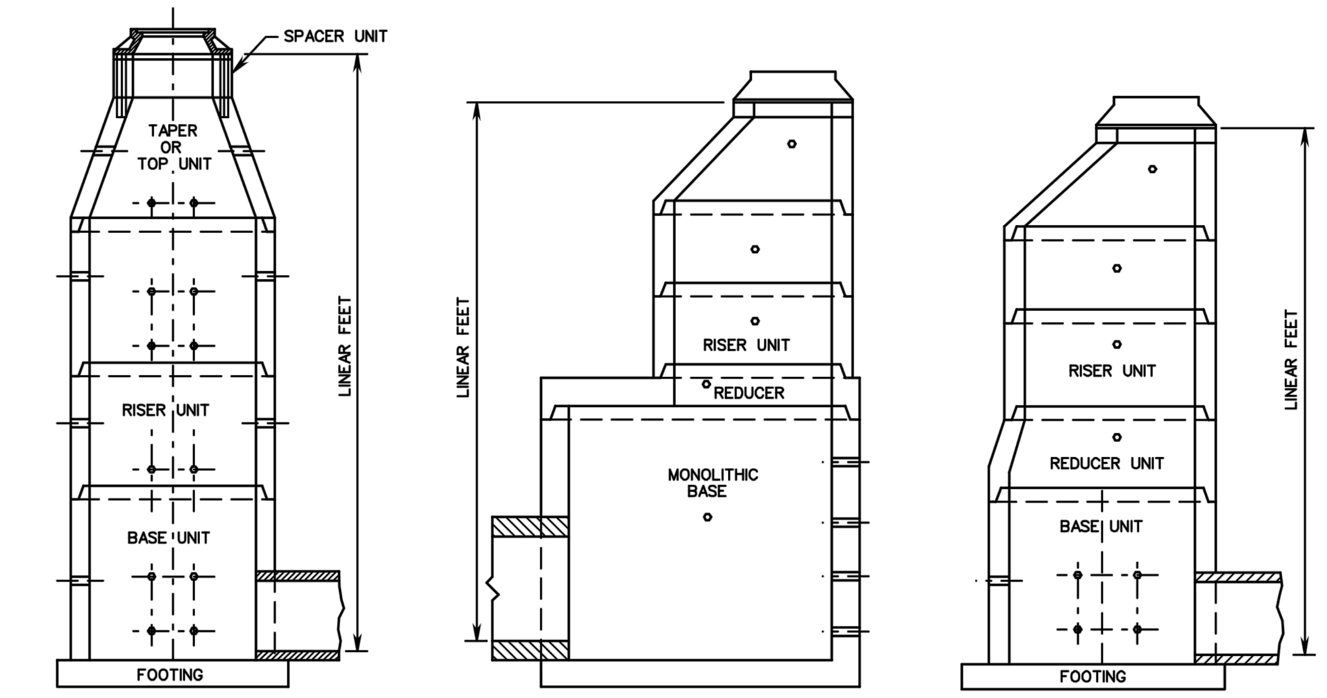

SPECIFICATION REFERENCE 105 302

3 / CU701 — PRECAST MANHOLE
VIRGINIA DEPARTMENT OF TRANSPORTATION N.T.S.
VDOT ROAD AND BRIDGE STANDARDS — REVISION DATE — SHEET 1 OF 1 — 106.07

EW-1,1A

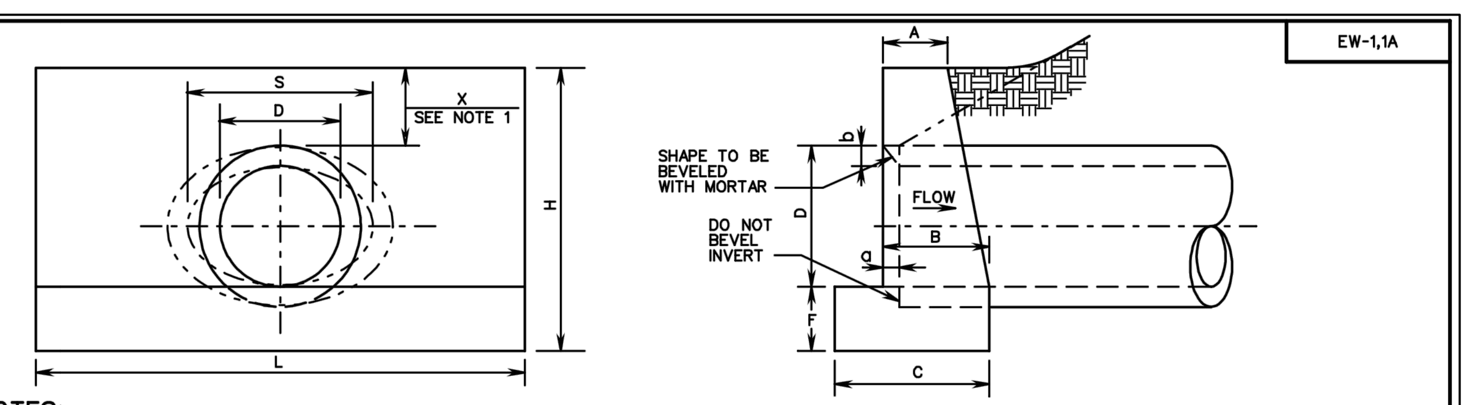

NOTES:
1. "H" MAY BE REDUCED UNTIL "X" REACHES A MINIMUM OF 4" WHERE ENDWALL WOULD PROTRUDE ABOVE SHOULDER LINE. IN NO CASE SHALL TOP OF ENDWALL PROJECT ABOVE FILL SLOPE, DITCH SLOPE, OR SHOULDER.
2. THIS ITEM MAY BE PRECAST OR CAST IN PLACE.
3. ALL CAST IN PLACE CONCRETE TO BE CLASS A3. FOR PRECAST SEE SHEET 101.02.
4. THIS STANDARD TO BE USED WITH STRAIGHT CROSSINGS AND ALL SKEWS(0° TO 45°).
5. HEADWALL TO BE BEVELED IN ALL AREAS EXCEPT WHERE A CONFLICT WITH INVERT OR WINGWALLS OCCUR
6. BEVEL EDGE IS REQUIRED ON THE HEADWALL AT THE INLET END OF THE CULVERT (WHERE THE FLOW ENTERS THE CULVERT).
7. HEADWALL AT THE OUTLET END OF THE CULVERT MAY BE EITHER SQUARE EDGE OR BEVEL EDGE.
8. ON SHALLOW FILLS, WHERE ENDWALLS ARE 1' OR LESS BELOW SHOULDER LINE, THE TOP OF THE ENDWALL SHALL BE CONSTRUCTED PARALLEL TO THE GRADE OF THE ROAD.
9. ¾" CHAMFER MAY BE PROVIDED ON ALL EDGES AT MANUFACTURER'S OPTION.

EW-1

ENDWALL FOR CIRCULAR PIPE — DIAMETER OF PIPE CULVERT

	12"	15"	18"	21" OR 24"	27" OR 30"	33" OR 36"
A	0'-6"	0'-8"	0'-9"	0'-11"	1'-0"	1'-0"
B	0'-11"	1'-1"	1'-3"	1'-6"	1'-9"	2'-0"
C	1'-4"	1'-7"	1'-9"	2'-2"	2'-6"	2'-9"
D	1'-0"	1'-3"	1'-6"	2'-0"	2'-6"	3'-0"
F	0'-6"	0'-8"	0'-8"	0'-9"	0'-9"	0'-9"
H	2'-3"	2'-11"	3'-2"	3'-9"	4'-3"	4'-9"
L	4'-0"	5'-0"	6'-0"	8'-0"	10'-0"	12'-0"
a	0'-1¼"	0'-1¾"	0'-2"	0'-2½"	0'-3¼"	0'-3¾"
b	0'-1"	0'-1¼"	0'-1½"	0'-2"	0'-2½"	0'-3"
CUBIC YARDS OF CONCRETE						
CONC. PIPE	0.241	0.492	0.697	1.319	2.067	2.947
C.M. PIPE	0.257	0.521	0.739	1.398	2.198	3.145

EW-1A

ENDWALL FOR ELLIPTICAL PIPE — SIZE OF ELLIPTICAL PIPE CULVERT (SPAN x RISE)

	23"x14"	30"x19"	34"x22"	38"x24"	42"x27"	45"x29"	49"x32"	53"x34"
A	0'-8"	0'-9"	0'-10"	0'-11"	0'-11"	1'-0"	1'-0"	1'-0"
B	1'-2"	1'-5"	1'-6"	1'-8"	1'-9"	1'-10"	1'-11"	1'-11"
C	1'-8"	1'-11"	2'-1"	2'-4"	2'-5"	2'-7"	2'-8"	2'-9"
D	1'-2"	1'-7"	1'-10"	2'-0"	2'-3"	2'-5"	2'-8"	2'-10"
F	0'-8"	0'-8"	0'-9"	0'-9"	0'-9"	0'-9"	0'-9"	0'-9"
H	2'-10"	3'-3"	3'-7"	3'-9"	4'-0"	4'-2"	4'-5"	4'-7"
L	5'-5"	7'-2"	8'-6"	9'-2"	10'-2"	10'-11"	12'-1"	12'-11"
S	1'-11"	2'-6"	2'-10"	3'-2"	3'-6"	3'-9"	4'-1"	4'-5"
a	0'-2½"	0'-3¼"	0'-3½"	0'-4"	0'-4½"	0'-4¾"	0'-5"	0'-5½"
b	0'-2"	0'-2½"	0'-2¾"	0'-3"	0'-3½"	0'-3¾"	0'-4"	0'-4½"
CUBIC YARDS OF CONCRETE								
CONC.PIPE	0.502	0.855	1.236	1.500	1.811	2.101	2.512	2.801

SPECIFICATION REFERENCE 105 302

4 / CU701 — STANDARD ENDWALL FOR PIPE CULVERTS
12" - 36" CIRCULAR AND 23" x 14" - 53" x 34" ELLIPTICAL PIPES N.T.S.
VIRGINIA DEPARTMENT OF TRANSPORTATION
VDOT ROAD AND BRIDGE STANDARDS — REVISION DATE — SHEET 1 OF 1 — 101.01

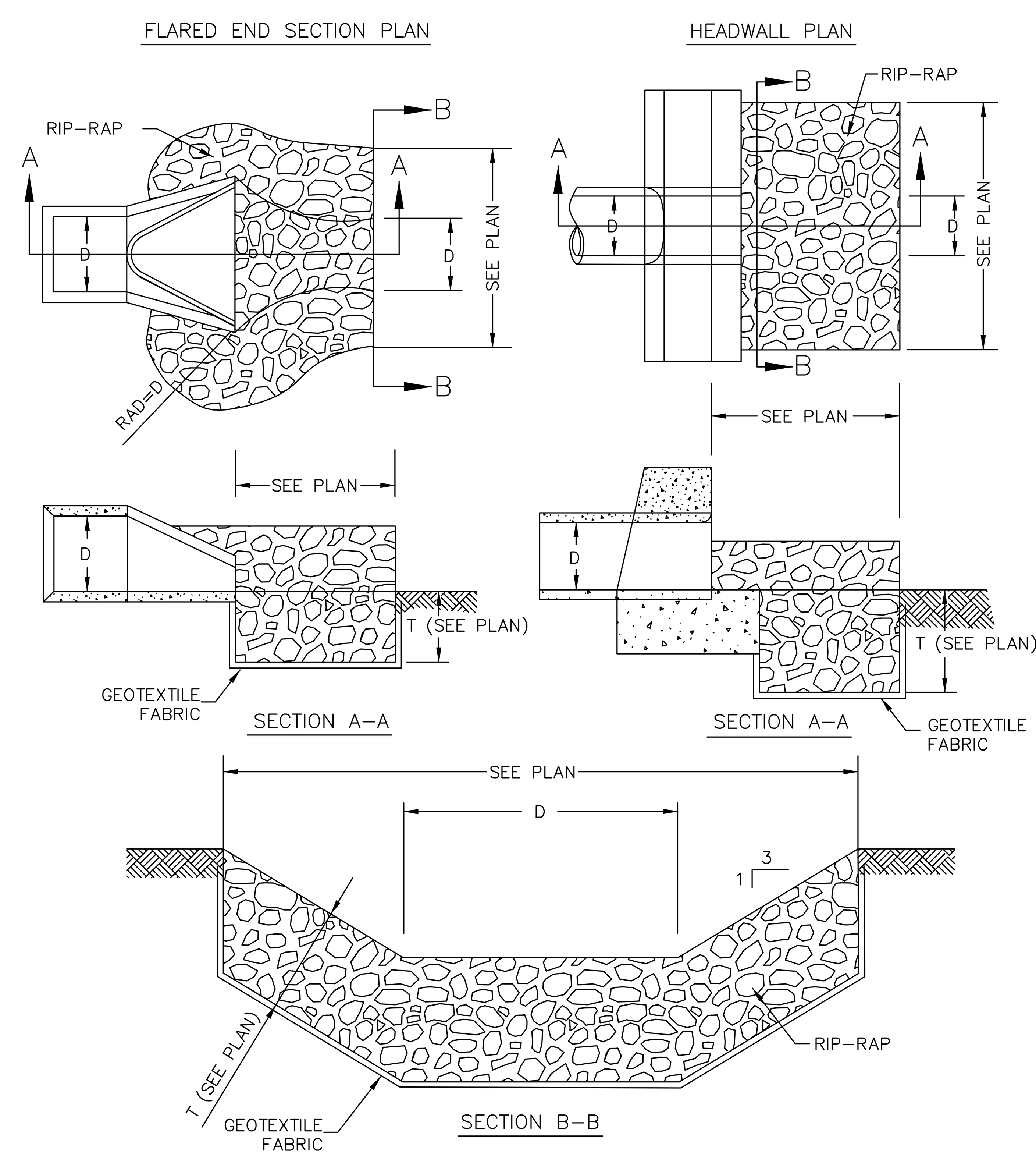

5 / CU101 — RIPRAP OUTLET N.T.S.
CU102
CU103

JB-1

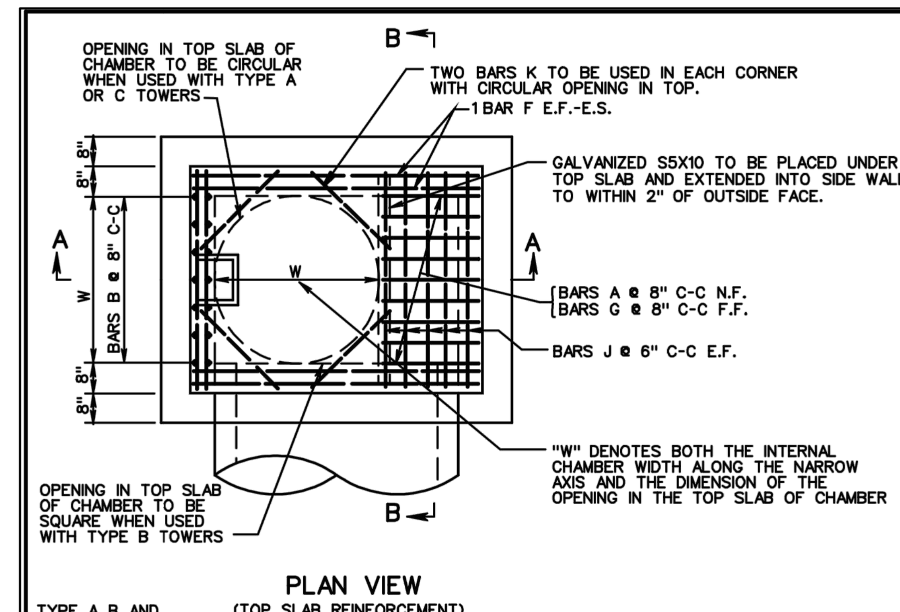

NOTES:
1. ALL REINFORCING STEEL TO BE #6 BARS WITH A MINIMUM 1½" CONCRETE COVER.
2. ANY REINFORCING BARS IN CONFLICT WITH PIPE SHELLS ARE TO BE CUT A MINIMUM OF 1½" FROM PIPE.
3. FOR DETAILS METHOD OF TURNING ANGLES AND APPROXIMATE QUANTITIES SEE SHEET 2 OF 4.
4. PRECAST CHAMBERS OF THE BOLT TOGETHER TYPE MAY BE SUBSTITUTED WHEN APPROVED ON AN INDIVIDUAL BASIS.
5. ALL CONCRETE TO BE CLASS A3 IF CAST IN PLACE, 4000 PSI IF PRECAST.
6. THIS ITEM MAY BE PRECAST OR CAST IN PLACE.
7. ELIMINATE DOWELS WHEN PRECAST TYPE A TOWER ARE ELECTED.
8. WHEN SPECIFIED ON PLANS INVERT IS TO BE SHAPED IN ACCORDANCE WITH STANDARD IS-1. THE MATERIALS INCIDENTAL TO THE SHAPING ARE NOT TO BE MEASURED OR PAID SEPARATELY BUT THE COST OF SAME IS TO BE INCLUDED IN THE PRICE BID PER CUBIC YARD OF JUNCTION BOX CONCRETE

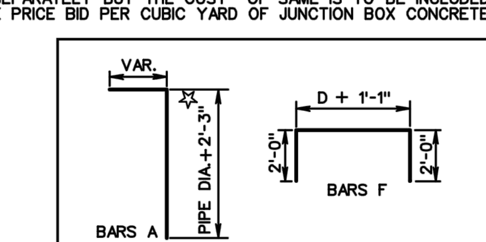

☆INCREASE INDICATED DIMENSION BY 1' FOR USE WITH 72" PIPE.
THE LENGTH OF ALL BARS AND THE NUMBER REQUIRED WILL VARY WITH THE SIZE OF CHAMBER . FOR APPROXIMATE WEIGHT SEE SHEET 2 AND 4 OF THIS STANDARD.
BARS B, C, E, G, H, AND J ARE STRAIGHT.

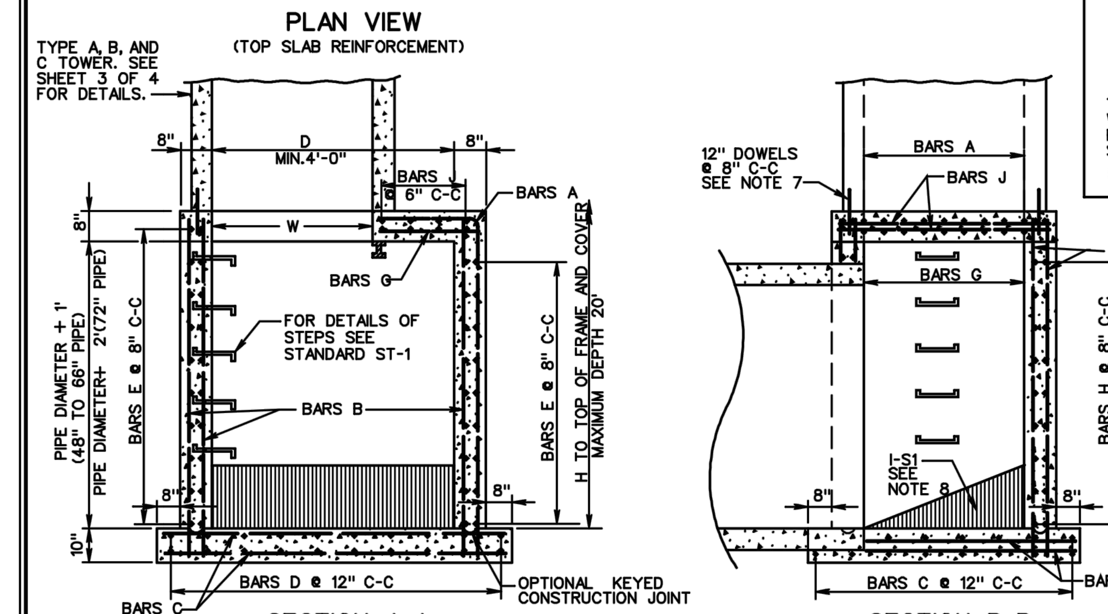

SHEET 1 OF 4

SPECIFICATION REFERENCE 105 233 302

JUNCTION BOX CHAMBER DETAILS FOR 48" - 72" PIPE CULVERTS MAXIMUM DEPTH (H) = 20'
VIRGINIA DEPARTMENT OF TRANSPORTATION — 106.10

6 / CU102 — MODIFIED JUNCTION BOX INLET (VDOT 106.10) N.T.S.
CU103

NOTES:
1. INSIDE DIMENSIONS OF BOX: 4'–0" X 4'–0"
2. PROVIDE 4'–0" X 0'–6" SLOT OPENING ON EACH SIDE. SEE "BIORETENTION TABLE" ON SHEET CU511 FOR SLOT CREST ELEVATIONS, AND SEE STORM PROFILES FOR TOP OF STRUCTURE ELEVATIONS.
3. ELIMINATE TOWER AND REPLACE WITH 2'–0" STANDARD MANHOLE FRAME AND COVER. OPENING IN TOP SLAB "W" IS 2'–0".

RTA SUBMISSION - 10/13/2016

SYM | DESCRIPTION | DATE | APPR
NAVFAC
COMMONWEALTH OF VIRGINIA — ALAN KARL ARNOLD — Lic. No. 029959 — 10-13-2016 — PROFESSIONAL ENGINEER — SEAL
EWING COLE — Federal Reserve Bank Building, 100 North 6th Street, Philadelphia, PA 19106, Tel: 215.923.2020 Fax: 215.574.0952
STANTEC — 6110 FROST PLACE, LAUREL, MD 20707 — A/E INFO
APPROVED
FOR COMMANDER NAVFAC
ACTIVITY
SATISFACTORY TO DATE --/--/--
Designer JMS Author BKO Checker AKA
PM/DM
BRANCH MANAGER
CHIEF ENG/ ARCH
FIRE PROTECTION

DEPARTMENT OF THE NAVY
NAVAL FACILITIES ENGINEERING COMMAND
NAVAL FACILITIES ENGINEERING COMMAND ~ WASHINGTON
DoDEA
MARINE CORPS BASE QUANTICO, VIRGINIA
MARINE CORPS BASE QUANTICO
QUANTICO, VA
REPLACE QUANTICO M/H SCHOOL
STORM DRAIN DETAILS

SCALE: 1" = 30'
PROJECT NO.: P-021
CONSTR. CONTR. NO. W91236-15-C-0023
NAVFAC DRAWING NO. 13090841
SHEET 87 OF 789
CU502

FIRST YEAR MAINTENANCE OPERATIONS

SUCCESSFUL ESTABLISHMENT OF BIORETENTION AREAS REQUIRES THAT THE FOLLOWING TASKS BE UNDERTAKEN IN THE FIRST YEAR FOLLOWING INSTALLATION:

- *INITIAL INSPECTIONS.* FOR THE FIRST 6 MONTHS FOLLOWING CONSTRUCTION, THE SITE SHOULD BE INSPECTED AT LEAST TWICE AFTER STORM EVENTS THAT EXCEED 112 INCH OF RAINFALL.
- *SPOT RESEEDING.* INSPECTORS SHOULD LOOK FOR BARE OR ERODING AREAS IN THE CONTRIBUTING DRAINAGE AREA OR AROUND THE BIORETENTION AREA, AND MAKE SURE THEY ARE IMMEDIATELY STABILIZED WITH GRASS COVER.
- *FERTILIZATION.* ONE–TIME, SPOT FERTILIZATION MAY BE NEEDED FOR INITIAL PLANTINGS.
- *WATERING.* WATERING IS NEEDED ONCE A WEEK DURING THE FIRST 2 MONTHS, AND THEN AS NEEDED DURING FIRST GROWING SEASON (APRIL–OCTOBER), DEPENDING ON RAINFALL.
- *REMOVE AND REPLACE DEAD PLANTS.* SINCE UP TO 10% OF THE PLANT STOCK MAY DIE OFF IN THE FIRST YEAR, CONSTRUCTION CONTRACTS SHOULD INCLUDE A CARE AND REPLACEMENT WARRANTY TO ENSURE THAT VEGETATION IS PROPERLY ESTABLISHED AND SURVIVES DURING THE FIRST GROWING SEASON FOLLOWING CONSTRUCTION. THE TYPICAL THRESHOLDS BELOW WHICH REPLACEMENT IS REQUIRED ARE 85% SURVIVAL OF PLANT MATERIAL AND 100% SURVIVAL OF TREES.

MAINTENANCE INSPECTIONS

IT IS HIGHLY RECOMMENDED THAT A SPRING MAINTENANCE INSPECTION AND CLEANUP BE CONDUCTED AT EACH BIORETENTION AREA. THE FOLLOWING IS A LIST OF SOME OF THE KEY MAINTENANCE PROBLEMS TO LOOK FOR:

- CHECK TO SEE IF 75% TO 90% COVER (MULCH PLUS VEGETATIVE COVER) HAS BEEN ACHIEVED IN THE BED, AND MEASURE THE DEPTH OF THE REMAINING MULCH.
- CHECK FOR SEDIMENT BUILDUP AT CURB CUTS, GRAVEL DIAPHRAGMS OR PAVEMENT EDGES THAT PREVENTS FLOW FROM GETTING INTO THE BED, AND CHECK FOR OTHER SIGNS OF BYPASSING.
- CHECK FOR ANY WINTER– OR SALT–KILLED VEGETATION, AND REPLACE IT WITH HARDIER SPECIES.
- NOTE PRESENCE OF ACCUMULATED SAND, SEDIMENT AND TRASH IN THE PRE–TREATMENT CELL OR FILTER BEDS, AND REMOVE IT.
- INSPECT BIORETENTION SIDE SLOPES AND GRASS FILTER STRIPS FOR EVIDENCE OF ANY RILL OR GULLY EROSION, AND REPAIR IT.
- CHECK THE BIORETENTION BED FOR EVIDENCE OF MULCH FLOTATION, EXCESSIVE PONDING, DEAD PLANTS OR CONCENTRATED FLOWS, AND TAKE APPROPRIATE REMEDIAL ACTION.
- CHECK INFLOW POINTS FOR CLOGGING, AND REMOVE ANY SEDIMENT.
- LOOK FOR ANY BARE SOIL OR SEDIMENT SOURCES IN THE CONTRIBUTING DRAINAGE AREA, AND STABILIZE THEM IMMEDIATELY.
- CHECK FOR CLOGGED OR SLOW–DRAINING SOIL MEDIA, A CRUST FORMED ON THE TOP LAYER, INAPPROPRIATE SOIL MEDIA, OR OTHER CAUSES OF INSUFFICIENT FILTERING TIME, AND RESTORE PROPER FILTRATION CHARACTERISTICS.

BIORETENTION INSTALLATION

1. CONSTRUCTION OF THE BIORETENTION AREA MAY ONLY BEGIN AFTER THE ENTIRE CONTRIBUTING DRAINAGE AREA HAS BEEN STABILIZATION WITH VEGETATION.
2. TEMPORARY E&S CONTROLS MAY BE NEEDED DURING CONSTRUCTION OF THE BIORETENTION AREA TO DIVERT STORMWATER AWAY FROM THE BIORETENTION AREA UNTIL IT IS COMPLETED. SPECIAL PROTECTION MEASURES SUCH AS EROSION CONTROL FABRICS MAY BE NEEDED TO PROTECT VULNERABLE SIDE SLOPES FROM EROSION DURING THE CONSTRUCTION PROCESS.
3. PRE–TREATMENT CELLS SHOULD BE EXCAVATED FIRST AND THEN SEALED TO TRAP SEDIMENTS.
4. EXCAVATION EQUIPMENT SHOULD WORK FROM THE SIDES TO EXCAVATE THE BIORETENTION AREA TO ITS APPROPRIATE DESIGN DEPTH AND DIMENSIONS. EXCAVATING EQUIPMENT SHOULD NOT SIT INSIDE THE FOOTPRINT OF THE BIORETENTION AREA. CONTRACTORS SHOULD USE A CELL CONSTRUCTION APPROACH IN LARGER BIORETENTION BASINS, WHEREBY THE BASIN IS SPLIT INTO 500 TO 1,000 SQUARE FOOT TEMPORARY CELLS WITH A 10–15 FOOT EARTH BRIDGE IN BETWEEN, SO THAT CELLS CAN BE EXCAVATED FROM THE SIDE.
5. IT MAY BE NECESSARY TO RIP THE BOTTOM SOILS TO A DEPTH OF 6 TO 12 INCHES TO PROMOTE GREATER INFILTRATION.
6. PLACE THE APPROPRIATE DEPTH OF #57 STONE ON THE BOTTOM, INSTALL THE PERFORATED UNDERDRAIN PIPE, PACK #57 STONE TO 3 INCHES ABOVE THE UNDERDRAIN PIPE, AND ADD CHOKER STONE/PEA GRAVEL AS A FILTER BETWEEN THE UNDERDRAIN AND THE SOIL MEDIA LAYER.
7. DELIVER THE SOIL MEDIA FROM AN APPROVED VENDOR, AND STORE IT ON AN ADJACENT IMPERVIOUS AREA OR PLASTIC SHEETING. APPLY THE MEDIA IN 12–INCH LIFTS UNTIL THE DESIRED TOP ELEVATION OF THE BIORETENTION AREA IS ACHIEVED. WAIT A FEW DAYS TO CHECK FOR SETTLEMENT, AND ADD ADDITIONAL MEDIA, AS NEEDED, TO ACHIEVE THE DESIGN ELEVATION.
8. PREPARE PLANTING HOLES FOR ANY TREES AND SHRUBS, INSTALL THE VEGETATION, AND WATER ACCORDINGLY.
9. INSTALL THE PLANT MATERIALS AS SHOWN IN THE LANDSCAPING PLAN, AND WATER THEM DURING WEEKS OF NO RAIN FOR THE FIRST TWO MONTHS.
10. PLACE THE SURFACE COVER.
11. CONDUCT THE FINAL CONSTRUCTION INSPECTION.

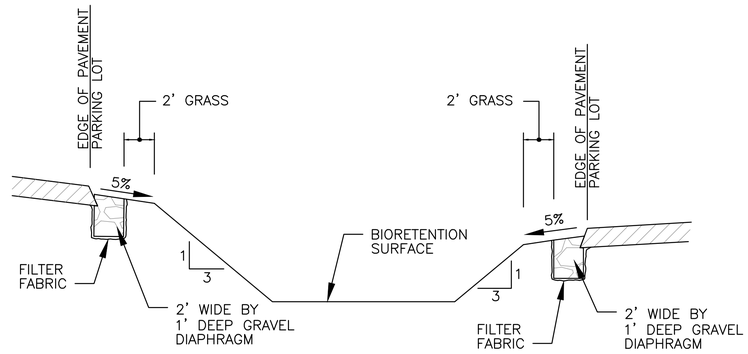

3 / CU111 — TYPICAL GRAVEL PRETREATMENT DIAPHRAGM CROSS SECTION

CU112

VERTICAL SCALE: 1"=2'
HORIZONTAL SCALE: 2"=5'

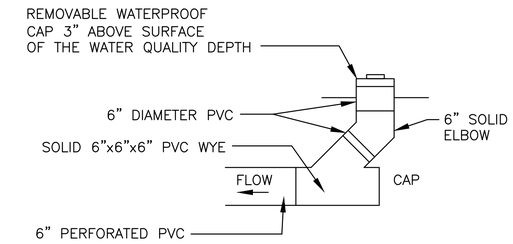

1 / CU111 — DETAIL – CLEANOUT/OBSERVATION WELL

CU112
CU113
CU114

SCALE: 1"=1'–0"

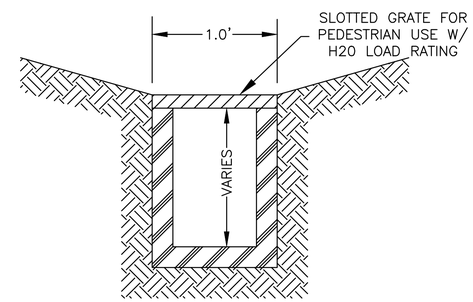

4 / CU101 — PREFABRICATED TRENCH DRAIN SECTION

CU102

SCALE: NTS

NOTE: GEOTEXTILE FABRIC SHALL BE PLACED ON THE SIDES, BUT NOT THE BOTTOM

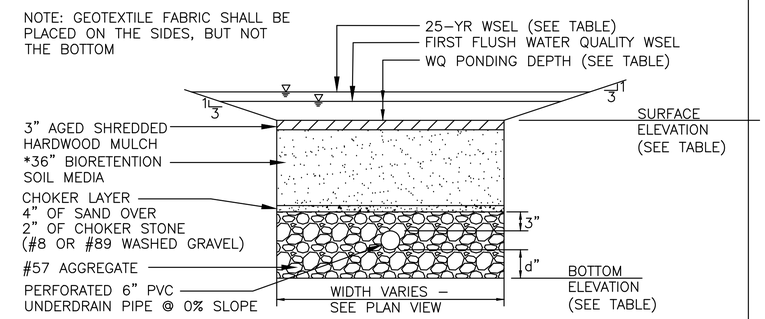

2 / CU111 — TYPICAL BIORETENTION CROSS SECTION

CU112
CU113
CU114

SCALE: NTS

* BIORETENTION SOIL MEDIA

- 85%–88% SAND
- 8%–12% SOIL FINES
- 3%–5% ORGANIC MATTER IN THE FORM OF LEAF COMPOSTING
- P–INDEX RANGE = 10–30 OR BETWEEN 7 AND 21 mg/kg OF P IN THE SOIL MEDIA
- CEC s GREATER THAN 10
- SOIL MEDIA MUST BE PROCURED FROM APPROVED FILTER MEDIA VENDOR

BIORETENTION TABLE

BMP NO.	SURFACE ELEVATION	WATER QUALITY PONDING DEPTH	10–YR WSEL	UNDERDRAIN INVERT	d (ft)	BOTTOM ELEVATION	CREST ELEVATION	SD STRUCTURE	PIPE SIZE OUT (IN)	INVERT OUT
1	175.30	0.50 FT	176.27	170.80	2.50	168.30	175.80	SD 54	18	167.64
2	175.30	0.50 FT	176.17	170.80	2.50	168.30	175.80	SD 55	15	168.69
3	175.50	0.50 FT	176.34	171.00	2.50	168.50	176.00	SD 16/17	18	167.89
4	174.90	0.50 FT	175.57	170.40	2.50	167.90	175.40	SD 52	24	166.15
5	176.00	0.50 FT	176.85	171.50	2.50	169.00	176.50	SD 53A	15	169.79
6	174.90	0.50 FT	175.87	170.40	2.50	167.90	175.40	SD 20	15	168.42
7	175.50	0.50 FT	176.15	171.00	1.50	169.50	176.00	SD 9	15	169.33
8	173.80	0.50 FT	174.42	169.30	1.50	167.80	174.30	SD 7	15	166.75
9	172.80	0.50 FT	173.39	168.30	2.50	165.80	173.30	SD 12	24	165.13
10	170.00	0.50 FT	170.56	165.50	2.50	163.00	170.50	SD 11A	15	165.09
11	167.80	0.50 FT	168.74	163.30	2.50	160.08	168.30	SD 32	24	163.19
12	173.50	0.50 FT	175.25	169.00	1.50	167.50	174.00	SD 88	18	169.24
13	169.80	1.00 FT	172.01	–	1.00	164.30	N/A	N/A	N/A	

*NO GROUNDWATER WAS ENCOUNTERED IN ANY OF THESE SOIL BORINGS

RTA SUBMISSION - 10/13/2016

NAVFAC

COMMONWEALTH OF VIRGINIA
ALAN KARL ARNOLD
Lic. No. 029959
10-13-2016
PROFESSIONAL ENGINEER
SEAL

EWING COLE
Federal Reserve Bank Building
100 North 6th Street
Philadelphia, PA 19106
Tel: 215.923.2020 Fax: 215.574.0562

STANTEC
6110 FROST PLACE
LAUREL, MD 20707
A/E INFO

APPROVED
FOR COMMANDER NAVFAC
ACTIVITY
SATISFACTORY TO DATE
Designer JMS Author BKO Checker AKA
PM/DM
BRANCH MANAGER
CHIEF ENG/ ARCH
FIRE PROTECTION

DEPARTMENT OF THE NAVY
NAVAL FACILITIES ENGINEERING COMMAND
DoDEA
NAVAL FACILITIES ENGINEERING COMMAND – WASHINGTON
MARINE CORPS BASE QUANTICO
MARINE CORPS BASE QUANTICO
QUANTICO, VA
REPLACE QUANTICO M/H SCHOOL
STORMWATER MANAGEMENT DETAILS

SCALE: AS SHOWN
PROJECT NO.: P-021
CONSTR. CONTR. NO. W91236-15-C-0023
NAVFAC DRAWING NO. 13090842
SHEET 88 OF 789
CU511

DRAWFORM REVISION: 10 MARCH 2009

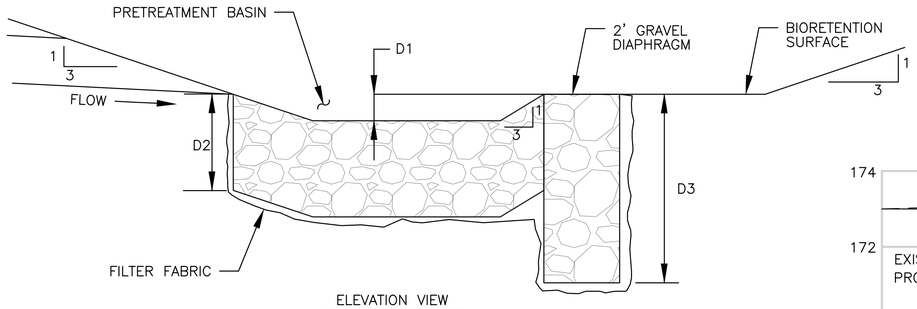

ELEVATION VIEW
SCALE 1" = 2'

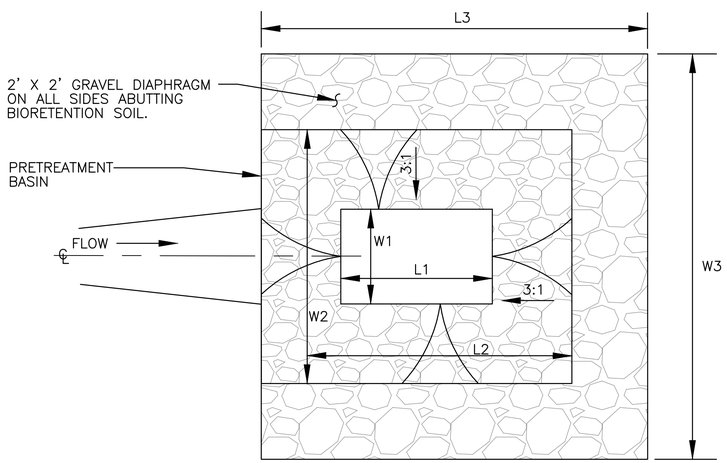

PRETREATMENT AND GRAVEL FLOW SPREADER

NOTE: SEE TABLE THIS SHEET FOR DIMENSIONS

PLAN VIEW
SCALE 1" = 2'

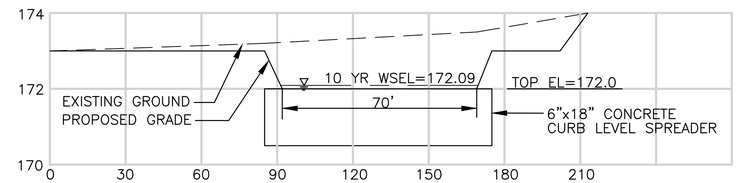

CROSS SECTION 'B'–'B' (BMP #13)
SCALE 1" = 30' HORIZONTAL
1" = 2' VERTICAL

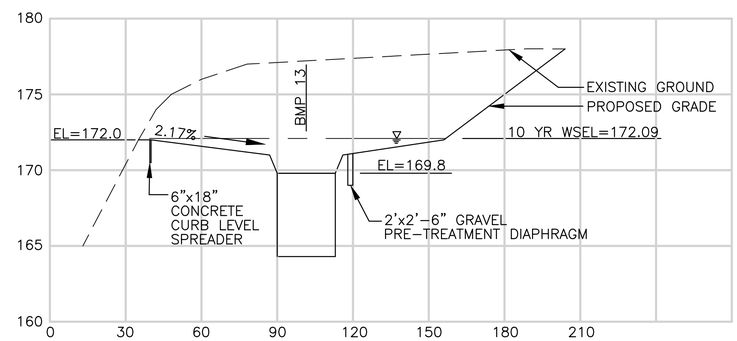

CROSS SECTION 'A'–'A' (BMP #13)
SCALE 1" = 30' HORIZONTAL
1" = 5' VERTICAL

PRETREATMENT AND GRAVEL FLOW SPREADER TABLE

BMP#	WI (FT)	LI (FT)	D1 (FT)	W2 (FT)	L2 (FT)	D2 (FT)	W3 (FT)	L3 (FT)	D3 (FT)
1	2	4	0.7	6.2	8.2	2.5	10.2	10.2	2.5
2	2	4	0.7	6.2	8.2	2.5	10.2	10.2	2.5
3	2	4	0.7	6.2	8.2	2.5	10.2	10.2	2.5
4	1	2	0.5	3	5	2.5	7	7	2.5
5	3	6	0.7	7.2	10.2	2.5	11.2	12.2	5
6	3	6	0.7	7.2	10.2	2.5	11.2	12.2	5
7	2	4	0.7	6.2	8.2	2.5	10.2	10.2	2.5
8	2	4	0.7	6.2	8.2	2.5	10.2	10.2	2.5
9A	2	4	0.7	6.2	8.2	2.5	10.2	10.2	2.5
9B	2	4	0.7	6.2	8.2	2.5	10.2	10.2	2.5
9C	1	2	0.5	3	5	2.5	7	7	2.5
10	2	4	0.7	6.2	8.2	2.5	10.2	10.2	2.5
11A	5	10	0.7	9.2	14.2	2.5	13.2	16.2	5
11B	5	10	0.7	9.2	14.2	2.5	13.2	16.2	5
12A	3	6	0.7	7.2	10.2	2.5	11.2	12.2	5
12B	3	6	0.7	7.2	10.2	2.5	11.2	12.2	5

PRETREATMENT AND GRAVEL FLOW SPREADER
N.T.S.

1
CU111
CU112
CU113
CU114

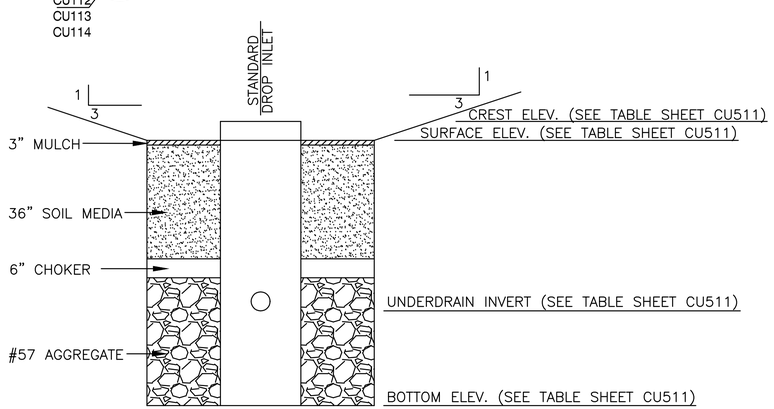

TYPICAL SECTION W/DROP INLET
SCALE 1" = 4' HORIZONTAL
1"=2' VERTICAL

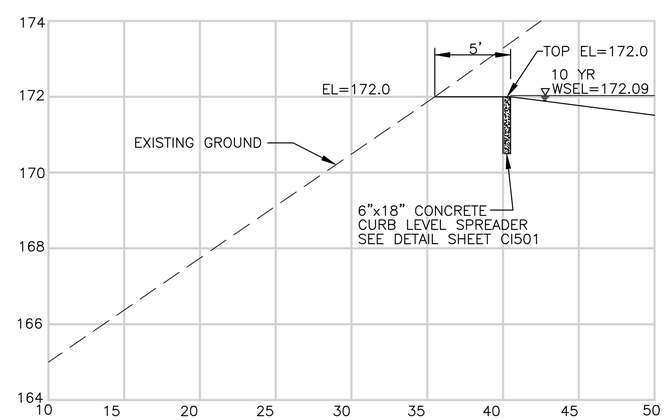

CROSS SECTION 'A'–'A' ENLARGEMENT (BMP #13)
SCALE 1" = 5' HORIZONTAL
1" = 2' VERTICAL

NAVFAC

COMMONWEALTH OF VIRGINIA
ALAN KARL ARNOLD
Lic. No. 029959
10-13-2016
PROFESSIONAL ENGINEER
SEAL

EWING COLE
Federal Reserve Bank Building
100 North 6th Street
Philadelphia, PA 19106
Tel: 215.923.2020 Fax: 215.574.0562

STANTEC
6110 FROST PLACE
LAUREL, MD 20707
A/E INFO

APPROVED

FOR COMMANDER NAVFAC
ACTIVITY

SATISFACTORY TO DATE

Designer JMS Author BKO Checker AKA

PM/DM
BRANCH MANAGER
CHIEF ENG/ ARCH
FIRE PROTECTION

DEPARTMENT OF THE NAVY
NAVAL FACILITIES ENGINEERING COMMAND
DoDEA
NAVAL FACILITIES ENGINEERING COMMAND ~ WASHINGTON
MARINE CORPS BASE QUANTICO, VIRGINIA
MARINE CORPS BASE QUANTICO
QUANTICO, VA

REPLACE QUANTICO M/H SCHOOL

STORMWATER MANAGEMENT DETAILS

SCALE: AS SHOWN
PROJECT NO.: P-021
CONSTR. CONTR. NO.
W91236-15-C-0023
NAVFAC DRAWING NO.
13090843
SHEET 89 OF 789
CU512

DRAWFORM REVISION: 10 MARCH 2009

RTA SUBMISSION - 10/13/2016

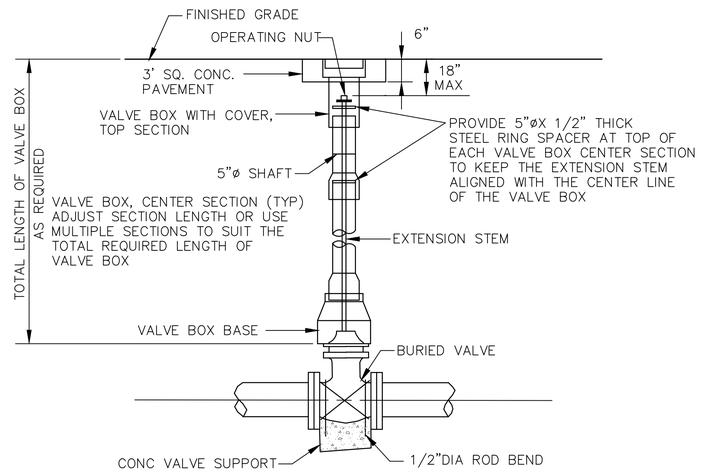

3 CU121 — VALVE BOX

NOT TO SCALE

CU122

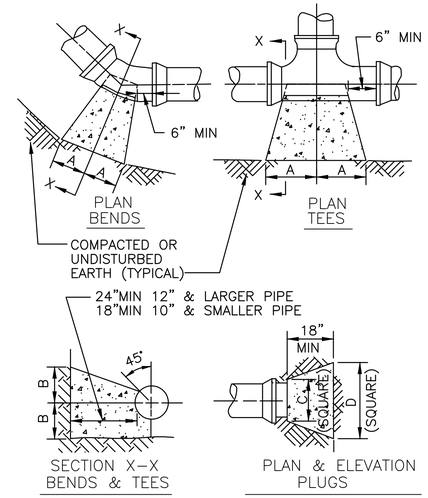

SIZE	1/4 BENDS		1/8 BENDS		1/16 BENDS		TEES		PLUGS	
	A	B	A	B	A	B	A	B	C	D
6"	16"	10"	9"	10"	6"	8"	10"	12"	10"	21"
8"	22"	13"	12"	13"	8"	10"	13"	16"	12"	29"
10"	26"	17"	14"	17"	10"	13"	16"	20"	14"	36"
12"	29"	21"	16"	21"	11"	16"	18"	24"	16"	41"
14"	35"	24"	19"	24"	12"	20"	22"	27"	18"	48"
16"	38"	27"	21"	27"	12"	24"	24"	30"	20"	54"

2 CU121 — THRUST BLOCKS

NOT TO SCALE

CU122

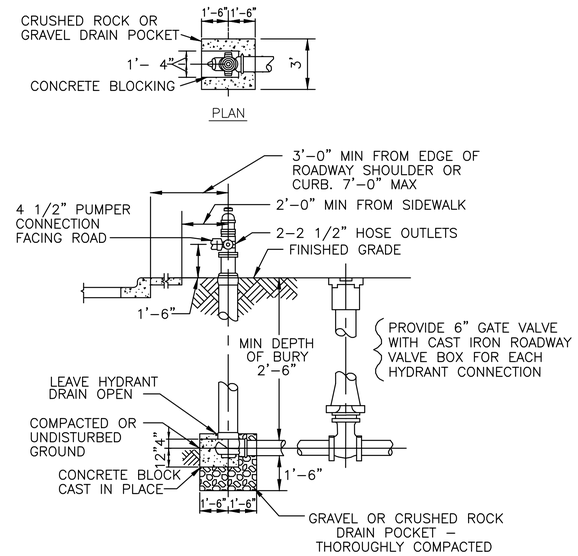

1 CU121 — FIRE HYDRANT

NOT TO SCALE

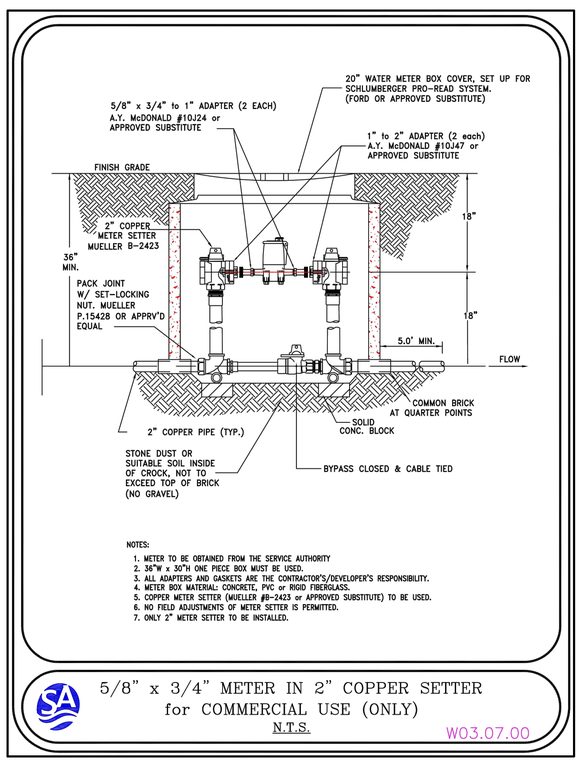

6 CU124 — SITE WATER METER

NOT TO SCALE

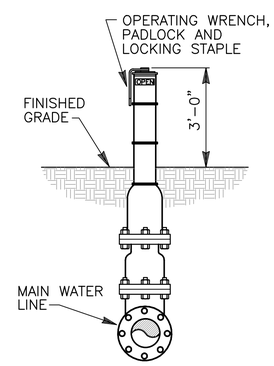

NOTE:
1. PROVIDE TAMPER SWITCH PER FIRE PROTECTION PLANS.

5 CU122 — INDICATOR POST VALVE

NOT TO SCALE

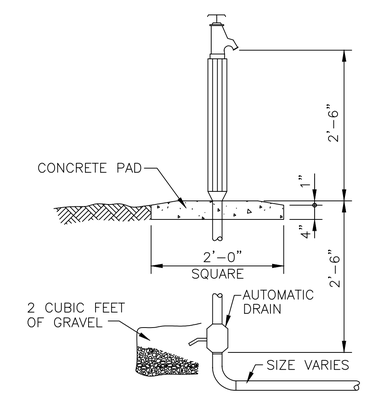

4 CU122 — YARD HYDRANT

NOT TO SCALE

RTA SUBMISSION - 10/13/2016

NAVFAC

COMMONWEALTH OF VIRGINIA — ALAN KARL ARNOLD Lic. No. 029959 — 10-13-2016 — PROFESSIONAL ENGINEER — SEAL

EWING COLE
Federal Reserve Bank Building
100 North 6th Street
Philadelphia, PA 19106
Tel: 215.923.2020 Fax: 215.574.0562

STANTEC
6110 FROST PLACE
LAUREL, MD 20707

A/E INFO

APPROVED

FOR COMMANDER NAVFAC ACTIVITY

SATISFACTORY TO DATE –/–/–

Designer JMS Author BKO Checker AKA

PM/DM

BRANCH MANAGER

CHIEF ENG/ ARCH

FIRE PROTECTION

DEPARTMENT OF THE NAVY
NAVAL FACILITIES ENGINEERING COMMAND
DoDEA
NAVAL FACILITIES ENGINEERING COMMAND – WASHINGTON
MARINE CORPS BASE QUANTICO, VIRGINIA
MARINE CORPS BASE QUANTICO
QUANTICO, VA
REPLACE QUANTICO M/H SCHOOL
WATER LINE DETAILS

SCALE: NTS
PROJECT NO.: P-021
CONSTR. CONTR. NO.: W91236-15-C-0023
NAVFAC DRAWING NO.: 13090844
SHEET 90 OF 789
CU521

DRAWFORM REVISION: 10 MARCH 2009

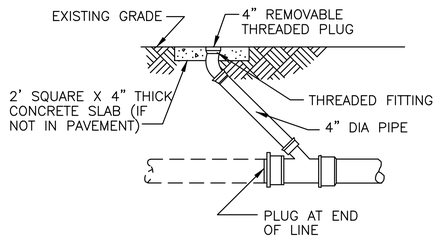

3 / CU525 CLEANOUT DETAIL

NOT TO SCALE

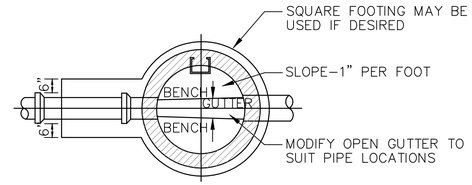

PLAN

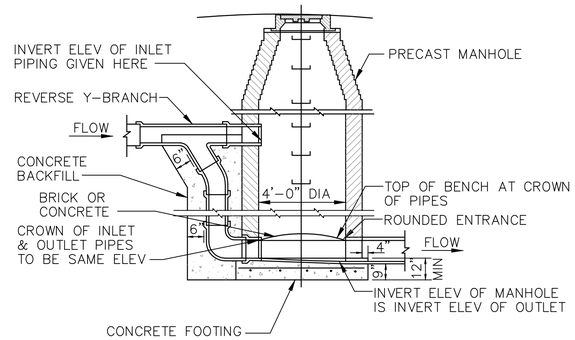

SECTION

2 / CU122 DROP MANHOLE CONNECTION

NOT TO SCALE

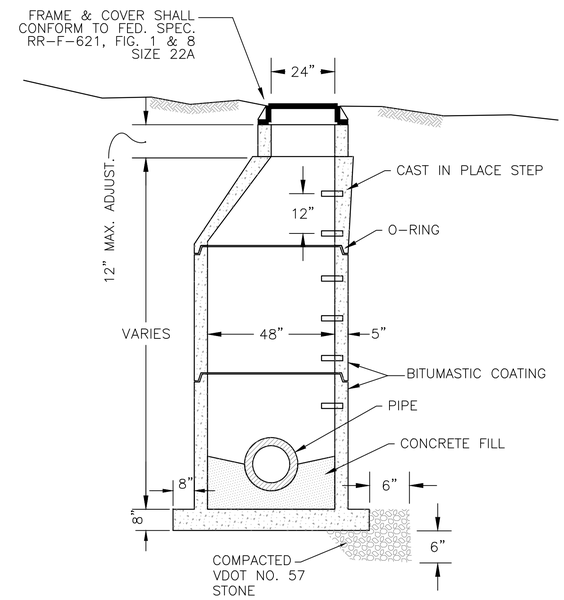

NOTES:

1. FOR INVERT AND RIM ELEVATIONS, SEE SANITARY SEWER PROFILES ON SHEETS CU321 – CU323.
2. MANHOLE TO MEET CURRENT REQUIREMENT OF ASTM C–476.
3. ALL REINFORCING STEEL TO MEET CURRENT REQUIREMENTS OF ASTM A–615.
4. CONCRETE TO BE 4000 PSI MINIMUM COMPRESSIVE STRENGTH.
5. TAPERED JOINT WITH O–RING GASKET TO MEET REQUIREMENT OF ASTM C–361 AND C–443.
6. MASTIC SHALL BE USED IN ADDITION TO THE JOINT SPECIFIED.
7. APPROVED FLEXIBLE JOINT REQUIRED ON ALL PIPE CONNECTIONS TO MANHOLES. INSTALLATION SHALL BE IN ACCORDANCE WITH MANUFACTURER'S INSTRUCTIONS.
8. MANUFACTURER'S NAME TO BE ON THE INSIDE FACE OF ALL SECTIONS.
9. MANHOLE SECTIONS SHALL HAVE LIFTING LUGS. NO THROUGH HOLES ALLOWED. KEYWAYS MAY BE SUBSTITUTED FOR LIFTING LUGS.
10. MASONRY UNITS MAY NOT BE USED FOR ADJUSTMENTS.

1 / CU121 PRECAST MANHOLE DETAIL

NOT TO SCALE

SYM	DESCRIPTION	DATE	APPR

NAVFAC

COMMONWEALTH OF VIRGINIA
ALAN KARL ARNOLD
Lic. No. 029959
10-13-2016
PROFESSIONAL ENGINEER
SEAL

EWING COLE
Federal Reserve Bank Building
100 North 6th Street
Philadelphia, PA 19106
Tel: 215.923.2020 Fax: 215.574.0562

STANTEC
6110 FROST PLACE
LAUREL, MD 20707
A/E INFO

APPROVED

FOR COMMANDER NAVFAC
ACTIVITY

SATISFACTORY TO DATE

Designer JMS Author BKO Checker AKA

PM/DM

BRANCH MANAGER

CHIEF ENG/ ARCH

FIRE PROTECTION

DEPARTMENT OF THE NAVY
NAVAL FACILITIES ENGINEERING COMMAND
DoDEA
NAVAL FACILITIES ENGINEERING COMMAND – WASHINGTON
MARINE CORPS BASE QUANTICO, VIRGINIA
MARINE CORPS BASE QUANTICO
QUANTICO, VA

REPLACE QUANTICO M/H SCHOOL

SANITARY SEWER DETAILS

SCALE: 1" = 30'

PROJECT NO.: P-021

CONSTR. CONTR. NO.
W91236-15-C-0023

NAVFAC DRAWING NO.
13090845

SHEET 91 OF 789

CU525

DRAWFORM REVISION: 10 MARCH 2009

RTA SUBMISSION - 10/13/2016