GENERAL NOTES

1. ALL CONDUIT SHALL BE EMT TYPE AND BONDED TOGETHER WITH ELECTRICAL ENCLOSURES TO FORM AN EFFECTIVE GROUND-FAULT CURRENT PATH.

2. IF WELDED STEEL CONSTRUCTION TYPE COMMUNICATION RACKS ARE NOT UTILIZED THE GROUND CONTINUITY MUST BE ENSURED BETWEEN EACH MATING SURFACE OF THE BOLT TOGETHER RACK.

SHEET NOTES

1. REFER TO EP AND E600 SERIES SHEETS FOR CONDUIT AND WIRE SIZE.
2. THE SYSTEM BONDING JUMPEN SHALL BE THE SAME SIZE AS THE GROUNDING ELECTRODE CONDUCTOR TO BUILDING STEEL. REFER TO SHEET E601 FOR EACH TRANSFORMER.
3. #3/0 GROUNDING ELECTRODE CONDUCTOR FROM 'MSB' THE 'MGB' (MAIN GROUNDING BUSBAR).
4. #4/0 MAIN BONDING JUMPER.
5. #3/0 TO BUILDING STEEL.
6. #6 GROUNDING CONDUCTOR.
7. #3/0 BONDING CONDUCTOR (TELECOMMUNICATIONS BONDING BACKBONE TO EACH TR ROOM (TR2 THROUGH TR6)).
8. #3/0 TO WATER PIPE (COLD WATER, HOT WATER, AND SPRINKLER).
9. #3/0 TO MAIN GROUND BUSBAR (MGB).
10. TO COMMUNICATION GROUNDING IN TR2, TR3, TR4, TR5, AND TR6

MAIN DISTRIBUTION PANEL

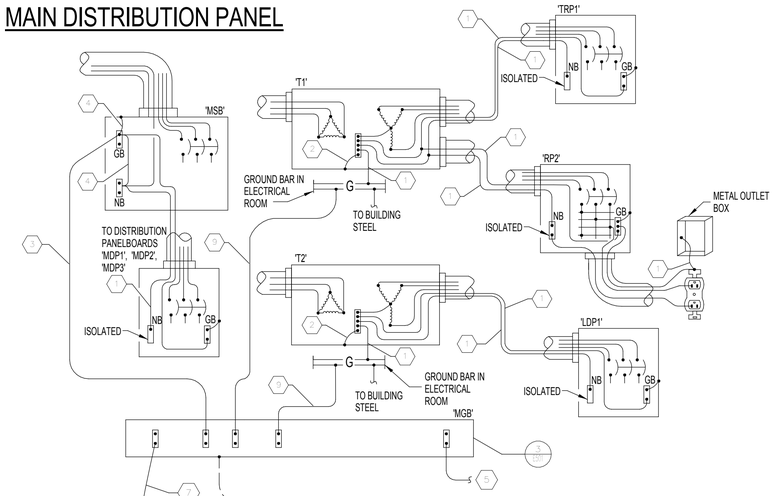

SEPERATE DERIVED SYSTEMS

COMMUNICATION GROUNDING TR1 ROOM 1C25

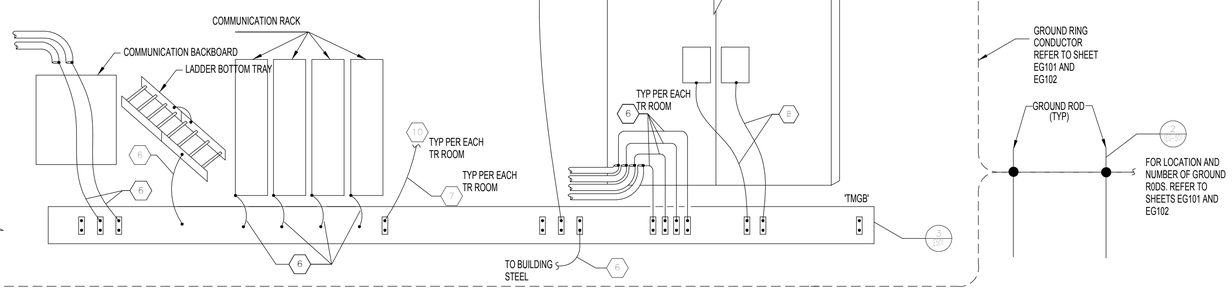

STRUCTURAL AND UTILITY GROUNDING

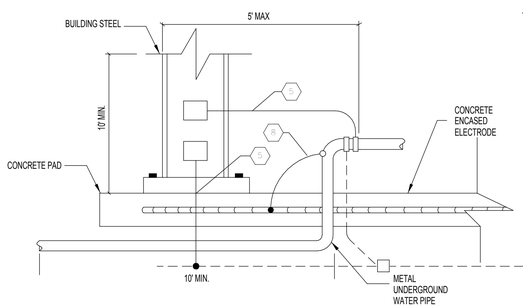

1 E607-GROUNDING ONE LINE

1/8" = 1'-0"

SYM	DESCRIPTION	DATE	APPR

NAVFAC

STATE OF KENTUCKY BRADLEY WYNN REEVES 20364 LICENSED PROFESSIONAL ENGINEER

SEAL

EWING COLE
Federal Reserve Bank Building
100 North 6th Street
Philadelphia, PA 19106-1590
Tel: 215-923-2020 Fax: 215-574-0952

A/E INFO

APPROVED

FOR COMMANDER NAVFAC ACTIVITY

SATISFACTORY TO DATE

BWR KDM BKB

PM/DM

BRANCH MANAGER

CHIEF ENG/ ARCH

FIRE PROTECTION

DEPARTMENT OF THE NAVY
NAVAL FACILITIES ENGINEERING COMMAND
DoDEA
NAVAL FACILITIES ENGINEERING COMMAND ~ WASHINGTON
MARINE CORPS BASE QUANTICO, VIRGINIA
MARINE CORPS BASE QUANTICO
QUANTICO, VA
REPLACE QUANTICO M/H SCHOOL
GROUNDING RISER DIAGRAM

SCALE: 1/8" = 1'-0"

PROJECT NO.: P-021

CONSTR. CONTR. NO. W91236-15-C-0023

NAVFAC DRAWING NO. 13091411

SHEET 657 OF 789

E607

DRAWFORM REVISION: 10 MARCH 2009

C:\Users\BradRDocuments\2014.QMS13 Central File_BradR.rvt

RTA SUBMISSION - 10/13/2016

LIGHT FIXTURE SCHEDULE

CH	DESCRIPTION	MANUFACTURER	LAMP	CMTA E WATTAGE INHOUSE	BALLAST/DRIVER	HEIGHT (BOTTOM OF FIXTURE)	VOLTAGE
A1	RECESSED 2X4 VOLUMETRIC FIXTURE WITH ACRYLIC LENS FOR INSTALLATION IN SUSPENDED GRID CEILING OR FLANGED INSTALLATION. 100-1% DIMMABLE DRIVER, PROVIDE 0-10V DIMMING CONDUCTORS.	LITHONIA 2VTL SERIES METALUX EQUAL, COLUMBIA EQUAL	3000 LUMEN 4000K LED	31 W	0-10V DIMMING	CLG	277 V
A1E	SAME AS TYPE A1 EXCEPT TO INCLUDE BATTERY PACK FOR MINIMUM 1400 LUMEN OUTPUT FOR 90 MINUTES	LITHONIA 2VTL SERIES METALUX EQUAL, COLUMBIA EQUAL	3000 LUMEN 4000K LED	31 W	0-10V DIMMING	CLG	277 V
A2	RECESSED 2X4 VOLUMETRIC FIXTURE WITH ACRYLIC LENS FOR INSTALLATION IN SUSPENDED GRID CEILING OR FLANGED INSTALLATION. 100-1% DIMMABLE DRIVER, PROVIDE 0-10V DIMMING CONDUCTORS.	LITHONIA 2VTL SERIES METALUX EQUAL, COLUMBIA EQUAL	4000 LUMEN 4000K LED	39 W	0-10V DIMMING	CLG	277 V
A2E	SAME AS TYPE A2 EXCEPT TO INCLUDE BATTERY PACK FOR MINIMUM 1400 LUMEN OUTPUT FOR 90 MINUTES	LITHONIA 2VTL SERIES METALUX EQUAL, COLUMBIA EQUAL	4000 LUMEN 4000K LED	39 W	0-10V DIMMING	CLG	277 V
A3	RECESSED 2X4 VOLUMETRIC FIXTURE WITH ACRYLIC LENS FOR INSTALLATION IN SUSPENDED GRID CEILING OR FLANGED INSTALLATION. 100-1% DIMMABLE DRIVER, PROVIDE 0-10V DIMMING CONDUCTORS.	LITHONIA 2VTL SERIES METALUX EQUAL, COLUMBIA EQUAL	6000 LUMEN 4000K LED	53 W	0-10V DIMMING	CLG	277 V
A3E	SAME AS TYPE A3 EXCEPT TO INCLUDE BATTERY PACK FOR MINIMUM 1400 LUMEN OUTPUT FOR 90 MINUTES	LITHONIA 2VTL SERIES METALUX EQUAL, COLUMBIA EQUAL	6000 LUMEN 4000K LED	53 W	0-10V DIMMING	CLG	277 V
A4	RECESSED 2X4 VOLUMETRIC FIXTURE WITH ACRYLIC LENS FOR INSTALLATION IN SUSPENDED GRID CEILING OR FLANGED INSTALLATION. 100-1% DIMMABLE DRIVER, PROVIDE 0-10V DIMMING CONDUCTORS.	LITHONIA 2VTL SERIES METALUX EQUAL, COLUMBIA EQUAL	7200 LUMEN 4000K LED	70 W	0-10V DIMMING	CLG	277 V
A4E	SAME AS TYPE A4 EXCEPT TO INCLUDE BATTERY PACK FOR MINIMUM 1400 LUMEN OUTPUT FOR 90 MINUTES	LITHONIA 2VTL SERIES METALUX EQUAL, COLUMBIA EQUAL	7200 LUMEN 4000K LED	70 W	0-10V DIMMING	CLG	277 V
B1	RECESSED 2X4 FIXTURE WITH #12 PATTERN 0.125" PRISMATIC LENS, FLUSH WHITE STEEL DOOR FOR INSTALLATION IN SUSPENDED GRID CEILING OR FLANGED INSTALLATION	LITHONIA 2GTL PHILIPS EQUAL, WILLIAMS EQUAL	3000 LUMEN 4000K LED	0 W	NO DIMMING REQUIRED	CLG	277 V
B2	RECESSED 2X4 FIXTURE WITH #12 PATTERN 0.125" PRISMATIC LENS, FLUSH WHITE STEEL DOOR FOR INSTALLATION IN SUSPENDED GRID CEILING OR FLANGED INSTALLATION (RATED FOR 120V IN FIELDHOUSE)	LITHONIA 2GTL PHILIPS EQUAL, WILLIAMS EQUAL	4000 LUMEN 4000K LED	39 W	NO DIMMING REQUIRED	CLG	277 V
B2E	SAME AS TYPE B2 EXCEPT TO INCLUDE BATTERY PACK FOR MINIMUM 1400 LUMEN OUTPUT FOR 90 MINUTES (RATED FOR 120V IN FIELDHOUSE)	LITHONIA 2GTL PHILIPS EQUAL, WILLIAMS EQUAL	4000 LUMEN 4000K LED	39 W	NO DIMMING REQUIRED	CLG	277 V
B3	RECESSED 2X4 FIXTURE WITH #12 PATTERN 0.125" PRISMATIC LENS, FLUSH WHITE STEEL DOOR FOR INSTALLATION IN SUSPENDED GRID CEILING OR FLANGED INSTALLATION (RATED FOR 120V IN FIELDHOUSE)	LITHONIA 2GTL PHILIPS EQUAL, WILLIAMS EQUAL	6000 LUMEN 4000K LED	59 W	NO DIMMING REQUIRED	CLG	277 V
B3E	SAME AS TYPE B3 EXCEPT TO INCLUDE BATTERY PACK FOR MINIMUM 1400 LUMEN OUTPUT FOR 90 MINUTES (RATED FOR 120V IN FIELDHOUSE)	LITHONIA 2GTL PHILIPS EQUAL, WILLIAMS EQUAL	6000 LUMEN 4000K LED	59 W	NO DIMMING REQUIRED	CLG	277 V
D1	6" OPEN DOWNLIGHT, CLEAR APERTURE/TRIM COLOR, 1.0 S/MH DISTRIBUTION, SEMI-SPECULAR FINISH	GOTHOM EVO SERIES PHILIPS EQUAL PORTFOLIO EQUAL	1400 LUMEN 4000K LED	25 W	NO DIMMING REQUIRED	CLG	277 V
D1E	SAME AS TYPE D1 EXCEPT TO INCLUDE BATTERY PACK FOR MINIMUM 580 LUMEN OUTPUT FOR 90 MINUTES	GOTHOM EVO SERIES PHILIPS EQUAL PORTFOLIO EQUAL	1400 LUMEN 4000K LED	25 W	NO DIMMING REQUIRED	CLG	277 V
D2	6" OPEN DOWNLIGHT, CLEAR APERTURE/TRIM COLOR, 1.0 S/MH DISTRIBUTION, SEMI-SPECULAR FINISH	GOTHOM EVO SERIES PHILIPS EQUAL PORTFOLIO EQUAL	1800 LUMEN 4000K LED	28 W	NO DIMMING REQUIRED		277 V
D2E	SAME AS TYPE D2 EXCEPT TO INCLUDE BATTERY PACK FOR MINIMUM 580 LUMEN OUTPUT FOR 90 MINUTES	GOTHOM EVO SERIES PHILIPS EQUAL PORTFOLIO EQUAL	1800 LUMEN 4000K LED	28 W	NO DIMMING REQUIRED		277 V
D3	4" DOWNLIGHT, 45 DEGREE BEAM ANGLE, CLEAR APERTURE/TRIM COLOR, SEMI-SPECULAR FINISH. PROVIDE 0-10V DIMMING CONDUCTORS.	GOTHOM ICO SERIES KURT VERSEN EQUAL KIRLAN EQUAL	1000 LUMEN 4000K LED	17 W	0-10V DIMMING	CLG	277 V
D4	6" DOWNLIGHT, 45 DEGREE BEAM ANGLE, CLEAR APERTURE/TRIM COLOR, SEMI-SPECULAR FINISH. PROVIDE CONDUCTORS FOR <1% DIMMING FUNCTIONALITY.	GOTHOM ICO SERIES KURT VERSEN EQUAL KIRLAN EQUAL	2000 LUMEN 4000K LED	35 W	DMX <1% DIMMING	CLG	277 V
D4E	SAME AS TYPE D4 EXCEPT TO INCLUDE BATTERY PACK FOR MINIMUM 580 LUMEN OUTPUT FOR 90 MINUTES	GOTHOM ICO SERIES KURT VERSEN EQUAL KIRLAN EQUAL	2000 LUMEN 4000K LED	35 W	DMX <1% DIMMING	CLG	277 V
D5	6" DOWNLIGHT, 45 DEGREE BEAM ANGLE, CLEAR APERTURE/TRIM COLOR, SEMI-SPECULAR FINISH. PROVIDE 0-10V DIMMING CONDUCTORS.	GOTHOM ICO SERIES KURT VERSEN EQUAL KIRLAN EQUAL	6000 LUMEN 4100K LED	101 W	0-10V DIMMING	CLG	277 V
D5E	SAME AS TYPE D5 EXCEPT TO INCLUDE BATTERY PACK FOR MINIMUM 580 LUMEN OUTPUT FOR 90 MINUTES	GOTHOM ICO SERIES KURT VERSEN EQUAL KIRLAN EQUAL	6000 LUMEN 4100K LED	101 W	0-10V DIMMING	CLG	277 V
D6	6" DOWNLIGHT, 45 DEGREE BEAM ANGLE, CLEAR APERTURE/TRIM COLOR, SEMI-SPECULAR FINISH. PROVIDE 0-10V DIMMING CONDUCTORS. PROVIDE SLOPE CEILING ADAPTERS FOR FIXTURES IN MUSIC ROOM 1C49	GOTHOM ICO SERIES KURT VERSEN EQUAL KIRLAN EQUAL	4000 LUMEN 4100K LED	64 W		CLG	277 V
D6E	SAME AS TYPE D6 EXCEPT TO INCLUDE BATTERY PACK FOR MINIMUM 1800 LUMEN OUTPUT FOR 90 MINUTES	GOTHOM ICO SERIES KURT VERSEN EQUAL KIRLAN EQUAL	4000 LUMEN 4100K LED	64 W		CLG	277 V
D7E	6" OPEN DOWNLIGHT, CLEAR APERTURE/TRIM COLOR, 1.0 S/MH DISTRIBUTION, SEMI-SPECULAR FINISH WET LOCATION (RATED FOR 120V IN FIELDHOUSE)	GOTHOM EVO SERIES PHILIPS EQUAL PORTFOLIO EQUAL	1800 LUMEN 4000K LED	28 W	NO DIMMING REQUIRED	CLG	277 V
G3	6" WIDE, 4' LONG LINEAR RECESSED LED WITH FLUSH FROSTED LENS, 3000 LUMEN, 42 WATTS. PROVIDE 0-10V DIMMING CONDUCTORS.	FOCAL POINT AVENUE 6 SERIES MARK EQUAL, NEO-RAY EQUAL	3000 LUMEN 4000K LED		0-10V DIMMING	CLG	277 V
G3E	SAME AS TYPE G3 EXCEPT TO INCLUDE INVERTER TO PROVIDE FULL LUMEN OUTPUT FOR 90 MINUTES	FOCAL POINT AVENUE 6 SERIES MARK EQUAL, NEO-RAY EQUAL	3000 LUMEN 4000K LED		0-10V DIMMING	CLG	277 V
I1	4' STRIP FIXTURE WITH DIFFUSE LENS (RATED FOR 120V IN FIELDHOUSE)	LITHONIA Z SERIES HUBBEL EQUAL, WILLIAMS EQUAL	3000 LUMEN 4000K LED	32 W	NO DIMMING REQUIRED	9' AFF	277 V
I1E	SAME AS TYPE I EXCEPT TO INCLUDE INVERTER TO PROVIDE FULL LUMEN OUTPUT FOR 90 MINUTES (RATED FOR 120V IN FIELDHOUSE)	LITHONIA Z SERIES HUBBEL EQUAL, WILLIAMS EQUAL	3000 LUMEN 4000K LED	32 W	NO DIMMING REQUIRED	9' AFF	277 V
I2	4' STRIP FIXTURE WITH DIFFUSE LENS. CODE GUAGE COLD ROLLED STEEL HOUSING.	LITHONIA Z SERIES HUBBEL EQUAL, WILLIAMS EQUAL	5000 LUMEN 4000K LED	42 W	NO DIMMING REQUIRED	9' AFF	277 V
I2E	SAME AS TYPE I EXCEPT TO INCLUDE BATTERY PACK FOR MINIMUM 1400 LUMEN OUTPUT FOR 90 MINUTES	LITHONIA Z SERIES HUBBEL EQUAL, WILLIAMS EQUAL	5000 LUMEN 4000K LED	42 W	NO DIMMING REQUIRED	9' AFF	277 V
I3	4' STRIP FIXTURE WITH DIFFUSE LENS. CODE GUAGE COLD ROLLED STEEL HOUSING.	LITHONIA Z SERIES HUBBEL EQUAL, WILLIAMS EQUAL	3000 LUMEN 4000K LED	32 W	NO DIMMING REQUIRED	9' AFF	120 V
I3E	SAME AS TYPE I EXCEPT TO INCLUDE INVERTER TO PROVIDE FULL LUMEN OUTPUT FOR 90 MINUTES	LITHONIA Z SERIES HUBBEL EQUAL, WILLIAMS EQUAL	3000 LUMEN 4000K LED	32 W	NO DIMMING REQUIRED	9' AFF	120 V
J	6" DOWNLIGHT, STANDARD DISTRIBUTION, DEAD-FRONT REGRESSED LENS	GOTHOM EVO SERIES PHILIPS EQUAL PORTFOLIO EQUAL	1000 LUMEN 4100K LED	22 W	NO DIMMING REQUIRED	CLG	277 V
JE	6" DOWNLIGHT, STANDARD DISTRIBUTION, DEAD-FRONT REGRESSED LENS	GOTHOM EVO SERIES PHILIPS EQUAL PORTFOLIO EQUAL	1000 LUMEN 4100K LED	22 W	NO DIMMING REQUIRED	CLG	277 V
K	2X4 WET LOCATION RECESSED TROFFER, GRID CEILING, ALUMINUM HOUSING, STAINLESS STEEL DOOR	KURTZON WL SERIES LITHONIA EQUAL KENALL EQUAL	3000 LUMEN 4000K LED	77 W	NO DIMMING REQUIRED	CLG	277 V
KE	SAME AS TYPE H EXCEPT TO INCLUDE BATTERY PACK FOR MINIMUM 1400 LUMEN OUTPUT FOR 90 MINUTES	KURTZON WL SERIES LITHONIA EQUAL KENALL EQUAL	3000 LUMEN 4000K LED	77 W	NO DIMMING REQUIRED	CLG	277 V
L	4' WALL MOUNTED LINEAR ADA FIXTURE, SURFACE MOUNT ON WALL, PROVIDE WITH REMOTE BATTERY PACK FOR 90 MINUTE OPERATION	STILE MUWR SERIES BIRCHWOOD EQUAL ALW EQUAL	11000 LUMEN 4500K LED	107 W	NO DIMMING REQUIRED	9' AFF	277 V
LE	4' WALL MOUNTED LINEAR ADA FIXTURE, SURFACE MOUNT ON WALL, PROVIDE WITH REMOTE BATTERY PACK FOR 90 MINUTE OPERATION	STILE MUWR SERIES BIRCHWOOD EQUAL ALW EQUAL	11000 LUMEN 4500K LED	107 W	NO DIMMING REQUIRED	9' AFF	277 V
M	HIGH-BAY LED FIXTURE WITH UPLIGHT AND CLEAR LENS, DUAL LEVEL SWITCHING, PENDANT MOUNTED, WIDE DISTRIBUTION. PROVIDE CONDUCTORS FOR DUAL LEVEL DIMMING FUNCTIONALITY.	HOLOPHANE PHUZION SERIES LITHONIA EQUAL AZZ EQUAL	24000 LUMEN 4000K LED	230 W	DUAL LEVEL DIMMING	25' AFF	277 V
ME	SAME AS TYPE M EXCEPT TO INCLUDE REMOTE BATTERY PACK TO PROVIDE 2000 LUMEN OUTPUT FOR 90 MINUTES	HOLOPHANE PHUZION SERIES LITHONIA EQUAL AZZ EQUAL	24000 LUMEN 4000K LED	230 W	DUAL LEVEL DIMMING	25' AFF	277 V
N1	8' LONG PENDANT FIXTURE, MEDIUM DISTRIBUTION VERTICAL LINEAR FIXTURE WITH 3000 LUMEN DOWNLIGHT. REFER TO LIGHTING SHEETS FOR MOUNTING HEIGHT PER FIXTURE. MOUNTING HEIGHT IS FROM FINISHED FLOOR TO BOTTOM OF FIXTURE. PROVIDE 0-10V DIMMING CONDUCTORS.	VISA CP2040 SERIES SPI EQUAL, WINONA EQUAL	34500 LUMEN 4000K LED	455 W	0-10V DIMMING		277 V
N1E	8' LONG PENDANT FIXTURE, MEDIUM DISTRIBUTION VERTICAL LINEAR FIXTURE WITH 3000 LUMEN DOWNLIGHT. PROVIDE 0-10V DIMMING CONDUCTORS. DOWNLIGHT SHALL BE UTILIZED FOR EMERGENCY LIGHTING (VIA REMOTE BATTERY INVERTER). REFER TO LIGHTING SHEETS FOR MOUNTING HEIGHT PER FIXTURE. MOUNTING HEIGHT IS FROM FINISHED FLOOR TO BOTTOM OF FIXTURE.	VISA CP2040 SERIES SPI EQUAL, WINONA EQUAL	34500 LUMEN 4000K LED	455 W	0-10V DIMMING		277 V
N2	4' LONG PENDANT FIXTURE, MEDIUM DISTRIBUTION VERTICAL LINEAR FIXTURE WITH 3000 LUMEN DOWNLIGHT. PROVIDE 0-10V DIMMING CONDUCTORS.	VISA CP2040 SERIES SPI EQUAL, WINONA EQUAL	16300 LUMEN 4000K LED	216 W	0-10V DIMMING		277 V

LIGHT FIXTURE SCHEDULE

CH	DESCRIPTION	MANUFACTURER	LAMP	CMTA E WATTAGE INHOUSE	BALLAST/DRIVER	HEIGHT (BOTTOM OF FIXTURE)	VOLTAGE
N2E	4' LONG PENDANT FIXTURE, MEDIUM DISTRIBUTION VERTICAL LINEAR FIXTURE WITH 3000 LUMEN DOWNLIGHT. PROVIDE 0-10V DIMMING CONDUCTORS. DOWNLIGHT SHALL BE UTILIZED FOR EMERGENCY LIGHTING (VIA REMOTE BATTERY INVERTER)	VISA CP2040 SERIES SPI EQUAL, WINONA EQUAL	16300 LUMEN 4000K LED	216 W	0-10V DIMMING		277 V
O	DIE-CAST SURFACE MOUNT ALUMINUM IN-USE LIGHT, SINGLE STENCIL FACE, RED LETTERS	LITHONIA LE SERIES EMERGILITE EQUAL ISOLITE EQUAL	LED	0 W	NO DIMMING REQUIRED	8' AFF	277 V
P	THERMOPLASTIC ELEVATOR PIT LIGHT, WALL MOUNT, PRISMATIC CLEAR GLASS	CANLET VP SERIES LITHONIA EQUAL, GE EQUAL	1800 LUMEN 4000K LED	20 W	NO DIMMING REQUIRED	8' AFF	120 V
Q	12" SQAURE 16' TALL PENDANT, WITH DOWNLIGHT	VISA CP5555 SERIES ADVENT EQUAL, WINONA EQUAL	18600 LUMEN 4000K LED	324 W	NO DIMMING REQUIRED		277 V
RE	8' LONG CORNER MOUNTED LINEAR LED WITH BATTERY PACK FOR MINIMUM 1400 LUMEN OUTPUT FOR 90 MINUTES	ARCHITECTURAL LIGHTING WORKS NOVENTA SERIES BARBICAN EQUAL BIRCHWOOD EQUAL	8400 LUMEN 4000K LED	96 W	NO DIMMING REQUIRED	7' AFF	277 V
S1	WALL MOUNTED EXTERIOR LED (RATED FOR 120V IN FIELDHOUSE)	BEGA 2260 SERIES LOUIS POULSEN EQUAL WE-EF EQUAL	2700 LUMEN 4000K LED	45 W	NO DIMMING REQUIRED	REFER TO PLANS	277 V
S1E	SAME AS TYPE S1 EXCEPT TO INCLUDE REMOTE BATTERY PACK TO PROVIDE FULL LUMEN OUTPUT FOR 90 MINUTES (RATED FOR 120V IN FIELDHOUSE)	BEGA 2260 SERIES LOUIS POULSEN EQUAL WE-EF EQUAL	2700 LUMEN 4000K LED	45 W	NO DIMMING REQUIRED	REFER TO PLANS	277 V
S2A	POLE MOUNTED AREA LIGHT, 80 LED, 1000mA DRIVE CURRENT, TYPE 2 DISTRIBUTION, WITH 30'-0" STRAIGHT SQAURE 7 GAUGE STEEL POLE	LITHONIA DSX2 SERIES KIM EQUAL GUARDCO EQUAL	25000 LUMEN 4000K LED	282 W	NO DIMMING REQUIRED		277 V
S2B	POLE MOUNTED AREA LIGHT, 80 LED, 1000mA DRIVE CURRENT, TYPE 3 DISTRIBUTION, WITH 30'-0" STRAIGHT SQAURE 7 GAUGE STEEL POLE	LITHONIA DSX2 SERIES KIM EQUAL GUARDCO EQUAL	25000 LUMEN 4000K LED	282 W	NO DIMMING REQUIRED		277 V
S2C	POLE MOUNTED AREA LIGHT, 80 LED, 1000mA DRIVE CURRENT, TYPE 2 SHORT DISTRIBUTION, HOUSE SIDE SHIELD, WITH 30'-0" STRAIGHT SQAURE 7 GAUGE STEEL POLE	LITHONIA DSX2 SERIES KIM EQUAL GUARDCO EQUAL	25000 LUMEN 4000K LED	282 W	NO DIMMING REQUIRED		277 V
S3	42" BOLLARD, ASYMMETRIC DISTRIBUTION, 700mA DRIVE CURRENT	LITHONIA DSX8 SERIES KIM EQUAL GUARDCO EQUAL	1500 LUMEN 4000K LED	31 W	NO DIMMING REQUIRED		277 V
SB1	SPORTS LIGHT FIXTURE, DIE CAST ALUMINUM HOUSING, REFER TO SHEET ES105 FOR QUANTITY OF FIXTURE PER POLE	MUSCO 1500MHZ SERIES CHM EQUAL LITHONIA EQUAL	134000 LUMEN METAL HALIDE PER FIXTURE	0 W	NO DIMMING REQUIRED		277 V
SB2	SPORTS LIGHT FIXTURE, DIE CAST ALUMINUM HOUSING, REFER TO SHEET ES105 FOR QUANTITY OF FIXTURE PER POLE	MUSCO 1500MHZ SERIES CHM EQUAL LITHONIA EQUAL	134000 LUMEN METAL HALIDE PER FIXTURE	0 W	NO DIMMING REQUIRED		277 V
SB3	SPORTS LIGHT FIXTURE, DIE CAST ALUMINUM HOUSING, REFER TO SHEET ES105 FOR QUANTITY OF FIXTURE PER POLE	MUSCO 1500MHZ SERIES CHM EQUAL LITHONIA EQUAL	134000 LUMEN METAL HALIDE PER FIXTURE	0 W	NO DIMMING REQUIRED		277 V
SB4	SPORTS LIGHT FIXTURE, DIE CAST ALUMINUM HOUSING, REFER TO SHEET ES105 FOR QUANTITY OF FIXTURE PER POLE	MUSCO 1500MHZ SERIES CHM EQUAL LITHONIA EQUAL	134000 LUMEN METAL HALIDE PER FIXTURE	0 W	NO DIMMING REQUIRED		277 V
SB5	SPORTS LIGHT FIXTURE, DIE CAST ALUMINUM HOUSING, REFER TO SHEET ES105 FOR QUANTITY OF FIXTURE PER POLE	MUSCO 1500MHZ SERIES CHM EQUAL LITHONIA EQUAL	134000 LUMEN METAL HALIDE PER FIXTURE	0 W	NO DIMMING REQUIRED		277 V
SB6	SPORTS LIGHT FIXTURE, DIE CAST ALUMINUM HOUSING, REFER TO SHEET ES105 FOR QUANTITY OF FIXTURE PER POLE	MUSCO 1500MHZ SERIES CHM EQUAL LITHONIA EQUAL	134000 LUMEN METAL HALIDE PER FIXTURE	0 W	NO DIMMING REQUIRED		277 V
SB7	SPORTS LIGHT FIXTURE, DIE CAST ALUMINUM HOUSING, REFER TO SHEET ES105 FOR QUANTITY OF FIXTURE PER POLE	MUSCO 1500MHZ SERIES CHM EQUAL LITHONIA EQUAL	134000 LUMEN METAL HALIDE PER FIXTURE	0 W	NO DIMMING REQUIRED		277 V
SB8	SPORTS LIGHT FIXTURE, DIE CAST ALUMINUM HOUSING, REFER TO SHEET ES105 FOR QUANTITY OF FIXTURE PER POLE	MUSCO 1500MHZ SERIES CHM EQUAL LITHONIA EQUAL	134000 LUMEN METAL HALIDE PER FIXTURE	0 W	NO DIMMING REQUIRED		277 V
SF1	SPORTS LIGHT FIXTURE, DIE CAST ALUMINUM HOUSING, REFER TO SHEET ES105 FOR QUANTITY OF FIXTURE PER POLE	MUSCO 1500MHZ SERIES CHM EQUAL LITHONIA EQUAL	134000 LUMEN METAL HALIDE PER FIXTURE	0 W	NO DIMMING REQUIRED		277 V
SF2	SPORTS LIGHT FIXTURE, DIE CAST ALUMINUM HOUSING, REFER TO SHEET ES105 FOR QUANTITY OF FIXTURE PER POLE	MUSCO 1500MHZ SERIES CHM EQUAL LITHONIA EQUAL	134000 LUMEN METAL HALIDE PER FIXTURE	0 W	NO DIMMING REQUIRED		277 V
SF3	SPORTS LIGHT FIXTURE, DIE CAST ALUMINUM HOUSING, REFER TO SHEET ES105 FOR QUANTITY OF FIXTURE PER POLE	MUSCO 1500MHZ SERIES CHM EQUAL LITHONIA EQUAL	134000 LUMEN METAL HALIDE PER FIXTURE	0 W	NO DIMMING REQUIRED		277 V
SF4	SPORTS LIGHT FIXTURE, DIE CAST ALUMINUM HOUSING, REFER TO SHEET ES105 FOR QUANTITY OF FIXTURE PER POLE	MUSCO 1500MHZ SERIES CHM EQUAL LITHONIA EQUAL	134000 LUMEN METAL HALIDE PER FIXTURE	0 W	NO DIMMING REQUIRED		277 V
SS1	SPORTS LIGHT FIXTURE, DIE CAST ALUMINUM HOUSING, REFER TO SHEET ES105 FOR QUANTITY OF FIXTURE PER POLE	MUSCO 1500MHZ SERIES CHM EQUAL LITHONIA EQUAL	134000 LUMEN METAL HALIDE PER FIXTURE	0 W	NO DIMMING REQUIRED		277 V
SS2	SPORTS LIGHT FIXTURE, DIE CAST ALUMINUM HOUSING, REFER TO SHEET ES105 FOR QUANTITY OF FIXTURE PER POLE	MUSCO 1500MHZ SERIES CHM EQUAL LITHONIA EQUAL	134000 LUMEN METAL HALIDE PER FIXTURE	0 W	NO DIMMING REQUIRED		277 V
SS3	SPORTS LIGHT FIXTURE, DIE CAST ALUMINUM HOUSING, REFER TO SHEET ES105 FOR QUANTITY OF FIXTURE PER POLE	MUSCO 1500MHZ SERIES CHM EQUAL LITHONIA EQUAL	134000 LUMEN METAL HALIDE PER FIXTURE	0 W	NO DIMMING REQUIRED		277 V
SS4	SPORTS LIGHT FIXTURE, DIE CAST ALUMINUM HOUSING, REFER TO SHEET ES105 FOR QUANTITY OF FIXTURE PER POLE	MUSCO 1500MHZ SERIES CHM EQUAL LITHONIA EQUAL	134000 LUMEN METAL HALIDE PER FIXTURE	0 W	NO DIMMING REQUIRED		277 V
T1	6" PENDANT, 45 DEGREE BEAM ANGLE, CLEAR APERTURE/TRIM COLOR, SEMI-SPECULAR FINISH, WITH DMX CONTROLS. PROVIDE CONDUCTORS FOR <1% DIMMING FUNCTIONALITY.	GOTHAM ICO SERIES KURT VERSEN EQUAL KIRLIN EQUAL	5000 LUMEN 4000K LED	73 W	DMX <1% DIMMING	REFER TO PLANS	120 V
T1E	SAME AS TYPE T1 EXCEPT TO BE POWERED BY REMOTE BATTERY PACK FOR FULL LUMEN OUTPUT FOR 90 MINUTES, INCLUDE DMX CONTROL OVERRIDE TO FULL BRIGHTNESS	GOTHAM ICO SERIES KURT VERSEN EQUAL KIRLIN EQUAL	5000 LUMEN 4000K LED	73 W	DMX <1% DIMMING	REFER TO PLANS	120 V
T2	FOH ELECTRIC, 250 WATT LED PROFILE SPOT LIGHTS, RGBW ARRAY, 19 DEGREE LENS, TOTAL OF SEVEN (7) FIXTURES (T2 AND T3 ON SAME PIPE BATTON) WITH DMX CONTROLS. PROVIDE CONDUCTORS FOR <1% DIMMING FUNCTIONALITY.	ALTMAN PHOENIX PROFILE SPOT STRAND EQUAL ETC EQUAL	250W LED	250 W	DMX <1% DIMMING	REFER TO PLANS	120 V
T3	FOH ELECTRIC, 250 WATT LED PROFILE SPOT LIGHTS, RGBW ARRAY, 26 DEGREE LENS, TOTAL OF SEVEN (7) FIXTURES (T2 AND T3 ON SAME PIPE BATTON) WITH DMX CONTROLS. PROVIDE CONDUCTORS FOR <1% DIMMING FUNCTIONALITY.	ALTMAN PHOENIX PROFILE SPOT STRAND EQUAL ETC EQUAL	250W LED	250 W	DMX <1% DIMMING	REFER TO PLANS	120 V
T4	FIRST ELECTRIC, 250 WATT LED PROFILE SPOT LIGHTS, RGBW ARRAY, 50 DEGREE LENS, TOTAL OF EIGHT (8) FIXTURES (T4 AND t5 ON SAME PIPE BATTON) WITH DMX CONTROLS. PROVIDE CONDUCTORS FOR <1% DIMMING FUNCTIONALITY.	ALTMAN PHOENIX PROFILE SPOT STRAND EQUAL ETC EQUAL	250W LED	250 W	DMX <1% DIMMING	20' AFF	120 V
T5	FIRST ELECTRIC, 250 WATT LED PAR2 RGBW ZOOM SPOT LIGHT, 10 TO 60 DEGREE ZOOM, TOTAL OF EIGHT (8) FIXTURES (T4 AND t5 ON SAME PIPE BATTON), WITH DMX CONTROLS. PROVIDE CONDUCTORS FOR <1% DIMMING FUNCTIONALITY.	MARTIN RUSH PAR2 SERIES STRAND EQUAL ETC EQUAL	10X12, 150W LED	250 W	DMX <1% DIMMING	20' AFF	120 V
T6	SECOND ELECTRIC, 250 WATT LED PAR2 RGBW ZOOM SPOT LIGHT, 10 TO 60 DEGREE ZOOM, TOTAL OF EIGHT (8) FIXTURES, WITH DMX CONTROLS. PROVIDE CONDUCTORS FOR <1% DIMMING FUNCTIONALITY.	MARTIN RUSH PAR2 SERIES STRAND EQUAL ETC EQUAL	10X12, 150W LED	250 W	DMX <1% DIMMING	20' AFF	120 V
T8	4' STRIP FIXTURE WITH DIFFUSE LENS, BLACK FINISH. PROVIDE 0-10V DIMMING CONDUCTORS.	LITHONIA Z SERIES WILLIAMS EQUAL COLUMBIA EQUAL	7000 LUMEN 4000K LED	70 W	0-10V DIMMING	20' AFF	120 V
T8E	SAME AS TYPE T8 EXCEPT TO INCLUDE BATTERY PACK FOR MINIMUM 1400 LUMEN OUTPUT FOR 90 MINUTES	LITHONIA Z SERIES WILLIAMS EQUAL COLUMBIA EQUAL	7000 LUMEN 4000K LED	70 W	0-10V DIMMING	20' AFF	120 V
T9	STAGE EDGE ROPE LIGHT, WITH DMX CONTROLS. PROVIDE CONDUCTORS FOR <1% DIMMING FUNCTIONALITY.	MODALIGHT SUPER NEON X DOME SERIES TARGETTI EQUAL ELEMENTAL EQUAL	95 LUMEN PER FOOT	100 W	DMX <1% DIMMING	REFER TO PLANS	120 V
T10	4' LINEAR WALL MOUNTED WALL WASH. PROVIDE 0-10V DIMMING CONDUCTORS.	ECOSENSE TROV SERIES TRAXXON EQUAL APPROVED EQUAL	3000 LUMEN 4000K LED	10 W	0-10V DIMMING	REFER TO PLANS	277 V
X1	DIE CAST ALUMINUM EXIT LIGHT - SINGLE FACE	LITHONIA LE SERIES DUALITE EQUAL ISOLITE EQUAL	LED	0 W	NO DIMMING REQUIRED		277 V
X2	DIE CAST ALUMINUM EXIT LIGHT - DUAL FACE	LITHONIA LE SERIES DUALITE EQUAL ISOLITE EQUAL	LED	0 W	NO DIMMING REQUIRED	CLG (8' AFF -WALL)	277 V

SYM	DESCRIPTION	DATE	APPR

NAVFAC

STATE OF KENTUCKY BRADLEY-WYNN REYES 20364 LICENSED PROFESSIONAL ENGINEER

SEAL

EWING COLE
Federal Reserve Bank Building
100 North 6th Street
Philadelphia, PA 19106-1590
Tel: 215-923-2020 Fax: 215-574-0952
A/E INFO

APPROVED

FOR COMMANDER NAVFAC ACTIVITY

SATISFACTORY TO DATE

BWR KDM BKB

PM/DM

BRANCH MANAGER

CHIEF ENG/ ARCH

FIRE PROTECTION

DEPARTMENT OF THE NAVY
NAVAL FACILITIES ENGINEERING COMMAND ~ WASHINGTON
DoDEA
NAVAL FACILITIES ENGINEERING COMMAND
MARINE CORPS BASE QUANTICO, VIRGINIA
MARINE CORPS BASE QUANTICO
QUANTICO, VA
REPLACE QUANTICO M/H SCHOOL
LUMINAIRE SCHEDULE

SCALE:

PROJECT NO.: P-021

CONSTR. CONTR. NO. W91236-15-C-0023

NAVFAC DRAWING NO. 13091412

SHEET 658 OF 789

E701

DRAWFORM REVISION: 10 MARCH 2009

RTA SUBMISSION - 10/13/2016

C:\Users\BradR\Documents\2014-QMS\13 Central File_BradR.rvt

1 2 3 4 5

D C B A

PANELBOARD AND WIRING SCHEDULE

PANELBOARD: **RP1** VOLTAGE: 208Y/120 AMPERES: 150 MLO 3PH/4W AIC: 10,000

GND	CON	LOAD A	LOAD B	LOAD C	DESIGNATION	WIRE	BKR	CKT	CKT	BKR	WIRE	DESIGNATION	LOAD A	LOAD B	LOAD C	CON	GND
12	3/4"	1.0			RCPT - MECH 1C27	12	20	1	2	20	12	RCPT MECH 1C27	1.0			3/4"	12
12	3/4"		1.4		RCPT - TEAM STORAE 1C10	12	20	3	4	30/2	10	DRYER- ATHLETIC LAUNDRY 1C12		1.4		3/4"	10
12	3/4"			1.0	WASHER - ATHLETIC LAUNDRY 1C12	12	20	5	6						1.4	1.4	-
12	3/4"	1.0			RCPT MENS LOCKER ROOM 1C28	12	20	7	8	20	12	RCPT MENS/WOMENS LOCKER ROO	0.8			3/4"	12
12	3/4"		1.4		RCPT WOMENS LOCKER ROOM 1C20	12	20	9	10	20	12	RCPT WEIGHT ROOM 1C18		0.6		3/4"	12
12	3/4"			0.6	RCPT WEIGHT ROOM 1C18	12	20	11	12	20	12	RCPTS CORRIDOR			0.6	3/4"	12
12	3/4"	0.6			RCPT ROOFTOP	12	20	13	14	20	12	RCPT MAINTENANCE OFFICE 1C16	0.4			3/4"	12
12	3/4"		1.4		RCPT MAINTENANCE OFFICE 1C16	12	20	15	16	20	12	RCPT MENS TOILET 1C15		0.4		3/4"	12
12	3/4"			1.0	RCPT WOMENS TOILET 1C14	12	20	17	18	*20	12	WATER FOUNTAIN			1.0	3/4"	12
12	3/4"	1.0			WATER FOUNTAIN	12	*20	19	20	20	12	RCPT RECEIVING & INSPECTION RM	1.2			3/4"	12
12	3/4"		0.8		RCPT CENTRAL STORAGE 1C19	12	20	21	22	20	12	RCPT ELECTRICAL ROOM 1C21		0.8		3/4"	12
12	3/4"			0.8	RCPT CIRCULATION 1C02	12	20	23	24	20	12	RCPT EQUIPMENT STORAGE 1C35			0.6	3/4"	12
12	3/4"	1.0			AIR MONITORING SYSTEM	12	20	25	26	20	12	RCPT CIRCULATION 2F264, EXT	1.2			3/4"	12
12	3/4"		1.4		RCPT PE STORAGE 1C08	12	20	27	28	20	12	RCPT PE STORAGE 1C08		1.0		3/4"	12
12	3/4"			1.0	AIR MONITORING SYSTEM	12	20	29	30	20	12	RCPT TRAINING ROOM 1C09			0.4	3/4"	12
12	3/4"	1.0			RCPT TRAINING ROOM 1C09	12	20	31	32	20	8	SECURITY GATE	1.0			1"	8
10	3/4"		1.0		BASKETBALL GOALS	10	20	33	34	20	10	RCPT BOLLARD		1.0		1"	10
10	3/4"			1.0	BASKETBALL GOALS	10	20	35	36	20	12	OA-2 ENERGY RECOVERY			1.9	3/4"	12
10	3/4"	1.0			BASKETBALL GOALS	10	20	37	38	20	12	DOOR PWR SUPPLY RM 1C19	0.5			3/4"	12
10	3/4"		1.0		BASKETBALL GOALS	10	20	39	40	20	12	DOOR PWR SUPPLY RM 1C17		1.0		3/4"	12
10	3/4"			1.0	BASKETBALL GOALS	10	20	41	42	20	12	MAINTENANCE RCPTS ROOF			1.0	3/4"	12
10	3/4"	1			BASKETBALL GOALS	10	20	43	44	20	12	RCPTS CENTRAL STORAGE 1C19	0.4			3/4"	12
10	3/4"		1		GYM CURTAIN	10	20	45	46	20	12	RCPTS RM 1C27		1.0		3/4"	12
				1.0	FUTURE ELEC HANDDRYER		20	47	48	20	12	RCPTS RM 1C27			0.4	3/4"	12
		1.0			FUTURE ELEC HANDDRYER		20	49	50	20	12	RCPT TRAINING ROOM 1C09	0.4			3/4"	12
12	3/4"		1.0		AV RACK RM1C08	12	20	51	52	20		SPARE		1.0			
				1.0	SPARE		20	53	54	20		SPARE			1.0		
		8.6	10.4	8.4	SUB-TOTAL	KVA						KVA SUB-TOTAL	6.9	8.2	8.3		
												KVA GROSS-TOTAL	15.5	18.6	16.7		50.8

*GFI BREAKER

PANELBOARD AND WIRING SCHEDULE

PANELBOARD: **RP2** VOLTAGE: 208Y/120 AMPERES: 150 MCB 3PH/4W AIC: 10,000

GND	CON	LOAD A	LOAD B	LOAD C	DESIGNATION	WIRE	BKR	CKT	CKT	BKR	WIRE	DESIGNATION	LOAD A	LOAD B	LOAD C	CON	GND
								1	2	20	12	RCPT JROTC2 (1C32)	0.4			3/4"	12
12	3/4"		0.4		RCPT JROTC2 (1C32)	12	20	3	4								
12	3/4"			0.2	COW RCPT JROTC2 (1C32)	12	20	5	6	20	12	RCPT JROTC2 (1C32)			1.0	3/4"	12
12	3/4"	0.4			RCPT JROTC2 (1C32)	12	20	7	8	20	12	RCPT JROTC2 (1C32)	0.6			3/4"	12
12	3/4"		0.8		RCPT JROTC2 (1C32)	12	20	9	10	20	12	RCPT JROTC1 (1C30)		1.0		3/4"	12
					SPACE ONLY			11	12	20	12	RCPT JROTC1 (1C30)			0.4	3/4"	12
					SPACE ONLY			13	14	20	12	RCPT JROTC1 (1C30)	0.4			3/4"	12
12	3/4"		0.2		COW RCPT JROTC1 (1C30)	12	20	15	16	20	12	RCPT JROTC1 (1C30)		0.8		3/4"	12
12	3/4"			0.4	RCPT JROTC1 (1C30)	12	20	17	18	20	12	RCPT JROTC1 (1C30)			1.0	3/4"	12
12	3/4"	0.2			WATER FOUNTAIN	12	*20	19	20	*20	12	WATER FOUNTAIN	0.2			3/4"	12
12	3/4"		1.0		RCPT STAFF WORKSPACE 1C31	12	20	21	22			SPACE ONLY					
12	3/4"			0.6	RCPT STAFF WORKSPACE 1C31	12	20	23	24	20	12	RCPT STAFF WORKSPACE 1C31			0.4	3/4"	12
12	3/4"	0.4			RCPT STAFF WORKSPACE 1C31	12	20	25	26	20	12	RCPT STAFF WORKSPACE 1C31	0.4			3/4"	12
12	3/4"		0.4		RCPT JROTC STORAGE 1C29	12	20	27	28	20	12	RCPT JROTC STORAGE 1C29		0.4		3/4"	12
12	3/4"			0.4	RCPT JROTC STORAGE 1C29	12	20	29	30	20	12	RCPT JROTC STORAGE 1C29			0.6	3/4"	12
12	3/4"	1.2			RCPT ATHLETIC WORKROOM 1C26	12	20	31	32	20	12	RCPT PE STAFF COLLAB 1C22	0.8			3/4"	12
12	3/4"		0.6		RCPT PE STAFF COLLAB 1C22	12	20	33	34	20	12	RCPT STAFF TOILET 1C24		0.4		3/4"	12
12	3/4'			1.0	DRINKING FOUNTAIN - GYM 1C03	12	20	35	36	20		SPARE			1.0		
12	3/4'	0.8			RCPT WEIGHT ROOM 1C18	12	20	37	38	20		SPARE	1.0				
12	3/4'		0.4		RCPT WEIGHT ROOM 1C18	12	20	39	40	20	12	RCPT WEIGHT ROOM 1C18		0.8		3/4"	12
12	3/4'			0.4	RCPT WEIGHT ROOM 1C18	12	20	41	42	20	12	DOOR PWR SUPPLY RM 1C32			1.0	3/4'	12
12	3/4"	0.4			RCPT JROTC STORAGE 1C29	12	20	43	44	20	12	RCPT JROTC1 (1C30)	0.4			3/4"	12
					SPACE ONLY			45	46			SPACE ONLY					
					SPACE ONLY			47	48			SPACE ONLY					
		3.6			RP2A		100/3	49	50	20		SPARE	1.0				
			3.6					51	52	20		SPARE		1.0			
				2.8				53	54	20		SPARE			1.0		
		7.0	7.4	5.8	SUB-TOTAL	KVA						KVA SUB-TOTAL	5.2	4.4	6.4		
												KVA GROSS-TOTAL	12.2	11.8	12.2		36.2

*GFI BREAKER

PANELBOARD AND WIRING SCHEDULE

PANELBOARD: **RP3** VOLTAGE: 208Y/120 AMPERES: 150 MLO 3PH/4W AIC: 10,000

GND	CON	LOAD A	LOAD B	LOAD C	DESIGNATION	WIRE	BKR	CKT	CKT	BKR	WIRE	DESIGNATION	LOAD A	LOAD B	LOAD C	CON	GND
12	3/4"	0.4			RCPT GYMNASIUM 1C03	12	20	1	2	20	12	SCOREBOARD GYMNASIUM 1C03	1.0			3/4"	12
12	3/4"		0.8		RCPT GYMNASIUM 1C03	12	20	3	4	20	12	RCPT GYMNASIUM 1C03		0.4		3/4"	12
12	3/4"			0.2	RCPT MECH 1C07	12	20	5	6	20	12	RCPT SEATING 1C06			1.4	3/4"	12
12	3/4"	0.2			RCPT MECH 1C05	12	20	7	8	20	12	RCPT GYMNASIUM 1C03	0.4			3/4"	12
12	3/4"		1.2		RCPT GYMNASIUM 1C03	12	20	9	10	20	12	RCPT GYMNASIUM 1C03		0.4		3/4"	12
12	3/4"			1.0	RCPT GYMNASIUM 1C03	12	20	11	12	20	12	SCOREBOARD GYMNASIUM 1C03			1.0	3/4"	12
12	3/4"	0.8			RCPT PRINCIPAL 1A09	12	20	13	14	20	12	RCPT PRINCIPAL 1A09	0.4			3/4"	12
12	3/4"		0.4		RCPT PRINCIPAL 1A09	12	20	15	16	20	12	RCPT ASST PRINCIPAL 1A07		1.4		3/4"	12
12	3/4"			1.2	RCPT SMSS 1A05	12	20	17	18	20	12	RCPT RECEPTION 1A01			1.2	3/4"	12
12	3/4"	0.6			RCPT RECEPTION 1A01, 1A03	12	20	19	20	20	12	RCPT RECEPTION 1A01	0.6			3/4"	12
12	3/4"		1.0		RCPT RECEPTION 1A01, 1A00, EXT	12	20	21	22	20	12	RCPT PARENTS CENTER 1A02		0.8		3/4"	12
12	3/4"			0.8	RCPT PARENTS CENTER 1A02	12	20	23	24	20	12	RCPT ENTRY CORRIDOR 1C00			0.6	3/4"	12
12	3/4"	0.4			RCPT COMMONS 1C01	12	20	25	26	20	12	RCPT COMMONS 1C01	0.4			3/4"	12
12	3/4"		0.4		RCPT COMMONS 1C01	12	20	27	28	20	12	RCPT MENS/WOMENS TOILET 1A11		1.0		3/4"	12
12	3/4"			0.2	RCPT CELERICAL 1A03	12	20	29	30	20	12	RCPT WORK ROOM 1A10			0.4	3/4"	12
12	3/4"	0.2			RCPT MAIL ROOM 1A10	12	20	31	32	20	12	RCPT WORK ROOM 1A10	0.4			3/4"	12
12	3/4"		0.2		RCPT WORK RM 1A08	12	20	33	34	20	12	RCPT ADMIN CONF 1A12		0.4		3/4"	12
12	3/4'			1.0	ADMIN CONF 1A12	12	20	35	36	20	12	RCPT ADMIN CONF 1A12			0.4	3/4"	12
8	1"	2.5			SITE MARQUIS	6	30	37	38	20	12	RCPT COMMONS 1C01	0.6			3/4"	12
12	3/4"		0.6		RCPT MECH 1C07	12	20	39	40	20	12	RCPT MECH 1C05		0.6		3/4"	12
12	3/4'			0.6	RCPT COMMONS 1C01	12	20	41	42	20	12	MARQUIS SIGN			1.0	3/4"	12
12	3/4"	1.2			FRIDGE 1A08	12	20	43	44	20	12	RCPTS GYM 1C03	0.8			3/4"	12
12	3/4"		1.2		DISHWASHER 1A08	12	20	45	46	20	12	RCPTS RM 1A16		1.0		3/4"	12
					SPACE ONLY			47	48	20	12	DDC PANEL 1A14			1.0	3/4"	12
		1.0			SPARE		20	49	50	20		SPARE	1.0				
			1.0		SPARE		20	51	52	20		SPARE		1.0			
				1.0	SPARE		20	53	54	20		SPARE			1.0		
		7.3	6.8	6.0	SUB-TOTAL	KVA						KVA SUB-TOTAL	5.6	7.0	8.0		
												KVA GROSS-TOTAL	12.9	13.8	14.0		40.7

PANELBOARD AND WIRING SCHEDULE

PANELBOARD: **RP1A** VOLTAGE: 208Y/120 AMPERES: 150 MLO 3PH/4W AIC: 10,000

GND	CON	LOAD A	LOAD B	LOAD C	DESIGNATION	WIRE	BKR	CKT	CKT	BKR	WIRE	DESIGNATION	LOAD A	LOAD B	LOAD C	CON	GND
		1.0			FUTURE ELEC HANDDRYER		20	1	2	20		FUTURE ELEC HANDDRYER	1.0			3/4"	12
			1.0		FUTURE ELEC HANDDRYER		20	3	4	20		FUTURE ELEC HANDDRYER		1.0		3/4"	12
				1.0	FUTURE ELEC HANDDRYER		20	5	6	20		FUTURE ELEC HANDDRYER			1.0	3/4"	12
		1.0			FUTURE ELEC HANDDRYER		20	7	8	20		FUTURE ELEC HANDDRYER	1.0			3/4"	12
12	3/4"				SPACE ONLY	12	20	9	10	20	12	SPACE ONLY				3/4"	12
12	3/4"				SPACE ONLY	12	20	11	12	20	12	SPACE ONLY				3/4"	12
12	3/4"				SPACE ONLY	12	20	13	14	20	12	SPACE ONLY				3/4"	12
12	3/4"				SPACE ONLY	12	20	15	16	20	12	SPACE ONLY				3/4"	12
12	3/4"				SPACE ONLY	12	20	17	18	20	12	SPACE ONLY				3/4"	12
12	3/4"				SPACE ONLY	12	20	19	20	20	12	SPACE ONLY				3/4"	12
12	3/4"				SPACE ONLY	12	20	21	22	20	12	SPACE ONLY				3/4"	12
12	3/4"				SPACE ONLY	12	20	23	24	20	12	SPACE ONLY				3/4"	12
12	3/4"				SPACE ONLY	12	20	25	26	20	12	SPACE ONLY				3/4"	12
12	3/4"				SPACE ONLY	12	20	27	28	20	12	SPACE ONLY				3/4"	12
12	3/4"				SPACE ONLY	12	20	29	30	20	12	SPACE ONLY				3/4"	12
12	3/4"				SPACE ONLY	12	20	31	32	20	8	SPACE ONLY				3/4"	12
10	3/4"				SPACE ONLY	10	20	33	34	20	10	SPACE ONLY				3/4"	12
10	3/4"				SPACE ONLY	10	20	35	36	20	12	SPACE ONLY				3/4"	12
10	3/4"				SPACE ONLY	10	20	37	38	20	12	SPACE ONLY				3/4"	12
10	3/4"				SPACE ONLY	10	20	39	40	20	12	SPACE ONLY				3/4"	12
10	3/4"				SPACE ONLY	10	20	41	42	20	12	SPACE ONLY				3/4"	12
10	3/4"				SPACE ONLY	10	20	43	44			SPACE ONLY					
10	3/4"				SPACE ONLY	10	20	45	46			SPACE ONLY					
					SPACE ONLY		20	47	48			SPACE ONLY					
		1.0			SPACE ONLY		20	49	50	20		SPARE	1.0				
			1.0		SPARE		20	51	52	20		SPARE		1.0			
				1.0	SPARE		20	53	54	20		SPARE			1.0		
		3.0	2.0	2.0	SUB-TOTAL	KVA						KVA SUB-TOTAL	3.0	2.0	2.0		
												KVA GROSS-TOTAL	6.0	4.0	4.0		14.0

File Path

RTA SUBMISSION - 10/13/2016

SYM DESCRIPTION DATE APPR

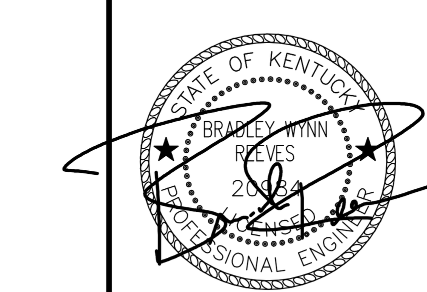

SEAL

EWING COLE
Federal Reserve Bank Building
100 North 6th Street
Philadelphia, PA 19106-1590
Tel: 215-923-2020 Fax: 215-574-0952

A/E INFO

APPROVED

FOR COMMANDER NAVFAC

ACTIVITY

SATISFACTORY TO DATE

BWR KDM BKB

PM/DM

BRANCH MANAGER

CHIEF ENG/ ARCH

FIRE PROTECTION

DEPARTMENT OF THE NAVY
NAVAL FACILITIES ENGINEERING COMMAND
NAVAL FACILITIES ENGINEERING COMMAND ~ WASHINGTON
MARINE CORPS BASE QUANTICO, VIRGINIA
DoDEA
MARINE CORPS BASE QUANTICO
QUANTICO, VA

REPLACE QUANTICO M/H SCHOOL

PANEL SCHEDULES

SCALE:

PROJECT NO.: P-021

CONSTR. CONTR. NO. W91236-15-C-0023

NAVFAC DRAWING NO. 13091413

SHEET 659 OF 789

E702

DRAWFORM REVISION: 10 MARCH 2009

PANELBOARD AND WIRING SCHEDULE

PANELBOARD: **RP4** | VOLTAGE: 208Y/120 | AMPERES: 225 | MLO | 3PH/4W | AIC: 10,000

GND	CON	LOAD A	LOAD B	LOAD C	DESIGNATION	WIRE	BKR	CKT	CKT	BKR	WIRE	DESIGNATION	LOAD A	LOAD B	LOAD C	CON	GND
8	1"	6.3			KILN	6	60/3	1	2	20	12	RCPTS CONF A134	1.0			3/4"	12
			6.3		-			3	4	20	12	RCPTS CONF A134		0.8		3/4"	12
				6.3	-			5	6	20	12	RCPTS CONF A134			0.6	3/4"	12
12	3/4"	0.6			RCPTS ART STORAGE 1C38	12	20	7	8	20	12	RCPTS CONF A134	0.4			3/4"	12
12	3/4"		1.2		RCPTS PSYCH 1A35	12	20	9	10	20	12	RCPTS CAREER COUNSELOR 1A32		1.4		3/4"	12
12	3/4"			1.4	RCPTS COUNSELOR 1A33	12	20	11	12	20	12	RCPTS ASSESSMENT 1A30			1.4	3/4"	12
12	3/4"	1.0			RCPTS RECORDS 1A31	12	20	13	14	20	12	RCPTS ASSESSOR 1A28	1.4			3/4"	12
12	3/4"		1.4		RCPTS REGISTRAR 1A29	12	20	15	16	20	12	RCPTS TREATMENT AREA 1A19		0.8		3/4"	12
12	3/4"			0.6	RCPTS CAREER INFO AREA 1A27	12	20	17	18	20	12	RCPTS TREATMENT AREA 1A19			0.2	3/4"	12
12	3/4"	0.8			RCPTS CAREER INFO AREA 1A27,1A	12	20	19	20	20	12	RCPTS TREATMENT AREA 1A19	0.8			3/4"	12
12	3/4"		0.4		RCPTS ENTRY CORRIDOR 1C00	12	20	21	22	20	12	RCPTS NURSE 1A18		0.8		3/4"	12
12	3/4"			0.8	RCPTS MECH 1A21	12	20	23	24	20	12	RCPTS NURSE WAITING A1A7			1.0	3/4"	12
12	3/4"	1.0			DOOR PWR SUPPLY RM 1A22/1A00	12	20	25	26	20	12	RCPTS ENTRY CORRIDOR 1C00	0.8			3/4"	12
12	3/4"		1.0		DOOR PWR SUPPLY RM 1C00/1A01	12	20	27	28	20	12	RCPTS ELEV MACH 1A20		0.6		3/4"	12
12	3/4"			1.0	RCPTS RM REGISTRAR 1A27	12	20	29	30	20	12	RCPTS RM 1A34			0.4	3/4"	12
		1.0			FUTURE ELEC HANDDRYER		20	31	32	20	12	ELEVATOR CONTROLLER	1.2			3/4"	12
			1.0		FUTURE ELEC HANDDRYER		20	33	34	20	12	RCPTS ELEV 1E01		0.2		3/4"	12
				1.0	FUTURE ELEC HANDDRYER		20	35	36	20	12	RCPTS ELEV 1E01 & LTS			1.2	3/4"	12
		1.0			FUTURE ELEC HANDDRYER		20	37	38	20	12	RCPTS ENTRY CORRIDOR 1C00	0.6			3/4"	12
12	3/4"		1.0		WATER FOUNTAIN	12	*20	39	40	20	12	ELEVATOR CAB/LIGHTS		1.2		3/4"	12
12	3/4"			1.0	WATER FOUNTAIN	12	*20	41	42	20	12	CORD REELS MS CTE 1C41			0.4	3/4"	12
12	3/4"	1			DDC CONTROL PANEL	12	20	43	44	20	12	CORD REELS MS CTE 1C41	0.4			3/4"	12
					SPACE ONLY			45	46	20	12	CORD REELS MS CTE 1C41		0.4		3/4"	12
					SPACE ONLY			47	48	20	12	CORD REELS ART 1C39			0.4	3/4"	12
		1.0			SPARE		20	49	50	20	12	CORD REELS ART 1C39	0.4			3/4"	12
			1.0		SPARE		20	51	52	20	12	CORD REELS ART 1C39		0.4		3/4"	12
				1.0	SPARE		20	53	54	20		SPARE			1.0		
		13.7	13.3	13.1	SUB-TOTAL KVA							KVA SUB-TOTAL	7.0	6.6	6.6		
												KVA GROSS-TOTAL	20.7	19.9	19.7		60.3

*GFI BREAKER

PANELBOARD AND WIRING SCHEDULE

PANELBOARD: **RP5** | VOLTAGE: 208Y/120 | AMPERES: 150 | MLO | 3PH/4W | AIC: 10,000

GND	CON	LOAD A	LOAD B	LOAD C	DESIGNATION	WIRE	BKR	CKT	CKT	BKR	WIRE	DESIGNATION	LOAD A	LOAD B	LOAD C	CON	GND
12	3/4"	0.8			RCPTS MENS TOILET 1C45	12	20	1	2	20	12	RCPTS ART 1C39	1.0			3/4"	12
12	3/4"		0.8		RCPTS WOMENS TOILET 1C44	12	20	3	4	20	12	RCPTS ART 1C39		0.4		3/4"	12
					SPACE ONLY			5	6	20	12	RCPTS ART 1C39			0.4	3/4"	12
12	3/4"	1.0			DRINKING FOUNTAIN	12	*20	7	8	20	12	RCPTS ART 1C39	0.4			3/4"	12
12	3/4"		0.4		RCPT ENTRY CORRIDOR 1C00	12	20	9	10	20	12	RCPTS ART 1C39		0.4		3/4"	12
12	3/4"			0.4	RCPTS MS CTE 1C41	12	20	11	12	20	12	RCPTS ART 1C39			0.6	3/4"	12
					SPACE ONLY			13	14	20	12	RCPTS ART 1C39	0.4			3/4"	12
12	3/4"		0.4		RCPTS MS CTE 1C41	12	20	15	16	20	12	RCPTS ART 1C39		0.4		3/4"	12
12	3/4"			0.4	RCPTS MS CTE 1C41	12	20	17	18	20	12	RCPTS ART 1C39			0.6	3/4"	12
		1.0			SPARE		20	19	20			SPACE ONLY					
			1.0		SPARE		20	21	22	20	12	RCPTS ART 1C39		0.8		3/4"	12
12	3/4"			0.2	RCPTS MS CTE 1C41	12	20	23	24	20	12	RCPT - MS CTE HUB 2F108			0.8	3/4"	12
					SPACE ONLY			25	26	20	12	RCPTS ART 1C39	0.4			3/4"	12
12	3/4"		0.2		RCPTS MS CTE 1C41	12	20	27	28	20	12	RCPTS PERFORMANCE 1C47-PROJ		0.4		3/4"	12
12	3/4"			0.2	RCPTS MS CTE 1C41	12	20	29	30	20	12	RCPTS PERFORMANCE 1C47-LTG			0.2	3/4"	12
12	3/4"	0.8			RCPTS 1C43,1C41,1C39	12	20	31	32	20	12	RCPTS PERFORMANCE 1C47	0.8			3/4"	12
12	3/4"		0.8		RCPTS MS CTE 1C41	12	20	33	34	20	12	DOOR PWR SUPPLY RM 1C39/41		1.0		3/4"	12
12	3/4"			0.8	RCPTS MS CTE 1C41	12	20	35	36	20	12	RCPTS RM 1C47			0.4	3/4"	12
12	3/4"	1.0			DOOR SUPPLY PWR RM 1S05	12	20	37	38	20	12	RCPTS PERFORMANCE 1C47	0.8			3/4"	12
12	3/4"		0.2		RCPTS PERFORMANCE 1C47-LTG	12	20	39	40	20	12	RCPTS PERFORMANCE 1C47		0.4		3/4"	12
12	3/4"			1.0	RCPTS PERFORMANCE 1C47	12	20	41	42	20	12	DOOR SUPPLY PWR			1.0	3/4"	12
12	3/4"	1			DOOR SUPPLY PWR VEST 1C00B	12	20	43	44	20	12	AV EQUIPMENT 1C47.1	1.0			3/4"	12
12	3/4"		1		DOOR SUPPLY PWR RM 1C46	12	20	45	46	20	12	AV EQUIPMENT 1C47.1		1.0		3/4"	12
12	3/4"			1.0	AV EQUIPMENT 1C59	12	20	47	48	20	12	AV EQUIPMENT 1C47.1			1.0	3/4"	12
12	3/4"	0.6			RCPTS MECH 1C37	12	20	49	50	20	12	DDC CONTROL PANEL	1.0			3/4"	12
			1.0		SPARE		20	51	52	20		SPARE		1.0			
				1.0	SPARE		20	53	54	20		SPARE			1.0		
		6.2	5.8	5.0	SUB-TOTAL KVA							KVA SUB-TOTAL	5.8	5.8	6.0		
												KVA GROSS-TOTAL	12.0	11.6	11.0		34.6

*GFI BREAKER

PANELBOARD AND WIRING SCHEDULE

PANELBOARD: **RP6** | VOLTAGE: 208Y/120 | AMPERES: 225 | MLO | 3PH/4W | AIC: 10,000

GND	CON	LOAD A	LOAD B	LOAD C	DESIGNATION	WIRE	BKR	CKT	CKT	BKR	WIRE	DESIGNATION	LOAD A	LOAD B	LOAD C	CON	GND
12	3/4"	1.0			DDC PANEL 1B07	12	20	1	2	20	12	RCPTS RM 1B12	0.4			3/4"	12
12	3/4"		1.0		RCPTS EXT, RM 1S03, 1B07	12	20	3	4	20	12	RCPTS MECH 1B07		0.4		3/4"	12
12	3/4"			0.4	RCPTS RM 1B10	12	20	5	6	20	12	RCPTS RM 1B12			0.8	3/4"	12
12	3/4"	0.4			RCPTS RM 1B14	12	20	7	8	20	12	RCPTS RM 1B12 - COW	1.0			3/4"	12
12	3/4"		0.4		RCPTS RM 1B10	12	20	9	10	20	12	RCPTS RM 1B12		0.4		3/4"	12
				0.4	RCPTS RM 1B10	12	20	11	12	20	12	RCPTS RM 1B12			0.4	3/4"	12
12	3/4"	0.8			RCPTS RM 1B10	12	20	13	14			SPACE ONLY					
					SPACE ONLY			15	16	20	12	RCPTS RM 1D18		0.4		3/4"	12
12	3/4"			1.0	RCPTS RM 1B10 - COW	12	20	17	18			SPACE ONLY					
					SPACE ONLY			19	20	20	12	RCPTS RM 1D18	0.4			3/4"	12
					SPACE ONLY			21	22	20	12	RCPTS RM 1D18 - COW		1.0		3/4"	12
					SPACE ONLY			23	24	20	12	RCPTS RM 1D18			0.8	3/4"	12
					SPACE ONLY			25	26			SPACE ONLY					
12	3/4"		0.4		RCPTS RM 1B14	12	20	27	28	20	12	RCPTS RM 1D18		0.4		3/4"	12
					SPACE ONLY			29	30	20	12	RCPTS RM 1D18			0.8	3/4"	12
12	3/4"	1.0			RCPTS RM 1B14	12	20	31	32	20	12	RCPTS RM 1B12	1.0			3/4"	12
12	3/4"		0.8		RCPTS RM 1B14	12	20	33	34	20	12	DOOR PWR SUPPLY RM 1S03		0.5		3/4"	12
12	3/4'			0.4	RCPTS RM 1B14	12	20	35	36			SPACE ONLY					
					SPACE ONLY			37	38			SPACE ONLY					
					SPACE ONLY			39	40			SPACE ONLY					
					SPACE ONLY			41	42			SPACE ONLY					
					SPACE ONLY			43	44			SPACE ONLY					
					SPACE ONLY			45	46			SPACE ONLY					
					SPACE ONLY			47	48			SPACE ONLY					
		1.0			SPARE		20	49	50	20		SPARE	1.0				
			1.0		SPARE		20	51	52	20		SPARE		1.0			
				1.0	SPARE		20	53	54	20		SPARE			1.0		
		4.2	3.6	3.2	SUB-TOTAL KVA							KVA SUB-TOTAL	3.8	4.1	3.8		
												KVA GROSS-TOTAL	8.0	7.7	7.0		22.7
												FED FROM: SDP3					

PANELBOARD AND WIRING SCHEDULE

PANELBOARD: **RP7** | VOLTAGE: 208Y/120 | AMPERES: 225 | MLO | 3PH/4W | AIC: 10,000

GND	CON	LOAD A	LOAD B	LOAD C	DESIGNATION	WIRE	BKR	CKT	CKT	BKR	WIRE	DESIGNATION	LOAD A	LOAD B	LOAD C	CON	GND
					SPACE ONLY			1	2	20	12	RCPTS RM 1B04	0.4			3/4"	12
12	3/4"		0.6		RCPTS RM 1B00	12	20	3	4	20	12					3/4"	12
12	3/4"			0.8	RCPTS RM 1B00	12	20	5	6	20	12	RCPTS RM 1B04			0.4	3/4"	12
					SPACE ONLY	12	20	7	8	20	12	RCPTS RM 1B03	0.4			3/4"	12
12	3/4"		0.4		RCPTS RM 1B00	12	20	9	10	20	12	RCPTS RM 1B03		0.4		3/4"	12
12	3/4"			0.4	RCPTS RM 1B08	12	20	11	12			SPACE ONLY					
12	3/4"	0.8			RCPTS RM 1B08	12	20	13	14	20	12	RCPTS RM 1B03	0.2			3/4"	12
12	3/4"		0.4		RCPTS RM 1B08	12	20	15	16								
12	3/4"			0.6	RCPTS RM 1B08,1B10	12	20	17	18			SPACE ONLY					
12	3/4"	1.0			RCPTS RM 1B08- COW	12	20	19	20			SPACE ONLY					
12	3/4"		0.4		RCPTS RM 1B08	12	20	21	22			SPACE ONLY					
12	3/4"			0.4	RCPTS RM 1B08	12	20	23	24			SPACE ONLY					
12	3/4"	1.2			RCPTS RM 1B08	12	20	25	26			SPACE ONLY					
12	3/4"		0.8		RCPTS RM 1B03	12	20	27	28			SPACE ONLY					
12	3/4"			0.2	RCPTS RM 1B03	12	20	29	30			SPACE ONLY					
12	3/4"	0.4			RCPTS RM 1B03	12	20	31	32			SPACE ONLY					
					SPACE ONLY			33	34			SPACE ONLY					
12	3/4'			0.2	RCPTS RM 1B03	12	20	35	36			SPACE ONLY					
12	3/4"	0.4			RCPTS RM 1B00	12	20	37	38			SPACE ONLY					
12	3/4"		0.6		RCPTS RM 1B00	12	20	39	40			SPACE ONLY					
					SPACE ONLY			41	42			SPACE ONLY					
					SPACE ONLY			43	44			SPACE ONLY					
					SPACE ONLY			45	46			SPACE ONLY					
					SPACE ONLY			47	48			SPACE ONLY					
		1.0			SPARE		20	49	50	20		SPARE	1.0				
			1.0		SPARE		20	51	52	20		SPARE		1.0			
				1.0	SPARE		20	53	54	20		SPARE			1.0		
		4.8	4.2	3.6	SUB-TOTAL KVA							KVA SUB-TOTAL	2.0	1.4	1.4		
												KVA GROSS-TOTAL	6.8	5.6	5.0		17.4
												FED FROM: SDP3					

SYM | DESCRIPTION | DATE | APPR

SEAL: STATE OF KENTUCKY, BRADLEY WYNN REEVES, 20…4, LICENSED PROFESSIONAL ENGINEER

EWING COLE
Federal Reserve Bank Building
100 North 6th Street
Philadelphia, PA 19106-1590
Tel: 215-923-2020 Fax: 215-574-0952
A/E INFO

APPROVED

FOR COMMANDER NAVFAC
ACTIVITY

SATISFACTORY TO | DATE
BWR | KDM | BKB
PM/DM
BRANCH MANAGER
CHIEF ENG/ ARCH
FIRE PROTECTION

DEPARTMENT OF THE NAVY
NAVAL FACILITIES ENGINEERING COMMAND
NAVAL FACILITIES ENGINEERING COMMAND ~ WASHINGTON
MARINE CORPS BASE QUANTICO, VIRGINIA
DoDEA
MARINE CORPS BASE QUANTICO
QUANTICO, VA

REPLACE QUANTICO M/H SCHOOL

PANEL SCHEDULES

SCALE:
PROJECT NO.: P-021
CONSTR. CONTR. NO. W91236-15-C-0023
NAVFAC DRAWING NO. 13091414
SHEET 660 OF 789
E703

RTA SUBMISSION - 10/13/2016

DRAWFORM REVISION: 10 MARCH 2009

File Path

PANELBOARD AND WIRING SCHEDULE

PANELBOARD: **RP8** | VOLTAGE: 208Y/120 | AMPERES: 225 | MCB 3PH/4W | AIC: 10,000

GND	CON	LOAD A	LOAD B	LOAD C	DESIGNATION	WIRE	BKR	CKT	CKT	BKR	WIRE	DESIGNATION	LOAD A	LOAD B	LOAD C	CON	GND
12	3/4"	0.8			RCPTS RM 1C01	12	20	1	2	20	12	RCPTS RM 1D11	0.8			3/4"	12
12	3/4"		0.8		RCPTS RM 1C01	12	20	3	4	20	12	RCPTS RM 1D11		0.4		3/4"	12
12	3/4"			0.6	RCPTS RM 1C01	12	20	5	6	20	12	RCPTS RM 1D11			0.4	3/4"	12
12	3/4"	1.0			RCPTS RM 1B05, 2F115	12	20	7	8	20	12	RCPTS RM 1E05	0.2			3/4"	12
12	3/4"		0.8		RCPTS RM 1B06	12	20	9	10	20	12	RCPTS RM 1E05		0.4		3/4"	12
12	3/4"			1.0	RCPTS RM 1B06	12	20	11	12	15	12	TP-3			1.0	3/4"	12
12	3/4"	0.8			RCPTS RM 1B06	12	20	13	14	20	12	EQUIPMENT RACK RM 2C13	1.0			3/4"	12
12	3/4"		0.4		RCPTS RM 1B02	12	20	15	16	20	12	RCPTS RM 1E05		0.4		3/4"	12
					SPACE ONLY			17	18	20	12	RCPTS RM 1E01			1.0	3/4"	12
12	3/4"	0.4			RCPTS RM 1B02	12	20	19	20	20	12	RCPTS RM 1E01 - FLOOR BOX	1.0			1"	12
12	3/4"		0.2		RCPTS RM 1B02	12	20	21	22	20	12	RCPTS RM 1E01 - FLOOR BOX		1.0		1"	12
					SPACE ONLY			23	24	20	12	RCPTS RM 1E01 - FLOOR BOX			1.0	1"	12
12	3/4"	0.8			RCPTS RM 1B02	12	20	25	26	20	12	RCPTS RM 1E01 - FLOOR BOX	1.0			1"	12
12	3/4"		0.4		RCPTS RM 1B02	12	20	27	28	20	12	RCPTS RM 1E01 - FLOOR BOX		1.0		1"	12
12	3/4"			0.4	RCPTS RM 1B02	12	20	29	30	20	12	EQUIPMENT RACK RM 2C13			1.0	3/4"	12
12	3/4"	0.8			RCPTS RM 1B02	12	20	31	32	20	12	RCPTS RM 1E01.1	0.8			3/4"	12
					SPACE ONLY			33	34	20	12	RCPTS RM 1E01.1		0.4		3/4"	12
12	3/4'			0.4	RCPTS RM 1B02	12	20	35	36	20	12	RCPTS RM 1E01.1			1.0	3/4"	12
12	3/4'	1.2			RCPTS RM 1E07	12	20	37	38	20	12	RCPTS RM 1E01	0.4			3/4"	12
12	3/4'		0.4		RCPTS RM 1D01	12	20	39	40			SPACE ONLY					
12	3/4'			0.8	RCPTS RM 1D01	12	20	41	42	20	12	RCPTS RM 1E01.1			0.8	3/4"	12
12	3/4'	0.8			RCPTS RM 1D01	12	20	43	44	20	12	RCPTS RM 1E01.1	0.4			3/4"	12
12	3/4'		0.8		RCPTS RM 1D01	12	20	45	46	20	12	RCPTS RM 1E01.1		0.4		3/4"	12
					SPACE ONLY			47	48	20	12	RCPTS RM 1E01.1			0.4	3/4"	12
		1.0			SPARE		20	49	50	20		SPARE	1.0				
			1.0		SPARE		20	51	52	20		SPARE		1.0			
				1.0	SPARE		20	53	54	20		SPARE			1.0		
		7.6	4.8	4.2	SUB-TOTAL KVA							KVA SUB-TOTAL	6.6	5.0	7.6		
												KVA GROSS-TOTAL	14.2	9.8	11.8		35.8

FED FROM: SDP3

PANELBOARD AND WIRING SCHEDULE

PANELBOARD: **RP9** | VOLTAGE: 208Y/120 | AMPERES: 225 | MLO 3PH/4W | AIC: 10,000

GND	CON	LOAD A	LOAD B	LOAD C	DESIGNATION	WIRE	BKR	CKT	CKT	BKR	WIRE	DESIGNATION	LOAD A	LOAD B	LOAD C	CON	GND
12	3/4"	1.0			RCPTS MECH 6 1D13	12	20	1	2	20	12	RCPTS LEARNING STUDIO 1 1D16	0.8			3/4"	12
12	3/4"		0.6		RCPTS 1S04, 1D12	12	20	3	4	20	12	RCPTS LEARNING STUDIO 1 1D16		0.4		3/4"	12
12	3/4"			0.6	RCPTS LEARNING STUDIO 3 1D12	12	20	5	6			SPACE ONLY					
12	3/4"	0.4			RCPTS LEARNING STUDIO 3 1D12	12	20	7	8	20	12	RCPTS LEARNING STUDIO 1 1D16	0.4			3/4"	12
					SPACE ONLY			9	10	20	12	RCPTS LEARNING STUDIO 1 1D16		0.2		3/4"	12
12	3/4"			0.4	RCPTS LEARNING STUDIO 3 1D12	12	20	11	12	20	12	RCPTS LEARNING STUDIO 1 1D16			0.4	3/4"	12
12	3/4"	0.2			RCPTS LEARNING STUDIO 3 1D12	12	20	13	14	20	12	SPACE ONLY				3/4"	12
12	3/4"		0.4		RCPTS LEARNING STUDIO 3 1D12	12	20	15	16	20	12	RCPTS LEARNING STUDIO 1 1D16		0.8		3/4"	12
12	3/4"				SPACE ONLY	12	20	17	18	20	12	DDC PANEL 1D13			1.0	3/4"	12
12	3/4"	0.8			RCPTS LEARNING STUDIO 3 1D12	12	20	19	20	20	12	DOOR PWR SUPPLY RM 1S04	0.5			3/4"	12
					SPACE ONLY			21	22	10	12	RCPTS LEARNING STUDIO 3 1D12		0.4		3/4"	12
12	3/4"			1.2	RCPTS LEARNING STUDIIO 4 1D14	12	20	23	24			SPACE ONLY					
12	3/4"	0.4			RCPTS LEARNING STUDIO 4 1D14	12	20	25	26			SPACE ONLY					
					SPACE ONLY			27	28			SPACE ONLY					
12	3/4"			0.8	RCPTS LEARNING STUDIO 4 1D14	12	20	29	30			SPACE ONLY					
12	3/4"	0.2			RCPTS LEARNING STUDIO 4 1D14	12	20	31	32			SPACE ONLY					
12	3/4"		0.4		RCPTS LEARNING STUDIO 4 1D14	12	20	33	34			SPACE ONLY					
					SPACE ONLY			35	36			SPACE ONLY					
12	3/4'	0.4			RCPTS LEARNING STUDIO 4 1D14	12	20	37	38			SPACE ONLY					
					SPACE ONLY			39	40			SPACE ONLY					
					SPACE ONLY			41	42			SPACE ONLY					
					SPACE ONLY			43	44			SPACE ONLY					
					SPACE ONLY			45	46			SPACE ONLY					
					SPACE ONLY			47	48			SPACE ONLY					
		1.0			SPARE		20	49	50	20		SPARE	1.0				
			1.0		SPARE		20	51	52	20		SPARE		1.0			
				1.0	SPARE		20	53	54	20		SPARE			1.0		
		4.4	2.4	4.0	SUB-TOTAL KVA							KVA SUB-TOTAL	2.7	2.8	2.4		
												KVA GROSS-TOTAL	7.1	5.2	6.4		18.7

FED FROM: SDP3

PANELBOARD AND WIRING SCHEDULE

PANELBOARD: **RP10** | VOLTAGE: 208Y/120 | AMPERES: 225 | MLO 3PH/4W | AIC: 10,000

GND	CON	LOAD A	LOAD B	LOAD C	DESIGNATION	WIRE	BKR	CKT	CKT	BKR	WIRE	DESIGNATON	LOAD A	LOAD B	LOAD C	CON	GND
12	3/4"	0.8			RCPTS HS HUB 1D00	12	20	1	2	20	12	RCPTS HS HUB 1 1D00	0.8			3/4"	12
12	3/4"		1.0		RCPTS HS ONE TO ONE 1 1D02	12	20	3	4	20	12	RCPTS HS HUB 1 1D00		0.8		3/4"	12
12	3/4"			0.6	RCPTS HS HUB 1 1D00	12	20	5	6	20	12	RCPTS HS HUB 1 1D00			0.6	3/4"	12
12	3/4"	0.4			RCPTS HS ONE TO ONE 1 1D02	12	20	7	8	20	12	RCPTS HS GROUP LEARNING 1 1D0	0.6			3/4"	12
12	3/4"		0.4		RCPTS HS ONE TO ONE 1 1D02	12	20	9	10			SPACE ONLY					
12	3/4"			0.4	RCPTS HS ONE TO ONE 1 1D02	12	20	11	12	20	12	RCPTS HS GROUP LEARNING 1 1D0			0.4	3/4"	12
12	3/4"	0.4			RCPTS LEARNING STUDIO 1 1D08	12	20	13	14			SPACE ONLY					
12	3/4"				SPACE ONLY	12	20	15	16			SPACE ONLY					
12	3/4"			0.8	RCPTS LEARNING STUDIO 1 1D08	12	20	17	18	20	12	RCPTS HS GROUP LEARNING 1 1D0			0.8	3/4"	12
12	3/4"	0.6			RCPTS LEARNING STUDIO 1 1D08	12	20	19	20			SPACE ONLY					
12	3/4"		0.8		RCPTS LEARNING STUDIO 2 1D10	12	20	21	22	20	12	RCPTS HS GROUP LEARNING 1 1D0		0.4		3/4"	12
12	3/4"			0.4	RCPTS LEARNING STUDIO 1 1D08	12	20	23	24	20	12	RCPTS HS GROUP LEARNING 1 1D0			0.4	3/4"	12
					SPACE ONLY			25	26			SPACE ONLY					
12	3/4"		0.4		RCPTS LEARNING STUDIO 1 1D08	12	20	27	28			SPACE ONLY					
12	3/4"			0.4	RCPTS LEARNING STUDIO 2 1D10	12	20	29	30			SPACE ONLY					
					SPACE ONLY			31	32			SPACE ONLY					
12	3/4"		0.4		RCPTS LEARNING STUDIO 2 1D10	12	20	33	34			SPACE ONLY					
12	3/4'			0.2	RCPTS LEARNING STUDIO 2 1D10	12	20	35	36			SPACE ONLY					
12	3/4'	0.8			RCPTS LEARNING STUDIO 2 1D10	12	20	37	38			SPACE ONLY					
12	3/4'				SPACE ONLY	12	20	39	40			SPACE ONLY					
12	3/4'			0.4	RCPTS LEARNING STUDIO 2 1D10	12	20	41	42			SPACE ONLY					
12	3/4"	0.2			RCPTS LEARNING STUDIO 1 1D08	12	20	43	44			SPACE ONLY					
					SPACE ONLY			45	46			SPACE ONLY					
					SPACE ONLY			47	48			SPACE ONLY					
		1.0			SPARE		20	49	50	20		SPARE	1.0				
			1.0		SPARE		20	51	52	20		SPARE		1.0			
				1.0	SPARE		20	53	54	20		SPARE			1.0		
		4.2	4.0	4.2	SUB-TOTAL KVA							KVA SUB-TOTAL	2.4	2.2	3.2		
												KVA GROSS-TOTAL	6.6	6.2	7.4		20.2

FED FROM SDP3

PANELBOARD AND WIRING SCHEDULE

PANELBOARD: **RP11** | VOLTAGE: 208Y/120 | AMPERES: 225 | MLO 3PH/4W | AIC: 10,000

GND	CON	LOAD A	LOAD B	LOAD C	DESIGNATION	WIRE	BKR	CKT	CKT	BKR	WIRE	DESIGNATION	LOAD A	LOAD B	LOAD C	CON	GND
12	3/4"	0.4			RCPTS HS CHEMISTRY 1D06	12	20	1	2	20	12	RCPTS CHEM 1D05	0.6			3/4"	12
12	3/4"		0.4		RCPTS HS CHEMISTRY 1D06	12	20	3	4	20	12	RCPTS SCI PREP 1 1D03		0.2		3/4"	12
12	3/4"			0.4	RCPTS HS CHEMISTRY 1D06	12	20	5	6	20	12	RCPTS SCI PREP 1 1D03			0.6	3/4"	12
12	3/4"	0.2			RCPTS HS CHEMISTRY 1D06	12	20	7	8	20	12	RCPTS HS PHYSICAL SCIENCE 1D04	0.8			3/4"	12
12	3/4"		0.4		RCPTS HS CHEMISTRY 1D06	12	20	9	10	20	12	RCPTS HS PHYSICAL SCIENCE 1D04		0.8		3/4"	12
12	3/4"			0.8	RCPTS HS CHEMISTRY 1D06	12	20	11	12	20	12	RCPTS HS PHYSICAL SCIENCE 1D04			0.8	3/4"	12
12	3/4"	1.0			RCPTS HS CHEMISTRY 1D06	12	20	13	14	20	12	RCPTS HS PHYSICAL SCIENCE 1D04	0.8			3/4"	12
12	3/4"		0.6		RCPTS HS CHEMISTRY 1D06	12	20	15	16	20	12	RCPTS HS PHYSICAL SCIENCE 1D04		0.8		3/4"	12
12	3/4"			1.0	RCPTS HS CHEMISTRY 1D06	12	20	17	18	20	12	RCPTS HS PHYSICAL SCIENCE 1D04			0.2	3/4"	12
12	3/4"	0.4			RCPTS HS CHEMISTRY 1D06	12	20	19	20	20	12	RCPTS HS PHYSICAL SCIENCE 1D04	0.8			3/4"	12
12	3/4"		0.4		RCPTS HS CHEMISTRY 1D06	12	20	21	22	20	12	RCPTS HS PHYSICAL SCIENCE 1D04		1.4		3/4"	12
12	3/4"			0.4	RCPTS HS CHEMISTRY 1D06	12	20	23	24	20	12	RCPTS HS PHYSICAL SCIENCE 1D04			0.8	3/4"	12
12	3/4"	0.2			FB HS CHEMISTRY 1D06	12	20	25	26	20	12	RCPTS DISHWASHER SCI PREP 1D03	1.0			3/4"	12
12	3/4"		0.2		FB HS CHEMISTRY 1D06	12	20	27	28	20	12	RCPTS HS PHYSICAL SCIENCE 1D04		0.4		3/4"	12
12	3/4"			0.2	FB HS CHEMISTRY 1D06	12	20	29	30	20	12	RCPTS KITCHENETTE 1E04 - DW			0.2	3/4"	12
12	3/4"	0.2			FB HS CHEMISTRY 1D06	12	20	31	32	20	12	RCPTS KITCHENETTE 1E04 COFFEE	0.2			3/4"	12
12	3/4"		0.2		FB HS CHEMISTRY 1D06	12	20	33	34	20	12	RCPTS KITCHENETTE 1E04		0.8		3/4"	12
12	3/4'			1.0	SPACE ONLY	12	20	35	36	20	12	RCPTS KITCHENETTE - REF			1.0	3/4"	12
12	3/4'	1.0			RCPTS RM 1D07	12	20	37	38	20	12	RCPTS RM 1E02	0.6			3/4"	12
12	3/4'		1.0		RCPTS RM 1D07	12	20	39	40	20	12	RCPTS RM 1D07		1.0		3/4"	12
					SPACE ONLY			41	42	20	12	RCPTS KITCHENETTE 1E04			0.8	3/4"	12
					SPACE ONLY			43	44	20	12	RCPTS KITCHENETTE 1E04	0.8			3/4"	12
					SPACE ONLY			45	46	20	12					3/4"	12
					SPACE ONLY			47	48	20	12	RCPTS RM 1D07			1.0	3/4"	12
		1.0			SPARE		20	49	50	20		SPARE	1.0				
			1.0		SPARE		20	51	52	20		SPARE		1.0			
				1.0	SPARE		20	53	54	20		SPARE			1.0		
		4.4	4.2	4.8	SUB-TOTAL KVA							KVA SUB-TOTAL	6.6	6.4	6.4		
												KVA GROSS-TOTAL	11.0	10.6	11.2		32.8

FED FROM: SDP3

SYM | DESCRIPTION | DATE | APPR

NAVFAC

STATE OF KENTUCKY BRADLEY WYNN REEVES 20984 LICENSED PROFESSIONAL ENGINEER

SEAL

EWING COLE
Federal Reserve Bank Building
100 North 6th Street
Philadelphia, PA 19106-1590
Tel: 215-923-2020 Fax: 215-574-0952

A/E INFO

APPROVED

FOR COMMANDER NAVFAC
ACTIVITY

SATISFACTORY TO DATE
BWR KDM BKB
PM/DM
BRANCH MANAGER
CHIEF ENG/ ARCH
FIRE PROTECTION

DEPARTMENT OF THE NAVY
NAVAL FACILITIES ENGINEERING COMMAND
NAVAL FACILITIES ENGINEERING COMMAND ~ WASHINGTON
MARINE CORPS BASE QUANTICO, VIRGINIA
DoDEA
MARINE CORPS BASE QUANTICO
QUANTICO, VA

REPLACE QUANTICO M/H SCHOOL

PANEL SCHEDULES

SCALE:
PROJECT NO.: P-021
CONSTR. CONTR. NO. W91236-15-C-0023
NAVFAC DRAWING NO. 13091415
SHEET 661 OF 789
E704

RTA SUBMISSION - 10/13/2016

DRAWFORM REVISION: 10 MARCH 2009

File Path

PANELBOARD AND WIRING SCHEDULE

PANELBOARD: **RP11A** | VOLTAGE: 208Y/120 | AMPERES: 225 | MLO | 3PH/4W | AIC: 10,000

GND	CON	LOAD A	LOAD B	LOAD C	DESIGNATION	WIRE	BKR	CKT	CKT	BKR	WIRE	DESIGNATION	LOAD A	LOAD B	LOAD C	CON	GND
12	3/4"	0.5			DOOR PWR SUPPLY RM 1C00	12	20	1	2	15	12	TP-3	0.4			3/4"	12
12	3/4"		0.5		DOOR PWR SUPPLY RM 1C00	12	20	3	4			SPACE ONLY					
12	3/4"			0.5	DOOR PWR SUPPLY RM 1E05	12	20	5	6			SPACE ONLY					
12	3/4"	0.7			RCPT RM 1E05 - PRINTER	12	20/2	7	8			SPACE ONLY					
			0.7		-			9	10			SPACE ONLY					
12	3/4"			0.4	RCPTS RM 1B01	12	20	11	12			SPACE ONLY					
12	3/4"	0.4			RCPTS RM 1B01	12	20	13	14			SPACE ONLY					
					SPACE ONLY			15	16			SPACE ONLY					
					SPACE ONLY			17	18			SPACE ONLY					
12	3/4"	0.4			RCPTS RM 1B01	12	20	19	20			SPACE ONLY					
12	3/4"		1.2		RCPTS RM 1B01	12	20	21	22			SPACE ONLY					
12	3/4"			0.4	RCPTS RM 1B01	12	20	23	24			SPACE ONLY					
12	3/4"				SPACE ONLY	12	20	25	26			SPACE ONLY					
					SPACE ONLY	12	20	27	28			SPACE ONLY					
					SPACE ONLY	12	20	29	30			SPACE ONLY					
					SPACE ONLY	12	20	31	32			SPACE ONLY					
					SPACE ONLY	12	20	33	34			SPACE ONLY					
					SPACE ONLY	12	20	35	36			SPACE ONLY					
					SPACE ONLY	12	20	37	38			SPACE ONLY					
					SPACE ONLY	12	20	39	40			SPACE ONLY					
					SPACE ONLY	12	20	41	42			SPACE ONLY					
					SPACE ONLY	12	20	43	44			SPACE ONLY					
					SPACE ONLY	12	20	45	46			SPACE ONLY					
					SPACE ONLY	12	20	47	48			SPACE ONLY					
		1.0			SPARE		20	49	50	20		SPARE					
			1.0		SPARE		20	51	52	20		SPARE		1.0			
				1.0	SPARE		20	53	54	20		SPARE			1.0		
		3.0	3.4	2.3	SUB-TOTAL KVA							KVA SUB-TOTAL	0.4	1.0	1.0		
												KVA GROSS-TOTAL	3.4	4.4	3.3		11.0
												FED FROM: SDP3					

PANELBOARD AND WIRING SCHEDULE

PANELBOARD: **RP12** | VOLTAGE: 208Y/120 | AMPERES: 225 | MCB | 3PH/4W | AIC: 10,000

GND	CON	LOAD A	LOAD B	LOAD C	DESIGNATION	WIRE	BKR	CKT	CKT	BKR	WIRE	DESIGNATION	LOAD A	LOAD B	LOAD C	CON	GND
12	3/4"	1.2			RCPTS STAGE STORAGE 1C59	12	20	1	2	20	12	THEATRICAL LTG CONTROLS	0.4			3/4"	12
12	3/4"		0.6		RCPTS WOMENS DRESSING 1C57	12	20	3	4	20	12	RCPTS MUSIC 1C49		0.4		3/4"	12
12	3/4"			0.8	RCPTS WOMENS DRESSING 1C57	12	20	5	6			SPACE ONLY					
12	3/4"	0.4			RCPTS WOMENS DRESSING 1C57	12	20	7	8			SPACE ONLY					
12	3/4"		1.0		RCPTS WOMENS DRESSING 1C57	12	20	9	10	20	12	RCPTS MUSIC 1C49		0.4		3/4"	12
				1.0	SPARE		20	11	12	20	12	RCPTS STAGE 1C47.1			0.4	3/4"	12
		1.0			SPARE		20	13	14	20	12	RCPTS MUSIC 1C49	0.4			3/4"	12
12	3/4"		1.0		JNCTN WOMENS DRESSING 1C57	12	20	15	16	20	12	RCPTS MUSIC 1C49		0.4		3/4"	12
12	3/4"			1.0	DRESSING TABLE 1C57	12	20	17	18	20	12	RCPTS MUSIC 1C49			1.0	3/4"	12
12	3/4"	1.0			RCPTS 1C49,1C52	12	20	19	20	20	12	RCPTS MUSIC 1C49	0.6			3/4"	12
12	3/4"		0.8		RCPTS MENS DRESSING 1C55	12	20	21	22	20	12	RCPTS MUSIC 1C49,EXT		1.0		3/4"	12
12	3/4"			0.4	RCPTS MENS DRESSING 1C55	12	20	23	24	20	12	RCPTS MUSIC 1C49			0.8	3/4"	12
12	3/4"	1.0			RCPTS MENS DRESSING 1C55	12	20	25	26	20	12	RCPTS MUSIC 1C49	0.4			3/4"	12
			1.0		SPARE		20	27	28	20	12	RCPTS MUSIC LIBRARY 1C51		0.8		3/4"	12
				1.0	SPARE		20	29	30	20	12	RCPTS MUSIC PRACTICE 1C50			0.4	3/4"	12
12	3/4"	1.0			JNCTN MENS DRESSING 1C55	12	20	31	32	20	12	RCPTS MUSIC PRACTICE 1C50	0.8			3/4"	12
12	3/4"		1.0		DRESSING TABLE 1C55	12	20	33	34	20	12	RCPTS MUSIC PRACTICE 1C50		0.4		3/4"	12
12	3/4'			0.6	RCPTS MENS DRESSING 1C55	12	20	35	36	20	12	RCPTS MUSIC PRACTICE 1C50			0.8	3/4"	12
12	3/4'	0.8			RCPTS MECH 4 1C53	12	20	37	38	20	12	RCPTS STAGE 1C47.1	0.4			3/4"	12
12	3/4"		0.8		RCPTS STAGE 1C47.1	12	20	39	40	20	12	RCPTS STAGE 1C47.1		0.6		3/4"	12
12	3/4"			0.8	RCPTS STAGE 1C47.1	12	20	41	42	20	12	RCPTS STAGE 1C47.1			0.8	3/4"	12
12	3/4"	1			RCPTS STAGE 1C47.1	12	20	43	44	20	12	RCPTS STAGE 1C47.1	0.8			3/4"	12
12	3/4"		0.4		RCPTS STAGE 1C47.1	12	20	45	46	20	12	RCPTS STAGE 1C47.1		0.4		3/4"	12
12	3/4"			1.0	RCPTS STAGE 1C47.1	12	20	47	48	20	12	RCPTS STAGE 1C47.1			0.8	3/4"	12
12	3/4"	1.0			RCPTS STAGE 1C47.1	12	20	49	50	20	12	AV RACK RM 1C49	1.0			3/4"	12
12	3/4"		1.0		WATER FOUNTAIN	12	*20	51	52	20	12	RCPTS STAGE 1C47.1		1.0		3/4"	12
12	3/4"			1.0	RCPTS STAGE 1C47.1	12	20	53	54	20		SPARE			1.0		
		8.4	7.6	7.6	SUB-TOTAL KVA							KVA SUB-TOTAL	4.8	5.4	6.0		
												KVA GROSS-TOTAL	13.2	13.0	13.6		39.8
												FED FROM: SDP3					

* GFI BREAKER

PANELBOARD AND WIRING SCHEDULE

PANELBOARD: **RP13** | VOLTAGE: 208Y/120 | AMPERES: 225 | MLO | 3PH/4W | AIC: 10,000

GND	CON	LOAD A	LOAD B	LOAD C	DESIGNATION	WIRE	BKR	CKT	CKT	BKR	WIRE	DESIGNATION	LOAD A	LOAD B	LOAD C	CON	GND
12	3/4"	0.8			RCPTS LRNG STUDIO 4 2D18	12	20	1	2	20	12	RCPTS LRNG STUDIO 14 2B14	0.8			3/4"	12
12	3/4"		0.4		RCPTS LRNG STUDIO 4 2D18	12	20	3	4	20	12	RCPTS LRNG STUDIO 14 2B14		0.4		3/4"	12
12	3/4"			0.4	RCPTS LRNG STUDIO 4 2D18	12	20	5	6	20	12	RCPTS LRNG STUDIO 14 2B14			0.8	3/4"	12
12	3/4"	0.4			RCPTS LRNG STUDIO 4 2D18	12	20	7	8	20	12	RCPTS LRNG STUDIO 14 2B14	0.2			3/4"	12
					SPACE ONLY			9	10	20	12	RCPTS LRNG STUDIO 14 2B14		0.4		3/4"	12
					SPACE ONLY	12	20	11	12	20	12	RCPTS LRNG STUDIO 14 2B14			0.4	3/4"	12
12	3/4"	0.4			RCPTS LRNG STUDIO 13 2B16	12	20	13	14	20		SPACE ONLY					
12	3/4"		0.4		RCPTS LRNG STUDIO 13 2B16	12	20	15	16	20	12	RCPTS LRNG STUDIO 15 2B12		0.4		3/4"	12
12	3/4"			0.8	RCPTS LRNG STUDIO 13 2B16	12	20	17	18	20	12	RCPTS LRNG STUDIO 15 2B12			0.4	3/4"	12
12	3/4"	0.8			RCPTS LRNG STUDIO 13 2B16	12	20	19	20	20		SPACE ONLY					
12	3/4"		0.2		RCPTS LRNG STUDIO 13 2B16	12	20	21	22	20	12	RCPTS LRNG STUDIO 15 2B12		0.4		3/4"	12
12	3/4"			0.8	RCPTS LRNG STUDIO 13 2B16	12	20	23	24	20	12	RCPTS LRNG STUDIO 15 2B12			0.2	3/4"	12
12	3/4"	0.8			RCPTS LRNG STUDIO 13 2B16	12	20	25	26	20	12	RCPTS LRNG STUDIO 15 2B12	0.4			3/4"	12
12	3/4"		0.8		RCPTS LRNG 2D18	12	20	27	28	20	12	RCPTS LRNG STUDIO 15 2B12		0.8		3/4"	12
					SPACE ONLY			29	30			SPACE ONLY					
					SPACE ONLY			31	32			SPACE ONLY					
					SPACE ONLY			33	34			SPACE ONLY					
					SPACE ONLY			35	36			SPACE ONLY					
					SPACE ONLY			37	38			SPACE ONLY					
					SPACE ONLY			39	40			SPACE ONLY					
					SPACE ONLY			41	42			SPACE ONLY					
					SPACE ONLY			43	44			SPACE ONLY					
					SPACE ONLY			45	46			SPACE ONLY					
					SPACE ONLY			47	48			SPACE ONLY					
		1.0			SPARE		20	49	50	20		SPARE	1.0				
			1.0		SPARE		20	51	52	20		SPARE		1.0			
				1.0	SPARE		20	53	54	20		SPARE			1.0		
		4.2	2.8	3.0	SUB-TOTAL KVA							KVA SUB-TOTAL	2.4	3.4	2.8		
												KVA GROSS-TOTAL	6.6	6.2	5.8		18.6
												FED FROM: SDP3					

PANELBOARD AND WIRING SCHEDULE

PANELBOARD: **RP14** | VOLTAGE: 208Y/120 | AMPERES: 225 | MLO | 3PH/4W | AIC: 10,000

GND	CON	LOAD A	LOAD B	LOAD C	DESIGNATION	WIRE	BKR	CKT	CKT	BKR	WIRE	DESIGNATION	LOAD A	LOAD B	LOAD C	CON	GND
					SPACE ONLY			1	2	20	12	RCPTS MS ONE TO ONE 2 2B08	0.8			3/4"	12
12	3/4"		1.0		RCPTS MS GROUP LEARNING 2 2B0	12	20	3	4	20	12	RCPTS LEARNING STUDIO 16 2B10		0.4		3/4"	12
12	3/4"			0.4	RCPTS MS GROUP LEARNING 2 2B0	12	20	5	6			SPACE ONLY					
12	3/4"	0.8			RCPTS MS HUB 2 2B00	12	20	7	8	20	12	RCPTS LEARNING STUDIO 16 2B10	0.8			3/4"	12
					SPACE ONLY			9	10	20	12	RCPTS LEARNING STUDIO 16 2B10		0.2		3/4"	12
12	3/4"			0.8	RCPTS MS GROUP LEARNING 2 2B0	12	20	11	12	20	12	RCPTS LEARNING STUDIO 16 2B10			0.4	3/4"	12
12	3/4"	0.8			RCPTS MS GROUP LEARNING 2 2B0	12	20	13	14	20	12	RCPTS LEARNING STUDIO 16 2B10	0.4			3/4"	12
12	3/4"		0.2		RCPTS MS HUB 2 2B00	12	20	15	16	20	12	RCPTS LEARNING STUDIO 16 2B10		0.6		3/4"	12
12	3/4"			0.8	RCPTS MS HUB 2 2B00	12	20	17	18	20	12	RCPTS LEARNING STUDIO 16 2B10			0.6	3/4"	12
12	3/4"	0.4			RCPTS RM 2B00	12	20	19	20	20	12	RCPTS RM 2B05	0.4			3/4"	12
12	3/4"		0.8		MAINTENANCE RCPTS ROOF	10	20	21	22	15/2	12	EF-4		0.3		3/4"	12
12	3/4"			1.0	DDC PANEL MECH 2B05	12	20	23	24	20	12	RCPTS ROOM 2B01			0.4	3/4"	12
12	3/4"	0.8			RCPTS MS GROUP LEARNING 2 2B0	12	20	25	26	15/2	12	EF-5	0.3			3/4"	12
					SPACE ONLY			27	28			-		0.3			
					SPACE ONLY			29	30	15/2	12	EF-6			0.3	3/4"	12
					SPACE ONLY			31	32			-	0.3				
					SPACE ONLY			33	34	15/2	12	EF-3		0.3		3/4"	12
					SPACE ONLY			35	36			-			0.3		
					SPACE ONLY			37	38			SPACE ONLY					
					SPACE ONLY			39	40			SPACE ONLY					
					SPACE ONLY			41	42			SPACE ONLY					
					SPACE ONLY			43	44			SPACE ONLY					
					SPACE ONLY			45	46			SPACE ONLY					
					SPACE ONLY			47	48			SPACE ONLY					
		1.0			SPARE		20	49	50	20		SPARE	1.0				
			1.0		SPARE		20	51	52	20		SPARE		1.0			
				1.0	SPARE		20	53	54	20		SPARE			1.0		
		3.8	3.0	4.0	SUB-TOTAL KVA							KVA SUB-TOTAL	3.9	3.0	2.9		
												KVA GROSS-TOTAL	7.7	6.0	6.9		20.6
												FED FROM: SDP3					

SYM | DESCRIPTION | DATE | APPR

NAVFAC

SEAL: STATE OF KENTUCKY – BRADLEY WYNN REEVES – 20934 – LICENSED PROFESSIONAL ENGINEER

EWING COLE
Federal Reserve Bank Building
100 North 6th Street
Philadelphia, PA 19106-1590
Tel: 215-923-2020 Fax: 215-574-0952
A/E INFO

APPROVED

FOR COMMANDER NAVFAC

ACTIVITY

SATISFACTORY TO | DATE

BWR | KDM | BKB

PM/DM

BRANCH MANAGER

CHIEF ENG/ ARCH

FIRE PROTECTION

DEPARTMENT OF THE NAVY
NAVAL FACILITIES ENGINEERING COMMAND
NAVAL FACILITIES ENGINEERING COMMAND ~ WASHINGTON
DoDEA
MARINE CORPS BASE QUANTICO, VIRGINIA
MARINE CORPS BASE QUANTICO
QUANTICO, VA

REPLACE QUANTICO M/H SCHOOL

PANEL SCHEDULES

SCALE:
PROJECT NO.: P-021
CONSTR. CONTR. NO. W91236-15-C-0023
NAVFAC DRAWING NO. 13091416
SHEET 662 OF 789
E705

RTA SUBMISSION - 10/13/2016

DRAWFORM REVISION: 10 MARCH 2009

File Path

PANELBOARD AND WIRING SCHEDULE

PANELBOARD: **RP15** | VOLTAGE: 208Y/120 | AMPERES: 225 | MLO | 3PH/4W | AIC: 10,000

GND	CON	LOAD A	LOAD B	LOAD C	DESIGNATION	WIRE	BKR	CKT	CKT	BKR	WIRE	DESIGNATION	LOAD A	LOAD B	LOAD C	CON	GND
12	3/4"	0.8			RCPTS HS HUB 2 2D00	12	20	1	2	20	12	RCPTS LEARNING STUDIO 12 2D14	0.8			3/4"	12
					SPACE ONLY			3	4	20	12	RCPTS LEARNING STUDIO 12 2D14		0.4		3/4"	12
12	3/4"			0.8	RCPTS HS HUB 2 2D00	12	20	5	6	20	12	RCPTS LEARNING STUDIO 12 2D14			0.8	3/4"	12
12	3/4"	0.8			RCPTS HS HUB 2 2D00	12	20	7	8	20	12	RCPTS LEARNING STUDIO 12 2D14	0.2			3/4"	12
12	3/4"		0.4		RCPTS LEARNING STUDIO 11 2D12	12	20	9	10	20	12	RCPTS LEARNING STUDIO 12 2D14		0.4		3/4"	12
12	3/4"			0.6	RCPTS LEARNING STUDIO 11 2D12	12	20	11	12	20	12	RCPTS LEARNING STUDIO 2D16			0.2	3/4"	12
12	3/4"	0.4			RCPTS LEARNING STUDIO 11 2D12	12	20	13	14	20	12	RCPTS LEARNING STUDIO 12 2D14	0.4			3/4"	12
12	3/4"		0.2		RCPTS LEARNING STUDIO 11 2D12	12	20	15	16	20	12	RCPTS LEARNING STUDIO 3 2D16		1.0		3/4"	12
12	3/4"			0.4	RCPTS LEARNING STUDIO 11 2D12	12	20	17	18	20	12	RCPTS LEARNING STUDIO 3 2D16			0.4	3/4"	12
12	3/4"	0.2			RCPTS LEARNING STUDIO 11 2D12	12	20	19	20			SPACE ONLY					
12	3/4"		0.8		RCPTS LEARNING STUDIO 11 2D12	12	20	21	22	20	12	RCPTS LEARNING STUDIO 3 2D16		0.4		3/4"	12
12	3/4"			0.4	RCPTS HS SUPPORT 2 2D05	12	20	23	24	20	12	RCPTS LEARNING STUDIO 3 2D16			1.0	3/4"	12
12	3/4"	0.8			RCPTS HS SUPPORT 2 2D05	12	20	25	26	20	12	RCPTS LEARNING STUDIO 3 2D16	0.2			3/4"	12
12	3/4"		0.4		RCPTS HS SUPPORT 2 2D05	12	20	27	28	20	12	RCPTS LEARNING STUDIO 3 2D16		0.4		3/4"	12
					SPACE ONLY			29	30	20	12	RCPTS RM 2D09			0.4	3/4"	12
12	3/4"	0.8			RCPTS HS SUPPORT 2 2D05	12	20	31	32			SPACE ONLY					
12	3/4"		0.2		RCPTS HS SUPPORT 2 2D05	12	20	33	34			SPACE ONLY					
12	3/4'			0.8	RCPTS HS SUPPORT 2 2D05	12	20	35	36			SPACE ONLY					
					SPACE ONLY			37	38			SPACE ONLY					
					SPACE ONLY			39	40			SPACE ONLY					
					SPACE ONLY			41	42			SPACE ONLY					
					SPACE ONLY			43	44			SPACE ONLY					
					SPACE ONLY			45	46			SPACE ONLY					
					SPACE ONLY			47	48			SPACE ONLY					
		1.0			SPARE		20	49	50	20		SPARE	1.0				
			1.0		SPARE		20	51	52	20		SPARE		1.0			
				1.0	SPARE		20	53	54	20		SPARE			1.0		
		4.8	3.0	4.0	SUB-TOTAL KVA							KVA SUB-TOTAL	2.6	3.6	3.8		
												KVA GROSS-TOTAL	7.4	6.6	7.8		21.8
												FED FROM: SDP3					

PANELBOARD AND WIRING SCHEDULE

PANELBOARD: **RP16** | VOLTAGE: 208Y/120 | AMPERES: 225 | MLO | 3PH/4W | AIC: 10,000

GND	CON	LOAD A	LOAD B	LOAD C	DESIGNATION	WIRE	BKR	CKT	CKT	BKR	WIRE	DESIGNATION	LOAD A	LOAD B	LOAD C	CON	GND
12	3/4"	0.8			RCPTS HS GROUP LEARNING 1 2D06	12	20	1	2			SPACE ONLY					
12	3/4"		0.8		RCPTS HS GROUP LEARNING 1 2D06	12	20	3	4	20	12	RCPTS LEARNING STUDIO 10 2D10		1.0		3/4"	12
12	3/4"			0.8	RCPTS HS GROUP LEARNING 1 2D06	12	20	5	6	20	12	RCPTS LEARNING STUDIO 10 2D10			0.4	3/4"	12
12	3/4"	0.8			RCPTS HS GROUP LEARNING 1 2D06	12	20	7	8	20	12	RCPTS LEARNING STUDIO 10 2D10	0.8			3/4"	12
12	3/4"		1.0		RCPTS HS ONE TO ONE 2D04	12	20	9	10	20	12	RCPTS LEARNING STUDIO 10 2D10		0.4		3/4"	12
12	3/4"			0.2	RCPTS LI MODERATE 2D02	12	20	11	12	20	12	RCPTS LEARNING STUDIO 10 2D10			0.4	3/4"	12
12	3/4"	0.2			RCPTS LEARNING STUDIO 2D08	12	20	13	14			SPACE ONLY					
12	3/4"		0.4		RCPTS LEARNING STUDIO 2D08	12	20	15	16	20	12	RCPTS LEARNING STUDIO 10 2D10		0.2		3/4"	12
12	3/4"			0.8	RCPTS LEARNING STUDIO 2D08	12	20	17	18			SPACE ONLY					
12	3/4"	0.8			RCPTS LEARNING STUDIO 2D08	12	20	19	20			SPACE ONLY					
12	3/4"		0.4		RCPTS LEARNING STUDIO 2D08	12	20	21	22			SPACE ONLY					
12	3/4"			0.4	RCPTS LEARNING STUDIO 2D08	12	20	23	24			SPACE ONLY					
					SPACE ONLY		20	25	26			SPACE ONLY					
					SPACE ONLY			27	28			SPACE ONLY					
					SPACE ONLY			29	30			SPACE ONLY					
					SPACE ONLY			31	32			SPACE ONLY					
					SPACE ONLY			33	34			SPACE ONLY					
					SPACE ONLY			35	36			SPACE ONLY					
					SPACE ONLY			37	38			SPACE ONLY					
					SPACE ONLY			39	40			SPACE ONLY					
					SPACE ONLY			41	42			SPACE ONLY					
					SPACE ONLY			43	44			SPACE ONLY					
					SPACE ONLY			45	46			SPACE ONLY					
					SPACE ONLY			47	48			SPACE ONLY					
		1.0			SPARE		20	49	50	20		SPARE	1.0				
			1.0		SPARE		20	51	52	20		SPARE		1.0			
				1.0	SPARE		20	53	54	20		SPARE			1.0		
		3.6	3.6	3.2	SUB-TOTAL KVA							KVA SUB-TOTAL	1.8	2.6	1.8		
												KVA GROSS-TOTAL	5.4	6.2	5.0		16.6
												FED FROM: SDP3					

PANELBOARD AND WIRING SCHEDULE

PANELBOARD: **RP17** | VOLTAGE: 208Y/120 | AMPERES: 225 | MCB | 3PH/4W | AIC: 10,000

GND	CON	LOAD A	LOAD B	LOAD C	DESIGNATION	WIRE	BKR	CKT	CKT	BKR	WIRE	DESIGNATION	LOAD A	LOAD B	LOAD C	CON	GND
12	3/4"	1.2			RCPTS RM 2B06	12	20	1	2	20	12	RCPTS RM 2D01	0.8			3/4"	12
12	3/4"		0.6		RCPTS RM 2B06	12	20	3	4	20	12	RCPTS RM 2D01		0.8		3/4"	12
12	3/4"			1.0	RCPTS RM 2B04	12	20	5	6	20	12	RCPTS RM 2D07			1.0	3/4"	12
12	3/4"	0.6			REC RM 2B04,2B08	12	20	7	8	20	12	RCPTS RM 2D07	0.6			3/4"	12
12	3/4"		0.4		RCPTS RM 2B04	12	20	9	10	20	12	RCPTS RM 2D07		0.4		3/4"	12
12	3/4"			0.8	RCPTS RM 2B04	12	20	11	12	20	12	RCPTS RM 2D07			0.8	3/4"	12
					SPACE ONLY			13	14	20	12	RCPTS RM 2D07	0.6			3/4"	12
12	3/4"		0.8		RCPTS RM 2B04	12	20	15	16	20	12	RCPTS RM 2B01		0.8		3/4"	12
12	3/4"			0.8	RCPTS RM 2B04	12	20	17	18	20	12	RCPTS RM 2B01			0.8	3/4"	12
12	3/4"	1.0			RCPTS RM 2B04	12	20	19	20	20	12	RCPTS RM 2B01	0.2			3/4"	12
12	3/4"		0.4		RCPTS RM 2B02	12	20	21	22	20	12	RCPTS RM 2B01		0.4		3/4"	12
12	3/4"			0.4	RCPTS RM 2B02	12	20	23	24	20	12	RCPTS RM 2B01			0.6	3/4"	12
12	3/4"	0.8			RCPTS RM 2B02	12	20	25	26	20	12	RCPTS RM 2B03	0.8			3/4"	12
12	3/4"		0.4		RCPTS RM 2E01	12	20	27	28	20	12	RCPTS RM 2B03		0.8		3/4"	12
12	3/4"			0.8	RCPTS RM 2B02	12	20	29	30	20	12	RCPTS RM 2B06			1.0	3/4"	12
12	3/4"	0.4			RCPTS RM 2B02	12	20	31	32	20	12	RCPTS RM 2B03	0.4			3/4"	12
12	3/4"		0.8		RCPTS RM 2B02	12	20	33	34	20	12	RCPTS RM 2B03		1.0		3/4"	12
12	3/4"			1.0	RCPTS FREEZER RM 2B06	12	20	35	36	20	12	RCPTS RM 2B05			0.6	3/4"	12
12	3/4"	1.0			RCPTS DISHWASHER RM 2B06	12	20	37	38	20	12	RCPTS RM 2B05	0.8			3/4"	12
12	3/4"		0.4		PRINTER 2E05	12	20/2	39	40	20	12	RCPTS RM 2B05		1.0		3/4"	12
				0.4				41	42	20	12	RCPTS RM 2E04 DISHWASHER			1.0	3/4"	12
12	3/4"	0.8			RCPTS RM 2E04	12	20	43	44	20	12	RCPTS RM 2E04 COFFEE MAKER	1.0			3/4"	12
12	3/4"		0.8		RCPTS RM 2E04	12	20	45	46	20	12	RCPTS RM 2E04		1.0		3/4"	12
					SPACE ONLY			47	48	20	12	RCPTS RM 2E04 - REF			1.0	3/4"	12
		1.0			SPARE		20	49	50	20		SPARE	1.0				
			1.0		SPARE		20	51	52	20		SPARE		1.0			
				1.0	SPARE		20	53	54	20		SPARE			1.0		
		6.8	5.6	6.2	SUB-TOTAL KVA							KVA SUB-TOTAL	6.2	7.2	7.8		
												KVA GROSS-TOTAL	13.0	12.8	14.0		39.8
												FED FROM: SDP3					

PANELBOARD AND WIRING SCHEDULE

PANELBOARD: **RP17A** | VOLTAGE: 208Y/120 | AMPERES: 225 | MCB | 3PH/4W | AIC: 10,000

GND	CON	LOAD A	LOAD B	LOAD C	DESIGNATION	WIRE	BKR	CKT	CKT	BKR	WIRE	DESIGNATION	LOAD A	LOAD B	LOAD C	CON	GND
12	3/4"	0.6			RCPTS RM 2E01	12	20	1	2	20	12	RCPTS RM 2D02.3	0.8			3/4"	12
12	3/4"		1.0		RCPTS RM 2E01 - FLOOR BOX	12	20	3	4	20	12	RCPTS RM 2D02.3		1.0		3/4"	12
12	3/4"			1.0	RCPTS RM 2E01 - FLOOR BOX	12	20	5	6	20	12	RCPTS EXTERIOR			0.8	3/4"	12
12	3/4"	1.0			RCPTS RM 2E01 - FLOOR BOX	12	20	7	8	20	12	RCPTS RM 2D02 - WASHER	1.0			3/4"	12
12	3/4"		1.0		RCPTS RM 2E01 - FLOOR BOX	12	20	9	10	20	12	RCPTS RM 2D02		1.0		3/4"	12
12	3/4"			1.0	RCPTS RM 2E01 - FLOOR BOX	12	20	11	12	20	12	RCPTS RM 2D02			0.8	3/4"	12
12	3/4"	1.0			RCPTS RM 2E01 - FLOOR BOX	12	20	13	14	20	12	RCPTS RM 2D02	0.4			3/4"	12
12	3/4"		1.0		RCPTS RM 2E01 - FLOOR BOX	12	20	15	16	20	12	RCPTS RM 2D02 - MICROWAVE		1.0		3/4"	12
12	3/4"			1.0	RCPTS RM 2E01 - FLOOR BOX	12	20	17	18	20	12	RCPTS RM 2D02 - REF			1.0	3/4"	12
12	3/4"	0.4			RCPTS RM 2E01	12	20	19	20	20	12	RCPTS RM 2D02	0.8			3/4"	12
12	3/4"		0.8		RCPTS RM 2E01	12	20	21	22	20	12	RCPTS RM 2D02		0.4		3/4"	12
12	3/4"			0.8	RCPTS RM 2C14	12	20	23	24	30/2	10	RCPTS RM 2D02 = DRYER			2.5	3/4"	10
12	3/4"	0.4			RCPTS RM 2C14	12	20	25	26			-	2.5				
12	3/4"		0.8		RCPTS RM 2C14	12	20	27	28	50/2	8	RM 2D02 - RANGE		4.2		1"	8
12	3/4"			1.0	RCPTS RM 2D02	12	20	29	30			-			4.2		
12	3/4"	1.0			DOOR PWR SUPPLY RM 2E06/07	12	20	31	32	20	12	DOOR PWR SUPPLY RM 2C18	0.5			3/4"	12
12	3/4"		0.4		RCPTS RM 2E07	12	20	33	34	20	12	RCPTS RM 2C18		0.4		3/4"	12
12	3/4"			0.5	DOOR PWR SUPPLY 2E01	12	20	35	36	15	12	TP-3			0.4	3/4"	12
12	3/4"	0.8			RCPTS RM 2E01			37	38	20	12	RCPTS RM 2D02	1.0			3/4"	12
12	3/4"		0.4		RCPTS RM 2E01			39	40	20	12	RCPTS RM 2D02		1.0		3/4"	12
12	3/4"			0.4	RCPTS RM 2E01			41	42	20	12	RCPTS RM 2D01			0.8	3/4"	12
12	3/4"	0.6			RCPTS RM 2E01			43	44	20	12	RCPTS RM 2D01	0.8				
12	3/4"		0.6		RCPTS RM 2E01			45	46			SPACE ONLY					
12	3/4"			1.0	RCPTS RM 2E01			47	48			SPACE ONLY					
		1.0			SPARE		20	49	50	20		SPARE	1.0				
			1.0		SPARE		20	51	52	20		SPARE		1.0			
				1.0	SPARE		20	53	54	20		SPARE			1.0		
		6.8	7.0	7.7	SUB-TOTAL KVA							KVA SUB-TOTAL	8.8	10.0	11.5		
												KVA GROSS-TOTAL	15.6	17.0	19.2		51.7
												FED FROM: SDP3					

SYM | DESCRIPTION | DATE | APPR

STATE OF KENTUCKY
BRADLEY WYNN REEVES
20834
LICENSED
PROFESSIONAL ENGINEER

SEAL

EWING COLE
Federal Reserve Bank Building
100 North 6th Street
Philadelphia, PA 19106-1590
Tel: 215-923-2020 Fax: 215-574-0952

A/E INFO

APPROVED

FOR COMMANDER NAVFAC

ACTIVITY

SATISFACTORY TO | DATE

BWR | KDM | BKB

PM/DM

BRANCH MANAGER

CHIEF ENG/ ARCH

FIRE PROTECTION

DEPARTMENT OF THE NAVY
NAVAL FACILITES ENGINEERING COMMAND
NAVAL FACILITIES ENGINEERING COMMAND ~ WASHINGTON
MARINE CORPS BASE QUANTICO, VIRGINIA
DoDEA
MARINE CORPS BASE QUANTICO
QUANTICO, VA

REPLACE QUANTICO M/H SCHOOL

PANEL SCHEDULES

SCALE:

PROJECT NO.: P-021

CONSTR. CONTR. NO. W91236-15-C-0023

NAVFAC DRAWING NO. 13091417

SHEET 663 OF 789

E706

RTA SUBMISSION - 10/13/2016

DRAWFORM REVISION: 10 MARCH 2009

File Path

PANELBOARD AND WIRING SCHEDULE

PANELBOARD: **RP18** VOLTAGE: 208Y/120 AMPERES: 150 MLO 3PH/4W AIC: 10,000

GND	CON	LOAD A	LOAD B	LOAD C	DESIGNATION	WIRE	BKR	CKT	CKT	BKR	WIRE	DESIGNATION	LOAD A	LOAD B	LOAD C	CON	GND
12	3/4"	1.2			RCPTS RM 2C07	12	20	1	2	20		SPARE	1.0				
12	3/4"		0.6		RCPTS RM 2C08	12	20	3	4	20	12	RCPTS RM 2C01		0.8		3/4"	12
12	3/4"			1.0	DOOR POWER TR5, 2C08	12	20	5	6	20	12	RCPTS RM 2C01			0.8	3/4"	12
12	3/4"	0.8			RCPTS RM 2C05	12	20	7	8	20	12	RCPTS RM 2C01	0.8			3/4"	12
12	3/4"		0.8		RCPTS RM 2C05, 2C01	12	20	9	10	20	12	RCPTS RM 2C01		1.0		3/4"	12
12	3/4"			0.8	RCPTS RM 2C05, 2C04	12	20	11	12	20	12	RCPTS RM 2C01			0.8	3/4"	12
12	3/4"	0.8			RCPTS RM 2C04	12	20	13	14	20	12	RCPTS RM 2C09	0.8			3/4"	12
12	3/4"		0.8		RCPTS RM 2C04	12	20	15	16	20	12	RCPTS RM 2C09		0.8		3/4"	12
12	3/4"			1.0	SPARE	12	20	17	18	20	12	RCPTS RM 2C09			0.4	3/4"	12
12	3/4"	0.6			RCPTS RM 2C04, 2C03	12	20	19	20	20	12	RCPTS RM 2C09	0.8			3/4"	12
12	3/4"		1.0		RCPTS RM 2C03 - REF	12	20	21	22	20	12	RCPTS RM 2C09		0.8		3/4"	12
12	3/4"			1.0	RCPTS RM 2C03 - MICROWAVE	12	20	23	24	20	12	RCPTS RM 2C09			0.6	3/4"	12
12	3/4"	1.0			RCPTS RM 2C03 - COFFEE	12	20	25	26	20	12	RCPTS RM 2C09	0.6			3/4"	12
12	3/4"		1.0		RCPTS RM 2C03 - COW	12	20	27	28	20	12	RCPTS RM 2C01		0.4		3/4"	12
12	3/4"			0.8	RCPTS RM 2C03	12	20	29	30	20	12	RCPTS RM 2C01			0.4	3/4"	12
12	3/4"	0.6			RCPTS RM 2C01	12	20	31	32	20	12	RCPTS RM 2C09	0.4			3/4"	12
12	3/4"		0.8		RCPTS RM 2C03	12	20	33	34	20	12	RCPTS RM 2C09		0.4		3/4"	12
12	3/4"			0.8	RCPTS RM 2C03	12	20	35	36	20	12	RCPTS RM 2C09			1.0	3/4"	12
12	3/4"	0.4			RCPTS RM 2C03	12	20	37	38	20	12	RCPTS RM 2C10	0.8			3/4"	12
12	3/4"		0.8		RCPTS RM 2C03	12	20	39	40	20	12	RCPTS RM 2C11		0.8		3/4"	12
12	3/4"			1.0	RCPTS RM 2C03	12	20	41	42	*20	12	WATER FOUNTAIN			1.0	3/4"	12
12	3/4"	0.4			RCPTS RM 2C03	12	20	43	44	20	12	RCPTS RM 2C15	0.4			3/4"	12
12	3/4"		0.4		RCPTS RM 2C03	12	20	45	46	20	12	RCPTS RM 2C12		0.8		3/4"	12
12	3/4"			0.4	RCPTS RM 2C03	12	20	47	48	*20	12	WATER FOUNTAIN			1.0	3/4"	12
12	3/4"	0.4			RCPTS RM 2C05, 2C01	12	20	49	50	20	12	DDC CONTROL PANEL	1.0			3/4"	12
			1.0		SPARE		20	51	52	20		SPARE		1.0			
				1.0	SPARE		20	53	54	20		SPARE			1.0		
		6.2	7.2	7.8	SUB-TOTAL KVA							KVA SUB-TOTAL	6.6	6.8	7.0		
												KVA GROSS-TOTAL	12.8	14.0	14.8		41.6

* GFI BREAKER

PANELBOARD AND WIRING SCHEDULE

PANELBOARD: **LP1** VOLTAGE: 480Y/277 AMPERES: 100 MLO 3PH/4W AIC: 10,000

GND	CON	LOAD A	LOAD B	LOAD C	DESIGNATION	WIRE	BKR	CKT	CKT	BKR	WIRE	DESIGNATION	LOAD A	LOAD B	LOAD C	CON	GND
12	3/4"	2.2			LTG RM 1C30	12	20	1	2	20	12	LTG RM 1C19	0.2			3/4"	12
12	3/4"		1.5		LTG RM 1C27	12	20	3	4	20	12	LTG RM 1C11		1.7		3/4"	12
12	3/4"			1.6	LTG RM 1C17	12	20	5	6	20	12	LTG RM 1C10			1.5	3/4"	12
12	3/4"	1.8			LTG RM 1C18	12	20	7	8	20	10	LTG SITE	1.0			1"	10
10	1"		0.2		LTG SITE	10	20	9	10	20	10	LTG SITE		1.0		1"	10
10	3/4"			0.2	LTG SITE	10	20	11	12			SPACE ONLY					
					SPACE ONLY			13	14			SPACE ONLY					
					SPACE ONLY			15	16			SPACE ONLY					
					SPACE ONLY			17	18			SPACE ONLY					
					SPACE ONLY			19	20			SPACE ONLY					
					SPACE ONLY			21	22			SPACE ONLY					
					SPACE ONLY			23	24			SPACE ONLY					
		1.0			SPARE		20	25	26	20		SPARE	1.0				
			1.0		SPARE		20	27	28	20		SPARE		1.0			
				1.0	SPARE		20	29	30	20		SPARE			1.0		
		5.0	2.7	2.8	SUB-TOTAL KVA							KVA SUB-TOTAL	2.2	3.7	2.5		
												KVA GROSS-TOTAL	7.2	6.4	5.3		18.9

PANELBOARD AND WIRING SCHEDULE

PANELBOARD: **LP2** VOLTAGE: 480Y/277 AMPERES: 100 MLO 3PH/4W AIC: 10,000

GND	CON	LOAD A	LOAD B	LOAD C	DESIGNATION	WIRE	BKR	CKT	CKT	BKR	WIRE	DESIGNATION	LOAD A	LOAD B	LOAD C	CON	GND
12	3/4"	1.4			LTG RM 1C03	12	20	1	2	20	12	LTG RM 1C03	1.4			3/4"	12
12	3/4"		1.4		LTG RM 1C03	12	20	3	4	20	12	LTG RM 1C03		1.4		3/4"	12
12	3/4"			1.4	LTG RM 1C03	12	20	5	6	20	12	LTG RM 1C03			1.0	3/4"	12
12	3/4"	0.9			LTG RM 1A16	12	20	7	8	20	12	LTG RM 1A01	0.7			3/4"	12
10	3/4"		0.1		LTG BLDG MTD	10	20	9	10	20	10	LTG BLDG MTD		0.6		3/4"	10
					SPACE ONLY			11	12			SPACE ONLY					
					SPACE ONLY			13	14			SPACE ONLY					
					SPACE ONLY			15	16			SPACE ONLY					
					SPACE ONLY			17	18			SPACE ONLY					
					SPACE ONLY			19	20			SPACE ONLY					
					SPACE ONLY			21	22			SPACE ONLY					
					SPACE ONLY			23	24			SPACE ONLY					
		1.0			SPARE		20	25	26	20		SPARE	1.0				
			1.0		SPARE		20	27	28	20		SPARE		1.0			
				1.0	SPARE		20	29	30	20		SPARE			1.0		
		3.3	2.5	2.4	SUB-TOTAL KVA							KVA SUB-TOTAL	3.1	3.0	2.0		
												KVA GROSS-TOTAL	6.4	5.5	4.4		16.3
												FED FROM	MDP				

PANELBOARD AND WIRING SCHEDULE

PANELBOARD: **LP3** VOLTAGE: 480Y/277 AMPERES: 100 MLO 3PH/4W AIC: 10,000

GND	CON	LOAD A	LOAD B	LOAD C	DESIGNATION	WIRE	BKR	CKT	CKT	BKR	WIRE	DESIGNATION	LOAD A	LOAD B	LOAD C	CON	GND
12	3/4"	1.0			LTG RM 1C01	12	20	1	2	20	12	LTG RM 1A18	1.0			3/4"	12
12	3/4"		1.0		LTG RM 1A27	12	20	3	4	20	12	LTG RM 1C41		1.0		3/4"	12
10	3/4"			1.0	LTG RM BLDG MTD	10	20	5	6	20	12	LTG RM 1C44			1.0	3/4"	12
12	3/4"	1.0			LTG RM 1C49	12	20	7	8	20	12	LTG RM 1S02	1.0			3/4"	12
12	3/4"		1.0		LTG RM 1A22	12	20	9	10	20	12	LTG RM 1S02		1.0		3/4"	12
12	3/4"			1.0	LTG RM 1C52	12	20	11	12	20	12	THEATRICAL LTG CONTROLS			0.4	3/4"	12
10	3/4"	0.8			SITE LTG	10	20	13	14			SPACE ONLY					
10	3/4"		0.8		SITE LTG	10	20	15	16			SPACE ONLY					
10	3/4"			0.8	SITE LTG	10	20	17	18			SPACE ONLY					
10	3/4"	0.8			SITE LTG	10	20	19	20			SPACE ONLY					
10	3/4"		0.2		SITE LTG	10	20	21	22			SPACE ONLY					
10	3/4"			0.2	SITE LTG	10	20	23	24			SPACE ONLY					
		1.0			SPARE		20	25	26	20		SPARE	1.0				
			1.0		SPARE		20	27	28	20		SPARE		1.0			
				1.0	SPARE		20	29	30	20		SPARE			1.0		
		4.5	4.0	4.0	SUB-TOTAL KVA							KVA SUB-TOTAL	3.0	3.0	2.4		
												KVA GROSS-TOTAL	7.6	7.0	6.4		21.0
												FED FROM	MDP				

STM	DESCRIPTION	DATE	APPR.

NAVFAC

STATE OF KENTUCKY · BRADLEY ALAN REEVES · 20 · PROFESSIONAL ENGINEER

SEAL

EWING COLE
Federal Reserve Bank Building
100 North 6th Street
Philadelphia, PA 19106-1590
Tel: 215-923-2020 Fax: 215-574-0952

A/E INFO

APPROVED

FOR COMMANDER NAVFAC ACTIVITY

SATISFACTORY TO DATE

BWR KDM BKB

PM/DM

BRANCH MANAGER

CHIEF ENG/ ARCH

FIRE PROTECTION

DEPARTMENT OF THE NAVY
NAVAL FACILITIES ENGINEERING COMMAND
DoDEA
NAVAL FACILITIES ENGINEERING COMMAND ~ WASHINGTON
MARINE CORPS BASE QUANTICO, VIRGINIA
MARINE CORPS BASE QUANTICO
QUANTICO, VA

REPLACE QUANTICO M/H SCHOOL

PANEL SCHEDULES

SCALE:

PROJECT NO.: P-021

CONSTR. CONTR. NO. W91236-15-C-0023

NAVFAC DRAWING NO. 13091418

SHEET 664 OF 789

E707

DRAWFORM REVISION: 10 MARCH 2009

RTA SUBMISSION - 10/13/2016

File Path

PANELBOARD AND WIRING SCHEDULE

PANELBOARD: **LP4** VOLTAGE: 480Y/277 AMPERES: 100 MLO 3PH/4W AIC: 10,000

GND	CON	LOAD A	LOAD B	LOAD C	DESIGNATION	WIRE	BKR	CKT	CKT	BKR	WIRE	DESIGNATION	LOAD A	LOAD B	LOAD C	CON	GND
12	3/4"	0.3			LTG BLDG MTD	12	20	1	2	20	12	LTG RM 1B10	1.4			3/4"	12
12	3/4"		1.6		LTG RM 1B12	12	20	3	4	20	12	LTG RM 1B00		2.2		3/4"	12
12	3/4"			1.0	LTG RM 1D18	12	20	5	6	20	12	LTG RM 1S03			1.0	3/4"	12
					SPACE ONLY			7	8			SPACE ONLY					
					SPACE ONLY			9	10			SPACE ONLY					
					SPACE ONLY			11	12			SPACE ONLY					
					SPACE ONLY			13	14			SPACE ONLY					
					SPACE ONLY			15	16			SPACE ONLY					
					SPACE ONLY			17	18			SPACE ONLY					
					SPACE ONLY			19	20			SPACE ONLY					
					SPACE ONLY			21	22			SPACE ONLY					
					SPACE ONLY			23	24			SPACE ONLY					
		1.0			SPARE		20	25	26	20		SPARE	1.0				
			1.0		SPARE		20	27	28	20		SPARE		1.0			
				1.0	SPARE		20	29	30	20		SPARE			1.0		
		1.3	2.6	2.0	**SUB-TOTAL**	KVA						KVA **SUB-TOTAL**	2.4	3.2	2.0		
												KVA **GROSS-TOTAL**	3.7	5.8	4.0		
												FED FROM	MDP				

13.5

PANELBOARD AND WIRING SCHEDULE

PANELBOARD: **LP5** VOLTAGE: 480Y/277 AMPERES: 100 MLO 3PH/4W AIC: 10,000

GND	CON	LOAD A	LOAD B	LOAD C	DESIGNATION	WIRE	BKR	CKT	CKT	BKR	WIRE	DESIGNATION	LOAD A	LOAD B	LOAD C	CON	GND
12	3/4"	1.0			LTG RM 1B02	12	20	1	2	20	12	LTG RM 1ED1	1.0			3/4"	12
12	3/4"		1.0		LTG RM 1D04	12	20	3	4	20	12	LTG RM 1D06		1.0		3/4"	12
10	3/4"			1.0	LTG RM BLDG MTD	10	20	5	6	20	12	LTG RM 1D07			1.0	3/4"	12
12	3/4"	1.0			LTG RM 1ED6	12	20	7	8			SPACE ONLY					
					SPACE ONLY			9	10			SPACE ONLY					
					SPACE ONLY			11	12			SPACE ONLY					
					SPACE ONLY			13	14			SPACE ONLY					
					SPACE ONLY			15	16			SPACE ONLY					
					SPACE ONLY			17	18			SPACE ONLY					
					SPACE ONLY			19	20			SPACE ONLY					
					SPACE ONLY			21	22			SPACE ONLY					
					SPACE ONLY			23	24			SPACE ONLY					
		1.0			SPARE		20	25	26	20		SPARE	1.0				
			1.0		SPARE		20	27	28	20		SPARE		1.0			
				1.0	SPARE		20	29	30	20		SPARE			1.0		
		3.0	2.0	2.0	**SUB-TOTAL**	KVA						KVA **SUB-TOTAL**	2.0	2.0	2.0		
												KVA **GROSS-TOTAL**	5.0	4.0	4.0		
												FED FROM	MDP				

13.0

PANELBOARD AND WIRING SCHEDULE

PANELBOARD: **LP6** VOLTAGE: 480Y/277 AMPERES: 100 MLO 3PH/4W AIC: 10,000

GND	CON	LOAD A	LOAD B	LOAD C	DESIGNATION	WIRE	BKR	CKT	CKT	BKR	WIRE	DESIGNATION	LOAD A	LOAD B	LOAD C	CON	GND
12	3/4"	1.4			LTG RM 1D10	12	20	1	2	20	12	LTG RM 1D00	2.0			3/4"	12
12	3/4"		1.6		LTG RM 1D14	12	20	3	4	20	12	LTG RM 1D12		1.0		3/4"	12
12	3/4"			1.0	LTG RM 1S04	12	20	5	6	20	10	LTG BLDG EXT			1.0	3/4"	10
					SPACE ONLY			7	8			SPACE ONLY					
					SPACE ONLY			9	10			SPACE ONLY					
					SPACE ONLY			11	12			SPACE ONLY					
					SPACE ONLY			13	14			SPACE ONLY					
					SPACE ONLY			15	16			SPACE ONLY					
					SPACE ONLY			17	18			SPACE ONLY					
					SPACE ONLY			19	20			SPACE ONLY					
					SPACE ONLY			21	22			SPACE ONLY					
					SPACE ONLY			23	24			SPACE ONLY					
		1.0			SPARE		20	25	26	20		SPARE	1.0				
			1.0		SPARE		20	27	28	20		SPARE		1.0			
				1.0	SPARE		20	29	30	20		SPARE			1.0		
		2.4	2.6	2.0	**SUB-TOTAL**	KVA						KVA **SUB-TOTAL**	3.0	2.0	2.0		
												KVA **GROSS-TOTAL**	5.4	4.6	4.0		
												FED FROM	MDP				

14.0

PANELBOARD AND WIRING SCHEDULE

PANELBOARD: **LP7** VOLTAGE: 480Y/277 AMPERES: 100 MLO 3PH/4W AIC: 10,000

GND	CON	LOAD A	LOAD B	LOAD C	DESIGNATION	WIRE	BKR	CKT	CKT	BKR	WIRE	DESIGNATION	LOAD A	LOAD B	LOAD C	CON	GND
12	3/4"	0.2			LTG RM 2C07	12	20	1	2	20	12	LTG RM 2C05	0.9			3/4"	12
12	3/4"		1.7		LTG RM 2C00	12	20	3	4	20	12	LTG RM 2C09		1.0		3/4"	12
12	3/4"			1.1	LTG RM 2C15	12	20	5	6	20	12	LTG RM 2C16			0.3	3/4"	12
12	3/4"	0.7			LTG RM 2C04	12	20	7	8			SPACE ONLY					
					SPACE ONLY			9	10			SPACE ONLY					
					SPACE ONLY			11	12			SPACE ONLY					
					SPACE ONLY			13	14			SPACE ONLY					
					SPACE ONLY			15	16			SPACE ONLY					
					SPACE ONLY			17	18			SPACE ONLY					
					SPACE ONLY			19	20			SPACE ONLY					
					SPACE ONLY			21	22			SPACE ONLY					
					SPACE ONLY			23	24			SPACE ONLY					
		1.0			SPARE		20	25	26	20		SPARE	1.0				
			1.0		SPARE		20	27	28	20		SPARE		1.0			
				1.0	SPARE		20	29	30	20		SPARE			1.0		
		1.9	2.7	2.1	**SUB-TOTAL**	KVA						KVA **SUB-TOTAL**	1.9	2.0	1.3		
												KVA **GROSS-TOTAL**	3.8	4.7	3.4		

11.9

STM	DESCRIPTION	DATE	APPR.

NAVFAC

STATE OF KENTUCKY · BRADLEY ALAN REEVES · 2-26-2010 · PROFESSIONAL ENGINEER

SEAL

EWING COLE
Federal Reserve Bank Building
100 North 6th Street
Philadelphia, PA 19106-1590
Tel: 215-923-2020 Fax: 215-574-0952

A/E INFO

APPROVED

FOR COMMANDER NAVFAC
ACTIVITY

SATISFACTORY TO DATE

BWR KDM BKB

PM/DM

BRANCH MANAGER

CHIEF ENG/ ARCH

FIRE PROTECTION

DEPARTMENT OF THE NAVY
NAVAL FACILITIES ENGINEERING COMMAND
DoDEA
NAVAL FACILITIES ENGINEERING COMMAND ~ WASHINGTON
MARINE CORPS BASE QUANTICO, VIRGINIA
MARINE CORPS BASE QUANTICO
QUANTICO, VA

REPLACE QUANTICO M/H SCHOOL

PANEL SCHEDULES

SCALE:

PROJECT NO.: P-021

CONSTR. CONTR. NO. W91236-15-C-0023

NAVFAC DRAWING NO. 13091419

SHEET 665 OF 789

E708

DRAWFORM REVISION: 10 MARCH 2009

RTA SUBMISSION - 10/13/2016

File Path

1	2	3	4	5

PANELBOARD AND WIRING SCHEDULE

PANELBOARD: **LP9** VOLTAGE: 480Y/277 AMPERES: 100 MLO 3PH/4W AIC: 10,000

GND	CON	LOAD A	LOAD B	LOAD C	DESIGNATION	WIRE	BKR	CKT	CKT	BKR	WIRE	DESIGNATION	LOAD A	LOAD B	LOAD C	CON	GND
12	3/4"	1.6			LTG RM 2D08	12	20	1	2	20	12	LTG RM 2D00	1.8			3/4"	12
12	3/4"		1.5		LTG RM 2D12	12	20	3	4	20	12	LTG RM 2D16		1.1		3/4"	12
					SPACE ONLY			5	6			SPACE ONLY					
					SPACE ONLY			7	8			SPACE ONLY					
					SPACE ONLY			9	10			SPACE ONLY					
					SPACE ONLY			11	12			SPACE ONLY					
					SPACE ONLY			13	14			SPACE ONLY					
					SPACE ONLY			15	16			SPACE ONLY					
					SPACE ONLY			17	18			SPACE ONLY					
					SPACE ONLY			19	20			SPACE ONLY					
					SPACE ONLY			21	22			SPACE ONLY					
					SPACE ONLY			23	24			SPACE ONLY					
		1.0			SPARE		20	25	26	20		SPARE	1.0				
			1.0		SPARE		20	27	28	20		SPARE		1.0			
				1.0	SPARE		20	29	30	20		SPARE			1.0		
		2.6	2.5	1.0	SUB-TOTAL KVA							KVA SUB-TOTAL	2.8	2.1	1.0		
												KVA GROSS-TOTAL	5.4	4.6	2.0		12.0
												FED FROM: MDP					

PANELBOARD AND WIRING SCHEDULE

PANELBOARD: **LP8** VOLTAGE: 480Y/277 AMPERES: 100 MLO 3PH/4W AIC: 10,000

GND	CON	LOAD A	LOAD B	LOAD C	DESIGNATION	WIRE	BKR	CKT	CKT	BKR	WIRE	DESIGNATION	LOAD A	LOAD B	LOAD C	CON	GND
12	3/4"	1.0			LTG RM 2D18	12	20	1	2	20	12	LTG RM 2D16	1.5			3/4"	12
12	3/4"		2.1		LTG RM 2B00	12	20	3	4	20	12	LTG RM 2B10		1.5		3/4"	12
					SPACE ONLY			5	6			SPACE ONLY					
					SPACE ONLY			7	8			SPACE ONLY					
					SPACE ONLY			9	10			SPACE ONLY					
					SPACE ONLY			11	12			SPACE ONLY					
					SPACE ONLY			13	14			SPACE ONLY					
					SPACE ONLY			15	16			SPACE ONLY					
					SPACE ONLY			17	18			SPACE ONLY					
					SPACE ONLY			19	20			SPACE ONLY					
					SPACE ONLY			21	22			SPACE ONLY					
					SPACE ONLY			23	24			SPACE ONLY					
		1.0			SPARE		20	25	26	20		SPARE	1.0				
			1.0		SPARE		20	27	28	20		SPARE		1.0			
				1.0	SPARE		20	29	30	20		SPARE			1.0		
		2.0	3.1	1.0	SUB-TOTAL KVA							KVA SUB-TOTAL	2.5	2.5	1.0		
												KVA GROSS-TOTAL	4.5	5.6	2.0		12.1
												FED FROM: MDP					

PANELBOARD AND WIRING SCHEDULE

PANELBOARD: **LP10** VOLTAGE: 480Y/277 AMPERES: 100 MLO 3PH/4W AIC: 10,000

GND	CON	LOAD A	LOAD B	LOAD C	DESIGNATION	WIRE	BKR	CKT	CKT	BKR	WIRE	DESIGNATION	LOAD A	LOAD B	LOAD C	CON	GND
12	3/4"	1.3			LTG RM 2D02	12	20	1	2	20	12	LTG RM 2D01	0.8			3/4"	12
12	3/4"		1.4		LTG RM 2D03	12	20	3	4	20	12	LTG RM 2E00		1.9		3/4"	12
12	3/4"			2.5	LTG RM CANYON	12	20	5	6	20	12	LTG RM CANYON			1.9	3/4"	12
12	3/4"	1.0			LTG RM CANYON	12	20	7	8	20	12	LTG RM 2B04	1.0			3/4"	12
12	3/4"		1.4		LTG RM CANYON	12	20	9	10	20	12	LTG RM CANYON		2.5		3/4"	12
12	3/4"			1.0	LTG RM CANYON	12	20	11	12	20	12	LTG RM CANYON			2.0	3/4"	12
12	3/4"	1.0			LTG RM CANYON	12	20	13	14			SPACE ONLY					
12	3/4"		1.0		LTG RM CANYON	12	20	15	16			SPACE ONLY					
12	3/4"			1.0	LTG RM CANYON	12	20	17	18			SPACE ONLY					
12	3/4"	1.0			LTG RM CANYON	12	20	19	20			SPACE ONLY					
					SPACE ONLY			21	22			SPACE ONLY					
					SPACE ONLY			23	24			SPACE ONLY					
		1.0			SPARE		20	25	26	20		SPARE	1.0				
			1.0		SPARE		20	27	28	20		SPARE		1.0			
				1.0	SPARE		20	29	30	20		SPARE			1.0		
		5.3	4.8	5.5	SUB-TOTAL KVA							KVA SUB-TOTAL	2.8	5.4	4.9		
												KVA GROSS-TOTAL	8.1	10.2	10.4		28.7
												FED FROM: MDP					

PANELBOARD AND WIRING SCHEDULE

PANELBOARD: **FR1** VOLTAGE: 208Y/120 AMPERES: 225 MLO 3PH/4W AIC: 10,000

GND	CON	LOAD A	LOAD B	LOAD C	DESIGNATION	WIRE	BKR	CKT	CKT	BKR	WIRE	DESIGNATION	LOAD A	LOAD B	LOAD C	CON	GND
12	3/4"	1.0			RCPTS CONCESSION	12	20	1	2	20	12	RCPTS EXT	1.0			3/4"	12
12	3/4"		1.0		RCPTS CONCESSION	12	20	3	4	20	12	RCPTS EXT		1.0		3/4"	12
12	3/4"			1.0	RCPTS CONCESSION	12	20	5	6	20	12	RCPTS EXT			1.0	3/4"	12
12	3/4"	1.0			RCPTS CONCESSION	12	20	7	8	20	12	RCPTS EXT	1.0			3/4"	12
12	3/4"		1.0		RCPTS CONCESSION	12	20	9	10	20	12	RCPTS RESTROOMS, STORAGE		1.0		3/4"	12
12	3/4"			1.0	RCPTS CONCESSION	12	20	11	12	20	12	RCPTS CONCESSION			1.0	3/4"	12
12	3/4"	1.0			RCPTS CONCESSION	12	20	13	14	20	12	RCPTS CONCESSION	1.0			3/4"	12
12	3/4"		1.0		RCPTS CONCESSION	12	20	15	16	20	12	RCPTS CONCESSION		1.0		3/4"	12
12	3/4"			1.0	RCPTS CONCESSION	12	20	17	18	20	12	RCPTS CONCESSION			1.0	3/4"	12
12	3/4"	1.0			RCPTS CONCESSION	12	20	19	20	20	12	RCPTS CONCESSION	1.0			3/4"	12
12	3/4"		1.0		RCPTS CONCESSION	12	20	21	22	30/2	10	WH-3		2.3		3/4"	10
12	3/4"			1.7	EUH-1-1G00.2	12	20/	23	24			-			2.3		
		1.7			-			25	26	20/3	12	EUH-1-1G05.2	1.7			3/4"	12
			1.7		-			27	28			-		1.7			
12	3/4"			1.7	EUH-1-1G03	12	20/	29	30			-			1.7		
		1.7			-			31	32	20	12	LTG RESTROOMS	1.0			3/4"	12
			1.7		-			33	34	20	12	LTG CONCESSION ARA		1.0		3/4"	12
12	3/4"			1.7	EUH-1-1G05.1	12	20/	35	36	20	12	RCPTS CONCESSION			0.8	3/4"	12
		1.7			-			37	38	20	12	RCPTS CONCESSION	0.8			3/4"	12
			1.7		-			39	40			SPACE ONLY					
12	3/4"			1.7	EUH-1-1G05.2	12	20/	41	42			SPACE ONLY					
		1.7			-			43	44			SPACE ONLY					
			1.7		-			45	46			SPACE ONLY					
					SPACE ONLY			47	48			SPACE ONLY					
		1.0			SPARE		20	49	50	20		SPARE	1.0				
			1.0		SPARE		20	51	52	20		SPARE		1.0			
				1.0	SPARE		20	53	54	20		SPARE			1.0		
		11.7	11.7	10.7	SUB-TOTAL KVA							KVA SUB-TOTAL	8.5	9.0	8.8		
												KVA GROSS-TOTAL	20.1	20.6	19.4		60.2

PANEL "DM" - 200A MCB, 120/208V, 3 PHASE, 4 WIRE, 10,000AIC

CIRCUIT NO.	BREAKER SIZE	WIRE SIZE	DIMMER SIZE	CONTROL NO.	USAGE	LOAD	REMARKS
1	1P 20A	10	2.0 KW	PROGRAM	HOUSE	400	LED
2	1P 20A	10	2.0 KW	PROGRAM	HOUSE	400	LED
3	1P 20A	10	2.0 KW	PROGRAM	HOUSE	400	LED
4	1P 20A	10	2.0 KW	PROGRAM	HOUSE	400	LED
5	1P 20A	10	2.0 KW	PROGRAM	HOUSE	400	LED
6	1P 20A	10	2.0 KW	PROGRAM	HOUSE	400	LED
7	1P 20A	10	2.0 KW	PROGRAM	WALL WASH	760	LED
8	1P 20A	10	2.0 KW	PROGRAM	STAGE WORLIGHTS	350	LED
9	1P 20A	10	2.0 KW	PROGRAM	STAGE EDGE	350	LED
10	1P 20A	10	2.0 KW	PROGRAM	FOH SPOTS	250	LED
11	1P 20A	10	2.0 KW	PROGRAM	ONSTAGE	600	LED
12	1P 20A	10	2.0 KW	PROGRAM	ONSTAGE	600	LED
13	1P 20A	10	2.0 KW	PROGRAM	ONSTAGE	600	LED
14	1P 20A	10	2.0 KW	PROGRAM	ONSTAGE	600	LED
15	1P 20A	10	2.0 KW	PROGRAM	ONSTAGE	600	LED
16	1P 20A	10	2.0 KW	PROGRAM	ONSTAGE	600	LED
17	1P 20A	10	2.0 KW	PROGRAM	ONSTAGE	600	LED
18	1P 20A	10	2.0 KW	PROGRAM	1ST ELECTRIC SPOTS/WASH	550	LED
19	1P 20A	10	2.0 KW	PROGRAM	1ST ELECTRIC SPOTS/WASH	550	LED
20	1P 20A	10	2.0 KW	PROGRAM	1st ELECTRIC SPOTS/WASH	550	LED
21	1P 20A	10	2.0 KW	PROGRAM	1st ELECTRIC SPOTS/WASH	550	LED
22	1P 20A	10	2.0 KW	PROGRAM	1st ELECTRIC SPOTS/WASH	550	LED
23	1P 20A	10	2.0 KW	PROGRAM	2nd ELECTRIC SPOTS/WASH	200	LED
24	1P 20A	10	2.0 KW	PROGRAM	2ND ELECTRIC SPOTS/WASH	200	LED
25	1P 20A	10	2.0 KW	PROGRAM	2ND ELECTRIC SPOTS/WASH	200	LED
26	1P 20A	10	2.0 KW	PROGRAM	2nd ELECTRIC SPOTS/WASH	200	LED
27	1P 20A	10	2.0 KW	PROGRAM	2nd ELECTRIC SPOTS/WASH	200	LED
28	1P 20A	10	2.0 KW	PROGRAM	2nd ELECTRIC SPOTS/WASH	200	LED
29	1P 20A	10	2.0 KW	PROGRAM	3RD ELECTRIC SPOTS/WASH	200	LED
30	1P 20A	10	2.0 KW	PROGRAM	3RD ELECTRIC SPOTS/WASH	200	LED
31	1P 20A	10	2.0 KW	PROGRAM	3rd ELECTRIC SPOTS/WASH	200	LED
32	1P 20A	10	2.0 KW	PROGRAM	3rd ELECTRIC SPOTS/WASH	200	LED
33	1P 20A	10	2.0 KW	PROGRAM	3rd ELECTRIC SPOTS/WASH	200	LED
34	1P 20A	10	2.0 KW	PROGRAM	3rd ELECTRIC SPOTS/WASH	200	LED
35	1P 20A	10	2.0 KW	PROGRAM	STORAGE	200	LED
36	1P 20A	10	2.0 KW	PROGRAM	CORRIDOR	200	
37	1P 20A	10	2.0 KW	PROGRAM	DRESSING ROOM	200	
38	1P 20A	10	2.0 KW	PROGRAM	SPARE	500	
39	1P 20A	10	2.0 KW	PROGRAM	SPARE	500	
40	1P 20A	10	2.0 KW	PROGRAM	SPARE	500	
41	1P 20A	10	2.0 KW	PROGRAM	SPARE	500	
42	1P 20A	10	2.0 KW	PROGRAM	SPARE	500	
43	1P 20A	10	2.0 KW	PROGRAM	SPARE		
44	1P 20A		2.0 KW	PROGRAM	SPACE		
45	1P 20A		2.0 KW	PROGRAM	SPACE		
46	1P 20A		2.0 KW	PROGRAM	SPACE		
47	1P 20A		2.0 KW	PROGRAM	SPACE		
48	1P 20A		2.0 KW	PROGRAM	SPACE		

* ROUTE CIRCUIT THROUGH EMERGENCY TRANSFER RELAY, (MAX 2000W PER CIRCUIT)
INTERFACE FIRE ALARM SYSTEM WITH DIMMER PANEL AND DRIVE HOUSE LIGHTING TO "FULL ON" WITH GENERAL FIRE ALARM

SYM	DESCRIPTION	DATE	APPR

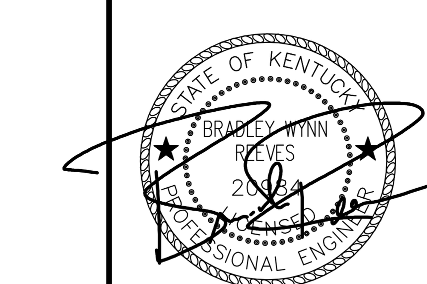

SEAL

EWING COLE
Federal Reserve Bank Building
100 North 6th Street
Philadelphia, PA 19106-1590
Tel: 215-923-2020 Fax: 215-574-0952

A/E INFO

APPROVED

FOR COMMANDER NAVFAC

ACTIVITY

SATISFACTORY TO DATE

BWR KDM BKB

PM/DM

BRANCH MANAGER

CHIEF ENG/ ARCH

FIRE PROTECTION

DEPARTMENT OF THE NAVY NAVAL FACILITIES ENGINEERING COMMAND
NAVAL FACILITIES ENGINEERING COMMAND ~ WASHINGTON
DoDEA MARINE CORPS BASE QUANTICO, VIRGINIA
MARINE CORPS BASE QUANTICO QUANTICO, VA

REPLACE QUANTICO M/H SCHOOL

PANEL SCHEDULES

SCALE:

PROJECT NO.: P-021

CONSTR. CONTR. NO. W91236-15-C-0023

NAVFAC DRAWING NO. 13091420

SHEET 666 OF 789

E709

RTA SUBMISSION - 10/13/2016

DRAWFORM REVISION: 10 MARCH 2009

File Path