cvm

DESIGN CALCULATIONS FOR LANDSCAPE ITEMS

Replace Quantico M/H School
Naval Facilities Engineering Command - Washington

Jon E. Morrison
VA P.E. Lic. No. 026353

1002 west 9th Avenue
King of Prussia, PA 19406

phone 610.989.3800
fax 610.989.3677

cvmprofessional.com

Prepared For:
Cairone & Kaupp, Inc.
1118 East Columbia Avenue
Philadelphia, PA 19125

cvm
1002 West 9th Avenue, King Of Prussia, PA 19406
610-989-3800 610-989-3677 Fax

JOB QMHS
SHEET NO. 1 OF
CALCULATED BY KLA DATE 4/20/16
CHECKED BY DATE
SCALE LANDSCAPE DESIGN ITEMS

1) AMPHITHEATER SEAT WALLS 1/L519

a) CONCRETE SPREAD FTG; TRY 3'-0" x 12" DEEP.

SET: (12")(16")(0.0018) = 0.35/2 = 0.17 IN²

∴ #4 @ 16" O.C. SHOWN ON L-ARCH DWGS IS ACCEPTABLE

DEAD LOAD:

FTG: 3' x 1' x 150 PCF = 450 #/,

WALL: 4' x 1' x 150 PCF = 600 #/,

STONE: COPING + VENEER ≅ 200 #/,

1250 #/,

LIVE LOAD: 200 #

$$\frac{P}{A} = \frac{1450\ \#}{3(1)} = 483\ PSF \ll 3000\ PSF$$

OK ✓

b) CMU RETAINING WALL.

• ASSUME FULL RETAINING IF BACKFILL ONE SIDE FIRST

H = 4'-0"

Ka = 40H (psf) = 40(1) = 40 psf/ft

∴ SEE ENERCALC #4 @ 16" O.C. ACCEPTABLE PER L-ARCH DWGS.

cvm
1002 West 9th Avenue, King Of Prussia, PA 19406
610-989-3800 610-989-3677 Fax

JOB
SHEET NO. 2 OF
CALCULATED BY DATE
CHECKED BY DATE
SCALE

STAIR ON GRADE HANDRAIL (2 & 4/L519)

- 3'-0" TALL ; END POST
- APPLY 200 # LOAD @ TOP OF POST.
- 1½" ϕ (1.9" O.D.)
- ASSUME 6" EDGE DIST

$$M_u = 1.6(200\#)(3') = 960\ \#\text{-FT}$$

$$V_u = 1.6(200\#) = 320\ \#$$

CONSIDER POST EMBED

$$A = 3.81\sqrt{\frac{M}{dg}}$$

A = DEPTH REQD
d = ϕ
g = CONC. COMP. STR.

$$= 3.81\sqrt{\frac{11.52\ \text{K·IN}}{1.9''(3\ \text{KSI})}}$$

= 5.42 IN. < 8 IN PER L-ARCH DWGS

$$F_p = \phi(0.85 f'_c) = 0.65(0.85)(3000) = 1658\ \text{PSI}$$

$$\text{TEN/COMP} = 11.52\ \text{K·IN} / 8'' \times 2/3 = 2.16\ \text{KIPS}$$

$$\text{Area} = \left(\frac{2\pi r}{2}\right)(8''\ \text{EMBED}) = 23.9$$

$$f_p = \frac{2.16}{23.9} = 90.4\ \text{PSI} < 1658\ \text{PSI}$$ OK ✓

Cantilevered Retaining Wall

File = R:\New Projects\LRS\Quantico\Engineering\Enercalc\landscape design.ec6
ENERCALC, INC. 1983-2016, Build:6.16.6.7, Ver:6.16.6.7

Lic. # : KW-06000330 **Licensee : cvm engineers**

Description : Amphiteater Seat Wall - 1/L519

Calculations per ACI 318-11, ACI 530-11, IBC 2012, CBC 2013, ASCE 7-10

Criteria

Retained Height	=	3.50 ft
Wall height above soil	=	0.00 ft
Slope Behind Wall	=	0.00 : 1
Height of Soil over Toe	=	0.00 in
Water height over heel	=	0.0 ft

Vertical component of active
Lateral soil pressure options:
NOT USED for Soil Pressure.
NOT USED for Sliding Resistance.
NOT USED for Overturning Resistance.

Soil Data

Allow Soil Bearing	=	3,000.0 psf
Equivalent Fluid Pressure Method		
Heel Active Pressure	=	40.0 psf/ft
Toe Active Pressure	=	40.0 psf/ft
Passive Pressure	=	389.0 psf/ft
Soil Density, Heel	=	135.00 pcf
Soil Density, Toe	=	135.00 pcf
Friction Coeff btwn Ftg & Soil	=	0.400
Soil height to ignore for passive pressure	=	12.00 in

Surcharge Loads

Surcharge Over Heel	=	0.0 psf
NOT Used To Resist Sliding & Overturning		
Surcharge Over Toe	=	0.0 psf
NOT Used for Sliding & Overturning		

Lateral Load Applied to Stem

Lateral Load	=	0.0 plf
...Height to Top	=	0.00 ft
...Height to Bottom	=	0.00 ft
Wind on Exposed Stem	=	0.0 psf

Adjacent Footing Load

Adjacent Footing Load	=	0.0 lbs
Footing Width	=	0.00 ft
Eccentricity	=	0.00 in
Wall to Ftg CL Dist	=	0.00 ft
Footing Type		Line Load
Base Above/Below Soil at Back of Wall	=	0.0 ft
Poisson's Ratio	=	0.300

Axial Load Applied to Stem

Axial Dead Load	=	200.0 lbs
Axial Live Load	=	0.0 lbs
Axial Load Eccentricity	=	0.0 in

Design Summary

Wall Stability Ratios

Overturning	=	6.29	OK
Sliding	=	1.85	OK

Total Bearing Load	=	1,781	lbs
...resultant ecc.	=	0.43	in

Soil Pressure @ Toe	=	478	psf	OK
Soil Pressure @ Heel	=	540	psf	OK
Allowable	=	3,000	psf	

Soil Pressure Less Than Allowable

ACI Factored @ Toe	=	573	psf	
ACI Factored @ Heel	=	648	psf	
Footing Shear @ Toe	=	5.0	psi	OK
Footing Shear @ Heel	=	9.2	psi	OK
Allowable	=	94.9	psi	

Sliding Calcs (Vertical Component NOT Used)

Lateral Sliding Force	=		385.0	lbs
less 100% Passive Force	=	-	0.0	lbs
less 100% Friction Force	=	-	710.6	lbs
Added Force Req'd	=		0.0	lbs OK
....for 1.5 : 1 Stability	=		0.0	lbs OK

Load Factors

Dead Load	1.200
Live Load	1.600
Earth, H	1.600
Wind, W	1.600
Seismic, E	1.000

Stem Construction

Top Stem

			Stem OK
Design Height Above Ftg	ft =		0.00
Wall Material Above "Ht"	=		Masonry
Thickness	in =		12.00
Rebar Size	=		# 4
Rebar Spacing	in =		16.00
Rebar Placed at	=		Edge

Design Data

fb/FB + fa/Fa	=	0.145
Total Force @ Section	lbs =	245.0
Moment....Actual	ft-l =	285.8
Moment.....Allowable	ft-l =	2,107.2
Shear.....Actual	psi =	2.3
Shear.....Allowable	psi =	44.7
Wall Weight	psf =	133.0
Rebar Depth 'd'	in =	9.00
Lap splice if above	in =	24.00
Lap splice if below	in =	6.00
Hook embed into footing	in =	6.00

Masonry Data

f'm	psi =	2,000
Fy (	psi =	20,000
Solid Grouting	=	Yes
Modular Ratio 'n'	=	16.11
Short Term Factor	=	1.000
Equiv. Solid Thick.	in =	11.60
Masonry Block Type	=	3
Masonry Design Method	=	ASD

Cantilevered Retaining Wall

File = R:\New Projects\LRS\Quantico\Engineering\Enercalc\landscape design.ec6
ENERCALC, INC. 1983-2016, Build:6.16.6.7, Ver:6.16.6.7

Lic. # : KW-06000330 **Licensee : cvm engineers**

Description : Amphiteater Seat Wall - 1/L519

Footing Dimensions & Strengths

Toe Width	=	1.25 ft
Heel Width	=	2.25
Total Footing Width	=	3.50
Footing Thickness	=	12.00 in
Key Width	=	0.00 in
Key Depth	=	0.00 in
Key Distance from Toe	=	0.00 ft

f'c = 4,000 psi Fy = 60,000 psi
Footing Concrete Density = 150.00 pcf
Min. As % = 0.0018
Cover @ Top 3.00 @ Btm.= 3.00 in

Footing Design Results

		Toe	Heel	
Factored Pressure	=	573	648	psf
Mu' : Upward	=	657	0	ft-lb
Mu' : Downward	=	203	0	ft-lb
Mu: Design	=	454	457	ft-lb
Actual 1-Way Shear	=	4.98	9.15	psi
Allow 1-Way Shear	=	94.87	94.87	psi

Toe Reinforcing = # 4 @ 16.00 in
Heel Reinforcing = # 4 @ 18.00 in
Key Reinforcing = None Spec'd

Other Acceptable Sizes & Spacings

Toe: Not req'd, Mu < S * Fr
Heel: Not req'd, Mu < S * Fr
Key: No key defined

Summary of Overturning & Resisting Forces & Moments

Item		.....OVERTURNING..... Force lbs	Distance ft	Moment ft-lb
Heel Active Pressure	=	405.0	1.50	607.5
Surcharge over Heel	=			
Toe Active Pressure	=	-20.0	0.33	-6.7
Surcharge Over Toe	=			
Adjacent Footing Load	=			
Added Lateral Load	=			
Load @ Stem Above Soil	=			
Total	=	385.0	O.T.M. =	600.8

Resisting/Overturning Ratio = 6.29
Vertical Loads used for Soil Pressure = 1,781.1 lbs

		.....RESISTING..... Force lbs	Distance ft	Moment ft-lb
Soil Over Heel	=	590.6	2.88	1,698.0
Sloped Soil Over Heel	=			
Surcharge Over Heel	=			
Adjacent Footing Load	=			
Axial Dead Load on Stem	=	200.0	1.75	350.0
* Axial Live Load on Stem	=			
Soil Over Toe	=			
Surcharge Over Toe	=			
Stem Weight(s)	=	465.5	1.75	814.6
Earth @ Stem Transitions	=			
Footing Weight	=	525.0	1.75	918.8
Key Weight	=			
Vert. Component	=			
Total	=	1,781.1 lbs	R.M. =	3,781.4

* Axial live load NOT included in total displayed, or used for overturning resistance, but is included for soil pressure calculation.

Cantilevered Retaining Wall

File = R:\New Projects\LRS\Quantico\Engineering\Enercalc\landscape design.ec6
ENERCALC, INC. 1983-2016, Build:6.16.6.7, Ver:6.16.6.7

Lic. # : KW-06000330 **Licensee : cvm engineers**

Description : Learning Wall - 1/L517

Calculations per ACI 318-11, ACI 530-11, IBC 2012, CBC 2013, ASCE 7-10

Criteria

Retained Height	=	3.50 ft
Wall height above soil	=	6.50 ft
Slope Behind Wall	=	0.00 : 1
Height of Soil over Toe	=	42.00 in
Water height over heel	=	0.0 ft

Vertical component of active
Lateral soil pressure options:
NOT USED for Soil Pressure.
NOT USED for Sliding Resistance.
NOT USED for Overturning Resistance.

Soil Data

Allow Soil Bearing	=	3,000.0 psf
Equivalent Fluid Pressure Method		
Heel Active Pressure	=	40.0 psf/ft
Toe Active Pressure	=	40.0 psf/ft
Passive Pressure	=	389.0 psf/ft
Soil Density, Heel	=	135.00 pcf
Soil Density, Toe	=	135.00 pcf
Friction Coeff btwn Ftg & Soil	=	0.400
Soil height to ignore for passive pressure	=	12.00 in

Surcharge Loads

Surcharge Over Heel	=	0.0 psf
NOT Used To Resist Sliding & Overturning		
Surcharge Over Toe	=	0.0 psf
NOT Used for Sliding & Overturning		

Lateral Load Applied to Stem

Lateral Load	=	0.0 plf
...Height to Top	=	0.00 ft
...Height to Bottom	=	0.00 ft
Wind on Exposed Stem	=	21.0 psf

Adjacent Footing Load

Adjacent Footing Load	=	0.0 lbs
Footing Width	=	0.00 ft
Eccentricity	=	0.00 in
Wall to Ftg CL Dist	=	0.00 ft
Footing Type		Line Load
Base Above/Below Soil at Back of Wall	=	0.0 ft
Poisson's Ratio	=	0.300

Axial Load Applied to Stem

Axial Dead Load	=	0.0 lbs
Axial Live Load	=	0.0 lbs
Axial Load Eccentricity	=	0.0 in

Design Summary

Wall Stability Ratios

Overturning	=	6.33	OK
Sliding	=	37.24	OK

Total Bearing Load	=	3,348	lbs
...resultant ecc.	=	3.79	in

Soil Pressure @ Toe	=	1,234	psf	OK
Soil Pressure @ Heel	=	440	psf	OK
Allowable	=	3,000	psf	

Soil Pressure Less Than Allowable

ACI Factored @ Toe	=	1,480	psf	
ACI Factored @ Heel	=	528	psf	
Footing Shear @ Toe	=	5.4	psi	OK
Footing Shear @ Heel	=	11.0	psi	OK
Allowable	=	82.2	psi	

Sliding Calcs (Vertical Component NOT Used)

Lateral Sliding Force	=	136.5	lbs
less 100% Passive Force	= -	3,744.1	lbs
less 100% Friction Force	= -	1,339.0	lbs
Added Force Req'd	=	0.0	lbs OK
....for 1.5 : 1 Stability	=	0.0	lbs OK

Load Factors

Dead Load	1.200
Live Load	1.600
Earth, H	1.600
Wind, W	1.600
Seismic, E	1.000

Stem Construction

Top Stem

			Stem OK
Design Height Above Ftg	ft =		0.00
Wall Material Above "Ht"	=		Masonry
Thickness	in =		12.00
Rebar Size	=		# 4
Rebar Spacing	in =		16.00
Rebar Placed at	=		Center
Design Data			
fb/FB + fa/Fa	=		0.579
Total Force @ Section	lbs =		136.5
Moment....Actual	ft-l =		921.4
Moment.....Allowable	ft-l =		1,591.6
Shear.....Actual	psi =		2.0
Shear.....Allowable	psi =		44.7
Wall Weight	psf =		133.0
Rebar Depth 'd'	in =		5.75
Lap splice if above	in =		24.00
Lap splice if below	in =		6.00
Hook embed into footing	in =		6.00
Masonry Data			
f'm	psi =		2,000
Fy (	psi =		24,000
Solid Grouting	=		Yes
Modular Ratio 'n'	=		16.11
Short Term Factor	=		1.000
Equiv. Solid Thick.	in =		11.60
Masonry Block Type	=	3	
Masonry Design Method	=	ASD	

Cantilevered Retaining Wall

File = R:\New Projects\LRS\Quantico\Engineering\Enercalc\landscape design.ec6
ENERCALC, INC. 1983-2016, Build:6.16.6.7, Ver:6.16.6.7

Lic. # : KW-06000330 **Licensee : cvm engineers**

Description : Learning Wall - 1/L517

Footing Dimensions & Strengths

Toe Width	=	1.50 ft
Heel Width	=	2.50
Total Footing Width	=	4.00
Footing Thickness	=	12.00 in
Key Width	=	0.00 in
Key Depth	=	0.00 in
Key Distance from Toe	=	0.00 ft

f'c = 3,000 psi Fy = 60,000 psi
Footing Concrete Density = 150.00 pcf
Min. As % = 0.0014
Cover @ Top 3.00 @ Btm.= 3.00 in

Footing Design Results

		Toe	Heel	
Factored Pressure	=	1,480	528	psf
Mu' : Upward	=	2,054	0	ft-lb
Mu' : Downward	=	1,144	1,144	ft-lb
Mu: Design	=	910	1,144	ft-lb
Actual 1-Way Shear	=	5.38	10.99	psi
Allow 1-Way Shear	=	82.16	82.16	psi

Toe Reinforcing = # 4 @ 12.00 in
Heel Reinforcing = # 4 @ 12.00 in
Key Reinforcing = None Spec'd

Other Acceptable Sizes & Spacings

Toe: Not req'd, Mu < S * Fr
Heel: Not req'd, Mu < S * Fr
Key: No key defined

Summary of Overturning & Resisting Forces & Moments

Item		.....OVERTURNING..... Force lbs	Distance ft	Moment ft-lb
Heel Active Pressure	=	405.0	1.50	607.5
Surcharge over Heel	=			
Toe Active Pressure	=	-405.0	1.50	-607.5
Surcharge Over Toe	=			
Adjacent Footing Load	=			
Added Lateral Load	=			
Load @ Stem Above Soil	=	136.5	7.75	1,057.9
Total	=	136.5	O.T.M. =	1,057.9

Resisting/Overturning Ratio = 6.33
Vertical Loads used for Soil Pressure = 3,347.5 lbs

		.....RESISTING..... Force lbs	Distance ft	Moment ft-lb
Soil Over Heel	=	708.8	3.25	2,303.4
Sloped Soil Over Heel	=			
Surcharge Over Heel	=			
Adjacent Footing Load	=			
Axial Dead Load on Stem	=			
* Axial Live Load on Stem	=			
Soil Over Toe	=	708.8	0.75	531.6
Surcharge Over Toe	=			
Stem Weight(s)	=	1,330.0	2.00	2,660.0
Earth @ Stem Transitions	=			
Footing Weight	=	600.0	2.00	1,200.0
Key Weight	=			
Vert. Component	=			
Total	=	3,347.5 lbs	R.M. =	6,695.0

* Axial live load NOT included in total displayed, or used for overturning resistance, but is included for soil pressure calculation.

Cantilevered Retaining Wall

File = R:\New Projects\LRS\Quantico\Engineering\Enercalc\landscape design.ec6
ENERCALC, INC. 1983-2016, Build:6.16.6.7, Ver:6.16.6.7

Lic. # : KW-06000330 **Licensee : cvm engineers**

Description : Concrete Wall - 2/L518

Calculations per ACI 318-11, ACI 530-11, IBC 2012, CBC 2013, ASCE 7-10

Criteria

Retained Height	=	9.00 ft
Wall height above soil	=	3.00 ft
Slope Behind Wall	=	0.00 : 1
Height of Soil over Toe	=	24.00 in
Water height over heel	=	0.0 ft

Vertical component of active
Lateral soil pressure options:
NOT USED for Soil Pressure.
NOT USED for Sliding Resistance.
NOT USED for Overturning Resistance.

Soil Data

Allow Soil Bearing	=	3,000.0 psf
Equivalent Fluid Pressure Method		
Heel Active Pressure	=	40.0 psf/ft
Toe Active Pressure	=	40.0 psf/ft
Passive Pressure	=	389.0 psf/ft
Soil Density, Heel	=	135.00 pcf
Soil Density, Toe	=	135.00 pcf
Friction Coeff btwn Ftg & Soil	=	0.400
Soil height to ignore for passive pressure	=	12.00 in

Surcharge Loads

Surcharge Over Heel	=	0.0 psf
NOT Used To Resist Sliding & Overturning		
Surcharge Over Toe	=	0.0 psf
NOT Used for Sliding & Overturning		

Lateral Load Applied to Stem

Lateral Load	=	544.0 plf
...Height to Top	=	12.00 ft
...Height to Bottom	=	11.00 ft
Wind on Exposed Stem	=	21.0 psf

Adjacent Footing Load

Adjacent Footing Load	=	0.0 lbs
Footing Width	=	0.00 ft
Eccentricity	=	0.00 in
Wall to Ftg CL Dist	=	0.00 ft
Footing Type		Line Load
Base Above/Below Soil at Back of Wall	=	0.0 ft
Poisson's Ratio	=	0.300

Axial Load Applied to Stem

Axial Dead Load	=	0.0 lbs
Axial Live Load	=	0.0 lbs
Axial Load Eccentricity	=	0.0 in

Design Summary

Wall Stability Ratios

Overturning	=	1.51	OK
Sliding	=	1.72	OK

Total Bearing Load	=	5,584	lbs
...resultant ecc.	=	22.32	in

Soil Pressure @ Toe	=	2,678	psf	OK
Soil Pressure @ Heel	=	0	psf	OK
Allowable	=	3,000	psf	

Soil Pressure Less Than Allowable

ACI Factored @ Toe	=	3,214	psf
ACI Factored @ Heel	=	0	psf

Footing Shear @ Toe	=	17.0	psi	OK
Footing Shear @ Heel	=	27.3	psi	OK
Allowable	=	75.0	psi	

Sliding Calcs (Vertical Component NOT Used)

Lateral Sliding Force	=	2,567.0	lbs
less 100% Passive Force	= -	2,188.1	lbs
less 100% Friction Force	= -	2,238.6	lbs

Added Force Req'd	=	0.0	lbs	OK
....for 1.5 : 1 Stability	=	0.0	lbs	OK

Load Factors

Dead Load	1.200
Live Load	1.600
Earth, H	1.600
Wind, W	1.600
Seismic, E	1.000

Stem Construction

		Top Stem	2nd Stem OK
Design Height Above Ftg	ft =	9.00	8.75
Wall Material Above "Ht"	=	Fence	Concrete
Thickness	in =	0.00	12.00
Rebar Size	=	# 5	# 5
Rebar Spacing	in =	32.00	12.00
Rebar Placed at	=	Edge	Edge
Design Data			
fb/FB + fa/Fa	=	0.579	0.120
Total Force @ Section	lbs =	63.0	646.8
Moment....Actual	ft-l =	94.5	1,672.6
Moment.....Allowable	ft-l =	0.0	13,892.6
Shear.....Actual	psi =	0.0	8.0
Shear.....Allowable	psi =	0.0	94.9
Wall Weight	psf =	0.0	150.0
Rebar Depth 'd'	in =	0.00	10.19
Lap splice if above	in =	0.00	18.50
Lap splice if below	in =	0.00	3.60
Hook embed into footing	in =	0.00	3.60
Concrete Data			
f'c	psi =	2,000.0	4,000.0
Fy	psi =	60,000.0	60,000.0

Cantilevered Retaining Wall

File = R:\New Projects\LRS\Quantico\Engineering\Enercalc\landscape design.ec6
ENERCALC, INC. 1983-2016, Build:6.16.6.7, Ver:6.16.6.7

Lic. # : KW-06000330 **Licensee : cvm engineers**

Description : Concrete Wall - 2/L518

Footing Dimensions & Strengths

Toe Width	=	2.75 ft
Heel Width	=	3.75
Total Footing Width	=	6.50
Footing Thickness	=	18.00 in
Key Width	=	0.00 in
Key Depth	=	0.00 in
Key Distance from Toe	=	0.00 ft

f'c = 2,500 psi Fy = 60,000 psi
Footing Concrete Density = 150.00 pcf
Min. As % = 0.0018
Cover @ Top 3.00 @ Btm.= 3.00 in

Footing Design Results

		Toe	Heel	
Factored Pressure	=	3,214	0	psf
Mu' : Upward	=	0	0	ft-lb
Mu' : Downward	=	0	0	ft-lb
Mu: Design	=	1,673	1,673	ft-lb
Actual 1-Way Shear	=	16.99	27.31	psi
Allow 1-Way Shear	=	75.00	75.00	psi

Toe Reinforcing = # 4 @ 12.00 in
Heel Reinforcing = # 4 @ 12.00 in
Key Reinforcing = None Spec'd

Other Acceptable Sizes & Spacings

Toe: Not req'd, Mu < S * Fr
Heel: Not req'd, Mu < S * Fr
Key: No key defined

Summary of Overturning & Resisting Forces & Moments

Item		.....OVERTURNING..... Force lbs	Distance ft	Moment ft-lb
Heel Active Pressure	=	2,205.0	3.50	7,717.5
Surcharge over Heel	=			
Toe Active Pressure	=	-245.0	1.17	-285.8
Surcharge Over Toe	=			
Adjacent Footing Load	=			
Added Lateral Load	=	544.0	13.00	7,072.0
Load @ Stem Above Soil	=	63.0	12.00	756.0
Total	=	2,567.0	O.T.M. =	15,259.7

Resisting/Overturning Ratio = 1.51
Vertical Loads used for Soil Pressure = 5,583.8 lbs

		.....RESISTING..... Force lbs	Distance ft	Moment ft-lb
Soil Over Heel	=	3,341.3	5.13	17,123.9
Sloped Soil Over Heel	=			
Surcharge Over Heel	=			
Adjacent Footing Load	=			
Axial Dead Load on Stem	=			
* Axial Live Load on Stem	=			
Soil Over Toe	=	742.5	1.38	1,020.9
Surcharge Over Toe	=			
Stem Weight(s)	=	37.5	3.25	121.9
Earth @ Stem Transitions	=			
Footing Weight	=	1,462.5	3.25	4,753.1
Key Weight	=			
Vert. Component	=			
Total	=	5,583.8 lbs	R.M. =	23,019.8

* Axial live load NOT included in total displayed, or used for overturning resistance, but is included for soil pressure calculation.

Company:		Page:	1
Specifier:		Project:	
Address:		Sub-Project I Pos. No.:	
Phone I Fax:	|	Date:	10/10/2016
E-Mail:			

Specifier's comments:

1 Input data

Anchor type and diameter:	**AWS D1.1 GR. B 1/2**
Effective embedment depth:	h_{ef} = 6.000 in.
Material:	
Proof:	Design method ACI 318-08 / CIP
Stand-off installation:	e_b = 0.000 in. (no stand-off); t = 0.750 in.
Anchor plate:	; E = 0 psi; f_{yk} = 35998 psi; γ_{Ms} = 1.100
	l_x x l_y x t = 6.000 in. x 6.000 in. x 0.750 in.; (Recommended plate thickness: calculated (0.039 in.))
Profile:	Round HSS, Steel pipe (AISC); (L x W x T) = 2.880 in. x 2.880 in. x 0.203 in.
Base material:	cracked concrete, 4000, f_c' = 4000 psi; h = 60.000 in.
Reinforcement:	tension: condition B, shear: condition B;
	edge reinforcement: none or < No. 4 bar
Seismic loads (cat. C, D, E, or F)	no

Geometry [in.] & Loading [lb, in.lb]

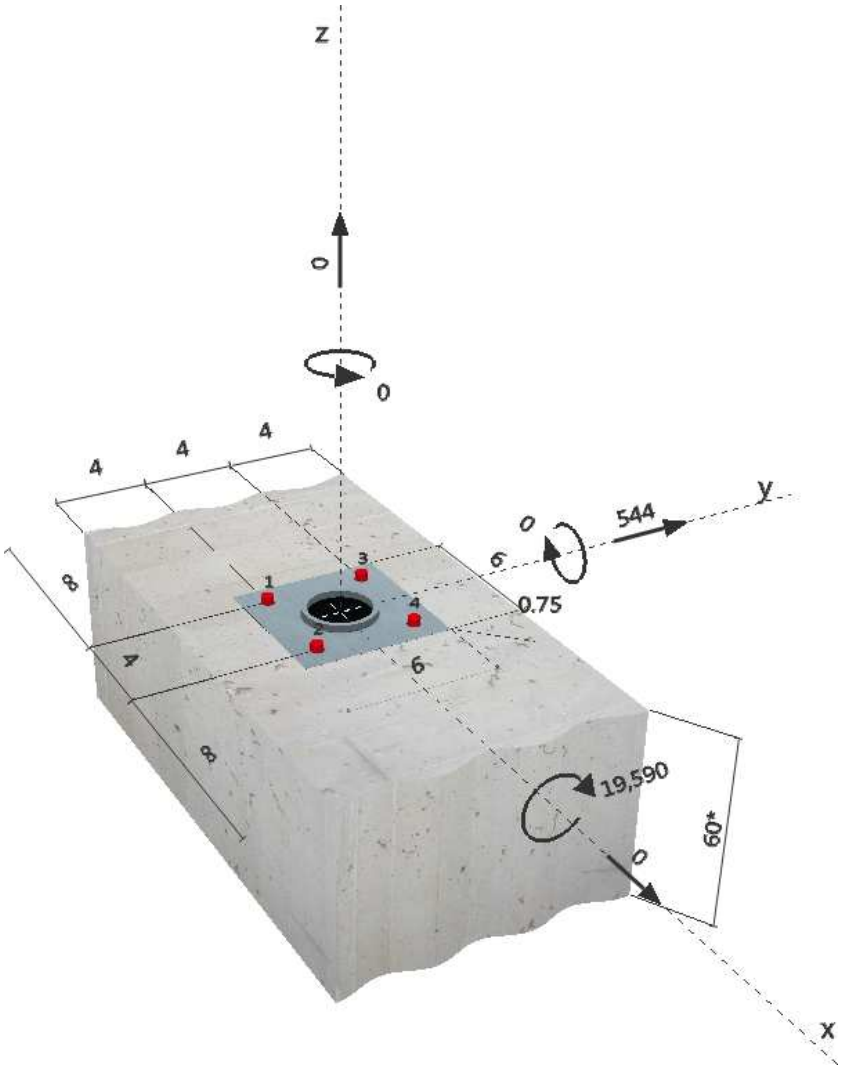

PROFIS Anchor (c) 2003-2009 Hilti AG, FL-9494 Schaan Hilti is a registered Trademark of Hilti AG, Schaan

2 Load case/Resulting anchor forces

Load case: Design loads

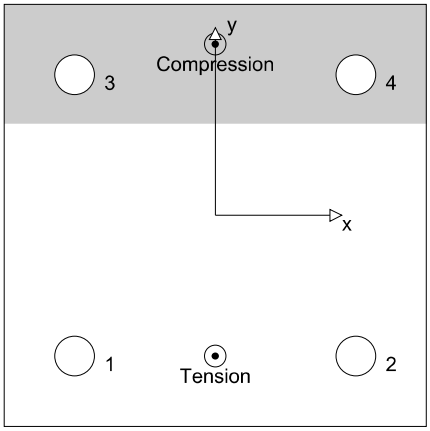

Anchor reactions [lb]
Tension force: (+Tension, -Compression)

Anchor	Tension force	Shear force	Shear force x	Shear force y
1	2209	136	0	136
2	2209	136	0	136
3	0	136	0	136
4	0	136	0	136

max. concrete compressive strain: 0.20 [‰]
max. concrete compressive stress: 868 [psi]
resulting tension force in (x/y)=(0.000/-2.000): 4418 [lb]
resulting compression force in (x/y)=(0.000/2.434): 4418 [lb]

3 Tension load

	Load N_{ua} [lb]	Capacity ϕN_n [lb]	Utilization $\beta_N = N_{ua}/\phi N_n$	Status
Steel Strength*	2209	9555	24	OK
Pullout Strength*	2209	13194	17	OK
Concrete Breakout Strength**	4418	10603	42	OK
Concrete Side-Face Blowout, direction **	N/A	N/A	N/A	N/A

* anchor having the highest loading **anchor group (anchors in tension)

3.1 Steel Strength

$N_{sa} = A_{se,N} f_{uta}$ ACI 318-08 Eq. (D-3)
$\phi N_{sa} \geq N_{ua}$ ACI 318-08 Eq. (D-1)

Variables

$A_{se,N}$ [in.^{2}]	f_{uta} [psi]
0.20	65000

Calculations

N_{sa} [lb]
12740

Results

N_{sa} [lb]	ϕ_{steel}	ϕN_{sa} [lb]	N_{ua} [lb]
12740	0.750	9555	2209

3.2 Pullout Strength

$N_{pN} = \psi_{c,p} N_p$ ACI 318-08 Eq. (D-14)
$N_p = 8 A_{brg} f'_c$ ACI 318-08 Eq. (D-15)
$\phi N_{pN} \geq N_{ua}$ ACI 318-08 Eq. (D-1)

Variables

$\psi_{c,p}$	A_{brg} [in.^{2}]	f'_c [psi]
1.000	0.59	4000

Calculations

N_p [lb]
18848

Results

N_{pn} [lb]	$\phi_{concrete}$	ϕN_{pn} [lb]	N_{ua} [lb]
18848	0.700	13194	2209

PROFIS Anchor (c) 2003-2009 Hilti AG, FL-9494 Schaan Hilti is a registered Trademark of Hilti AG, Schaan

3.3 Concrete Breakout Strength

$N_{cbg} = \left(\frac{A_{Nc}}{A_{Nc0}}\right) \psi_{ec,N}\, \psi_{ed,N}\, \psi_{c,N}\, \psi_{cp,N}\, N_b$ — ACI 318-08 Eq. (D-5)

$\phi\ N_{cbg} \geq N_{ua}$ — ACI 318-08 Eq. (D-1)

A_{Nc} see ACI 318-08, Part D.5.2.1, Fig. RD.5.2.1(b)

$A_{Nc0} = 9\, h_{ef}^2$ — ACI 318-08 Eq. (D-6)

$\psi_{ec,N} = \left(\frac{1}{1 + \frac{2\, e_N'}{3\, h_{ef}}}\right) \leq 1.0$ — ACI 318-08 Eq. (D-9)

$\psi_{ed,N} = 0.7 + 0.3 \left(\frac{c_{a,min}}{1.5 h_{ef}}\right) \leq 1.0$ — ACI 318-08 Eq. (D-11)

$\psi_{cp,N} = \mathrm{MAX}\left(\frac{c_{a,min}}{c_{ac}}, \frac{1.5 h_{ef}}{c_{ac}}\right) \leq 1.0$ — ACI 318-08 Eq. (D-13)

$N_b = k_c\, \lambda\, \sqrt{f_c'}\, h_{ef}^{1.5}$ — ACI 318-08 Eq. (D-7)

Variables

h_{ef} [in.]	$e_{c1,N}$ [in.]	$e_{c2,N}$ [in.]	$c_{a,min}$ [in.]	$\psi_{c,N}$
6.000	0.000	0.000	4.000	1.000

c_{ac} [in.]	k_c	λ	f_c' [psi]
0.000	24	1	4000

Calculations

A_{Nc} [in.^{2}]	A_{Nc0} [in.^{2}]	$\psi_{ec1,N}$	$\psi_{ec2,N}$	$\psi_{ed,N}$	$\psi_{cp,N}$	N_b [lb]
264.00	324.00	1.000	1.000	0.833	1.000	22308

Results

N_{cbg} [lb]	$\phi_{concrete}$	$\phi\ N_{cbg}$ [lb]	N_{ua} [lb]
15148	0.700	10603	4418

PROFIS Anchor (c) 2003-2009 Hilti AG, FL-9494 Schaan Hilti is a registered Trademark of Hilti AG, Schaan

4 Shear load

	Load V_{ua} [lb]	Capacity ϕV_n [lb]	Utilization $\beta_V = V_{ua}/\phi V_n$	Status
Steel Strength*	136	8281	2	OK
Steel failure (with lever arm)*	N/A	N/A	N/A	N/A
Pryout Strength**	544	21207	3	OK
Concrete edge failure in direction y+**	544	10021	6	OK

* anchor having the highest loading **anchor group (relevant anchors)

4.1 Steel Strength

$V_{sa} = A_{se,V} f_{uta}$ ACI 318-08 Eq. (D-19)

$\phi V_{steel} \geq V_{ua}$ ACI 318-08 Eq. (D-2)

Variables

$A_{se,V}$ [in.^{2}]	f_{uta} [psi]
0.20	65000

Calculations

V_{sa} [lb]
12740

Results

V_{sa} [lb]	ϕ_{steel}	ϕV_{sa} [lb]	V_{ua} [lb]
12740	0.650	8281	136

4.2 Pryout Strength

$V_{cpg} = k_{cp} \left[\left(\frac{A_{Nc}}{A_{Nc0}} \right) \psi_{ec,N} \psi_{ed,N} \psi_{c,N} \psi_{cp,N} N_b \right]$ ACI 318-08 Eq. (D-31)

$\phi V_{cpg} \geq V_{ua}$ ACI 318-08 Eq. (D-2)

A_{Nc} see ACI 318-08, Part D.5.2.1, Fig. RD.5.2.1(b)

$A_{Nc0} = 9 h_{ef}^2$ ACI 318-08 Eq. (D-6)

$\psi_{ec,N} = \left(\frac{1}{1 + \frac{2 e'_N}{3 h_{ef}}} \right) \leq 1.0$ ACI 318-08 Eq. (D-9)

$\psi_{ed,N} = 0.7 + 0.3 \left(\frac{c_{a,min}}{1.5 h_{ef}} \right) \leq 1.0$ ACI 318-08 Eq. (D-11)

$\psi_{cp,N} = \text{MAX}\left(\frac{c_{a,min}}{c_{ac}}, \frac{1.5 h_{ef}}{c_{ac}} \right) \leq 1.0$ ACI 318-08 Eq. (D-13)

$N_b = k_c \lambda \sqrt{f'_c} h_{ef}^{1.5}$ ACI 318-08 Eq. (D-7)

Variables

k_{cp}	h_{ef} [in.]	$e_{c1,N}$ [in.]	$e_{c2,N}$ [in.]	$c_{a,min}$ [in.]
2	6.000	0.000	0.000	4.000

$\psi_{c,N}$	c_{ac} [in.]	k_c	λ	f'_c [psi]
1.000	-	24	1	4000

Calculations

A_{Nc} [in.^{2}]	A_{Nc0} [in.^{2}]	$\psi_{ec1,N}$	$\psi_{ec2,N}$	$\psi_{ed,N}$	$\psi_{cp,N}$	N_b [lb]
264.00	324.00	1.000	1.000	0.833	1.000	22308

Results

V_{cpg} [lb]	$\phi_{concrete}$	ϕV_{cpg} [lb]	V_{ua} [lb]
30295	0.700	21207	544

PROFIS Anchor (c) 2003-2009 Hilti AG, FL-9494 Schaan Hilti is a registered Trademark of Hilti AG, Schaan

4.3 Concrete edge failure in direction y+

$V_{cbg} = \left(\frac{A_{Vc}}{A_{Vc0}}\right) \psi_{ec,V}\, \psi_{ed,V}\, \psi_{c,V}\, \psi_{h,V}\, \psi_{parallel,V}\, V_b$ ACI 318-08 Eq. (D-22)

$\phi\ V_{cbg} \geq V_{ua}$ ACI 318-08 Eq. (D-2)

A_{Vc} see ACI 318-08, Part D.6.2.1, Fig. RD.6.2.1(b)

$A_{Vc0} = 4.5\, c_{a1}^2$ ACI 318-08 Eq. (D-23)

$\psi_{ec,V} = \left(\frac{1}{1 + \frac{2e_v'}{3c_{a1}}}\right) \leq 1.0$ ACI 318-08 Eq. (D-26)

$\psi_{ed,V} = 0.7 + 0.3\left(\frac{c_{a2}}{1.5c_{a1}}\right) \leq 1.0$ ACI 318-08 Eq. (D-28)

$\psi_{h,V} = \sqrt{\frac{1.5c_{a1}}{h_a}} \geq 1.0$ ACI 318-08 Eq. (D-29)

$V_b = \left(8\left(\frac{l_e}{d_a}\right)^{0.2} \sqrt{d_a}\right) \lambda\ \sqrt{f_c'}\, c_{a1}^{1.5}$ ACI 318-08 Eq. (D-25)

Variables

c_{a1} [in.]	c_{a2} [in.]	e_{cV} [in.]	$\psi_{c,V}$	h_a [in.]
8.000	-	0.000	1.000	60.000

l_e [in.]	λ	d_a [in.]	f_c' [psi]	$\psi_{parallel,V}$
4.000	1.000	0.500	4000	1.000

Calculations

A_{Vc} [in.^{2}]	A_{Vc0} [in.^{2}]	$\psi_{ec,V}$	$\psi_{ed,V}$	$\psi_{h,V}$	V_b [lb]
336.00	288.00	1.000	1.000	1.000	12270

Results

V_{cbg} [lb]	$\phi_{concrete}$	$\phi\ V_{cbg}$ [lb]	V_{ua} [lb]
14315	0.700	10021	544

5 Combined tension and shear loads

β_N	β_V	ζ	Utilization $\beta_{N,V}$ [%]	Status
0.417	0.054	5/3	25	OK

$\beta_{NV} = \beta_N^{\zeta} + \beta_V^{\zeta} <= 1$

6 Warnings

- Load re-distributions on the anchors due to elastic deformations of the anchor plate are not considered. The anchor plate is assumed to be sufficiently stiff, in order not to be deformed when subjected to the loading! Input data and results must be checked for agreement with the existing conditions and for plausibility!
- Condition A applies when supplementary reinforcement is used. The Φ factor is increased for non-steel Design Strengths except Pullout Strength and Pryout strength. Condition B applies when supplementary reinforcement is not used and for Pullout Strength and Pryout Strength. Refer to your local standard.
- Checking the transfer of loads into the base material and the shear resistance are required in accordance with ACI 318 or the relevant standard!

Fastening meets the design criteria!

PROFIS Anchor (c) 2003-2009 Hilti AG, FL-9494 Schaan Hilti is a registered Trademark of Hilti AG, Schaan

7 Installation data

Anchor plate, steel: ; E = 0 psi; f_{yk} = 35998 psi
Profile: Round HSS, Steel pipe (AISC); 2.880 x 2.880 x 0.203 in.
Hole diameter in the fixture: d_f = 0.563 in.
Plate thickness (input): 0.750 in.
Recommended plate thickness: calculated (0.039 in.)
Drilling method: Hammer drilled
Cleaning: No cleaning of the drilled hole is required

Anchor type and diameter: AWS D1.1 GR. B 1/2
Installation torque: -
Hole diameter in the base material: - in.
Hole depth in the base material: 6.000 in.
Minimum thickness of the base material: 6.813 in.

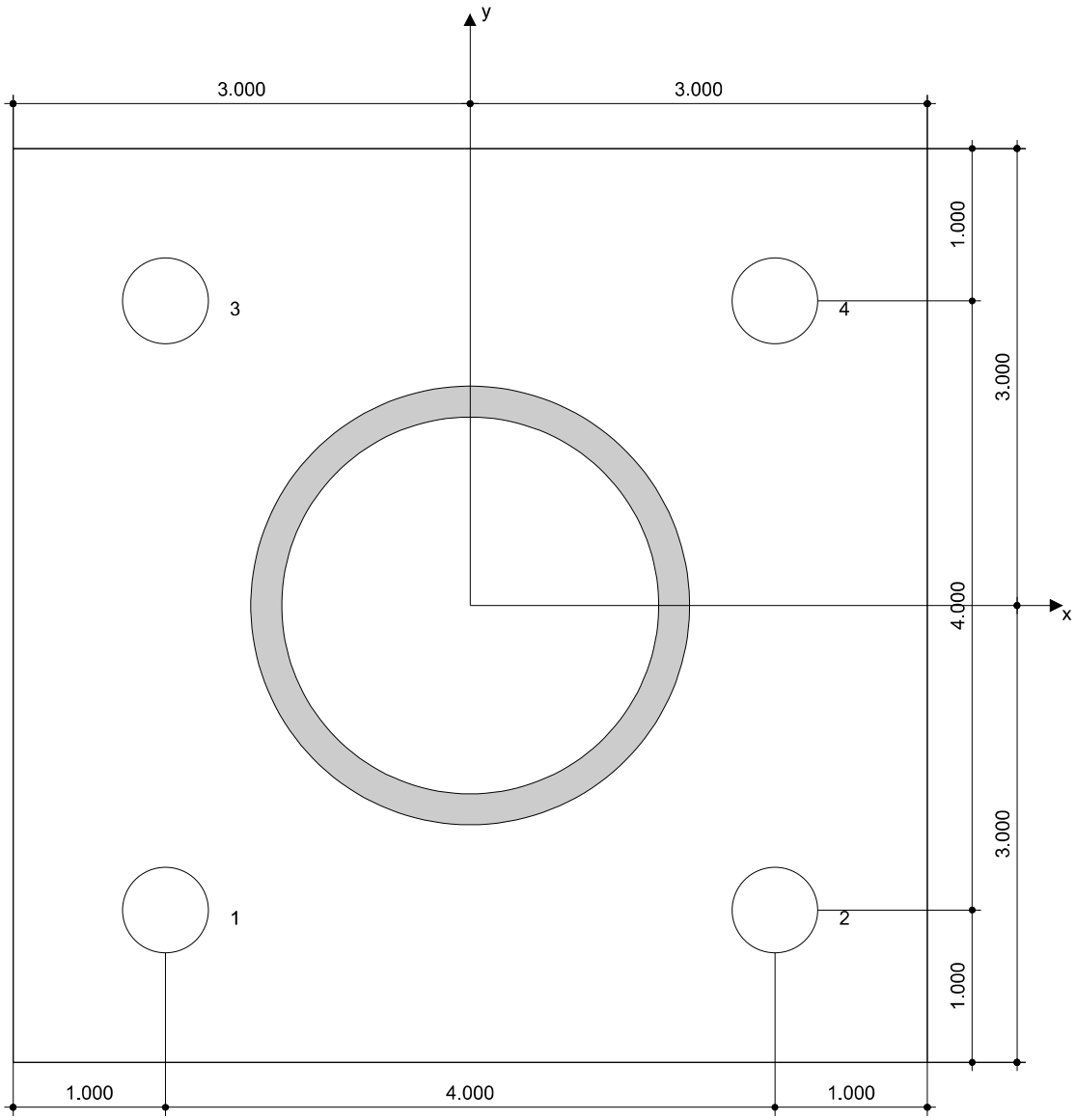

Coordinates Anchor in.

Anchor	x	y	c_{-x}	c_{+x}	c_{-y}	c_{+y}
1	-2.000	-2.000	-	-	4.000	8.000
2	2.000	-2.000	-	-	4.000	8.000
3	-2.000	2.000	-	-	8.000	4.000
4	2.000	2.000	-	-	8.000	4.000

PROFIS Anchor (c) 2003-2009 Hilti AG, FL-9494 Schaan Hilti is a registered Trademark of Hilti AG, Schaan

8 Remarks; Your Cooperation Duties

- Any and all information and data contained in the Software concern solely the use of Hilti products and are based on the principles, formulas and security regulations in accordance with Hilti's technical directions and operating, mounting and assembly instructions, etc., that must be strictly complied with by the user. All figures contained therein are average figures, and therefore use-specific tests are to be conducted prior to using the relevant Hilti product. The results of the calculations carried out by means of the Software are based essentially on the data you put in. Therefore, you bear the sole responsibility for the absence of errors, the completeness and the relevance of the data to be put in by you. Moreover, you bear sole responsibility for having the results of the calculation checked and cleared by an expert, particularly with regard to compliance with applicable norms and permits, prior to using them for your specific facility. The Software serves only as an aid to interpret norms and permits without any guarantee as to the absence of errors, the correctness and the relevance of the results or suitability for a specific application.
- You must take all necessary and reasonable steps to prevent or limit damage caused by the Software. In particular, you must arrange for the regular backup of programs and data and, if applicable, carry out the updates of the Software offered by Hilti on a regular basis. If you do not use the AutoUpdate function of the Software, you must ensure that you are using the current and thus up-to-date version of the Software in each case by carrying out manual updates via the Hilti Website. Hilti will not be liable for consequences, such as the recovery of lost or damaged data or programs, arising from a culpable breach of duty by you.

PROFIS Anchor (c) 2003-2009 Hilti AG, FL-9494 Schaan Hilti is a registered Trademark of Hilti AG, Schaan

Pole Footing Embedded in Soil

File = R:\New Projects\LRS\Quantico\Engineering\Enercalc\landscape design.ec6
ENERCALC, INC. 1983-2016, Build:6.16.6.7, Ver:6.16.6.7

Lic. # : KW-06000330 **Licensee : cvm engineers**

Description : Handrail Footing

Code References

Calculations per IBC 2012 1807.3, CBC 2013, ASCE 7-10
Load Combinations Used : ASCE 7-05

General Information

Pole Footing Shape	Circular
Pole Footing Diameter	16.0 in
Calculate Min. Depth for Allowable Pressures	
No Lateral Restraint at Ground Surface	
Allow Passive	250.0 pcf
Max Passive	1,500.0 psf

Controlling Values

Governing Load Combination : +D+L+H

Lateral Load	0.20 k
Moment	0.60 k-ft

NO Ground Surface Restraint

Pressures at 1/3 Depth

Actual	247.444 psf
Allowable	248.062 psf

Minimum Required Depth	3.0 ft

Footing Base Area	1.396 ft^2
Maximum Soil Pressure	0.0 ksf

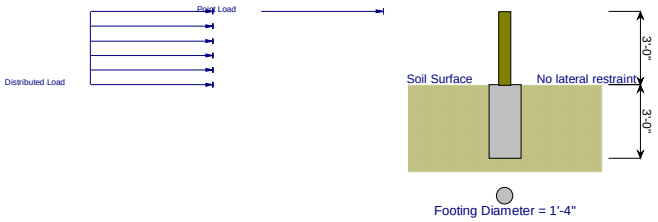

Applied Loads

Lateral Concentrated Load (k)		Lateral Distributed Loads (klf)		Vertical Load (k)
D : Dead Load	k		k/ft	k
Lr : Roof Live	k		k/ft	k
L : Live	0.20 k		k/ft	k
S : Snow	k		k/ft	k
W : Wind	k	0.0210	k/ft	k
E : Earthquake	k		k/ft	k
H : Lateral Earth	k		k/ft	k
Load distance above ground surface	3.0 ft	TOP of Load above ground surface 3.0	ft	
		BOTTOM of Load above ground surface	ft	

Load Combination Results

Load Combination	Forces @ Ground Surface Loads - (k)	Moments - (ft-k)	Required Depth - (ft)	Pressure at 1/3 Depth Actual - (psf)	Allow - (psf)	Soil Increase Factor
D Only	0.000	0.000	0.13	0.0	0.0	1.000
+D+L+H	0.200	0.600	3.00	247.4	248.1	1.000
+D+Lr+H	0.000	0.000	0.13	0.0	0.0	1.000
+D+S+H	0.000	0.000	0.13	0.0	0.0	1.000
+D+0.750Lr+0.750L+H	0.150	0.450	2.75	221.2	221.3	1.000
+D+0.750L+0.750S+H	0.150	0.450	2.75	221.2	221.3	1.000
+D+W+H	0.063	0.095	1.75	135.2	136.3	1.000
+D+0.70E+H	0.000	0.000	0.13	0.0	0.0	1.000
+D+0.750Lr+0.750L+0.750W+H	0.197	0.521	3.00	239.7	240.4	1.000

Description : Handrail Footing

+D+0.750L+0.750S+0.750W+H	0.197	0.521	3.00	239.7	240.4	1.000
+D+0.750Lr+0.750L+0.5250E+H	0.150	0.450	2.75	221.2	221.3	1.000
+D+0.750L+0.750S+0.5250E+H	0.150	0.450	2.75	221.2	221.3	1.000
+0.60D+W+H	0.063	0.095	1.75	135.2	136.3	1.000
+0.60D+0.70E+H	0.000	0.000	0.13	0.0	0.0	1.000

cvm
1002 West 9th Avenue, King Of Prussia, PA 19406
610-989-3800 610-989-3677 Fax

JOB QUANTICO
SHEET NO. ____ OF ____
CALCULATED BY KLA. DATE 4/29/16
CHECKED BY ____ DATE ____
SCALE BASKET BALL FDN.

PER SMITH FIELD PARK - Manufacturer's Provided Loads
- MAX. OVERTURNING MOMENT 12,240 #-FT
- MAX. SHEAR 540 #

PER IBC 2009 EQ. 18-3

$$d = \sqrt{\frac{4.25 M_g}{S_3 b}} = \sqrt{\frac{4.25\,(12{,}240\ \#\text{-FT})}{360\ \text{psf/ft}\,(3')}}$$

$d = 6.9$ FT. $+ 1.5$ FT

Per Geotech report - top 12 to 18" cannot resist passive pressures

$= 8.4$ FT.

Use 8'-0" embed

REINFORCEMENT

12 - #6 $A_s = 0.44(12) = 5.28\ \text{in}^2$

$\pi r^2 = \pi 18^2 = 1017.88\ \text{in}^2$

$\frac{5.28}{1017} \times 100 = 5.2\%$ OK ✓

Note: Football Goal Post Loads are similar use same design

Pole Footing Embedded in Soil

File = R:\New Projects\LRS\Quantico\Engineering\Enercalc\landscape design.ec6
ENERCALC, INC. 1983-2016, Build:6.16.6.7, Ver:6.16.6.7

Lic. # : KW-06000330 **Licensee : cvm engineers**

Description : Foul Poul

Code References

Calculations per IBC 2012 1807.3, CBC 2013, ASCE 7-10
Load Combinations Used : ASCE 7-05

General Information

Pole Footing Shape	Circular
Pole Footing Diameter	36.0 in
Calculate Min. Depth for Allowable Pressures	
No Lateral Restraint at Ground Surface	
Allow Passive	360.0 pcf
Max Passive	1,500.0 psf

Controlling Values

Governing Load Combination :	+D+W+H
Lateral Load	0.50 k
Moment	8.50 k-ft
NO Ground Surface Restraint	
Pressures at 1/3 Depth	
Actual	503.40 psf
Allowable	503.52 psf
Minimum Required Depth	**4.250 ft**
Footing Base Area	7.069 ft^2
Maximum Soil Pressure	0.0 ksf

Per Geotech report - top 12 to 18" cannot resist passive pressures - use 6'-0"

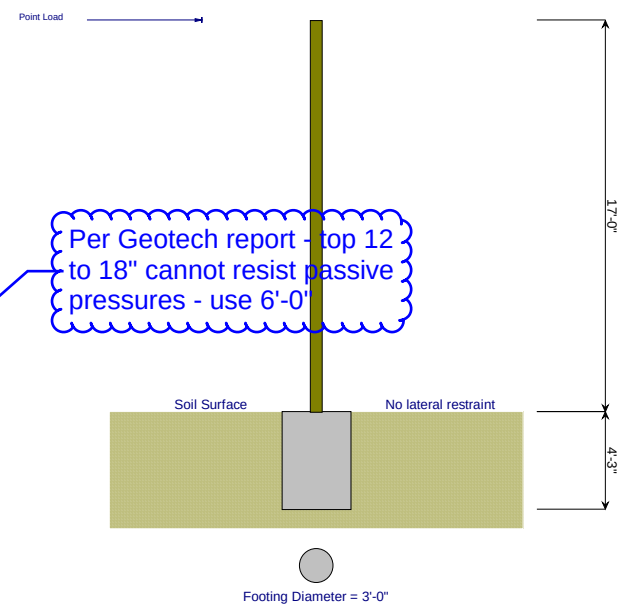

Applied Loads

Lateral Concentrated Load (k)		Lateral Distributed Loads (klf)		Vertical Load (k)
D : Dead Load	k		k/ft	k
Lr : Roof Live	k		k/ft	k
L : Live	k		k/ft	k
S : Snow	k		k/ft	k
W : Wind	0.50 k		k/ft	k
E : Earthquake	k		k/ft	k
H : Lateral Earth	k		k/ft	k
Load distance above ground surface	17.0 ft	TOP of Load above ground surface	ft	
		BOTTOM of Load above ground surface	ft	

Load Combination Results

Load Combination	Forces @ Ground Surface Loads - (k)	Moments - (ft-k)	Required Depth - (ft)	Pressure at 1/3 Depth Actual - (psf)	Allow - (psf)	Soil Increase Factor
D Only	0.000	0.000	0.13	0.0	0.0	1.000
+D+L+H	0.000	0.000	0.13	0.0	0.0	1.000
+D+Lr+H	0.000	0.000	0.13	0.0	0.0	1.000
+D+S+H	0.000	0.000	0.13	0.0	0.0	1.000
+D+0.750Lr+0.750L+H	0.000	0.000	0.13	0.0	0.0	1.000
+D+0.750L+0.750S+H	0.000	0.000	0.13	0.0	0.0	1.000
+D+W+H	0.500	8.500	4.25	503.4	503.5	1.000
+D+0.70E+H	0.000	0.000	0.13	0.0	0.0	1.000
+D+0.750Lr+0.750L+0.750W+H	0.375	6.375	3.88	452.6	455.9	1.000

Description : Foul Poul

+D+0.750L+0.750S+0.750W+H	0.375	6.375	3.88	452.6	455.9	1.000
+D+0.750Lr+0.750L+0.5250E+H	0.000	0.000	0.13	0.0	0.0	1.000
+D+0.750L+0.750S+0.5250E+H	0.000	0.000	0.13	0.0	0.0	1.000
+0.60D+W+H	0.500	8.500	4.25	503.4	503.5	1.000
+0.60D+0.70E+H	0.000	0.000	0.13	0.0	0.0	1.000

Pole Footing Embedded in Soil

File = R:\New Projects\LRS\Quantico\Engineering\Enercalc\landscape design.ec6
ENERCALC, INC. 1983-2016, Build:6.16.6.7, Ver:6.16.6.7

Lic. # : KW-06000330 **Licensee : cvm engineers**

Description : Flag Pole

Code References

Calculations per IBC 2012 1807.3, CBC 2013, ASCE 7-10
Load Combinations Used : ASCE 7-05

General Information

Pole Footing Shape	Circular
Pole Footing Diameter	24.0 in
Calculate Min. Depth for Allowable Pressures	
Lateral Restraint at Ground Surface	
Allow Passive	360.0 pcf
Max Passive	1,500.0 psf

Controlling Values

Governing Load Combination : +D+W+H

Lateral Load	0.70 k
Moment	19.250 k-ft
Restraint @ Ground Surface	
Pressure at Depth	
Actual	1,484.13 psf
Allowable	1,500.0 psf
Surface Retraint Force	8,491.67 lbs
Minimum Required Depth	**5.250 ft**
Footing Base Area	3.142 ft^2
Maximum Soil Pressure	0.0 ksf

Per Geotech report - top 12 to 18" cannot resist passive pressures - use 7'-0"

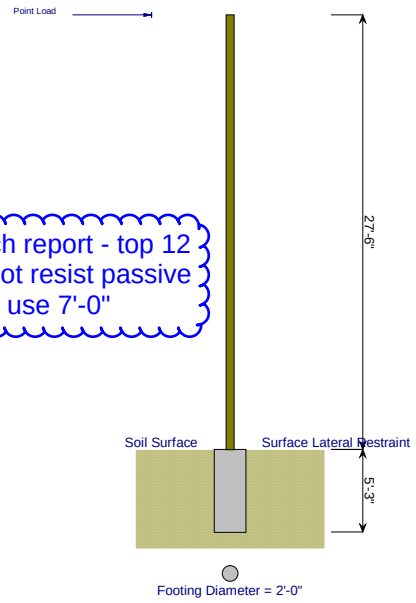

Applied Loads

Lateral Concentrated Load (k)		Lateral Distributed Loads (klf)	Applied Moment (kft)	Vertical Load (k)
D : Dead Load	k	k/ft	k-ft	k
Lr : Roof Live	k	k/ft	k-ft	k
L : Live	k	k/ft	k-ft	k
S : Snow	k	k/ft	k-ft	k
W : Wind	0.70 k	k/ft	k-ft	k
E : Earthquake	k	k/ft	k-ft	k
H : Lateral Earth	k	k/ft	k-ft	k
Load distance above ground surface	27.50 ft	TOP of Load above ground surface ft		
		BOTTOM of Load above ground surface ft		

Load Combination Results

Load Combination	Forces @ Ground Surface Loads - (k)	Moments - (ft-k)	Required Depth - (ft)	Pressure at Depth Actual - (psf)	Allow - (psf)	Soil Increase Factor
D Only	0.000	0.000	0.13	0.0	45.0	1.000
+D+L+H	0.000	0.000	0.13	0.0	45.0	1.000
+D+Lr+H	0.000	0.000	0.13	0.0	45.0	1.000
+D+S+H	0.000	0.000	0.13	0.0	45.0	1.000
+D+0.750Lr+0.750L+H	0.000	0.000	0.13	0.0	45.0	1.000
+D+0.750L+0.750S+H	0.000	0.000	0.13	0.0	45.0	1.000
+D+W+H	0.700	19.250	5.25	1,484.1	1,500.0	1.000
+D+0.70E+H	0.000	0.000	0.13	0.0	45.0	1.000
+D+0.750Lr+0.750L+0.750W+H	0.525	14.438	4.63	1,434.3	1,500.0	1.000

Description : Flag Pole

+D+0.750L+0.750S+0.750W+H	0.525	14.438	4.63	1,434.3	1,500.0	1.000
+D+0.750Lr+0.750L+0.5250E+H	0.000	0.000	0.13	0.0	45.0	1.000
+D+0.750L+0.750S+0.5250E+H	0.000	0.000	0.13	0.0	45.0	1.000
+0.60D+W+H	0.700	19.250	5.25	1,484.1	1,500.0	1.000
+0.60D+0.70E+H	0.000	0.000	0.13	0.0	45.0	1.000

Pole Footing Embedded in Soil

File = R:\New Projects\LRS\Quantico\Engineering\Enercalc\landscape design.ec6
ENERCALC, INC. 1983-2016, Build:6.16.6.7, Ver:6.16.6.7

Lic. # : KW-06000330 **Licensee : cvm engineers**

Description : Elec. Scoreboard

Code References

Calculations per IBC 2012 1807.3, CBC 2013, ASCE 7-10
Load Combinations Used : ASCE 7-05

General Information

Pole Footing Shape	Circular	
Pole Footing Diameter	48.0	in
Calculate Min. Depth for Allowable Pressures		
No Lateral Restraint at Ground Surface		
Allow Passive	360.0	pcf
Max Passive	1,500.0	psf

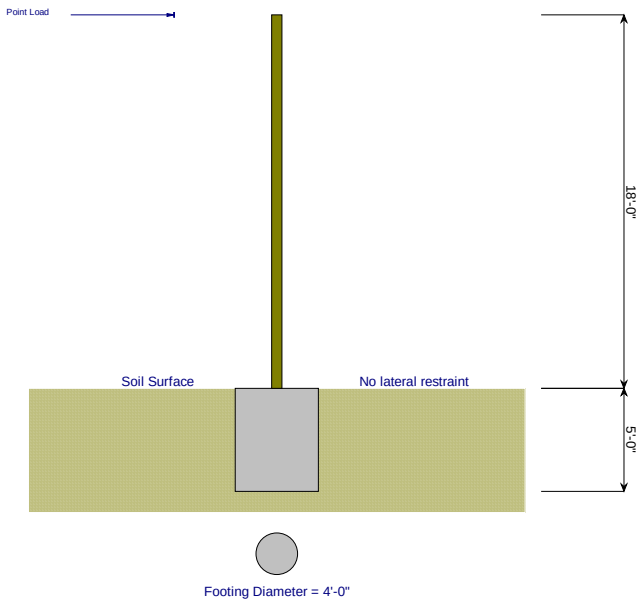

Controlling Values

Governing Load Combination : +D+W+H

Lateral Load	1.0	k
Moment	18.0	k-ft

NO Ground Surface Restraint

Pressures at 1/3 Depth

Actual	591.26	psf
Allowable	591.40	psf

Minimum Required Depth	5.0	ft

Footing Base Area	12.566	ft^2
Maximum Soil Pressure	0.0	ksf

Applied Loads

Lateral Concentrated Load (k)			Lateral Distributed Loads (klf)		Vertical Load (k)
D : Dead Load		k		k/ft	k
Lr : Roof Live		k		k/ft	k
L : Live		k		k/ft	k
S : Snow		k		k/ft	k
W : Wind	1.0	k		k/ft	k
E : Earthquake		k		k/ft	k
H : Lateral Earth		k		k/ft	k
Load distance above ground surface	18.0	ft	TOP of Load above ground surface	ft	
			BOTTOM of Load above ground surface	ft	

Load Combination Results

Load Combination	Forces @ Ground Surface Loads - (k)	Moments - (ft-k)	Required Depth - (ft)	Pressure at 1/3 Depth Actual - (psf)	Allow - (psf)	Soil Increase Factor
D Only	0.000	0.000	0.13	0.0	0.0	1.000
+D+L+H	0.000	0.000	0.13	0.0	0.0	1.000
+D+Lr+H	0.000	0.000	0.13	0.0	0.0	1.000
+D+S+H	0.000	0.000	0.13	0.0	0.0	1.000
+D+0.750Lr+0.750L+H	0.000	0.000	0.13	0.0	0.0	1.000
+D+0.750L+0.750S+H	0.000	0.000	0.13	0.0	0.0	1.000
+D+W+H	1.000	18.000	5.00	591.3	591.4	1.000
+D+0.70E+H	0.000	0.000	0.13	0.0	0.0	1.000
+D+0.750Lr+0.750L+0.750W+H	0.750	13.500	4.50	533.4	533.9	1.000

+D+0.750L+0.750S+0.750W+H	0.750	13.500	4.50	533.4	533.9	1.000
+D+0.750Lr+0.750L+0.5250E+H	0.000	0.000	0.13	0.0	0.0	1.000
+D+0.750L+0.750S+0.5250E+H	0.000	0.000	0.13	0.0	0.0	1.000
+0.60D+W+H	1.000	18.000	5.00	591.3	591.4	1.000
+0.60D+0.70E+H	0.000	0.000	0.13	0.0	0.0	1.000

Pole Footing Embedded in Soil

File = R:\New Projects\LRS\Quantico\Engineering\Enercalc\landscape design.ec6
ENERCALC, INC. 1983-2016, Build:6.16.6.7, Ver:6.16.6.7

Lic. # : KW-06000330 **Licensee : cvm engineers**

Description : Manual Scoreboard

Code References

Calculations per IBC 2012 1807.3, CBC 2013, ASCE 7-10
Load Combinations Used : ASCE 7-05

General Information

Pole Footing Shape	Circular
Pole Footing Diameter	36.0 in
Calculate Min. Depth for Allowable Pressures	
No Lateral Restraint at Ground Surface	
Allow Passive	360.0 pcf
Max Passive	1,500.0 psf

Per Geotech report - top 12 to 18" cannot resist passive pressures - use 6'-0"

Controlling Values

Governing Load Combination :	+D+W+H
Lateral Load	1.0 k
Moment	8.0 k-ft
NO Ground Surface Restraint	
Pressures at 1/3 Depth	
Actual	527.80 psf
Allowable	528.48 psf
Minimum Required Depth	**4.50 ft**
Footing Base Area	7.069 ft^2
Maximum Soil Pressure	0.0 ksf

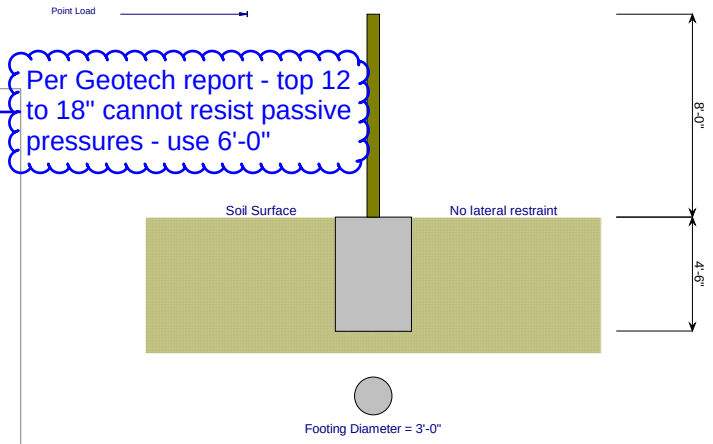

Applied Loads

Lateral Concentrated Load (k)		Lateral Distributed Loads (klf)		Vertical Load (k)
D : Dead Load	k		k/ft	k
Lr : Roof Live	k		k/ft	k
L : Live	k		k/ft	k
S : Snow	k		k/ft	k
W : Wind	1.0 k		k/ft	k
E : Earthquake	k		k/ft	k
H : Lateral Earth	k		k/ft	k
Load distance above ground surface	8.0 ft	TOP of Load above ground surface	ft	
		BOTTOM of Load above ground surface	ft	

Load Combination Results

Load Combination	Forces @ Ground Surface Loads - (k)	Moments - (ft-k)	Required Depth - (ft)	Pressure at 1/3 Depth Actual - (psf)	Allow - (psf)	Soil Increase Factor
D Only	0.000	0.000	0.13	0.0	0.0	1.000
+D+L+H	0.000	0.000	0.13	0.0	0.0	1.000
+D+Lr+H	0.000	0.000	0.13	0.0	0.0	1.000
+D+S+H	0.000	0.000	0.13	0.0	0.0	1.000
+D+0.750Lr+0.750L+H	0.000	0.000	0.13	0.0	0.0	1.000
+D+0.750L+0.750S+H	0.000	0.000	0.13	0.0	0.0	1.000
+D+W+H	1.000	8.000	4.50	527.8	528.5	1.000
+D+0.70E+H	0.000	0.000	0.13	0.0	0.0	1.000
+D+0.750Lr+0.750L+0.750W+H	0.750	6.000	4.00	473.9	474.7	1.000

Description : Manual Scoreboard

+D+0.750L+0.750S+0.750W+H	0.750	6.000	4.00	473.9	474.7	1.000
+D+0.750Lr+0.750L+0.5250E+H	0.000	0.000	0.13	0.0	0.0	1.000
+D+0.750L+0.750S+0.5250E+H	0.000	0.000	0.13	0.0	0.0	1.000
+0.60D+W+H	1.000	8.000	4.50	527.8	528.5	1.000
+0.60D+0.70E+H	0.000	0.000	0.13	0.0	0.0	1.000

Loads per Chain Link Fence Wind Load Guide for the Selection of Line Post and Line Post Spacing - by Chain Link Fence Manufacturers Institute, dated June 2014.
note loads per 2" mesh

Pole Footing Embedded in Soil

File = R:\New Projects\LRS\Quantico\Engineering\Enercalc\landscape design.ec6
ENERCALC, INC. 1983-2016, Build:6.16.6.7, Ver:6.16.6.7

Lic. # : KW-06000330 **Licensee : cvm engineers**

Description : 4 Foot Fence - load calc'd per guide

Code References

Calculations per IBC 2012 1807.3, CBC 2013, ASCE 7-10
Load Combinations Used : ASCE 7-05

General Information

Pole Footing Shape	Circular
Pole Footing Diameter	20.0 in
Calculate Min. Depth for Allowable Pressures	
No Lateral Restraint at Ground Surface	
Allow Passive	360.0 pcf
Max Passive	1,500.0 psf

Controlling Values

Governing Load Combination : +D+W+H

Lateral Load	0.30 k
Moment	1.050 k-ft

NO Ground Surface Restraint

Pressures at 1/3 Depth

Actual	342.366 psf
Allowable	344.065 psf

Minimum Required Depth	2.875 ft

Footing Base Area	2.182 ft^2
Maximum Soil Pressure	0.0 ksf

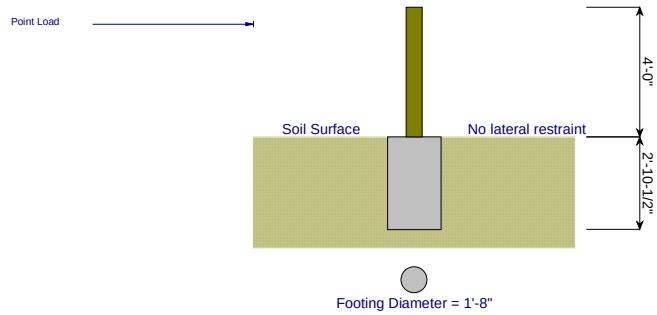

Per Geotech report - top 12 to 18" cannot resist passive pressures - use 4'-6"

Applied Loads

Lateral Concentrated Load (k)		Lateral Distributed Loads (klf)		Vertical Load (k)
D : Dead Load	k		k/ft	k
Lr : Roof Live	k		k/ft	k
L : Live	k		k/ft	k
S : Snow	k		k/ft	k
W : Wind	0.30 k		k/ft	k
E : Earthquake	k		k/ft	k
H : Lateral Earth	k		k/ft	k
Load distance above ground surface	3.50 ft	TOP of Load above ground surface 4.0	ft	
		BOTTOM of Load above ground surface	ft	

Load Combination Results

Load Combination	Forces @ Ground Surface Loads - (k)	Moments - (ft-k)	Required Depth - (ft)	Pressure at 1/3 Depth Actual - (psf)	Allow - (psf)	Soil Increase Factor
D Only	0.000	0.000	0.13	0.0	0.0	1.000
+D+L+H	0.000	0.000	0.13	0.0	0.0	1.000
+D+Lr+H	0.000	0.000	0.13	0.0	0.0	1.000
+D+S+H	0.000	0.000	0.13	0.0	0.0	1.000
+D+0.750Lr+0.750L+H	0.000	0.000	0.13	0.0	0.0	1.000
+D+0.750L+0.750S+H	0.000	0.000	0.13	0.0	0.0	1.000
+D+W+H	0.300	1.050	2.88	342.4	344.1	1.000
+D+0.70E+H	0.000	0.000	0.13	0.0	0.0	1.000
+D+0.750Lr+0.750L+0.750W+H	0.225	0.788	2.63	305.6	308.2	1.000

Description : 4 Foot Fence - load calc'd per guide

+D+0.750L+0.750S+0.750W+H	0.225	0.788	2.63	305.6	308.2	1.000
+D+0.750Lr+0.750L+0.5250E+H	0.000	0.000	0.13	0.0	0.0	1.000
+D+0.750L+0.750S+0.5250E+H	0.000	0.000	0.13	0.0	0.0	1.000
+0.60D+W+H	0.300	1.050	2.88	342.4	344.1	1.000
+0.60D+0.70E+H	0.000	0.000	0.13	0.0	0.0	1.000

Loads per Chain Link Fence Wind Load Guide for the Selection of Line Post and Line Post Spacing - by Chain Link Fence Manufacturers Institute, dated June 2014.
note loads per 2" mesh

Pole Footing Embedded in Soil

File = R:\New Projects\LRS\Quantico\Engineering\Enercalc\landscape design.ec6
ENERCALC, INC. 1983-2016, Build:6.16.6.7, Ver:6.16.6.7

Lic. # : KW-06000330 **Licensee : cvm engineers**

Description : 6 Foot Fence - with loads calc'd per guide

Code References

Calculations per IBC 2012 1807.3, CBC 2013, ASCE 7-10
Load Combinations Used : ASCE 7-05

General Information

Pole Footing Shape	Circular
Pole Footing Diameter	20.0 in
Calculate Min. Depth for Allowable Pressures	
No Lateral Restraint at Ground Surface	
Allow Passive	360.0 pcf
Max Passive	1,500.0 psf

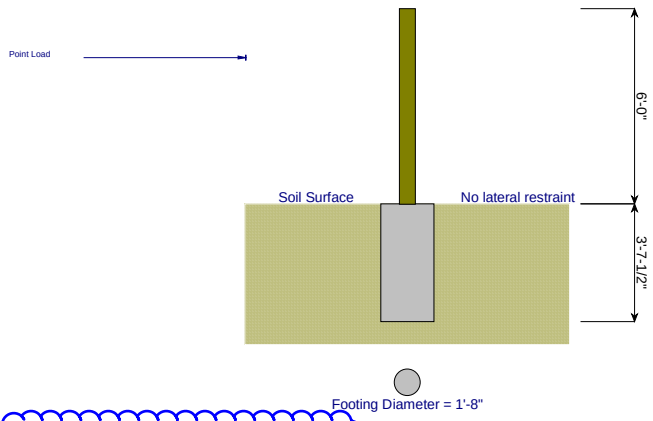

Controlling Values

Governing Load Combination : +D+W+H

Lateral Load	0.450 k
Moment	2.025 k-ft

NO Ground Surface Restraint

Pressures at 1/3 Depth

Actual	424.155 psf
Allowable	425.821 psf

Minimum Required Depth	3.625 ft

Footing Base Area	2.182 ft^2
Maximum Soil Pressure	0.0 ksf

Per Geotech report - top 12 to 18" cannot resist passive pressures - use 5'-6"

Applied Loads

Lateral Concentrated Load (k)		Lateral Distributed Loads (klf)		Vertical Load (k)
D : Dead Load	k		k/ft	k
Lr : Roof Live	k		k/ft	k
L : Live	k		k/ft	k
S : Snow	k		k/ft	k
W : Wind	0.450 k		k/ft	k
E : Earthquake	k		k/ft	k
H : Lateral Earth	k		k/ft	k
Load distance above ground surface	4.50 ft	TOP of Load above ground surface 6.0	ft	
		BOTTOM of Load above ground surface	ft	

Load Combination Results

Load Combination	Forces @ Ground Surface Loads - (k)	Moments - (ft-k)	Required Depth - (ft)	Pressure at 1/3 Depth Actual - (psf)	Allow - (psf)	Soil Increase Factor
D Only	0.000	0.000	0.13	0.0	0.0	1.000
+D+L+H	0.000	0.000	0.13	0.0	0.0	1.000
+D+Lr+H	0.000	0.000	0.13	0.0	0.0	1.000
+D+S+H	0.000	0.000	0.13	0.0	0.0	1.000
+D+0.750Lr+0.750L+H	0.000	0.000	0.13	0.0	0.0	1.000
+D+0.750L+0.750S+H	0.000	0.000	0.13	0.0	0.0	1.000
+D+W+H	0.450	2.025	3.63	424.2	425.8	1.000
+D+0.70E+H	0.000	0.000	0.13	0.0	0.0	1.000
+D+0.750Lr+0.750L+0.750W+H	0.338	1.519	3.25	380.2	380.8	1.000

+D+0.750L+0.750S+0.750W+H	0.338	1.519	3.25	380.2	380.8	1.000
+D+0.750Lr+0.750L+0.5250E+H	0.000	0.000	0.13	0.0	0.0	1.000
+D+0.750L+0.750S+0.5250E+H	0.000	0.000	0.13	0.0	0.0	1.000
+0.60D+W+H	0.450	2.025	3.63	424.2	425.8	1.000
+0.60D+0.70E+H	0.000	0.000	0.13	0.0	0.0	1.000

Loads per Chain Link Fence Wind Load Guide for the Selection of Line Post and Line Post Spacing - by Chain Link Fence Manufacturers Institute, dated June 2014.
note loads per 2" mesh

Pole Footing Embedded in Soil

File = R:\New Projects\LRS\Quantico\Engineering\Enercalc\landscape design.ec6
ENERCALC, INC. 1983-2016, Build:6.16.6.7, Ver:6.16.6.7

Lic. # : KW-06000330 **Licensee : cvm engineers**

Description : 8 Foot Fence - with loads calc'd per guide

Code References

Calculations per IBC 2012 1807.3, CBC 2013, ASCE 7-10
Load Combinations Used : ASCE 7-05

General Information

Pole Footing Shape	Circular
Pole Footing Diameter	30.0 in
Calculate Min. Depth for Allowable Pressures	
No Lateral Restraint at Ground Surface	
Allow Passive	360.0 pcf
Max Passive	1,500.0 psf

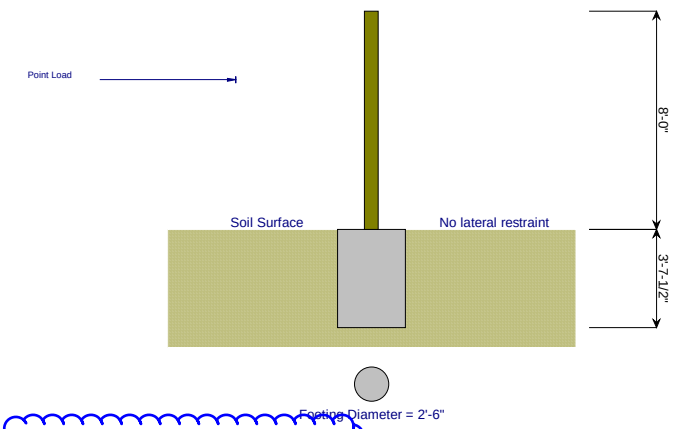

Controlling Values

Governing Load Combination : +D+W+H

Lateral Load	0.60 k
Moment	3.30 k-ft

NO Ground Surface Restraint

Pressures at 1/3 Depth

Actual	425.437 psf
Allowable	425.947 psf

Minimum Required Depth	3.625 ft

Footing Base Area	4.909 ft^2
Maximum Soil Pressure	0.0 ksf

Per Geotech report - top 12 to 18" cannot resist passive pressures - use 5'-6"

Applied Loads

Lateral Concentrated Load (k)			Lateral Distributed Loads (klf)		Vertical Load (k)
D : Dead Load		k		k/ft	k
Lr : Roof Live		k		k/ft	k
L : Live		k		k/ft	k
S : Snow		k		k/ft	k
W : Wind	0.60	k		k/ft	k
E : Earthquake		k		k/ft	k
H : Lateral Earth		k		k/ft	k
Load distance above ground surface	5.50	ft	TOP of Load above ground surface 8.0	ft	
			BOTTOM of Load above ground surface	ft	

Load Combination Results

Load Combination	Forces @ Ground Surface Loads - (k)	Moments - (ft-k)	Required Depth - (ft)	Pressure at 1/3 Depth Actual - (psf)	Allow - (psf)	Soil Increase Factor
D Only	0.000	0.000	0.13	0.0	0.0	1.000
+D+L+H	0.000	0.000	0.13	0.0	0.0	1.000
+D+Lr+H	0.000	0.000	0.13	0.0	0.0	1.000
+D+S+H	0.000	0.000	0.13	0.0	0.0	1.000
+D+0.750Lr+0.750L+H	0.000	0.000	0.13	0.0	0.0	1.000
+D+0.750L+0.750S+H	0.000	0.000	0.13	0.0	0.0	1.000
+D+W+H	0.600	3.300	3.63	425.4	425.9	1.000
+D+0.70E+H	0.000	0.000	0.13	0.0	0.0	1.000
+D+0.750Lr+0.750L+0.750W+H	0.450	2.475	3.25	379.9	382.9	1.000

Description : 8 Foot Fence - with loads calc'd per guide

+D+0.750L+0.750S+0.750W+H	0.450	2.475	3.25	379.9	382.9	1.000
+D+0.750Lr+0.750L+0.5250E+H	0.000	0.000	0.13	0.0	0.0	1.000
+D+0.750L+0.750S+0.5250E+H	0.000	0.000	0.13	0.0	0.0	1.000
+0.60D+W+H	0.600	3.300	3.63	425.4	425.9	1.000
+0.60D+0.70E+H	0.000	0.000	0.13	0.0	0.0	1.000

Loads per Chain Link Fence Wind Load Guide for the Selection of Line Post and Line Post Spacing - by Chain Link Fence Manufacturers Institute, dated June 2014.
note loads per 2" mesh

Pole Footing Embedded in Soil

File = R:\New Projects\LRS\Quantico\Engineering\Enercalc\landscape design.ec6
ENERCALC, INC. 1983-2016, Build:6.16.6.7, Ver:6.16.6.7

Lic. # : KW-06000330 **Licensee : cvm engineers**

Description : 16 Foot Fence - with loads calc'd per guide

Code References

Calculations per IBC 2012 1807.3, CBC 2013, ASCE 7-10
Load Combinations Used : ASCE 7-05

General Information

Pole Footing Shape	Circular
Pole Footing Diameter	30.0 in
Calculate Min. Depth for Allowable Pressures	
No Lateral Restraint at Ground Surface	
Allow Passive	360.0 pcf
Max Passive	1,500.0 psf

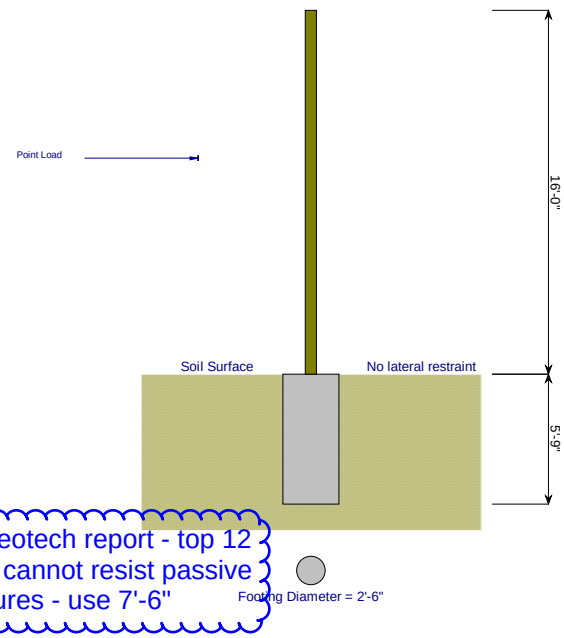

Controlling Values

Governing Load Combination : +D+W+H

Lateral Load	1.50 k
Moment	14.250 k-ft
NO Ground Surface Restraint	
Pressures at 1/3 Depth	
Actual	686.05 psf
Allowable	688.68 psf
Minimum Required Depth	**5.750 ft**
Footing Base Area	4.909 ft^2
Maximum Soil Pressure	0.0 ksf

Per Geotech report - top 12 to 18" cannot resist passive pressures - use 7'-6"

Applied Loads

Lateral Concentrated Load (k)		Lateral Distributed Loads (klf)		Vertical Load (k)
D : Dead Load	k		k/ft	k
Lr : Roof Live	k		k/ft	k
L : Live	k		k/ft	k
S : Snow	k		k/ft	k
W : Wind	1.50 k		k/ft	k
E : Earthquake	k		k/ft	k
H : Lateral Earth	k		k/ft	k
Load distance above ground surface	9.50 ft	TOP of Load above ground surface 16.0	ft	
		BOTTOM of Load above ground surface	ft	

Load Combination Results

Load Combination	Forces @ Ground Surface Loads - (k)	Moments - (ft-k)	Required Depth - (ft)	Pressure at 1/3 Depth Actual - (psf)	Allow - (psf)	Soil Increase Factor
D Only	0.000	0.000	0.13	0.0	0.0	1.000
+D+L+H	0.000	0.000	0.13	0.0	0.0	1.000
+D+Lr+H	0.000	0.000	0.13	0.0	0.0	1.000
+D+S+H	0.000	0.000	0.13	0.0	0.0	1.000
+D+0.750Lr+0.750L+H	0.000	0.000	0.13	0.0	0.0	1.000
+D+0.750L+0.750S+H	0.000	0.000	0.13	0.0	0.0	1.000
+D+W+H	1.500	14.250	5.75	686.1	688.7	1.000
+D+0.70E+H	0.000	0.000	0.13	0.0	0.0	1.000
+D+0.750Lr+0.750L+0.750W+H	1.125	10.688	5.25	615.8	617.9	1.000

Description : 16 Foot Fence - with loads calc'd per guide

+D+0.750L+0.750S+0.750W+H	1.125	10.688	5.25	615.8	617.9	1.000
+D+0.750Lr+0.750L+0.5250E+H	0.000	0.000	0.13	0.0	0.0	1.000
+D+0.750L+0.750S+0.5250E+H	0.000	0.000	0.13	0.0	0.0	1.000
+0.60D+W+H	1.500	14.250	5.75	686.1	688.7	1.000
+0.60D+0.70E+H	0.000	0.000	0.13	0.0	0.0	1.000

Pole Footing Embedded in Soil

File = R:\New Projects\LRS\Quantico\Engineering\Enercalc\landscape design.ec6
ENERCALC, INC. 1983-2016, Build:6.16.6.7, Ver:6.16.6.7

Lic. # : KW-06000330 **Licensee : cvm engineers**

Description : Wood Guide Rail Footing

Code References

Calculations per IBC 2012 1807.3, CBC 2013, ASCE 7-10
Load Combinations Used : ASCE 7-05

General Information

Pole Footing Shape	Circular	
Pole Footing Diameter	36.0	in
Calculate Min. Depth for Allowable Pressures		
No Lateral Restraint at Ground Surface		
Allow Passive	360.0	pcf
Max Passive	1,500.0	psf

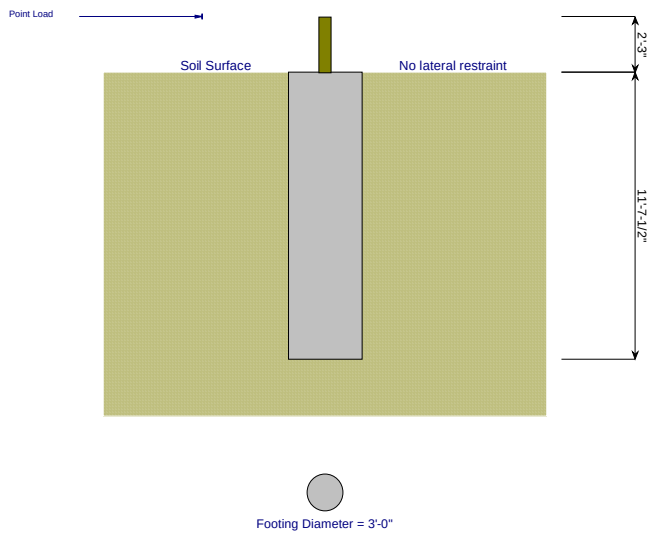

Controlling Values

Governing Load Combination : +D+L+H

Lateral Load	17.0	k
Moment	38.250	k-ft

NO Ground Surface Restraint

Pressures at 1/3 Depth

Actual	1,388.54	psf
Allowable	1,388.79	psf

Minimum Required Depth	11.625	ft

Footing Base Area	7.069	ft^2
Maximum Soil Pressure	0.0	ksf

Applied Loads

Lateral Concentrated Load (k)			Lateral Distributed Loads (klf)		Vertical Load (k)
D : Dead Load		k		k/ft	k
Lr : Roof Live		k		k/ft	k
L : Live	17.0	k		k/ft	k
S : Snow		k		k/ft	k
W : Wind		k		k/ft	k
E : Earthquake		k		k/ft	k
H : Lateral Earth		k		k/ft	k
Load distance above ground surface	2.250	ft	TOP of Load above ground surface	ft	
			BOTTOM of Load above ground surface	ft	

Load Combination Results

Load Combination	Forces @ Ground Surface Loads - (k)	Moments - (ft-k)	Required Depth - (ft)	Pressure at 1/3 Depth Actual - (psf)	Allow - (psf)	Soil Increase Factor
D Only	0.000	0.000	0.13	0.0	0.0	1.000
+D+L+H	17.000	38.250	11.63	1,388.5	1,388.8	1.000
+D+Lr+H	0.000	0.000	0.13	0.0	0.0	1.000
+D+S+H	0.000	0.000	0.13	0.0	0.0	1.000
+D+0.750Lr+0.750L+H	12.750	28.688	10.25	1,217.0	1,217.6	1.000
+D+0.750L+0.750S+H	12.750	28.688	10.25	1,217.0	1,217.6	1.000
+D+W+H	0.000	0.000	0.13	0.0	0.0	1.000
+D+0.70E+H	0.000	0.000	0.13	0.0	0.0	1.000
+D+0.750Lr+0.750L+0.750W+H	12.750	28.688	10.25	1,217.0	1,217.6	1.000

+D+0.750L+0.750S+0.750W+H	12.750	28.688	10.25	1,217.0	1,217.6	1.000
+D+0.750Lr+0.750L+0.5250E+H	12.750	28.688	10.25	1,217.0	1,217.6	1.000
+D+0.750L+0.750S+0.5250E+H	12.750	28.688	10.25	1,217.0	1,217.6	1.000
+0.60D+W+H	0.000	0.000	0.13	0.0	0.0	1.000
+0.60D+0.70E+H	0.000	0.000	0.13	0.0	0.0	1.000

cvm
1002 West 9th Avenue, King Of Prussia, PA 19406
610-989-3800 610-989-3677 Fax

JOB QUANTILO
SHEET NO. ____ OF ____
CALCULATED BY KLA. DATE 4/29
CHECKED BY ____ DATE ____
SCALE BLEACHER/PRESS BOX

PRESS BOX

ROOF: 25 PSF DL
60 PSF LL
20 PSF SL
AREA: 8' x 30'

FLOOR: 25 PSF DL
100 PSF LL
AREA: 8' x 30'

≅ APPROX. 5 K PER POST
(12 POST LOCS.)

PER STRUCT. MAG. ARTICLE
50pci SOIL ; 4000 PSI CONC. ; 10" BP
CAPACITY = 40 KIPS.
OK ✓.

cvm
1002 West 9th Avenue, King Of Prussia, PA 19406
610-989-3800 610-989-3677 Fax

JOB QUANTICO
SHEET NO. 1 OF
CALCULATED BY KLA DATE 7/21/16
CHECKED BY DATE
SCALE SOFTBALL NAME @ POST

PER % CLOSED DOCUMENT:

2" MESH 9 GAUGE = 14% CLOSED

= 86% OPEN.

EFFECTIVE TRIB. AREA

10' POST SPAC. X 16' TALL = 160 FT²

$$0.2(160) = \frac{32 \text{ FT}^2}{16'}$$

∴ EFFECTIVE WIDTH TO POSTS

= 2 FEET

WIND LOADING

$$q = 0.00256 K_d K_{zt} K_z V^2 I$$

$$= 0.00256(0.85)(1.0)(0.85)(90^2)(1.0)$$

$$= 15 \text{ PSF}$$

$K_d = 0.85$ [TB 6-4]

$K_z = 0.85$ [TB 6.3] EXP. C; 0.15 FT.

$$W = 1.6(15 \text{ PSF})(2') = 48 \text{ PSF}$$

∴ USE 50 PSF ON POST/FENCE

cvm
1002 West 9th Avenue, King Of Prussia, PA 19406
610-989-3800 610-989-3677 Fax

JOB
SHEET NO. 2. OF
CALCULATED BY DATE
CHECKED BY DATE
SCALE

• ASSUME POLE = 6 5/8" ϕ @ POSTS WALL = 24'
& @ TYP. WALL t = 12"

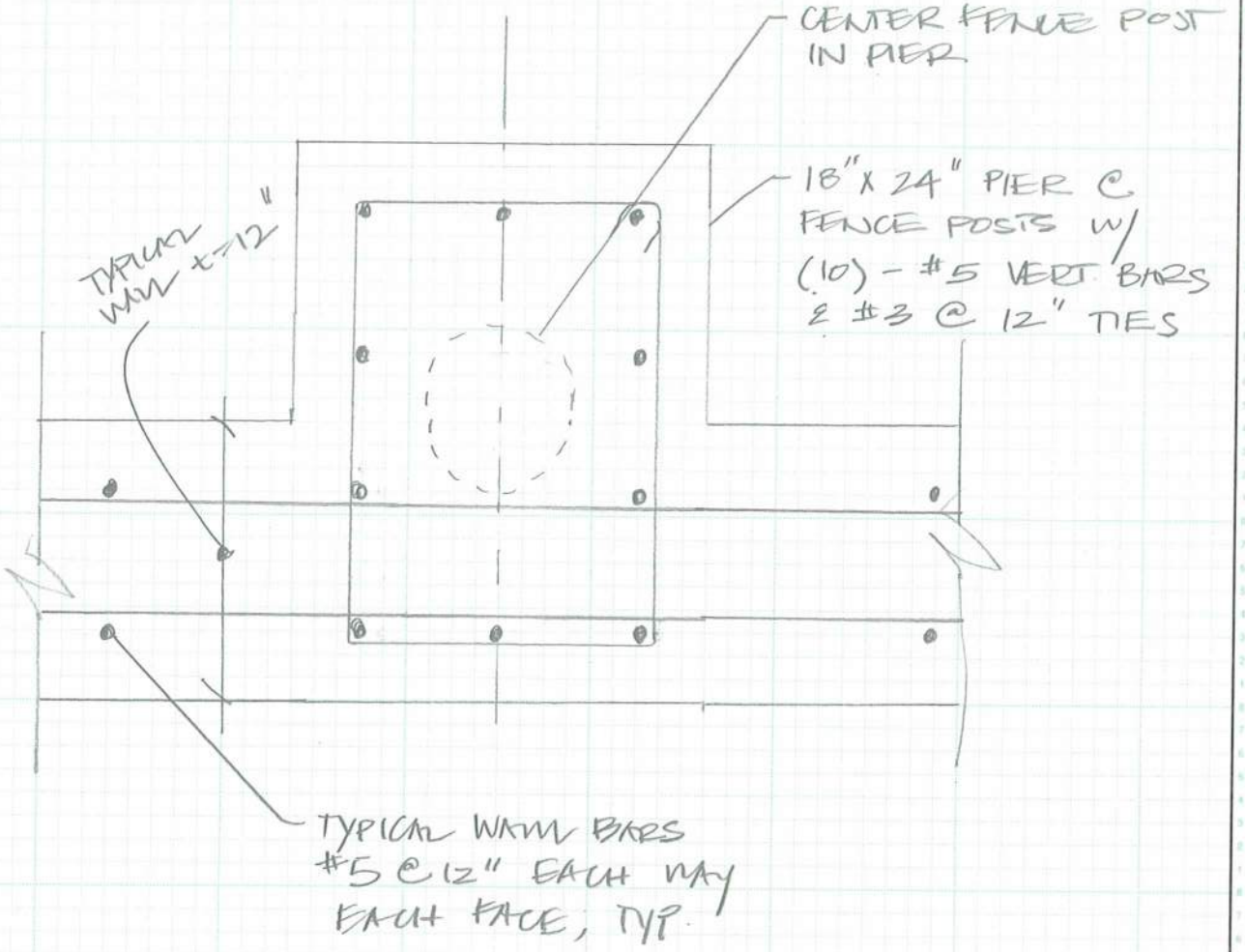

Wheatland Tube
JMC STEEL GROUP

Chain Link Fabric Percentage of Closure								
Finished Wire OD		Chain Link Fabric Mesh Size						
Gauge	Inch	3/8"	1/2"	5/8"	1"	1 1/4"	1 3/4"	2"
5	0.207				34.25%	28.41%	21.14%	18.76%
6	0.192				30.30%	26.67%	19.76%	17.51%
8	0.162				27.93%	22.94%	16.98%	14.99%
9	0.148	56.50%	45.45%	38.46%	25.84%	21.14%	15.63%	13.77%
10	0.135	53.19%	42.37%	35.71%	23.87%	19.49%	14.37%	12.66%
11	0.120	48.54%	38.46%	32.26%	21.51%	17.51%	12.87%	11.33%
11 1/2	0.113	46.30%	36.76%	30.77%	20.37%	16.56%	12.17%	10.70%

Notes:

1. Percentage of closure can vary slightly due to ASTM chain link fabric specification tolerances

2. Polymer coated wire is specified by core wire diameter, for percent of closure the finish coated outside diameter/gauge is required, check with manufacturer of polymer coated fabric for finished OD diameter. Example: 9 gauge core extruded has a 6 ga. OD finish , 9 gauge core fused has a 8 ga. OD finish

3. Metallic coated wire is listed as finished diameter/gauge (6,9,10,11,11 1/2)

4. The percentages of closure were derived from The Chain Link Fence Manufacturing Institute's, Chain Link Fence Wind Load Guide for the Selection of Line Post and Line Post Spacing, WLG2445

Cantilevered Retaining Wall

File = R:\New Projects\LRS\Quantico\Engineering\Enercalc\landscape design.ec6
ENERCALC, INC. 1983-2016, Build:6.16.6.7, Ver:6.16.6.7

Lic. # : KW-06000330 **Licensee : cvm engineers**

Description : Softball Field - Retaining Wall no Fence

Calculations per ACI 318-11, ACI 530-11, IBC 2012, CBC 2013, ASCE 7-10

Criteria

Retained Height	=	5.50 ft
Wall height above soil	=	0.00 ft
Slope Behind Wall	=	0.00 : 1
Height of Soil over Toe	=	24.00 in
Water height over heel	=	0.0 ft

Vertical component of active
Lateral soil pressure options:
NOT USED for Soil Pressure.
NOT USED for Sliding Resistance.
NOT USED for Overturning Resistance.

Soil Data

Allow Soil Bearing	=	3,000.0 psf
Equivalent Fluid Pressure Method		
Heel Active Pressure	=	40.0 psf/ft
Toe Active Pressure	=	40.0 psf/ft
Passive Pressure	=	389.0 psf/ft
Soil Density, Heel	=	135.00 pcf
Soil Density, Toe	=	135.00 pcf
Friction Coeff btwn Ftg & Soil	=	0.400
Soil height to ignore for passive pressure	=	12.00 in

Surcharge Loads

Surcharge Over Heel	=	100.0 psf
NOT Used To Resist Sliding & Overturning		
Surcharge Over Toe	=	0.0 psf
NOT Used for Sliding & Overturning		

Lateral Load Applied to Stem

Lateral Load	=	0.0 plf
...Height to Top	=	12.75 ft
...Height to Bottom	=	11.75 ft
Wind on Exposed Stem	=	0.0 psf

Adjacent Footing Load

Adjacent Footing Load	=	0.0 lbs
Footing Width	=	0.00 ft
Eccentricity	=	0.00 in
Wall to Ftg CL Dist	=	0.00 ft
Footing Type		Line Load
Base Above/Below Soil at Back of Wall	=	0.0 ft
Poisson's Ratio	=	0.300

Axial Load Applied to Stem

Axial Dead Load	=	0.0 lbs
Axial Live Load	=	0.0 lbs
Axial Load Eccentricity	=	0.0 in

Design Summary

Wall Stability Ratios

Overturning	=	2.57	OK
Sliding	=	3.60	OK

Total Bearing Load	=	3,008	lbs
...resultant ecc.	=	6.94	in

Soil Pressure @ Toe	=	1,405	psf	OK
Soil Pressure @ Heel	=	99	psf	OK
Allowable	=	3,000	psf	

Soil Pressure Less Than Allowable

ACI Factored @ Toe	=	1,685	psf
ACI Factored @ Heel	=	119	psf

Footing Shear @ Toe	=	3.8	psi	OK
Footing Shear @ Heel	=	7.6	psi	OK
Allowable	=	94.9	psi	

Sliding Calcs (Vertical Component NOT Used)

Lateral Sliding Force	=	942.4	lbs
less 100% Passive Force	= -	2,188.1	lbs
less 100% Friction Force	= -	1,208.0	lbs
Added Force Req'd	=	0.0	lbs OK
....for 1.5 : 1 Stability	=	0.0	lbs OK

Load Factors

Dead Load	1.200
Live Load	1.600
Earth, H	1.600
Wind, W	1.600
Seismic, E	1.000

Stem Construction

Top Stem

			Stem OK
Design Height Above Ftg	ft =		0.00
Wall Material Above "Ht"	=		Concrete
Thickness	in =		12.00
Rebar Size	=		# 5
Rebar Spacing	in =		12.00
Rebar Placed at	=		Edge

Design Data

fb/FB + fa/Fa	=	0.173
Total Force @ Section	lbs =	1,100.7
Moment....Actual	ft-l =	2,406.4
Moment.....Allowable	ft-l =	13,892.6
Shear.....Actual	psi =	9.0
Shear.....Allowable	psi =	94.9
Wall Weight	psf =	150.0
Rebar Depth 'd'	in =	10.19
Lap splice if above	in =	18.50
Lap splice if below	in =	6.00
Hook embed into footing	in =	6.00

Concrete Data

f'c	psi =	4,000.0
Fy	psi =	

Cantilevered Retaining Wall

File = R:\New Projects\LRS\Quantico\Engineering\Enercalc\landscape design.ec6
ENERCALC, INC. 1983-2016, Build:6.16.6.7, Ver:6.16.6.7

Lic. # : KW-06000330 **Licensee : cvm engineers**

Description : Softball Field - Retaining Wall no Fence

Footing Dimensions & Strengths

Toe Width	=	2.00 ft
Heel Width	=	2.00
Total Footing Width	=	4.00
Footing Thickness	=	18.00 in
Key Width	=	0.00 in
Key Depth	=	0.00 in
Key Distance from Toe	=	0.00 ft

f'c = 4,000 psi Fy = 60,000 psi
Footing Concrete Density = 150.00 pcf
Min. As % = 0.0018
Cover @ Top 3.00 @ Btm.= 3.00 in

Footing Design Results

		Toe	Heel	
Factored Pressure	=	1,685	119	psf
Mu' : Upward	=	2,849	0	ft-lb
Mu' : Downward	=	1,188	661	ft-lb
Mu: Design	=	1,661	661	ft-lb
Actual 1-Way Shear	=	3.77	7.59	psi
Allow 1-Way Shear	=	94.87	94.87	psi

Toe Reinforcing = # 4 @ 12.00 in
Heel Reinforcing = # 4 @ 12.00 in
Key Reinforcing = None Spec'd

Other Acceptable Sizes & Spacings

Toe: Not req'd, Mu < S * Fr
Heel: Not req'd, Mu < S * Fr
Key: No key defined

Summary of Overturning & Resisting Forces & Moments

Item		.....OVERTURNING..... Force lbs	Distance ft	Moment ft-lb
Heel Active Pressure	=	980.0	2.33	2,286.7
Surcharge over Heel	=	207.4	3.50	725.9
Toe Active Pressure	=	-245.0	1.17	-285.8
Surcharge Over Toe	=			
Adjacent Footing Load	=			
Added Lateral Load	=			
Load @ Stem Above Soil	=			
Total	=	942.4	O.T.M. =	2,726.8

Resisting/Overturning Ratio = 2.57
Vertical Loads used for Soil Pressure = 3,007.5 lbs

		.....RESISTING..... Force lbs	Distance ft	Moment ft-lb
Soil Over Heel	=	742.5	3.50	2,598.8
Sloped Soil Over Heel	=			
Surcharge Over Heel	=			
Adjacent Footing Load	=			
Axial Dead Load on Stem	=			
* Axial Live Load on Stem	=			
Soil Over Toe	=	540.0	1.00	540.0
Surcharge Over Toe	=			
Stem Weight(s)	=	825.0	2.50	2,062.5
Earth @ Stem Transitions	=			
Footing Weight	=	900.0	2.00	1,800.0
Key Weight	=			
Vert. Component	=			
Total	=	3,007.5 lbs	R.M. =	7,001.3

* Axial live load NOT included in total displayed, or used for overturning resistance, but is included for soil pressure calculation.

Cantilevered Retaining Wall

File = R:\New Projects\LRS\Quantico\Engineering\Enercalc\landscape design.ec6
ENERCALC, INC. 1983-2016, Build:6.16.6.7, Ver:6.16.6.7

Lic. # : KW-06000330 **Licensee : cvm engineers**

Description : Softball Field - Retaining Wall w/ Fence

Calculations per ACI 318-11, ACI 530-11, IBC 2012, CBC 2013, ASCE 7-10

Criteria

Retained Height	=	5.50 ft
Wall height above soil	=	14.50 ft
Slope Behind Wall	=	0.00 : 1
Height of Soil over Toe	=	24.00 in
Water height over heel	=	0.0 ft

Vertical component of active
Lateral soil pressure options:
NOT USED for Soil Pressure.
NOT USED for Sliding Resistance.
NOT USED for Overturning Resistance.

Soil Data

Allow Soil Bearing	=	3,000.0 psf
Equivalent Fluid Pressure Method		
Heel Active Pressure	=	40.0 psf/ft
Toe Active Pressure	=	40.0 psf/ft
Passive Pressure	=	389.0 psf/ft
Soil Density, Heel	=	135.00 pcf
Soil Density, Toe	=	135.00 pcf
Friction Coeff btwn Ftg & Soil	=	0.400
Soil height to ignore for passive pressure	=	12.00 in

Surcharge Loads

Surcharge Over Heel	=	100.0 psf
NOT Used To Resist Sliding & Overturning		
Surcharge Over Toe	=	0.0 psf
NOT Used for Sliding & Overturning		

Lateral Load Applied to Stem

Lateral Load	=	0.0 plf
...Height to Top	=	12.75 ft
...Height to Bottom	=	11.75 ft
Wind on Exposed Stem	=	50.0 psf

Adjacent Footing Load

Adjacent Footing Load	=	0.0 lbs
Footing Width	=	0.00 ft
Eccentricity	=	0.00 in
Wall to Ftg CL Dist	=	0.00 ft
Footing Type		Line Load
Base Above/Below Soil at Back of Wall	=	0.0 ft
Poisson's Ratio	=	0.300

Axial Load Applied to Stem

Axial Dead Load	=	0.0 lbs
Axial Live Load	=	0.0 lbs
Axial Load Eccentricity	=	0.0 in

Design Summary

Wall Stability Ratios

Overturning	=	1.78	OK
Sliding	=	2.75	OK

Total Bearing Load	=	5,993	lbs
...resultant ecc.	=	21.58	in
Soil Pressure @ Toe	=	2,348 psf	OK
Soil Pressure @ Heel	=	0 psf	OK
Allowable	=	3,000 psf	

Soil Pressure Less Than Allowable

ACI Factored @ Toe	=	2,818 psf	
ACI Factored @ Heel	=	0 psf	
Footing Shear @ Toe	=	8.6 psi	OK
Footing Shear @ Heel	=	22.8 psi	OK
Allowable	=	94.9 psi	

Sliding Calcs (Vertical Component NOT Used)

Lateral Sliding Force	=	1,667.4	lbs
less 100% Passive Force	= -	2,188.1	lbs
less 100% Friction Force	= -	2,390.0	lbs
Added Force Req'd	=	0.0	lbs OK
....for 1.5 : 1 Stability	=	0.0	lbs OK

Load Factors

Dead Load	1.200
Live Load	1.600
Earth, H	1.600
Wind, W	1.600
Seismic, E	1.000

Stem Construction

		Top Stem	2nd Stem OK
Design Height Above Ftg	ft =	5.50	0.00
Wall Material Above "Ht"	=	Fence	Concrete
Thickness	in =	0.00	24.00
Rebar Size	=	# 5	# 5
Rebar Spacing	in =	12.00	12.00
Rebar Placed at	=	Edge	Edge
Design Data			
fb/FB + fa/Fa	=	0.579	0.561
Total Force @ Section	lbs =	725.0	2,260.7
Moment....Actual	ft-l =	5,256.3	17,196.4
Moment.....Allowable	ft-l =	0.0	30,632.6
Shear.....Actual	psi =	0.0	8.5
Shear.....Allowable	psi =	0.0	94.9
Wall Weight	psf =	0.0	300.0
Rebar Depth 'd'	in =	0.00	22.19
Lap splice if above	in =	0.00	18.50
Lap splice if below	in =	0.00	3.60
Hook embed into footing	in =	0.00	3.60
Concrete Data			
f'c	psi =	4,000.0	4,000.0
Fy	psi =	60,000.0	60,000.0

Cantilevered Retaining Wall

File = R:\New Projects\LRS\Quantico\Engineering\Enercalc\landscape design.ec6
ENERCALC, INC. 1983-2016, Build:6.16.6.7, Ver:6.16.6.7

Lic. # : KW-06000330 **Licensee : cvm engineers**

Description : Softball Field - Retaining Wall w/ Fence

Footing Dimensions & Strengths

Toe Width	=	2.00 ft
Heel Width	=	5.00
Total Footing Width	=	7.00
Footing Thickness	=	18.00 in
Key Width	=	0.00 in
Key Depth	=	0.00 in
Key Distance from Toe	=	0.00 ft

f'c = 4,000 psi Fy = 60,000 psi
Footing Concrete Density = 150.00 pcf
Min. As % = 0.0018
Cover @ Top 3.00 @ Btm.= 3.00 in

Footing Design Results

		Toe	Heel	
Factored Pressure	=	2,818	0	psf
Mu' : Upward	=	4,899	0	ft-lb
Mu' : Downward	=	1,188	5,945	ft-lb
Mu: Design	=	3,711	5,945	ft-lb
Actual 1-Way Shear	=	8.63	22.78	psi
Allow 1-Way Shear	=	94.87	94.87	psi

Toe Reinforcing = # 4 @ 12.00 in
Heel Reinforcing = # 4 @ 12.00 in
Key Reinforcing = None Spec'd

Other Acceptable Sizes & Spacings

Toe: Not req'd, Mu < S * Fr
Heel: Not req'd, Mu < S * Fr
Key: No key defined

Summary of Overturning & Resisting Forces & Moments

Item		.....OVERTURNING..... Force lbs	Distance ft	Moment ft-lb
Heel Active Pressure	=	980.0	2.33	2,286.7
Surcharge over Heel	=	207.4	3.50	725.9
Toe Active Pressure	=	-245.0	1.17	-285.8
Surcharge Over Toe	=			
Adjacent Footing Load	=			
Added Lateral Load	=			
Load @ Stem Above Soil	=	725.0	14.25	10,331.3
Total	=	1,667.4	O.T.M. =	13,058.0

Resisting/Overturning Ratio = 1.78
Vertical Loads used for Soil Pressure = 5,992.5 lbs

		.....RESISTING..... Force lbs	Distance ft	Moment ft-lb
Soil Over Heel	=	2,227.5	5.50	12,251.3
Sloped Soil Over Heel	=			
Surcharge Over Heel	=			
Adjacent Footing Load	=			
Axial Dead Load on Stem	=			
* Axial Live Load on Stem	=			
Soil Over Toe	=	540.0	1.00	540.0
Surcharge Over Toe	=			
Stem Weight(s)	=	1,650.0	3.00	4,950.0
Earth @ Stem Transitions	=			
Footing Weight	=	1,575.0	3.50	5,512.5
Key Weight	=			
Vert. Component	=			
Total	=	5,992.5 lbs	R.M. =	23,253.8

* Axial live load NOT included in total displayed, or used for overturning resistance, but is included for soil pressure calculation.