GENERAL NOTES:

1. COORD DWG'S W/ INDIVIDUAL SPEC SECTIONS FOR GENERAL & SUPPLEMENTARY PROVISIONS TO THE CONTRACT DOCUMENTS.
2. FOR TYP EXT WALL & ROOF CONSTR, SEE SHEET A500
3. SEE A410-SERIES SHEETS FOR EXT CW & SF FRAME SCHEDULES
4. FOR DR SCHED, SEE SHEET A404
5. CENTER EXT WALL DEVICES ON BRK COURSING, UNO

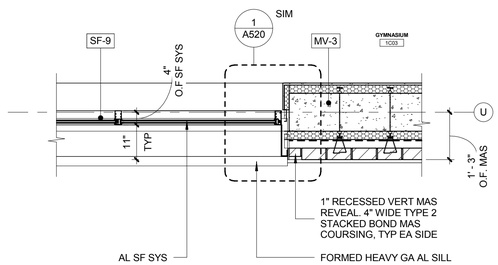

7 PLAN SECTION
SCALE: 1/2" = 1'-0"

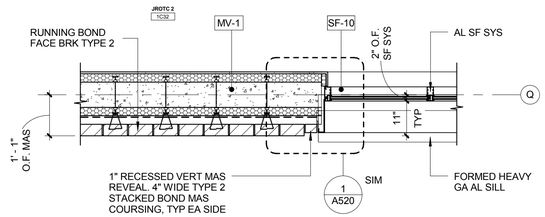

6 PLAN SECTION
SCALE: 1/2" = 1'-0"

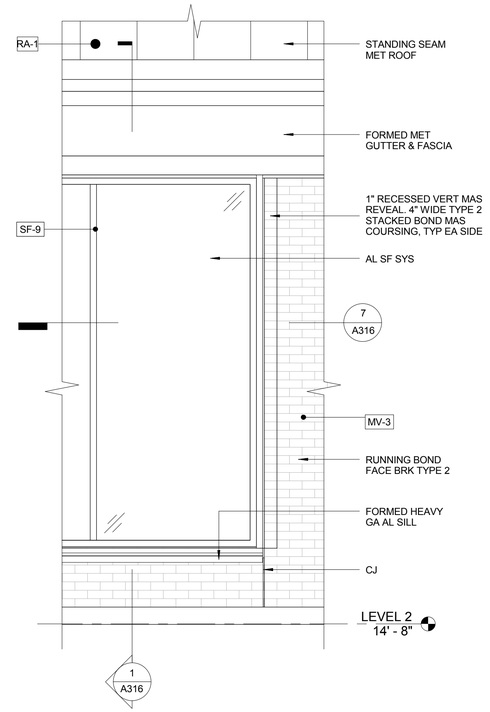

5 ENLARGED ELEV
SCALE: 1/2" = 1'-0"

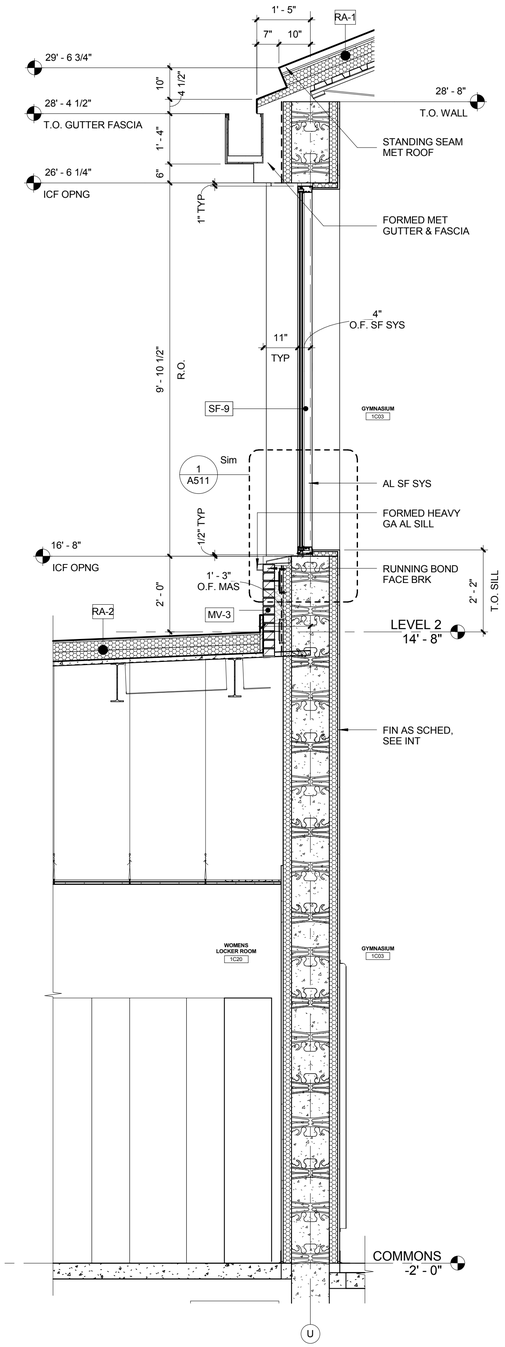

1 WALL SECTION
SCALE: 1/2" = 1'-0"

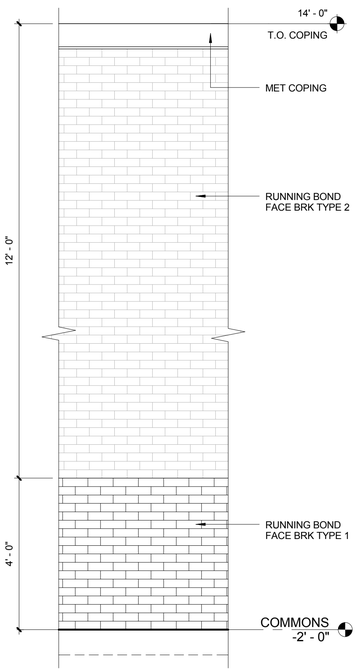

4 ENLARGED ELEV
SCALE: 1/2" = 1'-0"

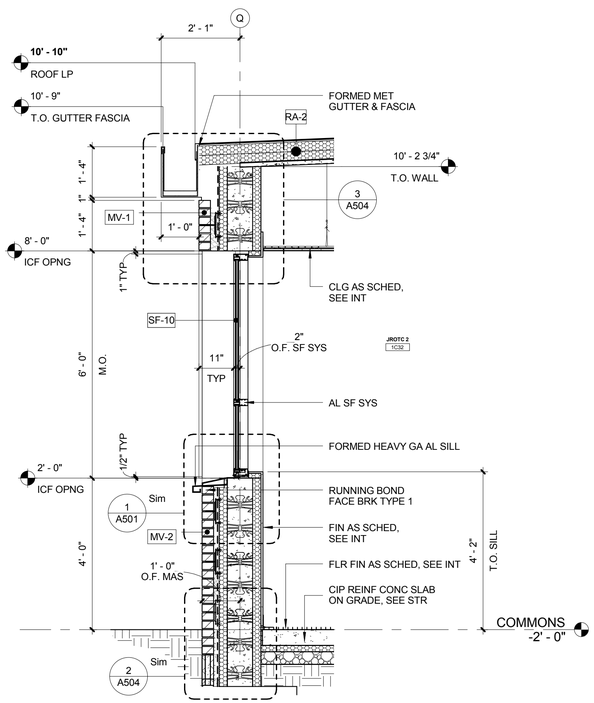

3 WALL SECTION
SCALE: 1/2" = 1'-0"

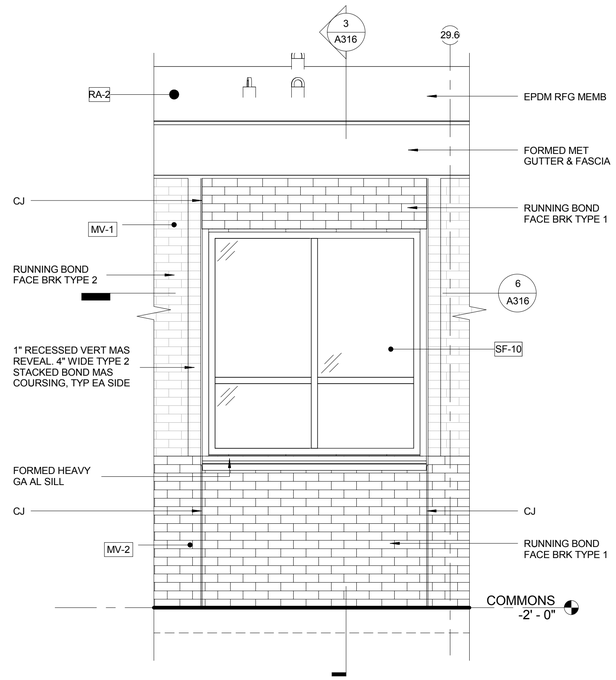

2 ENLARGED ELEV
SCALE: 1/2" = 1'-0"

0 1' 2' 4' 6'
SCALE AT FULL SIZE: 1/2" = 1'-0"

SYM	DESCRIPTION	DATE	APPR

NAVFAC

REGISTERED ARCHITECT PENNSYLVANIA KEITH G. FALLON RAUTAHARJU

SEAL

EWING COLE
Federal Reserve Bank Building
100 North 6th Street
Philadelphia, PA 19106-1590
Tel: 215-923-2020 Fax: 215-574-0952

A/E INFO

APPROVED

FOR COMMANDER NAVFAC
ACTIVITY

SATISFACTORY TO DATE
Designer KBM Checker
PM/DM
BRANCH MANAGER
CHIEF ENG/ ARCH
FIRE PROTECTION

DEPARTMENT OF THE NAVY
NAVAL FACILITIES ENGINEERING COMMAND
DoDEA
NAVAL FACILITIES ENGINEERING COMMAND ~ WASHINGTON
MARINE CORPS BASE QUANTICO, VIRGINIA
MARINE CORPS BASE QUANTICO
QUANTICO, VA
REPLACE QUANTICO M/H SCHOOL
WALL SECTIONS

SCALE: As indicated
PROJECT NO.: P-021
CONSTR. CONTR. NO.
W91236-15-C-0023
NAVFAC DRAWING NO.
13090939
SHEET 185 OF 789
A316

DRAWFORM REVISION: 10 MARCH 2009

RTA SUBMISSION - 10/13/2016

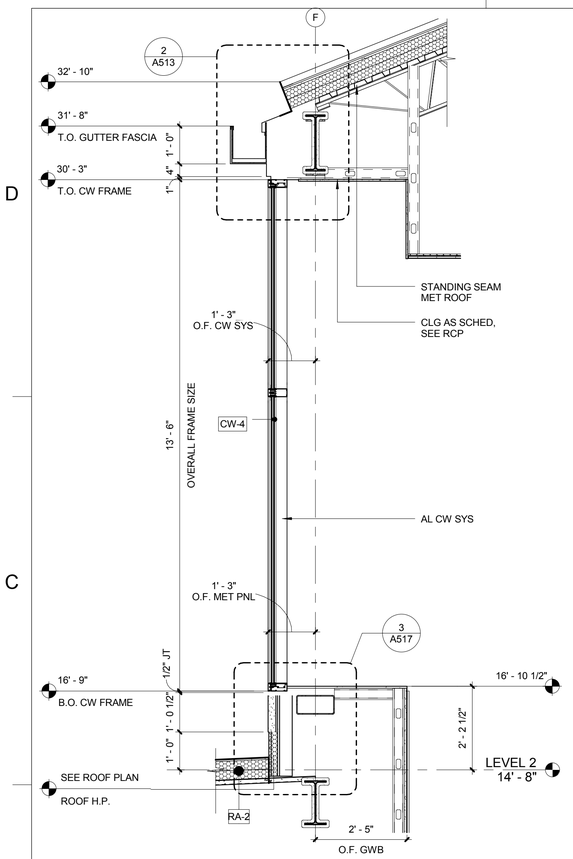

5 WALL SECTION
SCALE: 1/2" = 1'-0"

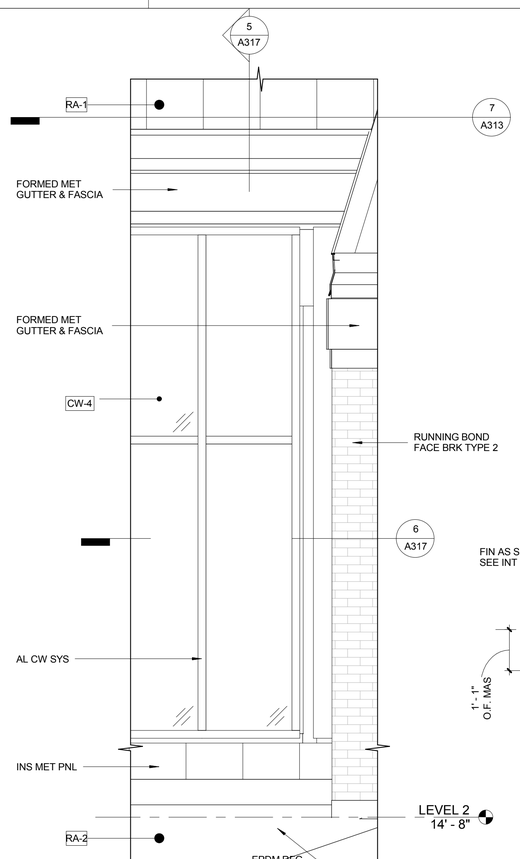

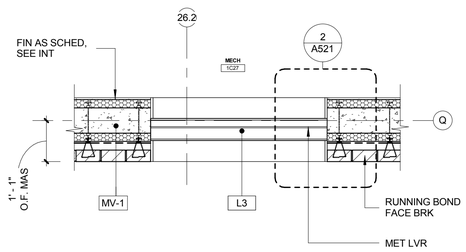

7 PLAN SECTION
SCALE: 1/2" = 1'-0"

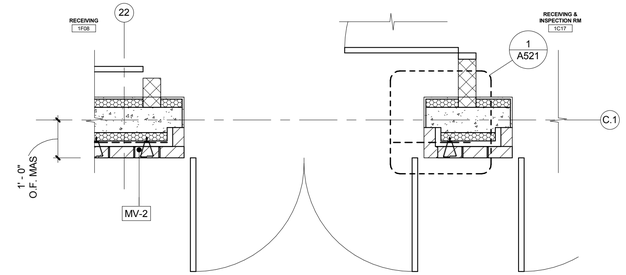

8 PLAN SECTION
SCALE: 1/2" = 1'-0"

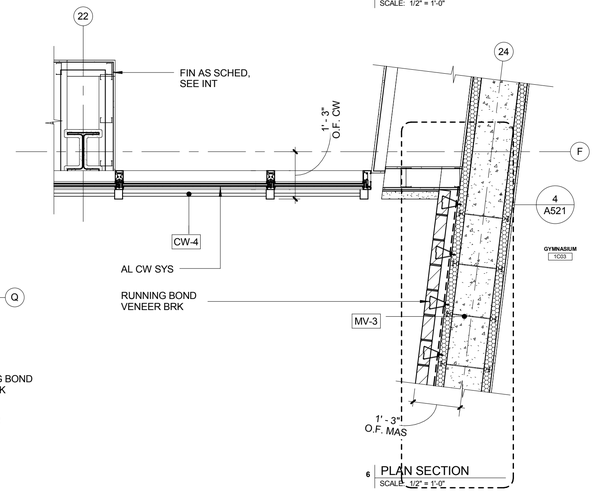

6 PLAN SECTION
SCALE: 1/2" = 1'-0"

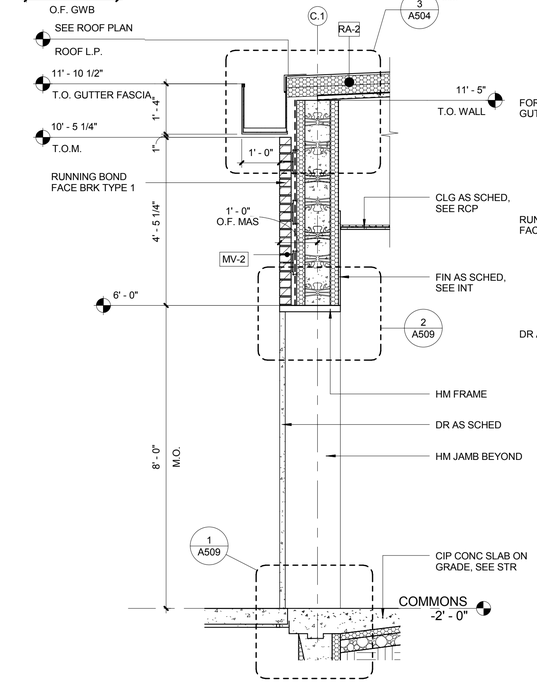

4 WALL SECTION
SCALE: 1/2" = 1'-0"

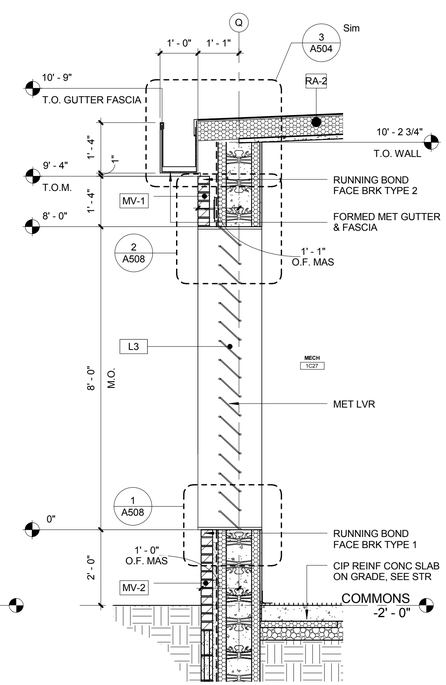

2 WALL SECTION
SCALE: 1/2" = 1'-0"

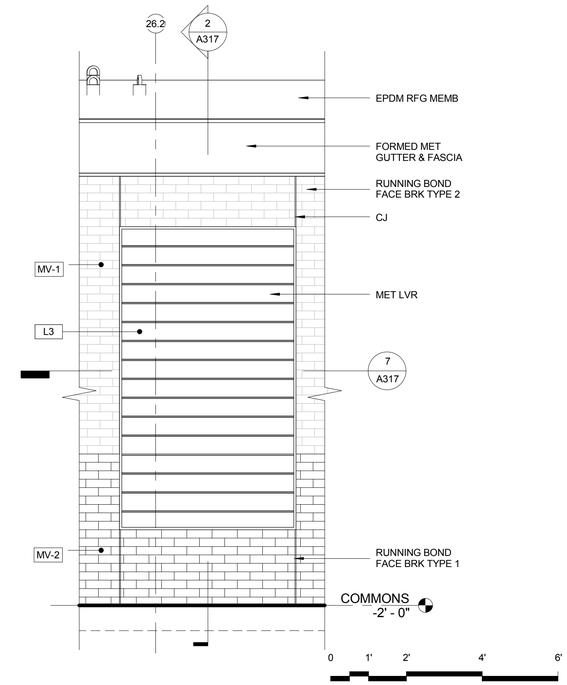

1 ENLARGED ELEV
SCALE: 1/2" = 1'-0"

SCALE AT FULL SIZE: 1/2" = 1'-0"

3 ENLARGED ELEV
SCALE: 1/2" = 1'-0"

RTA SUBMISSION - 10/13/2016

SYM	DESCRIPTION	DATE	APPR

NAVFAC

SEAL

EWING COLE
Federal Reserve Bank Building
100 North 6th Street
Philadelphia, PA 19106-1590
Tel: 215-923-2020 Fax: 215-574-0952

A/E INFO

APPROVED

FOR COMMANDER NAVFAC
ACTIVITY

SATISFACTORY TO DATE
Designer KBM Checker
PM/DM
BRANCH MANAGER
CHIEF ENG/ ARCH
FIRE PROTECTION

DEPARTMENT OF THE NAVY
DoDEA
NAVAL FACILITIES ENGINEERING COMMAND
NAVAL FACILITIES ENGINEERING COMMAND ~ WASHINGTON
MARINE CORPS BASE QUANTICO
MARINE CORPS BASE QUANTICO, VIRGINIA
QUANTICO, VA
REPLACE QUANTICO M/H SCHOOL
WALL SECTIONS

SCALE: 1/2" = 1'-0"
PROJECT NO.: P-021
CONSTR. CONTR. NO.: W91236-15-C-0023
NAVFAC DRAWING NO.: 13090940
SHEET 186 OF 789
A317

DRAWFORM REVISION: 10 MARCH 2009

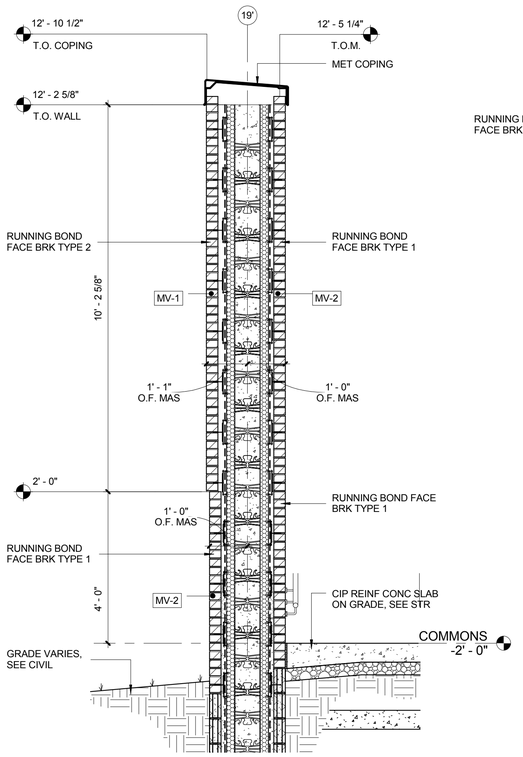

4 WALL SECTION
SCALE: 1/2" = 1'-0"

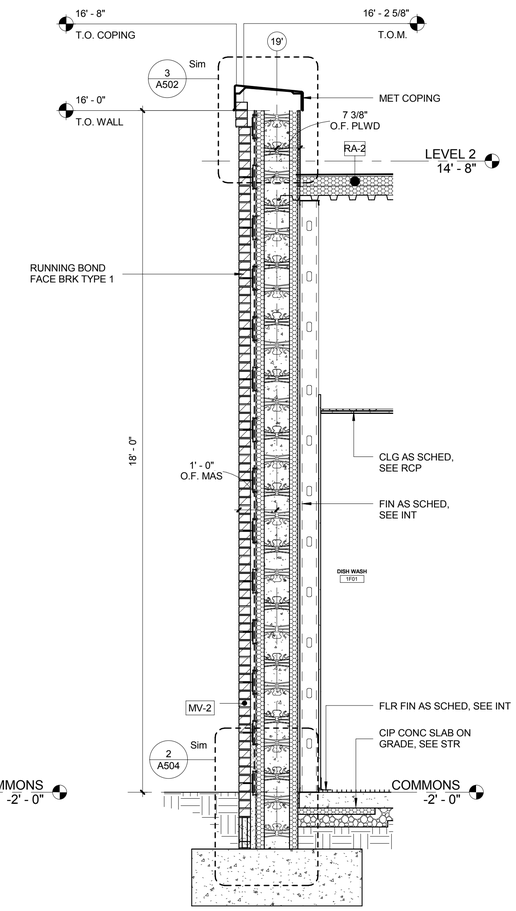

3 WALL SECTION
SCALE: 1/2" = 1'-0"

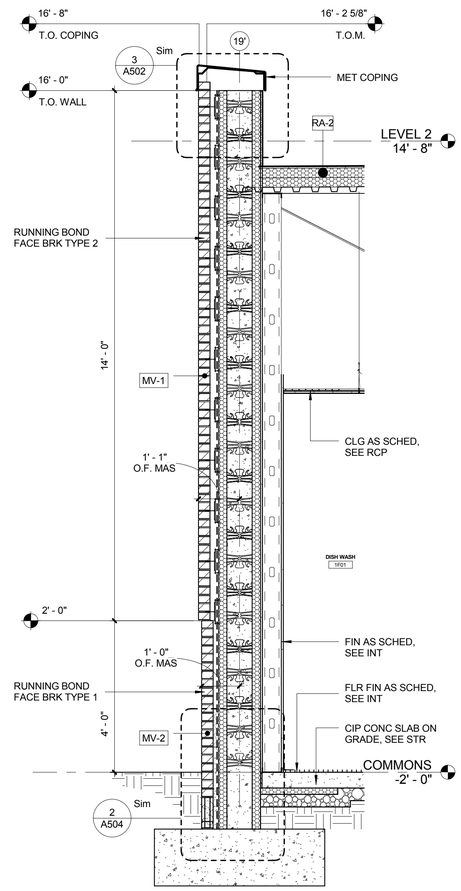

2 WALL SECTION
SCALE: 1/2" = 1'-0"

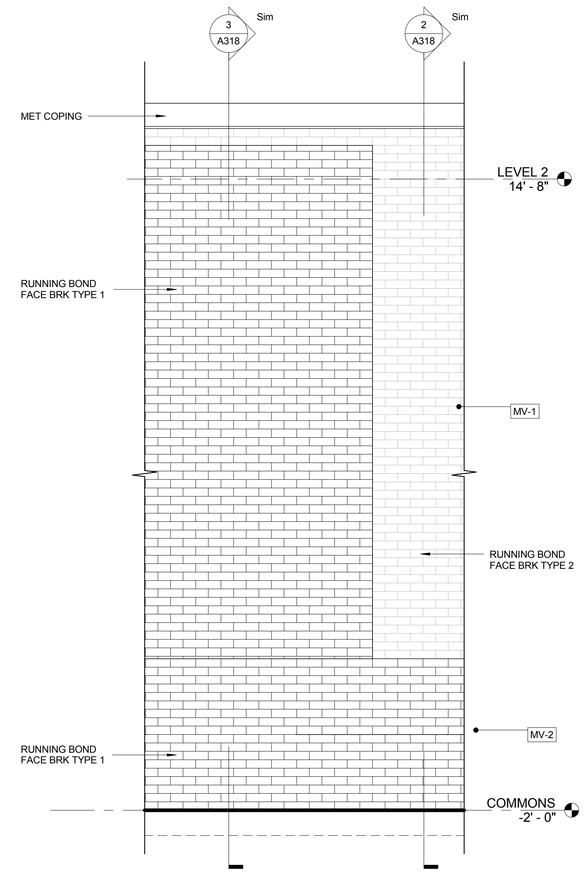

1 ENLARGED ELEV
SCALE: 1/2" = 1'-0"

GENERAL NOTES:

1. COORD DWG'S W/ INDIVIDUAL SPEC SECTIONS FOR GENERAL & SUPPLEMENTARY PROVISIONS TO THE CONTRACT DOCUMENTS.
2. FOR TYP EXT WALL & ROOF CONSTR, SEE SHEET A500
3. SEE A410-SERIES SHEETS FOR EXT CW & SF FRAME SCHEDULES
4. FOR DR SCHED, SEE SHEET A404
5. CENTER EXT WALL DEVICES ON BRK COURSING, UNO

0 1' 2' 4' 6'
SCALE AT FULL SIZE: 1/2" = 1'-0"

SYM	DESCRIPTION	DATE	APPR

NAVFAC

REGISTERED ARCHITECT PENNSYLVANIA KEITH G. FALLON RAUTAHARJU

SEAL

EWING COLE
Federal Reserve Bank Building
100 North 6th Street
Philadelphia, PA 19106-1590
Tel: 215-923-2020 Fax: 215-574-0952

A/E INFO

APPROVED

FOR COMMANDER NAVFAC
ACTIVITY

SATISFACTORY TO DATE

Designer KBM Checker

PM/DM

BRANCH MANAGER

CHIEF ENG/ ARCH

FIRE PROTECTION

DEPARTMENT OF THE NAVY
NAVAL FACILITIES ENGINEERING COMMAND
DoDEA
NAVAL FACILITIES ENGINEERING COMMAND ~ WASHINGTON
MARINE CORPS BASE QUANTICO, VIRGINIA
MARINE CORPS BASE QUANTICO
QUANTICO, VA

REPLACE QUANTICO M/H SCHOOL

WALL SECTIONS

SCALE: As indicated
PROJECT NO.: P-021
CONSTR. CONTR. NO.
W91236-15-C-0023
NAVFAC DRAWING NO.
13090941
SHEET 187 OF 789
A318

DRAWFORM REVISION 10 MARCH 2009

RTA SUBMISSION - 10/13/2016

GENERAL NOTES:

1. COORD DWG'S W/ INDIVIDUAL SPEC SECTIONS FOR GENERAL & SUPPLEMENTARY PROVISIONS TO THE CONTRACT DOCUMENTS.
2. FOR TYP EXT WALL & ROOF CONSTR, SEE SHEET A500
3. SEE A410-SERIES SHEETS FOR EXT CW & SF FRAME SCHEDULES
4. FOR DR SCHED, SEE SHEET A404
5. CENTER EXT WALL DEVICES ON BRK COURSING, UNO

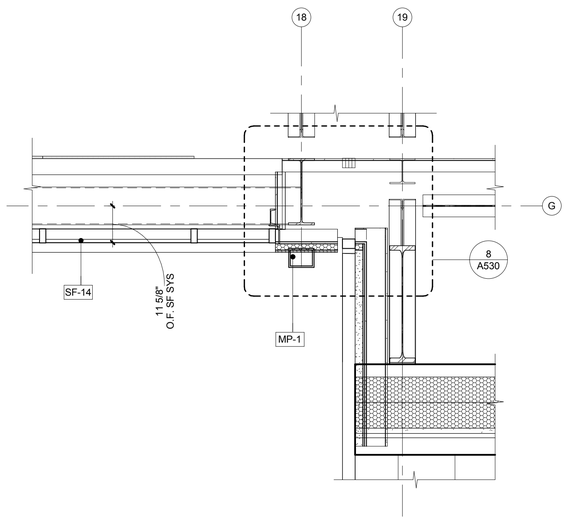

4 PLAN SECTION
SCALE: 1/2" = 1'-0"

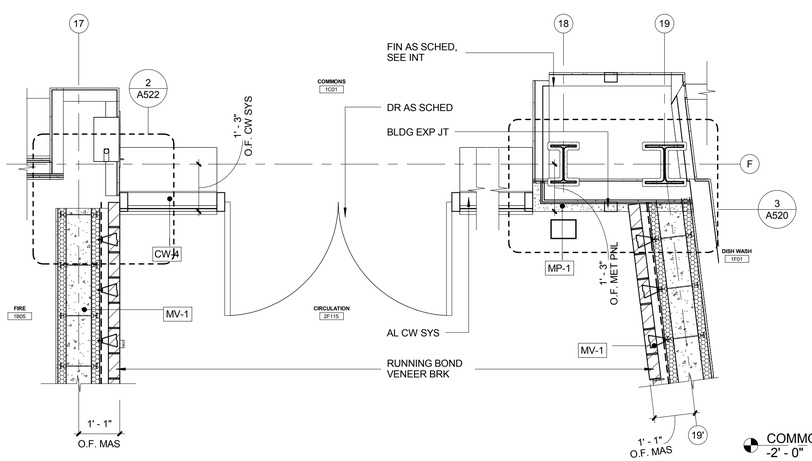

3 PLAN SECTION
SCALE: 1/2" = 1'-0"

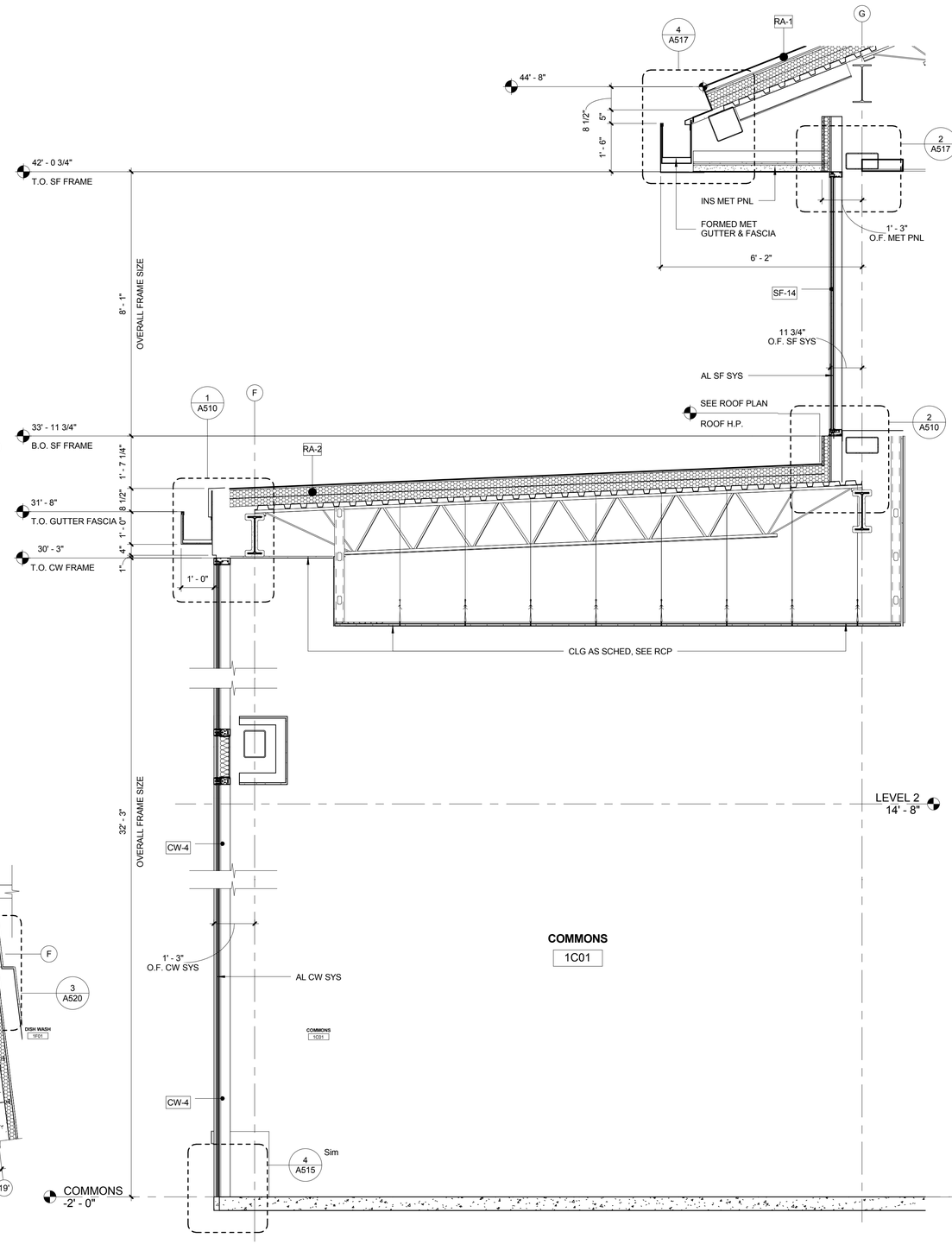

2 WALL SECTION
SCALE: 1/2" = 1'-0"

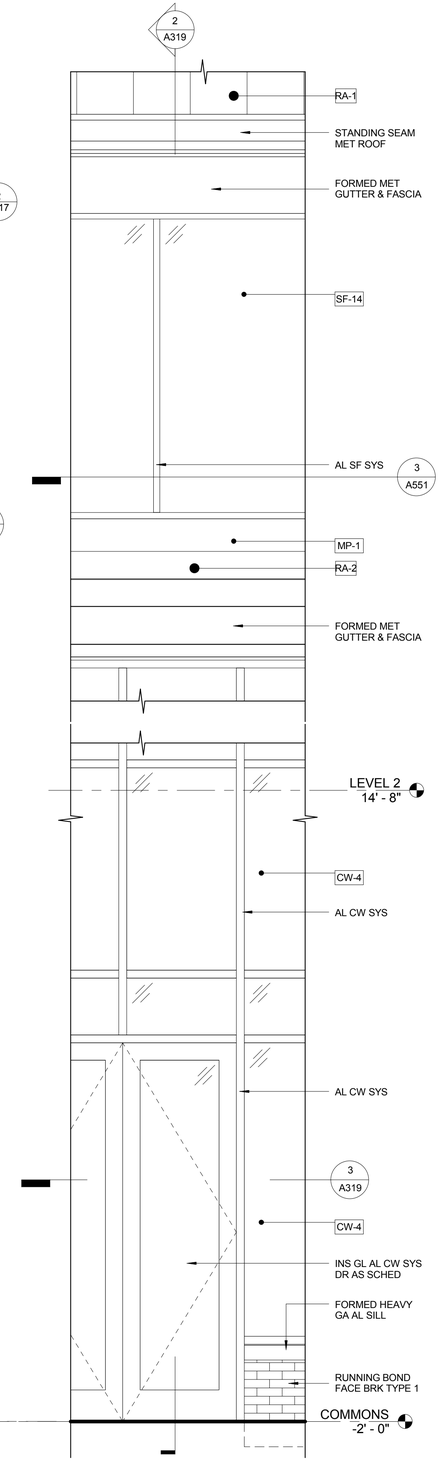

1 ENLARGED ELEV
SCALE: 1/2" = 1'-0"

0 1' 2' 4' 6'
SCALE AT FULL SIZE: 1/2" = 1'-0"

SYM	DESCRIPTION	DATE	APPR

NAVFAC

REGISTERED ARCHITECT PENNSYLVANIA KEITH G. FALLON RAUTZAHN

SEAL

EWING COLE
Federal Reserve Bank Building
100 North 6th Street
Philadelphia, PA 19106-1590
Tel: 215-923-2020 Fax: 215-574-0952

A/E INFO

APPROVED

FOR COMMANDER NAVFAC ACTIVITY

SATISFACTORY TO DATE

Designer KBM Checker

PM/DM

BRANCH MANAGER

CHIEF ENG/ ARCH

FIRE PROTECTION

DEPARTMENT OF THE NAVY
NAVAL FACILITIES ENGINEERING COMMAND
DoDEA
NAVAL FACILITIES ENGINEERING COMMAND ~ WASHINGTON
MARINE CORPS BASE QUANTICO
MARINE CORPS BASE QUANTICO, VIRGINIA
QUANTICO, VA

REPLACE QUANTICO M/H SCHOOL

WALL SECTIONS

SCALE: As indicated
PROJECT NO.: P-021
CONSTR. CONTR. NO. W91236-15-C-0023
NAVFAC DRAWING NO. 13090942
SHEET 188 OF 789
A319

DRAWFORM REVISION: 10 MARCH 2009

RTA SUBMISSION - 10/13/2016

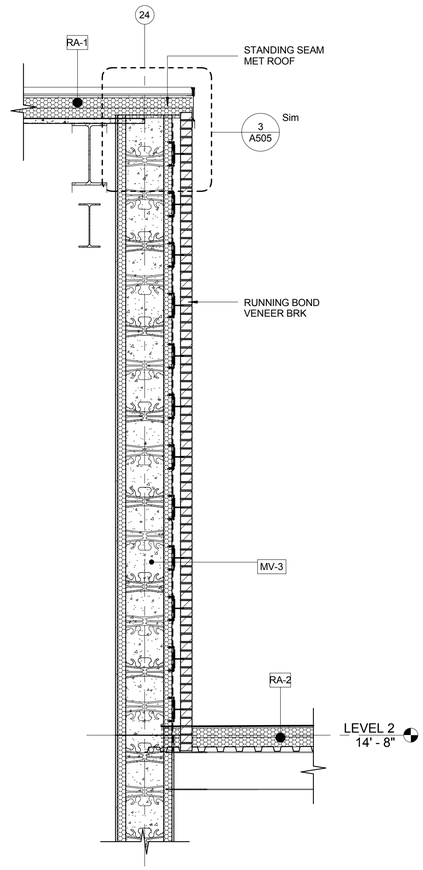

4 WALL SECTION
SCALE: 1/2" = 1'-0"

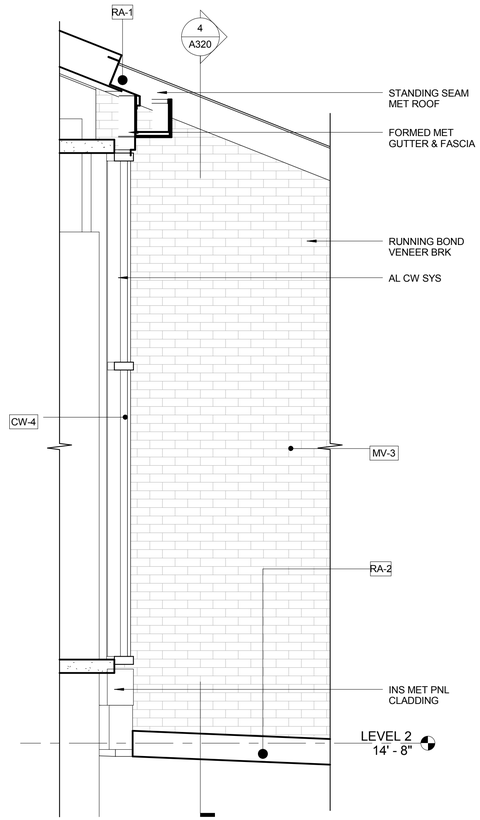

3 ENLARGED ELEV
SCALE: 1/2" = 1'-0"

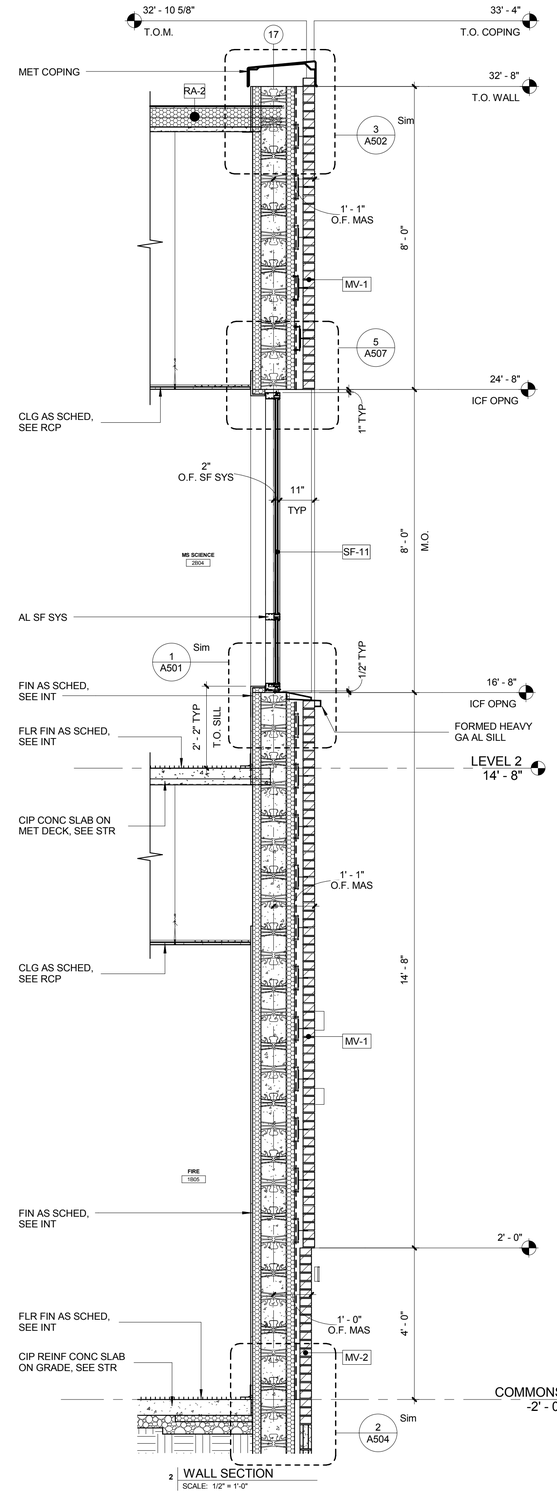

2 WALL SECTION
SCALE: 1/2" = 1'-0"

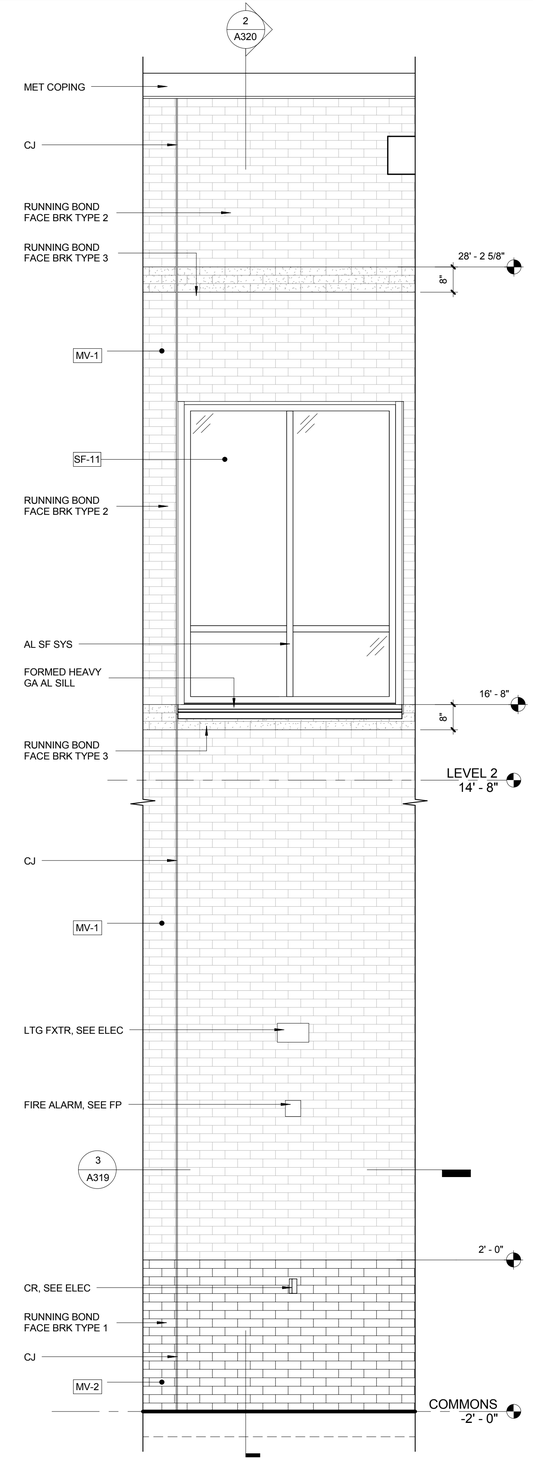

1 ENLARGED ELEV
SCALE: 1/2" = 1'-0"

0 1' 2' 4' 6'
SCALE AT FULL SIZE: 1/2" = 1'-0"

GENERAL NOTES:

1. COORD DWG'S W/ INDIVIDUAL SPEC SECTIONS FOR GENERAL & SUPPLEMENTARY PROVISIONS TO THE CONTRACT DOCUMENTS.
2. FOR TYP EXT WALL & ROOF CONSTR, SEE SHEET A500
3. SEE A410-SERIES SHEETS FOR EXT CW & SF FRAME SCHEDULES
4. FOR DR SCHED, SEE SHEET A404
5. CENTER EXT WALL DEVICES ON BRK COURSING, UNO

SYM	DESCRIPTION	DATE	APPR

NAVFAC

SEAL

EWING COLE
Federal Reserve Bank Building
100 North 6th Street
Philadelphia, PA 19106-1590
Tel: 215-923-2020 Fax: 215-574-0952

A/E INFO

APPROVED

FOR COMMANDER NAVFAC
ACTIVITY

SATISFACTORY TO DATE

Designer KBM Checker
PM/DM
BRANCH MANAGER
CHIEF ENG/ ARCH
FIRE PROTECTION

DEPARTMENT OF THE NAVY
NAVAL FACILITIES ENGINEERING COMMAND
DoDEA
NAVAL FACILITIES ENGINEERING COMMAND ~ WASHINGTON
MARINE CORPS BASE QUANTICO, VIRGINIA
MARINE CORPS BASE QUANTICO
QUANTICO, VA

REPLACE QUANTICO M/H SCHOOL

WALL SECTIONS

SCALE: As indicated
PROJECT NO.: P-021
CONSTR. CONTR. NO. W91236-15-C-0023
NAVFAC DRAWING NO. 13090943
SHEET 189 OF 789
A320

DRAWFORM REVISION: 10 MARCH 2009

RTA SUBMISSION - 10/13/2016

GENERAL NOTES:

1. COORD DWG'S W/ INDIVIDUAL SPEC SECTIONS FOR GENERAL & SUPPLEMENTARY PROVISIONS TO THE CONTRACT DOCUMENTS.
2. FOR TYP EXT WALL & ROOF CONSTR, SEE SHEET A500
3. SEE A410-SERIES SHEETS FOR EXT CW & SF FRAME SCHEDULES
4. FOR DR SCHED, SEE SHEET A404
5. CENTER EXT WALL DEVICES ON BRK COURSING, UNO

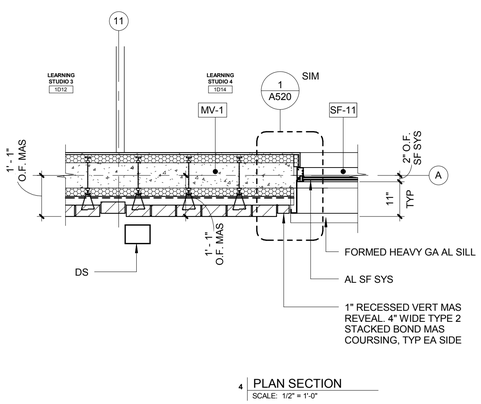

4 PLAN SECTION
SCALE: 1/2" = 1'-0"

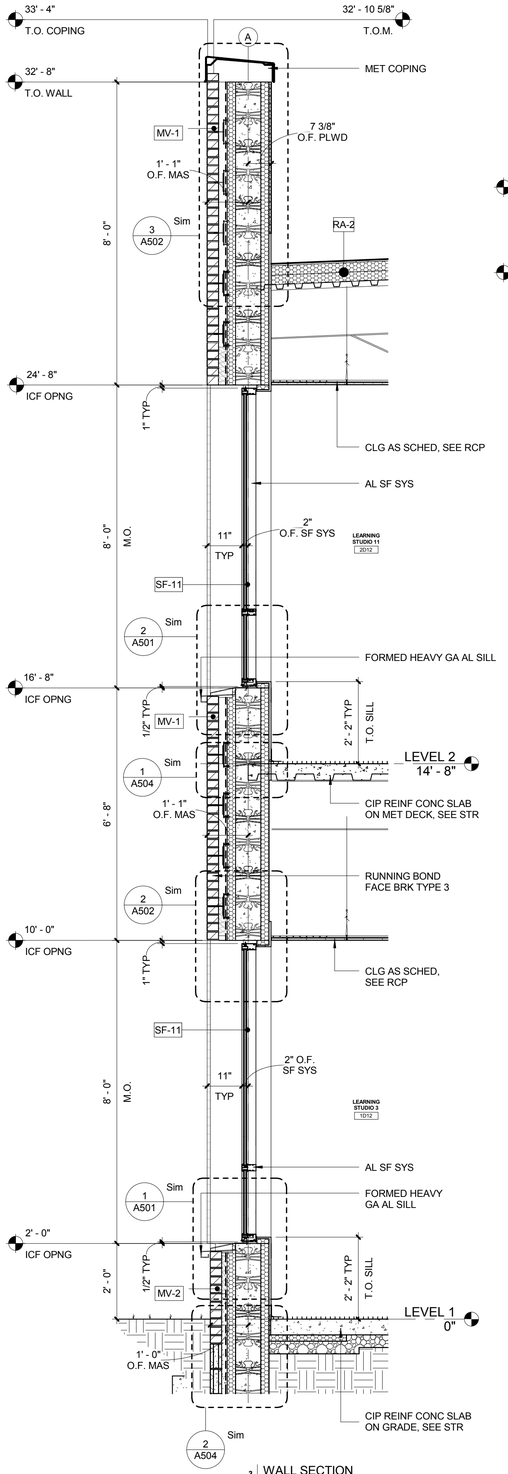

3 WALL SECTION
SCALE: 1/2" = 1'-0"

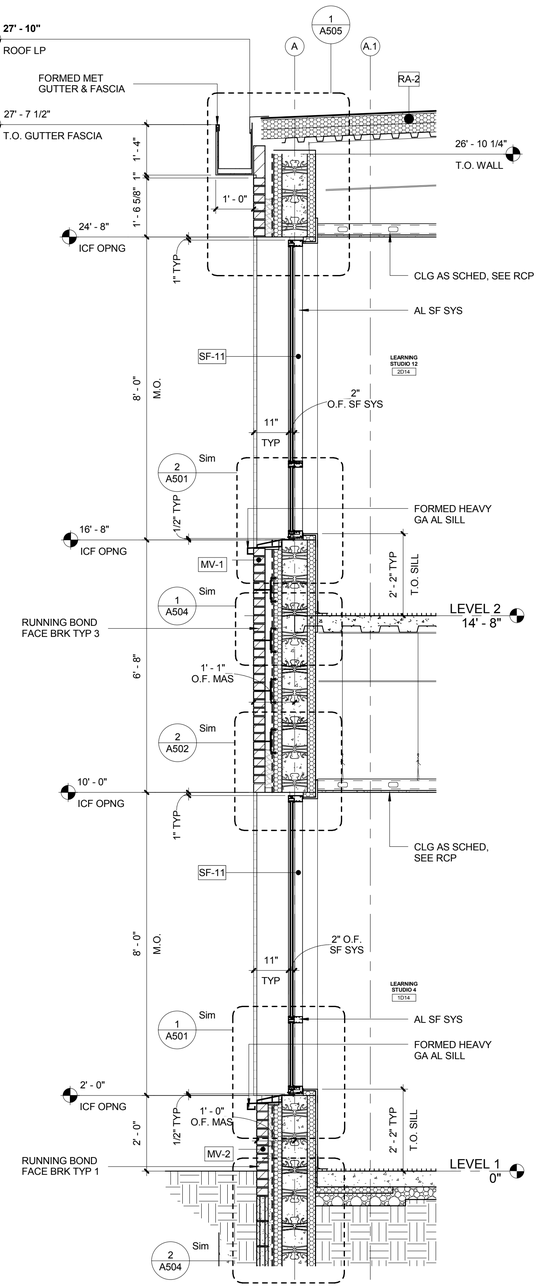

2 WALL SECTION
SCALE: 1/2" = 1'-0"

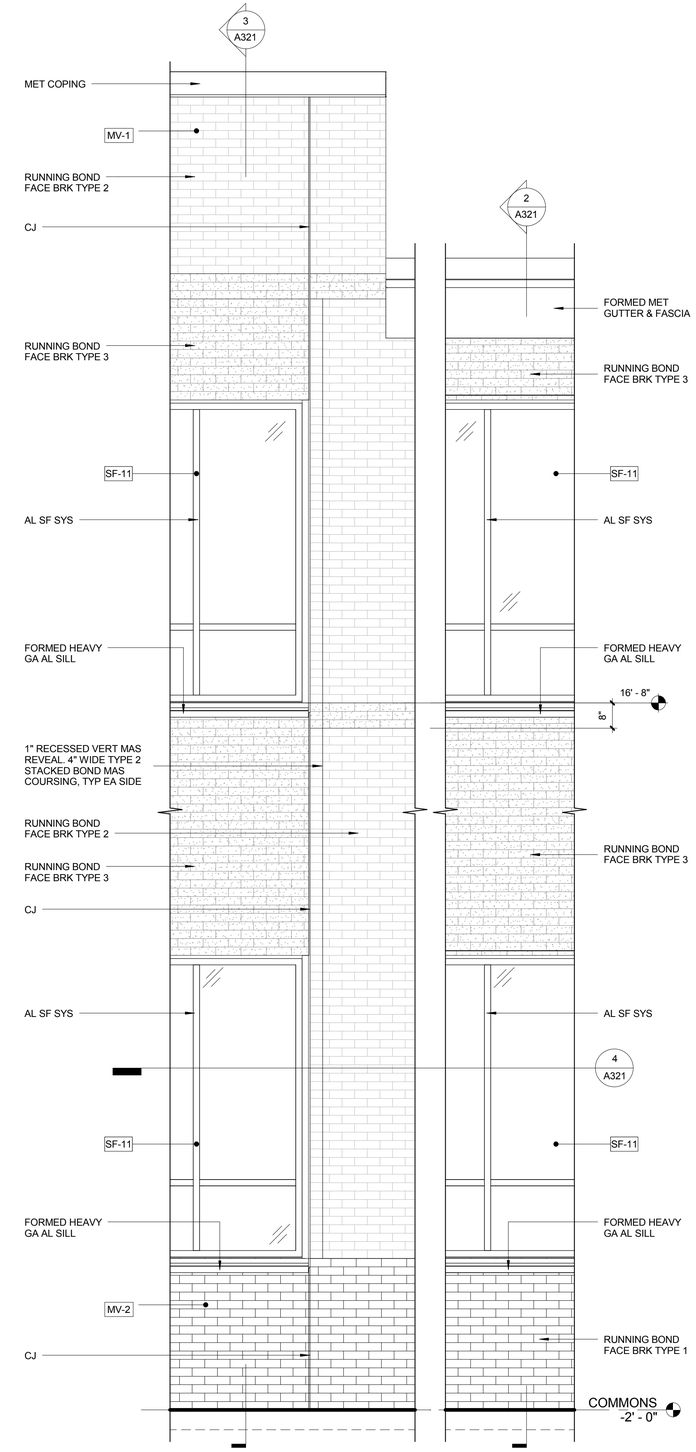

1 ENLARGED ELEV
SCALE: 1/2" = 1'-0"

0 1' 2' 4' 6'
SCALE AT FULL SIZE: 1/2" = 1'-0"

SYM	DESCRIPTION	DATE	APPR

NAVFAC

REGISTERED ARCHITECT PENNSYLVANIA KEITH G. FALLON RA-024120

SEAL

EWING COLE
Federal Reserve Bank Building
100 North 6th Street
Philadelphia, PA 19106-1590
Tel: 215-923-2020 Fax: 215-574-0952

A/E INFO

APPROVED

FOR COMMANDER NAVFAC
ACTIVITY

SATISFACTORY TO DATE
Designer KBM Checker
PM/DM
BRANCH MANAGER
CHIEF ENG/ ARCH
FIRE PROTECTION

DEPARTMENT OF THE NAVY
NAVAL FACILITIES ENGINEERING COMMAND ~ WASHINGTON
DoDEA
NAVAL FACILITIES ENGINEERING COMMAND
MARINE CORPS BASE QUANTICO, VIRGINIA
MARINE CORPS BASE QUANTICO
QUANTICO, VA

REPLACE QUANTICO M/H SCHOOL

WALL SECTIONS

SCALE: As indicated
PROJECT NO.: P-021
CONSTR. CONTR. NO. W91236-15-C-0023
NAVFAC DRAWING NO. 13090944
SHEET 190 OF 789
A321

DRAWFORM REVISION: 10 MARCH 2009

RTA SUBMISSION - 10/13/2016

GENERAL NOTES:

1. COORD DWG'S W/ INDIVIDUAL SPEC SECTIONS FOR GENERAL & SUPPLEMENTARY PROVISIONS TO THE CONTRACT DOCUMENTS.
2. FOR TYP EXT WALL & ROOF CONSTR, SEE SHEET A500
3. SEE A410-SERIES SHEETS FOR EXT CW & SF FRAME SCHEDULES
4. FOR DR SCHED, SEE SHEET A404
5. CENTER EXT WALL DEVICES ON BRK COURSING, UNO

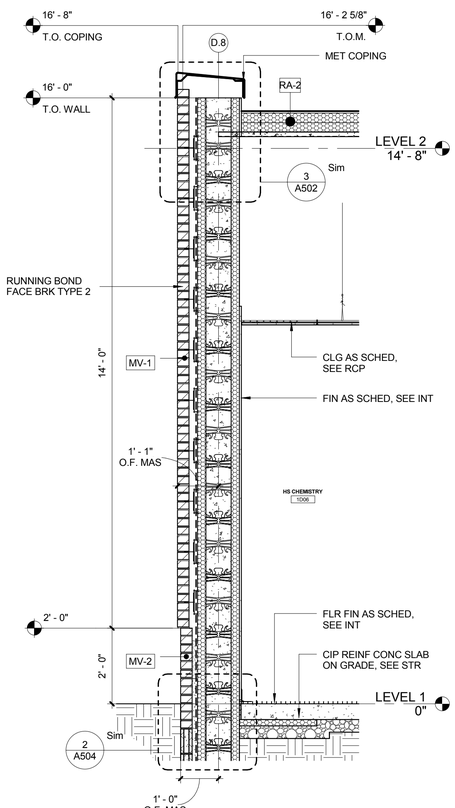

4 WALL SECTION
SCALE: 1/2" = 1'-0"

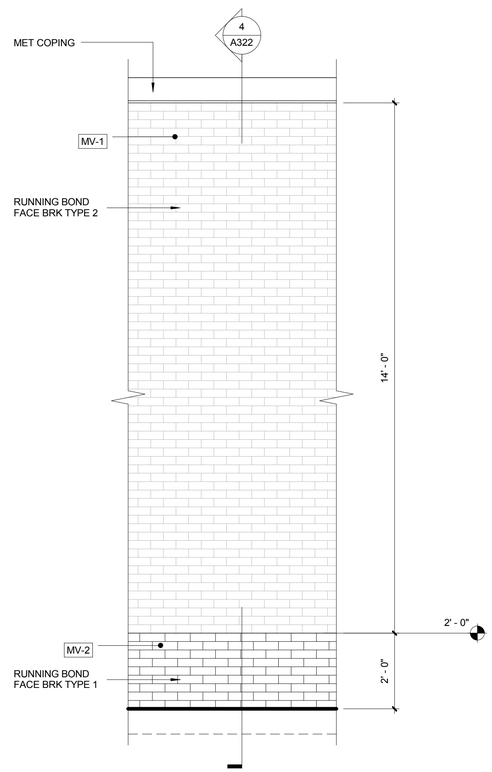

3 ENLARGED ELEV
SCALE: 1/2" = 1'-0"

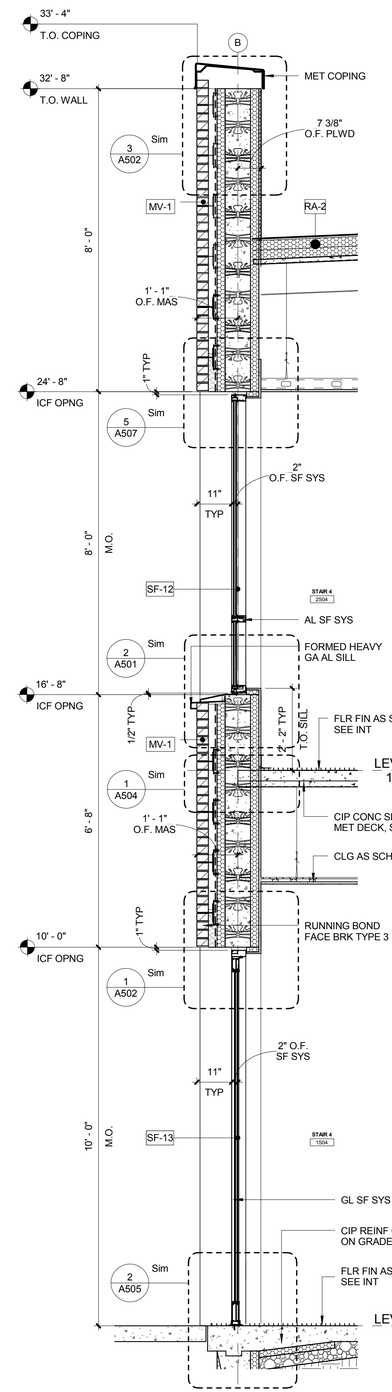

2 WALL SECTION
SCALE: 1/2" = 1'-0"

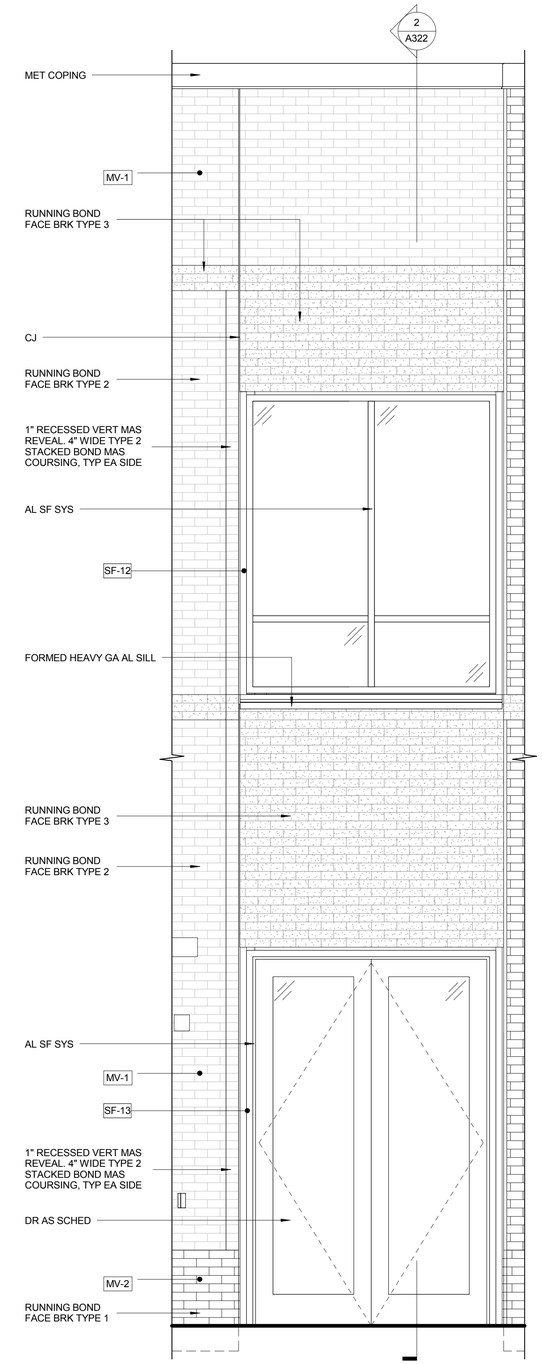

1 ENLARGED ELEV
SCALE: 1/2" = 1'-0"

0 1' 2' 4' 6'
SCALE AT FULL SIZE: 1/2" = 1'-0"

SYM	DESCRIPTION	DATE	APPR

NAVFAC

SEAL

EWING COLE
Federal Reserve Bank Building
100 North 6th Street
Philadelphia, PA 19106-1590
Tel: 215-923-2020 Fax: 215-574-0952

A/E INFO

APPROVED

FOR COMMANDER NAVFAC

ACTIVITY

SATISFACTORY TO DATE

Designer KBM Checker

PM/DM

BRANCH MANAGER

CHIEF ENG/ ARCH

FIRE PROTECTION

DEPARTMENT OF THE NAVY
NAVAL FACILITIES ENGINEERING COMMAND
DoDEA
NAVAL FACILITIES ENGINEERING COMMAND ~ WASHINGTON
MARINE CORPS BASE QUANTICO, VIRGINIA
MARINE CORPS BASE QUANTICO
QUANTICO, VA

REPLACE QUANTICO M/H SCHOOL

WALL SECTIONS

SCALE: As indicated

PROJECT NO.: P-021

CONSTR. CONTR. NO. W91236-15-C-0023

NAVFAC DRAWING NO. 13090945

SHEET 191 OF 789

A322

DRAWFORM REVISION: 10 MARCH 2009

RTA SUBMISSION - 10/13/2016

GENERAL NOTES:

1. COORD DWG'S W/ INDIVIDUAL SPEC SECTIONS FOR GENERAL & SUPPLEMENTARY PROVISIONS TO THE CONTRACT DOCUMENTS.
2. FOR TYP EXT WALL & ROOF CONSTR, SEE SHEET A500
3. SEE A410-SERIES SHEETS FOR EXT CW & SF FRAME SCHEDULES
4. FOR DR SCHED, SEE SHEET A404
5. CENTER EXT WALL DEVICES ON BRK COURSING, UNO

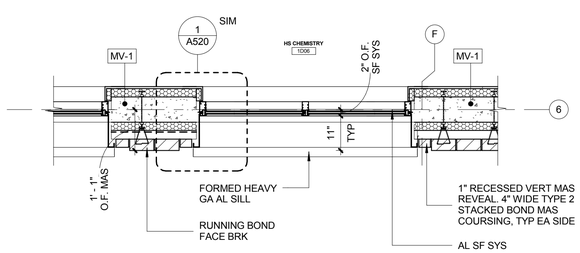

3 PLAN SECTION
SCALE: 1/2" = 1'-0"

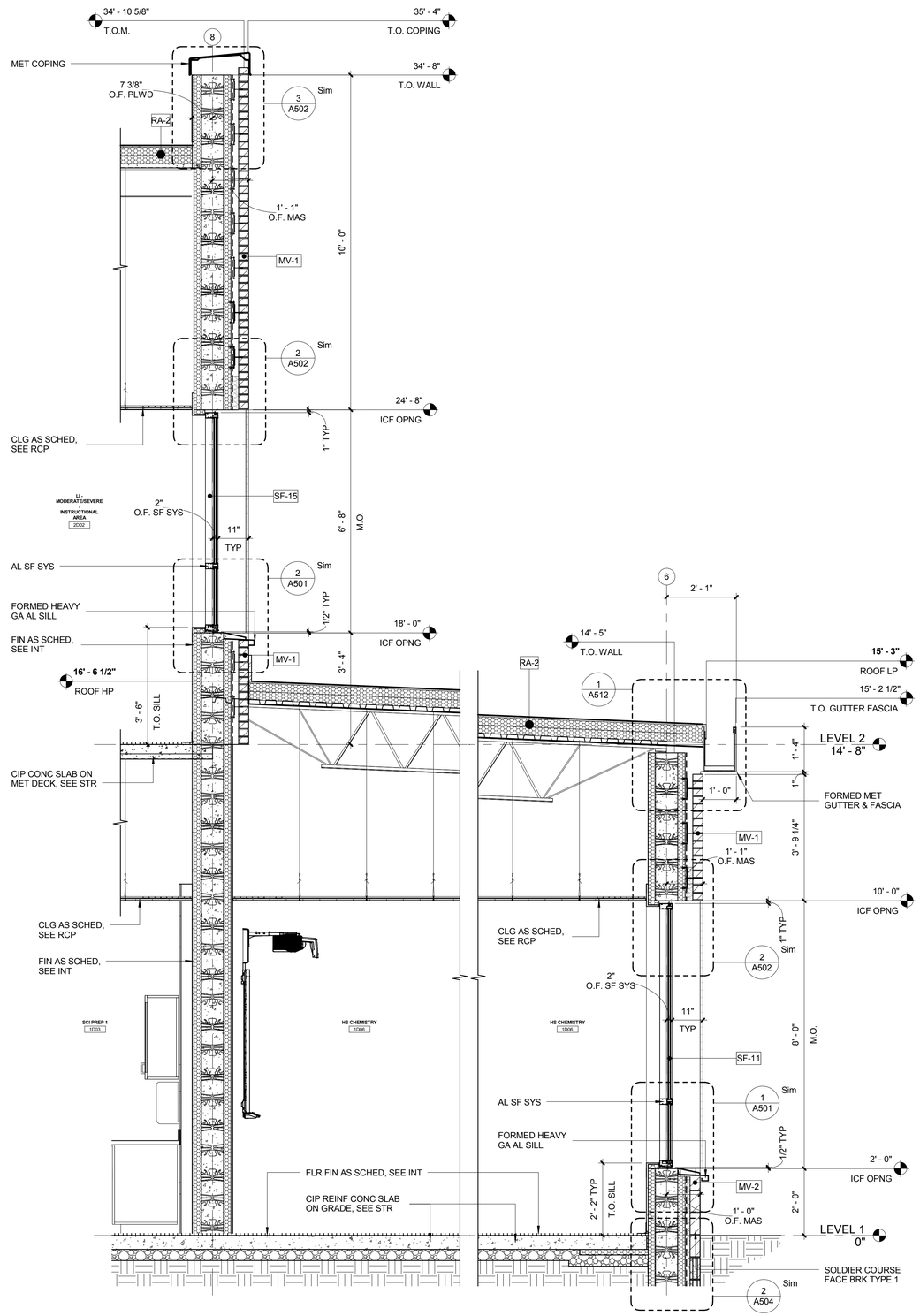

2 WALL SECTION
SCALE: 1/2" = 1'-0"

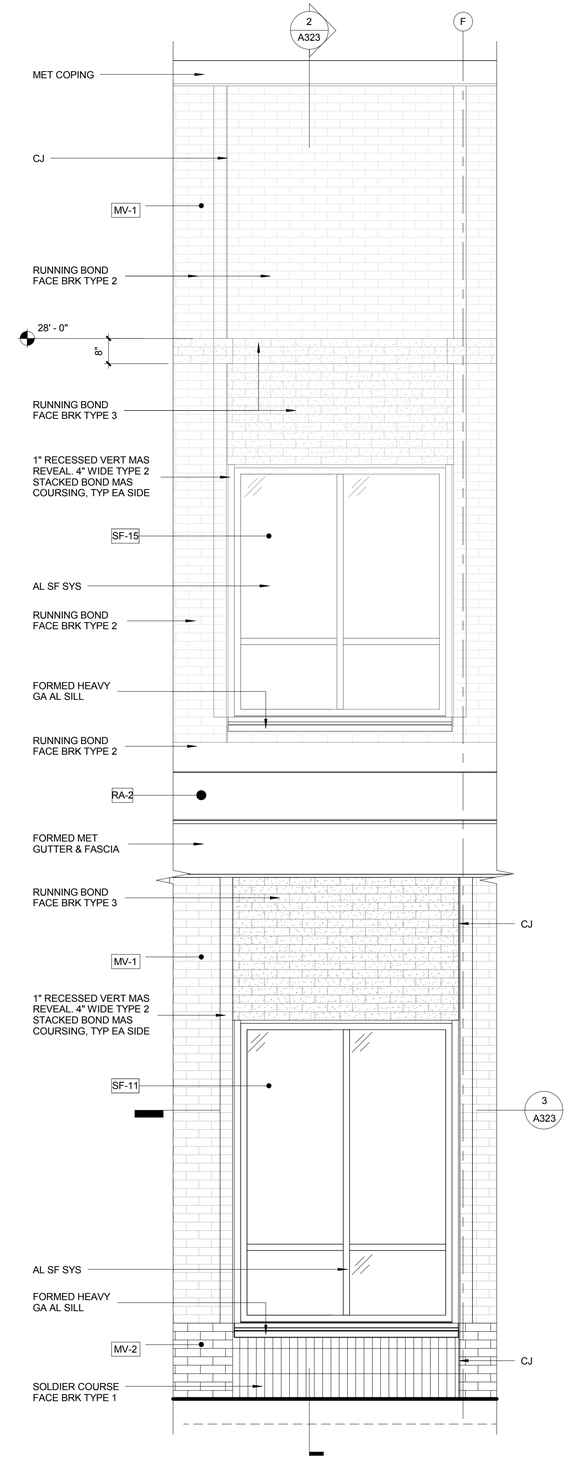

1 ENLARGED ELEV
SCALE: 1/2" = 1'-0"

0 1' 2' 4' 6'
SCALE AT FULL SIZE: 1/2" = 1'-0"

SYM	DESCRIPTION	DATE	APPR

NAVFAC

REGISTERED ARCHITECT PENNSYLVANIA KEITH G. FALLON RA-024122

SEAL

EWING COLE
Federal Reserve Bank Building
100 North 6th Street
Philadelphia, PA 19106-1590
Tel: 215-923-2020 Fax: 215-574-0952

A/E INFO

APPROVED

FOR COMMANDER NAVFAC
ACTIVITY

SATISFACTORY TO DATE
Designer KBM Checker
PM/DM
BRANCH MANAGER
CHIEF ENG/ ARCH
FIRE PROTECTION

DEPARTMENT OF THE NAVY
NAVAL FACILITIES ENGINEERING COMMAND
DoDEA
NAVAL FACILITIES ENGINEERING COMMAND ~ WASHINGTON
MARINE CORPS BASE QUANTICO, VIRGINIA
MARINE CORPS BASE QUANTICO
QUANTICO, VA
REPLACE QUANTICO M/H SCHOOL
WALL SECTIONS

SCALE: As indicated
PROJECT NO.: P-021
CONSTR. CONTR. NO.
W91236-15-C-0023
NAVFAC DRAWING NO.
13090946
SHEET 192 OF 789
A323

DRAWFORM REVISION: 10 MARCH 2009

RTA SUBMISSION - 10/13/2016

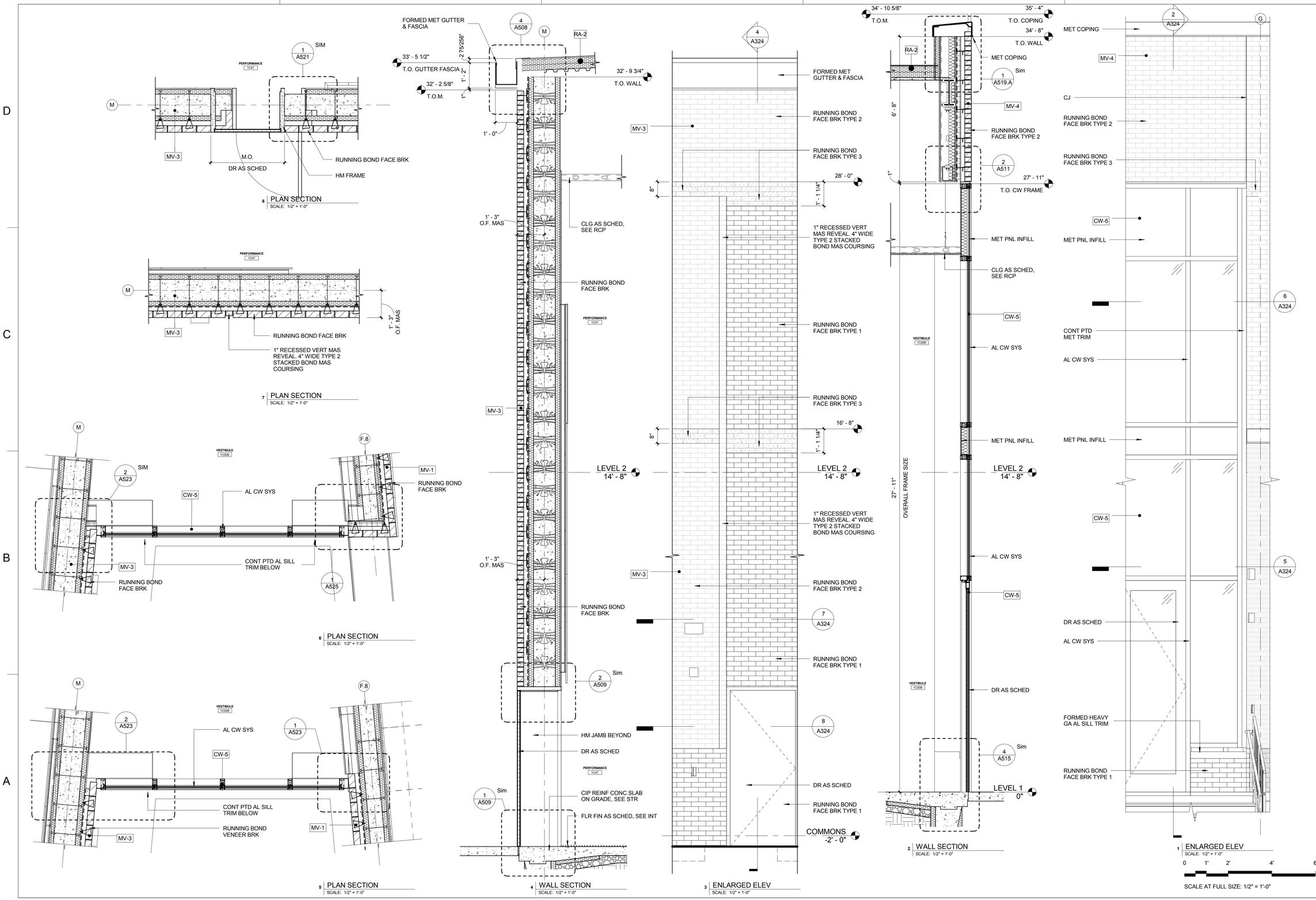

RTA SUBMISSION - 10/13/2016

GENERAL NOTES:

1. COORD DWG'S W/ INDIVIDUAL SPEC SECTIONS FOR GENERAL & SUPPLEMENTARY PROVISIONS TO THE CONTRACT DOCUMENTS.
2. FOR TYP EXT WALL & ROOF CONSTR, SEE SHEET A500
3. SEE A410-SERIES SHEETS FOR EXT CW & SF FRAME SCHEDULES
4. FOR DR SCHED, SEE SHEET A404
5. CENTER EXT WALL DEVICES ON BRK COURSING, UNO

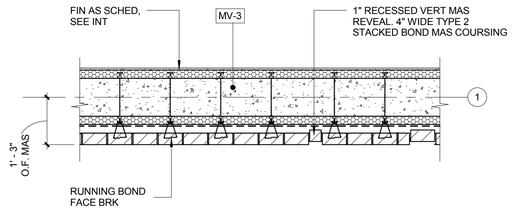

5 PLAN SECTION
SCALE: 1/2" = 1'-0"

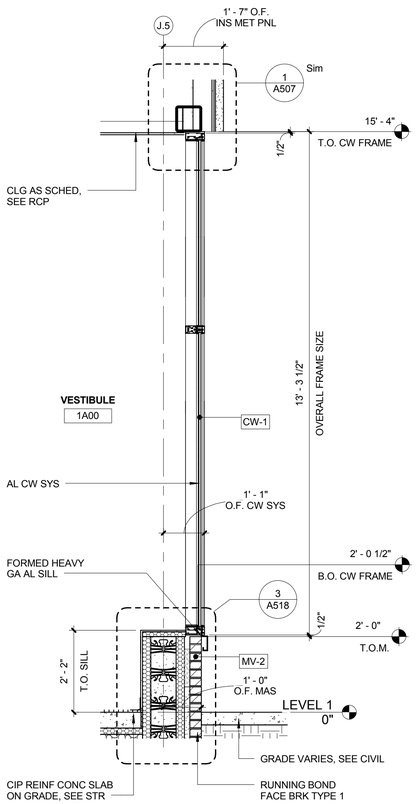

4 WALL SECTION
SCALE: 1/2" = 1'-0"

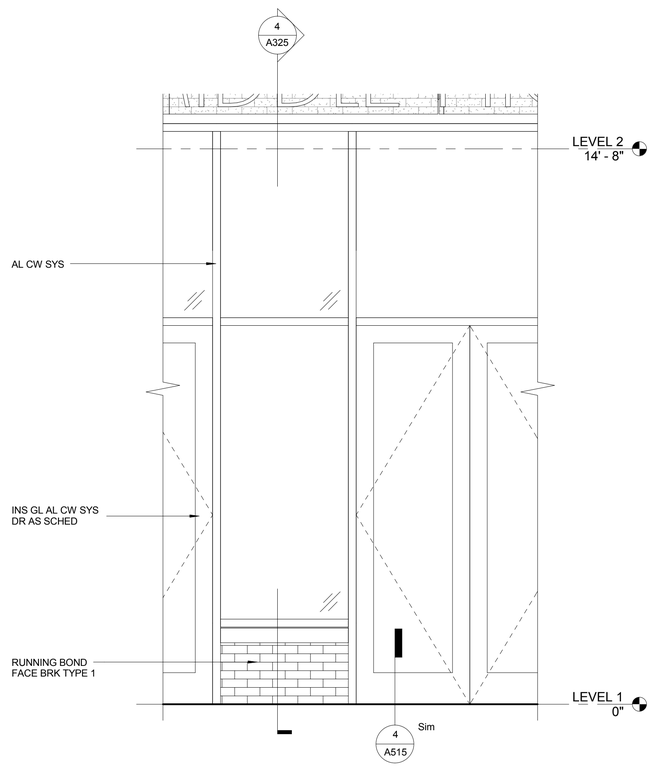

3 ENLARGED ELEV
SCALE: 1/2" = 1'-0"

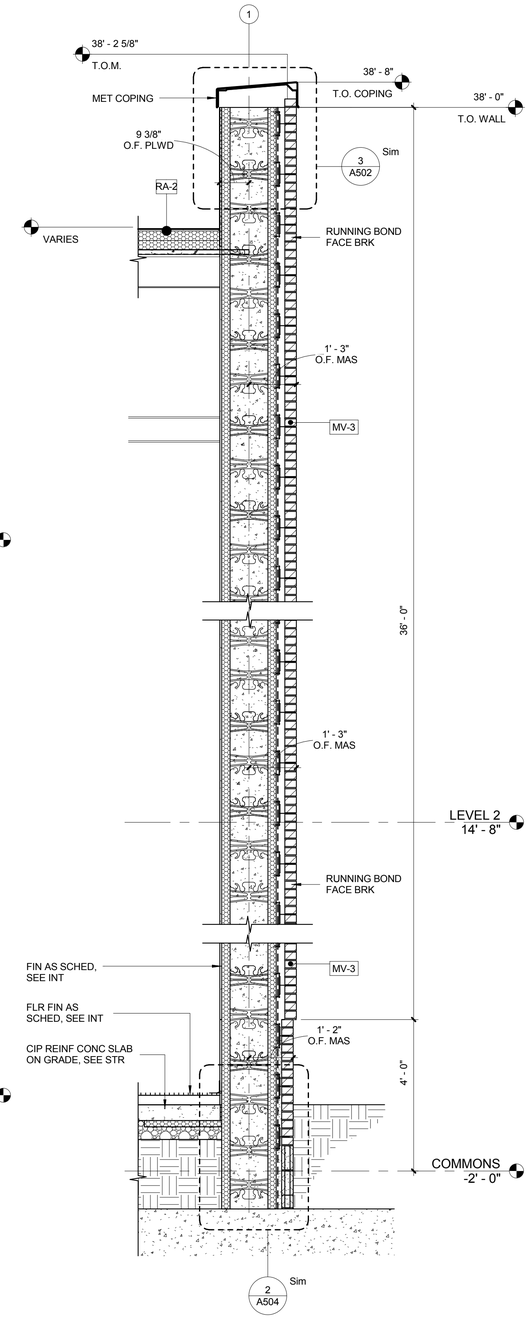

2 WALL SECTION
SCALE: 1/2" = 1'-0"

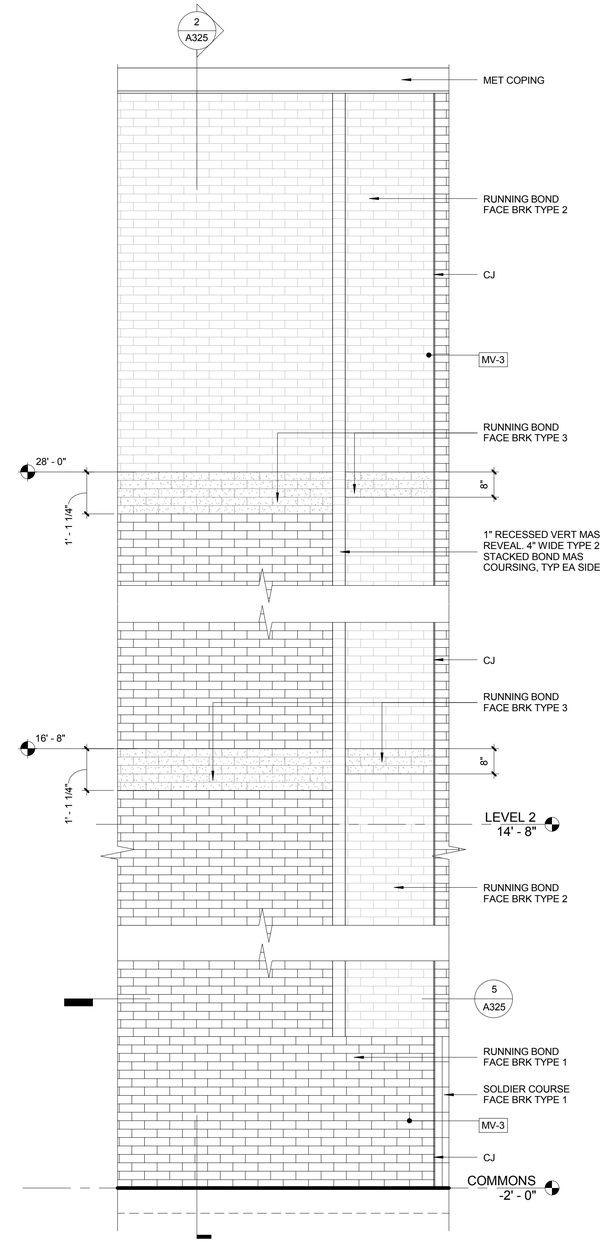

1 ENLARGED ELEV
SCALE: 1/2" = 1'-0"

0 1' 2' 4' 6'
SCALE AT FULL SIZE: 1/2" = 1'-0"

RTA SUBMISSION - 10/13/2016

SYM	DESCRIPTION	DATE	APPR

NAVFAC

REGISTERED ARCHITECT PENNSYLVANIA KEITH G. FALLON RA-024122

SEAL

EWING COLE
Federal Reserve Bank Building
100 North 6th Street
Philadelphia, PA 19106-1590
Tel: 215-923-2020 Fax: 215-574-0952

A/E INFO

APPROVED

FOR COMMANDER NAVFAC
ACTIVITY

SATISFACTORY TO DATE

Designer KBM Checker

PM/DM

BRANCH MANAGER

CHIEF ENG/ ARCH

FIRE PROTECTION

DEPARTMENT OF THE NAVY
NAVAL FACILITIES ENGINEERING COMMAND
NAVAL FACILITES ENGINEERING COMMAND ~ WASHINGTON
DoDEA
MARINE CORPS BASE QUANTICO
MARINE CORPS BASE QUANTICO, VIRGINIA
QUANTICO, VA

REPLACE QUANTICO M/H SCHOOL

WALL SECTIONS

SCALE:	As indicated
PROJECT NO.:	P-021
CONSTR. CONTR. NO.	W91236-15-C-0023
NAVFAC DRAWING NO.	13090948
SHEET	194 OF 789
	A325

DRAWFORM REVISION: 10 MARCH 2009

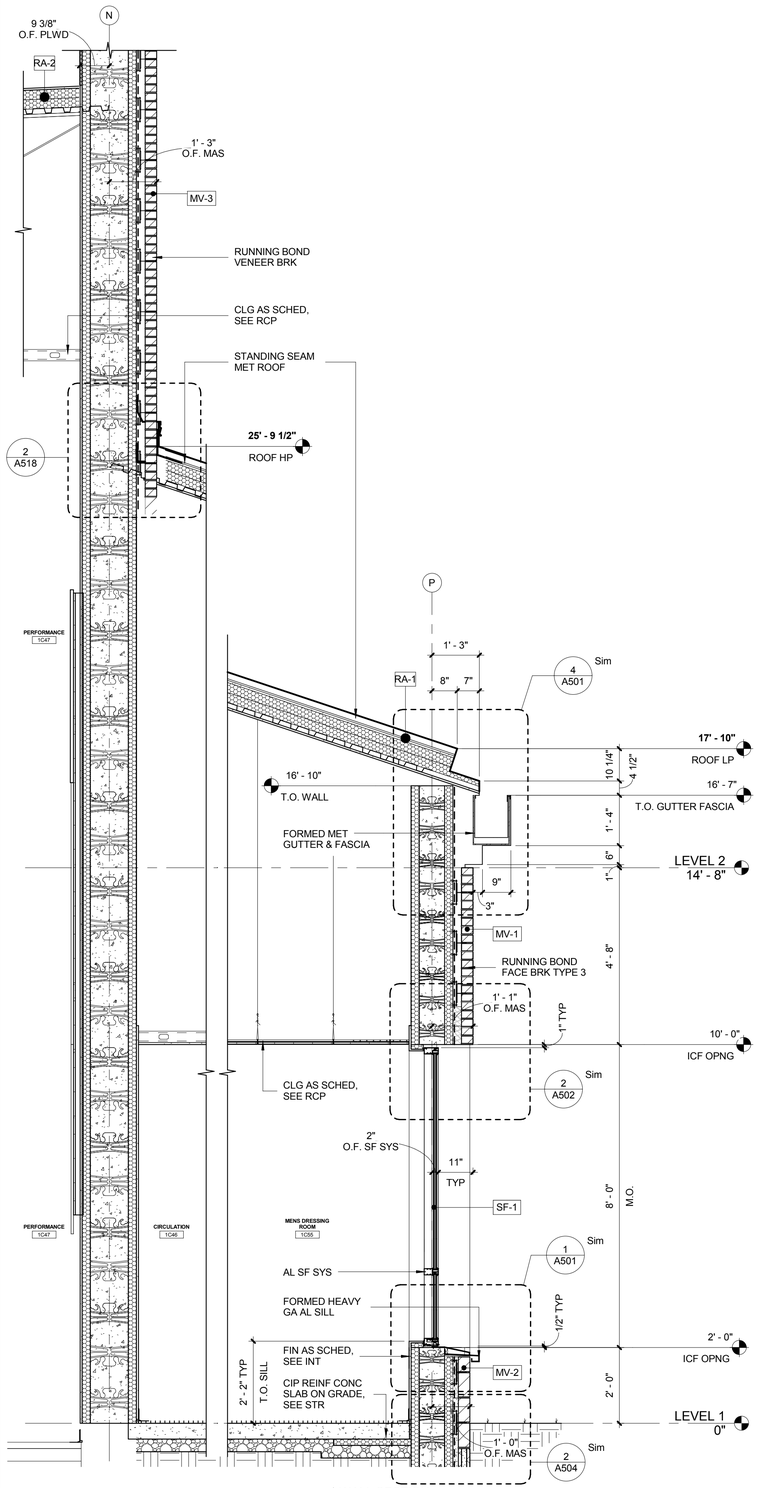

5 WALL SECTION
SCALE: 1/2" = 1'-0"

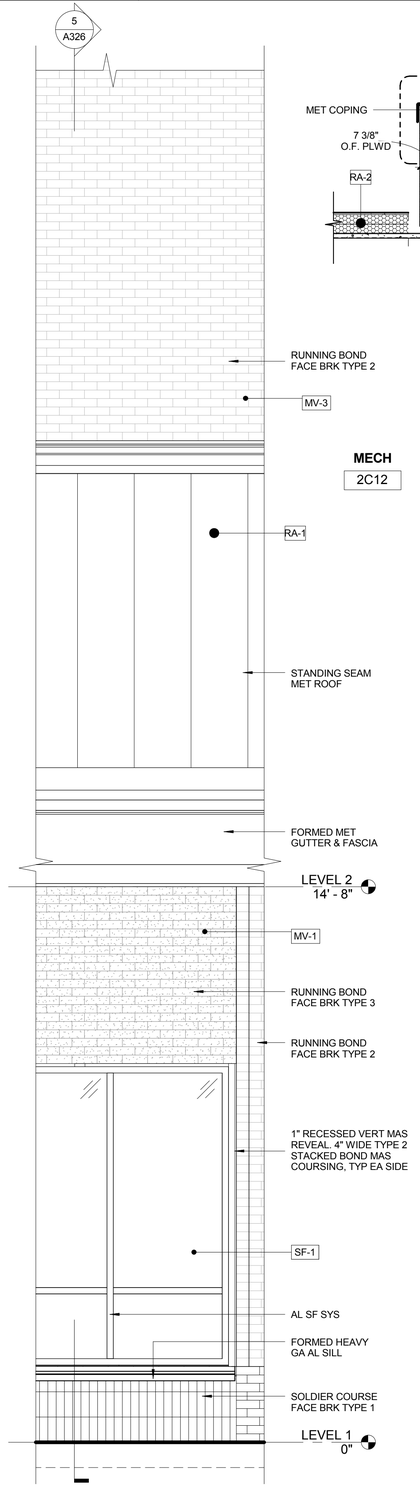

4 ENLARGED ELEV
SCALE: 1/2" = 1'-0"

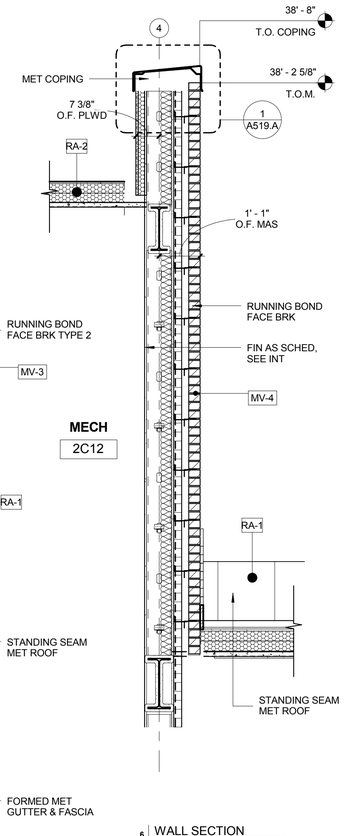

6 WALL SECTION
SCALE: 1/2" = 1'-0"

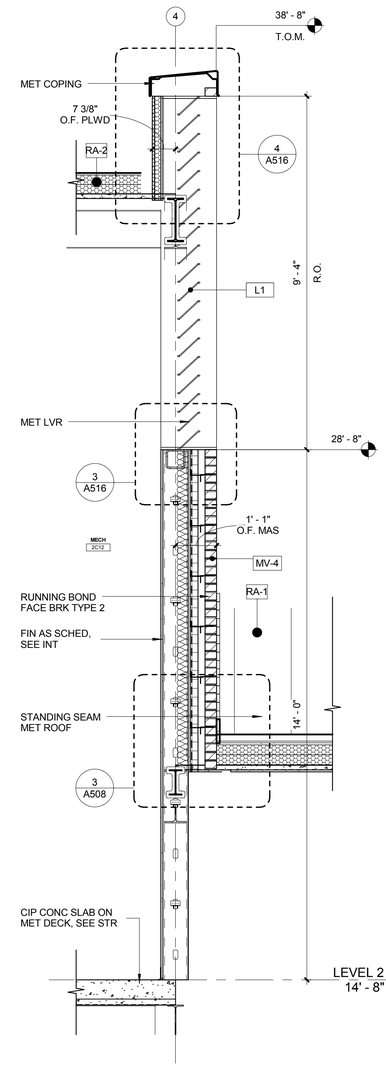

3 WALL SECTION
SCALE: 1/2" = 1'-0"

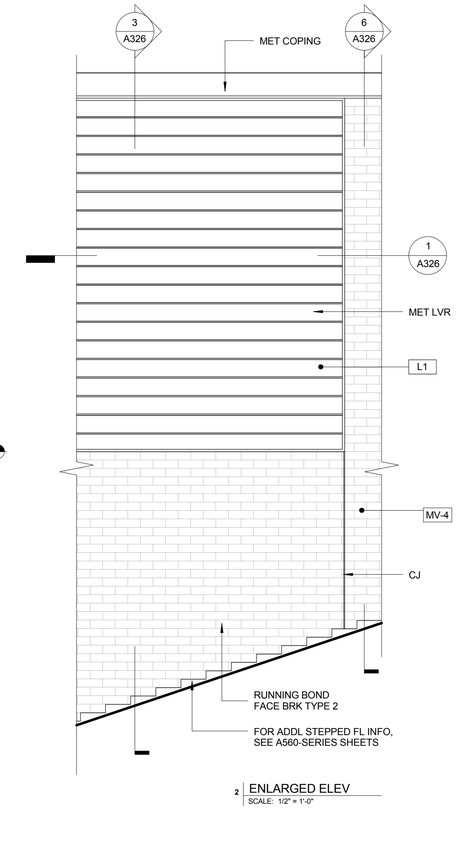

2 ENLARGED ELEV
SCALE: 1/2" = 1'-0"

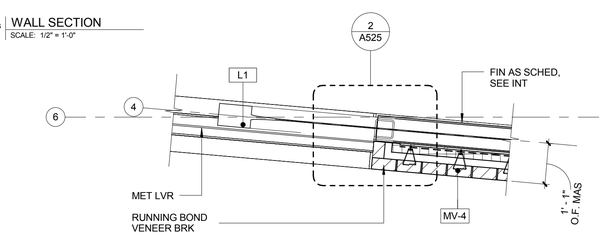

1 PLAN SECTION
SCALE: 1/2" = 1'-0"

0 1' 2' 4' 6'

SCALE AT FULL SIZE: 1/2" = 1'-0"

SYM	DESCRIPTION	DATE	APPR

NAVFAC

REGISTERED ARCHITECT PENNSYLVANIA KEITH G. FALLON RA-024122

SEAL

EWING COLE
Federal Reserve Bank Building
100 North 6th Street
Philadelphia, PA 19106-1590
Tel: 215-923-2020 Fax: 215-574-0952

A/E INFO

APPROVED

FOR COMMANDER NAVFAC
ACTIVITY

SATISFACTORY TO DATE

Designer KBM Checker
PM/DM
BRANCH MANAGER
CHIEF ENG/ ARCH
FIRE PROTECTION

DEPARTMENT OF THE NAVY
DoDEA
NAVAL FACILITIES ENGINEERING COMMAND ~ WASHINGTON
NAVAL FACILITES ENGINEERING COMMAND
MARINE CORPS BASE QUANTICO, VIRGINIA
MARINE CORPS BASE QUANTICO
QUANTICO, VA

REPLACE QUANTICO M/H SCHOOL

WALL SECTIONS

SCALE: 1/2" = 1'-0"
PROJECT NO.: P-021
CONSTR. CONTR. NO. W91236-15-C-0023
NAVFAC DRAWING NO. 13090949
SHEET 195 OF 789
A326

DRAWFORM REVISION: 10 MARCH 2009

RTA SUBMISSION - 10/13/2016

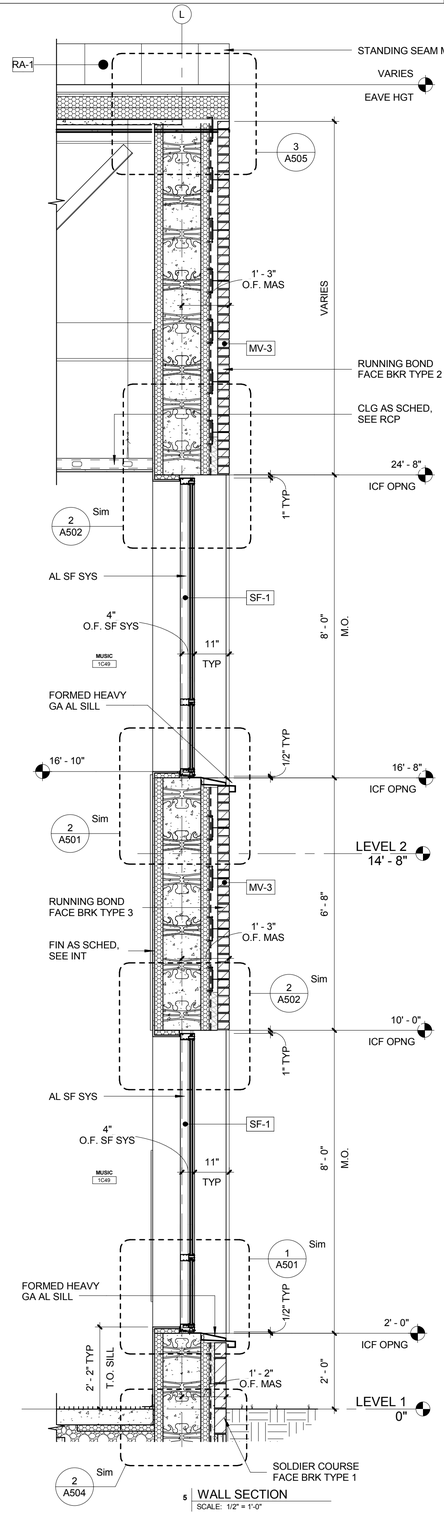

5 WALL SECTION
SCALE: 1/2" = 1'-0"

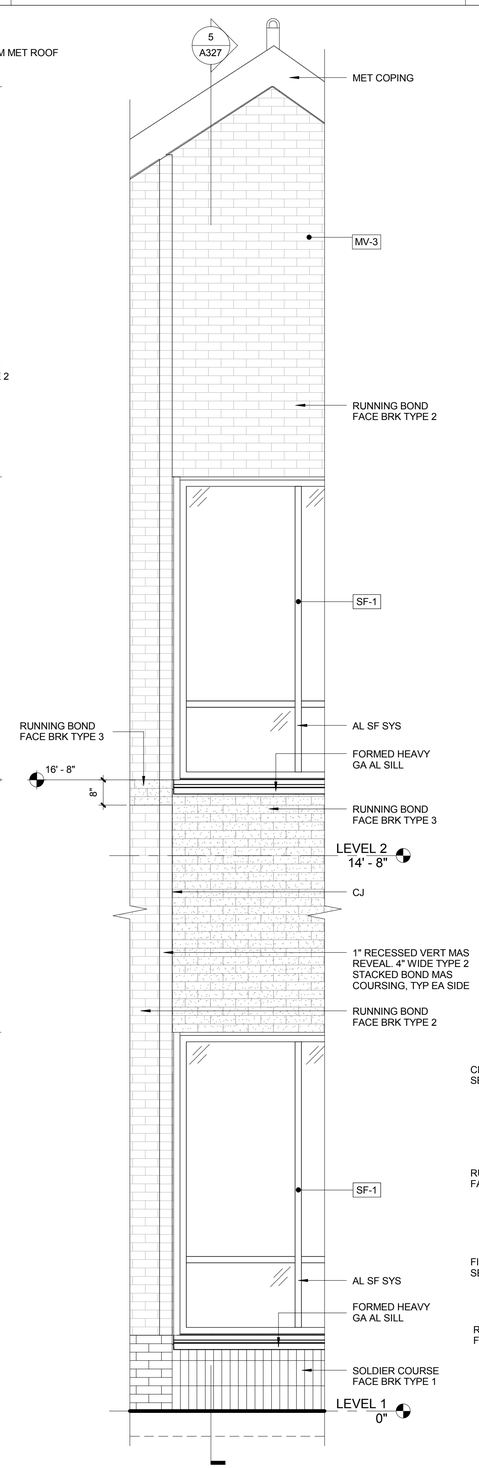

4 ENLARGED ELEV
SCALE: 1/2" = 1'-0"

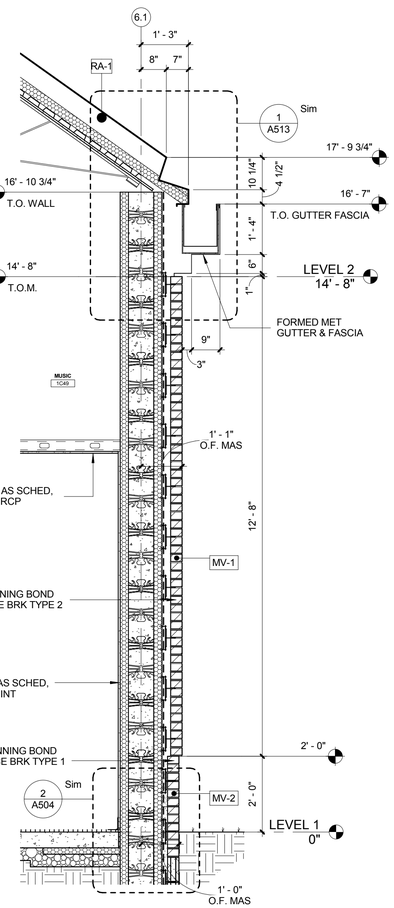

3 WALL SECTION
SCALE: 1/2" = 1'-0"

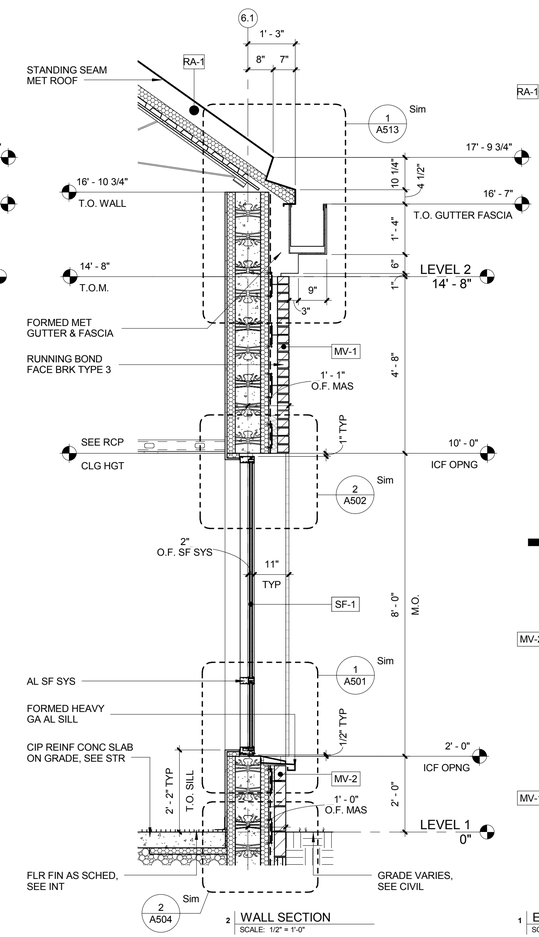

2 WALL SECTION
SCALE: 1/2" = 1'-0"

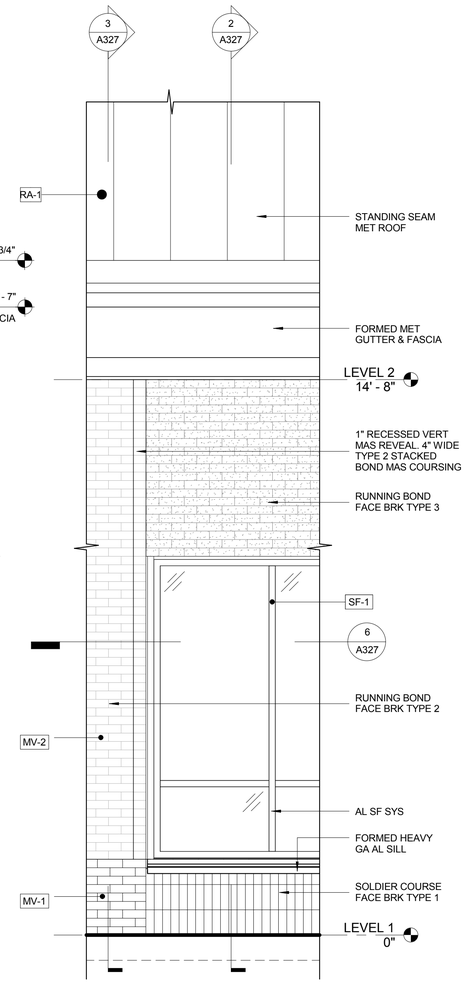

1 ENLARGED ELEV
SCALE: 1/2" = 1'-0"

0 2' 4' 8' 16' 32'
SCALE AT FULL SIZE: 1/8" = 1'-0"

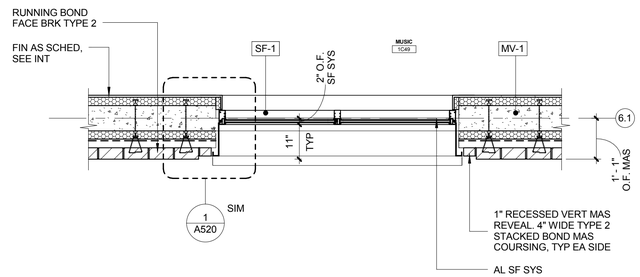

6 PLAN SECTION
SCALE: 1/2" = 1'-0"

GENERAL NOTES:

1. COORD DWG'S W/ INDIVIDUAL SPEC SECTIONS FOR GENERAL & SUPPLEMENTARY PROVISIONS TO THE CONTRACT DOCUMENTS.
2. FOR TYP EXT WALL & ROOF CONSTR, SEE SHEET A500
3. SEE A410-SERIES SHEETS FOR EXT CW & SF FRAME SCHEDULES
4. FOR DR SCHED, SEE SHEET A404
5. CENTER EXT WALL DEVICES ON BRK COURSING, UNO

SYM	DESCRIPTION	DATE	APPR

NAVFAC

REGISTERED ARCHITECT PENNSYLVANIA KEITH G. FALLON RA-024316

SEAL

EWING COLE
Federal Reserve Bank Building
100 North 6th Street
Philadelphia, PA 19106-1590
Tel: 215-923-2020 Fax: 215-574-0952

A/E INFO

APPROVED

FOR COMMANDER NAVFAC
ACTIVITY

SATISFACTORY TO DATE

Designer KBM Checker
PM/DM
BRANCH MANAGER
CHIEF ENG/ ARCH
FIRE PROTECTION

DEPARTMENT OF THE NAVY
NAVAL FACILITES ENGINEERING COMMAND ~ WASHINGTON
DoDEA
MARINE CORPS BASE QUANTICO, VIRGINIA
QUANTICO, VA

REPLACE QUANTICO M/H SCHOOL

WALL SECTIONS

SCALE:	As indicated
PROJECT NO.:	P-021
CONSTR. CONTR. NO.	W91236-15-C-0023
NAVFAC DRAWING NO.	13090950
SHEET	196 OF 789

A327

DRAWFORM REVISION: 10 MARCH 2009

RTA SUBMISSION - 10/13/2016

GENERAL NOTES:

1. COORD DWG'S W/ INDIVIDUAL SPEC SECTIONS FOR GENERAL & SUPPLEMENTARY PROVISIONS TO THE CONTRACT DOCUMENTS.
2. FOR TYP EXT WALL & ROOF CONSTR, SEE SHEET A500
3. SEE A410-SERIES SHEETS FOR EXT CW & SF FRAME SCHEDULES
4. FOR DR SCHED, SEE SHEET A404
5. CENTER EXT WALL DEVICES ON BRK COURSING, UNO

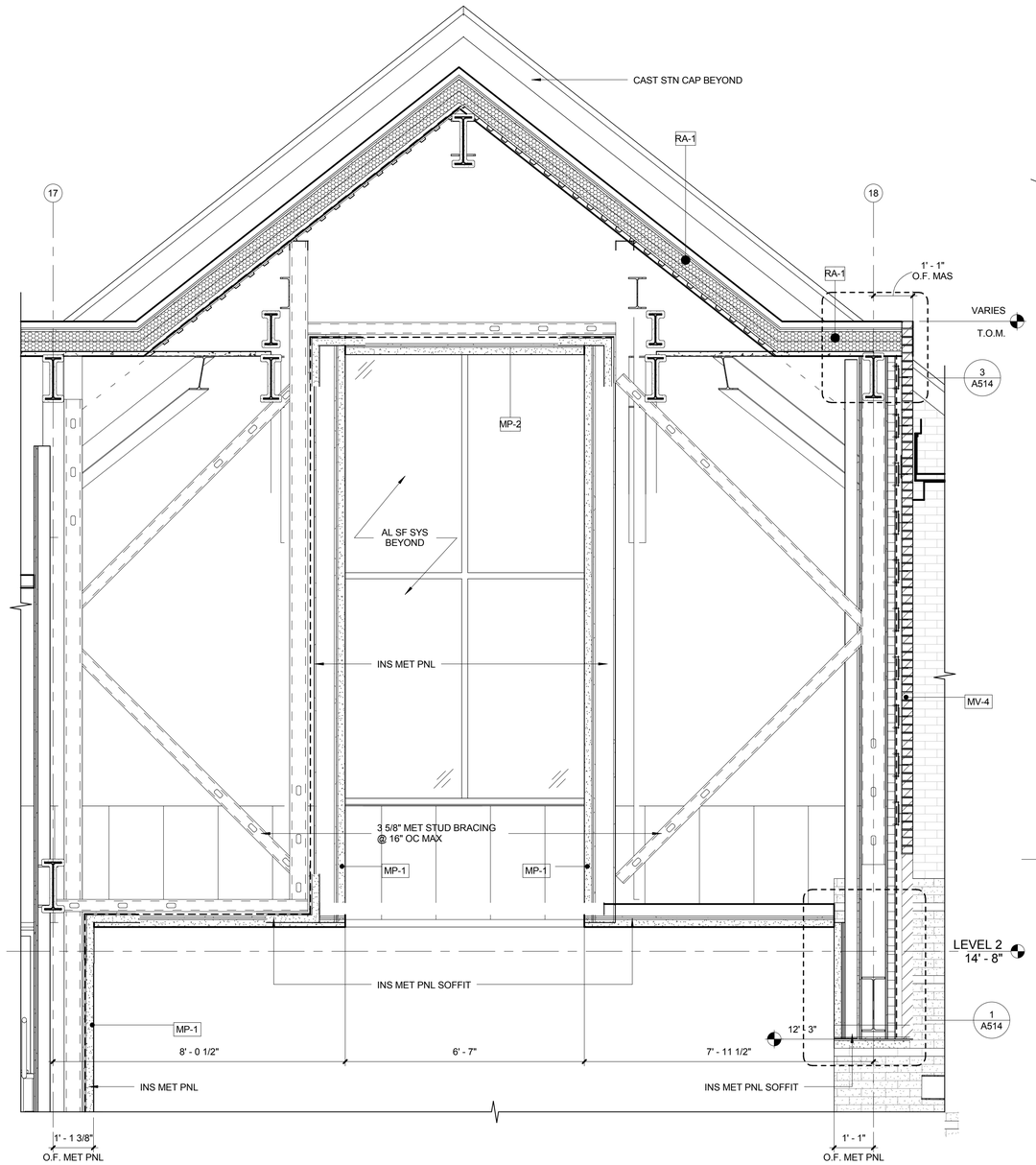

4 WALL SECTION
SCALE: 1/2" = 1'-0"

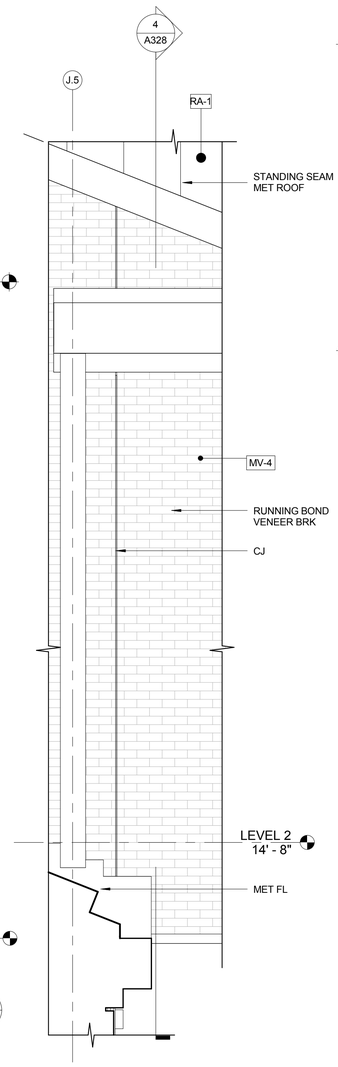

3 ENLARGED ELEV
SCALE: 1/2" = 1'-0"

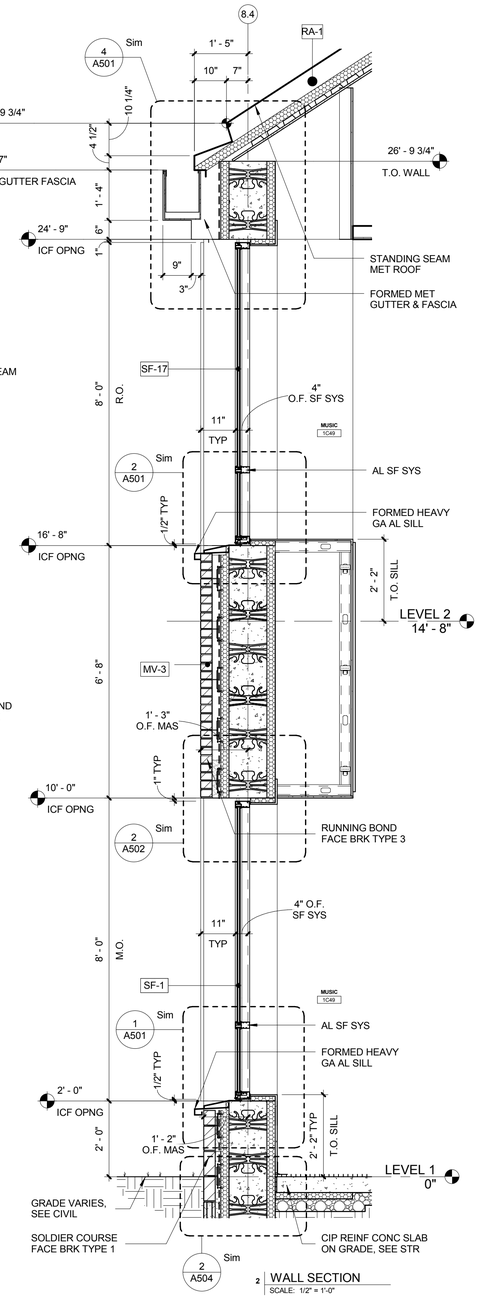

2 WALL SECTION
SCALE: 1/2" = 1'-0"

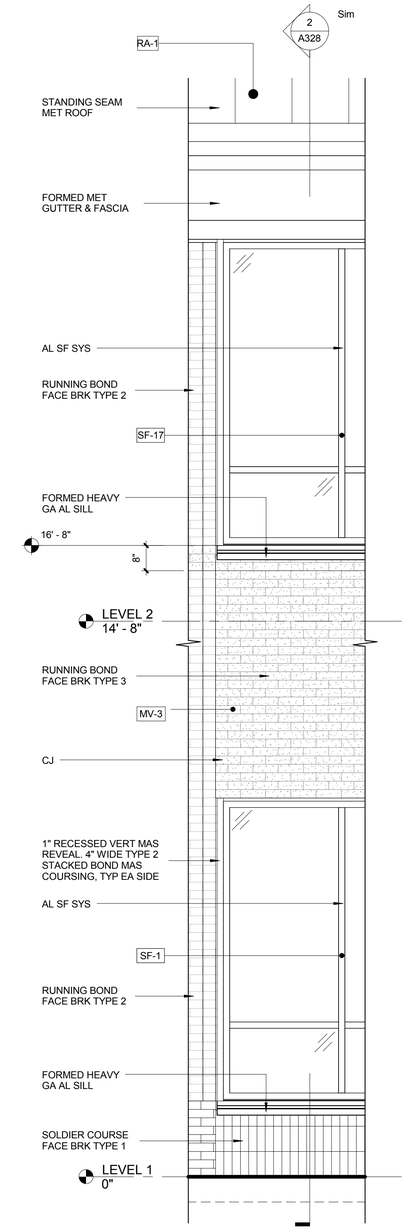

1 ENLARGED ELEV
SCALE: 1/2" = 1'-0"

0 1' 2' 4' 6'
SCALE AT FULL SIZE: 1/2" = 1'-0"

SYM	DESCRIPTION	DATE	APPR

NAVFAC

REGISTERED ARCHITECT PENNSYLVANIA KEITH G. FALLON RA-025429

SEAL

EWING COLE
Federal Reserve Bank Building
100 North 6th Street
Philadelphia, PA 19106-1590
Tel: 215-923-2020 Fax: 215-574-0952
A/E INFO

APPROVED

FOR COMMANDER NAVFAC ACTIVITY

SATISFACTORY TO DATE

Designer KBM Checker

PM/DM

BRANCH MANAGER

CHIEF ENG/ ARCH

FIRE PROTECTION

DEPARTMENT OF THE NAVY
NAVAL FACILITIES ENGINEERING COMMAND
DoDEA
NAVAL FACILITIES ENGINEERING COMMAND ~ WASHINGTON
MARINE CORPS BASE QUANTICO
MARINE CORPS BASE QUANTICO, VIRGINIA
QUANTICO, VA

REPLACE QUANTICO M/H SCHOOL

WALL SECTIONS

SCALE: As indicated
PROJECT NO.: P-021
CONSTR. CONTR. NO. W91236-15-C-0023
NAVFAC DRAWING NO. 13090951
SHEET 197 OF 789
A328

DRAWFORM REVISION: 10 MARCH 2009

RTA SUBMISSION - 10/13/2016

GENERAL NOTES:

1. COORD DWG'S W/ INDIVIDUAL SPEC SECTIONS FOR GENERAL & SUPPLEMENTARY PROVISIONS TO THE CONTRACT DOCUMENTS.
2. FOR TYP EXT WALL & ROOF CONSTR, SEE SHEET A500
3. SEE A410-SERIES SHEETS FOR EXT CW & SF FRAME SCHEDULES
4. FOR DR SCHED, SEE SHEET A404
5. CENTER EXT WALL DEVICES ON BRK COURSING, UNO

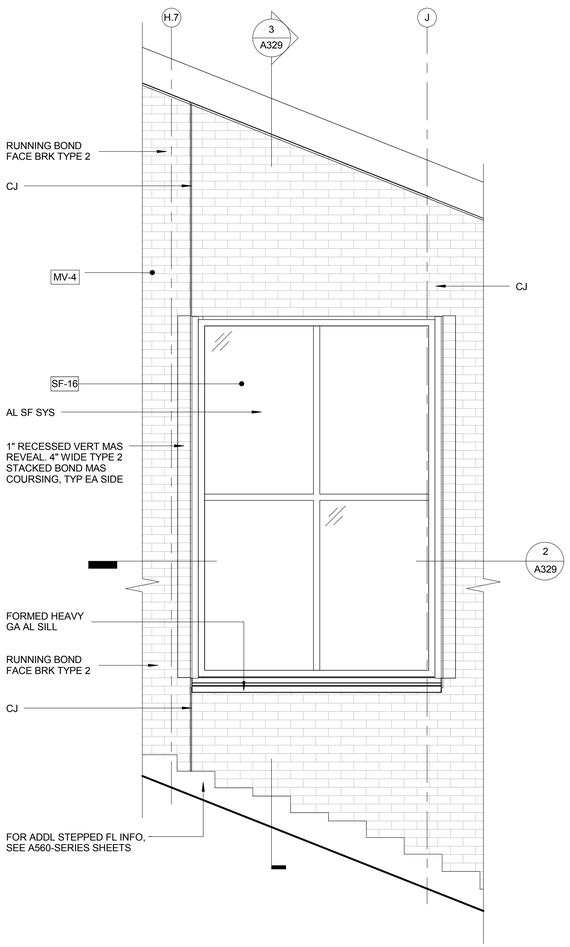

4 ENLARGED ELEVATION
SCALE: 1/2" = 1'-0"

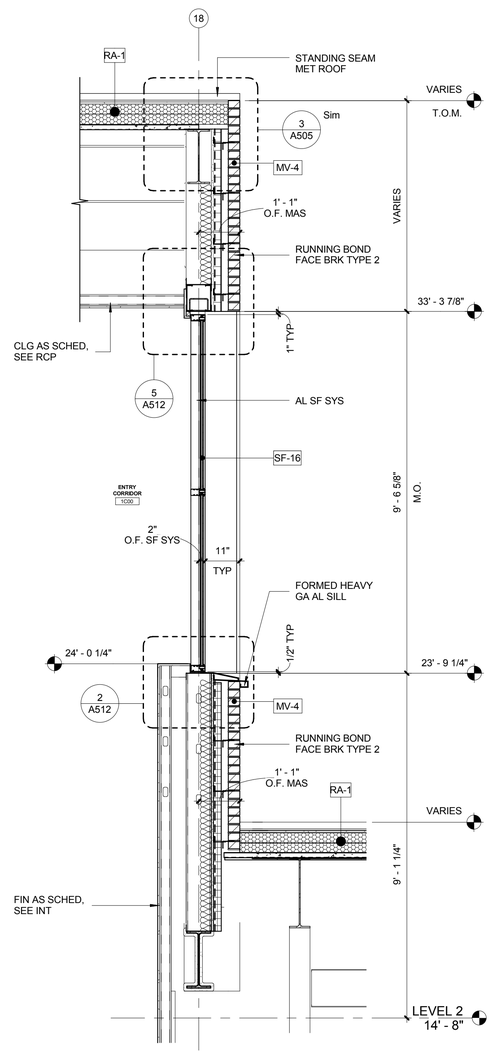

3 WALL SECTION
SCALE: 1/2" = 1'-0"

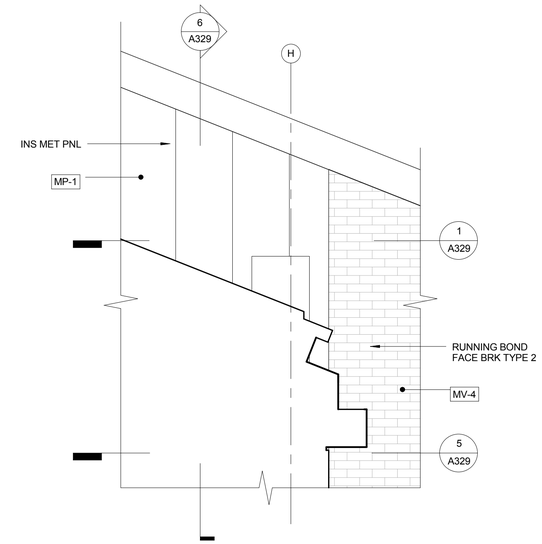

7 ENLARGED ELEV
SCALE: 1/2" = 1'-0"

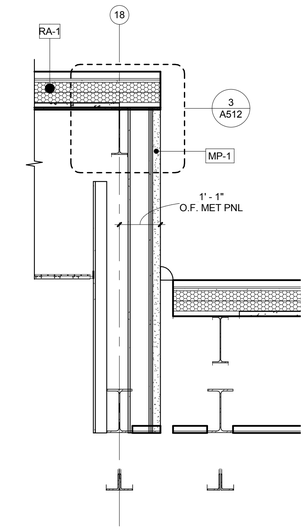

6 WALL SECTION
SCALE: 1/2" = 1'-0"

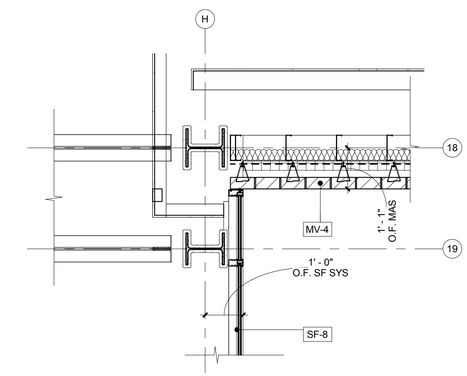

5 PLAN SECTION
SCALE: 1/2" = 1'-0"

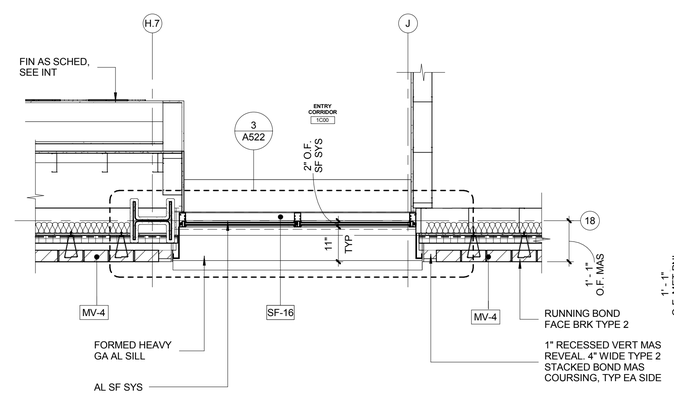

2 PLAN SECTION
SCALE: 1/2" = 1'-0"

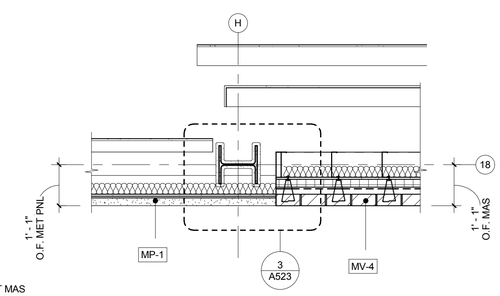

1 PLAN SECTION
SCALE: 1/2" = 1'-0"

0 1' 2' 4' 6'
SCALE AT FULL SIZE: 1/2" = 1'-0"

SYM	DESCRIPTION	DATE	APPR

NAVFAC

REGISTERED ARCHITECT PENNSYLVANIA KEITH G. FALLON RA-024122

SEAL

EWING COLE
Federal Reserve Bank Building
100 North 6th Street
Philadelphia, PA 19106-1590
Tel: 215-923-2020 Fax: 215-574-0952

A/E INFO

APPROVED

FOR COMMANDER NAVFAC
ACTIVITY

SATISFACTORY TO DATE

Designer KBM Checker

PM/DM

BRANCH MANAGER

CHIEF ENG/ ARCH

FIRE PROTECTION

DEPARTMENT OF THE NAVY
NAVAL FACILITIES ENGINEERING COMMAND
DoDEA

NAVAL FACILITIES ENGINEERING COMMAND ~ WASHINGTON
MARINE CORPS BASE QUANTICO, VIRGINIA

MARINE CORPS BASE QUANTICO
QUANTICO, VA

REPLACE QUANTICO M/H SCHOOL

WALL SECTIONS

SCALE: As indicated
PROJECT NO.: P-021
CONSTR. CONTR. NO.
W91236-15-C-0023
NAVFAC DRAWING NO.
13090952
SHEET 198 OF 789
A329

DRAWFORM REVISION: 10 MARCH 2009

RTA SUBMISSION - 10/13/2016

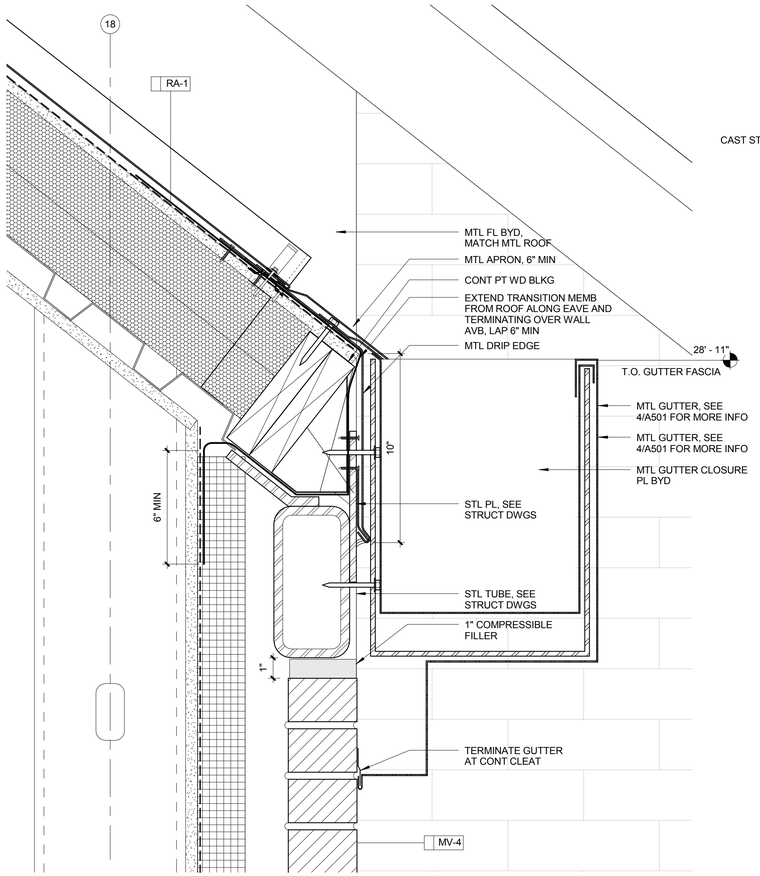

7 GUTTER DETAIL AT ENTRANCE EAVE
SCALE: 3" = 1'-0"

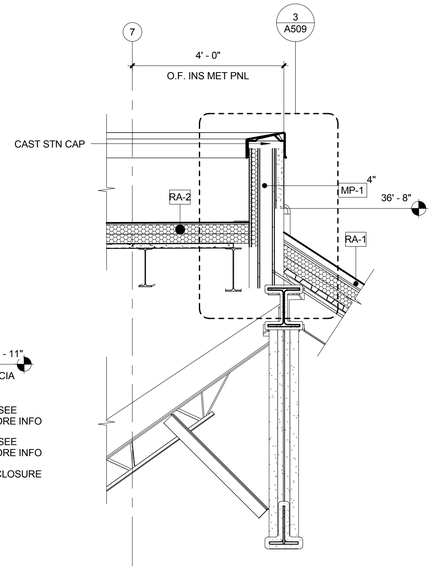

6 WALL SECTION
SCALE: 1/2" = 1'-0"

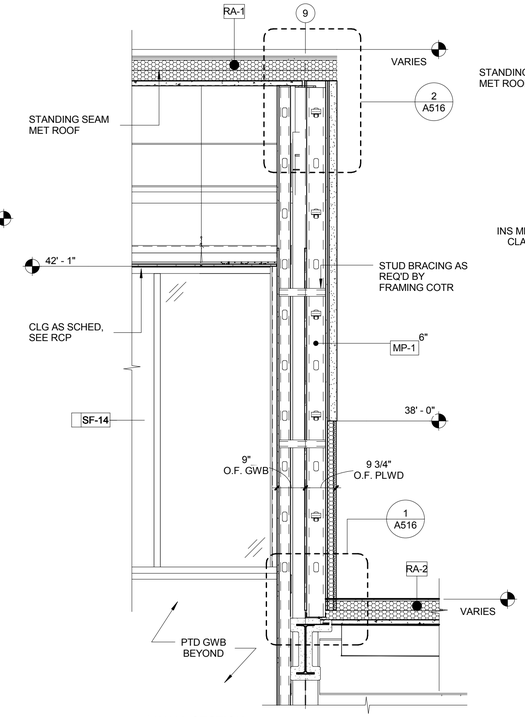

4 WALL SECTION
SCALE: 1/2" = 1'-0"

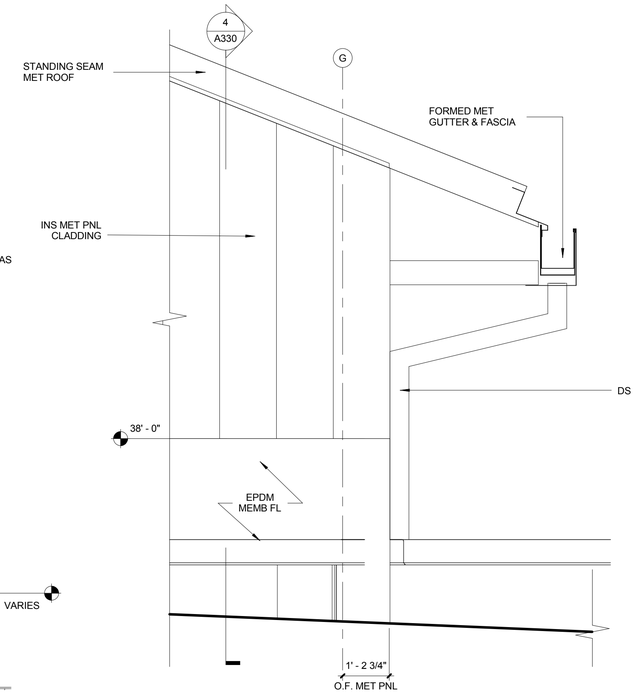

3 ENLARGED ELEV
SCALE: 1/2" = 1'-0"

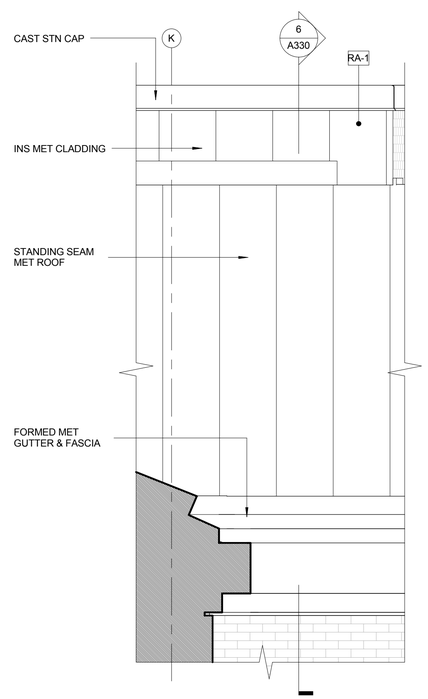

5 ENLARGED ELEV
SCALE: 1/2" = 1'-0"

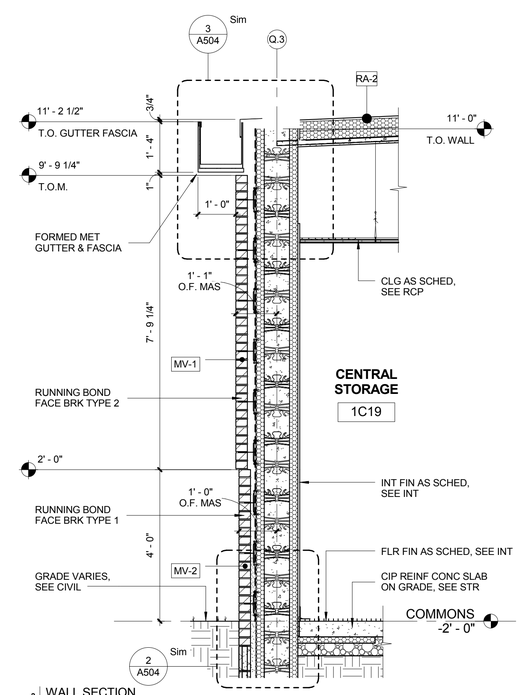

2 WALL SECTION
SCALE: 1/2" = 1'-0"

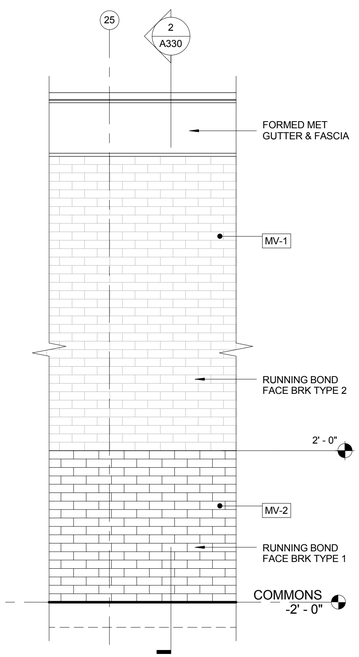

1 ENLARGED ELEVATION
SCALE: 1/2" = 1'-0"

0 1' 2' 4' 6'
SCALE AT FULL SIZE: 1/2" = 1'-0"

GENERAL NOTES:

1. COORD DWG'S W/ INDIVIDUAL SPEC SECTIONS FOR GENERAL & SUPPLEMENTARY PROVISIONS TO THE CONTRACT DOCUMENTS.
2. FOR TYP EXT WALL & ROOF CONSTR, SEE SHEET A500
3. SEE A410-SERIES SHEETS FOR EXT CW & SF FRAME SCHEDULES
4. FOR DR SCHED, SEE SHEET A404
5. CENTER EXT WALL DEVICES ON BRK COURSING, UNO

SYM	DESCRIPTION	DATE	APPR

NAVFAC

SEAL

EWING COLE
Federal Reserve Bank Building
100 North 6th Street
Philadelphia, PA 19106-1590
Tel: 215-923-2020 Fax: 215-574-0952

A/E INFO

APPROVED

FOR COMMANDER NAVFAC ACTIVITY

SATISFACTORY TO DATE

Designer KBM Checker

PM/DM

BRANCH MANAGER

CHIEF ENG/ ARCH

FIRE PROTECTION

DEPARTMENT OF THE NAVY
DoDEA
NAVAL FACILITIES ENGINEERING COMMAND
NAVAL FACILITIES ENGINEERING COMMAND ~ WASHINGTON
MARINE CORPS BASE QUANTICO
MARINE CORPS BASE QUANTICO, VIRGINIA
QUANTICO, VA

REPLACE QUANTICO M/H SCHOOL

WALL SECTIONS

SCALE: As indicated
PROJECT NO.: P-021
CONSTR. CONTR. NO. W91236-15-C-0023
NAVFAC DRAWING NO. 13090953
SHEET 199 OF 789
A330

DRAWFORM REVISION: 10 MARCH 2009

RTA SUBMISSION - 10/13/2016

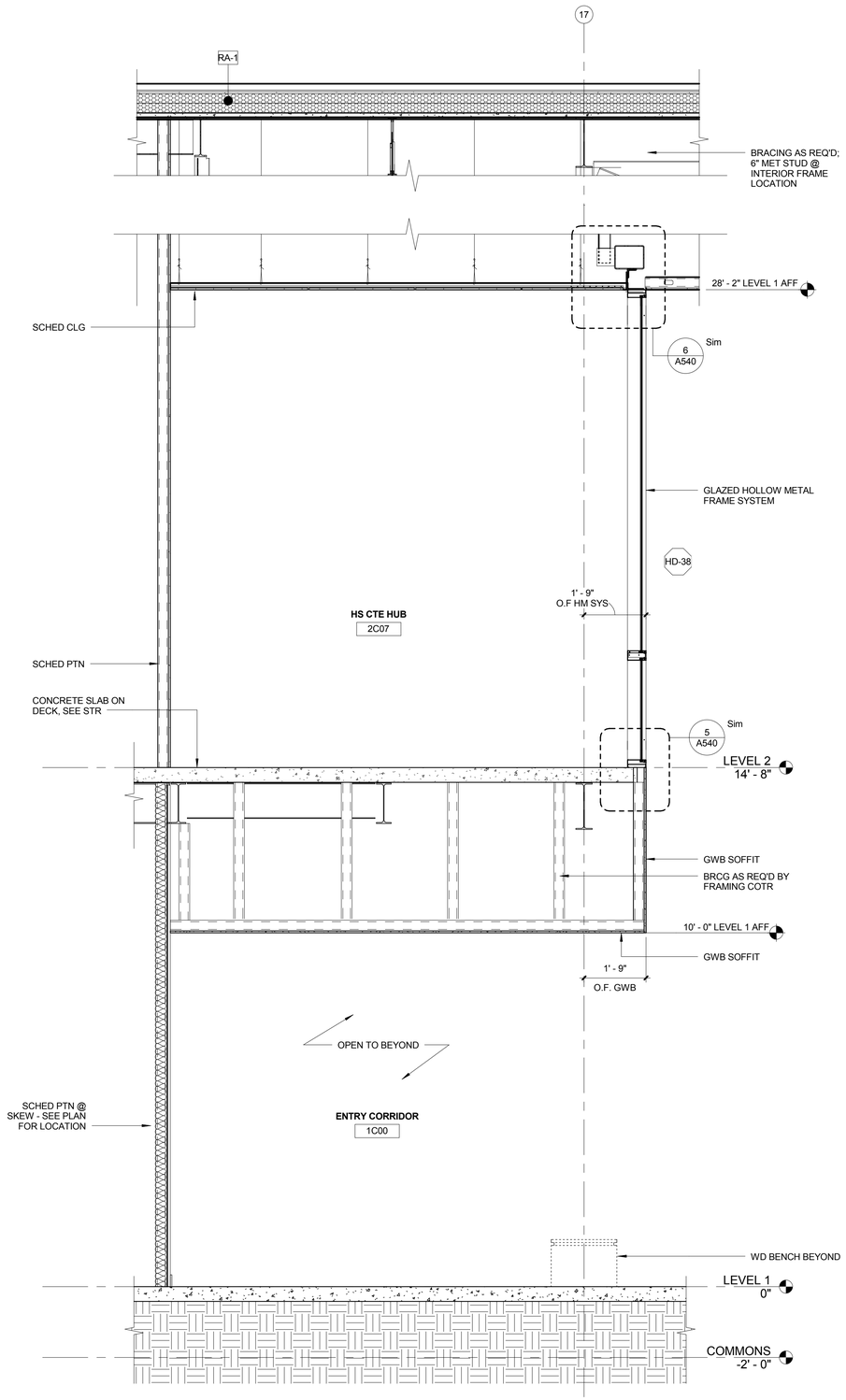

3 WALL SECTION - ENTRY CORRIDOR WEST
SCALE: 1/2" = 1'-0"

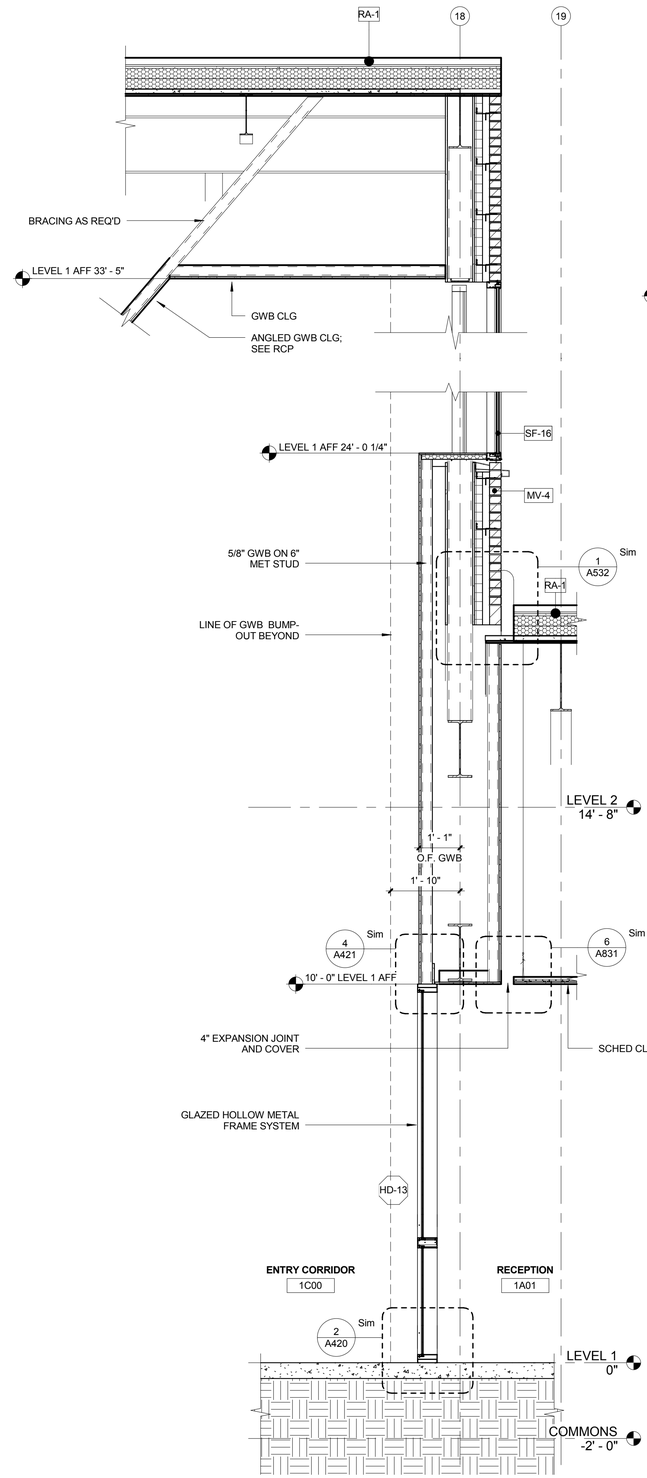

2 WALL SECTION - ENTRY CORRIDOR EAST @ WINDOW
SCALE: 1/2" = 1'-0"

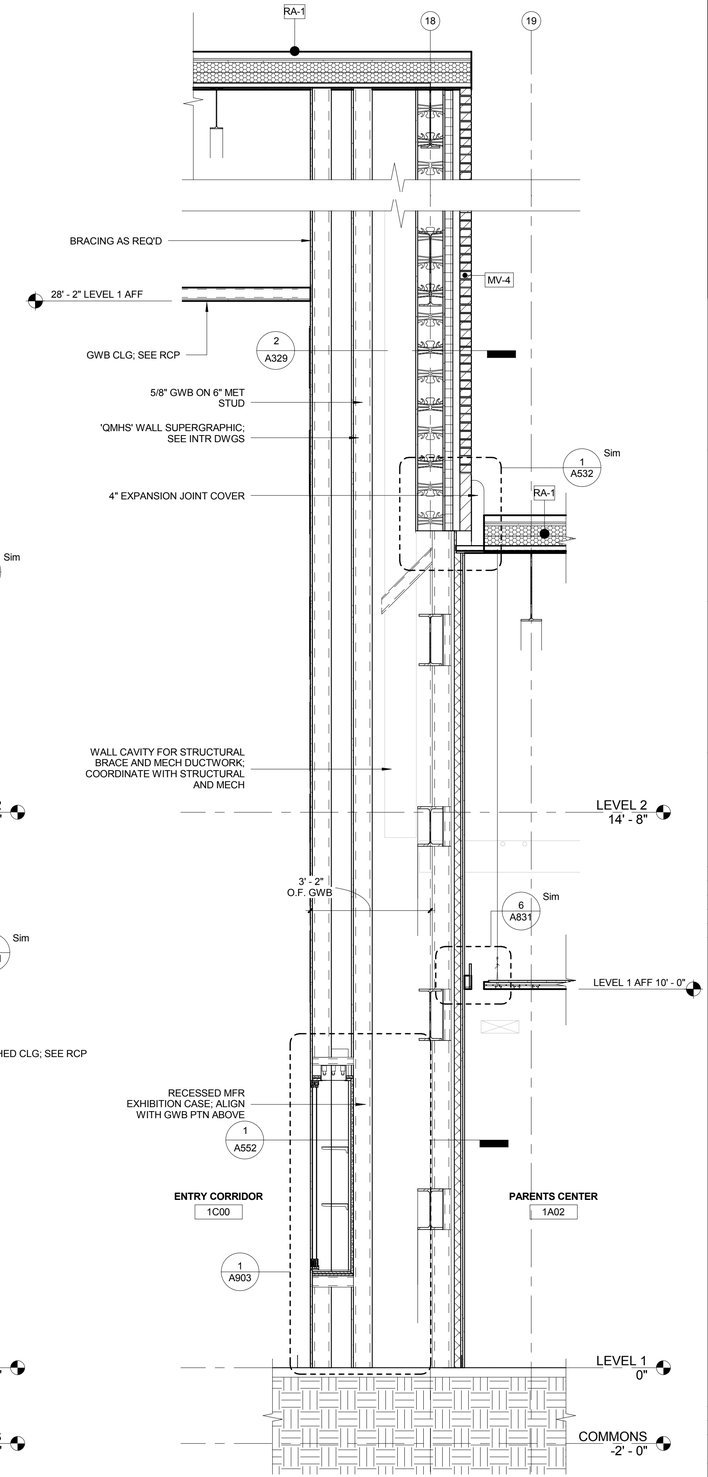

1 WALL SECTION - ENTRY CORRIDOR EAST
SCALE: 1/2" = 1'-0"

SYM	DESCRIPTION	DATE	APPR

NAVFAC

SEAL

EWING COLE
Federal Reserve Bank Building
100 North 6th Street
Philadelphia, PA 19106-1590
Tel: 215-923-2020 Fax: 215-574-0952

A/E INFO

APPROVED

FOR COMMANDER NAVFAC
ACTIVITY

SATISFACTORY TO DATE

Designer Author Checker

PM/DM

BRANCH MANAGER

CHIEF ENG/ ARCH

FIRE PROTECTION

DEPARTMENT OF THE NAVY
DoDEA
NAVAL FACILITIES ENGINEERING COMMAND
NAVAL FACILITIES ENGINEERING COMMAND ~ WASHINGTON
MARINE CORPS BASE QUANTICO
MARINE CORPS BASE QUANTICO, VA
QUANTICO, VA

REPLACE QUANTICO M/H SCHOOL

WALL SECTIONS - INTERIOR

SCALE: 1/2" = 1'-0"
PROJECT NO.: P-021
CONSTR. CONTR. NO. W91236-15-C-0023
NAVFAC DRAWING NO. 13090954
SHEET 200 OF 789
A331

DRAWFORM REVISION: 10 MARCH 2009

RTA SUBMISSION - 10/13/2016

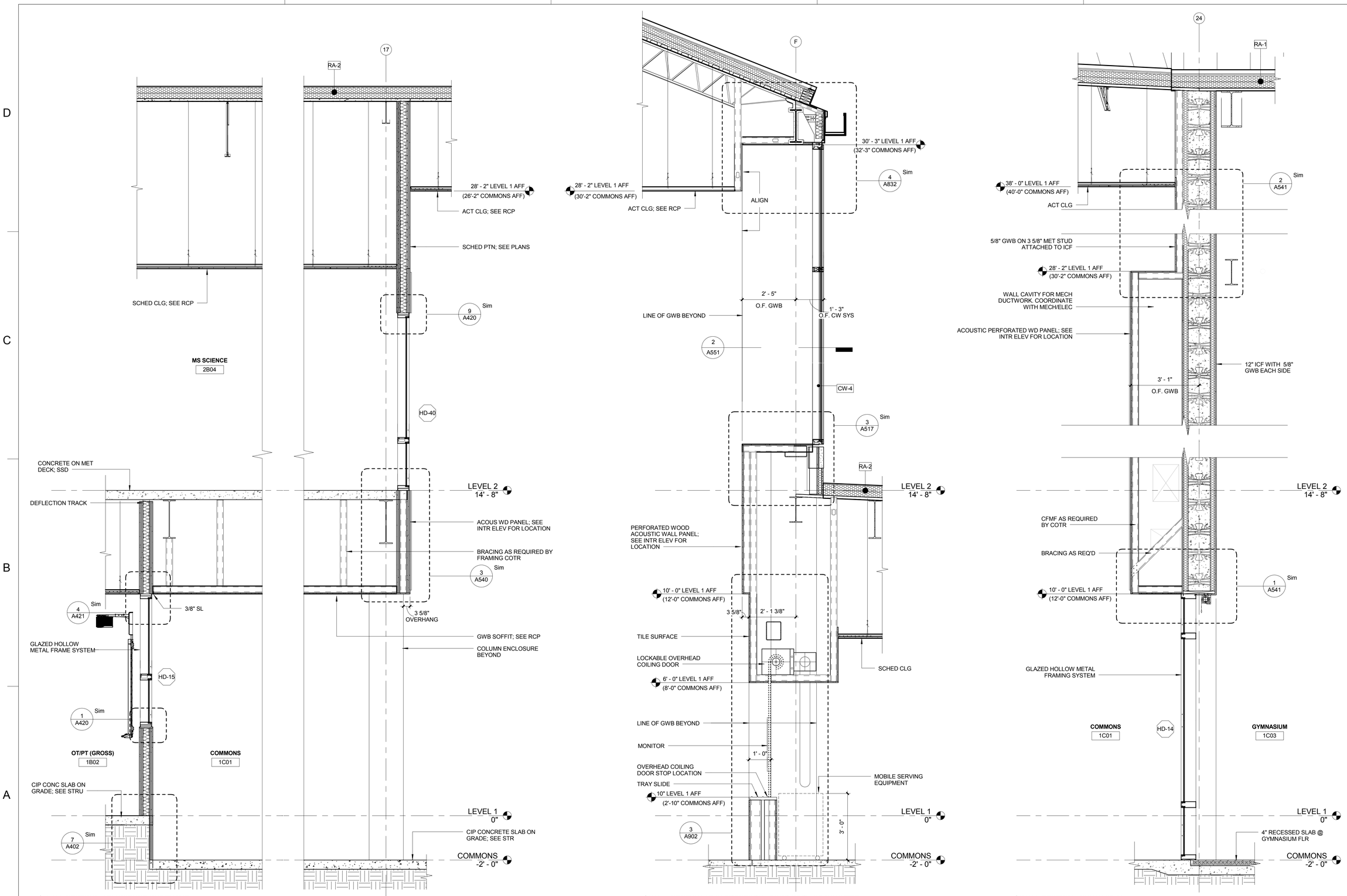

SYM	DESCRIPTION	DATE	APPR

NAVFAC

REGISTERED ARCHITECT PENNSYLVANIA KEITH G. FALLON RA-024150

SEAL

EWING COLE
Federal Reserve Bank Building
100 North 6th Street
Philadelphia, PA 19106-1590
Tel: 215-923-2020 Fax: 215-574-0952

A/E INFO

APPROVED

FOR COMMANDER NAVFAC
ACTIVITY

SATISFACTORY TO DATE
Designer Author Checker
PM/DM
BRANCH MANAGER
CHIEF ENG/ ARCH
FIRE PROTECTION

DEPARTMENT OF THE NAVY
DoDEA
NAVAL FACILITIES ENGINEERING COMMAND
NAVAL FACILITES ENGINEERING COMMAND ~ WASHINGTON
MARINE CORPS BASE QUANTICO
MARINE CORPS BASE QUANTICO, VIRGINIA
QUANTICO, VA

REPLACE QUANTICO M/H SCHOOL

WALL SECTIONS - INTERIOR

SCALE: 1/2" = 1'-0"
PROJECT NO.: P-021
CONSTR. CONTR. NO. W91236-15-C-0023
NAVFAC DRAWING NO. 13090955
SHEET 201 OF 789
A332

DRAWFORM REVISION: 10 MARCH 2009

RTA SUBMISSION - 10/13/2016

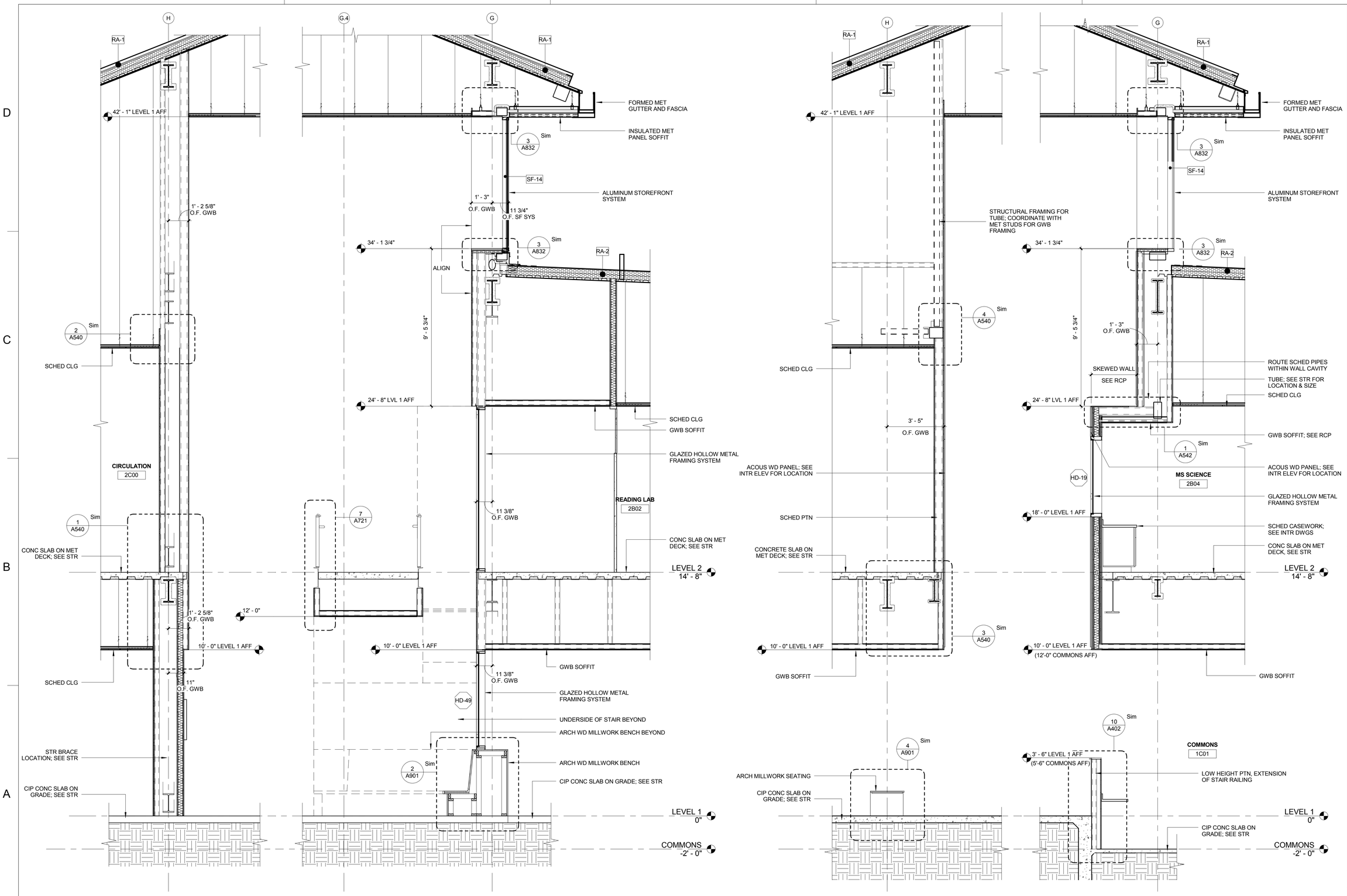

2 WALL SECTION - CANYON 2
SCALE: 3/8" = 1'-0"

1 WALL SECTION - CANYON 1
SCALE: 3/8" = 1'-0"

SYM	DESCRIPTION	DATE	APPR

NAVFAC

REGISTERED ARCHITECT PENNSYLVANIA KEITH G. FALLON RA-025429

SEAL

EWING COLE
Federal Reserve Bank Building
100 North 6th Street
Philadelphia, PA 19106-1590
Tel: 215-923-2020 Fax: 215-574-0952

A/E INFO

APPROVED

FOR COMMANDER NAVFAC
ACTIVITY

SATISFACTORY TO	DATE
Designer Author Checker	
PM/DM	
BRANCH MANAGER	
CHIEF ENG/ ARCH	
FIRE PROTECTION	

DEPARTMENT OF THE NAVY
DoD/EA
NAVAL FACILITIES ENGINEERING COMMAND
MARINE CORPS BASE QUANTICO
NAVAL FACILITIES ENGINEERING COMMAND ~ WASHINGTON
MARINE CORPS BASE QUANTICO, VIRGINIA
QUANTICO, VA

REPLACE QUANTICO M/H SCHOOL

WALL SECTIONS - INTERIOR

SCALE: 3/8" = 1'-0"
PROJECT NO.: P-021
CONSTR. CONTR. NO.
W91236-15-C-0023
NAVFAC DRAWING NO.
13090956
SHEET 202 OF 789
A333

DRAWFORM REVISION: 10 MARCH 2009

RTA SUBMISSION - 10/13/2016

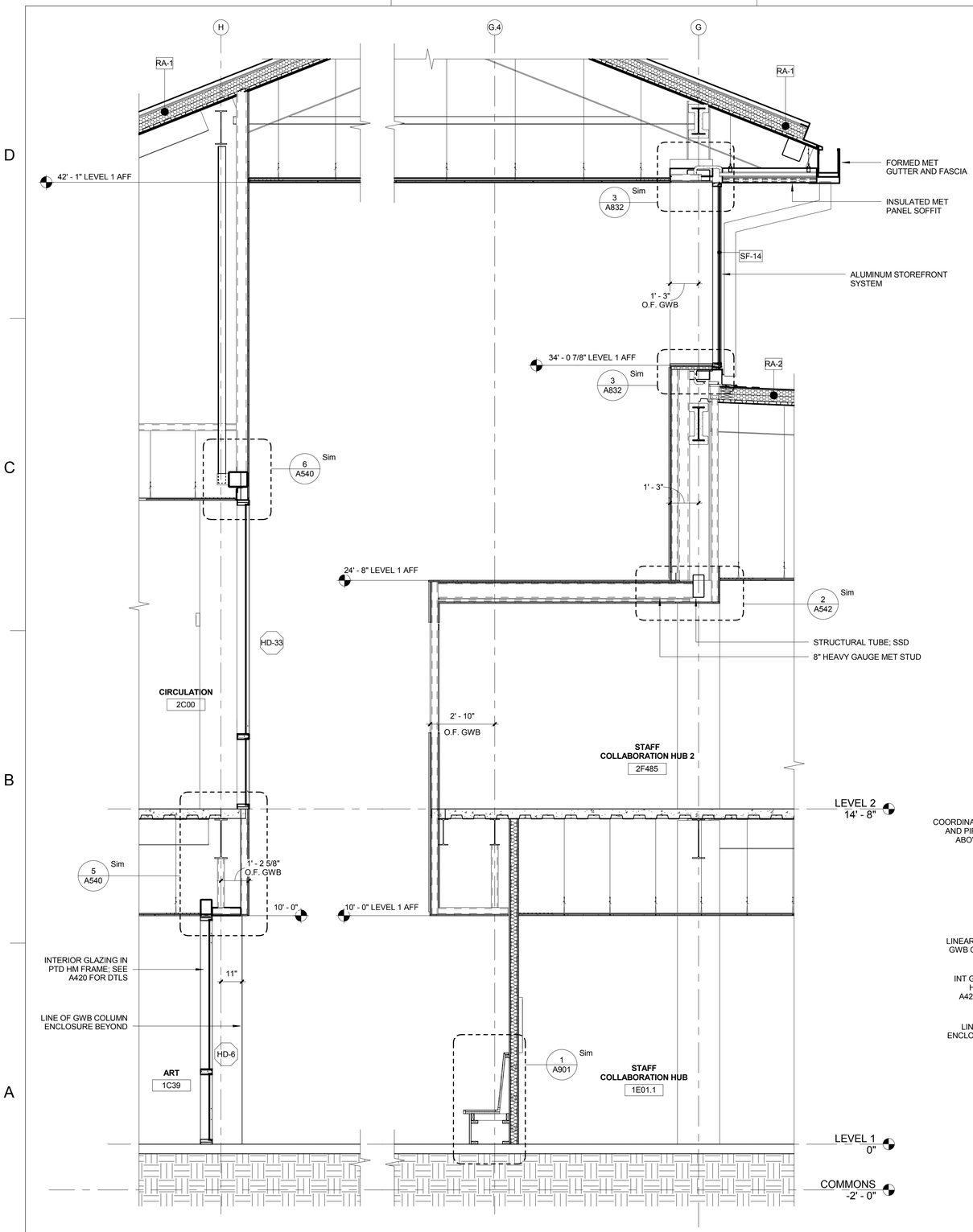

2 WALL SECTION - CANYON 4
SCALE: 3/8" = 1'-0"

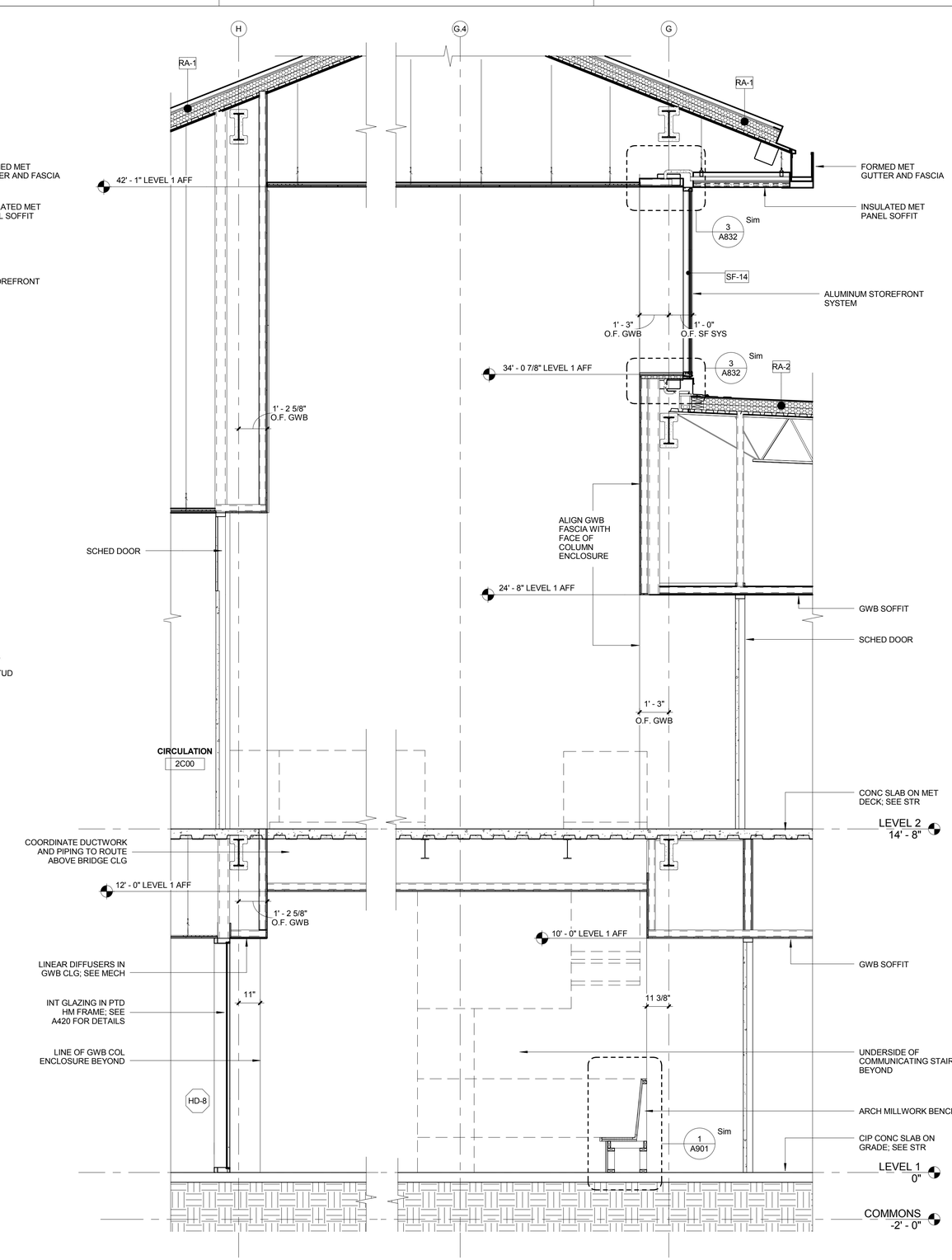

1 WALL SECTION - CANYON 3
SCALE: 3/8" = 1'-0"

SYM	DESCRIPTION	DATE	APPR

NAVFAC

REGISTERED ARCHITECT PENNSYLVANIA KEITH G. FALLON RA-024150

SEAL

EWING COLE
Federal Reserve Bank Building
100 North 6th Street
Philadelphia, PA 19106-1590
Tel: 215-923-2020 Fax: 215-574-0952

A/E INFO

APPROVED

FOR COMMANDER NAVFAC
ACTIVITY

SATISFACTORY TO DATE

Designer Author Checker

PM/DM

BRANCH MANAGER

CHIEF ENG/ ARCH

FIRE PROTECTION

DEPARTMENT OF THE NAVY
NAVAL FACILITIES ENGINEERING COMMAND
DoDEA
NAVAL FACILITIES ENGINEERING COMMAND ~ WASHINGTON
MARINE CORPS BASE QUANTICO, VIRGINIA
MARINE CORPS BASE QUANTICO
QUANTICO, VA

REPLACE QUANTICO M/H SCHOOL

WALL SECTIONS - INTERIOR

SCALE: 3/8" = 1'-0"
PROJECT NO.: P-021
CONSTR. CONTR. NO. W91236-15-C-0023
NAVFAC DRAWING NO. 13090957
SHEET 203 OF 789
A334

DRAWFORM REVISION: 10 MARCH 2009

RTA SUBMISSION - 10/13/2016

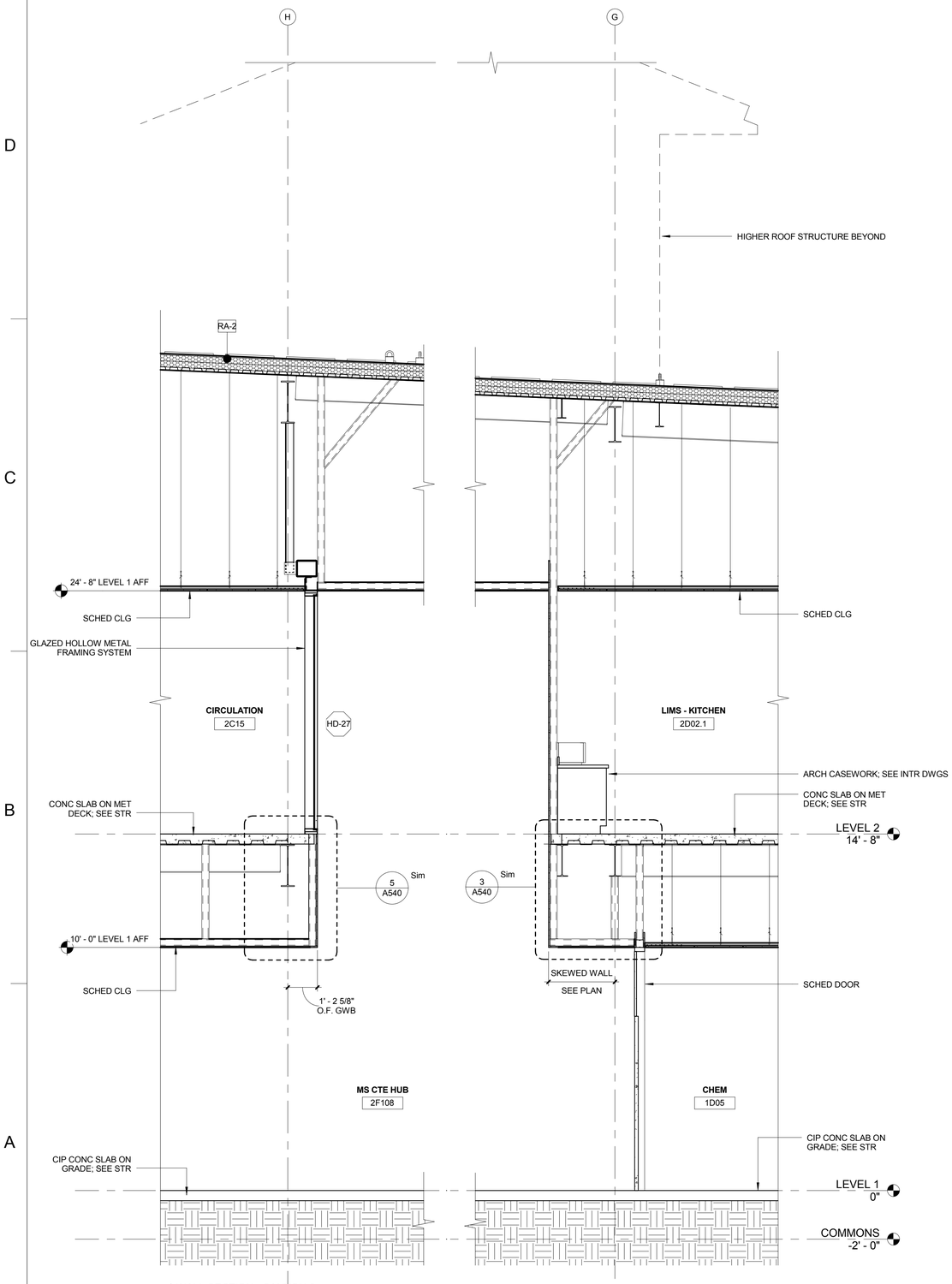

2 WALL SECTION - CANYON 6
SCALE: 3/8" = 1'-0"

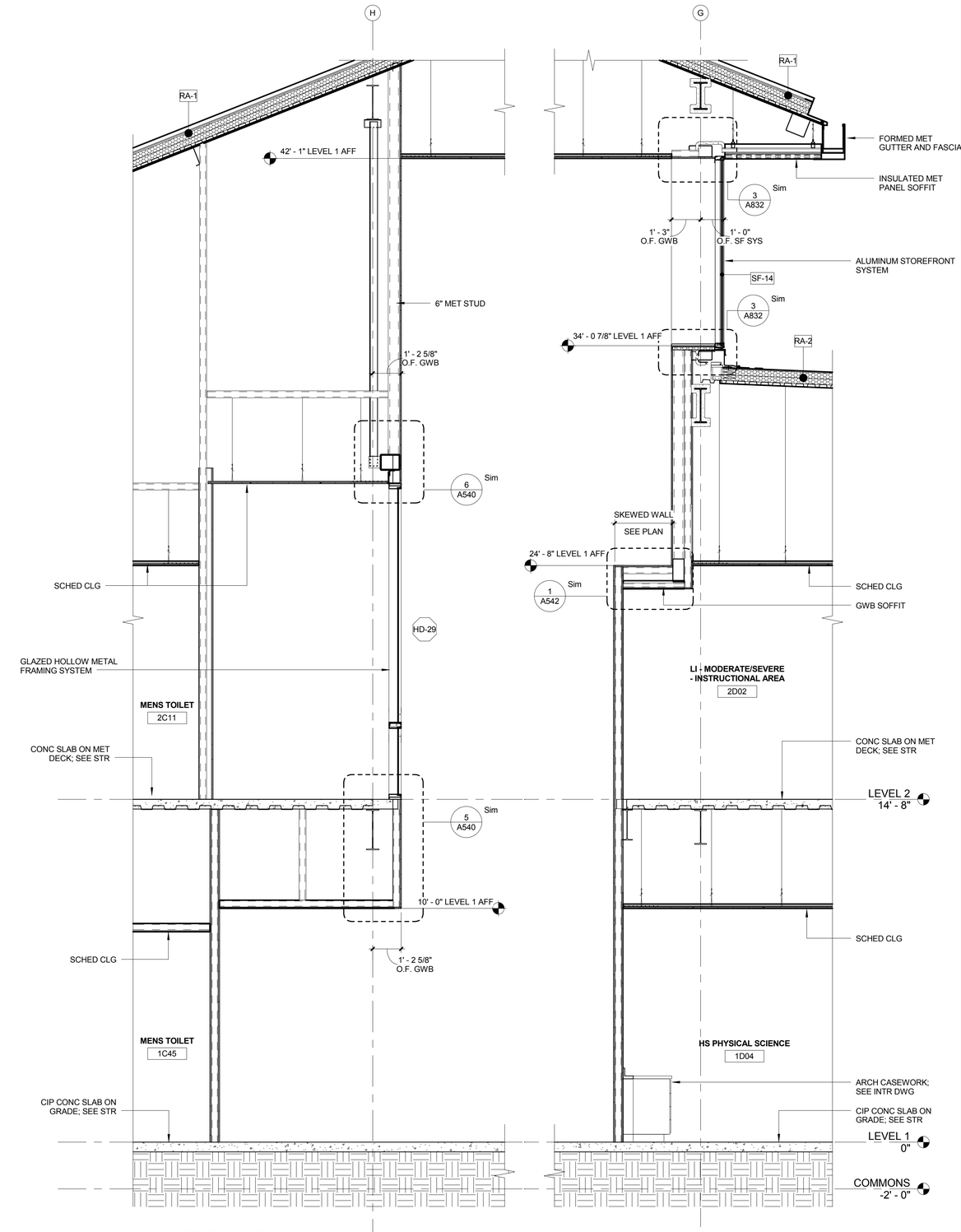

1 WALL SECTION - CANYON 5
SCALE: 3/8" = 1'-0"

SYM	DESCRIPTION	DATE	APPR

NAVFAC

SEAL

EWING COLE
Federal Reserve Bank Building
100 North 6th Street
Philadelphia, PA 19106-1590
Tel: 215-923-2020 Fax: 215-574-0952

A/E INFO

APPROVED

FOR COMMANDER NAVFAC
ACTIVITY

SATISFACTORY TO DATE
Designer Author Checker
PM/DM
BRANCH MANAGER
CHIEF ENG/ ARCH
FIRE PROTECTION

DEPARTMENT OF THE NAVY
NAVAL FACILITIES ENGINEERING COMMAND
DoDEA
NAVAL FACILITIES ENGINEERING COMMAND ~ WASHINGTON
MARINE CORPS BASE QUANTICO, VIRGINIA
MARINE CORPS BASE QUANTICO
QUANTICO, VA
REPLACE QUANTICO M/H SCHOOL
WALL SECTIONS - INTERIOR

SCALE: 3/8" = 1'-0"
PROJECT NO.: P-021
CONSTR. CONTR. NO.
W91236-15-C-0023
NAVFAC DRAWING NO.
13090958
SHEET 204 OF 789
A335

DRAWFORM REVISION: 10 MARCH 2009

RTA SUBMISSION - 10/13/2016