NAVFAC
Naval Facilities Engineering Command
NAVFAC WASHINGTON

REPLACE FAN COIL UNIT
BUILDING 222

Basis of Design

Revised Final Submission

Naval Research Laboratory

Washington, DC

April 17, 2015

Contract: N40080-11-D-0491
Task Order: 0047

JACOBS
1100 NORTH GLEBE ROAD, SUITE 500
ARLINGTON, VIRGINIA 22201

TABLE OF CONTENTS

SECTION 1 MECHANICAL 1

1.1 PROJECT DESCRIPTION 1
1.2 APPLICABLE CODES AND STANDARDS 1
1.3 DESIGN 2
1.3.1 Outdoor design conditions 2
1.3.2 Building Envelope 2
1.3.3 Indoor Design Conditions 3
1.3.4 Load Analysis 3
1.4 EXISTING CONDITIONS 4
1.5 NEW WORK 4
1.6 PHASING 5

SECTION 2 ELECTRICAL 6

2.1 PROJECT DESCRIPTION 6
2.2 DESIGN 6
3.2.1 Existing Conditions 6
3.2.2 New Work 6

SECTION 3 APPENDIX 7

APPENDIX A ..... FAN COIL UNIT ZONES OVERVIEW
APPENDIX B ..... MECHANICAL FAN COIL UNIT SCHEDULE, DETAIL AND CUT SHEETS
APPENDIX C ..... LOAD ANALYSIS

SECTION 1 MECHANICAL

1.1 PROJECT DESCRIPTION

Building 222 at the Naval Research Laboratory is primarily made up of office spaces with conference rooms scattered throughout the building. The building was built in the mid 1960's.

The perimeter of the building is served by a combination of fan coil units with built in thermostats and the VAV system with space mounted thermostats. This project is to produce an RFP to replace the fan coil units, while ensuring that downtime is kept at a minimum.

1.2 APPLICABLE CODES AND STANDARDS

The design shall comply with the latest editions of the following codes and standards at a minimum:

- International Building Code (IBC)
- International Mechanical Code (IMC)
- Unified Facilities Criteria (UFC) 1-200-01, Design: General Building Requirements
- UFC 3-400-01, Energy Conservation
- UFC 3-400-02, Design: Weather Data
- UFC 3-400-10N, Mechanical Engineering
- UFC 3-410-02, Direct Digital Control for HVAC and Other Local Building Systems
- UFC 3-420-01, Plumbing Systems
- UFC 3-450-01, Noise and Vibration Control
- ASHRAE 55, Thermal Environmental Conditions for Human Occupancy
- ASHRAE 90.1, Energy Standards for Buildings Except Low-Rise Residential Buildings
- NAVSEA OP 5 Chapter 8, Version 7
- NFPA 70, National Electrical Code
- NFPA 90A, Standard for the Installation of Air-Conditioning and Ventilating Systems

JACOBS
1100 NORTH GLEBE ROAD, SUITE 500
ARLINGTON, VIRGINIA 22201

1.3 DESIGN

1.3.1 OUTDOOR DESIGN CONDITIONS

Outdoor design conditions shall be based on NOAA National Climate Data Center's 1% summer design dry and wet bulb condition and 99% winter design dry bulb conditions at Washington, D.C. (National), which is the closest observation site to the project's location. The NOAA data set is identical to the data set referenced in UFC 3-400-02 Design: Engineering Weather Data. Design climate conditions are summarized as follows:

Location	Washington, D.C.
Latitude	38.0 deg North Latitude
Longitude	77.0 deg West Longitude
Elevation	14 feet
Summer design dry bulb (.04%)	92 °F
Summer mean coinc.wet bulb	76 °F
Summer design wet bulb (1%)	78 °F
Summer mean coinc.dry bulb	87 °F
Summer Humidity Ratio (1%)	132 grains/lb
Design coincident dry bulb	83 °F
Winter design dry bulb (99%)	15 °F
Median Annual Extremes:	11 °F Winter
	98 °F Summer

1.3.2 BUILDING ENVELOPE

Building Element	Existing Conditions
Building Area (ft^2):	111,052 Total
Building Orientation:	West Facing
Above Grade	2
Below Grade	0
Floor-to-Floor Height:	12 ft
Floor-to-Ceiling Height:	10'-0" (Majority of Locations)

JACOBS
1100 NORTH GLEBE ROAD, SUITE 500
ARLINGTON, VIRGINIA 22201

Building Element	Existing Conditions
Typical Exterior Wall	8” CMU Wall without insulation R-Value = 5 U-Value = 0.40
Floor Construction	4" LW concrete
Interior Finish	Painted CMU
Door	Nonresidential swinging U-Value = 0.200
Perimeter Zones:	0.25 cfm/sq ft of wall (Vestibule 3 AC/HR)
Typical Window	Nonresidential Metal frame ¼” tinted glass, SHGC = 0.50 Shading Coefficient = 0.58 U-Value = 1.04

1.3.3 INDOOR DESIGN CONDITIONS

Offices and conference rooms shall be air-conditioned and heated. Indoor conditions shall be maintained to satisfy the following UFC requirements.

Space Type	Occ’d Cooling (°F)	Unocc. Cooling (°F)	Occ’d Heating (°F)	Unocc. Heating (°F)	Humidity Limits
Office	78	82	68	55	0%-55%
Conference Room	78	82	68	55	0%-55%
Corridor	78	82	68	55	0%-55%
Toilet M/F	-	-	68	55	0%-55%

1.3.4 LOAD ANALYSIS

The fan coil units are designed to meet the building envelope loads. A typical room

JACOBS
1100 NORTH GLEBE ROAD, SUITE 500
ARLINGTON, VIRGINIA 22201

for the First and Second Floors and North, East, South, and West facades was created to estimate the fan coil unit load requirements. See Appendix C for detailed calculation information.

1.4 EXISTING CONDITIONS

Building 222 receives chilled water from the central chilled water plant. Steam is brought to the building via piping from a central boiler plant. The steam is connected to a steam to hot water converter for use in heating hot water. The fan coil units (FCUs) are two pipe switch-over units being served by both the chilled water and hot water system. The existing plant does not currently have means for a chemical treatment system for the chilled water or the hot water system.

VAV air handlers provide heating, ventilating and air conditioning to the building. Fan coil units also provide heating and cooling to the perimeter area of the building. Convectors provide heating only to the hallways adjacent to an interior building courtyard. The fan coils are old but most are still in working condition but condensate drain system is not working properly causing some fan coils to drip condensate on the floor.

There is a building wide control system that controls the new air handling units but the FCUs are not connected to the building controller. The FCUs are controlled by built in thermostats and control valves. The FCUs also have built in isolation valves.

1.5 NEW WORK

Building 222 at the Naval Research Laboratory is primarily made up of office spaces with conference rooms scattered throughout the building. The building was built in the mid 1960's.

The perimeter of the building is served by a combination of fan coil units with built in thermostats and the VAV system with space mounted thermostats. This project is to produce an RFP to replace the fan coil units, while ensuring that downtime is kept at a minimum.

The new fan coil units shall maintain the functionality of the existing units. The field cabinet units shall have new enclosures. The standalone units shall be completely replaced in kind. The isolation and control valves shall also be replaced.

The new fan coil units will each be zoned in accordance with this document and as designed by the design build contractor. Each fan coil unit will be provided with a

JACOBS
1100 NORTH GLEBE ROAD, SUITE 500
ARLINGTON, VIRGINIA 22201

two-way control valve, a remote air temperature sensor, a changeover sensor and a network-ready DDC thermostat, which is BACnet compliant, with a DDC connection point to enable future connection to Building Siemens DDC controls. The new network-ready DDC thermostat will be installed in a control box in the new FCU enclosure. The network-ready DDC thermostat will not be connected to the existing base-wide DDC system under this renovation project. The remote air temperature sensor will be installed on return air path of the fan coil unit for valve control. The changeover sensor will be provided on the hot/chilled water supply pipe to the fan coil unit to change the operation of thermostat from heating to cooling mode based on supply water temperature. Fan coil units shall have multispeed electronically commutated motors for high efficiency operation.

Contractor shall integrate the new FCUs with the existing hydronic water distribution system. The contractor shall document the performance of the existing hydronic system and its components before construction begins, after the completion of each phase of construction, and after all new equipment has been installed and is operational.

Contractor shall clean the condensate drainage system with compressed air, vacuum, or snake to ensure that water flows freely through the condensate pipes from the each FCU to the termination point of the drain. Inspect the condensate drainage system to ensure that there are no leaks.

Contractor shall provide a condensate drain pan switch to disable the FCU before condensate overflow occurs.

1.6 PHASING

The fan coil units are connected to four piping loops based on exposure; north, east, south, and west. Each exposure loop is served by one pump. The pumps are not interconnected, so there is not any redundancy in pumping for each zone. A detailed construction phasing plan shall be broken down into zones by North, East, South, and West. A zone overview is provided in Appendix A.

JACOBS
1100 NORTH GLEBE ROAD, SUITE 500
ARLINGTON, VIRGINIA 22201

SECTION 2 ELECTRICAL

2.1 PROJECT DESCRIPTION

Provide electrical connections to all Fan Coil Units being replaced under mechanical division by utilizing the existing breakers in existing electrical panel boards and new conductors in existing conduit, that are presently serving the FCUs.

2.2 DESIGN

3.2.1 EXISTING CONDITIONS

All existing fan coil units being replaced are 120 V, 1/6 HP and are served from existing 1P–20A breakers (3 FCUs per 20A circuit) in existing 120/208V–3 PH–4W–225A panel boards manufactured by Westinghouse as follows:

First Floor – North:	Panel 'LA' located in Rm 125
	Panel 'LB' located in Rm 113
First Floor – South:	Panel 'LC' located in Rm 120
	Panel 'LD2' located in Rm 154
Second Floor – North:	Panel 'LF' located in Rm 206
	Panel 'LE' located in Rm 217
Second Floor – South:	Panel 'G1' located in Rm 266
	Panel 'LH1' located in Rm 236

The existing wiring from each FCU to the serving panels is 50 years old and consists of copper conductors in EMT conduit of different lengths.

3.2,2 NEW WORK

The existing 1P-20A circuit breakers in existing panels, and associated conduit presently serving the FCUs being replaced, will be utilized to connect the new fan coil units. Since the FCUs are being replaced by units with equal horsepower as existing units, no adjustments are required to the panels or wiring. The FCU's will be furnished with a motor thermal disconnect switch. Replace existing # 12 AWG conductors in existing conduit as required to accommodate the connections to the new fan coil units.

JACOBS
1100 NORTH GLEBE ROAD, SUITE 500
ARLINGTON, VIRGINIA 22201

SECTION 3 APPENDIX

A. Fan Coil Unit Zones Overview
B. Mechanical Fan Coil Unit Schedule, Detail and Cut Sheets
C. Load Analysis

JACOBS
1100 NORTH GLEBE ROAD, SUITE 500
ARLINGTON, VIRGINIA 22201

APPENDIX A

FAN COIL UNIT ZONES OVERVIEW

JACOBS
1100 NORTH GLEBE ROAD, SUITE 500
ARLINGTON, VIRGINIA 22201

LEGEND: FC – FACTORY CABINET
FE – FIELD ENCLOSURE
NV – NOT VERIFIED

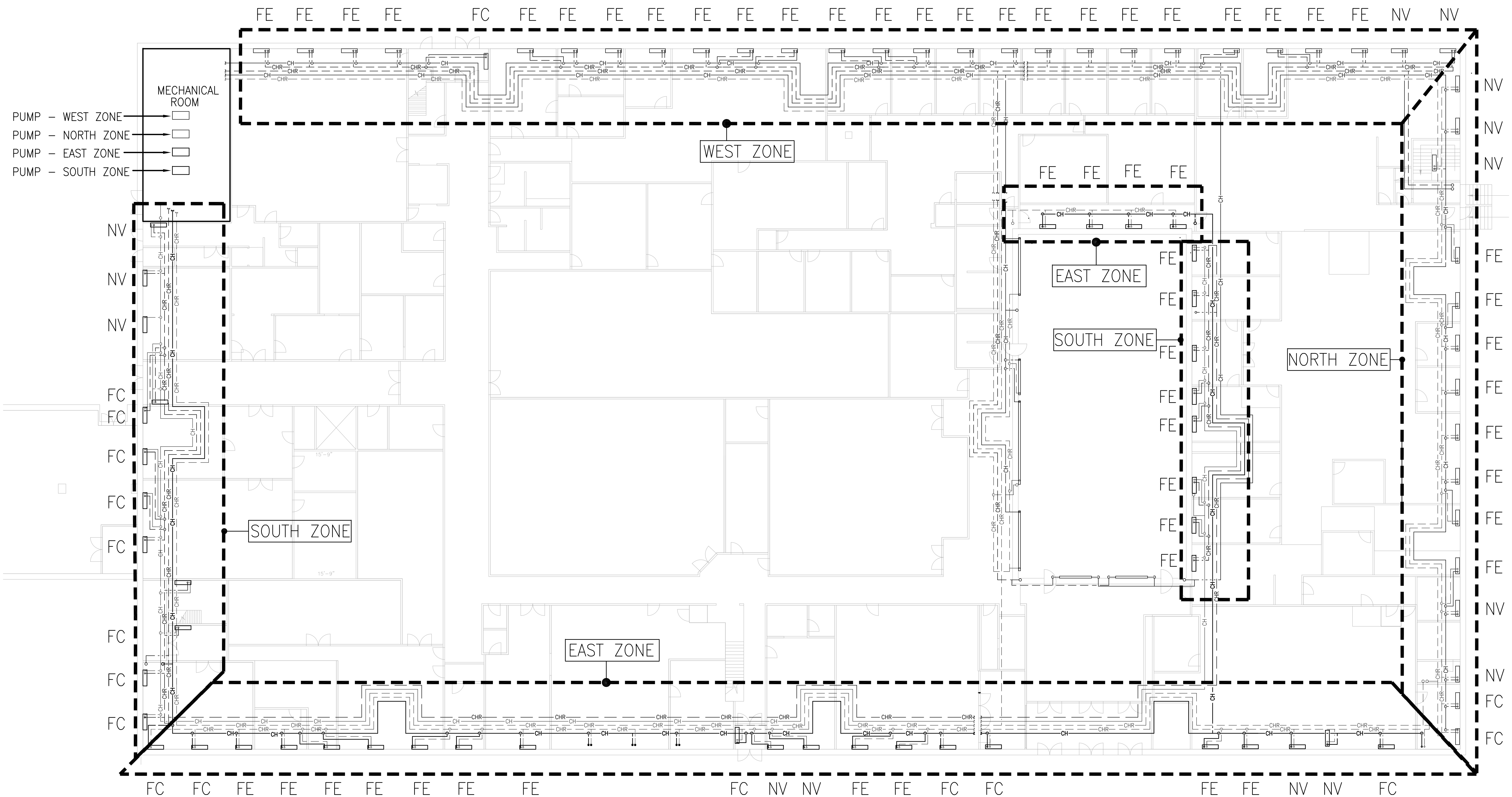

BUILDING 222 FIRST FLOOR PLAN – FAN COIL ZONES

FOR REFERENCE ONLY – CONTRACTOR TO FIELD VERIFY ALL FAN COILS AND PUMPS.

LEGEND: FC – FACTORY CABINET
FE – FIELD ENCLOSURE
NV – NOT VERIFIED

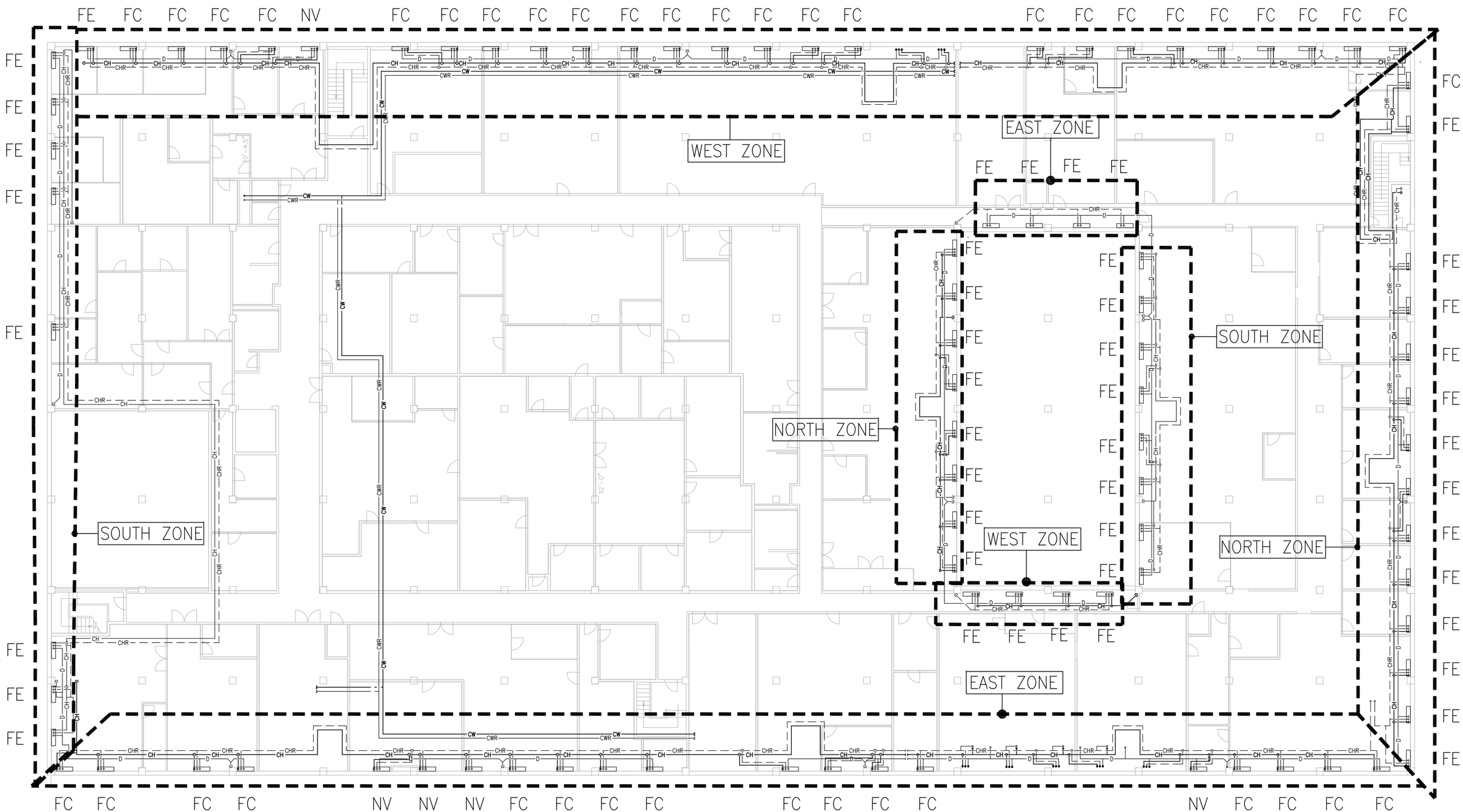

BUILDING 222 SECOND FLOOR PLAN – FAN COIL ZONES

FOR REFERENCE ONLY – CONTRACTOR TO FIELD VERIFY ALL FAN COILS AND PUMPS.

APPENDIX B

MECHANICAL FAN COIL UNIT SCHEDULE, DETAIL AND CUT SHEETS

JACOBS
1100 NORTH GLEBE ROAD, SUITE 500
ARLINGTON, VIRGINIA 22201

NRL BUILDING 222 FAN COIL UNIT SCHEDULE

UNIT NO.	CFM RANGE		NC AT	COOLING CAPACITY					HEATING CAPACITY					ELECTRICALELECTRICAL				ESP	BASIS OF DESIGN		NOTES
	MIN	MAX	MED SPEED	EWT/LWT (°F)	TOTAL (MBH)	SENS (MBH)	GPM	WPD (FT WG)	EWT/LWT (°F)	CAPACITY (MBH)	MAX CFM	GPM	WPD (FT WG)	(VOLT)	DATA (PH)	FLA	(HZ)		MFGR	MODEL SERIES	
FC-1	0	400		42/52	11.6	9.3	2.30	11	180/113	20.6	400	0.60	1.0	120	1	2.4	60		CARRIER	42VB	1,2,3,4,5,6,7,8
FC-2	0	200		42/52	6	4.5	1.20	17	180/122	13.4	200	0.50	2.7	120	1	2.4	60		CARRIER	42VB	1,2,3,4,5,6,7,8
FC-3	0	400		42/52	11.6	9.3	2.30	11	180/113	20.6	400	0.60	1.0	120	1	2.4	60		CARRIER	42VA	1,2,3,4,5,6,7,9

NOTES:
1. CHILLED WATER ENTERING WATER TEMPERATURE: 42°F.
2. HEATING HOT WATER ENTERING WATER TEMPERATURE: 180°F.
3. PROVIDE FACTORY SUPPLIED ISOLATION VALVE, BALANCING VALVE, STRAINER AND CONTROL VALVE INTEGRAL TO THE UNIT.
4. PROVIDE 24V CONTROLS TRANSFORMER.
5. PROVIDE BUILT IN AIR VENT.
6. PROVIDE CONDENSATE DRAIN OVERFLOW SWITCH.
7. PROVIDE THROWAWAY FILTER
8. PROVIDE FACTORY SUPPLIED INSULATED CASING.
9. PROVIDE FIELD ENCLOSURE.
10. PROVIDE FACTORY MOUNTED DISCONNECT SWITCH.

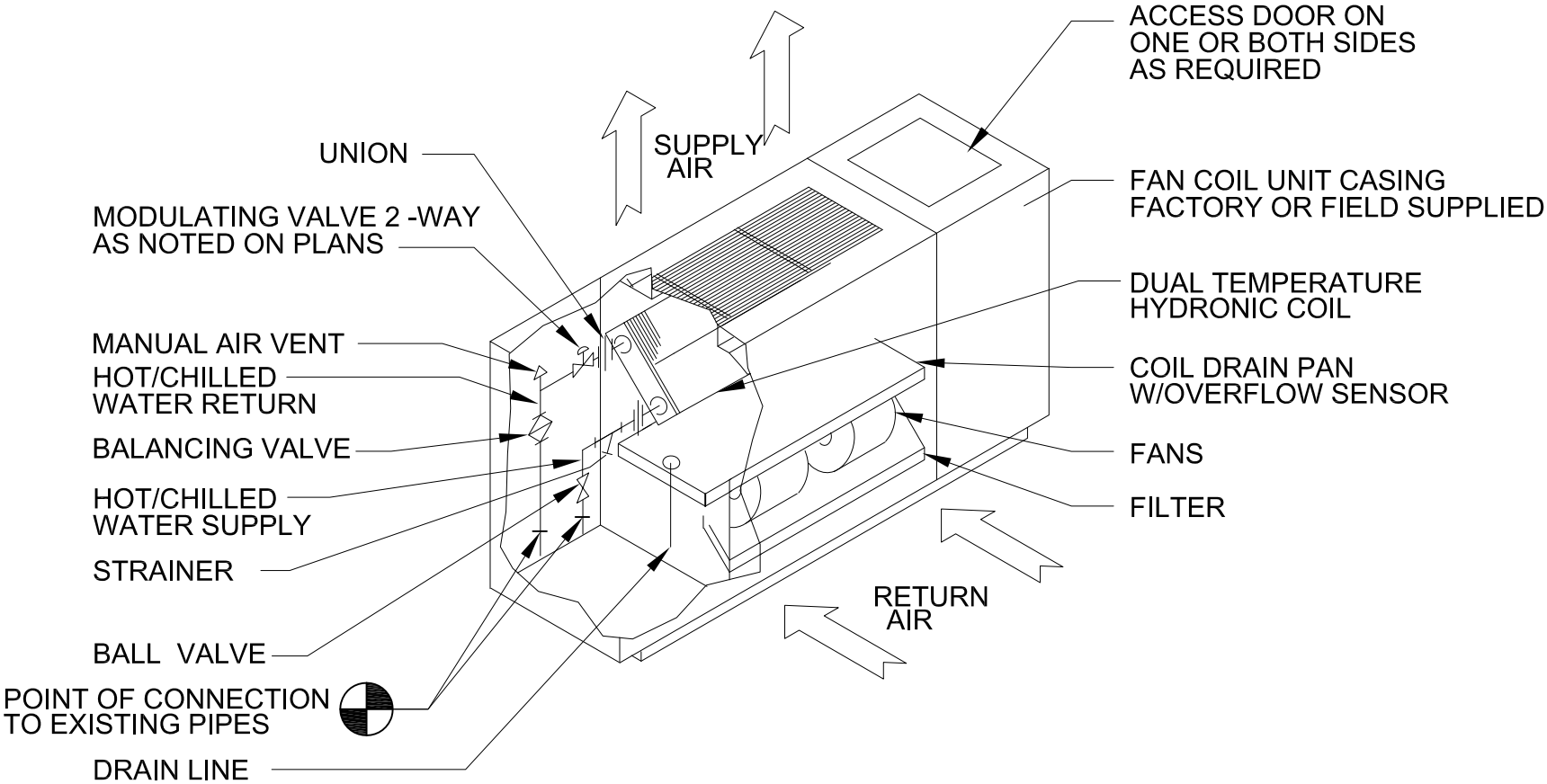

VERTICAL NON-DUCTED TWO PIPE FAN COIL UNIT PIPING DETAIL

FC-1 24V

Tag Cover Sheet
Unit Report
Certified Drawing
Performance Report

Unit Report For FC-1 24V

Project: NRL Bldg 30_222 07/17/2014
Prepared By: Michael Spencer 03:52AM

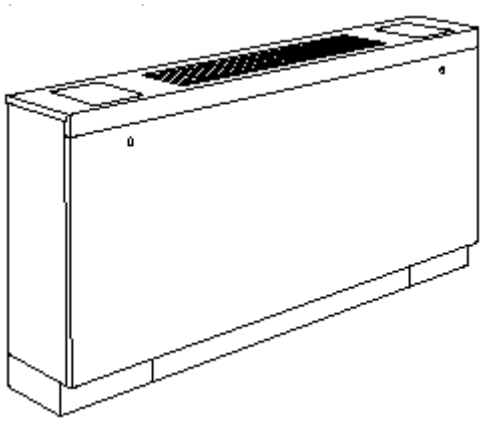

Unit Parameters

Tag Name: **FC-1 24V**
Quantity: **1**
Unit Model: **42VBC04ALAYDADAR**
Unit Type: **42VB Vertical Cabinet**
Unit Size: **400 CFM**
Shipping Options: **Standard**
Fan Speed: **High**
Motor/Drive: **ECM Motor 3 Discrete Speed**

Dimensions

Unit Length: **9.00** in
Unit Width: **51.00** in
Unit Height: **25.00** in
Shipping Weight: **116** lb

Coil Parameters

System Type: **2-Pipe Heating and Cooling**
Cooling Coil: **Cold Fluid Cooling**
Cooling Coil Rows: **3 rows**
Coil Hand: **Left Hand**

Electrical

Motor Voltage: **115-1-60 ECM V2 3-Speed w/ Potentiometer** V-Ph-Hz

Warranty Information

First Year - Parts Only (Standard)

Ordering Information

Part Number	Description	Quantity
Base Unit		
	42VBC04ALAYDADAR	1
	42VBC04:Vertical Cabinet Fan Coil Unit 400 CFM Cooling 115-1-60 ECM V2 3-Speed w/ Potentiometer	
	1-in. Leveling Legs Set	
	Tamperproof "Camloc" on both cabinet control doors, 42VB, VF, VE.	
	(2) Union Fittings, Cooling Coil	
	(1) Ball and (1) Circuit Setter	
	2-way Proportional Modulating Actuator, Cooling Coil	
	20 Amp Non-Fused Unit Mounted On/Off Service Switch	
	115-1-60 ECM V2 3 Discrete Speed with Potentiometer field speed adjustment	
	Unit Arrangement 5 + Closed Cell Fiberglass	
	Strainer, Supply Line, Cooling Coil	
	2-way Proportional Modulating, Supply Line, Cooling Coil	
	Condensate Overflow Switch	
	24V Controls by other	
	1/2 in. (5 GPM Maximum)	

Carrier
A United Technologies Company

THISDOCUMENTIS THE PROPERTY OFCARRIER CORPORATION AND IS DELIVERED UPON THE EXPRESS CONDITIONTHATTHE CONTENTSWILL NOTBE DISCLOSEDORUSED WITHOUTCARRIER CORPORATIONSWRITTENCONSENT

SUBMISSION OF THESE DRAWINGS OR DOCUMENTS DOES NOT CONSTITUTE PART PERFORMANCEOR ACCEPTANCE OFCONTRACT

VERTICALCABINETUNIT WITHTOP SUPPLY & FRONTRETURN

42VBC

NOTE:
1.R.H. shown, L.H. opposite.
2.Alldimensions ±1/4".
3.Cabinet is Arctic Whitepolyester powder coat paint

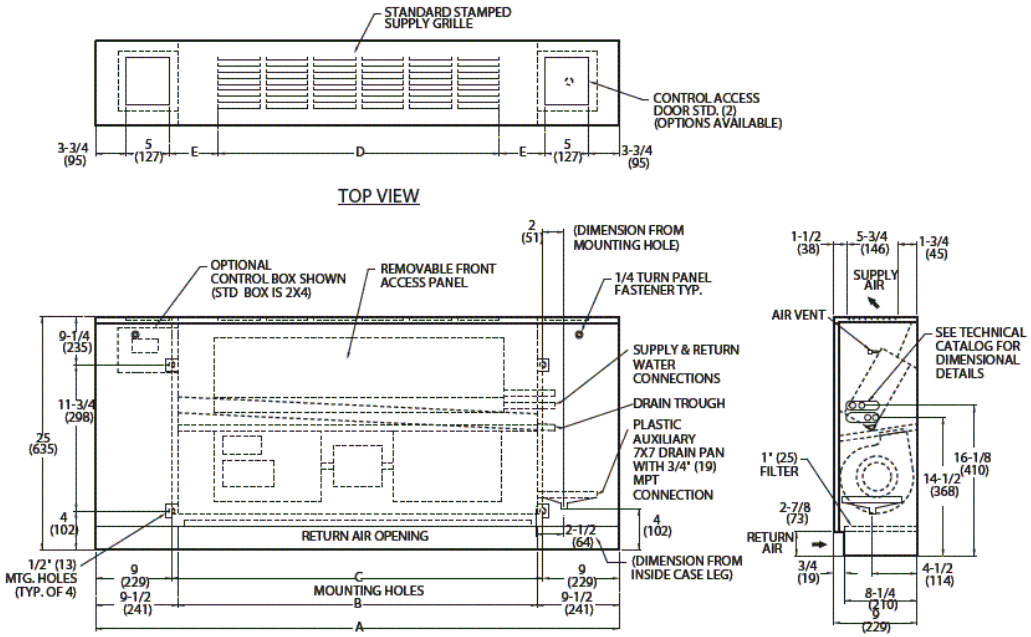

UNIT MODEL	NOM CFM	DIMENSION- INCHES					FILTER SIZE(in)	QUANTITY/UNIT	
		A	B	C	D	E		BLWR	MOTOR
42VBC02	200	41	22	23	17-1/4	3-1/8	7-3/4 x 21-3/4	1	1
42VBC03	300	41	22	23	17-1/4	3-1/8	7-3/4 x 21-3/4	1	1
42VBC04	400	51	32	33	26	3-3/4	7-3/4 x 31-3/4	2	1
42VBC06	600	61	42	43	39	2-1/4	7-3/4 x 41-3/4	2	1
42VBC08	800	63	44	45	39	3-1/4	7-3/4 x 43-3/4	2	1
42VBC10	1000	77	58	59	52-1/8	3-5/8	7-3/4 x 57-3/4	4	2
42VBC12	1200	85	66	67	61	3-1/4	7-3/4 x 65-3/4	4	2

JOBNAME

JOBNUMBER

DATE
10/25/2013

Carrier

DRAWINGNUMBER
42VB-202-1

REVISION
F

SHEET
1 OF 1

Certified Drawing for FC-1 24V

THIS DOCUMENTS THE PROPERTY OF CARRIER CORPORATION AND IS DELIVERED UPON THE EXPRESS CONDITION THAT THE CONTENTS WILL NOT BE DISCLOSED OR USED WITHOUT CARRIER CORPORATION'S WRITTEN CONSENT

SUBMISSION OF THESE DRAWINGS OR DOCUMENTS DOES NOT CONSTITUTE PART PERFORMANCE OR ACCEPTANCE OF CONTRACT

42VA, VB, VF Optional Coil Connection Location Size 02 through 12

42V

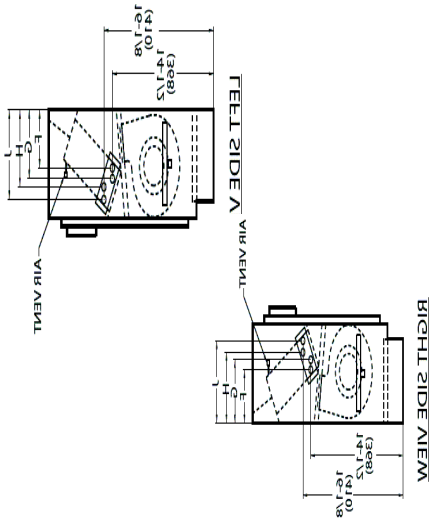

Dimensions (Inches)										
Unit Size	Left Side Dimension				1 Row Heat w/3 Row Coil		1 Row Heat w/4 Row Coil		2 Row Heat w/3 Row Coil	
	3-Rows Coil		4-Rows Coil							
	H	F	H	F	G	J	G	J	G	J
02	4-1/2	4-1/2	NA	NA	6-1/4	5-1/2	NA	NA	6	6-1/4
03	4-3/4	6	5-1/4	4-1/4	7	6-1/4	5-1/2	7-1/4	7-1/4	6-3/4
04	4-1/8	5-1/2	5-3/4	5-1/4	7-1/2	7-1/4	7-1/4	6-1/2	7-1/4	5-3/4
06	5-1/4	5	6-1/4	6	7	6-3/8	7-1/4	7-1/4	7-1/8	7-1/4
08	5-1/4	5	6-1/4	6	7	6-3/8	7-1/4	7-1/4	7-1/8	7-1/4
10	5-3/4	5-1/4	5-3/4	5-1/4	7-1/4	7-1/2	7-3/8	7-1/2	7-1/4	7-1/2
12	4-3/4	4-1/2	5-3/4	5-1/4	6-1/2	6-1/2	7-1/4	7-1/2	7-1/4	7-1/2

Dimensions (Inches)										
Unit Size	Right Side Dimension				1 Row Heat w/3 Row Coil		1 Row Heat w/4 Row Coil		2 Row Heat w/3 Row Coil	
	3-Rows Coil		4-Rows Coil							
	H	F	H	F	G	J	G	J	G	J
02	4-1/4	4-1/4	NA	NA	7-3/4	5-3/4	NA	NA	5-3/4	5-3/4
03	5-1/2	4-1/4	6-1/4	4-3/4	6	6-1/4	7	7-1/2	7-1/2	6-3/4
04	4-3/4	4-1/2	5-3/4	5-1/4	7	6-1/2	6	6-3/4	7	5-3/4
06	4-3/8	4-1/4	5-1/2	5-1/8	6	6-1/4	7	7-1/8	6-1/4	7-1/4
08	4-3/8	4-1/4	5-1/2	5-1/8	6	6-1/4	7	7-1/8	6-1/4	7-1/4
10	5-3/4	5-1/2	5-3/4	5-1/2	7-1/4	7-1/2	7-1/2	7-1/2	7-1/4	7-1/2
12	6-1/4	5-1/4	5-1/2	5-1/4	6-1/4	6-1/2	7-1/4	7-1/4	7	7-1/4

Notes:
1. All dimensions are +/- ¼".
2. Product specifications are subjected to change without notice.
3. Same end connection. Consult factory for opposite end applications.

JOB NAME		
JOB NUMBER		
DATE 02/04/2014		
DRAWING NUMBER 42V-203-1	REVISION A	SHEET 1 OF 1

Performance Summary For FC-1 24V

Project: NRL Bldg 30_222 07/17/2014
Prepared By: Michael Spencer 03:52AM

Unit Parameters

Tag Name:	**FC-1 24V**
Quantity:	**1**
Unit Model:	**42VBC04ALAYDADAR**
Unit Type:	**42VB Vertical Cabinet**
Unit Size:	**400 CFM**
System Type:	**2-Pipe Heating and Cooling**
Cooling Coil:	**Cold Fluid Cooling**
Cooling Coil Rows:	**3 rows**
Heating Coil:	**Hot Fluid Heating**
Coil Hand:	**Left Hand**
Coil Wrapping:	**Condensate Overflow Switch**
Shipping Options:	**Standard**
Fan Speed:	**High**
Motor/Drive:	**ECM Motor 3 Discrete Speed**

Unit Performance

Actual Airflow:	**449.0**	CFM
Altitude:	**0**	ft
External Static Pressure:	**.00**	in wg

Voltage: **115-1-60 ECM V2 3-Speed w/ Potentiometer** V-Ph-Hz

Cooling Data

Coil Type:	**Cold Fluid Cooling**	
Coil Rows:	**3 rows**	
Fluid Type:	**Fresh Water**	
Total Capacity:	**11,608**	BTU/hr
Sensible Capacity:	**9,317**	BTU/hr
Entering Air Dry Bulb Temperature:	**78.0**	F
Entering Air Wet Bulb Temperature:	**65.0**	F
Leaving Air Dry Bulb Temperature:	**59.0**	F
Leaving Air Wet Bulb Temperature:	**56.6**	F
Fluid Flow Rate:	**2.3**	gpm
Fluid Pressure Drop:	**10.76**	ft wg
Fluid Entering Temperature:	**42.0**	F
Fluid Leaving Temperature:	**52.0**	F

Heating Data

Coil Type:	**Hot Fluid Heating**	
Fluid Type:	**Fresh Water**	
Sensible Capacity:	**17,037**	BTU/hr
Entering Air Temperature:	**78.0**	F
Leaving Air Temperature:	**112.7**	F
Fluid Flow Rate:	**.5**	gpm
Fluid Entering Temperature:	**180.0**	F
Fluid Leaving Temperature:	**113.2**	F
Fluid Pressure Drop:	**.54**	ft wg

Electrical Data

Motor Voltage: **115-1-60 ECM V2 3-Speed w/ Potentiometer** V-Ph-Hz
Motor FLA (per motor): **2.4**

Factory-Installed Options

Unit Arrangement:	**Front Return / Top Supply**
Filters:	**Std 1 in. Throwaway**
Drain Pans:	**Standard Drain Pan**
Coil Hand:	**Left Hand**
Leveling Legs:	**1-in. Leveling Legs Set**
Camloc Fasteners:	**Tamperproof "Camloc**
AAV / Drains:	**Manual Air Vents only**
Control Packages:	**24V Controls by other**
Switches:	**20A Non-Fused Unit-Mtd On-Off Service Switch**
Insulation:	**Closed Cell Insulation**
Packaging:	**Standard**
Condensate:	**Condensate Overflow Switch**

FC-2 24V

Tag Cover Sheet
Unit Report
Certified Drawing
Performance Report

Unit Report For FC-2 24V

Project: NRL Bldg 30_222 07/17/2014
Prepared By: Michael Spencer 03:52AM

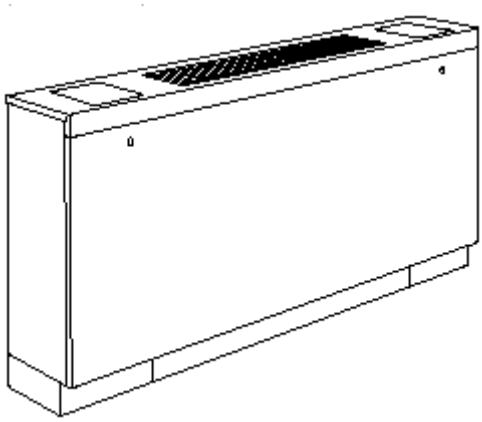

Unit Parameters

Tag Name: **FC-2 24V**
Quantity: **1**
Unit Model: **42VBC02ALAYDADAR**
Unit Type: **42VB Vertical Cabinet**
Unit Size: **200 CFM**
Shipping Options: **Standard**
Fan Speed: **High**
Motor/Drive: **ECM Motor 3 Discrete Speed**

Dimensions

Unit Length: **9.00** in
Unit Width: **41.00** in
Unit Height: **25.00** in
Shipping Weight: **89** lb

Coil Parameters

System Type: **2-Pipe Heating and Cooling**
Cooling Coil: **Cold Fluid Cooling**
Cooling Coil Rows: **3 rows**
Coil Hand: **Left Hand**

Electrical

Motor Voltage: **115-1-60 ECM V2 3-Speed w/ Potentiometer** V-Ph-Hz

Warranty Information

First Year - Parts Only (Standard)

Ordering Information

Part Number	Description	Quantity
Base Unit		
	42VBC02ALAYDADAR	1
	42VBC02:Vertical Cabinet Fan Coil Unit 200 CFM Cooling 115-1-60 ECM V2 3-Speed w/ Potentiometer	
	1-in. Leveling Legs Set	
	Tamperproof "Camloc" on both cabinet control doors, 42VB, VF, VE.	
	(2) Union Fittings, Cooling Coil	
	(1) Ball and (1) Circuit Setter	
	2-way Proportional Modulating Actuator, Cooling Coil	
	20 Amp Non-Fused Unit Mounted On/Off Service Switch	
	115-1-60 ECM V2 3 Discrete Speed with Potentiometer field speed adjustment	
	Unit Arrangement 5 + Closed Cell Fiberglass	
	Strainer, Supply Line, Cooling Coil	
	2-way Proportional Modulating, Supply Line, Cooling Coil	
	Condensate Overflow Switch	
	24V Controls by other	
	1/2 in. (5 GPM Maximum)	

Carrier
A United Technologies Company

THISDOCUMENTIS THE PROPERTY OFCARRIER CORPORATION AND IS DELIVERED UPON THE EXPRESS CONDITIONTHATTHE CONTENTSWILL NOTBE DISCLOSEDORUSED WITHOUTCARRIER CORPORATIONSWRITTENCONSENT

SUBMISSION OF THESE DRAWINGS OR DOCUMENTS DOES NOT CONSTITUTE PART PERFORMANCEOR ACCEPTANCE OFCONTRACT

VERTICALCABINETUNIT WITHTOP SUPPLY & FRONTRETURN

42VBC

NOTE:
1.R.H. shown, L.H. opposite.
2.Alldimensions ±1/4".
3.Cabinet is Arctic Whitepolyester powder coat paint

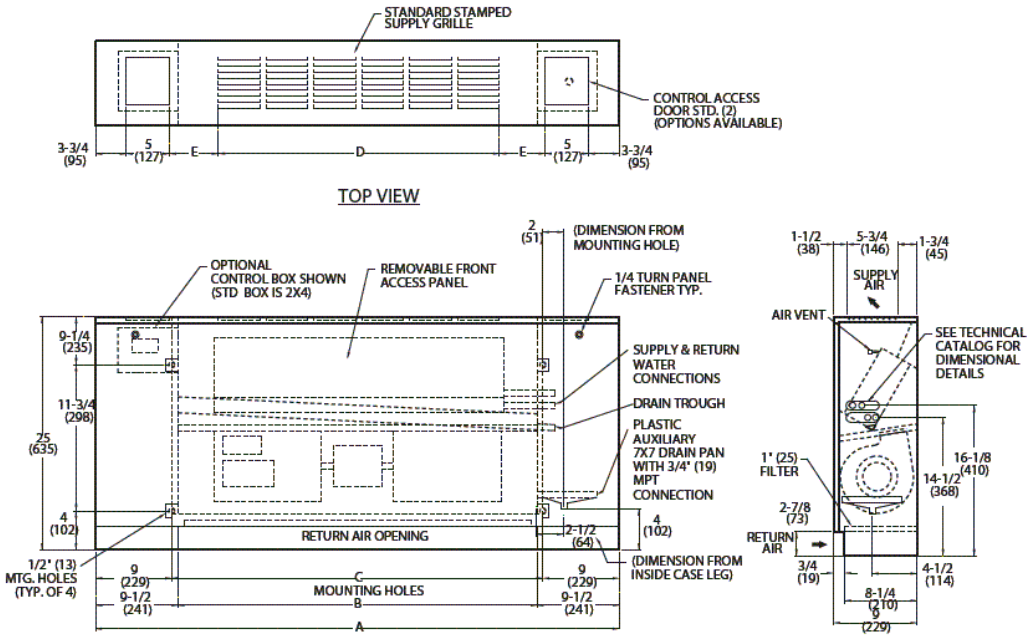

UNIT MODEL	NOM CFM	DIMENSION- INCHES					FILTER SIZE(in)	QUANTITY/UNIT	
		A	B	C	D	E		BLWR	MOTOR
42VBC02	200	41	22	23	17-1/4	3-1/8	7-3/4 x 21-3/4	1	1
42VBC03	300	41	22	23	17-1/4	3-1/8	7-3/4 x 21-3/4	1	1
42VBC04	400	51	32	33	26	3-3/4	7-3/4 x 31-3/4	2	1
42VBC06	600	61	42	43	39	2-1/4	7-3/4 x 41-3/4	2	1
42VBC08	800	63	44	45	39	3-1/4	7-3/4 x 43-3/4	2	1
42VBC10	1000	77	58	59	52-1/8	3-5/8	7-3/4 x 57-3/4	4	2
42VBC12	1200	85	66	67	61	3-1/4	7-3/4 x 65-3/4	4	2

JOBNAME

JOBNUMBER

DATE
10/25/2013

DRAWINGNUMBER
42VB-202-1

REVISION
F

SHEET
1 OF 1

Certified Drawing for FC-2 24V

THIS DOCUMENT IS THE PROPERTY OF CARRIER CORPORATION AND IS DELIVERED UPON THE EXPRESS CONDITION THAT THE CONTENTS WILL NOT BE DISCLOSED OR USED WITHOUT CARRIER CORPORATION'S WRITTEN CONSENT

SUBMISSION OF THESE DRAWINGS OR DOCUMENTS DOES NOT CONSTITUTE PART PERFORMANCE OR ACCEPTANCE OF CONTRACT

42VA, VB, VF Optional Coil Connection Location Size 02 through 12

42V

Dimensions (Inches)										
Unit Size	Left Side Dimension				1 Row Heat w/3 Row Coil		1 Row Heat w/4 Row Coil		2 Row Heat w/3 Row Coil	
	3-Rows Coil		4-Rows Coil							
	H	F	H	F	G	J	G	J	G	J
02	4-1/2	4-1/2	NA	NA	6-1/4	5-1/2	NA	NA	6	6-1/4
03	4-3/4	6	5-1/4	4-1/4	7	6-1/4	5-1/2	7-1/4	7-1/4	6-3/4
04	4-1/8	5-1/2	5-3/4	5-1/4	7-1/2	7-1/4	7-1/4	6-1/2	7-1/4	5-3/4
06	5-1/4	5	6-1/4	6	7	6-3/8	7-1/4	7-1/4	7-1/8	7-1/4
08	5-1/4	5	6-1/4	6	7	6-3/8	7-1/4	7-1/4	7-1/8	7-1/4
10	5-3/4	5-1/4	5-3/4	5-1/4	7-1/4	7-1/2	7-3/8	7-1/2	7-1/4	7-1/2
12	4-3/4	4-1/2	5-3/4	5-1/4	6-1/2	6-1/2	7-1/4	7-1/2	7-1/4	7-1/2

Dimensions (Inches)										
Unit Size	Right Side Dimension				1 Row Heat w/3 Row Coil		1 Row Heat w/4 Row Coil		2 Row Heat w/3 Row Coil	
	3-Rows Coil		4-Rows Coil							
	H	F	H	F	G	J	G	J	G	J
02	4-1/4	4-1/4	NA	NA	7-3/4	5-3/4	NA	NA	5-3/4	5-3/4
03	5-1/2	4-1/4	6-1/4	4-3/4	6	6-1/4	7	7-1/2	7-1/2	6-3/4
04	4-3/4	4-1/2	5-3/4	5-1/4	7	6-1/2	6	6-3/4	7	5-3/4
06	4-3/8	4-1/4	5-1/2	5-1/8	6	6-1/4	7	7-1/8	6-1/4	7-1/4
08	4-3/8	4-1/4	5-1/2	5-1/8	6	6-1/4	7	7-1/8	6-1/4	7-1/4
10	5-3/4	5-1/2	5-3/4	5-1/2	7-1/4	7-1/2	7-1/2	7-1/2	7-1/4	7-1/2
12	6-1/4	5-1/4	5-1/2	5-1/4	6-1/4	6-1/2	7-1/4	7-1/4	7	7-1/4

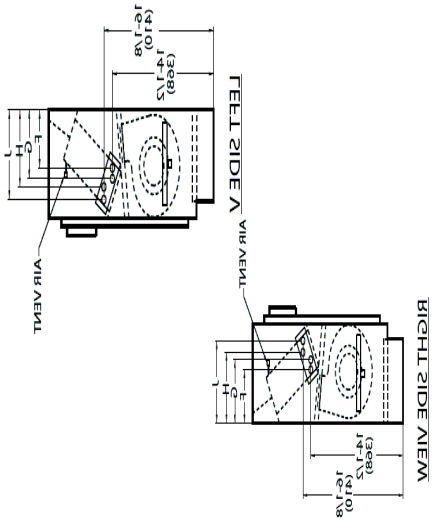

Notes:
1. All dimensions are +/- ¼".
2. Product specifications are subjected to change without notice.
3. Same end connection. Consult factory for opposite end applications.

JOB NAME		
JOB NUMBER		
DATE 02/04/2014		
DRAWING NUMBER 42V-203-1	REVISION A	SHEET 1 OF 1

Performance Summary For FC-2 24V

Project: NRL Bldg 30_222 07/17/2014
Prepared By: Michael Spencer 03:52AM

Unit Parameters

Tag Name:	**FC-2 24V**
Quantity:	**1**
Unit Model:	**42VBC02ALAYDADAR**
Unit Type:	**42VB Vertical Cabinet**
Unit Size:	**200 CFM**
System Type:	**2-Pipe Heating and Cooling**
Cooling Coil:	**Cold Fluid Cooling**
Cooling Coil Rows:	**3 rows**
Heating Coil:	**Hot Fluid Heating**
Coil Hand:	**Left Hand**
Coil Wrapping:	**Condensate Overflow Switch**
Shipping Options:	**Standard**
Fan Speed:	**High**
Motor/Drive:	**ECM Motor 3 Discrete Speed**

Unit Performance

Actual Airflow:	**242.0**	CFM
Altitude:	**0**	ft
External Static Pressure:	**.00**	in wg

Voltage: **115-1-60 ECM V2 3-Speed w/ Potentiometer** V-Ph-Hz

Cooling Data

Coil Type:	**Cold Fluid Cooling**	
Coil Rows:	**3 rows**	
Fluid Type:	**Fresh Water**	
Total Capacity:	**5,997**	BTU/hr
Sensible Capacity:	**4,547**	BTU/hr
Entering Air Dry Bulb Temperature:	**78.0**	F
Entering Air Wet Bulb Temperature:	**65.0**	F
Leaving Air Dry Bulb Temperature:	**60.8**	F
Leaving Air Wet Bulb Temperature:	**56.9**	F
Fluid Flow Rate:	**1.2**	gpm
Fluid Pressure Drop:	**16.56**	ft wg
Fluid Entering Temperature:	**42.0**	F
Fluid Leaving Temperature:	**52.0**	F

Heating Data

Coil Type:	**Hot Fluid Heating**	
Fluid Type:	**Fresh Water**	
Sensible Capacity:	**13,397**	BTU/hr
Entering Air Temperature:	**78.0**	F
Leaving Air Temperature:	**128.6**	F
Fluid Flow Rate:	**.5**	gpm
Fluid Entering Temperature:	**180.0**	F
Fluid Leaving Temperature:	**127.5**	F
Fluid Pressure Drop:	**2.73**	ft wg

Electrical Data

Motor Voltage: **115-1-60 ECM V2 3-Speed w/ Potentiometer** V-Ph-Hz
Motor FLA (per motor): **2.4**

Factory-Installed Options

Unit Arrangement:	**Front Return / Top Supply**
Filters:	**Std 1 in. Throwaway**
Drain Pans:	**Standard Drain Pan**
Coil Hand:	**Left Hand**
Leveling Legs:	**1-in. Leveling Legs Set**
Camloc Fasteners:	**Tamperproof "Camloc**
AAV / Drains:	**Manual Air Vents only**
Control Packages:	**24V Controls by other**
Switches:	**20A Non-Fused Unit-Mtd On-Off Service Switch**
Insulation:	**Closed Cell Insulation**
Packaging:	**Standard**
Condensate:	**Condensate Overflow Switch**

FC-3 24V

Tag Cover Sheet
Unit Report
Certified Drawing
Performance Report

Unit Report For FC-3 24V

Project: NRL Bldg 30_222 07/17/2014
Prepared By: Michael Spencer 03:52AM

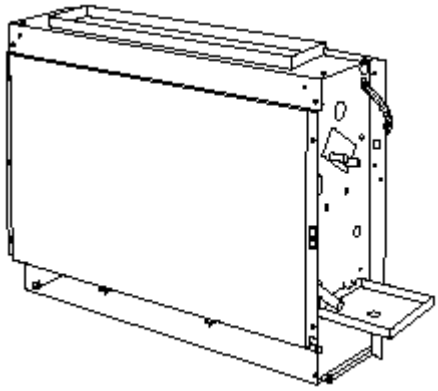

Unit Parameters

Tag Name: **FC-3 24V**
Quantity: **1**
Unit Model: **42VAC04ALAYDADAR**
Unit Type: **42VA Vertical Furred-In**
Unit Size: **400 CFM**
Shipping Options: **Standard**
Fan Speed: **High**
Motor/Drive: **ECM Motor 3 Discrete Speed**

Dimensions

Unit Length: **9.25** in
Unit Width: **35.00** in
Unit Height: **26.00** in
Shipping Weight: **90** lb

Coil Parameters

System Type: **2-Pipe Heating and Cooling**
Cooling Coil: **Cold Fluid Cooling**
Cooling Coil Rows: **3 rows**
Coil Hand: **Left Hand**

Electrical

Motor Voltage: **115-1-60 ECM V2 3-Speed w/ Potentiometer** V-Ph-Hz

Warranty Information

First Year - Parts Only (Standard)

Ordering Information

Part Number	Description	Quantity
Base Unit		
	42VAC04ALAYDADAR	1
	42VAC04:Vertical Furred-In Fan Coil Unit 400 CFM Cooling 115-1-60 ECM V2 3-Speed w/ Potentiometer	
	1-in. Leveling Legs Set	
	(2) Union Fittings, Cooling Coil	
	(1) Ball and (1) Circuit Setter	
	2-way Proportional Modulating Actuator, Cooling Coil	
	20 Amp Non-Fused Unit Mounted On/Off Service Switch	
	115-1-60 ECM V2 3 Discrete Speed with Potentiometer field speed adjustment	
	Unit Arrangement 5 + Closed Cell Fiberglass	
	Strainer, Supply Line, Cooling Coil	
	2-way Proportional Modulating, Supply Line, Cooling Coil	
	Condensate Overflow Switch	
	24V Controls by other	
	1/2 in. (5 GPM Maximum)	

Carrier
A United Technologies Company

THISDOCUMENTIS THE PROPERTY OFCARRIER CORPORATION AND IS DELIVERED UPON THE EXPRESS CONDITIONTHATTHE CONTENTSWILL NOTBE DISCLOSEDORUSED WITHOUTCARRIER CORPORATIONSWRITTENCONSENT

SUBMISSION OF THESE DRAWINGS OR DOCUMENTS DOES NOT CONSTITUTE PART PERFORMANCEOR ACCEPTANCE OFCONTRACT

VERTICALFURRED-IN WITHTOP SUPPLY & FRONTRETURN

42VAC

NOTE:
1.R.H. shown, L.H. opposite.
2.4" x 4' J-box when unit controls are not selected.
3.Alldimensions ±1/4".
4.Galvanized finish.

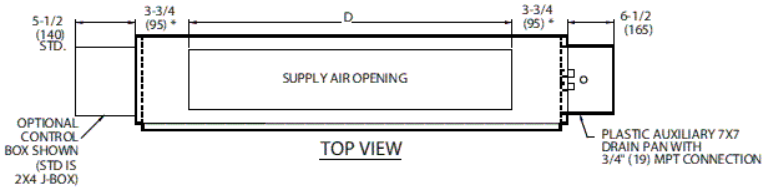

TOP VIEW

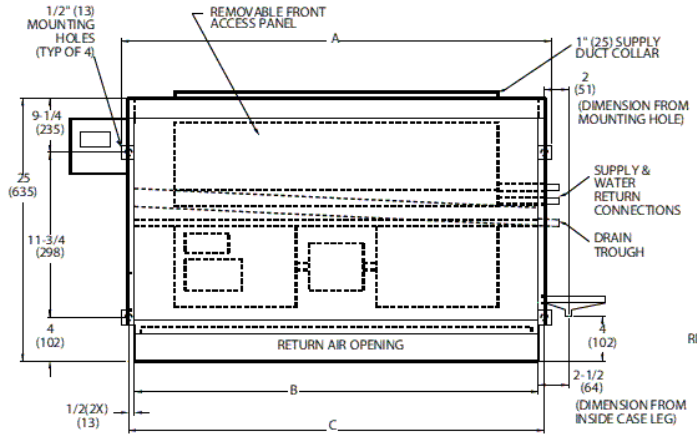

FRONT VIEW

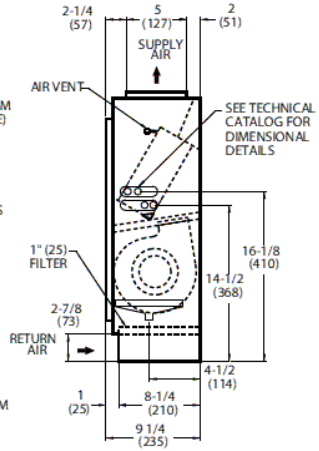

RIGHT SIDE VIEW

UNIT MODEL	NOM CFM	DIMENSION- INCHES				FILTER SIZE(in)	QUANTITY/UNIT	
		A	B	C	D		BLWR	MOTOR
42VAC02	200	24-3/16	22	23	16	7-3/4 x 21-3/4	1	1
42VAC03	300	24-3/16	22	23	18	7-3/4 x 21-3/4	1	1
42VAC04	400	34-3/16	32	33	26	7-3/4 x 31-3/4	2	1
42VAC06	600	44-3/16	42	43	36	7-3/4 x 41-3/4	2	1
42VAC08	800	46-3/16	44	45	38	7-3/4 x 43-3/4	2	1
42VAC10	1000	60-3/16	58	59	52	7-3/4 x 57-3/4	4	2
42VAC12	1200	68-3/16	66	67	60	7-3/4 x 65-3/4	4	2

JOBNAME

JOBNUMBER

DATE
10/25/2013

Carrier

DRAWINGNUMBER
42VA-202-1

REVISION
E

SHEET
1 OF 1

Certified Drawing for FC-3 24V

THIS DOCUMENTS THE PROPERTY OF CARRIER CORPORATION AND IS DELIVERED UPON THE EXPRESS CONDITION THAT THE CONTENTS WILL NOT BE DISCLOSED OR USED WITHOUT CARRIER CORPORATION'S WRITTEN CONSENT

SUBMISSION OF THESE DRAWINGS OR DOCUMENTS DOES NOT CONSTITUTE PART PERFORMANCE OR ACCEPTANCE OF CONTRACT

42VA, VB, VF Optional Coil Connection Location Size 02 through 12

42V

Dimensions (Inches)										
Unit Size	Left Side Dimension				1 Row Heat w/3 Row Coil		1 Row Heat w/4 Row Coil		2 Row Heat w/3 Row Coil	
	3-Rows Coil		4-Rows Coil							
	H	F	H	F	G	J	G	J	G	J
02	4-1/2	4-1/2	NA	NA	6-1/4	5-1/2	NA	NA	6	6-1/4
03	4-3/4	6	5-1/4	4-1/4	7	6-1/4	5-1/2	7-1/4	7-1/4	6-3/4
04	4-1/8	5-1/2	5-3/4	5-1/4	7-1/2	7-1/4	7-1/4	6-1/2	7-1/4	5-3/4
06	5-1/4	5	6-1/4	6	7	6-3/8	7-1/4	7-1/4	7-1/8	7-1/4
08	5-1/4	5	6-1/4	6	7	6-3/8	7-1/4	7-1/4	7-1/8	7-1/4
10	5-3/4	5-1/4	5-3/4	5-1/4	7-1/4	7-1/2	7-3/8	7-1/2	7-1/4	7-1/2
12	4-3/4	4-1/2	5-3/4	5-1/4	6-1/2	6-1/2	7-1/4	7-1/2	7-1/4	7-1/2

Dimensions (Inches)										
Unit Size	Right Side Dimension				1 Row Heat w/3 Row Coil		1 Row Heat w/4 Row Coil		2 Row Heat w/3 Row Coil	
	3-Rows Coil		4-Rows Coil							
	H	F	H	F	G	J	G	J	G	J
02	4-1/4	4-1/4	NA	NA	7-3/4	5-3/4	NA	NA	5-3/4	5-3/4
03	5-1/2	4-1/4	6-1/4	4-3/4	6	6-1/4	7	7-1/2	7-1/2	6-3/4
04	4-3/4	4-1/2	5-3/4	5-1/4	7	6-1/2	6	6-3/4	7	5-3/4
06	4-3/8	4-1/4	5-1/2	5-1/8	6	6-1/4	7	7-1/8	6-1/4	7-1/4
08	4-3/8	4-1/4	5-1/2	5-1/8	6	6-1/4	7	7-1/8	6-1/4	7-1/4
10	5-3/4	5-1/2	5-3/4	5-1/2	7-1/4	7-1/2	7-1/2	7-1/2	7-1/4	7-1/2
12	6-1/4	5-1/4	5-1/2	5-1/4	6-1/4	6-1/2	7-1/4	7-1/4	7	7-1/4

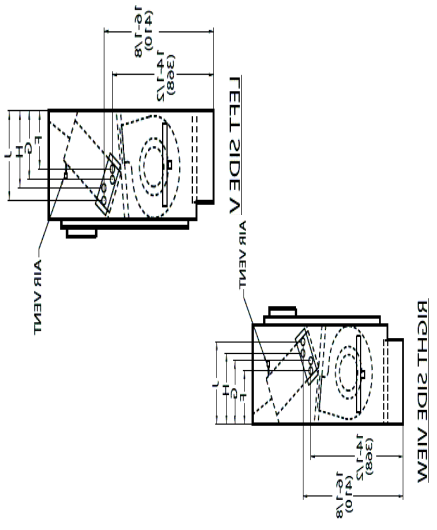

Notes:
1. All dimensions are +/- ¼".
2. Product specifications are subjected to change without notice.
3. Same end connection. Consult factory for opposite end applications.

JOB NAME		
JOB NUMBER		
DATE 02/04/2014		
DRAWING NUMBER 42V-203-1	REVISION A	SHEET 1 OF 1

Performance Summary For FC-3 24V

Project: NRL Bldg 30_222 07/17/2014
Prepared By: Michael Spencer 03:52AM

Unit Parameters

Tag Name:	**FC-3 24V**
Quantity:	**1**
Unit Model:	**42VAC04ALAYDADAR**
Unit Type:	**42VA Vertical Furred-In**
Unit Size:	**400 CFM**
System Type:	**2-Pipe Heating and Cooling**
Cooling Coil:	**Cold Fluid Cooling**
Cooling Coil Rows:	**3 rows**
Heating Coil:	**Hot Fluid Heating**
Coil Hand:	**Left Hand**
Coil Wrapping:	**Condensate Overflow Switch**
Shipping Options:	**Standard**
Fan Speed:	**High**
Motor/Drive:	**ECM Motor 3 Discrete Speed**

Unit Performance

Actual Airflow:	**449.0**	CFM
Altitude:	**0**	ft
External Static Pressure:	**.00**	in wg
Voltage:	**115-1-60 ECM V2 3-Speed w/ Potentiometer**	V-Ph-Hz

Cooling Data

Coil Type:	**Cold Fluid Cooling**	
Coil Rows:	**3 rows**	
Fluid Type:	**Fresh Water**	
Total Capacity:	**11,608**	BTU/hr
Sensible Capacity:	**9,317**	BTU/hr
Entering Air Dry Bulb Temperature:	**78.0**	F
Entering Air Wet Bulb Temperature:	**65.0**	F
Leaving Air Dry Bulb Temperature:	**59.0**	F
Leaving Air Wet Bulb Temperature:	**56.6**	F
Fluid Flow Rate:	**2.3**	gpm
Fluid Pressure Drop:	**10.76**	ft wg
Fluid Entering Temperature:	**42.0**	F
Fluid Leaving Temperature:	**52.0**	F

Heating Data

Coil Type:	**Hot Fluid Heating**	
Fluid Type:	**Fresh Water**	
Sensible Capacity:	**17,037**	BTU/hr
Entering Air Temperature:	**78.0**	F
Leaving Air Temperature:	**112.7**	F
Fluid Flow Rate:	**.5**	gpm
Fluid Entering Temperature:	**180.0**	F
Fluid Leaving Temperature:	**113.2**	F
Fluid Pressure Drop:	**.54**	ft wg

Electrical Data

Motor Voltage:	**115-1-60 ECM V2 3-Speed w/ Potentiometer**	V-Ph-Hz
Motor FLA (per motor):	**2.4**	

Factory-Installed Options

Unit Arrangement:	**Front Return / Top Supply**
Filters:	**Std 1 in. Throwaway**
Drain Pans:	**Standard Drain Pan**
Coil Hand:	**Left Hand**
Leveling Legs:	**1-in. Leveling Legs Set**
AAV / Drains:	**Manual Air Vents only**
Control Packages:	**24V Controls by other**
Switches:	**20A Non-Fused Unit-Mtd On-Off Service Switch**
Insulation:	**Closed Cell Insulation**
Packaging:	**Standard**
Condensate:	**Condensate Overflow Switch**

VT7300 Series
24 Vac Low Voltage Fan Coil Thermostats
For Commercial and Lodging HVAC Applications

(Issue Date: August 10, 2007 – 028-0125 R6)

Product overview

The VT7300 PI thermostat family is specifically designed for fan coil control. The product features a backlit LCD display with dedicated function menu buttons for simple operation. Accurate temperature control is achieved due to the product's PI proportional control algorithm, which virtually eliminates temperature offset associated with traditional, differential-based thermostats.

Models are available for On/Off, 3 point floating and analog 0 to 10 Vdc control.

All models contain can control three, two or single fan speed. 3 additional inputs are also provided for various functions.

All models feature configurable System and Fan button functions to meet all possible applications. They all contain an SPST auxiliary switch that can be used to control lighting or auxiliary reheat.

The additional following documentation is available on www.viconics.com

- Information on the LON models (VT73xxX1000E), is available on document ITG-VT7300-LON-Exx
- Information on the BACnet models (VT73xxX1000B), is available on document ITG-VT7300-BAC-Exx

Models available

Viconics number	VT7300A1000	VT7300C1000	VT7350C1000	VT7305A1000	VT7305C1000	VT7355C1000	VT7300F1000	VT7350F1000	VT7305F1000	VT7355F1000
Application	2 & 4 Pipe On/Off	2 & 4 Pipe Floating & On/Off		2 & 4 Pipe On/Off	2 & 4 Pipe Floating & On/Off		2 & 4 Pipe Analog 0-10 Vdc			
RH sensor	No	No	Yes	No	No	Yes	No	Yes	No	Yes
Market	**Commercial / Institution**			**Hotels / Lodging**			**Commercial / Institution**		**Hotels / Lodging**	

Features and benefits

Features	Benefits
• Models available with internal humidity sensing	⇒ Increased occupant comfort through dehumidification
• Advanced occupancy functions	⇒ Through the network or smart local occupancy sensing
• 3 configurable inputs	⇒ Adds functionality
• Configurable sequences of operation	⇒ Single model meets more applications
• Configurable fan functions button	⇒ Meets more applications with a single model
• Unique configuration setup utility	⇒ Minimizes parameter tampering
• Multi level lockable keypad	⇒ Tamper proof, no need for thermostat guards
• Auto Fan speed mode	⇒ Increased occupant comfort in cooling mode by reducing humidity and offer less fan noise in all mode of operation
• Available for 24 Vac On/Off, Floating or Analog control	⇒ Meet advanced applications requirements
• Auxiliary output	⇒ Can be used for lighting or reheat

Programmable BI/UI inputs overview

Binary input #1 can be configured for the following functions:

1. **(None):** No function will be associated with the input
2. **(Rem NSB):** remote NSB timer clock input. The scheduling will now be set as per the binary input. It provides low cost setback operation via a dry contact
   - Contact opened = Occupied
   - Contact closed = Unoccupied
3. **(Motion NO):** remote NSB using a motion detector. The occupancy will now be set as per the binary input. Contact opened = Unoccupied. When the contact closes momentarily, the thermostat goes into occupied mode for the time specified by the ToccTime timer. The timer can reset at the end of its cycle if new movements are detected in the area.
4. **(Motion NC):** remote NSB using a motion detector. The occupancy will now be set as per the binary input. Contact closed = Unoccupied. When the contact opens momentarily, the thermostat goes into occupied mode for the time specified by the ToccTime timer. The timer can reset at the end of its cycle if new movements are detected in the area.
5. **(Window) EMS:** Forces the system to disable any current heating or cooling action by the thermostat. The mode stays the same and the current setpoints are the same Occupied setpoints. Only the outputs are disabled. There is a Door/Window alarm displayed on the thermostat to indicate to the local tenant that the door/window needs to be closed for cooling or heating to resume. Use NC contact.
   - Contact opened = System disabled with local Window alarm
   - Contact closed = System enabled

Binary input #2 can be configured for the following functions:

1. **(None):** No function will be associated with the input
2. **(Door Dry) Door contact & Motion detector:** This configuration is only functional if binary input #1 is set to **Motion NO** or **Motion NC**.

   BI1 is connected to a motion detector & BI2 is connected to a door contact switch. With this sequence enabled, the occupancy is now dictated through those 2 inputs. Any motion detected will set the zone to occupied status. The zone will remain permanently in occupied mode until the door contact switch opens momentarily. The thermostat will then go in unoccupied mode. If more movements are detected, the occupied mode will resume. If the door stays open more than the time value specified by the **doortime** parameter, the zone will remain unoccupied. Use NC contact.
   - Contact opened = Door opened
   - Contact closed = Door closed
3. **(RemOVR):** temporary occupancy remote override contact. This function disables the central button override function on the thermostat. The override function is now controlled by a manual remote momentarily closed contact. When configured in this mode, the input operates in a toggle mode.

   It is now possible to toggle between unoccupied & occupied setpoints for the amount of time set by parameter (TOccTime) temporary occupancy time.
4. **(Filter):** a backlit flashing **Filter** alarm will be displayed on the thermostat LCD screen when the input is energized. It can be tied to a differential pressure switch that monitor filters
   - Contact opened = No alarm
   - Contact closed = Alarm displayed
5. **(Service):** a backlit flashing Service alarm will be displayed on the thermostat LCD screen when the input is energized. It can be tied in to the AC unit control card, which provides an alarm in case of malfunction.
   - Contact opened = No alarm
   - Contact closed = Alarm displayed

Universal input #3 can be configured for the following functions:

1. **(None):** No function will be associated with the input
2. **(COC/NH) Change over dry contact. Normally Heat:** Used for hot / cold water change over switching in 2 pipe systems.
   - Contact closed = Cold water present
   - Contact opened = Hot water present

   Only used and valid if system is setup as 2 pipes. Parameter (Pipe No) set as 2 pipes.
3. **(COC/NC) Change over dry contact. Normally Cool:** Used for hot / cold water or air change over switching in 2 pipe systems.
   - Contact closed = Hot water present
   - Contact opened = Cold water present

   Only used and valid if system is setup as 2 pipes. Parameter (Pipe No) set as 2 pipes.
4. **(COS) Change over analog sensor:** Used for hot / cold water or air change over switching in 2 pipe systems.
   Only used and valid if system is setup as 2 pipes. Parameter (Pipe No) set as 2 pipes.

- If water temperature is > 77 °F = Hot water present
- If water temperature is < 75 °F = Cold water present

5. **(SS) Supply air sensor monitoring:** Used for supply air temperature monitoring.
   Only used for network reporting of the supply air temperature. Has no internal function in the thermostat.

   .

Installation

- Remove security screw on the bottom of thermostat cover.
- Open up by pulling on the bottom side of thermostat.
- Remove Assembly and remove wiring terminals from sticker. **(Fig. 3)**

A) **Location:**

1- Should not be installed on an outside wall.
2- Must be installed away from any heat source.
3- Should not be installed near an air discharge grill.
4- Should not be affected by direct sun radiation.
5- Nothing must restrain vertical air circulation to the thermostat.

B) **Installation:**

1- Swing open the thermostat PCB to the left by pressing the PCB locking tabs. **(Fig. 4)**
2- Pull out cables 6” out of the wall.
3- Wall surface must be flat and clean.
4- Insert cable in the central hole of the base.
5- Align the base and mark the location of the two mounting holes on the wall. Install proper side of base up.
6- Install anchors in the wall.
7- Insert screws in mounting holes on each side of the base. **(Fig. 4)**
8- Gently swing back the circuit board on the base and push on it until the tabs lock it.
10- Strip each wire 1/4 inch.
11- Insert each wire according to wiring diagram.
13- Gently push back into hole excess wring **(Fig. 5)**
14- Re-Install wiring terminals in correct location. **(Fig. 5)**
15- Reinstall the cover (top side first) and gently push back extra wire length into the hole in the wall.
16- Install security screw.

- If replacing an old thermostat, label the wires before removal of the old thermostat.
- Electronic controls are static sensitive devices. Discharge yourself properly before manipulation and installing the thermostat.
- Short circuit or wrong wiring may permanently damage the thermostat or the equipment.
- Anti-short cycling can be set to 0 minutes for equipment that posses their own anti cycling timer. Do not use that value unless the equipment is equipped with such internal timer. Failure to do so can damage the equipment.
- All VT7000 series thermostats are to be used only as operating controls. Whenever a control failure could lead to personal injury and/or loss of property, it becomes the responsibility of the user to add safety devices and/or alarm system to protect against such catastrophic failures.

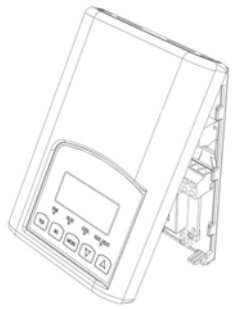

Fig.3

Location of PCB retaining tabs

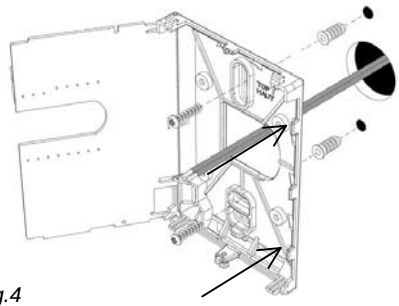

Fig.4

Re-install terminal blocks

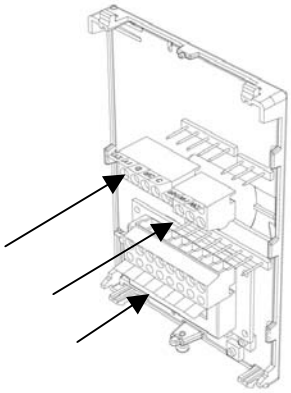

Fig.5

Thermostat assembly
(VT7300F1000 shown)

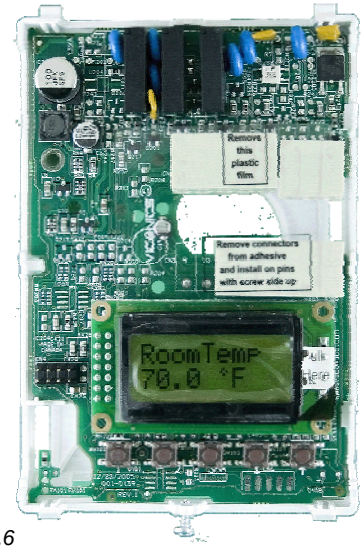

Fig.6

Terminal identification

Viconics number	VT73xxA10xx	VT73xxC10xx	Viconics number	VT73xxF10xx
Description / application	2 & 4 Pipe On/Off	2 & 4 Pipe Floating	Description / application	2 & 4 Pipe Analog
		2 & 4 Pipe On/Off		
Internal temperature	X	X	Internal temperature	X
Internal humidity		Model dependent	Internal humidity	Model dependent
1- High Fan Speed	Fan-H	Fan-H	1- High Fan Speed	Fan-H
2- Medium Fan Speed	Fan-M	Fan-M	2- Medium Fan Speed	Fan-M
3- Low Fan Speed	Fan-L	Fan-L	3- Low Fan Speed	Fan-L
4- 24 V~ Hot	24 V~ Hot	24 V~ Hot	4- 24 V~ Hot	24 V~ Hot
5- 24 V~ Com	24 V~ Com	24 V~ Com	5- 24 V~ Com	24 V~ Com
6- Aux BO 5	BO 5-Aux	BO 5-Aux	6- Aux BO 5	BO 5-Aux
7- Aux BO 5	BO 5-Aux	BO 5-Aux	7- Aux BO 5	BO 5-Aux
8- BO 3 Open Heat	BO 3	BO 3		
9- BO 4 Close Heat		BO 4	9- AO 2 Heat	AO 2
10- BO 1 Open Cool		BO 1	10- AO 1 Cool	AO 1
11- BO 2 Close Cool	BO 2	BO 2	Not used Blank	*Blank*
12- BI #1	BI 1	BI 1	12- BI #1	BI 1
13- RS	RS	RS	13- RS	RS
14- Scom	Scom	Scom	14- Scom	Scom
15- BI #2	BI 2	BI 2	15- BI #2	BI 2
16- UI #3 COS / COC /SS	UI 3	UI 3	16- UI #3 COS / COC /SS	UI 3

Wiring

Power & Fan (All models)

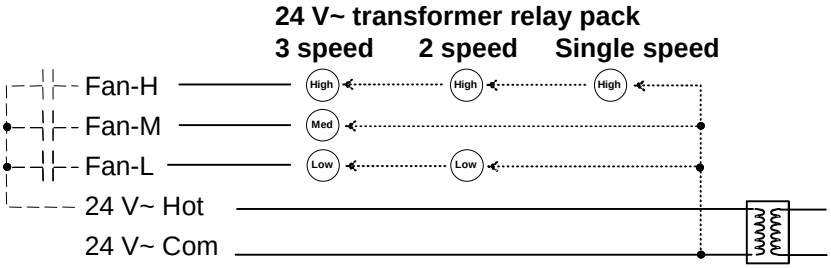

Remote inputs (All models)

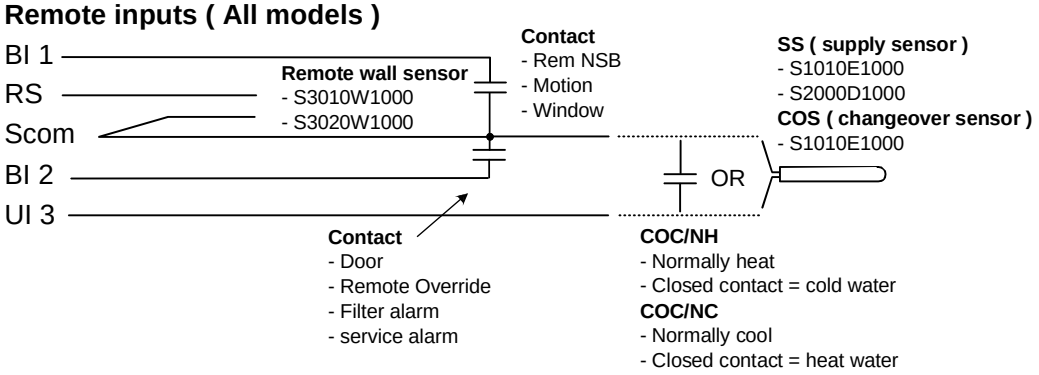

Auxiliary output (All models)

- Dry contact to end device 24 V~ maximum

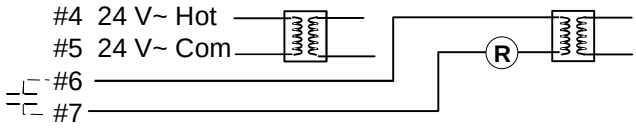

- 24 Vac power to relay

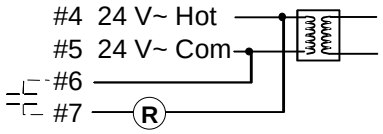

Main outputs wiring

2 Pipe applications	4 Pipe applications
On-Off control	
VT7300A1000 & VT7305AC1000	
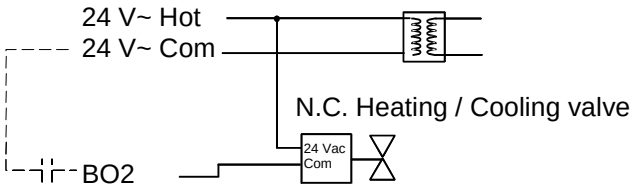	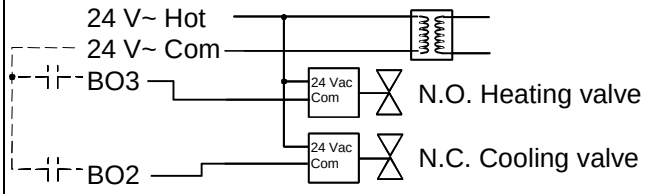
VT7300C1000, VT7305C1000, VT7350C1000 & VT7355C1000	
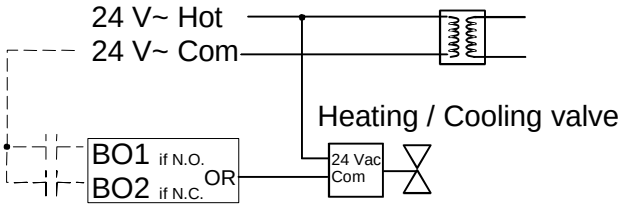	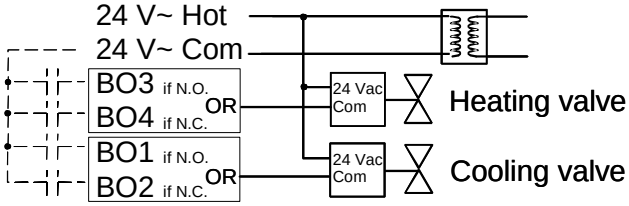
Floating control	
VT7300C1000, VT7305C1000, VT7350C1000 & VT7355C1000	
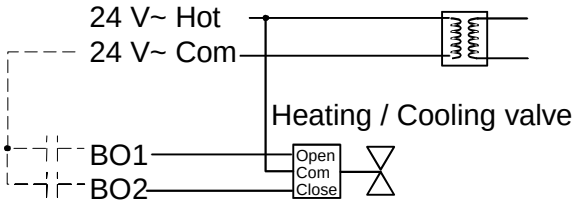	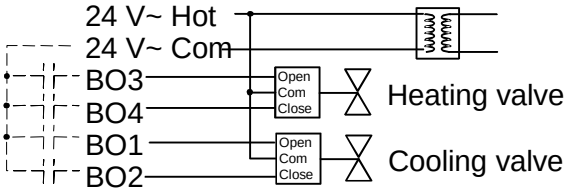
Analog control	
VT7300F1000, VT7305F1000, VT7350F1000 & VT7355F1000	
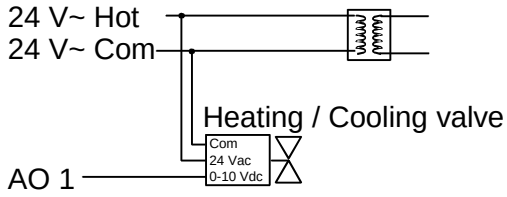	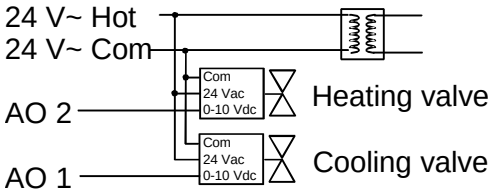

Typical applications

Schematic	Wiring	Settings
2 pipe system cooling and/or heating (VT7300A1000, VT7300C1000 & VT7305C1000) On / Off N.C. actuator		
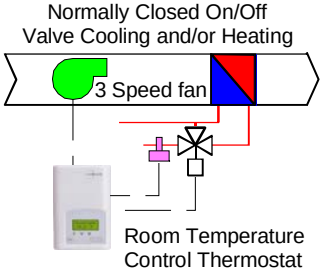	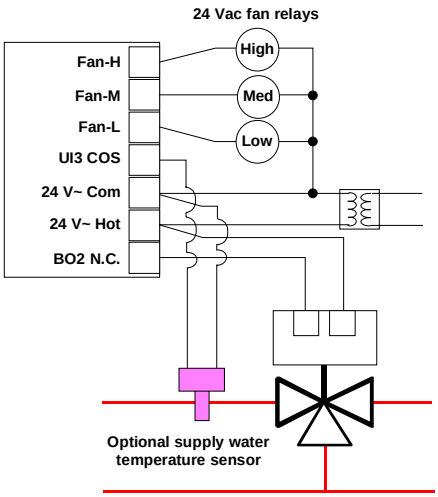	**Mandatory** • Pipe no = 2 pipes • CntrltTyp = On/Off • Fan Menu = 0 (L-M-H) • FL time = *as per actuator* If **cooling only** set:: • SeqOpera = 0 Cooling only If **heating only** set:: • SeqOpera = 1 Heating only If **heat / cool auto-changeover** with a local water temperature sensor set: • SeqOpera = 0 Cooling only • UI3 = COS
2 pipe system cooling and/or heating (VT7300C1000 & VT7305C1000) Floating actuator		
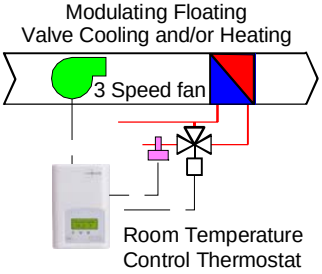	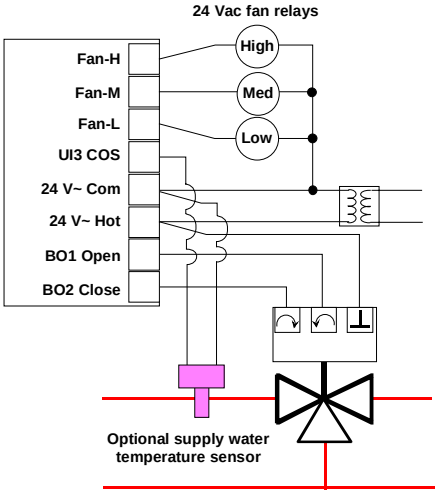	**Mandatory** • Pipe no = 2 pipes • CntrltTyp = Floating • Fan Menu = 0 (L-M-H) • FL time = *as per actuator* If **cooling only** set:: • SeqOpera = 0 Cooling only If **heating only** set:: • SeqOpera = 1 Heating only If **heat / cool auto-changeover** with a local water temperature sensor set: • SeqOpera = 0 Cooling only • UI3 = COS
2 pipe system cooling and/or heating (VT7300F1000 & VT7305F1000) Analog actuator		
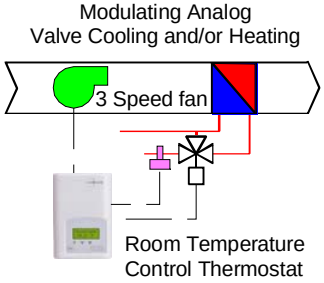	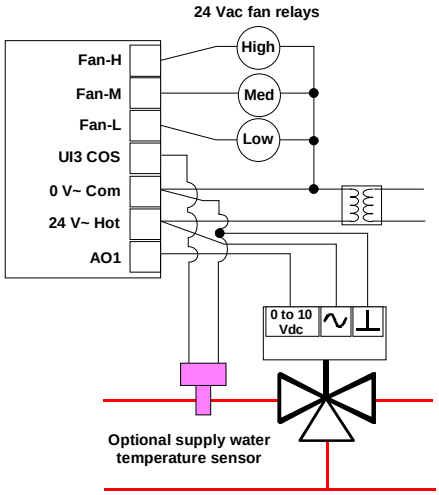	**Mandatory** • Pipe no = 2 pipes • Fan Menu = 0 (L-M-H) • RA/DA = *as per actuator* If **cooling only** set:: • SeqOpera = 0 Cooling only If **heating only** set:: • SeqOpera = 1 Heating only If **heat / cool auto-changeover** with a local water temperature sensor set: • SeqOpera = 0 Cooling only • UI3 = COS

Schematic	Wiring	Settings
4 pipe system cooling and heating (VT7300C1000 & VT7305C1000) On / Off N.C. actuators		
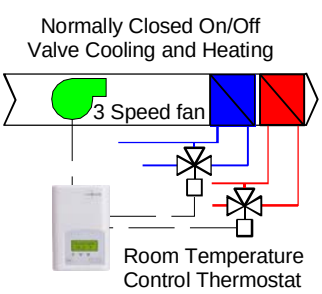	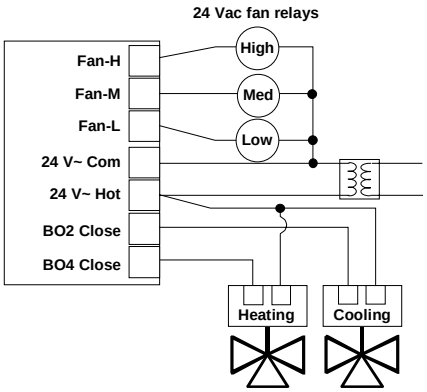	**Mandatory** • Pipe no = 4 pipes • CntrltTyp = On/Off • Fan Menu = 0 (L-M-H) • FL time = *as per actuator* • SeqOpera = 4 Cool/Heat
4 pipe system cooling and heating (VT7300C1000 & VT7305C1000) Floating actuators		
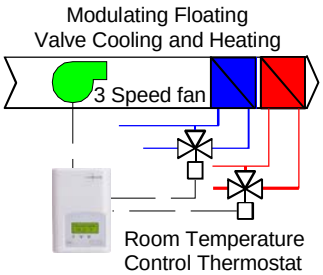	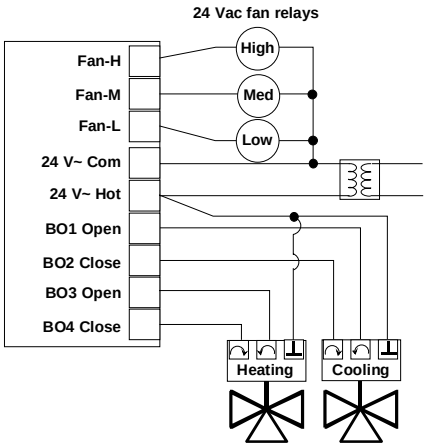	**Mandatory** • Pipe no = 4 pipes • CntrltTyp = Floating • Fan Menu = 0 (L-M-H) • FL time = *as per actuator* • SeqOpera = 4 Cool/Heat
4 pipe system cooling and heating (VT7300F1000 & VT7305F1000) Analog actuators		
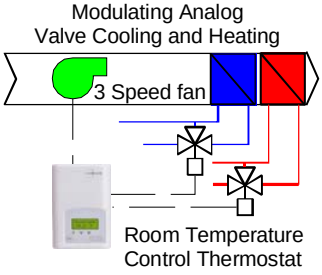	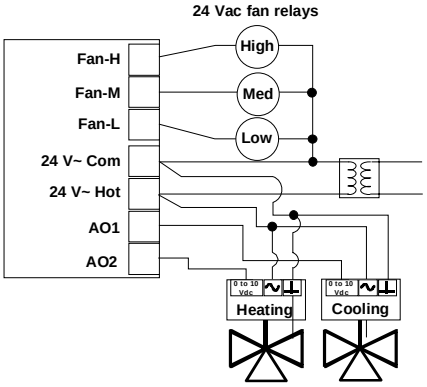	**Mandatory** • Pipe no = 4 pipes • Fan Menu = 0 (L-M-H) • RA/DA = *as per actuator* • SeqOpera = 4 Cool/Heat
2 pipe system cooling or heating with reheat (VT7300C1000 & VT7305C1000) Floating actuator		
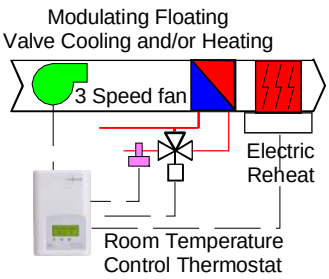	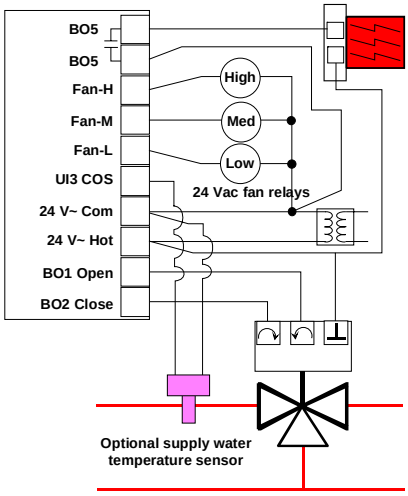	**Mandatory** • Pipe no = 2 pipes • CntrltTyp = Floating • Fan Menu = 0 (L-M-H) • FL time = *as per actuator* • SeqOpera = 2 Cool/Reheat • UI3 = COS

Remote sensor accessories

Model no.	Description
S3010W1000	Wall mounted temperature sensor
S3020W1000	Wall mounted temperature sensor with override button and occupancy status LED
S2060A1000	Averaging temperature sensor
S2000D1000	Duct mounted temperature sensor

FIG.8 – S3020W1000 WALL MOUNTED SENSOR

Remote mount temperature sensors use 10K type 2 NTC thermistors.

Features:

- Each sensor can be configured for various averaging combinations
- Optional occupancy led
- Optional override key

Wiring example of single remote room sensor:

VT7300 Series Thermostat

S3020W1000
Remote wiring 1 sensor
S2=On, S3=On

S3010W1000
Remote wiring 1 sensor
S2=On, S3=On

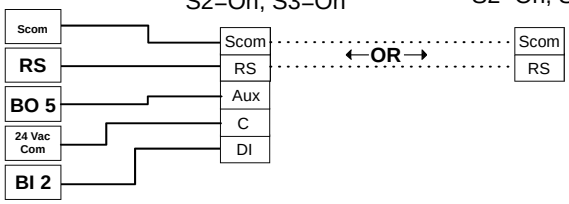

Dip switch setting for: **1 sensor**

S2-1 = ON
S2-2 = ON

Wiring examples of 2 remote room sensors for averaging applications:

VT7300 Series Thermostat

1 x S3010W1000 and 1 x S3020W1000
Remote wiring 2 sensors
S1=On, S2=Off

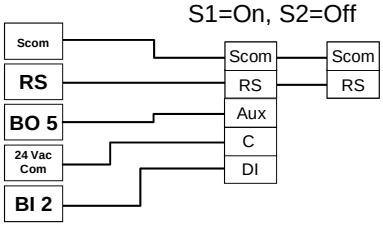

VT7300 Series Thermostat

2 x S3020W1000
Remote wiring 2 sensors
S2=On, S3=Off

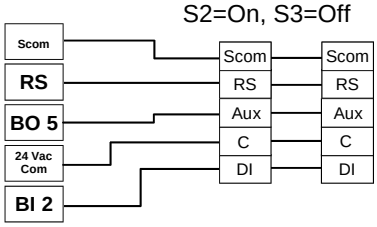

VT7300 Series Thermostat

2 x S3010W1000
Remote wiring 2 sensors
S2=On, S3=Off

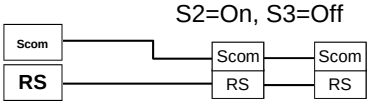

Notes for averaging applications:

- S3010W1000 and S3020W1000 can be mixed matched.
- S3010W1000 and S3020W1000 are to be wired in parallel.
- Respect the dip switch setting in each remote sensor.

Dip switch setting for: **2 sensors**

S2-1 = OFF
S2-2 = ON

Wiring examples of 3 remote room sensors for averaging applications:

VT7300 Series Thermostat

2x S3010W1000 and 1 x S3020W1000
Remote wiring 3 sensors
S2=Off, S3=Off

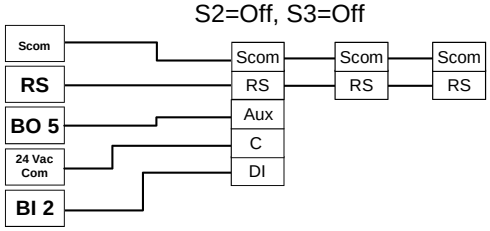

VT7300 Series Thermostat

3x S3010W1000
Remote wiring 3 sensors
S2=Off, S3=Off

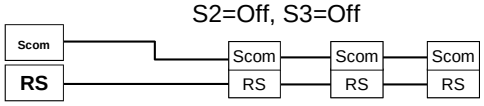

Dip switch setting for: **3 sensors**

S2-1 = OFF
S2-2 = OFF

Temperature vs resistance chart for 10 Kohm NTC thermistor ($R_{25°C}$ = 10KΩ±3%, $B_{25/85°C}$ = 3975K±1.5%)

°C	°F	Kohm	°C	°F	Kohm	°C	°F	Kohm	°C	°F	Kohm	°C	°F	Kohm
-40	-40	324.3197	-20	-4	94.5149	0	32	32.1910	20	68	12.4601	40	104	5.3467
-35	-31	234.4009	-15	5	71.2430	5	41	25.1119	25	77	10.0000	45	113	4.3881
-30	-22	171.3474	-10	14	54.1988	10	50	19.7390	30	86	8.0694	50	122	3.6202
-25	-13	126.6109	-5	23	41.5956	15	59	15.6286	35	95	6.5499	55	131	3.0016

Programming and status display instructions

Status display

The thermostat features a two-line, eight-character display. There is a low level back-light level that is always active and can only be seen at night.

When left unattended, the thermostat has an auto scrolling display that shows the actual status of the system. There is an option in the configuration menu to lockout the scrolling display and to only present the room temperature and conditional outdoor temperature to the user. With this option enabled, no local status is given of mode, schedule and relative humidity.

Each item is scrolled one by one with the back lighting off. Pressing any key will cause the back light to come on. When left unattended for 10 seconds after changes are made, the display will resume automatic status display scrolling.

To turn on the back light, press any key on the front panel. The back lit display will turn off when the thermostat is left unattended for 45 seconds

Sequence of auto-scroll status display:

Room & Humidity	System mode	Schedule status	Outdoor temperature	Alarms
x.x °C or °F XX % RH	Sys mode Auto	Occupied	Outdoor x.x °C or°F	Service
If humidity display enabled	Sys mode Cool	Unoccup	Network value only	Filter
RoomTemp x.x °C or °F	Sys mode heat	Override		Window
If humidity display is not enabled	Sys mode off			

% RH display is conditional to:
(Humidity display is model and configuration dependent)

- Model with RH sensor built in
- Display function be enabled with RH display parameter. Displayed range is 10 to 90 % RH

Outdoor air temperature

- Display is only enabled when outdoor air temperature network variable is received.

Schedule Status

- Occupied, Unoccupied and Override status are displayed on the scrolling display.

Alarms

- If alarms are detected, they will automatically be displayed at the end of the status display scroll.
- During an alarm message display, the back lit screen will light up at the same time as the message and shut off during the rest of the status display.
- Two alarms maximum can appear at any given time. The priority for the alarms is as follows:

Service	Indicates that there is a service alarm as per one of the programmable binary input (BI2)
Filter	Indicates that the filters are dirty as per one of the programmable binary input (BI2)
Window	Indicates that the outside window or door is opened and that the thermostat has cancelled any cooling or heating action (BI1)

Three status LED's on the thermostat cover are used to indicate the status of the fan (any speed), a call for heat, or a call for cooling.

Fan coil models

- When any of the fan speeds are ON, the FAN LED will illuminate.
- When heating & reheat is ON, the HEAT LED will illuminate.
- When cooling is ON, the COOL LED will illuminate.

Fig.11 – Hotel models °C/°F

Fig. 12 Commercial models with Override

Installer configuration parameter menu

Configuration can be done through the network or locally at the thermostat.

- To enter configuration, press and hold the middle button (°C/°F or Override) for 8 seconds
- Press the same middle button repetitively to scroll between all the available parameters
- Use the up and down key to change the parameter to the desired value.
- To acknowledge and save the new value, press the middle button again.
- The next listed parameter is now displayed

Configuration interface

Fan	Re-starts the configuration parameter list at the beginning
°C/°F Override	Enters the configuration mode. Press and hold for 8 seconds Pressing repetitively will scroll all available parameters one by one
Down	Adjust / rotate parameter value down
Up	Adjust / rotate parameter value up

User interface

- **Unoccupied mode Override**

An Override can be made on commercial models during an Unoccupied period. If the Override option is enabled in the lockout configuration pressing the middle override button will resume occupied setpoints for a time specified by parameter ToccTime

- **Keypad interface**

System	Is used to toggle between the different system mode available as per sequence and menu selected Pressing repetitively the button will toggle between all the available modes Available menus are dependent on selected sequence of operation
Fan	Is used to toggle between the different fan mode available as per sequence and menu selected Pressing repetitively the button will toggle between all the available modes Available menus are dependent on selected sequence of operation and menu selected for Fan
°C/°F Override	❖ Middle key is • °C / °F for Hotel models • Override for commercial models
Down	Adjust the setpoints down ❖ In cooling mode only the cooling setpoint displayed, ❖ In heating mode only the heating setpoint displayed ❖ In auto mode, (See below)
Up	Adjust the setpoints up ❖ In cooling mode only the cooling setpoint displayed, ❖ In heating mode only the heating setpoint displayed ❖ In auto mode, (See below)

1. Any setpoint change can be permanent or temporary based on configuration parameter (Setpoint Type)
2. Any setpoint written through the network, will be permanent and cancel any active temporary setpoints
3. Lockouts of access to certain functions is made with configuration parameter (lockout)

- **Occupied setpoint adjustments**

Cooling mode	**Heating mode**	**Off mode**	**Auto Mode** • Setpoint presented to user is the setpoint from the last action taken by the thermostat or the one currently in use. • If the other setpoint is the one desired, then the MODE button is used to toggle between the current displayed one and the other.
Cool XX.X °F or °C	**Heat XX.X °F or °C**	**No acces to setpoint**	**Cool XX.X °F or °C or Heat XX.X °F or °C** **Toggle to (Heat or Cool)with MODE button**

- Heat/Cool setpoint toggle with MODE button to be active only in AUTO mode.
- If cooling, heating or off mode is active, function is disabled

- **Unoccupied setpoints adjustments**

Setting the unoccupied setpoints is done through the network or through configuration setup only.

- **Mode button menu sequence.**
  - Modes presented to the user are dependent on sequence of operation selected
  - **Default mode** is in **bold** when sequence of operation parameter is changed
  - *Auto* mode menu can be disabled with (AutoMode) parameter

Sequence selected	Mode Menu
0 = Cooling only	Off - **Cool**
1 = Heating only	Off - **Heat**
2 = Cooling With Reheat	Off – *Auto* *– **Heat** – Cool
3 = Heating With Reheat	Off - **Heat**
4 = Cooling / Heating 4 pipes	Off – *Auto* *– **Heat** – Cool
5 = Cooling / Heating 4 pipes with Reheat	Off – *Auto* *– **Heat** – Cool

** Auto.* The Auto mode can be disabled from the menu with the (AutoMode) parameter

- **Available fan button menu sequences.**

Fan button menu configuration	Menu presented are dependent on model used and sequence of operation selected	Default value when sequence toggled
0 Low-Med-High	**3** Speed configuration using 3 fan relays (L-M-H)	High
1 Low-High	**2** Speed configuration using 2 fan relays (L-H)	High
2 Low-Med-High-Auto	**3** Speed configuration with **Auto** fan speed mode using 3 fan relays (L-M-H)	High
3 Low-High-Auto	**2** Speed configuration with **Auto** fan speed mode using 2 fan relays (L-H)	High
4 On-Auto	**Single** Speed configuration. Auto is for Fan on demand / On is On all the time	Auto

Auto speed fan mode is also offered in heating mode applications; it will not however have any effect on dehumidification. It will be strictly for noise comfort issues

Configuration parameters Default value	Significance and adjustments
Com Addr Thermostat networking address Default value = **4** **Range is:** 0 to 254	**Conditional parameter to BACnet MS-TP models (VT730xX1000B)** **Conditional parameter to Wireless models (VT730xX1000W)** This parameter will only appear when a BACnet or wireless network adapter is present. If the thermostat is installed as a stand-alone unit or with an Echelon adapter, this parameter will not be used or displayed • For BACnet MS-TP models valid range to use is from 1 to 127 • For wireless models valid range is 0 to 254 with a maximum of 40 thermostat per VGG
PAN ID Personal Area Network Identification Default value = 0 **Range is:** 0 to 500	**Conditional parameter to Wireless models (VT730xX1000W)** This parameter will only appear when a wireless network adapter is present. If the thermostat is installed as a stand-alone unit or with a BACnet or Echelon adapter, this parameter will not be used or displayed This parameter (Personal Area Network Identification) is used to link specific thermostats to a single specific Viconics wireless gateway (VWG) For every thermostat reporting to a gateway (maximum of 40 thermostats per gateway), be sure you set the ***SAME*** PAN ID value both at the gateway and the thermostat(s).
Channel Channel selection Default value = 10 **Range is:** 10 to 26	**Conditional parameter to Wireless models (VT73x0X1000W)** This parameter will only appear when a wireless network adapter is present. If the thermostat is installed as a stand-alone unit or with a BACnet or Echelon adapter, this parameter will not be used or displayed This parameter (Channel) is used to link specific thermostats to specific Viconics wireless gateway(s) (VWG) For every thermostat reporting to a gateway (maximum of 40 thermostats per gateway), be sure you set the ***SAME*** channel value both at the gateway and the thermostat(s). ***Viconics recommends using only the 2 last channels (25-2575MHz and 26-2580MHz)*** The default value of 10 is ***NOT*** a valid channel. The valid range of available channel is from 11 to 26

Get From Thermostat Get From another device configuration utility Default value = **0** **Range is:** 0 to 254	**Conditional parameter to Wireless models (VT730xX1000W)** This parameter will only appear when a wireless network adapter is present. If the thermostat is installed as a stand-alone unit or with a BACnet or Echelon adapter, this parameter will not be used or displayed This function is used when you want to copy all the configuration parameters automatically from another thermostat of the **SAME** model communicating on the **SAME** network. Configuration parameters copied from another device during this process are marked below with an **(*)**. The thermostat will begin querying the network 30 seconds after this parameter is given an address to query. If the device queried is not online yet, the thermostat will continue querying the specified device for its properties every 30 seconds until it comes on line and gets the requested information. If the specified address is unused and does not exist, the thermostat repeat its query every 30 seconds indefinitely. When the thermostat receives the configuration information, the query for configuration is disabled. The only way to re-enable the request for the configuration properties is by changing the actual address of the queried device to another value. The default value of 0 is ***NOT*** a valid address and disables this function. If the specified thermostat is of a different model, the query will be disabled automatically. The only way to re-enable the request for the configuration properties is by changing the actual address of the queried device to another value and to use a valid address used by a thermostat of the SAME model number.
BI1 * Binary input no.1 configuration **Default value =** None	**(None):** No function will be associated with the input **(Rem NSB):** remote NSB timer clock input. The scheduling will now be set as per the binary input. It provides low cost setback operation via a dry contact Contact opened = Occupied Contact closed = Unoccupied **(Motion NO)*:** remote NSB using a motion detector. The occupancy will now be set as per the binary input. Contact opened = Unoccupied. When the contact closes momentarily, the thermostat goes into occupied mode for the time specified by the ToccTime timer. The timer can reset at the end of its cycle if new movements are detected in the area. **(Motion NC)*:** remote NSB using a motion detector. The occupancy will now be set as per the binary input. Contact closed = Unoccupied. When the contact opens momentarily, the thermostat goes into occupied mode for the time specified by the ToccTime timer. The timer can reset at the end of its cycle if new movements are detected in the area. **(Window)** EMS: Forces the system to disable any current heating or cooling action by the thermostat. The mode stays the same and the current setpoints are the same Occupied setpoints. Only the outputs are disabled. There is a Door/Window alarm displayed on the thermostat to indicate to the local tenant that the door/window needs to be closed for cooling or heating to resume. * these settings will disable the local override function on the thermostat.

BI2 * Binary input no.2 configuration Default value = **None**	**(None)**: No function will be associated with the input **(Door Dry) Door contact & Motion detector:** This configuration is only functional if binary input #1 is set to **Motion NO** or **Motion NC**. BI1 is connected to a motion detector & BI2 is connected to a door contact switch. With this sequence enabled, the occupancy is now dictated through those 2 inputs. Any motion detected will set the zone to occupied status. The zone will remain permanently in occupied mode until the door contact switch opens momentarily. The thermostat will then go in unoccupied mode. If more movements are detected, the occupied mode will resume. If the door stays open more than the time value specified by the **doortime** parameter, the zone will remain unoccupied. **(RemOVR):** temporary occupancy remote override contact. This function disables the central button override function on the thermostat. The override function is now controlled by a manual remote momentarily closed contact. When configured in this mode, the input operates in a toggle mode. It is now possible to toggle between unoccupied & occupied setpoints for the amount of time set by parameter (TOccTime) temporary occupancy time. **(Filter):** a backlit flashing **Filter** alarm will be displayed on the thermostat LCD screen when the input is energized. It can be tied to a differential pressure switch that monitor filters Contact opened = No alarm Contact closed = Alarm displayed **(Service):** a backlit flashing **Service** alarm will be displayed on the thermostat LCD screen when the input is energized. It can be tied in to the AC unit control card, which provides an alarm in case of malfunction. Contact opened = No alarm Contact closed = Alarm displayed
UI3 * Universal input no.3 configuration Default value **= None**	**(None):** No function will be associated with the input **(COC/NH) Change over dry contact. Normally Heat:** Used for hot / cold water or air change over switching in 2 pipe systems. Contact closed = Cold water or air present Contact opened = Hot water or air present Only used and valid if system is setup as 2 pipes. Parameter (Pipe No) set as 2 pipes. **(COC/NC) Change over dry contact. Normally Cool:** Used for hot / cold water or air change over switching in 2 pipe systems. Contact closed = Hot water present Contact opened = Cold water present Only used and valid if system is setup as 2 pipes. Parameter (Pipe No) set as 2 pipes. **(COS) Change over analog sensor:** Used for hot / cold water or air change over switching in 2 pipe systems. Only used and valid if system is setup as 2 pipes. Parameter (Pipe No) set as 2 pipes. If water temperature is > 78 °F = Hot water present If water temperature is < 75 °F = Cold water present **(SS) Supply air sensor monitoring:** Used for supply air temperature monitoring. Only used for network reporting of the supply air temperature. Has no internal function in the thermostat.
MenuScro * **Menu scroll** Default value = **On =** Scroll active	Removes the scrolling display and only present the room temperature/humidity to the user. With this option enabled, no status is given of mode, schedule and outdoor temperature. **On = Scroll active** **Off = Scroll not active**

AutoMode * Enables **Auto** menu for Mode button Default value = **Off**	Enables Auto function for the mode button For sequences 2, 4 & 5 only **On = Auto active** (Off-Cool-Heat-Auto) **Off = auto not active** (Off-Cool-Heat)
C or F * Sets scale of the thermostat Default value = **°F**	**°F** for Fahrenheit scale **°C** for Celsius scale On hotel models, this sets the default value when the thermostat powers up
%RH disp * **Local %RH Display** Default value = **OFF** Models with Humidity sensor only **VT735xX10xx models only**	RH models only Enables the display of humidity below the room temperature on the display **ON** = Display %RH **OFF** = No display of %RH
Lockout Keypad lockout levels Default value = **0 No lock**	

Level	Occupied temperature setpoints	System mode setting	Fan mode setting	Unocupied Override
0	Yes access	Yes access	Yes access	Yes access
1	Yes access	Yes access	Yes access	No access
2	Yes access	No access	No access	Yes access
3	Yes access	No access	No access	No access
4	No access	No access	No access	Yes access
5	No access	No access	No access	No access

Pipe No * System type installation Number of pipes Default is: **4.0** Pipes	Defines the type of system installed **2.0** Pipes**,** will limit the number of sequences of operation available from 0 to 3 Will enable heat/cool operation from the same output (refer to wiring diagram) **4.0** Pipes, can access all the sequences of operation from 0 to 5 Will enable heat/cool operation from different output (refer to wiring diagram)
CntrlTyp * Control type for Triac models Default is: **Floating**	Defines the type of control output for the type of valves installed **VT7350C10xx, VT7300C10xx, VT7355C10xx and VT7305C10xx only** **On/Off** is for normally opened or normally closed 24 Vac 2 position valves **Floating** is for modulating 3 wires control of 24 Vac floating valves

SeqOpera Sequence of operation Default is: **Sequence #1**	**System = 2 Pipes**	**System = 4 Pipes**
0 = Cooling Only	Yes access	Yes access
1 = Heating only	Yes access	Yes access
2 = Cooling With Reheat	Yes access	Yes access
3 = Heating With Reheat	Yes access	Yes access
4 = Cooling / Heating 4 pipes	No access	Yes access
5 = Cooling / Heating 4 pipes with Reheat	No access	Yes access

	For single output applications, the system access is also limited if UI3 is configured for local changeover COS, COC/NC or COC/NC. The system mode available for the local configuration or network write is then limited by the current water temperature detected by the UI3.
Fan Menu * Mode button menu configuration Default is: **Menu #4**	Menu presented are dependent on model used and sequence of operation selected
0 = Low-Med-High	**3** Speed configuration using 3 fan relays (L-M-H)
1 = Low-High	**2** Speed configuration using 2 fan relays (L-H)
2 = Low-Med-High-Auto	**3** Speed configuration with Auto fan speed mode using 3 fan relays (L-M-H)
3 = Low-High-Auto	**2** Speed configuration with Auto fan speed mode using 2 fan relays (L-H)
4 = On-Auto	**Single** Speed configuration. Auto is for Fan on demand / On is On all the time

DHumiLCK Dehumidification network lockout Locks out dehumidification variable Default value: **On = Authorized**	Typically toggled through the network. This variable enables or disables dehumidification based on central network requirements from the BAS front end **On = Dehumidification Authorized** **Off = Dehumidification Not Authorized**
%RH set * **Dehumidification setpoint** Default is **50 % RH**	Used only if dehumidification sequence is enabled **30-95% RH**
DehuHyst * **Dehumidification hysterisys** Default is **5 % RH**	Humidity control hysterisys. Used only if dehumidification sequence is enabled. **2 to 20% RH**
DehuCool * **Maximum Dehumidification Cooling output** Default is **100 %**	Maximum cooling valve position when dehumidification is enabled. This can be used to balance smaller reheat loads installed in regards to the capacity of the cooling coil. Range is : **20 to 100 %**
Unocc HT Unoccupied heating setpoint Default value = **62 °F**	Heating setpoint range is: **40 to 90 °F (4.5 to 32.0 °C)**
Unocc CL Unoccupied cooling setpoint limit Default value = **80 °F**	Cooling setpoint range is: **54 to 100 °F (12.0 to 37.5 °C)**
heat max * Maximum heating setpoint limit Default value = **90 °F (32 °C)**	Maximum occupied & unoccupied heating setpoint adjustment. Heating setpoint range is: **40 to 90 °F (4.5 to 32.0 °C)**
cool min * Minimum cooling setpoint limit Default value = **54 °F (12 °C)**	Minimum occupied & unoccupied cooling setpoint adjustment. Cooling setpoint range is: **54 to 100 °F (12.0 to 37.5 °C)**
Set Type * Temporary setpoint enable Default is : **Permnent** Enables temporary setpoints feature to any change of occupied or unoccupied setpoint.	**Temporar**: (temporary) Local changes to the heating or cooling setpoints by the user are temporary. They will remain effective for the duration specified by ToccTime. Setpoints will revert back to their default value after internal timer ToccTime expires. To change setpoints permanently, revert to **No** this variable or write through the network. Any setpoints written through the network will be permanent ones and written to EEPROM. **Permnent**: (permanent) Any change of occupied or unoccupied setpoints through the keypad by the user are permanent and written to RAM & EEPROM
TOccTime * Temporary occupancy time Default value = **2 hours**	Temporary occupancy time with occupied mode setpoints when override function is enabled When the thermostat is in unoccupied mode, function is enabled with either the menu or UI2 configured as remote override input. **0,1, 2, 3, 4, 5, 6, 7, 8, 9, 10, & up to 24 hours**
DoorTime * Default value = **2 minutes**	Used only if BI1 is set to **Motion NO** or **NC** and BI2 is set to **Door Dry**. With this option enabled, the thermostat will stay in unoccupied mode when the door is open and remains open by a duration longer than set by this parameter. **1, 2, 3, 4, 5, 6, 7, 8, 9, 10 minutes**
deadband * Minimum deadband Default value = **2.0 °F (1.0 °C)**	Minimum deadband value between the heating and cooling setpoints. If modified, it will be applied only when any of the setpoints are modified. **2, 3, 4 or 5 °F, 1.0 °F increments (1.0 to 2.5 °C, 0.5 °C increments)**
cal RS Room temperature sensor calibration Default value = **0.0 °F or °C**	Offset that can be added/subtracted to actual displayed room temperature **± 5.0 °F, 1.0 °F increments (± 2.5 °C, 0.5 °C increments)**
cal RH Humidity sensor calibration Default value = **0 %RH**	Offset that can be added/subtracted to actual displayed humidity by ± 15.0 %RH. Range is : **± 15.0 %RH**

aux cont * Auxiliary contact function & configuration Default value = **0** Not Used	**0 Aux contact function not used or used for reheat** *IF SEQUENCE IS SET TO REHEAT THROUGH NETWORK OR LOCAL*, Ignore this parameter (Sequence 2, 3 or 5) **The output will directly follow the occupancy of the thermostat** 1 Auxiliary NO, Occupied = Contact Closed / Unoccupied = Contact Opened 2 Auxiliary NC, Occupied = Contact Opened / Unoccupied = Contact Closed **Output to follow directly main occupancy and Fan on command** Typically used for 2 position fresh air damper applications. 3 Auxiliary NO, Occupied & Fan On = Contact Closed / Unoccupied & Fan On or Off = Contact Opened 4 Auxiliary NC, Occupied & Fan On = Contact Opened / Unoccupied & Fan On or Off = Contact Closed **Output to follow secondary network occupancy command** 5 Auxiliary On/Off control through auxiliary network command. The output can be commanded through the network for any required auxiliary functions through a separate & dedicated network variable.
FL time * For floating models **VT73xxC10xx** only Default value: **1.5 minutes**	Floating actuator timing Maximum stroke time of floating valve actuator. 0.5 to 9.0 in 0.5 minutes increment
cph * On/Off devices cycles per hour For On/Off models & sequences Default value = **4 C.P.H.**	Will set the maximum number cycles per hour under normal control operation. It represents the maximum number of cycles that the equipment will turn ON and OFF in one hour. Note that a higher C.P.H will represent a higher accuracy of control at the expense of wearing mechanical components faster. **3, 4, 5, 6,7 & 8 C.P.H.**
RA/DA * For Analog models **VT73xxF10xx** only Default value: **DA signal**	Reverse acting or Direct acting signal for Analog output signals • **DA** = Direct acting 0 to 100 % = 0 to 10 Vdc • **RA** = Reverse acting 0 to 100 % = 10 to 0 Vdc
Reheat * Default value: **0 = 15 minute**	Sets the reheat output time base Valid only if reheat sequences are enabled **0=** 15 minutes **1=** 10 seconds for Solid state relays
UI3 dis Display UI3 value.	Used as diagnostic / service help to troubleshoot and diagnose sensor operation Supply or change over temperature when UI3 is configured as an analog input (SS or COS)

Specifications

Thermostat power requirements:	19-30 Vac 50 or 60 Hz; 2 VA Class 2
Operating conditions:	0 °C to 50 °C (32 °F to 122 °F) 0% to 95% R.H. non-condensing
Storage conditions:	-30 °C to 50 °C (-22 °F to 122 °F) 0% to 95% R.H. non-condensing
Sensor:	Local 10 K NTC thermistor
Resolution:	± 0.1 °C (± 0.2 °F)
Control accuracy:	± 0.5 ° C (± 0.9 °F) @ 21 °C (70 °F) typical calibrated
Occupied and unoccupied setpoint range cooling:	12.0 to 37.5 °C (54 to 100 °F)
Occupied and unoccupied setpoint range heating:	4.5 °C to 32 °C (40 °F to 90 °F)
Room and outdoor air temperature display range	-40 °C to 50 °C (-40 °F to 122 °F)
Proportional band for room temperature control:	Cooling & Heating: 1.8°C (3.2°F)
Binary inputs:	Dry contact across terminal BI1, BI2 & UI3 to Scom
Contact output rating:	Fan relay output: 30 Vac, 1 Amp. Maximum, 3 Amp. in-rush Valve triac output: 30 Vac, 1 Amp. Maximum, 3 Amp. in-rush Valve analog: 0 to 10 Vdc into 2KΩ resistance min.
Wire gauge	18 gauge maximum, 22 gauge recommended
Dimensions:	4.94” x 3.38” x 1.13”
Approximate shipping weight:	0.75 lb (0.34 kg)
Agency Approvals:	
UL	UL 873 (US) and CSA C22.2 No. 24 (Canada), File E27734 with CCN XAPX (US) and XAPX7 (Canada)
FCC	Compliant to CFR 47, Part 15, Subpart B, Class A (US)
Industry Canada	ICES-003 (Canada)
CE	EMC Directive 89/336/EEC (Europe Union)
C-Tick	AS/NZS CISPR 22 Compliant (Australia / New Zealand) Supplier Code Number N10696

Drawing & dimensions

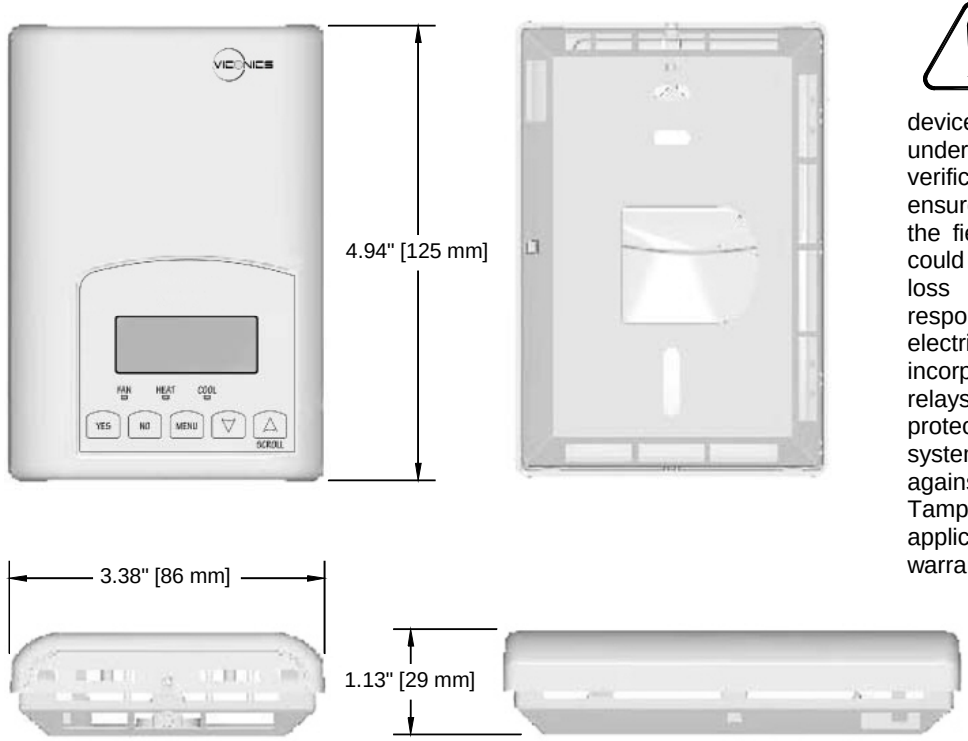

Fig.13 – Thermostat dimensions

Important notice

All VT7300 series controls are for use as operating controls only and are not safety devices. These instruments have undergone rigorous tests and verifications prior to shipment to ensure proper and reliable operation in the field. Whenever a control failure could lead to personal injury and/or loss of property, it becomes the responsibility of the user / installer / electrical system designer to incorporate safety devices (such as relays, flow switch, thermal protections, etc…) and/or alarm system to protect the entire system against such catastrophic failures. Tampering of the devices or miss application of the device will void warranty.

S1000/2000/3000
For Commercial HVAC Applications

Product overview

Viconics' latest generation S1000/2000/3000 series sensors have been especially developed for the VT7600 programmable and non-programmable thermostats as well as future Viconics thermostats. These robust sensors have provide accurate and stable temperature reading using a 10 Kohm thermistor element.

The S3000 series include all wall/room sensors, the S2000 series include all the duct/outdoor air models, and the S1000 include in duct change over sensing and submersible water sensing . Temperature averaging applications using only two or three S3000 sensors can easily be done by setting the dip switches to the appropriate position. It is to be noted that temperature averaging with the usual 4, 9, 16, 25, etc sensors can also be done, both with the S2000 and S3000 series. See table below for specific model numbers:

Models

Model:	Description:	Application:	Picture:
S1010E1000	Capsule type sensor for multi-purpose use, ¼" dia. capsule with 65 inch leads	• Remote sensing easy to dissimulate for indoor and outdoor use • Water temperature sensing strapped on pipe or in an immersion well	
S3010W1000	Room sensor	• Remote room sensing • 3 thermistors with 2 dip switches are provided with each sensor for various averaging combinations	
S3020W1000	Room sensor with temporary override key and occupancy LED	• Remote room sensing with override key and occupancy LED • 3 thermistors with 2 dip switches are provided with each sensor for various averaging combinations	
S2000D1000	Duct sensor with junction box	• Remote return air temperature sensing with the sensor mounted on the return air duct. • Outside air temperature sensing with the sensor installed in the fresh air plenum. • Supply air temperature sensor	
S2060A1000	Duct averaging sensor, with 6 ft sensor	• Remote averaging discharge air temperature sensing with the sensor mounted on the supply air duct. • Outside air temperature averaging sensing with the sensor installed in the fresh air plenum. • Mixed air temperature averaging sensor for economizer models with the sensor in	
S2020E1000	Outside air sensor, NEMA 4 enclosure	• Outside air temperature sensing with the sensor installed directly exposed to the elements. • Sensor uses a water resistant NEMA 4 PVC enclosure for outdoor applications	
S1010D1000	Duct Mounted Change Over Sensor	• Change Over Duct Sensing • Mounting: Through hole in duct, with eyelet	

028-0106

www.viconics.com
sales@viconics.com

Installation of room sensors (S3010W1000 and S3020W1000)

- Remove security screw on the bottom of sensor cover.
- Open up by pulling on the bottom side of sensor. (Fig.1)

Fig. 1

Location:

1- Should not be installed on an outside wall.
2- Must be installed away from any heat source.
3- Should not be installed near an air discharge grill.
4- Should not be affected by direct sun radiation.
5- Nothing must restrain vertical air circulation to the sensor.

Installation:

1. Remove security screw on the bottom of thermostat cover.
2. Open up by pulling on the bottom side of thermostat.
3. Pull out cables 6” out of the wall.
4. Wall surface must be flat and clean.
5. Insert cable in the central hole of the base.
6. Flip printed circuit board to access mounting hole
7. Align the base and mark the location of the two mounting holes on the wall. Install proper side of base up.
8. Install anchors in the wall.
9. Insert screws in mounting holes on each side of the base. DO NOT OVERTIGHTEN
10. Strip each wire 1/4 inch.
11. Insert each wire according to wiring diagram.
12. Gently push back into hole excess wring back into the wall.
13. Press back printed circuit board into place
14. Install the cover, top side
15. Install security screw.

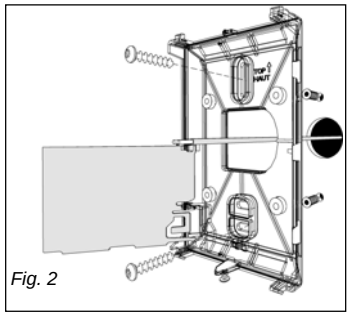

Fig. 2

Installation of duct sensors (S2000D1000) – (Fig.3)

1. Drill 1” [25mm] hole mid height on the side of the duct to insert the probe.
2. Loosen swivel screw and direct the probe so that the flat side of probe tip is facing the airflow.
3. Mark the position of the two holes to be drilled for mounting the sensor on the duct. Fasten the sensor to the duct with the two screws provided. Do not overtighten!
4. Junction box must be directed downwards or sideways.
5. For best results, locate sensor as far as you can from heating/cooling source.

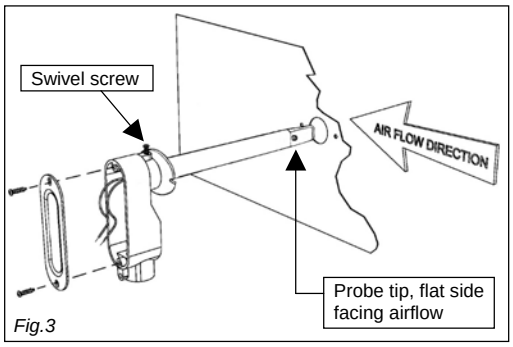

Fig.3

Installation of averaging sensor (S2060A1000) - (Fig.4)

1. Drill 5/8” [16 mm] hole for the element to pass into the duct.
2. Run the sensing element into the duct.
3. Remove the cover from the unit.
4. Mark the position of the holes to be drilled for mounting the case on the duct.
5. Fasten the sensor element in an “S” shaped pattern in order to cover the entire duct section area. Ensure that the probe does not touch the duct.
6. Firmly support the element in the duct using perforated steel strap and wire fastenings.
7. For best results, locate sensor as far as you can from heating/cooling source.

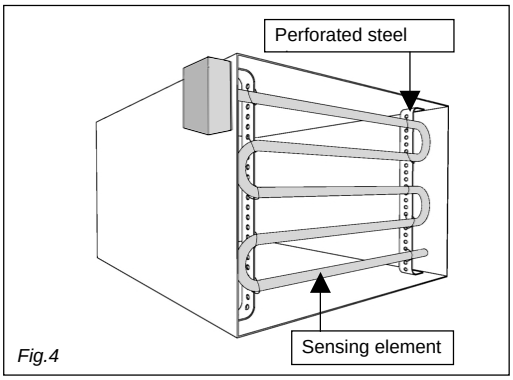

Fig.4

Installation of outside air sensor (S2020E1000) – (Fig.5)

1. Install sensor using mounting holes on each side.
2. Install on a vertical surface, respect mounting orientation
3. Remove the four screws and remove the cover.
4. Strip each wire 1/4 inch.
5. Insert each wire according to wiring diagram.
6. Install the cover with supplied screws.
7. In snowy area allow sufficient height for snow accumulation.

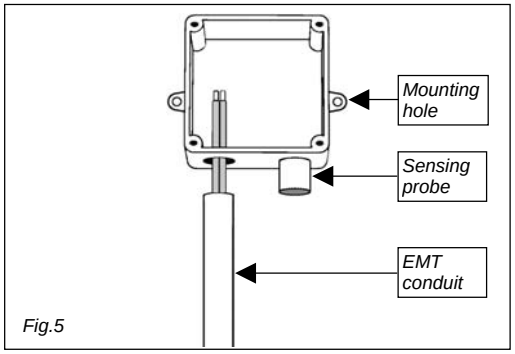

Fig.5

Wiring example of single remote room sensor:

VT7600 Series Thermostat

1x 3020W1000
Wiring 1 sensor
S2-1 = ON / S2-2 = ON

S3010W1000
Wiring 1 sensor
S2-1 = ON / S2-2 = ON

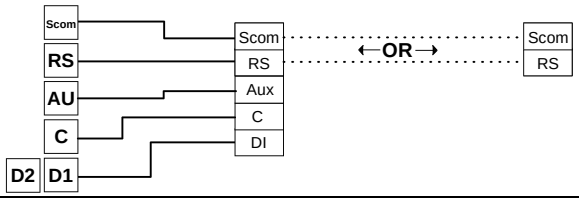

Dip switch setting for: **1 sensor**

S2-1 = ON
S2-2 = ON

Wiring examples of 2 remote room sensors for averaging applications:

VT7600 Series

2x S3020W1000
Wiring 2 sensors
S2-1 = OFF / S2-2 = ON

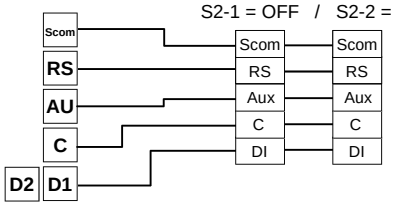

VT7600 Series

2x S3010W1000
Wiring 2 sensors
S2-1 = OFF / S2-2 = ON

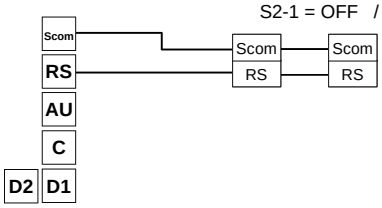

VT7600 Series

1x S3010W1000 and 1x S3020W1000
Wiring 2 sensors
S2-1 = OFF / S2-2 = ON

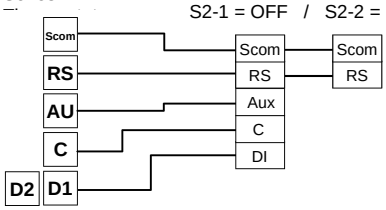

Notes for averaging applications:

- S3010W1000 and S3020W1000 can be mixed matched.
- S3010W1000 and S3020W1000 are to be wired in parallel.
- Respect the dip switch setting in each remote sensor.

Dip switch setting for: **2 sensors**

S2-1 = OFF
S2-2 = ON

Wiring examples of 3 remote room sensors for averaging applications:

VT7600 Series

2x S3010W1000 and 1x S3020W1000
Wiring 3 sensors
S2-1 = OFF / S2-2 = OFF

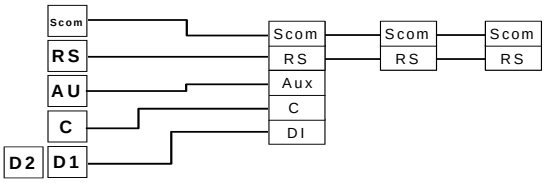

VT7600 Series Thermostat

1x S3010W1000 and 2x S3020W1000
Wiring 3 sensors
S2-1 = OFF / S2-2 = OFF

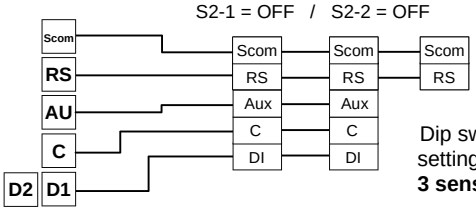

Dip switch setting for: **3 sensors**

S2-1 = OFF
S2-2 = OFF

Temperature vs resistance chart for 10 kOhm NTC thermistor

($R_{25°C}$ = 10KΩ±3% - $B_{25/85°C}$ = 3975K±1.5%)

ºC	ºF	kohms	ºC	ºF	kohms	ºC	ºF	kohms	ºC	ºF	kohms	ºC	ºF	kohms
-20	-4	94.5149	-10	14	54.1988	0	32	32.1910	10	50	19.7390	20	68	12.4601
-19	-2	89.2521	-9	16	51.3692	1	34	30.6120	11	52	18.8277	21	70	11.9177
-18	0	84.3147	-8	18	48.7042	2	36	29.1167	12	54	17.9636	22	72	11.4018
-17	1	79.6808	-7	19	46.1933	3	37	27.7088	13	55	17.1440	23	73	10.9112
-16	3	75.3299	-6	21	43.8268	4	39	26.3744	14	57	16.3665	24	75	10.4443
-15	5	71.2430	-5	23	41.5956	5	41	25.1119	15	59	15.6286	25	77	10.0000
-14	7	67.4028	-4	25	39.4912	6	43	23.9172	16	61	14.9280	26	79	9.5754
-13	9	63.7928	-3	27	37.5056	7	45	22.7861	17	63	14.2629	27	81	9.1711
-12	10	60.3980	-2	28	35.6316	8	46	21.7151	18	64	13.6310	28	82	8.7860
-11	12	57.2044	-1	30	33.8622	9	48	20.7004	19	66	13.0307	29	84	8.4190

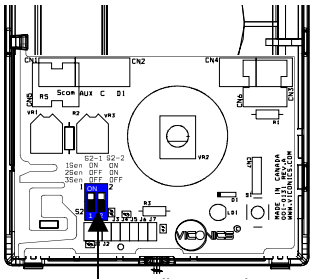

Fig.6

WIRING S2000D1000, S2060A1000 and S2020E1000

Remote wiring 1 sensor

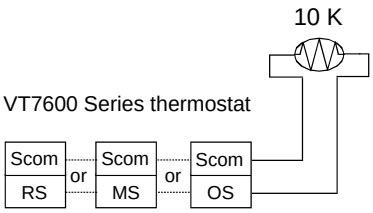

Remote wiring 4 sensors

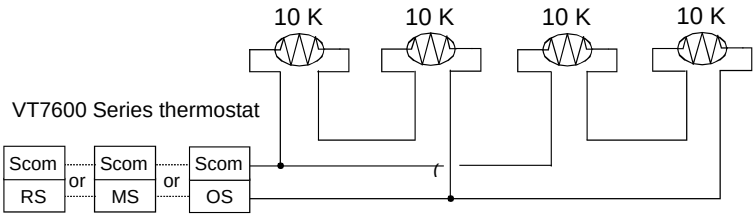

Specifications:

General for all sensors

Sensor type:	10 K ohm NTC thermistor
Maximum wire length:	5,000 feet [1,525 m] for 24 GA wire and up

Room sensors (S3010W1000 and S3020W1000)

Operating conditions:	0 °C to 50 °C (32 °F to 122 °F) 0% to 95% R.H. non-condensing
Storage conditions:	-30 °C to 50 °C (-22 °F to 122 °F) 0% to 95% R.H. non-condensing
Dimensions:	4.94” [125 mm] high 3.38” [86 mm] wide 1.13” [29 mm] thick
Approximate shipping weight:	0.34 LBS (155 grams)
Enclosure plastic type	ABS - FRI [WT1337V] UV stabilized

Duct sensor (S2000D1000)

Operating conditions:	-40 °C to 50 °C (-40 °F to 122 °F) 0% to 95% R.H. non-condensing
Storage conditions:	-40 °C to 70 °C (-40 °F to 122 °F) 0% to 95% R.H. non-condensing
Dimensions:	(refer to drawing Fig.8)
Approximate shipping weight:	0.7 LBS [0.3 Kg]
Probe tip plastic type:	Fire retarding grade "HB" ABS

Averaging sensor (S2060A1000)

Operating conditions:	-40 °C to 50 °C (-40 °F to 122 °F) 0% to 95% R.H. non-condensing
Storage conditions:	-40 °C to 70 °C (-40 °F to 158 °F) 0% to 95% R.H. non-condensing
Sensing element length	72 in [1,83 m]
Sensing element diameter / material:	3/16” [5 mm] / copper tube
Dimensions:	(refer to drawing Fig.9)
Approximate shipping weight:	1.6 LBS [0.7 Kg]

Outside air sensor (S2020E1000)

Operating and storage conditions:	-40 °C to 50 °C (-40 °F to 122 °F) 0% to 100% R.H.
Dimensions:	(refer to drawing Fig.10)
Approximate shipping weight:	1.1 LBS [0.5 Kg]
Enclosure plastic type:	NEMA 4 PVC

Duct Mounted Temperature Sensor (S1010D1000)

Operating conditions:	Up to 85ºC [185ºF]
Sensing Bulb Type:	Plastic Heatshrink
Dimensions:	(refer to drawing Fig.11)
Wire Length:	12” [305 mm]
Probe length / Diameter:	4-1/2” [114 mm]/ 1/4” [6 mm]

Fig.7

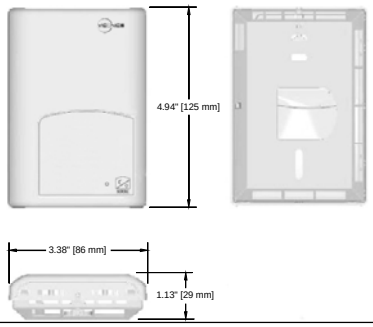

Fig.8

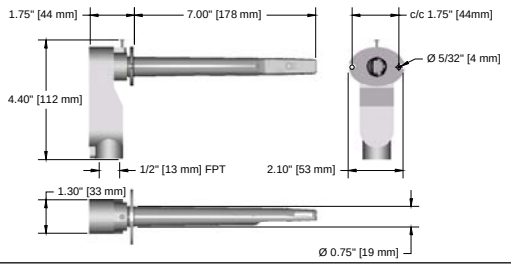

Fig.9

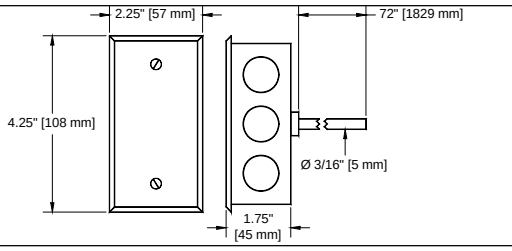

Fig. 10

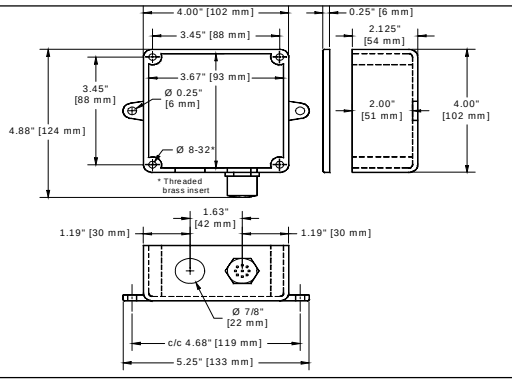

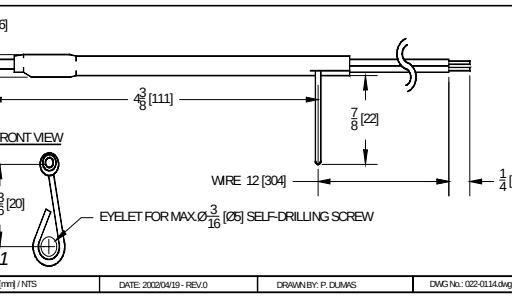

Fig. 11

Important notice

All S1000, S2000 and S3000 series sensors are for use as operating controls only and are not safety devices. These instruments have undergone rigorous tests and verifications prior to shipment to ensure proper and reliable operation in the field. Whenever a control failure could lead to personal injury and/or loss of property, it becomes the responsibility of the user / installer / electrical system designer to incorporate safety devices (such as relays, flow switch, thermal protections, etc…) and/or alarm system to protect the entire system against such catastrophic failures. Tampering of the devices or miss application of the device will void warranty.

APPENDIX C
LOAD ANALYSIS

JACOBS
1100 NORTH GLEBE ROAD, SUITE 500
ARLINGTON, VIRGINIA 22201

NRL BL222 FAN COIL RFP

Location	**WASHINGTON, DC**
Building owner	**DEPARTMENT OF THE NAVY**
Program user	
Company	
Comments	

By	**JACOBS ENGINEERING**
Dataset name	**C:\Users\traxledp\Documents\TRACE 700 Projects\NRL BL222.trc**

Calculation time	**02:39 PM on 08/06/2014**	
TRACE® 700 version	**6.3**	
Location	**Washington, D.C.**	
Latitude	**38.0**	**deg**
Longitude	**77.0**	**deg**
Time Zone	**5**	
Elevation	**14**	**ft**
Barometric pressure	**29.9**	**in. Hg**
Air density	**0.0760**	**lb/cu ft**
Air specific heat	**0.2444**	**Btu/lb·°F**
Density-specific heat product	**1.1147**	**Btu/h·cfm·°F**
Latent heat factor	**4,906.9**	**Btu·min/h·cu ft**
Enthalpy factor	**4.5604**	**lb·min/hr·cu ft**
Summer design dry bulb	**92**	**°F**
Summer design wet bulb	**76**	**°F**
Winter design dry bulb	**15**	**°F**
Summer clearness number	**0.85**	
Winter clearness number	**0.85**	
Summer ground reflectance	**0.20**	
Winter ground reflectance	**0.20**	
Carbon Dioxide Level	**400**	**ppm**
Design simulation period	**January - December**	
Cooling load methodology	**TETD-TA1**	
Heating load methodology	**UATD**	

Room Checksums

By JACOBS ENGINEERING

East Room - First Floor

COOLING COIL PEAK

Peaked at Time: Mo/Hr: 7 / 10
Outside Air: OADB/WB/HR: 83 / 73 / 106

	Space Sens. + Lat. Btu/h	Plenum Sens. + Lat Btu/h	Net Total Btu/h	Percent Of Total (%)
Envelope Loads				
Skylite Solar	0	0	0	0
Skylite Cond	0	0	0	0
Roof Cond	0	0	0	0
Glass Solar	9,473	0	9,473	82
Glass/Door Cond	289	0	289	3
Wall Cond	227	152	380	3
Partition/Door	0		0	0
Floor	0		0	0
Adjacent Floor	0	0	0	0
Infiltration	0		0	0
Sub Total ==>	9,990	152	10,142	88
Internal Loads				
Lights	437	109	546	5
People	504	0	504	4
Misc	273	0	273	2
Sub Total ==>	1,213	109	1,323	12
Ceiling Load	153	-153	0	0
Ventilation Load	0	0	0	0
Adj Air Trans Heat	0		0	0
Dehumid. Ov Sizing			0	0
Ov/Undr Sizing	0		0	0
Exhaust Heat		0	0	0
Sup. Fan Heat			30	0
Ret. Fan Heat		0	0	0
Duct Heat Pkup		0	0	0
Underflr Sup Ht Pkup			0	0
Supply Air Leakage		0	0	0
Grand Total ==>	11,356	109	11,495	100.00

CLG SPACE PEAK

Mo/Hr: 7 / 10
OADB: 83

	Space Sensible Btu/h	Percent Of Total (%)
Envelope Loads		
Skylite Solar	0	0
Skylite Cond	0	0
Roof Cond	0	0
Glass Solar	9,473	85
Glass/Door Cond	289	3
Wall Cond	227	2
Partition/Door	0	0
Floor	0	0
Adjacent Floor	0	0
Infiltration	0	0
Sub Total ==>	9,990	90
Internal Loads		
Lights	437	4
People	280	3
Misc	273	2
Sub Total ==>	990	9
Ceiling Load	153	1
Ventilation Load	0	0
Adj Air Trans Heat	0	0
Ov/Undr Sizing	0	0
Grand Total ==>	11,133	100.00

HEATING COIL PEAK

Mo/Hr: Heating Design
OADB: 15

	Space Peak Space Sens Btu/h	Coil Peak Tot Sens Btu/h	Percent Of Total (%)
Envelope Loads			
Skylite Solar	0	0	0.00
Skylite Cond	0	0	0.00
Roof Cond	0	0	0.00
Glass Solar	0	0	0.00
Glass/Door Cond	-4,977	-4,977	55.88
Wall Cond	-810	-1,354	15.20
Partition/Door	0	0	0.00
Floor	-580	-580	6.52
Adjacent Floor	0	0	0.00
Infiltration	0	0	0.00
Sub Total ==>	-6,367	-6,911	77.60
Internal Loads			
Lights	0	0	0.00
People	0	0	0.00
Misc	0	0	0.00
Sub Total ==>	0	0	0.00
Ceiling Load	-544	0	0.00
Ventilation Load	0	0	0.00
Adj Air Trans Heat	0	0	0
Ov/Undr Sizing	-4,778	-4,778	53.65
Exhaust Heat		0	0.00
OA Preheat Diff.		0	0.00
RA Preheat Diff.		2,783	-31.25
Additional Reheat		0	0.00
System Plenum Heat		0	0.00
Underflr Sup Ht Pkup		0	0.00
Supply Air Leakage		0	0.00
Grand Total ==>	-11,689	-8,906	100.00

TEMPERATURES

	Cooling	Heating
SADB	58.0	110.0
Ra Plenum	81.0	57.3
Return	78.0	68.0
Ret/OA	78.0	68.0
Fn MtrTD	0.0	0.0
Fn BldTD	0.0	0.0
Fn Frict	0.0	0.0

AIRFLOWS

	Cooling	Heating
Diffuser	499	250
Terminal	499	250
Main Fan	499	250
Sec Fan	0	0
Nom Vent	0	0
AHU Vent	0	0
Infil	0	0
MinStop/Rh	0	0
Return	499	250
Exhaust	0	0
Rm Exh	0	0
Auxiliary	0	0
Leakage Dwn	0	0
Leakage Ups	0	0

ENGINEERING CKS

	Cooling	Heating
% OA	0.0	0.0
cfm/ft²	3.12	1.56
cfm/ton	521.29	
ft²/ton	167.03	
Btu/hr·ft²	71.84	-73.06
No. People	1	

COOLING COIL SELECTION

	Total Capacity ton	Total Capacity MBh	Sens Cap. MBh	Coil Airflow cfm	Enter DB °F	Enter WB °F	Enter HR gr/lb	Leave DB °F	Leave WB °F	Leave HR gr/lb
Main Clg	1.0	11.5	11.3	499	78.1	61.8	56.7	58.0	53.9	55.6
Aux Clg	0.0	0.0	0.0	0	0.0	0.0	0.0	0.0	0.0	0.0
Opt Vent	0.0	0.0	0.0	0	0.0	0.0	0.0	0.0	0.0	0.0
Total	1.0	11.5								

AREAS

	Gross Total	Glass ft²	Glass (%)
Floor	160		
Part	0		
Int Door	0		
ExFlr	15		
Roof	0	0	0
Wall	160	90	56
Ext Door	0	0	0

HEATING COIL SELECTION

	Capacity MBh	Coil Airflow cfm	Ent °F	Lvg °F
Main Htg	-11.7	250	68.0	110.0
Aux Htg	0.0	0	0.0	0.0
Preheat	0.0	0	0.0	0.0
Humidif	0.0	0	0.0	0.0
Opt Vent	0.0	0	0.0	0.0
Total	-11.7			

Room Checksums

By JACOBS ENGINEERING

East Room - Second Floor

COOLING COIL PEAK

Peaked at Time: Mo/Hr: 7 / 11
Outside Air: OADB/WB/HR: 86 / 74 / 110

	Space Sens. + Lat. Btu/h	Plenum Sens. + Lat Btu/h	Net Total Btu/h	Percent Of Total (%)
Envelope Loads				
Skylite Solar	0	0	0	0
Skylite Cond	0	0	0	0
Roof Cond	0	325	325	3
Glass Solar	8,654	0	8,654	77
Glass/Door Cond	454	0	454	4
Wall Cond	323	161	484	4
Partition/Door	0		0	0
Floor	0		0	0
Adjacent Floor	0	0	0	0
Infiltration	0		0	0
Sub Total ==>	9,431	486	9,917	88
Internal Loads				
Lights	437	109	546	5
People	504	0	504	4
Misc	273	0	273	2
Sub Total ==>	1,213	109	1,323	12
Ceiling Load	438	-438	0	0
Ventilation Load	0	0	0	0
Adj Air Trans Heat	0		0	0
Dehumid. Ov Sizing			0	0
Ov/Undr Sizing	0		0	0
Exhaust Heat		0	0	0
Sup. Fan Heat			29	0
Ret. Fan Heat		0	0	0
Duct Heat Pkup		0	0	0
Underflr Sup Ht Pkup			0	0
Supply Air Leakage		0	0	0
Grand Total ==>	11,082	157	11,268	100.00

CLG SPACE PEAK

Mo/Hr: 7 / 11
OADB: 86

	Space Sensible Btu/h	Percent Of Total (%)
Envelope Loads		
Skylite Solar	0	0
Skylite Cond	0	0
Roof Cond	0	0
Glass Solar	8,654	80
Glass/Door Cond	454	4
Wall Cond	323	3
Partition/Door	0	0
Floor	0	0
Adjacent Floor	0	0
Infiltration	0	0
Sub Total ==>	9,431	87
Internal Loads		
Lights	437	4
People	280	3
Misc	273	3
Sub Total ==>	990	9
Ceiling Load	438	4
Ventilation Load	0	0
Adj Air Trans Heat	0	0
Ov/Undr Sizing	0	0
Grand Total ==>	10,859	100.00

HEATING COIL PEAK

Mo/Hr: Heating Design
OADB: 15

	Space Peak Space Sens Btu/h	Coil Peak Tot Sens Btu/h	Percent Of Total (%)
Envelope Loads			
Skylite Solar	0	0	0.00
Skylite Cond	0	0	0.00
Roof Cond	0	-939	10.81
Glass Solar	0	0	0.00
Glass/Door Cond	-4,977	-4,977	57.29
Wall Cond	-810	-1,164	13.40
Partition/Door	0	0	0.00
Floor	0	0	0.00
Adjacent Floor	0	0	0.00
Infiltration	0	0	0.00
Sub Total ==>	-5,787	-7,080	81.50
Internal Loads			
Lights	0	0	0.00
People	0	0	0.00
Misc	0	0	0.00
Sub Total ==>	0	0	0.00
Ceiling Load	-1,293	0	0.00
Ventilation Load	0	0	0.00
Adj Air Trans Heat	0	0	0
Ov/Undr Sizing	-4,322	-4,322	49.75
Exhaust Heat		0	0.00
OA Preheat Diff.		0	0.00
RA Preheat Diff.		2,715	-31.25
Additional Reheat		0	0.00
System Plenum Heat		0	0.00
Underflr Sup Ht Pkup		0	0.00
Supply Air Leakage		0	0.00
Grand Total ==>	-11,401	-8,687	100.00

TEMPERATURES

	Cooling	Heating
SADB	58.0	110.0
Ra Plenum	86.6	42.5
Return	78.0	68.0
Ret/OA	78.0	68.0
Fn MtrTD	0.0	0.0
Fn BldTD	0.0	0.0
Fn Frict	0.0	0.0

AIRFLOWS

	Cooling	Heating
Diffuser	487	244
Terminal	487	244
Main Fan	487	244
Sec Fan	0	0
Nom Vent	0	0
AHU Vent	0	0
Infil	0	0
MinStop/Rh	0	0
Return	487	244
Exhaust	0	0
Rm Exh	0	0
Auxiliary	0	0
Leakage Dwn	0	0
Leakage Ups	0	0

ENGINEERING CKS

	Cooling	Heating
% OA	0.0	0.0
cfm/ft²	3.04	1.52
cfm/ton	518.68	
ft²/ton	170.39	
Btu/hr·ft²	70.43	-71.26
No. People	1	

COOLING COIL SELECTION

	Total Capacity ton	Total Capacity MBh	Sens Cap. MBh	Coil Airflow cfm	Enter DB °F	Enter WB °F	Enter HR gr/lb	Leave DB °F	Leave WB °F	Leave HR gr/lb
Main Clg	0.9	11.3	11.0	487	78.1	61.8	56.7	58.0	53.9	55.5
Aux Clg	0.0	0.0	0.0	0	0.0	0.0	0.0	0.0	0.0	0.0
Opt Vent	0.0	0.0	0.0	0	0.0	0.0	0.0	0.0	0.0	0.0
Total	0.9	11.3								

AREAS

	Gross Total	Glass ft²	Glass (%)
Floor	160		
Part	0		
Int Door	0		
ExFlr	0		
Roof	160	0	0
Wall	160	90	56
Ext Door	0	0	0

HEATING COIL SELECTION

	Capacity MBh	Coil Airflow cfm	Ent °F	Lvg °F
Main Htg	-11.4	244	68.0	110.0
Aux Htg	0.0	0	0.0	0.0
Preheat	0.0	0	0.0	0.0
Humidif	0.0	0	0.0	0.0
Opt Vent	0.0	0	0.0	0.0
Total	-11.4			

Room Checksums

By JACOBS ENGINEERING

North Room - First Floor

COOLING COIL PEAK

Peaked at Time: Mo/Hr: 7 / 15
Outside Air: OADB/WB/HR: 92 / 76 / 110

	Space Sens. + Lat. Btu/h	Plenum Sens. + Lat Btu/h	Net Total Btu/h	Percent Of Total (%)
Envelope Loads				
Skylite Solar	0	0	0	0
Skylite Cond	0	0	0	0
Roof Cond	0	0	0	0
Glass Solar	1,914	0	1,914	40
Glass/Door Cond	1,169	0	1,169	25
Wall Cond	229	110	339	7
Partition/Door	0		0	0
Floor	0		0	0
Adjacent Floor	0	0	0	0
Infiltration	0		0	0
Sub Total ==>	3,312	110	3,421	72
Internal Loads				
Lights	437	109	546	11
People	504	0	504	11
Misc	273	0	273	6
Sub Total ==>	1,213	109	1,323	28
Ceiling Load	327	-327	0	0
Ventilation Load	0	0	0	0
Adj Air Trans Heat	0		0	0
Dehumid. Ov Sizing			0	0
Ov/Undr Sizing	0		0	0
Exhaust Heat		0	0	0
Sup. Fan Heat			12	0
Ret. Fan Heat		0	0	0
Duct Heat Pkup		0	0	0
Underflr Sup Ht Pkup			0	0
Supply Air Leakage		0	0	0
Grand Total ==>	4,852	-108	4,756	100.00

CLG SPACE PEAK

Mo/Hr: 7 / 15
OADB: 92

	Space Sensible Btu/h	Percent Of Total (%)
Envelope Loads		
Skylite Solar	0	0
Skylite Cond	0	0
Roof Cond	0	0
Glass Solar	1,914	41
Glass/Door Cond	1,169	25
Wall Cond	229	5
Partition/Door	0	0
Floor	0	0
Adjacent Floor	0	0
Infiltration	0	0
Sub Total ==>	3,312	72
Internal Loads		
Lights	437	9
People	280	6
Misc	273	6
Sub Total ==>	990	21
Ceiling Load	327	7
Ventilation Load	0	0
Adj Air Trans Heat	0	0
Ov/Undr Sizing	0	0
Grand Total ==>	4,628	100.00

HEATING COIL PEAK

Mo/Hr: Heating Design
OADB: 15

	Space Peak Space Sens Btu/h	Coil Peak Tot Sens Btu/h	Percent Of Total (%)
Envelope Loads			
Skylite Solar	0	0	0.00
Skylite Cond	0	0	0.00
Roof Cond	0	0	0.00
Glass Solar	0	0	0.00
Glass/Door Cond	-4,977	-4,977	116.24
Wall Cond	-810	-1,354	31.63
Partition/Door	0	0	0.00
Floor	-580	-580	13.56
Adjacent Floor	0	0	0.00
Infiltration	0	0	0.00
Sub Total ==>	-6,367	-6,911	161.43
Internal Loads			
Lights	0	0	0.00
People	0	0	0.00
Misc	0	0	0.00
Sub Total ==>	0	0	0.00
Ceiling Load	-544	0	0.00
Ventilation Load	0	0	0.00
Adj Air Trans Heat	0	0	0
Ov/Undr Sizing	1,473	1,473	-34.40
Exhaust Heat		0	0.00
OA Preheat Diff.		0	0.00
RA Preheat Diff.		1,157	-27.03
Additional Reheat		0	0.00
System Plenum Heat		0	0.00
Underflr Sup Ht Pkup		0	0.00
Supply Air Leakage		0	0.00
Grand Total ==>	-5,438	-4,281	100.00

TEMPERATURES

	Cooling	Heating
SADB	58.0	115.0
Ra Plenum	84.5	57.3
Return	78.0	68.0
Ret/OA	78.0	68.0
Fn MtrTD	0.0	0.0
Fn BldTD	0.0	0.0
Fn Frict	0.0	0.0

AIRFLOWS

	Cooling	Heating
Diffuser	208	104
Terminal	208	104
Main Fan	208	104
Sec Fan	0	0
Nom Vent	0	0
AHU Vent	0	0
Infil	0	0
MinStop/Rh	0	0
Return	208	104
Exhaust	0	0
Rm Exh	0	0
Auxiliary	0	0
Leakage Dwn	0	0
Leakage Ups	0	0

ENGINEERING CKS

	Cooling	Heating
% OA	0.0	0.0
cfm/ft²	1.30	0.65
cfm/ton	523.77	
ft²/ton	403.67	
Btu/hr·ft²	29.73	-33.99
No. People	1	

COOLING COIL SELECTION

	Total Capacity ton	Total Capacity MBh	Sens Cap. MBh	Coil Airflow cfm	Enter DB °F	Enter WB °F	Enter HR gr/lb	Leave DB °F	Leave WB °F	Leave HR gr/lb
Main Clg	0.4	4.8	4.5	208	78.1	62.4	59.5	58.0	54.7	58.6
Aux Clg	0.0	0.0	0.0	0	0.0	0.0	0.0	0.0	0.0	0.0
Opt Vent	0.0	0.0	0.0	0	0.0	0.0	0.0	0.0	0.0	0.0
Total	0.4	4.8								

AREAS

	Gross Total	Glass ft²	Glass (%)
Floor	160		
Part	0		
Int Door	0		
ExFlr	15		
Roof	0	0	0
Wall	160	90	56
Ext Door	0	0	0

HEATING COIL SELECTION

	Capacity MBh	Coil Airflow cfm	Ent °F	Lvg °F
Main Htg	-5.4	104	68.0	115.0
Aux Htg	0.0	0	0.0	0.0
Preheat	0.0	0	0.0	0.0
Humidif	0.0	0	0.0	0.0
Opt Vent	0.0	0	0.0	0.0
Total	-5.4			

Room Checksums

By JACOBS ENGINEERING

North Room - Second Floor

COOLING COIL PEAK

Peaked at Time: Mo/Hr: 7 / 16
Outside Air: OADB/WB/HR: 91 / 75 / 108

	Space Sens. + Lat. Btu/h	Plenum Sens. + Lat Btu/h	Net Total Btu/h	Percent Of Total (%)
Envelope Loads				
Skylite Solar	0	0	0	0
Skylite Cond	0	0	0	0
Roof Cond	0	1,452	1,452	25
Glass Solar	1,861	0	1,861	32
Glass/Door Cond	1,155	0	1,155	20
Wall Cond	252	-170	83	1
Partition/Door	0		0	0
Floor	0		0	0
Adjacent Floor	0	0	0	0
Infiltration	0		0	0
Sub Total ==>	3,268	1,283	4,551	77
Internal Loads				
Lights	437	109	546	9
People	504	0	504	9
Misc	273	0	273	5
Sub Total ==>	1,213	109	1,323	22
Ceiling Load	1,505	-1,505	0	0
Ventilation Load	0	0	0	0
Adj Air Trans Heat	0		0	0
Dehumid. Ov Sizing			0	0
Ov/Undr Sizing	0		0	0
Exhaust Heat		0	0	0
Sup. Fan Heat			15	0
Ret. Fan Heat		0	0	0
Duct Heat Pkup		0	0	0
Underflr Sup Ht Pkup			0	0
Supply Air Leakage		0	0	0
Grand Total ==>	5,986	-113	5,889	100.00

CLG SPACE PEAK

Mo/Hr: 7 / 16
OADB: 91

	Space Sensible Btu/h	Percent Of Total (%)
Envelope Loads		
Skylite Solar	0	0
Skylite Cond	0	0
Roof Cond	0	0
Glass Solar	1,861	32
Glass/Door Cond	1,155	20
Wall Cond	252	4
Partition/Door	0	0
Floor	0	0
Adjacent Floor	0	0
Infiltration	0	0
Sub Total ==>	3,268	57
Internal Loads		
Lights	437	8
People	280	5
Misc	273	5
Sub Total ==>	990	17
Ceiling Load	1,505	26
Ventilation Load	0	0
Adj Air Trans Heat	0	0
Ov/Undr Sizing	0	0
Grand Total ==>	5,762	100.00

HEATING COIL PEAK

Mo/Hr: Heating Design
OADB: 15

	Space Peak Space Sens Btu/h	Coil Peak Tot Sens Btu/h	Percent Of Total (%)
Envelope Loads			
Skylite Solar	0	0	0.00
Skylite Cond	0	0	0.00
Roof Cond	0	-939	17.62
Glass Solar	0	0	0.00
Glass/Door Cond	-4,977	-4,977	93.37
Wall Cond	-810	-1,164	21.84
Partition/Door	0	0	0.00
Floor	0	0	0.00
Adjacent Floor	0	0	0.00
Infiltration	0	0	0.00
Sub Total ==>	-5,787	-7,080	132.82
Internal Loads			
Lights	0	0	0.00
People	0	0	0.00
Misc	0	0	0.00
Sub Total ==>	0	0	0.00
Ceiling Load	-1,293	0	0.00
Ventilation Load	0	0	0.00
Adj Air Trans Heat	0	0	0
Ov/Undr Sizing	309	309	-5.80
Exhaust Heat		0	0.00
OA Preheat Diff.		0	0.00
RA Preheat Diff.		1,441	-27.03
Additional Reheat		0	0.00
System Plenum Heat		0	0.00
Underflr Sup Ht Pkup		0	0.00
Supply Air Leakage		0	0.00
Grand Total ==>	-6,771	-5,330	100.00

TEMPERATURES

	Cooling	Heating
SADB	58.0	115.0
Ra Plenum	107.7	42.5
Return	78.0	68.0
Ret/OA	78.0	68.0
Fn MtrTD	0.0	0.0
Fn BldTD	0.0	0.0
Fn Frict	0.0	0.0

AIRFLOWS

	Cooling	Heating
Diffuser	258	129
Terminal	258	129
Main Fan	258	129
Sec Fan	0	0
Nom Vent	0	0
AHU Vent	0	0
Infil	0	0
MinStop/Rh	0	0
Return	258	129
Exhaust	0	0
Rm Exh	0	0
Auxiliary	0	0
Leakage Dwn	0	0
Leakage Ups	0	0

ENGINEERING CKS

	Cooling	Heating
% OA	0.0	0.0
cfm/ft²	1.62	0.81
cfm/ton	526.70	
ft²/ton	326.04	
Btu/hr·ft²	36.80	-42.32
No. People	1	

COOLING COIL SELECTION

	Total Capacity ton	Total Capacity MBh	Sens Cap. MBh	Coil Airflow cfm	Enter DB °F	Enter WB °F	Enter HR gr/lb	Leave DB °F	Leave WB °F	Leave HR gr/lb
Main Clg	0.5	5.9	5.7	258	78.1	62.3	58.8	58.0	54.6	58.2
Aux Clg	0.0	0.0	0.0	0	0.0	0.0	0.0	0.0	0.0	0.0
Opt Vent	0.0	0.0	0.0	0	0.0	0.0	0.0	0.0	0.0	0.0
Total	0.5	5.9								

AREAS

	Gross Total	Glass ft²	Glass (%)
Floor	160		
Part	0		
Int Door	0		
ExFlr	0		
Roof	160	0	0
Wall	160	90	56
Ext Door	0	0	0

HEATING COIL SELECTION

	Capacity MBh	Coil Airflow cfm	Ent °F	Lvg °F
Main Htg	-6.8	129	68.0	115.0
Aux Htg	0.0	0	0.0	0.0
Preheat	0.0	0	0.0	0.0
Humidif	0.0	0	0.0	0.0
Opt Vent	0.0	0	0.0	0.0
Total	-6.8			

Room Checksums

By JACOBS ENGINEERING

South Room - First Floor

COOLING COIL PEAK

Peaked at Time: Mo/Hr: 11 / 14
Outside Air: OADB/WB/HR: 64 / 54 / 48

	Space Sens. + Lat. Btu/h	Plenum Sens. + Lat Btu/h	Net Total Btu/h	Percent Of Total (%)
Envelope Loads				
Skylite Solar	0	0	0	0
Skylite Cond	0	0	0	0
Roof Cond	0	0	0	0
Glass Solar	10,884	0	10,884	98
Glass/Door Cond	-1,317	0	-1,317	-12
Wall Cond	76	74	149	1
Partition/Door	0		0	0
Floor	0		0	0
Adjacent Floor	0	0	0	0
Infiltration	0		0	0
Sub Total ==>	9,643	74	9,716	88
Internal Loads				
Lights	437	109	546	5
People	504	0	504	5
Misc	273	0	273	2
Sub Total ==>	1,213	109	1,323	12
Ceiling Load	-40	40	0	0
Ventilation Load	0	0	0	0
Adj Air Trans Heat	0		0	0
Dehumid. Ov Sizing			0	0
Ov/Undr Sizing	0		0	0
Exhaust Heat		0	0	0
Sup. Fan Heat			28	0
Ret. Fan Heat		0	0	0
Duct Heat Pkup		0	0	0
Underflr Sup Ht Pkup			0	0
Supply Air Leakage		0	0	0
Grand Total ==>	10,816	223	11,067	100.00

CLG SPACE PEAK

Mo/Hr: 11 / 14
OADB: 64

	Space Sensible Btu/h	Percent Of Total (%)
Envelope Loads		
Skylite Solar	0	0
Skylite Cond	0	0
Roof Cond	0	0
Glass Solar	10,884	103
Glass/Door Cond	-1,317	-12
Wall Cond	76	1
Partition/Door	0	0
Floor	0	0
Adjacent Floor	0	0
Infiltration	0	0
Sub Total ==>	9,643	91
Internal Loads		
Lights	437	4
People	280	3
Misc	273	3
Sub Total ==>	990	9
Ceiling Load	-40	0
Ventilation Load	0	0
Adj Air Trans Heat	0	0
Ov/Undr Sizing	0	0
Grand Total ==>	10,592	100.00

HEATING COIL PEAK

Mo/Hr: Heating Design
OADB: 15

	Space Peak Space Sens Btu/h	Coil Peak Tot Sens Btu/h	Percent Of Total (%)
Envelope Loads			
Skylite Solar	0	0	0.00
Skylite Cond	0	0	0.00
Roof Cond	0	0	0.00
Glass Solar	0	0	0.00
Glass/Door Cond	-4,977	-4,977	58.73
Wall Cond	-810	-1,354	15.98
Partition/Door	0	0	0.00
Floor	-580	-580	6.85
Adjacent Floor	0	0	0.00
Infiltration	0	0	0.00
Sub Total ==>	-6,367	-6,911	81.56
Internal Loads			
Lights	0	0	0.00
People	0	0	0.00
Misc	0	0	0.00
Sub Total ==>	0	0	0.00
Ceiling Load	-544	0	0.00
Ventilation Load	0	0	0.00
Adj Air Trans Heat	0	0	0
Ov/Undr Sizing	-4,211	-4,211	49.69
Exhaust Heat		0	0.00
OA Preheat Diff.		0	0.00
RA Preheat Diff.		2,648	-31.25
Additional Reheat		0	0.00
System Plenum Heat		0	0.00
Underflr Sup Ht Pkup		0	0.00
Supply Air Leakage		0	0.00
Grand Total ==>	-11,122	-8,474	100.00

TEMPERATURES

	Cooling	Heating
SADB	58.0	110.0
Ra Plenum	77.2	57.3
Return	78.0	68.0
Ret/OA	78.0	68.0
Fn MtrTD	0.0	0.0
Fn BldTD	0.0	0.0
Fn Frict	0.0	0.0

AIRFLOWS

	Cooling	Heating
Diffuser	475	238
Terminal	475	238
Main Fan	475	238
Sec Fan	0	0
Nom Vent	0	0
AHU Vent	0	0
Infil	0	0
MinStop/Rh	0	0
Return	475	238
Exhaust	0	0
Rm Exh	0	0
Auxiliary	0	0
Leakage Dwn	0	0
Leakage Ups	0	0

ENGINEERING CKS

	Cooling	Heating
% OA	0.0	0.0
cfm/ft²	2.97	1.48
cfm/ton	515.15	
ft²/ton	173.49	
Btu/hr·ft²	69.17	-69.51
No. People	1	

COOLING COIL SELECTION

	Total Capacity ton	Total Capacity MBh	Sens Cap. MBh	Coil Airflow cfm	Enter DB °F	Enter WB °F	Enter HR gr/lb	Leave DB °F	Leave WB °F	Leave HR gr/lb
Main Clg	0.9	11.1	10.8	475	78.1	61.9	56.8	58.0	53.9	55.4
Aux Clg	0.0	0.0	0.0	0	0.0	0.0	0.0	0.0	0.0	0.0
Opt Vent	0.0	0.0	0.0	0	0.0	0.0	0.0	0.0	0.0	0.0
Total	0.9	11.1								

AREAS

	Gross Total	Glass ft²	Glass (%)
Floor	160		
Part	0		
Int Door	0		
ExFlr	15		
Roof	0	0	0
Wall	160	90	56
Ext Door	0	0	0

HEATING COIL SELECTION

	Capacity MBh	Coil Airflow cfm	Ent °F	Lvg °F
Main Htg	-11.1	238	68.0	110.0
Aux Htg	0.0	0	0.0	0.0
Preheat	0.0	0	0.0	0.0
Humidif	0.0	0	0.0	0.0
Opt Vent	0.0	0	0.0	0.0
Total	-11.1			

Room Checksums

By JACOBS ENGINEERING

South Room - Second Floor

COOLING COIL PEAK

Peaked at Time: Mo/Hr: 9 / 15
Outside Air: OADB/WB/HR: 84 / 69 / 83

	Space Sens. + Lat. Btu/h	Plenum Sens. + Lat Btu/h	Net Total Btu/h	Percent Of Total (%)
Envelope Loads				
Skylite Solar	0	0	0	0
Skylite Cond	0	0	0	0
Roof Cond	0	901	901	8
Glass Solar	8,091	0	8,091	72
Glass/Door Cond	452	0	452	4
Wall Cond	397	94	491	4
Partition/Door	0		0	0
Floor	0		0	0
Adjacent Floor	0	0	0	0
Infiltration	0		0	0
Sub Total ==>	8,939	996	9,935	88
Internal Loads				
Lights	437	109	546	5
People	504	0	504	4
Misc	273	0	273	2
Sub Total ==>	1,213	109	1,323	12
Ceiling Load	943	-943	0	0
Ventilation Load	0	0	0	0
Adj Air Trans Heat	0		0	0
Dehumid. Ov Sizing			0	0
Ov/Undr Sizing	0		0	0
Exhaust Heat		0	0	0
Sup. Fan Heat			29	0
Ret. Fan Heat		0	0	0
Duct Heat Pkup		0	0	0
Underflr Sup Ht Pkup			0	0
Supply Air Leakage		0	0	0
Grand Total ==>	11,096	162	11,287	100.00

CLG SPACE PEAK

Mo/Hr: 9 / 15
OADB: 84

	Space Sensible Btu/h	Percent Of Total (%)
Envelope Loads		
Skylite Solar	0	0
Skylite Cond	0	0
Roof Cond	0	0
Glass Solar	8,091	74
Glass/Door Cond	452	4
Wall Cond	397	4
Partition/Door	0	0
Floor	0	0
Adjacent Floor	0	0
Infiltration	0	0
Sub Total ==>	8,939	82
Internal Loads		
Lights	437	4
People	280	3
Misc	273	3
Sub Total ==>	990	9
Ceiling Load	943	9
Ventilation Load	0	0
Adj Air Trans Heat	0	0
Ov/Undr Sizing	0	0
Grand Total ==>	10,872	100.00

HEATING COIL PEAK

Mo/Hr: Heating Design
OADB: 15

	Space Peak Space Sens Btu/h	Coil Peak Tot Sens Btu/h	Percent Of Total (%)
Envelope Loads			
Skylite Solar	0	0	0.00
Skylite Cond	0	0	0.00
Roof Cond	0	-939	10.80
Glass Solar	0	0	0.00
Glass/Door Cond	-4,977	-4,977	57.22
Wall Cond	-810	-1,164	13.38
Partition/Door	0	0	0.00
Floor	0	0	0.00
Adjacent Floor	0	0	0.00
Infiltration	0	0	0.00
Sub Total ==>	-5,787	-7,080	81.40
Internal Loads			
Lights	0	0	0.00
People	0	0	0.00
Misc	0	0	0.00
Sub Total ==>	0	0	0.00
Ceiling Load	-1,293	0	0.00
Ventilation Load	0	0	0.00
Adj Air Trans Heat	0	0	0
Ov/Undr Sizing	-4,336	-4,336	49.85
Exhaust Heat		0	0.00
OA Preheat Diff.		0	0.00
RA Preheat Diff.		2,718	-31.25
Additional Reheat		0	0.00
System Plenum Heat		0	0.00
Underflr Sup Ht Pkup		0	0.00
Supply Air Leakage		0	0.00
Grand Total ==>	-11,416	-8,698	100.00

TEMPERATURES

	Cooling	Heating
SADB	58.0	110.0
Ra Plenum	96.6	42.5
Return	78.0	68.0
Ret/OA	78.0	68.0
Fn MtrTD	0.0	0.0
Fn BldTD	0.0	0.0
Fn Frict	0.0	0.0

AIRFLOWS

	Cooling	Heating
Diffuser	488	244
Terminal	488	244
Main Fan	488	244
Sec Fan	0	0
Nom Vent	0	0
AHU Vent	0	0
Infil	0	0
MinStop/Rh	0	0
Return	488	244
Exhaust	0	0
Rm Exh	0	0
Auxiliary	0	0
Leakage Dwn	0	0
Leakage Ups	0	0

ENGINEERING CKS

	Cooling	Heating
% OA	0.0	0.0
cfm/ft²	3.05	1.52
cfm/ton	518.48	
ft²/ton	170.11	
Btu/hr·ft²	70.54	-71.35
No. People	1	

COOLING COIL SELECTION

	Total Capacity ton	Total Capacity MBh	Sens Cap. MBh	Coil Airflow cfm	Enter DB °F	Enter WB °F	Enter HR gr/lb	Leave DB °F	Leave WB °F	Leave HR gr/lb
Main Clg	0.9	11.3	11.1	488	78.1	61.8	56.7	58.0	53.9	55.5
Aux Clg	0.0	0.0	0.0	0	0.0	0.0	0.0	0.0	0.0	0.0
Opt Vent	0.0	0.0	0.0	0	0.0	0.0	0.0	0.0	0.0	0.0
Total	0.9	11.3								

AREAS

	Gross Total	Glass ft²	Glass (%)
Floor	160		
Part	0		
Int Door	0		
ExFlr	0		
Roof	160	0	0
Wall	160	90	56
Ext Door	0	0	0

HEATING COIL SELECTION

	Capacity MBh	Coil Airflow cfm	Ent °F	Lvg °F
Main Htg	-11.4	244	68.0	110.0
Aux Htg	0.0	0	0.0	0.0
Preheat	0.0	0	0.0	0.0
Humidif	0.0	0	0.0	0.0
Opt Vent	0.0	0	0.0	0.0
Total	-11.4			

Room Checksums

By JACOBS ENGINEERING

West Room - First Floor

COOLING COIL PEAK

Peaked at Time: Mo/Hr: 7 / 18
Outside Air: OADB/WB/HR: 88 / 74 / 104

	Space Sens. + Lat. Btu/h	Plenum Sens. + Lat Btu/h	Net Total Btu/h	Percent Of Total (%)
Envelope Loads				
Skylite Solar	0	0	0	0
Skylite Cond	0	0	0	0
Roof Cond	0	0	0	0
Glass Solar	9,498	0	9,498	75
Glass/Door Cond	989	0	989	8
Wall Cond	539	352	891	7
Partition/Door	0		0	0
Floor	0		0	0
Adjacent Floor	0	0	0	0
Infiltration	0		0	0
Sub Total ==>	11,026	352	11,378	89
Internal Loads				
Lights	437	109	546	4
People	504	0	504	4
Misc	273	0	273	2
Sub Total ==>	1,213	109	1,323	10
Ceiling Load	404	-404	0	0
Ventilation Load	0	0	0	0
Adj Air Trans Heat	0		0	0
Dehumid. Ov Sizing			0	0
Ov/Undr Sizing	0		0	0
Exhaust Heat		0	0	0
Sup. Fan Heat			29	0
Ret. Fan Heat		0	0	0
Duct Heat Pkup		0	0	0
Underflr Sup Ht Pkup			0	0
Supply Air Leakage		0	0	0
Grand Total ==>	12,644	57	12,729	100.00

CLG SPACE PEAK

Mo/Hr: 7 / 18
OADB: 88

	Space Sensible Btu/h	Percent Of Total (%)
Envelope Loads		
Skylite Solar	0	0
Skylite Cond	0	0
Roof Cond	0	0
Glass Solar	9,498	76
Glass/Door Cond	989	8
Wall Cond	539	4
Partition/Door	0	0
Floor	0	0
Adjacent Floor	0	0
Infiltration	0	0
Sub Total ==>	11,026	89
Internal Loads		
Lights	437	4
People	280	2
Misc	273	2
Sub Total ==>	990	8
Ceiling Load	404	3
Ventilation Load	0	0
Adj Air Trans Heat	0	0
Ov/Undr Sizing	0	0
Grand Total ==>	12,420	100.00

HEATING COIL PEAK

Mo/Hr: Heating Design
OADB: 15

	Space Peak Space Sens Btu/h	Coil Peak Tot Sens Btu/h	Percent Of Total (%)
Envelope Loads			
Skylite Solar	0	0	0.00
Skylite Cond	0	0	0.00
Roof Cond	0	0	0.00
Glass Solar	0	0	0.00
Glass/Door Cond	-4,977	-4,977	63.55
Wall Cond	-810	-1,354	17.29
Partition/Door	0	0	0.00
Floor	-580	-580	7.41
Adjacent Floor	0	0	0.00
Infiltration	0	0	0.00
Sub Total ==>	-6,367	-6,911	88.26
Internal Loads			
Lights	0	0	0.00
People	0	0	0.00
Misc	0	0	0.00
Sub Total ==>	0	0	0.00
Ceiling Load	-544	0	0.00
Ventilation Load	0	0	0.00
Adj Air Trans Heat	0	0	0
Ov/Undr Sizing	-4,430	-4,430	56.57
Exhaust Heat		0	0.00
OA Preheat Diff.		0	0.00
RA Preheat Diff.		3,510	-44.82
Additional Reheat		0	0.00
System Plenum Heat		0	0.00
Underflr Sup Ht Pkup		0	0.00
Supply Air Leakage		0	0.00
Grand Total ==>	-11,341	-7,831	100.00

TEMPERATURES

	Cooling	Heating
SADB	55.0	110.0
Ra Plenum	86.0	57.3
Return	78.0	68.0
Ret/OA	78.0	68.0
Fn MtrTD	0.0	0.0
Fn BldTD	0.0	0.0
Fn Frict	0.0	0.0

AIRFLOWS

	Cooling	Heating
Diffuser	484	242
Terminal	484	242
Main Fan	484	242
Sec Fan	0	0
Nom Vent	0	0
AHU Vent	0	0
Infil	0	0
MinStop/Rh	0	0
Return	484	242
Exhaust	0	0
Rm Exh	0	0
Auxiliary	0	0
Leakage Dwn	0	0
Leakage Ups	0	0

ENGINEERING CKS

	Cooling	Heating
% OA	0.0	0.0
cfm/ft²	3.03	1.51
cfm/ton	456.69	
ft²/ton	150.83	
Btu/hr·ft²	79.56	-70.88
No. People	1	

COOLING COIL SELECTION

	Total Capacity ton	Total Capacity MBh	Sens Cap. MBh	Coil Airflow cfm	Enter DB °F	Enter WB °F	Enter HR gr/lb	Leave DB °F	Leave WB °F	Leave HR gr/lb
Main Clg	1.1	12.7	12.5	484	78.1	60.5	50.8	55.0	51.1	49.8
Aux Clg	0.0	0.0	0.0	0	0.0	0.0	0.0	0.0	0.0	0.0
Opt Vent	0.0	0.0	0.0	0	0.0	0.0	0.0	0.0	0.0	0.0
Total	1.1	12.7								

AREAS

	Gross Total	Glass ft²	Glass (%)
Floor	160		
Part	0		
Int Door	0		
ExFlr	15		
Roof	0	0	0
Wall	160	90	56
Ext Door	0	0	0

HEATING COIL SELECTION

	Capacity MBh	Coil Airflow cfm	Ent °F	Lvg °F
Main Htg	-11.3	242	68.0	110.0
Aux Htg	0.0	0	0.0	0.0
Preheat	0.0	0	0.0	0.0
Humidif	0.0	0	0.0	0.0
Opt Vent	0.0	0	0.0	0.0
Total	-11.3			

Room Checksums

By JACOBS ENGINEERING

West Room - Second Floor

COOLING COIL PEAK

Peaked at Time: Mo/Hr: 7 / 18
Outside Air: OADB/WB/HR: 88 / 74 / 104

	Space Sens. + Lat. Btu/h	Plenum Sens. + Lat Btu/h	Net Total Btu/h	Percent Of Total (%)
Envelope Loads				
Skylite Solar	0	0	0	0
Skylite Cond	0	0	0	0
Roof Cond	0	1,444	1,444	11
Glass Solar	9,032	0	9,032	67
Glass/Door Cond	1,014	0	1,014	8
Wall Cond	506	33	539	4
Partition/Door	0		0	0
Floor	0		0	0
Adjacent Floor	0	0	0	0
Infiltration	0		0	0
Sub Total ==>	10,552	1,477	12,030	90
Internal Loads				
Lights	437	109	546	4
People	504	0	504	4
Misc	273	0	273	2
Sub Total ==>	1,213	109	1,323	10
Ceiling Load	1,548	-1,548	0	0
Ventilation Load	0	0	0	0
Adj Air Trans Heat	0		0	0
Dehumid. Ov Sizing			0	0
Ov/Undr Sizing	0		0	0
Exhaust Heat		0	0	0
Sup. Fan Heat			30	0
Ret. Fan Heat		0	0	0
Duct Heat Pkup		0	0	0
Underflr Sup Ht Pkup			0	0
Supply Air Leakage		0	0	0
Grand Total ==>	13,314	38	13,382	100.00

CLG SPACE PEAK

Mo/Hr: 7 / 18
OADB: 88

	Space Sensible Btu/h	Percent Of Total (%)
Envelope Loads		
Skylite Solar	0	0
Skylite Cond	0	0
Roof Cond	0	0
Glass Solar	9,032	69
Glass/Door Cond	1,014	8
Wall Cond	506	4
Partition/Door	0	0
Floor	0	0
Adjacent Floor	0	0
Infiltration	0	0
Sub Total ==>	10,552	81
Internal Loads		
Lights	437	3
People	280	2
Misc	273	2
Sub Total ==>	990	8
Ceiling Load	1,548	12
Ventilation Load	0	0
Adj Air Trans Heat	0	0
Ov/Undr Sizing	0	0
Grand Total ==>	13,090	100.00

HEATING COIL PEAK

Mo/Hr: Heating Design
OADB: 15

	Space Peak Space Sens Btu/h	Coil Peak Tot Sens Btu/h	Percent Of Total (%)
Envelope Loads			
Skylite Solar	0	0	0.00
Skylite Cond	0	0	0.00
Roof Cond	0	-939	11.38
Glass Solar	0	0	0.00
Glass/Door Cond	-4,977	-4,977	60.30
Wall Cond	-810	-1,164	14.10
Partition/Door	0	0	0.00
Floor	0	0	0.00
Adjacent Floor	0	0	0.00
Infiltration	0	0	0.00
Sub Total ==>	-5,787	-7,080	85.79
Internal Loads			
Lights	0	0	0.00
People	0	0	0.00
Misc	0	0	0.00
Sub Total ==>	0	0	0.00
Ceiling Load	-1,293	0	0.00
Ventilation Load	0	0	0.00
Adj Air Trans Heat	0	0	0
Ov/Undr Sizing	-4,872	-4,872	59.04
Exhaust Heat		0	0.00
OA Preheat Diff.		0	0.00
RA Preheat Diff.		3,699	-44.82
Additional Reheat		0	0.00
System Plenum Heat		0	0.00
Underflr Sup Ht Pkup		0	0.00
Supply Air Leakage		0	0.00
Grand Total ==>	-11,952	-8,253	100.00

TEMPERATURES

	Cooling	Heating
SADB	55.0	110.0
Ra Plenum	108.5	42.5
Return	78.0	68.0
Ret/OA	78.0	68.0
Fn MtrTD	0.0	0.0
Fn BldTD	0.0	0.0
Fn Frict	0.0	0.0

AIRFLOWS

	Cooling	Heating
Diffuser	511	255
Terminal	511	255
Main Fan	511	255
Sec Fan	0	0
Nom Vent	0	0
AHU Vent	0	0
Infil	0	0
MinStop/Rh	0	0
Return	511	255
Exhaust	0	0
Rm Exh	0	0
Auxiliary	0	0
Leakage Dwn	0	0
Leakage Ups	0	0

ENGINEERING CKS

	Cooling	Heating
% OA	0.0	0.0
cfm/ft²	3.19	1.60
cfm/ton	457.83	
ft²/ton	143.47	
Btu/hr·ft²	83.64	-74.70
No. People	1	

COOLING COIL SELECTION

	Total Capacity ton	Total Capacity MBh	Sens Cap. MBh	Coil Airflow cfm	Enter DB/WB/HR °F	°F	gr/lb	Leave DB/WB/HR °F	°F	gr/lb
Main Clg	1.1	13.4	13.2	511	78.1	60.5	50.7	55.0	51.1	49.7
Aux Clg	0.0	0.0	0.0	0	0.0	0.0	0.0	0.0	0.0	0.0
Opt Vent	0.0	0.0	0.0	0	0.0	0.0	0.0	0.0	0.0	0.0
Total	1.1	13.4								

AREAS

	Gross Total	Glass ft²	Glass (%)
Floor	160		
Part	0		
Int Door	0		
ExFlr	0		
Roof	160	0	0
Wall	160	90	56
Ext Door	0	0	0

HEATING COIL SELECTION

	Capacity MBh	Coil Airflow cfm	Ent °F	Lvg °F
Main Htg	-12.0	255	68.0	110.0
Aux Htg	0.0	0	0.0	0.0
Preheat	0.0	0	0.0	0.0
Humidif	0.0	0	0.0	0.0
Opt Vent	0.0	0	0.0	0.0
Total	-12.0			