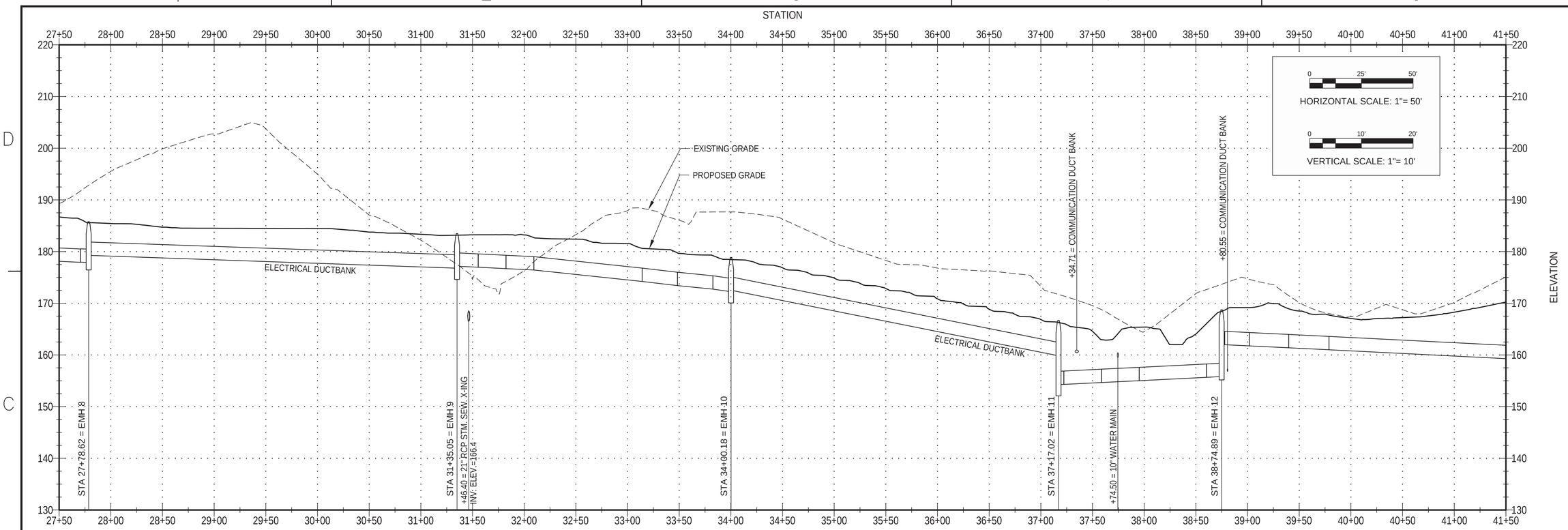

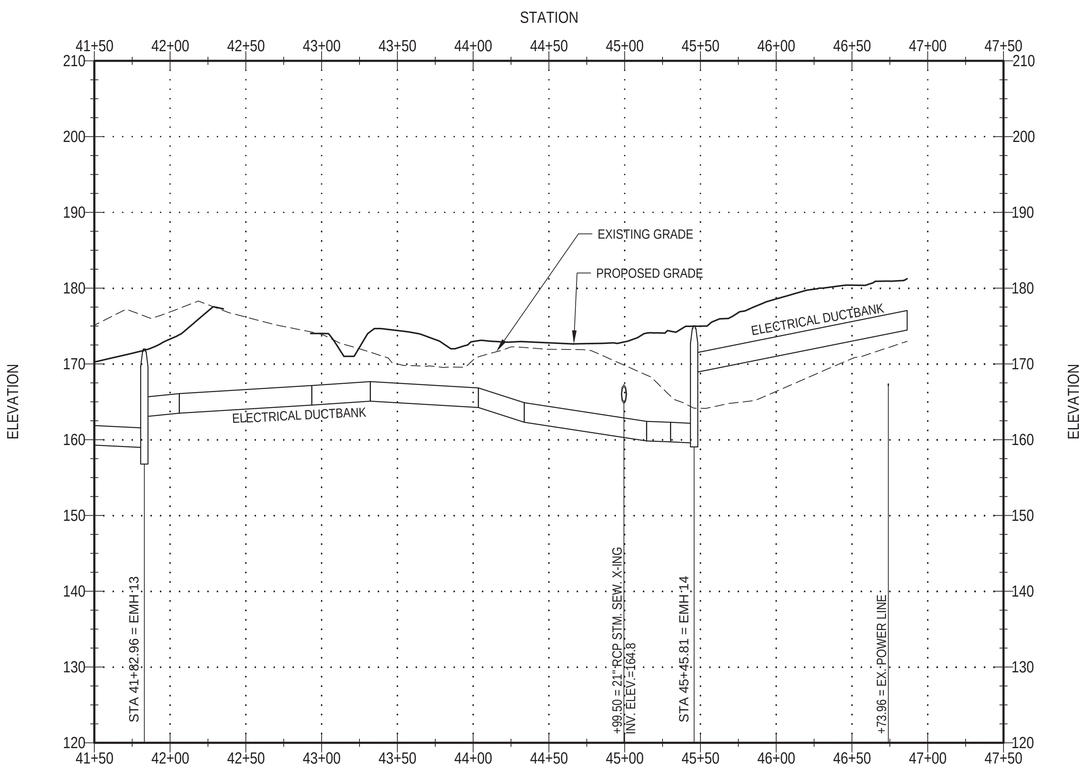

HORIZONTAL SCALE: 1"= 50'

VERTICAL SCALE: 1"= 10'

NOTES:

1. DEPTH OF EXISTING WATER LINES ARE SHOWN AT ASSUMED DEPTH OF 42 INCHES BELOW EXISTING GRADE. CONTRACTOR SHALL BE RESPONSIBLE FOR FIELD VERIFYING DEPTH PRIOR TO START OF CONSTRUCTION.
2. DEPTH OF EXISTING ELECTRICAL AND TELECOMMUNICATIONS LINES ARE SHOWN AT ASSUMED DEPTH OF 30 INCHES BELOW EXISTING GRADE. CONTRACTOR SHALL BE RESPONSIBLE FOR FIELD VERIFYING DEPTH PRIOR TO START OF CONSTRUCTION.

SYM	DESCRIPTION	DATE	APPR

NAVFAC

COMMONWEALTH OF VIRGINIA
06/10/2015
BRADFORD D. WEINERT
No. 022244
PROFESSIONAL ENGINEER
SEAL

JACOBS
1100 NORTH GLEBE ROAD SUITE 500
ARLINGTON, VIRGINIA 22201
TEL (571) 218-1000 FAX (571) 218-1600
A/E INFO

APPROVED
FOR COMMANDER NAVFAC 15 May 2015

ACTIVITY
SATISFACTORY TO DATE 15 May 2015

DES	DRW	CHK
HR	HR	RC

<<PM/DM>>
BRANCH MANAGER MS
CHIEF ENG/ARCH THC
FIRE PROTECTION KTD

DEPARTMENT OF THE NAVY
NAVAL FACILITIES ENGINEERING COMMAND
NAVAL FACILITIES ENGINEERING COMMAND
MARINE CORPS BASE – QUANTICO
QUANTICO, VA

P-635 ASP EXPANSION

SITE UTILITY PROFILES

SCALE: AS NOTED
EPROJECT NO.: 1312142
CONSTR. CONTR. NO.
NAVFAC DRAWING NO. 13072300
SHEET 84 OF 201

CU-207

DRAWFORM REVISION: 10 MARCH 2009

FILE NAME: C:\pwworking\ghos\crowlerc\d0751223\NAVFAC_P635CU-207.dwg LAYOUT NAME: CU-207 PLOTTED: Wednesday, June 10, 2015 - 4:49pm USER: crowlerc

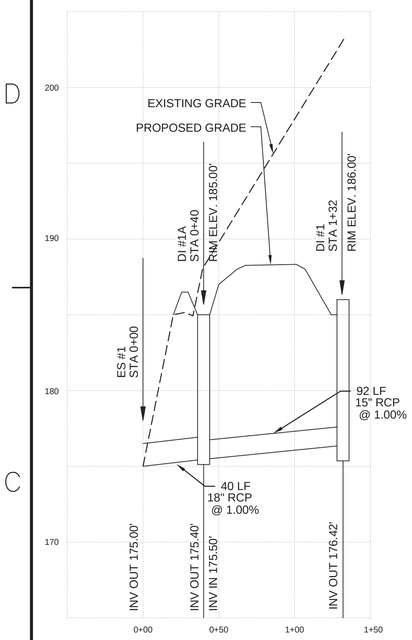

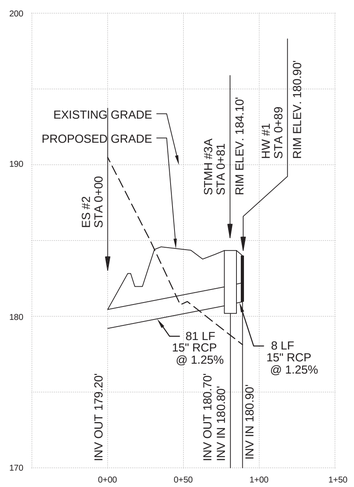

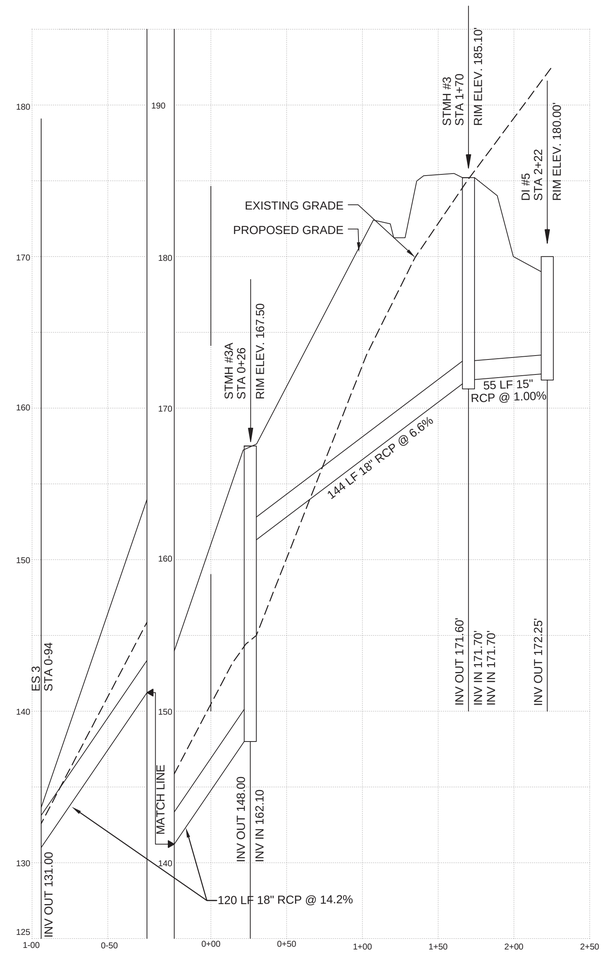

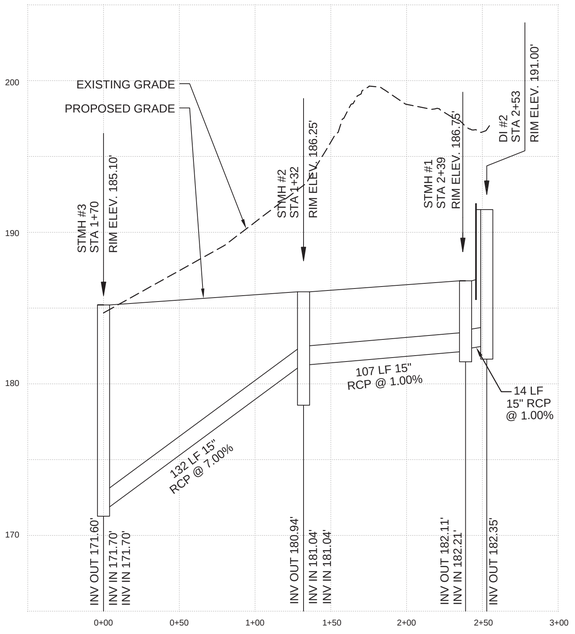

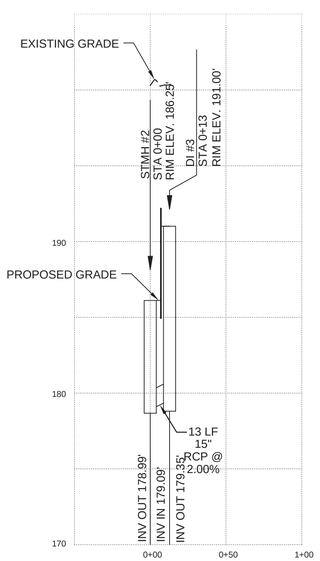

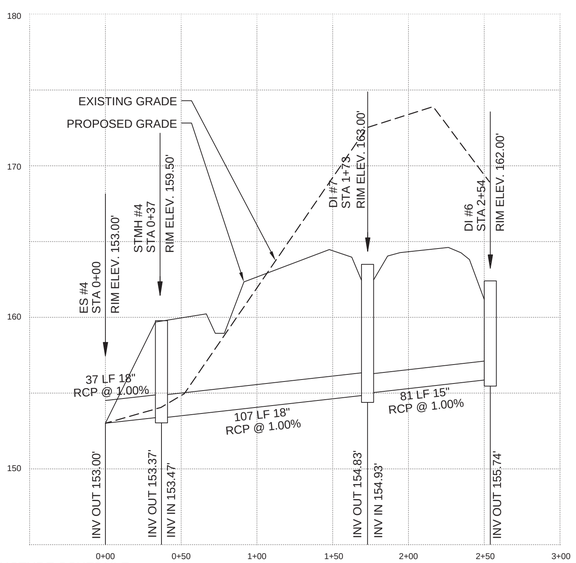

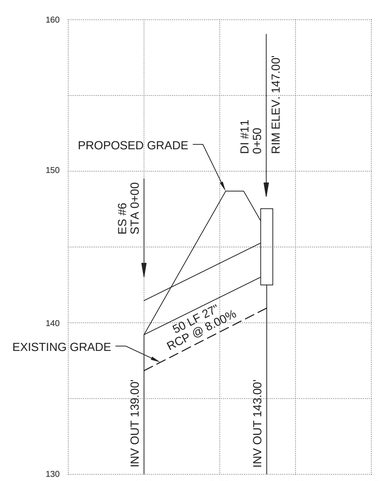

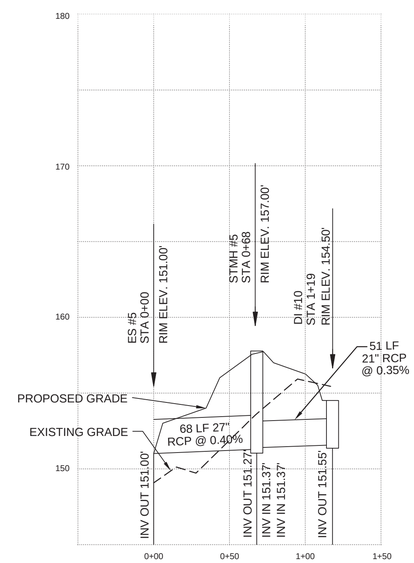

0 50' 100'
HORIZONTAL SCALE: 1"= 50'

0 10' 20'
VERTICAL SCALE: 1"= 10'

NOTE: 1. SEE SHEETS CG-101 THROUGH CG-106 FOR STORM STRUCTURE SCHEDULE.

SYM	DESCRIPTION	DATE	APPR

NAVFAC

COMMONWEALTH OF VIRGINIA
06/10/2015
BRADFORD D. WEINERT
No. 022244
PROFESSIONAL ENGINEER
SEAL

JACOBS
1100 NORTH GLEBE ROAD SUITE 500
ARLINGTON, VIRGINIA 22201
TEL (571) 218-1000 FAX (571) 218-1600
A/E INFO

APPROVED
FOR COMMANDER NAVFAC 16 Jun 2015
ACTIVITY
SATISFACTORY TO DATE 18 May 2015
DES HR DRW HR CHK RC
<<PM/DM>>
BRANCH MANAGER MS
CHIEF ENG/ARCH THC
FIRE PROTECTION KTD

DEPARTMENT OF THE NAVY
NAVAL FACILITIES ENGINEERING COMMAND
NAVAL FACILITIES ENGINEERING COMMAND
MARINE CORPS BASE – QUANTICO
QUANTICO, VA
P-635 ASP EXPANSION
SITE UTILITY PROFILES

SCALE: AS NOTED
EPROJECT NO.: 1312142
CONSTR. CONTR. NO.
NAVFAC DRAWING NO.
13072301
SHEET 85 OF 201
CU-208
DRAWFORM REVISION: 10 MARCH 2009

FILE NAME: C:\pwworking\ghol\crowlero\d0751223\NAVFAC_P635QU-208.dwg LAYOUT NAME: C-208 PLOTTED: Wednesday, June 10, 2015 - 4:49pm USER: crowlero

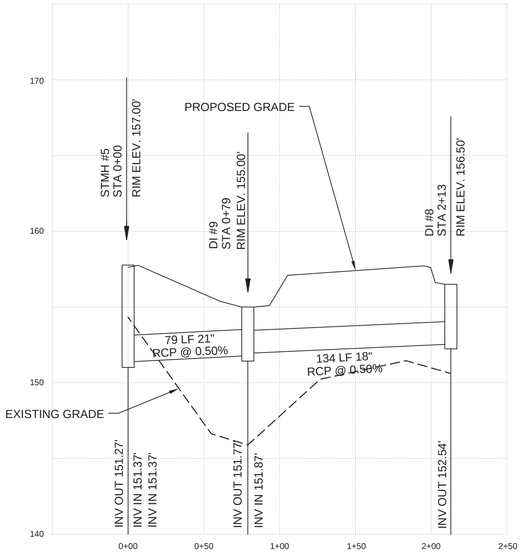

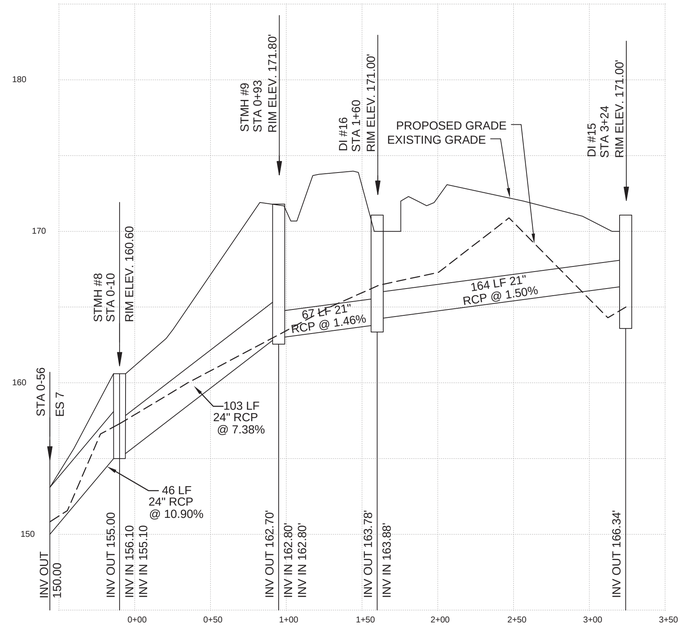

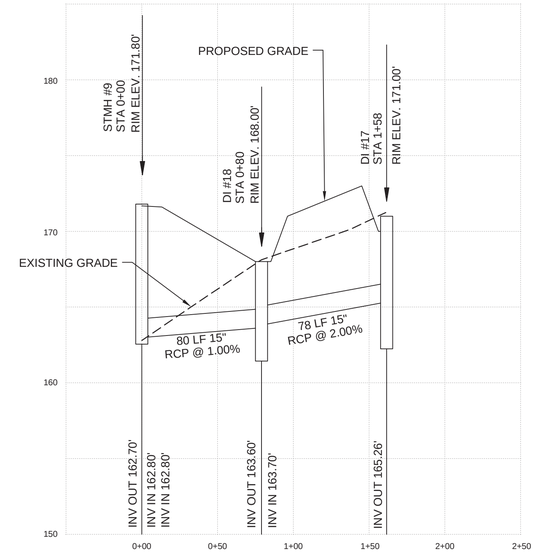

HORIZONTAL SCALE: 1"= 50'

VERTICAL SCALE: 1"= 10'

NOTE:

1. SEE SHEETS CG-101 THROUGH CG-106 FOR STORM STRUCTURE SCHEDULE.

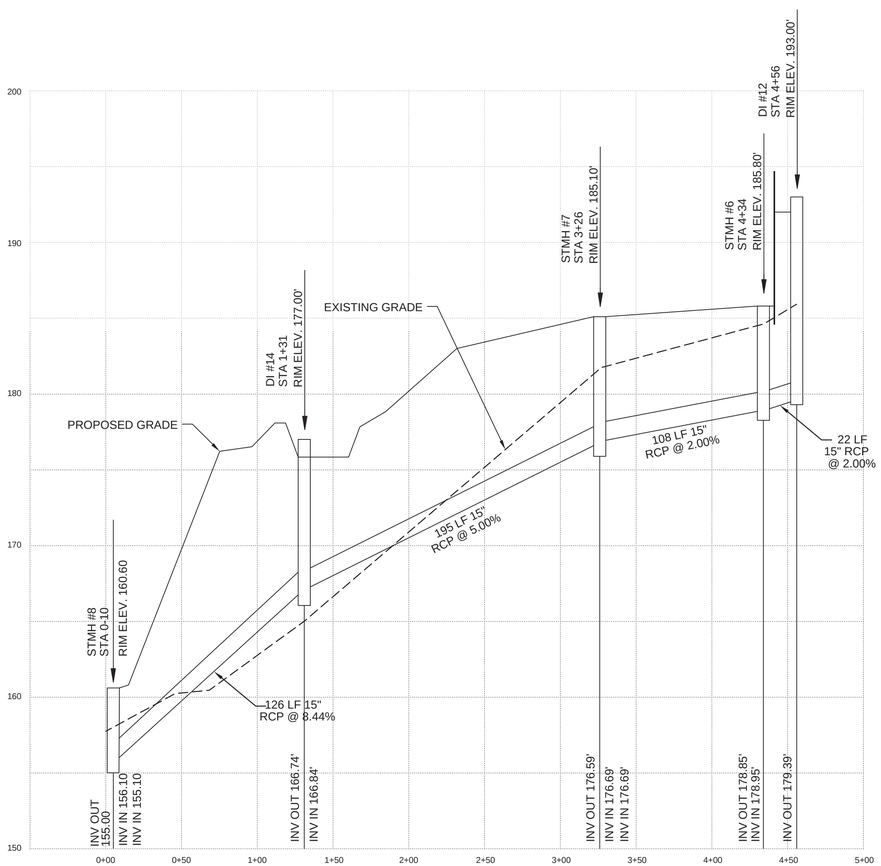

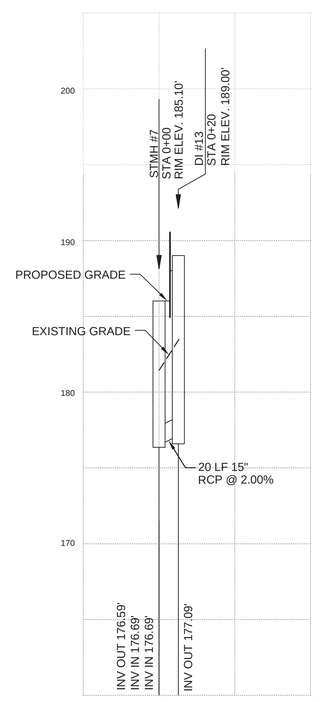

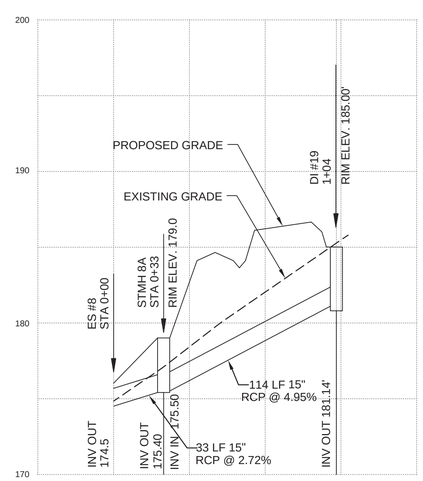

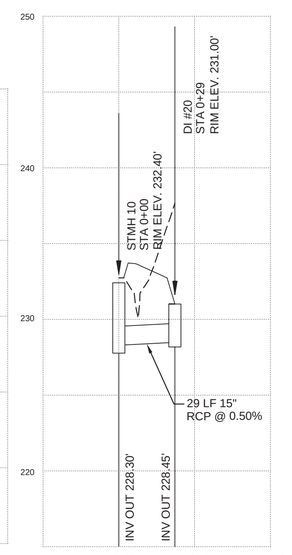

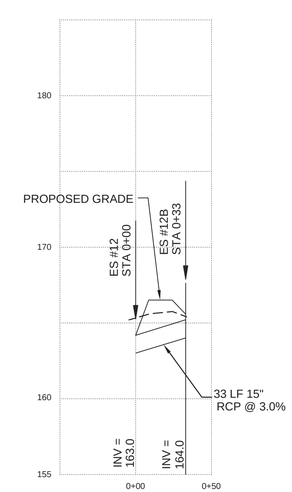

SYM	DESCRIPTION	DATE	APPR

NAVFAC

COMMONWEALTH OF VIRGINIA
06/10/2015
BRADFORD D. WEINERT
No. 022244
PROFESSIONAL ENGINEER

SEAL

JACOBS
1100 NORTH GLEBE ROAD SUITE 500
ARLINGTON, VIRGINIA 22201
TEL (571) 218-1000 FAX (571) 218-1600
A/E INFO

APPROVED
FOR COMMANDER NAVFAC 15 May 2015
ACTIVITY
SATISFACTORY TO DATE 15 May 2015
DES HR DRW HR CHK RC
<<CPM/DM>>
BRANCH MANAGER MS
CHIEF ENG/ARCH THC
FIRE PROTECTION KTD

DEPARTMENT OF THE NAVY
NAVAL FACILITIES ENGINEERING COMMAND
MARINE CORPS BASE – QUANTICO
QUANTICO, VA

P-635 ASP EXPANSION

SITE UTILITY PROFILES

SCALE: AS NOTED
EPROJECT NO.: 1312142
CONSTR. CONTR. NO.
NAVFAC DRAWING NO. 13072302
SHEET 86 OF 201

CU-209

DRAWFORM REVISION: 10 MARCH 2009

FILE NAME: C:\pwworking\gbno\crowlera\d0751223\NAVFAC_P635CU-209.dwg LAYOUT NAME: C-209 PLOTTED: Wednesday, June 10, 2015 - 4:49pm USER: crowlera

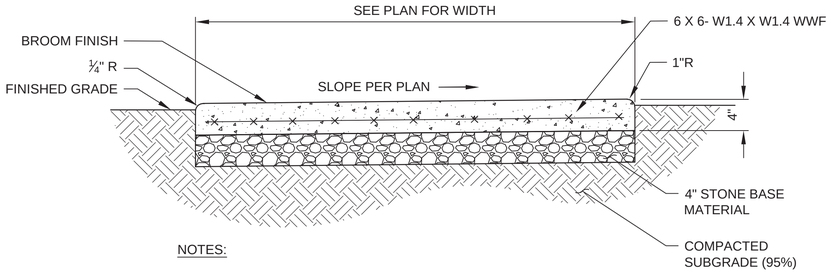

NOTES:

1. ANY SIDEWALK REMOVED SHALL BE REMOVED IN ITS ENTIRETY BETWEEN JOINTS. COMPLETE SLAB SHALL BE REPLACED AND NEW JOINTS PROVIDED IN ACCORDANCE WITH PROJECT SPECIFICATIONS. PROVIDE TRANSVERSE CONTRACTION JOINTS EVERY 5'.
2. SIDEWALK SHALL DRAIN AWAY FROM BUILDINGS. REFER TO GRADING PLANS FOR INFORMATION
3. MINIMUM SIDEWALK CROSS SLOPE SHALL BE 1%

CONCRETE SIDEWALK (D1)
(NOT TO SCALE) C-501

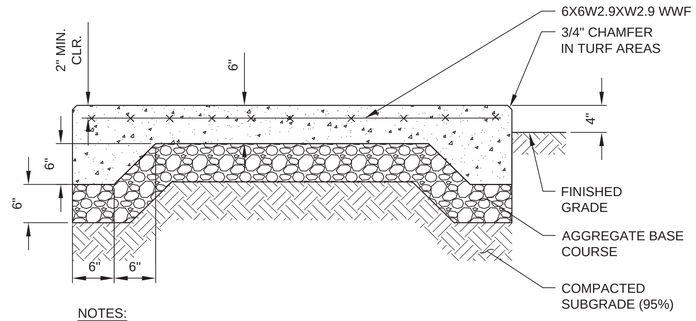

NOTES:

1. MIN. CONCRETE STRENGTH fc' = 4000psi
2. REFER TO SITE PLAN FOR FOR SLAB DIMENSIONS AND LOCATIONS.
3. EXTEND THE LENGTH AND WIDTH OF THE CONCRETE UTILITY PAD A MINIMUM OF 6 INCHES BEYOND THE LENGTH AND WIDTH OF THE SELECTED UTILITY EQUIPMENT ON EACH SIDE.
4. COORDINATE ANY CONDUIT PENETRATIONS WITH SELECTED ELECTRICAL/MECHANICAL EQUIPMENT.

CONCRETE UTILITY PAD (D3)
(NOT TO SCALE) C-501

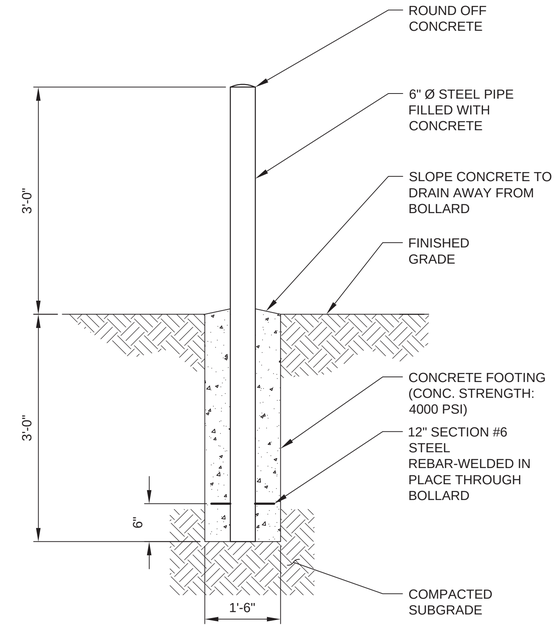

STEEL BOLLARD - FILLED W/ CONCRETE (D5)
(NOT TO SCALE) C-501

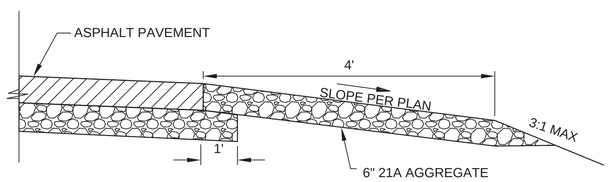

GRAVEL SHOULDER SECTION (C1)
(NOT TO SCALE) C-501

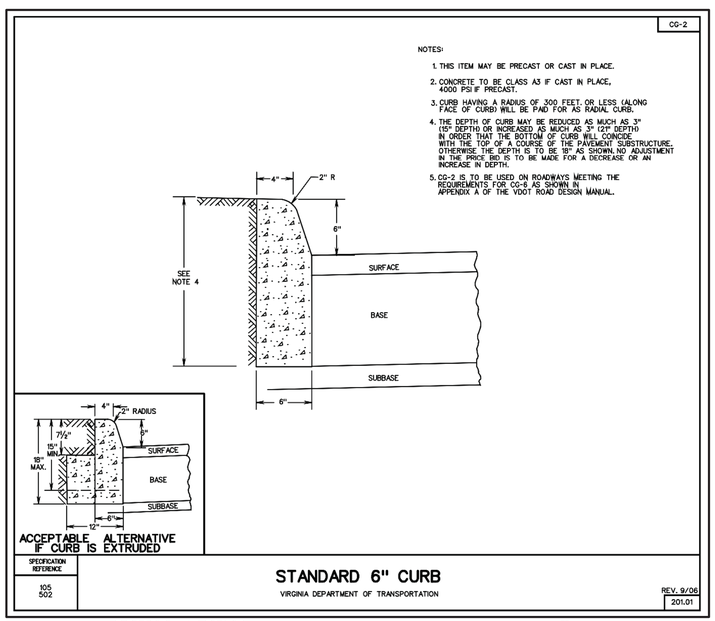

CONCRETE CURB (B3)
(NOT TO SCALE) C-501

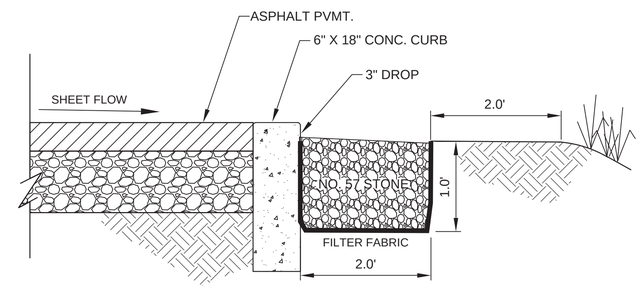

GRAVEL DIAPHRAGM (C5)
(NOT TO SCALE) C-501

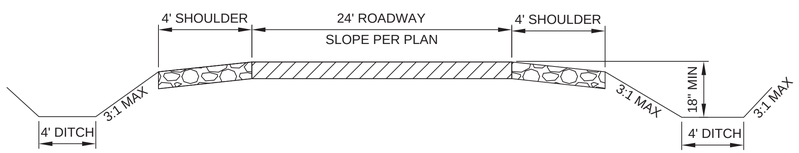

TYPICAL ASPHALT ROAD SECTION (B1)
(NOT TO SCALE) C-501

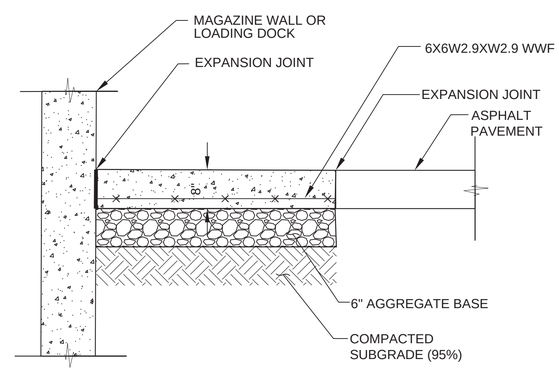

CONCRETE PAVEMENT DETAIL (A5)
(NOT TO SCALE) C-501

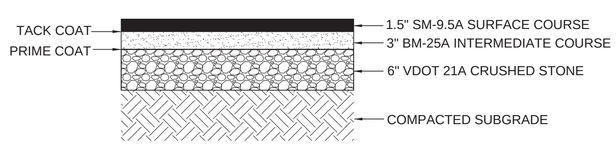

ASPHALT PAVEMENT SECTION (A1)
(NOT TO SCALE) C-501

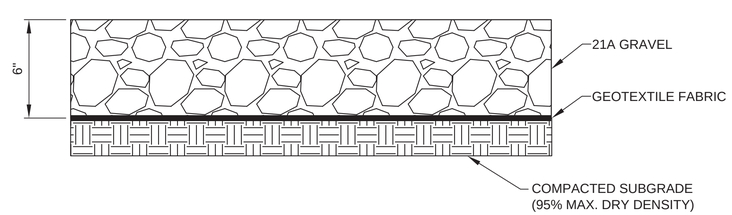

GRAVEL PERIMETER ROAD (A3)
(NOT TO SCALE) C-501

SYM	DESCRIPTION	DATE	APPR

NAVFAC

COMMONWEALTH OF VIRGINIA
06/10/2015
BRADFORD D. WEINERT
No. 022244
PROFESSIONAL ENGINEER
SEAL

JACOBS
1100 NORTH GLEBE ROAD SUITE 500
ARLINGTON, VIRGINIA 22201
TEL (571) 218-1000 FAX (571) 218-1600
A/E INFO

APPROVED
FOR COMMANDER NAVFAC
ACTIVITY
SATISFACTORY TO DATE 15 May 2015
DES HR DRW HR CHK RC
<CPM/DM>
BRANCH MANAGER MS
CHIEF ENG/ARCH THC
FIRE PROTECTION KTD

DEPARTMENT OF THE NAVY
NAVAL FACILITIES ENGINEERING COMMAND
NAVAL FACILITIES ENGINEERING COMMAND
MARINE CORPS BASE – QUANTICO
QUANTICO, VA
P-635 ASP EXPANSION
PAVEMENT DETAILS

SCALE: AS NOTED
EPROJECT NO.: 1312142
CONSTR. CONTR. NO.
NAVFAC DRAWING NO. 13072303
SHEET 87 OF 201
C-501

DRAWFORM REVISION: 10 MARCH 2009

FILE NAME: C:\pwworking\ghnd\crowlerca\d0751223\NAVFAC_P635C-501.dwg LAYOUT NAME: C-501 PLOTTED: Wednesday, June 10, 2015 – 4:01pm USER: crowlerca

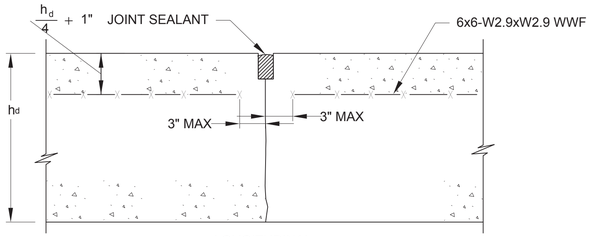

LONGITUDINAL

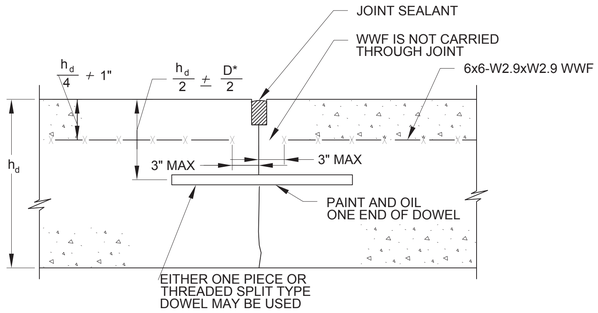

TRANSVERSE

NOTES:

1. SAW CUT SHALL NOT EXTEND BELOW STEEL REINFORCING.
2. ALL DOWEL BARS TO BE #5 BARS
3. h_d=DEPTH OF CONCRETE SLAB
4. D* = DOWEL DIAMETER

CONTRACTION JOINT (C1)
(NOT TO SCALE) C-502

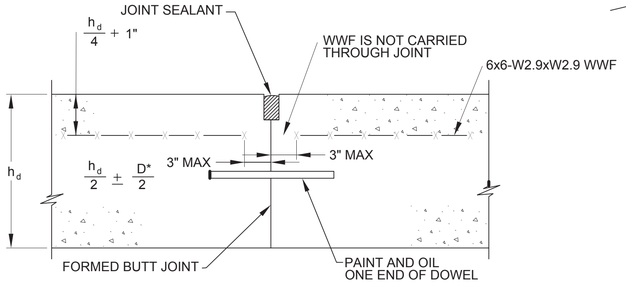

DOWELED TRANSVERSE OR LONGITUDINAL

NOTES:

1. SAW CUT SHALL NOT EXTEND BELOW STEEL REINFORCING.
2. ALL DOWEL BARS TO BE #5 BARS
3. h_d=DEPTH OF CONCRETE SLAB
4. D* = DOWEL DIAMETER, EITHER ONE PIECE OR THREADED SPLIT-TYPE DOWELS MAY BE USED

CONSTRUCTION JOINT (C3)
(NOT TO SCALE) C-502

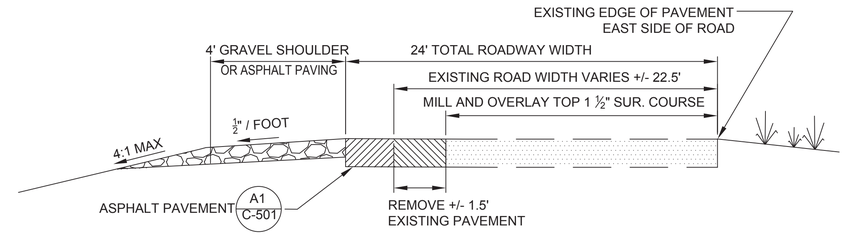

ACCESS ROAD MILLING & WIDENING (D5)
(NOT TO SCALE) C-502

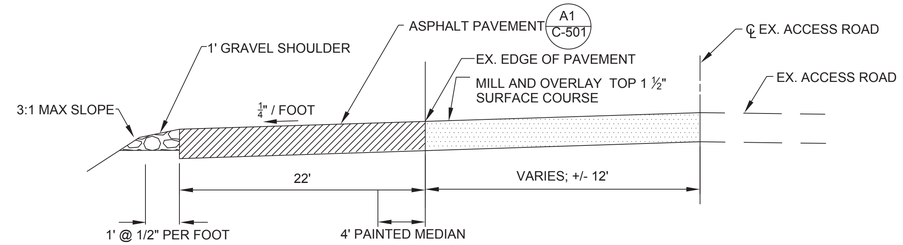

MILLING AND ROAD WIDENING AT SITE ENTRANCE (C5)
(NOT TO SCALE) C-502

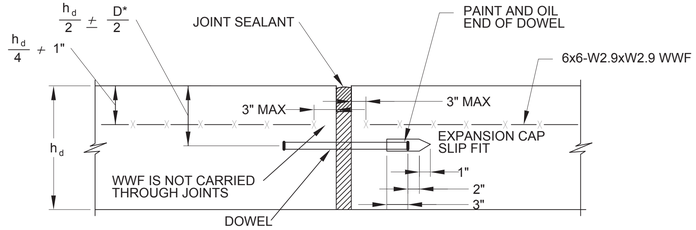

D* DENOTES DOWEL DIAMETER, EITHER ONE PIECE OR THREADED SPLIT-TYPE DOWELS MAY BE USED

TRANSVERSE

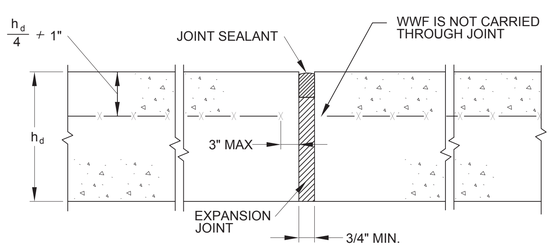

LONGITUDINAL

NOTES:

1. SAW CUT SHALL NOT EXTEND BELOW STEEL REINFORCING.
2. h_d=DEPTH OF CONCRETE SLAB
3. D* = DOWEL DIAMETER

EXPANSION JOINT (A1)
(NOT TO SCALE) C-502

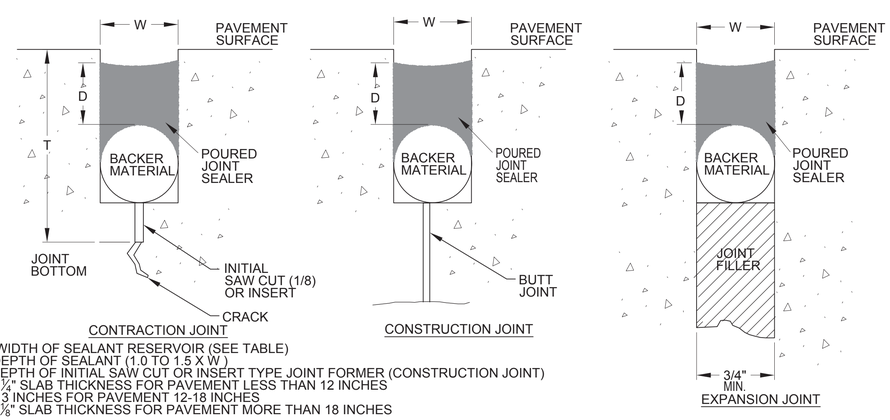

W = WIDTH OF SEALANT RESERVOIR (SEE TABLE)
D = DEPTH OF SEALANT (1.0 TO 1.5 X W)
T = DEPTH OF INITIAL SAW CUT OR INSERT TYPE JOINT FORMER (CONSTRUCTION JOINT)
a). ¼" SLAB THICKNESS FOR PAVEMENT LESS THAN 12 INCHES
b). 3 INCHES FOR PAVEMENT 12-18 INCHES
c). ⅛" SLAB THICKNESS FOR PAVEMENT MORE THAN 18 INCHES

JOINT SPACING, FT.	WIDTH, IN.	
	MIN.	MAX.
<25	1/2	5/8
24 - 50	3/4	7/8
>50	1.0	1-1/8

CONTRACTION JOINT SEALANT (A2)
(NOT TO SCALE) C-502

CONSTRUCTION JOINT SEALANT (A3)
(NOT TO SCALE) C-502

EXPANSION JOINT SEALANT (A4)
(NOT TO SCALE) C-502

SYM	DESCRIPTION	DATE	APPR

NAVFAC

COMMONWEALTH OF VIRGINIA
06/10/2015
BRADFORD D. WEINERT
No. 022244
PROFESSIONAL ENGINEER
SEAL

JACOBS
1100 NORTH GLEBE ROAD SUITE 500
ARLINGTON, VIRGINIA 22201
TEL (571) 218-1000 FAX (571) 218-1600
A/E INFO

APPROVED
FOR COMMANDER NAVFAC 12 June 2015
ACTIVITY
SATISFACTORY TO 15 May 2015 DATE
DES HR DRW HR CHK RC
<<PM/DM>>
BRANCH MANAGER MS
CHIEF ENG/ARCH THC
FIRE PROTECTION KTD

DEPARTMENT OF THE NAVY
NAVAL FACILITIES ENGINEERING COMMAND
NAVAL FACILITIES ENGINEERING COMMAND
MARINE CORPS BASE – QUANTICO
QUANTICO, VA
P-635 ASP EXPANSION
PAVEMENT DETAILS

SCALE: AS NOTED
EPROJECT NO.: 1312142
CONSTR. CONTR. NO.
NAVFAC DRAWING NO. 13072304
SHEET 88 OF 201
C-502

DRAWFORM REVISION: 10 MARCH 2009

FILE NAME: C:\pwworking\gbno\crowlero\d0751223\NAVFAC_P635C-502.dwg LAYOUT NAME: C-502 PLOTTED: Wednesday, June 10, 2015 - 4:02pm USER: crowlero

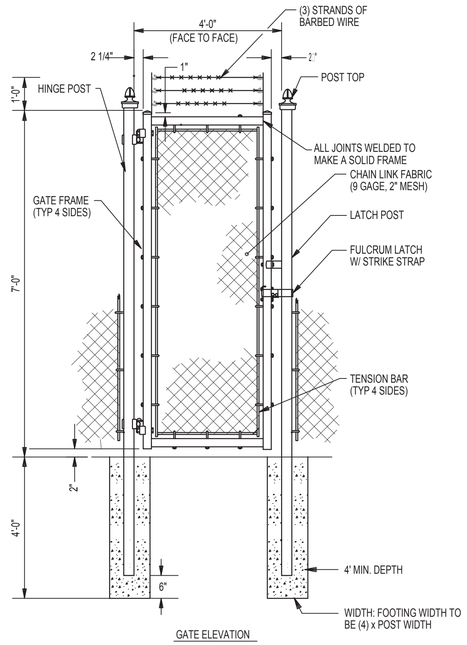

PEDESTRIAN SWING GATE
(NOT TO SCALE) C-503 C1

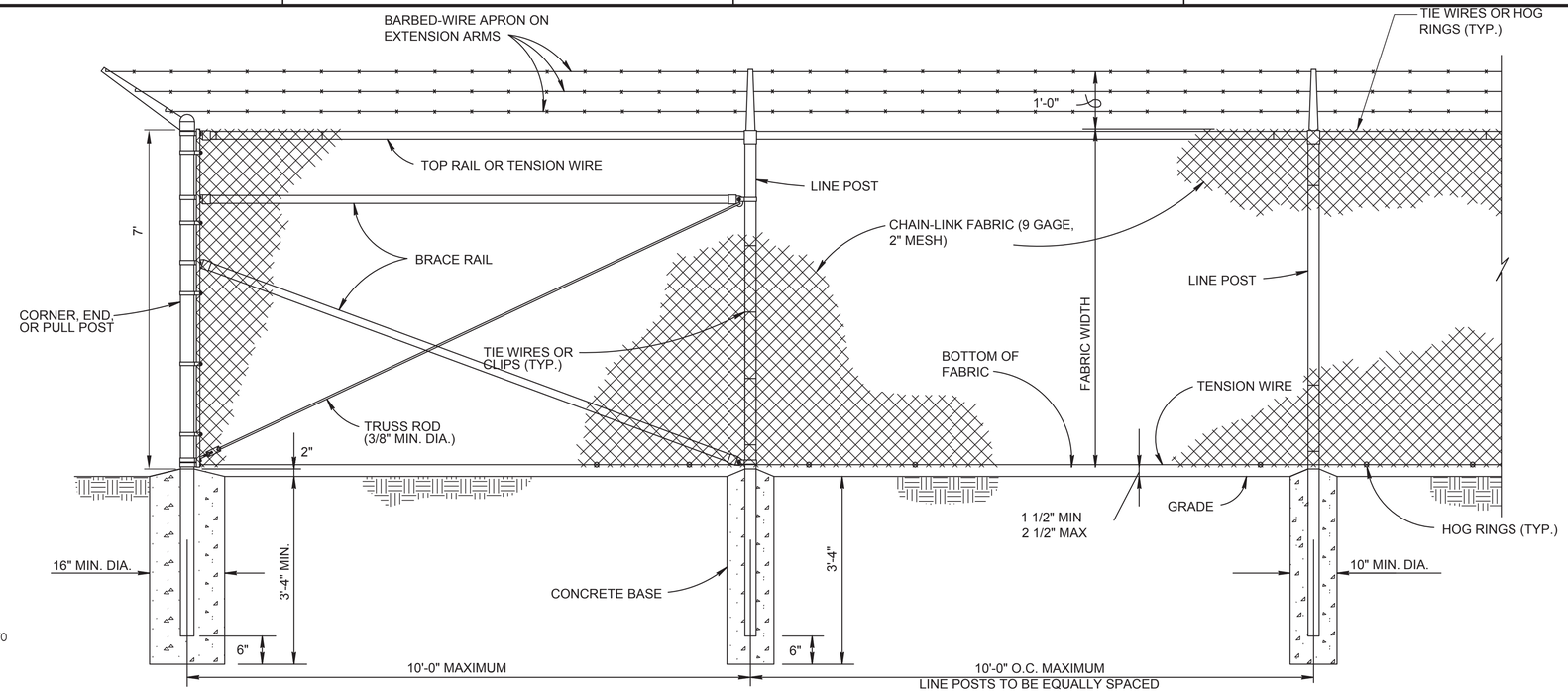

CHAIN LINK FENCE
(NOT TO SCALE) C-503 A4

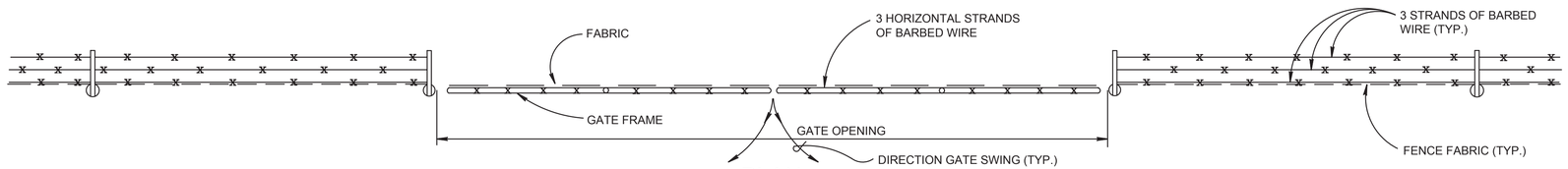

PLAN

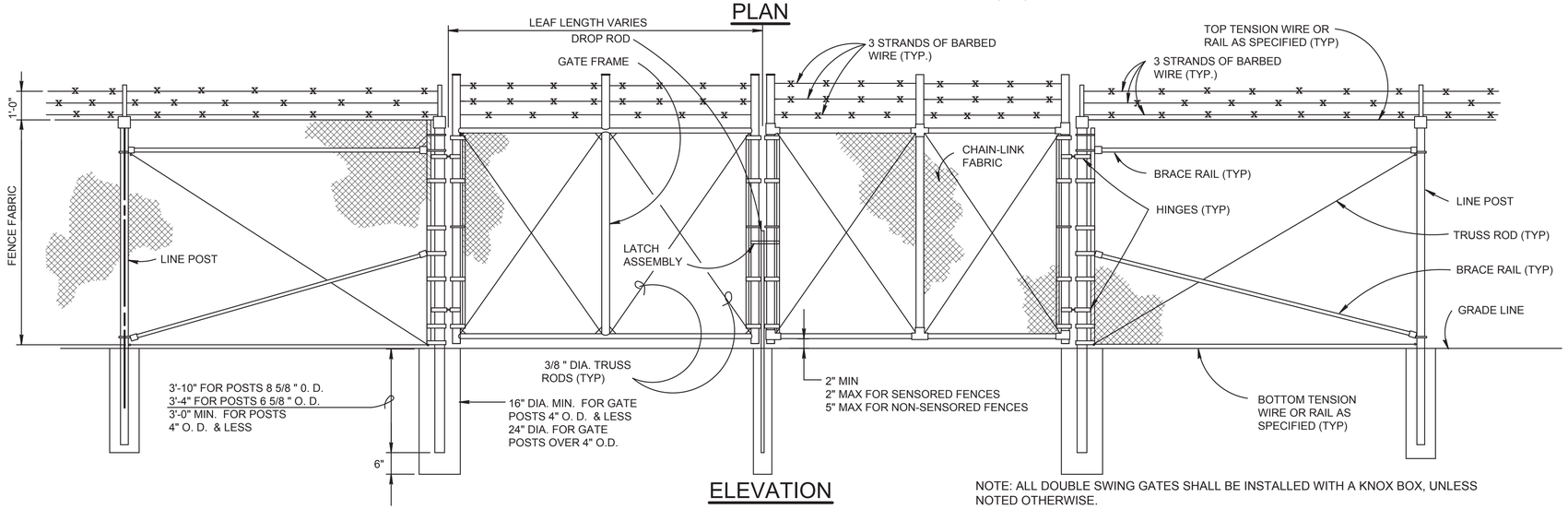

ELEVATION

NOTE: ALL DOUBLE SWING GATES SHALL BE INSTALLED WITH A KNOX BOX, UNLESS NOTED OTHERWISE.

DOUBLE SWING GATE
(NOT TO SCALE) C-503 A1

SYM	DESCRIPTION	DATE	APPR

NAVFAC

COMMONWEALTH OF VIRGINIA
06/10/2015
BRADFORD D. WEINERT
No. 022244
PROFESSIONAL ENGINEER
SEAL

JACOBS
1100 NORTH GLEBE ROAD SUITE 500
ARLINGTON, VIRGINIA 22201
TEL (571) 218-1000 FAX (571) 218-1600
A/E INFO

APPROVED
FOR COMMANDER NAVFAC 10 June 2015
ACTIVITY
SATISFACTORY TO DATE 18 May 2015
DES HR DRW HR CHK RC
<<PM/DM>>
BRANCH MANAGER MS
CHIEF ENG/ARCH THC
FIRE PROTECTION KTD

DEPARTMENT OF THE NAVY
NAVAL FACILITIES ENGINEERING COMMAND
MARINE CORPS BASE – QUANTICO
QUANTICO, VA
P-635 ASP EXPANSION
FENCING AND GUARDRAIL DETAILS

SCALE: AS NOTED
EPROJECT NO.: 1312142
CONSTR. CONTR. NO.
NAVFAC DRAWING NO. 13072305
SHEET 89 OF 201
C-503
DRAWFORM REVISION: 10 MARCH 2009

FILE NAME: C:\pwworking\gbna\crowlera\d0751223\NAVFAC_P635C-503.dwg LAYOUT NAME: C-503 PLOTTED: Wednesday, June 10, 2015 - 4:02pm USER: crowlera

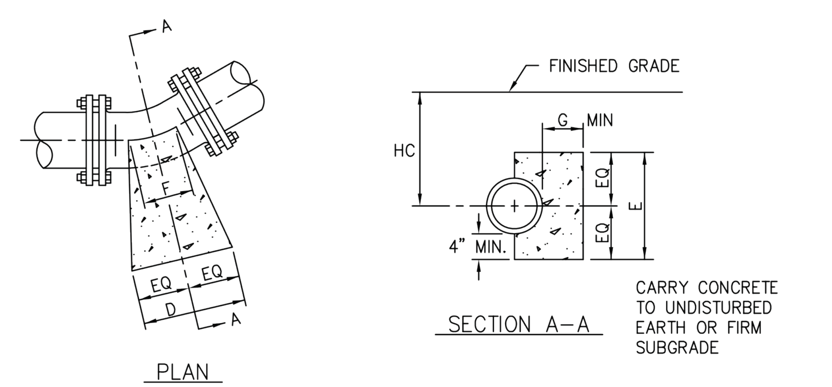

SOIL PROPERTIES	SIZE	Concrete Block Dimensions At 150 PSI Pressure D	E	F	G	Add To Dimension D For Each Add 50 PSI Pressure Up To 300 PSI	Adjustment For Conc. Area For Different Height HC To Be Measured From Grade to ℄ Of Pipe: Up To 8'	8'-1" To 12'	12'-1" To 16'	16'-1" To 20'
CS = 1000 PSF φ = 15° SOFT SILTY CLAY & BETTER	3"	4"	1'	4"	6"	2"	CONC. BLOCK AREA 1.0 X D X E	CONC. BLOCK AREA 0.875 X D X E	CONC. BLOCK AREA 0.75 X D X E	CONC. BLOCK AREA 0.625 X D X E
	4"	4"	1'	4"	6"	2"				
	6"	6"	1'-2"	6"	7"	2"				
	8"	8"	1'-4"	8"	7"	2"				
	10"	9"	1'-6"	8"	8"	4"				
	12"	1'	1'-8"	1'	9"	4"				
	16"	1'-3"	2'	1'	9"	6"				
	20"	1'-3"	2'-6"	1'	10"	6"				
	24"	1'-6"	3'	1'	1'	6"				
	30"	2'	3'-6"	1'-4"	1'-2"	9"				
CS = 0 φ = 15° LOOSE SILTY SAND	3"	10"	1'-6"	6"	9"	2"	CONC. BLOCK AREA 1.0 X D X E	CONC. BLOCK AREA 0.5 X D X E	CONC. BLOCK AREA 0.375 X D X E	CONC. BLOCK AREA 0.25 X D X E
	4"	1'	2'	6"	9"	2"				
	6"	1'-6"	2'	6"	1'	2"				
	8"	2'-4"	2'	8"	1'	2"				
	10"	2'-6"	2'-3"	8"	1'	4"				
	12"	3'-4"	2'-6"	1'	1'	4"				
	16"	4'-2"	3'	1'	1'-6"	6"				
	20"	4'-6"	3'-6"	1'	1'-6"	6"				
	24"	5'-8"	4'	1'-6"	1'-6"	6"				
	30"	7'	5'	2'	1'-6"	9"				

1) DIMENSION D & E SHALL BE ADJUSTED FOR REQUIRED AREA.
2) DIMENSION F & G SHALL REMAIN SAME.
3) DIMENSION D SHALL BE ADJUSTED FOR REQUIRED PRESSURE IN EXCESS OF 150 PSI BEFORE MAKING ADJUSTMENT FOR HEIGHT.
4) THRUST BLOCKS SHALL BE INSTALLED ONLY WHERE APPROVED BY THE DEPARTMENT OF UTILITIES.

DECEMBER 2004 | 1.4.1-1

STAFFORD COUNTY DEPARTMENT OF UTILITIES | BUTTRESSES FOR 11 1/4° HORIZONTAL BEND

SOIL PROPERTIES	SIZE	Concrete Block Dimensions At 150 PSI Pressure D	E	F	G	Add To Dimension D For Each Add 50 PSI Pressure Up To 300 PSI	Adjustment For Conc. Area For Different Height HC To Be Measured From Grade to ℄ Of Pipe: Up To 8'	8'-1" To 12'	12'-1" To 16'	16'-1" To 20'
CS = 1000 PSF φ = 15° SOFT SILTY CLAY OR BETTER	3"	9"	1'-0"	6"	6"	4"	CONC. BLOCK AREA 1.0 X D X E	CONC. BLOCK AREA 0.875 X D X E	CONC. BLOCK AREA 0.75 X D X E	CONC. BLOCK AREA 0.625 X D X E
	4"	9"	1'-0"	6"	6"	4"				
	6"	1'-0"	1'-2"	6"	8"	4"				
	8"	1'-6"	1'-4"	8"	9"	6"				
	10"	2'-0"	1'-6"	8"	10"	6"				
	12"	2'-6"	1'-8"	1'-0"	1'-0"	9"				
	16"	3'-6"	2'-6"	1'-0"	1'-3"	9"				
	20"	4'-8"	2'-6"	1'-0"	1'-4"	1'-4"				
	24"	5'-0"	3'-0"	1'-0"	1'-9"	2'-0"				
	30"	6'-0"	4'-0"	1'-4"	2'-3"	2'-0"				
CS = 0 φ = 15° LOOSE SILTY SAND	3"	1'-6"	1'-6"	6"	1'-0"	4"	CONC. BLOCK AREA 1.0 X D X E	CONC. BLOCK AREA 0.5 X D X E	CONC. BLOCK AREA 0.375 X D X E	CONC. BLOCK AREA 0.25 X D X E
	4"	2'-0"	2'-0"	6"	1'-0"	4"				
	6"	3'-0"	2'-0"	6"	1'-0"	4"				
	8"	4'-0"	2'-6"	8"	1'-0"	6"				
	10"	6'-0"	2'-6"	8"	1'-0"	6"				
	12"	7'-0"	3'-0"	1'-0"	1'-6"	9"				
	16"	11'-0"	4'-0"	1'-0"	1'-6"	9"				
	20"	11'-8"	5'-0"	1'-0"	2'-0"	1'-4"				
	24"	12'-6"	6'-0"	1'-6"	2'-0"	2'-0"				
	30"	20'-0"	6'-0"	2'-0"	2'-6"	2'-0"				

1) DIMENSION D & E SHALL BE ADJUSTED FOR REQUIRED AREA.
2) DIMENSION F & G SHALL REMAIN SAME.
3) DIMENSION D SHALL BE ADJUSTED FOR REQUIRED PRESSURE IN EXCESS OF 150 PSI BEFORE MAKING ADJUSTMENT FOR HEIGHT.
4) THRUST BLOCKS SHALL BE INSTALLED ONLY WHERE APPROVED BY THE DEPARTMENT OF UTILITIES.

1.4.1-3

SOIL PROPERTIES	SIZE	CONCRETE BLOCK DIMENSIONS AT 150 PSI PRESSURE D	E	F	G	ADD TO DIMENSION D FOR EACH ADD 50 PSI PRESSURE UP TO 300 PSI	Adjustment For Conc. Area For Different Height HC To Be Measured From Grade to ℄ Of Pipe: Up To 8'	8'-1" To 12'	12'-1" To 16'	16'-1" To 20'
CS = 1000 PSF φ = 15° SOFT SILTY CLAY OR BETTER	3"	6"	1'-0"	6"	7"	2"	CONC. BLOCK AREA = 1.0 X D X E	CONC. BLOCK AREA = 0.875 X D X E	CONC. BLOCK AREA = 0.75 X D X E	CONC. BLOCK AREA = 0.625 X D X E
	4"	6"	1'-0"	6"	7"	2"				
	6"	8"	1'-2"	6"	8"	2"				
	8"	1'-0"	1'-4"	8"	8"	4"				
	10"	1'-3"	1'-6"	8"	10"	4"				
	12"	1'-6"	1'-8"	1'-0"	1'-0"	6"				
	16"	2'-0"	2'-0"	1'-0"	1'-3"	6"				
	20"	2'-6"	2'-6"	1'-0"	1'-6"	9"				
	24"	3'-0"	3'-0"	1'-0"	1'-6"	9"				
	30"	4'-0"	3'-6"	1'-4"	1'-9"	1'-0"				
CS = 0 φ = 15° LOOSE SILTY SAND	3"	1'-0"	1'-6"	6"	9"	2"	CONC. BLOCK AREA = 1.0 X D X E	CONC. BLOCK AREA = 0.5 X D X E	CONC. BLOCK AREA = 0.375 X D X E	CONC. BLOCK AREA = 0.25 X D X E
	4"	1'-6"	2'-0"	6"	9"	2"				
	6"	2'-0"	2'-0"	6"	1'-0"	2"				
	8"	3'-4"	2'-0"	8"	1'-0"	4"				
	10"	4'-2"	2'-3"	8"	1'-0"	4"				
	12"	4'-8"	2'-9"	1'-0"	1'-6"	6"				
	16"	5'-9"	3'-6"	1'-0"	1'-6"	6"				
	20"	7'-10"	4'-0"	1'-0"	2'-0"	9"				
	24"	9'-10"	5'-0"	1'-6"	2'-0"	9"				
	30"	11'-8"	6'-0"	2'-0"	2'-0"	1'-0"				

DIMENSION D & E SHALL BE ADJUSTED FOR REQUIRED AREA.
DIMENSION F & G SHALL REMAIN SAME.
DIMENSION D SHALL BE ADJUSTED FOR REQUIRED PRESSURE IN EXCESS OF 150 PSI BEFORE MAKING ADJUSTMENT FOR HEIGHT.

1.4.1-2

NOTES:

1. FC = 3000 PSI AT 28 DAYS.
2. CS = SOIL COHESION IN PSF AND φ = ANGLE OF INTERNAL FRICTION.
3. CARRY ALL BEARING SURFACES TO UNDISTURBED GROUND OR FIRM SUBGRADE.
4. THRUST BLOCKS SHALL BE INSTALLED ONLY WHERE APPROVED BY THE DEPARTMENT OF UTILITIES.

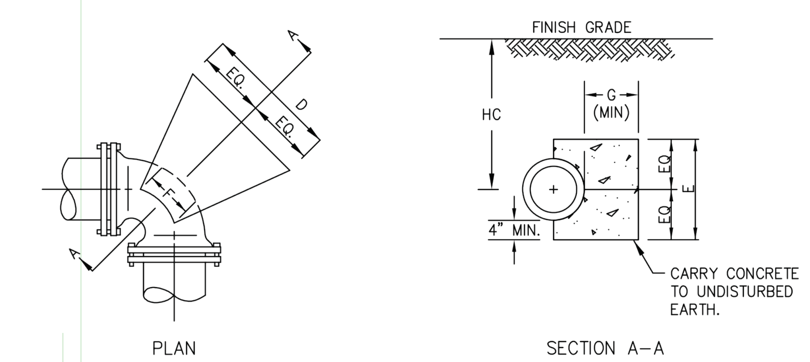

SIZE	Concrete Block Dimensions At 150 PSI Pressure D	E	F	G	Add to Dimension "D" For Each Add'l 50 PSI Pressure Up To 300 PSI	Adjustment for Conc. Area For Different Height (HC) To Be Measured From Grade To C of Pipe: Up To 8'-0"	8'-1" To 12'	12'-1" To 16'	16'-1" To 20'
3"	2'-6"	2'-0"	8"	1'-0"	6"	CONC. BLOCK AREA 1.0 X D X E	C. B. A. 0.5 X D X E	C. B. A. 0.375 X D X E	C. B. A. 0.25 X D X E
4"	3'-4"	2'-0"	8"	1'-0"	6"				
6"	5'-2"	2'-0"	1'-0"	1'-6"	6"				
8"	6'-8"	2'-6"	1'-0"	1'-6"	9"				
10"	10'-0"	3'-0"	1'-6"	1'-6"	9"				
12"	10'-0"	4'-0"	1'-6"	2'-0"	1'-0"				
16"	12'-6"	5'-0"	2'-0"	2'-0"	1'-0"				
20"	15'-10"	6'-0"	2'-0"	2'-0"	2'-0"				

1) DIMENSION D & E SHALL BE ADJUSTED FOR REQUIRED AREA.
2) DIMENSION F & G SHALL REMAIN SAME.
3) DIMENSION D SHALL BE ADJUSTED FOR REQUIRED PRESSURE IN EXCESS OF 150 PSI BEFORE MAKING ADJUSTMENT FOR HEIGHT.
4) THRUST BLOCKS SHALL BE INSTALLED ONLY WHERE APPROVED BY THE DEPARTMENT OF UTILITIES.
5) SPECIAL DESIGN REQUIRED FOR LINES 24" IN DIAMETER OR GREATER.

DECEMBER 2004 | 1.4.1-4

STAFFORD COUNTY DEPARTMENT OF UTILITIES | BUTTRESSES FOR 90° HORIZONTAL BEND

THRUST BLOCK DETAILS
(NOT TO SCALE) C-504 (C1)

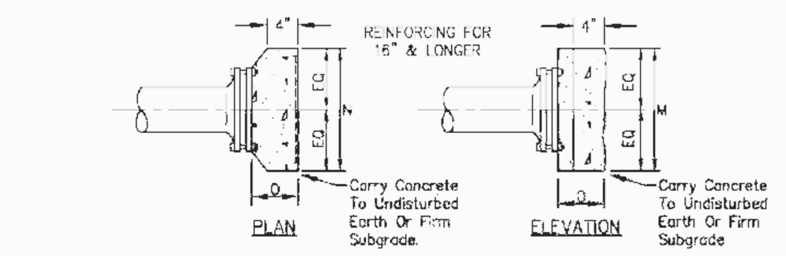

	BUTTRESS FOR PLUGS & CAPS SIZE 3"	4"	6"	8"	10"	12"	16"	20"	24"	30"
M	*	*	*	2'-6"	2'-8"	3'-6"	4'-8"	6'-0"	6'-8"	8'-0"
N	*	*	*	1'-6"	2'-2"	2'-6"	3'-4"	4'-0"	5'-0"	6'-8"
O	*	*	*	10"	1'-0"	1'-2"	1'-4"	1'-6"	1'-8"	2'-0"

REINFORCE WITH 66" EW

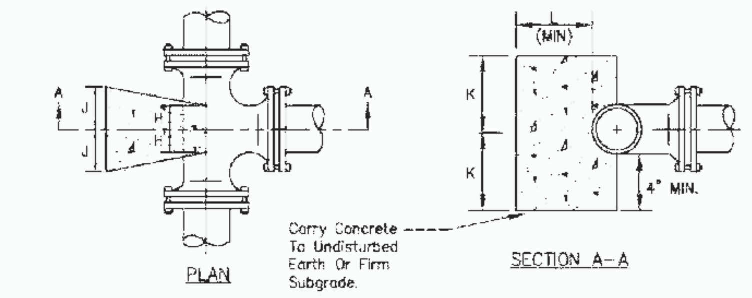

	BUTTRESS FOR TEES SIZE OF BRANCH 3"	4"	6"	8"	10"	12"	16"	20"	24"	30"
J	6"	6"	8"	9"	1'-1"	1'-3"	1'-8"	2'-0"	2'-6"	3'-4"
K	6"	8"	10"	1'-3"	1'-4"	1'-9"	2'-4"	3'-0"	3'-4"	4'-0"
L	6"	6"	8"	9"	10"	12"	1'-2"	1'-6"	1'-8"	2'-0"
H	4"	4"	6"	6"	6"	6"	8"	1'-0"	1'-0"	1'-0"

AREA OF BLOCK = 2J X 2K   NOTE: TAPPING ASSEMBLIES & SLEEVES TO BE CONCRETE BLOCKED AS COMPARABLE SIZED TEES

NOTES:

1. Fc = 3000 PSI AT 28 DAYS.
2. THE BUTTRESS DIMENSIONS ARE BASED ON THE WATER PRESSURE OF 150 PSI WHERE THE PRESSURE IS DIFFERENT, THE AREA OF BLOCK SHALL BE PROPORTIONED TO REQUIRED PRESSURE
3. CARRY ALL BEARING SURFACES TO UNDISTURBED GROUND OR FIRM SUBGRADE
4. THRUST BLOCKS SHALL BE INSTALLED ONLY WHERE APPROVED BY THE UTILITY DEPARTMENT.

DECEMBER 2004 | 1.4.1-5

STAFFORD COUNTY DEPARTMENT OF UTILITIES | BUTTRESSES FOR TEES, PLUGS & CAPS

BUTTRESS DETAILS FOR TEES, CAPS & PLUGS
(NOT TO SCALE) C-504 (C4)

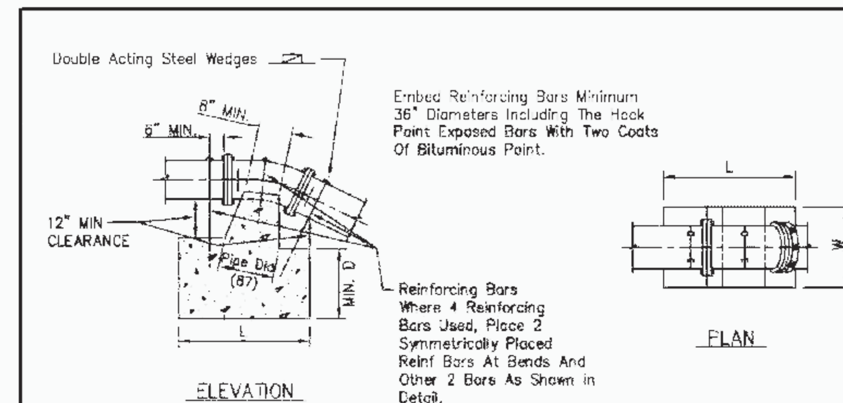

BEND		SIZE 3"	4"	6"	8"	10"	12"	16"	20"	24"	30"
11 1/4°	L	1'-6"	1'-6"	2'-0"	2'-0"	2'-3"	2'-6"	3'-3"	4'-0"	4'-6"	5'-0"
	W	1'-6"	1'-6"	2'-0"	2'-0"	2'-3"	2'-6"	3'-3"	4'-0"	4'-6"	5'-0"
	D	1'-6"	1'-6"	1'-6"	2'-0"	2'-0"	2'-3"	2'-6"	2'-6"	3'-0"	3'-0"
	Reinf Bars No & Size	3 #5	3 #5	3 #5	3 #6	3 #6	3 #6	3 #6	3 #8	3 #8	3 #8
22 1/2°	L	1'-6"	2'-0"	2'-6"	2'-9"	3'-6"	4'-0"	4'-6"	5'-6"	6'-0"	7'-0"
	W	1'-6"	2'-0"	2'-6"	2'-9"	3'-6"	4'-0"	4'-6"	5'-6"	6'-0"	7'-0"
	D	1'-6"	1'-6"	2'-0"	2'-3"	2'-3"	2'-6"	3'-0"	3'-6"	4'-0"	4'-6"
	Reinf Bars No & Size	3 #5	3 #5	3 #5	3 #6	3 #6	4 #6	4 #6	3 #8	4 #8	4 #8
45°	L	2'-0"	2'-6"	3'-0"	3'-6"	4'-0"	4'-6"	6'-0"	7'-6"	8'-6"	10'-0"
	W	2'-0"	2'-6"	3'-0"	3'-6"	4'-0"	4'-6"	6'-0"	7'-6"	8'-6"	10'-0"
	D	1'-6"	2'-0"	2'-0"	2'-6"	2'-9"	3'-0"	3'-6"	4'-0"	4'-6"	5'-0"
	Reinf Bars No & Size	3 #5	3 #5	3 #5	3 #6	4 #6	4 #6	4 #8	4 #8	4 #8	4 #9

NOTES:
1. Fc=3000 PSI AT 28 DAYS.
2. Carry All Bearing Surfaces To Undisturbed Earth Or Firm Subgrade.
3. The Anchorage Dimensions Are Based On The Water Pressure Of 150 PSI, Where The Pressure Is Different, The Volume Of The Concrete (I.E. L x W x D) Shall Be Proportioned To Required Pressure.
4. Thrust Blocks Shall Be installed Only Where Approved By The Department Of Utilities.

DECEMBER 2004 | 1.4.1-6

STAFFORD COUNTY DEPARTMENT OF UTILITIES | ANCHORAGE FOR 11 1/4°, 22 1/2° & 45° UPPER VERT. BENDS

ANCHORAGE DETAIL FOR UPPER VERT. BENDS
(NOT TO SCALE) C-504 (C5)

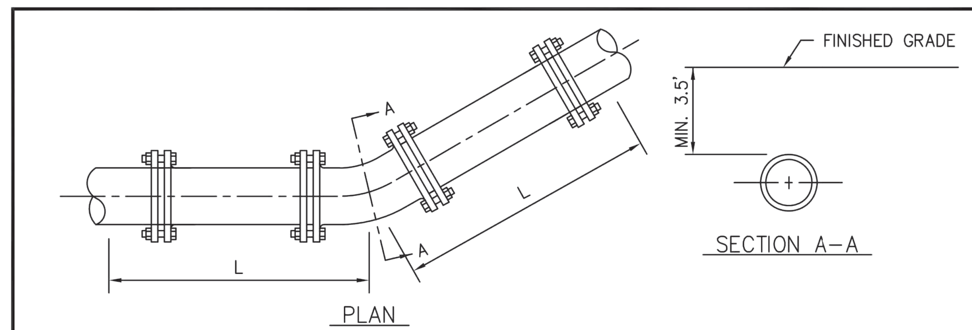

L : RESTRAINED LENGTHS FOR PVC AND POLYWRAPPED PIPES (FEET)											
DIAMETER OF PIPE	3"	4"	6"	8"	10"	12"	16"	18"	20"	24"	30"
11 1/4° HORIZ. BEND	2'	3'	4'	5'	6'	7'	9'	10'	11'	12'	15'
22 1/2° HORIZ. BEND	4'	5'	7'	10'	12'	14'	18'	20'	21'	25'	30'
45° HORIZ. BEND	9'	11'	15'	20'	24'	28'	37'	41'	45'	52'	63'
90° HORIZ. BEND	22'	26'	37'	48'	58'	69'	89'	98'	108'	126'	152'
DEAD ENDS & VALVES	43'	52'	75'	98'	119'	141'	184'	205'	225'	267'	326'

L : RESTRAINED LENGTHS FOR BARE DUCTILE IRON PIPES (FEET)											
DIAMETER OF PIPE	3"	4"	6"	8"	10"	12"	16"	18"	20"	24"	30"
11 1/4° HORIZ. BEND	2'	2'	3'	4'	6'	6'	8'	8'	9'	11'	13'
22 1/2° HORIZ. BEND	4'	5'	6'	8'	10'	12'	15'	17'	19'	22'	26'
45° HORIZ. BEND	8'	9'	13'	17'	21'	25'	32'	36'	39'	46'	55'
90° HORIZ. BEND	19'	23'	32'	42'	51'	60'	77'	86'	94'	110'	133'
DEAD ENDS & VALVES	30'	37'	52'	68'	83'	99'	129'	143'	158'	187'	228'

1) SOIL DESIGNATION IS COHESIVE GRANULAR
2) MINIMUM DEPTH OF COVER IS 3.5 FT.
3) USE TYPE 3 LAYING CONDITIONS.
4) DESIGN PRESSURE IS 100 PSI WORKING PRESSURE + 120 PSI SURGE ALLOWANCE
5) SAFETY FACTOR IS 1.5
6) THE ENGINEER SHALL INCREASE THE ABOVE LENGTHS FOR WORKING PRESSURES GREATER THAN 100 PSI
7) THE ENGINEER SHALL INDIVIDUALLY EVALUATE ALL COMBINED BENDS AND INDICATE THE REQUIRED LENGTHS ON THE PROFILE VIEW.

DECEMBER 2004 | 1.4.1-8

STAFFORD COUNTY DEPARTMENT OF UTILITIES | RESTRAINED LENGTHS FOR HORIZONTAL BENDS, DEAD ENDS & VALVES

RESTRAINED LENGTHS-HORIZONTAL BENDS, DEAD ENDS & VALVES
(NOT TO SCALE) C-504 (A1)

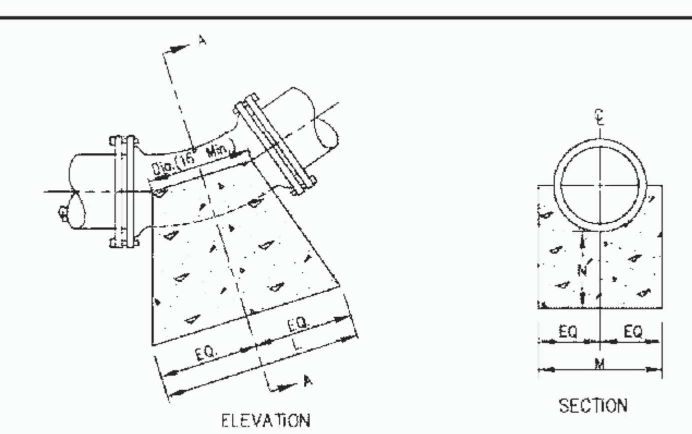

BEND		SIZE 3"	4"	6"	8"	10"	12"	16"	20"	24"	30"
11-1/4°	L	6"	6"	6"	8"	8"	8"	1'-1"	1'-5"	1'-10"	2'-8"
	M	1'-0"	1'-0"	1'-2"	1'-4"	1'-6"	2'-0"	2'-4"	2'-8"	3'-0"	3'-4"
	N	8"	8"	8"	8"	8"	8"	9"	10"	12"	1'-2"
22-1/2°	L	6"	6"	10"	11"	1'-3"	1'-4"	2'-1"	2'-9"	3'-7"	3'-3"
	M	1'-0"	1'-0"	1'-2"	1'-4"	1'-6"	2'-0"	2'-4"	2'-8"	3'-0"	3'-2"
	N	8"	8"	8"	8"	9"	9"	12"	1'-2"	1'-4"	1'-6"
45°	L	10"	1'-0"	1'-2"	1'-9"	2'-5"	2'-8"	4'-0"	5'-6"	6'-0"	8'-2"
	M	1'-0"	1'-0"	1'-2"	1'-4"	1'-6"	2'-0"	2'-4"	2'-8"	3'-6"	4'-0"
	N	8"	8"	8"	8"	12"	1'-2"	1'-6"	2'-0"	2'-6"	3'-0"

BUTTRESS FOR LOWER VERTICAL BENDS

NOTES:

1. Fc = 3000 PSI AT 28 DAYS.
2. CARRY ALL BEARING SURFACES TO UNDISTURBED EARTH OR FIRM SUBGRADE.
3. THE BUTTRESS DIMENSIONS ARE BASED ON THE WATER PRESSURE OF 150 PSI AND SOIL BEARING PRESSURE OF 2500 PSI. WHERE THE WATER PRESSURE AND SOIL BEARING PRESSURE ARE DIFFERENT, THE AREA OF CONCRETE BLOCK (I.E. L & M) SHALL BE PROPORTIONED ACCORDINGLY. AREA ADJUSTMENT FOR REQUIRED PRESSURE SHALL BE MADE FIRST BEFORE MAKING ADJUSTMENT FOR SOIL BEARING PRESSURE.
4. THRUST BLOCKS SHALL BE INSTALLED ONLY WHERE APPROVED BY THE DEPARTMENT OF UTILITIES.

DECEMBER 2004 | 1.4.1-7

STAFFORD COUNTY DEPARTMENT OF UTILITIES | BUTTRESS FOR 11-1/4°, 22-1/2°, & 45° LOWER VERT. BENDS

BUTTRESS FOR LOWER VERTICAL BENDS
(NOT TO SCALE) C-504 (A2)

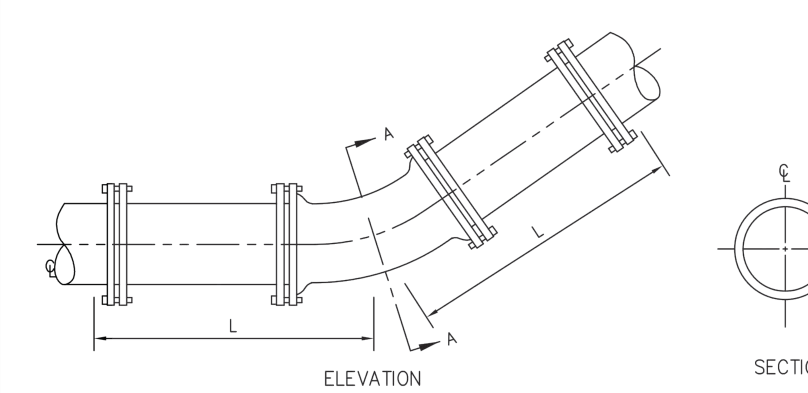

L : RESTRAINED LENGTHS FOR PVC AND POLYWRAPPED PIPES (FEET)											
DIAMETER OF PIPE	3"	4"	6"	8"	10"	12"	16"	18"	20"	24"	30"
11 1/4° LOWER VERT. BEND	6'	7'	11'	14'	17'	20'	26'	29'	32'	37'	45'
22 1/2° LOWER VERT. BEND	12'	15'	22'	28'	34'	40'	52'	58'	64'	75'	91'
45° LOWER VERT. BEND	26'	31'	45'	58'	71'	84'	108'	121'	133'	156'	190'

L : RESTRAINED LENGTHS FOR BARE DUCTILE IRON PIPES (FEET)											
DIAMETER OF PIPE	3"	4"	6"	8"	10"	12"	16"	18"	20"	24"	30"
11 1/4° LOWER VERT. BEND	4'	5'	7'	10'	12'	14'	18'	20'	22'	26'	32'
22 1/2° LOWER VERT. BEND	9'	11'	15'	20'	24'	28'	36'	41'	45'	53'	64'
45° LOWER VERT. BEND	18'	22'	31'	41'	50'	59'	76'	84'	93'	109'	133'

1) SOIL DESIGNATION IS COHESIVE GRANULAR
2) MINIMUM DEPTH OF COVER IS 3.5 FT.
3) USE TYPE 3 LAYING CONDITIONS.
4) DESIGN PRESSURE IS 100 PSI WORKING PRESSURE + 120 PSI SURGE ALLOWANCE
5) SAFETY FACTOR IS 1.5
6) THE ENGINEER SHALL INCREASE THE ABOVE LENGTHS FOR WORKING PRESSURES GREATER THAN 100 PSI
7) THE ENGINEER SHALL INDIVIDUALLY EVALUATE ALL COMBINED BENDS AND INDICATE THE REQUIRED LENGTHS ON THE PROFILE VIEW.

DECEMBER 2004 | 1.4.1-10

STAFFORD COUNTY DEPARTMENT OF UTILITIES | RESTRAINED LENGTHS FOR 11-1/4°, 22-1/2°, & 45° LOWER VERT. BENDS

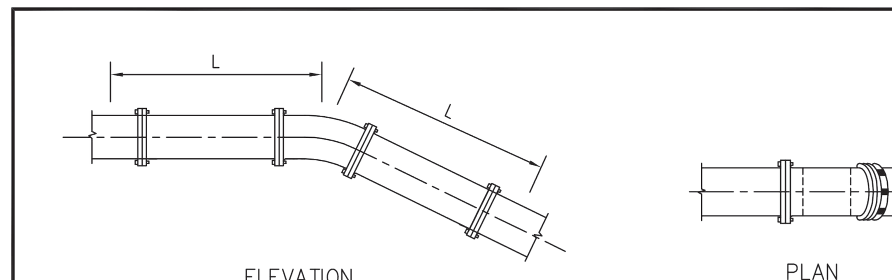

L : RESTRAINED LENGTHS FOR PVC AND POLYWRAPPED PIPES (FEET)											
DIAMETER OF PIPE	3"	4"	6"	8"	10"	12"	16"	18"	20"	24"	30"
11 1/4° UPPER VERT. BEND	2'	3'	4'	5'	6'	7'	9'	10'	11'	12'	15'
22 1/2° UPPER VERT. BEND	4'	5'	7'	10'	12'	14'	18'	20'	21'	25'	30'
45° UPPER VERT. BEND	9'	11'	15'	20'	24'	28'	37'	41'	45'	52'	63'

L : RESTRAINED LENGTHS FOR BARE DUCTILE IRON PIPES (FEET)											
DIAMETER OF PIPE	3"	4"	6"	8"	10"	12"	16"	18"	20"	24"	30"
11 1/4° UPPER VERT. BEND	2'	2'	3'	4'	5'	6'	8'	8'	9'	11'	13'
22 1/2° UPPER VERT. BEND	4'	5'	6'	8'	10'	12'	15'	17'	19'	22'	26'
45° UPPER VERT. BEND	8'	9'	13'	17'	21'	25'	32'	36'	39'	46'	55'

1) SOIL DESIGNATION IS COHESIVE GRANULAR
2) MINIMUM DEPTH OF COVER IS 3.5 FT.
3) USE TYPE 3 LAYING CONDITIONS.
4) DESIGN PRESSURE IS 100 PSI WORKING PRESSURE + 120 PSI SURGE ALLOWANCE
5) SAFETY FACTOR IS 1.5
6) THE ENGINEER SHALL INCREASE THE ABOVE LENGTHS FOR WORKING PRESSURES GREATER THAN 100 PSI
7) THE ENGINEER SHALL INDIVIDUALLY EVALUATE ALL COMBINED BENDS AND INDICATE THE REQUIRED LENGTHS ON THE PROFILE VIEW.

DECEMBER 2004 | 1.4.1-9

STAFFORD COUNTY DEPARTMENT OF UTILITIES | RESTRAINED LENGTHS FOR 11 1/4°, 22 1/2° & 45° UPPER VERT. BENDS

WATERMAIN VERTICAL BEND DETAIL
(NOT TO SCALE) C-504 (A4)

SYM | DESCRIPTION | DATE | APPR

NAVFAC

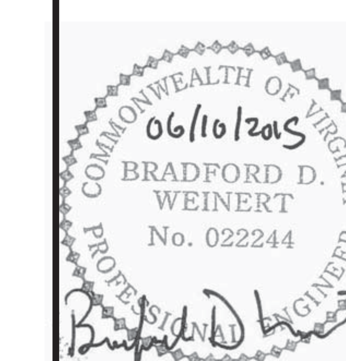

SEAL

JACOBS
1100 NORTH GLEBE ROAD SUITE 500
ARLINGTON, VIRGINIA 22201
TEL (571) 218-1000 FAX (571) 218-1600
A/E INFO

APPROVED
FOR COMMANDER NAVFAC
ACTIVITY
SATISFACTORY TO DATE 18 May 2015
DES HR | DRW HR | CHK RC
<<PM/DM>>
BRANCH MANAGER MS
CHIEF ENG/ARCH THC
FIRE PROTECTION KTD

DEPARTMENT OF THE NAVY
NAVAL FACILITIES ENGINEERING COMMAND
NAVAL FACILITIES ENGINEERING COMMAND
MARINE CORPS BASE - QUANTICO
QUANTICO, VA
P-635 ASP EXPANSION
WATER SYSTEM DETAILS

SCALE: AS NOTED
EPROJECT NO.: 1312142
CONSTR. CONTR. NO.
NAVFAC DRAWING NO. 13072306
SHEET 90 OF 201
C-504
DRAWFORM REVISION: 10 MARCH 2009

FILE NAME: C:\pwworking\gbna\crowlera\d0751223\NAVFAC_P635C-504.dwg LAYOUT NAME: C-504 PLOTTED: Wednesday, June 10, 2015 - 4:02pm USER: crowlera

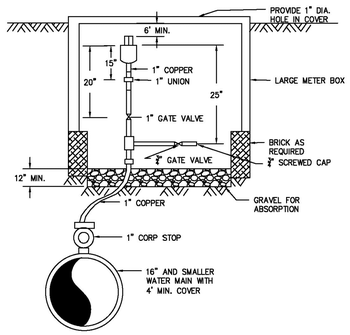

NOTES:
A. ALL COPPER FITTINGS WILL BE COMPRESSION TYPE.
B. SADDLE MUST BE USED IF TAP IS MADE IN PVC MAIN.

DECEMBER 2004 | 2.3.1–1

STAFFORD COUNTY DEPARTMENT OF UTILITIES | 1" AIR RELEASE VALVE

AIR RELEASE VALVE DETAIL
(NOT TO SCALE) C-505 (C1)

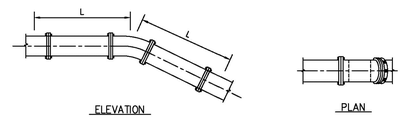

L : RESTRAINED LENGTHS FOR PVC AND POLYWRAPPED PIPES (FEET)										
DIAMETER OF PIPE	3"	4"	6"	8"	10"	12"	16"	18"	20"	24"	30"
11 1/4° UPPER VERT. BEND	2'	3'	4'	5'	6'	7'	9'	10'	11'	12'	15'
22 1/2° UPPER VERT. BEND	4'	5'	7'	10'	12'	14'	18'	20'	21'	25'	30'
45° UPPER VERT. BEND	9'	11'	15'	20'	24'	28'	37'	41'	45'	52'	63'

L : RESTRAINED LENGTHS FOR BARE DUCTILE IRON PIPES (FEET)											
DIAMETER OF PIPE	3"	4"	6"	8"	10"	12"	16"	18"	20"	24"	30"
11 1/4° UPPER VERT. BEND	2'	2'	3'	4'	5'	6'	8'	8'	9'	11'	13'
22 1/2° UPPER VERT. BEND	4'	5'	6'	8'	10'	12'	15'	17'	19'	22'	26'
45° UPPER VERT. BEND	8'	9'	13'	17'	21'	25'	32'	36'	39'	46'	55'

DECEMBER 2004 | 1.4.1–9

STAFFORD COUNTY DEPARTMENT OF UTILITIES | RESTRAINED LENGTHS FOR 11 1/4°, 22 1/2° & 45° UPPER VERT. BENDS

RESTRAINED LENGTHS FOR UPPER VERTICAL BENDS
(NOT TO SCALE) C-505 (C2)

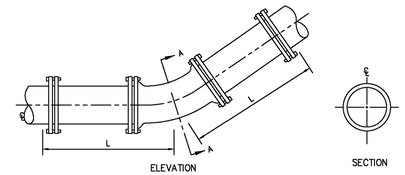

1) SOIL DESIGNATION IS COHESIVE GRANULAR
2) MINIMUM DEPTH OF COVER IS 3.5 FT.
3) USE TYPE 3 LAYING CONDITIONS.
4) DESIGN PRESSURE IS 100 PSI WORKING PRESSURE + 120 PSI SURGE ALLOWANCE
5) SAFETY FACTOR IS 1.5
6) THE ENGINEER SHALL INCREASE THE ABOVE LENGTHS FOR WORKING PRESSURES GREATER THAN 100 PSI
7) THE ENGINEER SHALL INDIVIDUALLY EVALUATE ALL COMBINED BENDS AND INDICATE THE REQUIRED LENGTHS ON THE PROFILE VIEW.

DECEMBER 2004 | 1.4.1–10

STAFFORD COUNTY DEPARTMENT OF UTILITIES | RESTRAINED LENGTHS FOR 11-1/4°, 22-1/2°, & 45° LOWER VERT. BENDS

RESTRAINED LENGTHS FOR LOWER VERTICAL BENDS
(NOT TO SCALE) C-505 (C3)

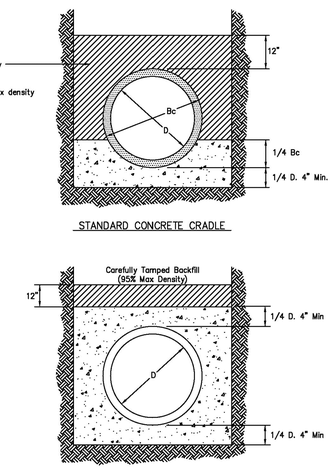

NOTES:
1. Concrete To Be 3000 PSI Unless Otherwise Specified.
2. Trench Width Shall Be As Specified Or As Shown On Plans.

DECEMBER 2004 | 1.4.2–1

STAFFORD COUNTY DEPARTMENT OF UTILITIES | STANDARD CONCRETE CRADLE & ENCASEMENT

STANDARD CONCRETE CRADLE & ENCASEMENT
(NOT TO SCALE) C-505 (C5)

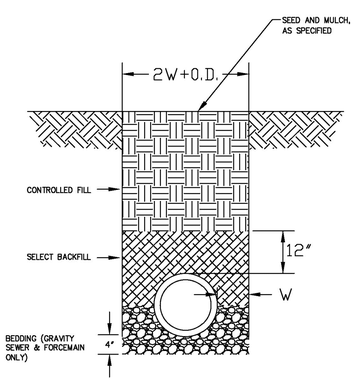

NOTES:
1. CONTROLLED FILL TO BE PLACED ABOVE SELECT FILL.
2. SELECT BACKFILL TO EXTEND 12 INCHES OVER CROWN OF PIPE.
3. DIMENSION "W" SHALL BE A MINIMUM OF 6 INCHES AND MAXIMUM OF 12 INCHES.
4. BEDDING SHALL BE PLACED FOR A MINIMUM OF 4" BELOW BOTTOM OF PIPE TO THE SPRINGLINE OF THE PIPE.

MARCH 2006 | 1.5.2–2

STAFFORD COUNTY DEPARTMENT OF UTILITIES | NON-PAVED TRENCH DETAIL

NON-PAVED TRENCH DETAIL
(NOT TO SCALE) C-505 (A1)

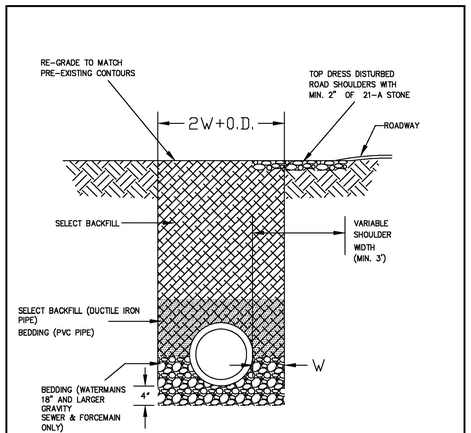

NOTES:
1. SELECT BACKFILL COMPACTED TO 95% DENSITY TO EXTEND TO GRADE.
2. DIMENSION "W" SHALL BE A MINIMUM OF 6 INCHES AND A MAXIMUM OF 12 INCHES.
3. BEDDING TO EXTEND 12" OVER CROWN OF PVC PIPE.
4. BEDDING SHALL BE PLACED FOR A MINIMUM OF 4" BELOW BOTTOM OF PIPE TO THE SPRINGLINE OF THE PIPE.
5. ANY OVEREXCAVATION TO BE BACKFILLED WITH BEDDING MATERIAL.

MARCH 2006 | 1.5.2–1

STAFFORD COUNTY DEPARTMENT OF UTILITIES | TRENCH FOR SHOULDER OF ROAD

TRENCH FOR SHOULDER OF ROAD
(NOT TO SCALE) C-505 (A2)

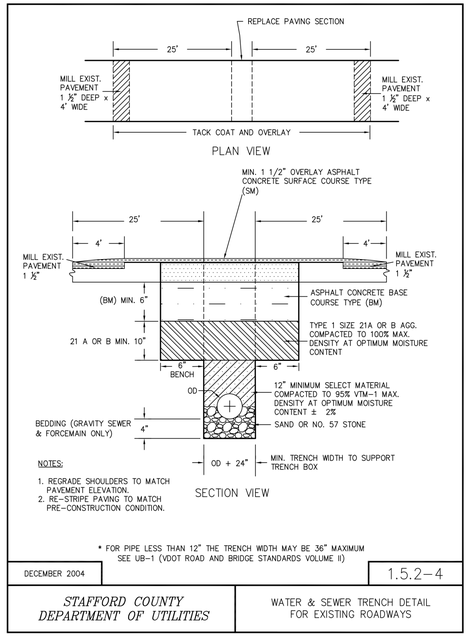

NOTES:
1. REGRADE SHOULDERS TO MATCH PAVEMENT ELEVATION.
2. RE-STRIPE PAVING TO MATCH PRE-CONSTRUCTION CONDITION.

* FOR PIPE LESS THAN 12" THE TRENCH WIDTH MAY BE 36" MAXIMUM SEE UB-1 (VDOT ROAD AND BRIDGE STANDARDS VOLUME II)

DECEMBER 2004 | 1.5.2–4

STAFFORD COUNTY DEPARTMENT OF UTILITIES | WATER & SEWER TRENCH DETAIL FOR EXISTING ROADWAYS

WATERLINE TRENCHING DETAIL FOR EX ROADWAYS
(NOT TO SCALE) C-505 (A3)

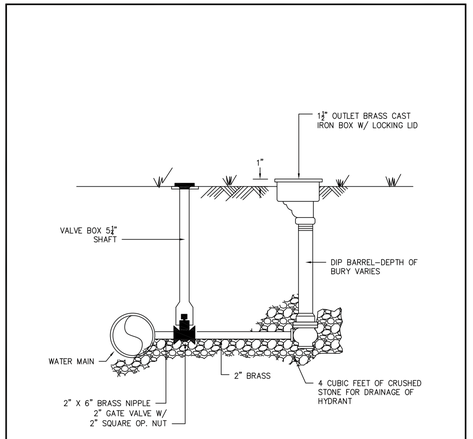

1. FOR DEAD END LINES INSTALL FLUSHING HYDRANT ON RESTRAINED END CAP.

DECEMBER 2004 | 2.4.4–3

STAFFORD COUNTY DEPARTMENT OF UTILITIES | BELOW GRADE FLUSHING HYDRANT

BELOW GRADE FLUSHING HYDRANT
(NOT TO SCALE) C-505 (A5)

SYM	DESCRIPTION	DATE	APPR

NAVFAC

COMMONWEALTH OF VIRGINIA
06/10/2015
BRADFORD D. WEINERT
No. 022244
PROFESSIONAL ENGINEER
SEAL

JACOBS
1100 NORTH GLEBE ROAD SUITE 500
ARLINGTON, VIRGINIA 22201
TEL (571) 218-1000 FAX (571) 218-1600
A/E INFO

APPROVED
FOR COMMANDER NAVFAC 18 May 2015
ACTIVITY
SATISFACTORY TO Signed by e-mail DATE 18 May 2015
DES HR DRW HR CHK RC
<<PM/DM>>
BRANCH MANAGER MS
CHIEF ENG/ARCH THC
FIRE PROTECTION KTD

DEPARTMENT OF THE NAVY
NAVAL FACILITIES ENGINEERING COMMAND
MARINE CORPS BASE – QUANTICO
NAVAL FACILITIES ENGINEERING COMMAND
QUANTICO, VA
P-635 ASP EXPANSION
WATER SYSTEM DETAILS

SCALE: AS NOTED
EPROJECT NO.: 1312142
CONSTR. CONTR. NO.
NAVFAC DRAWING NO. 13072307
SHEET 91 OF 201
C-505
DRAWFORM REVISION: 10 MARCH 2009

FILE NAME: C:\pwworking\ghn\\crowlerc\d0751223\NAVFAC_P635C-505.dwg LAYOUT NAME: C-505 PLOTTED: Wednesday, June 10, 2015 - 4:03pm USER: crowlerc

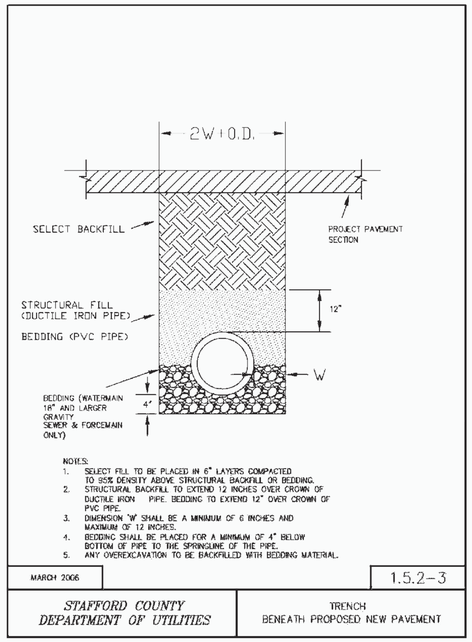

TRENCH BENEATH PROPOSED PAVEMENT (C1)
(NOT TO SCALE) C-506

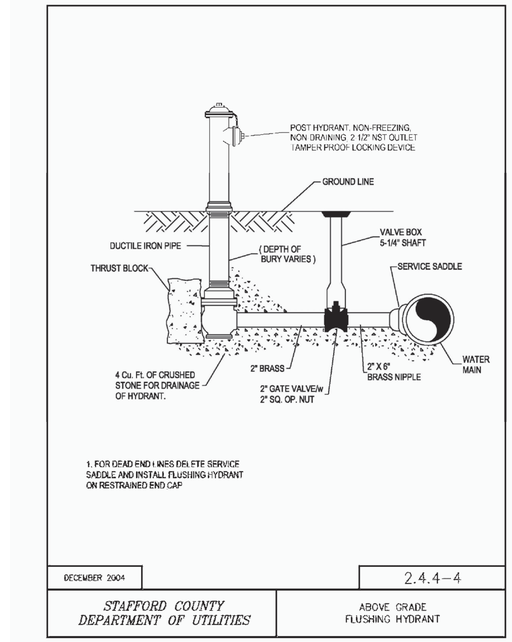

FLUSHING HYDRANT DETAIL (C2)
(NOT TO SCALE) C-506

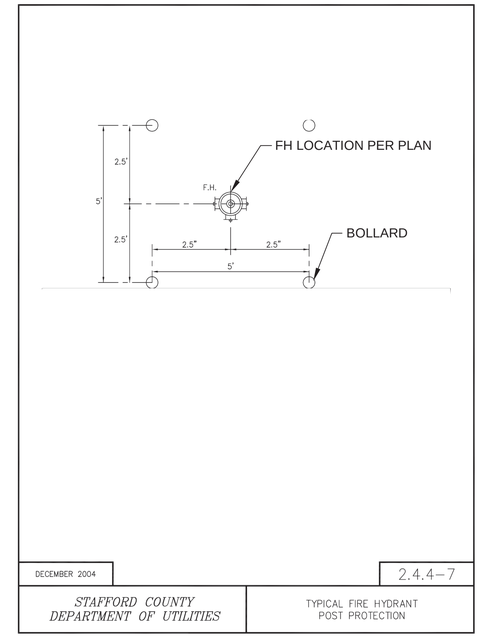

FIRE HYDRANT IN PAVED AREA GUARD POST DETAIL (C5)
(NOT TO SCALE) C-506

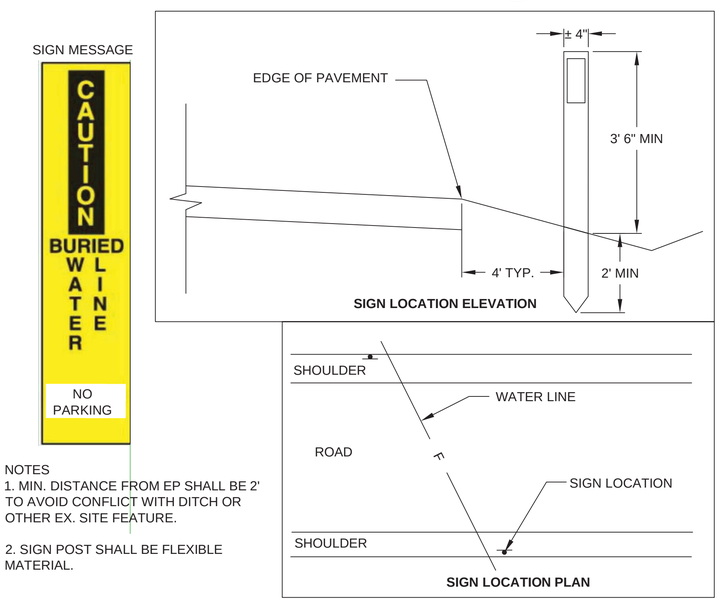

NOTES
1. MIN. DISTANCE FROM EP SHALL BE 2' TO AVOID CONFLICT WITH DITCH OR OTHER EX. SITE FEATURE.

2. SIGN POST SHALL BE FLEXIBLE MATERIAL.

WATER MAN ROAD CROSSING SIGN (A1)
(NOT TO SCALE) C-506

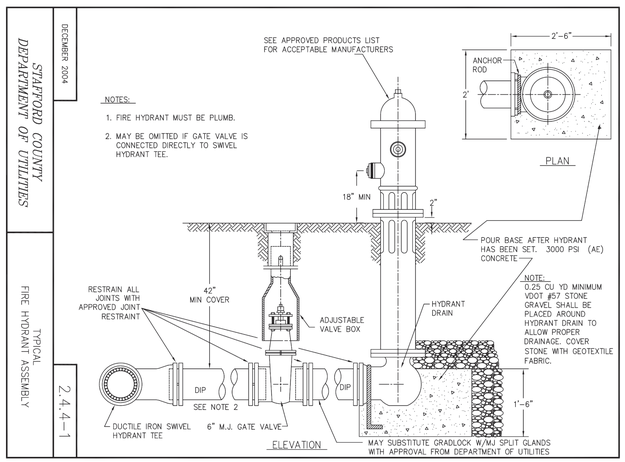

FIRE HYDRANT ASSEMBLY DETAIL (A3)
(NOT TO SCALE) C-506

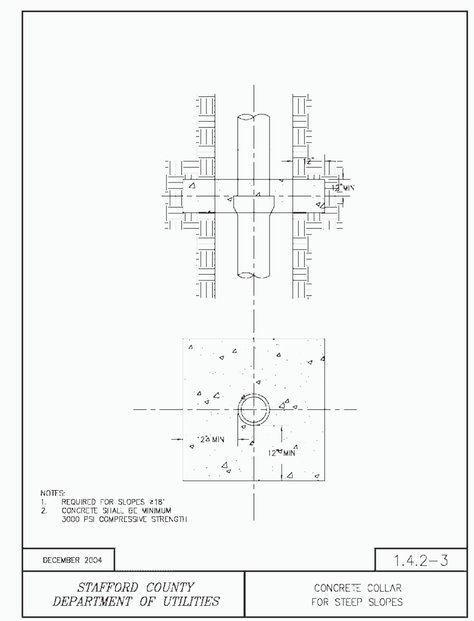

UTILITY DETAILS - DOMESTIC AND FIRE PROTECTION WATER SUPPLY (A5)
(NOT TO SCALE) C-506

SYM	DESCRIPTION	DATE	APPR

NAVFAC

COMMONWEALTH OF VIRGINIA
06/10/2015
BRADFORD D. WEINERT
No. 022244
PROFESSIONAL ENGINEER
SEAL

JACOBS
1100 NORTH GLEBE ROAD SUITE 500
ARLINGTON, VIRGINIA 22201
TEL (571) 218-1000 FAX (571) 218-1600
A/E INFO

APPROVED
FOR COMMANDER NAVFAC
ACTIVITY
SATISFACTORY TO DATE 15 May 2015
DES HR DRW HR CHK RC
<CPM/DM>>
BRANCH MANAGER MS
CHIEF ENG/ARCH THC
FIRE PROTECTION KTD

DEPARTMENT OF THE NAVY
NAVAL FACILITIES ENGINEERING COMMAND
NAVAL FACILITIES ENGINEERING COMMAND
MARINE CORPS BASE – QUANTICO
QUANTICO, VA
P-635 ASP EXPANSION
WATER SYSTEM DETAILS

SCALE: AS NOTED
EPROJECT NO.: 1312142
CONSTR. CONTR. NO.
NAVFAC DRAWING NO. 13072308
SHEET 92 OF 201
C-506
DRAWFORM REVISION: 10 MARCH 2009

FILE NAME: C:\pwworking\ghnd\crowlero\d0751223\NAVFAC_P635C-506.dwg LAYOUT NAME: C-506 PLOTTED: Wednesday, June 10, 2015 - 4:04pm USER: crowlero

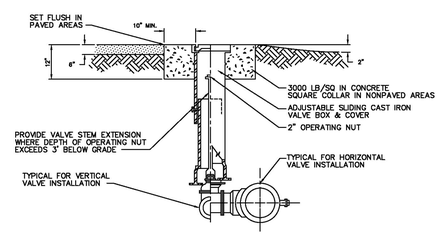

DECEMBER 2004 | 2.4.5–1

STAFFORD COUNTY DEPARTMENT OF UTILITIES | TYPICAL VALVE AND VALVE BOX

VALVE BOX DETAIL
(NOT TO SCALE) C–507 C1

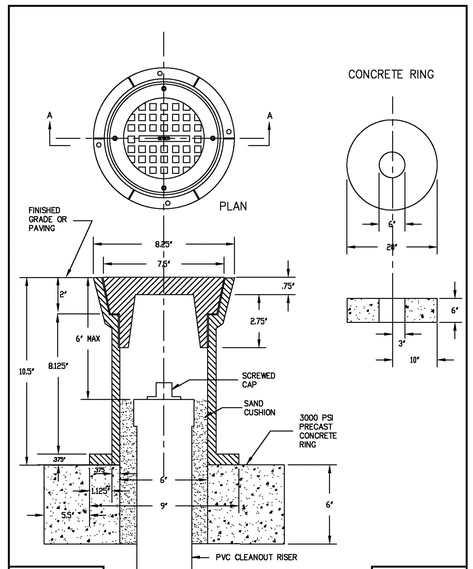

DECEMBER 2004 | 3.3.3–3

STAFFORD COUNTY DEPARTMENT OF UTILITIES | CLEANOUT COVER ASSEMBLY FOR 4" CLEANOUTS

SANITARY SEWER CLEANOUT
(NOT TO SCALE) C–507 A5

SYM	DESCRIPTION	DATE	APPR

NAVFAC

COMMONWEALTH OF VIRGINIA
06/10/2015
BRADFORD D. WEINERT
No. 022244
PROFESSIONAL ENGINEER
SEAL

JACOBS
1100 NORTH GLEBE ROAD SUITE 500
ARLINGTON, VIRGINIA 22201
TEL (571) 218-1000 FAX (571) 218-1600
A/E INFO

APPROVED
FOR COMMANDER NAVFAC 15 May 2015
ACTIVITY
SATISFACTORY TO DATE 15 May 2015

DES	DRW	CHK
HR	HR	RC

<<PM/DM>>
BRANCH MANAGER MS
CHIEF ENG/ARCH THC
FIRE PROTECTION KTD

DEPARTMENT OF THE NAVY
NAVAL FACILITIES ENGINEERING COMMAND
NAVAL FACILITIES ENGINEERING COMMAND
MARINE CORPS BASE – QUANTICO
QUANTICO, VA
P-635 ASP EXPANSION
WATER AND SANITARY SYSTEM DETAILS

SCALE: AS NOTED
EPROJECT NO.: 1312142
CONSTR. CONTR. NO.
NAVFAC DRAWING NO. 13072309
SHEET 93 OF 201
C-507
DRAWFORM REVISION: 10 MARCH 2009

FILE NAME: C:\pwworking\gbno\crowlero\d0751223\NAVFAC_P635C-507.dwg LAYOUT NAME: C-507 PLOTTED: Wednesday, June 10, 2015 - 4:04pm USER: crowlero

EW-1, 1 APC

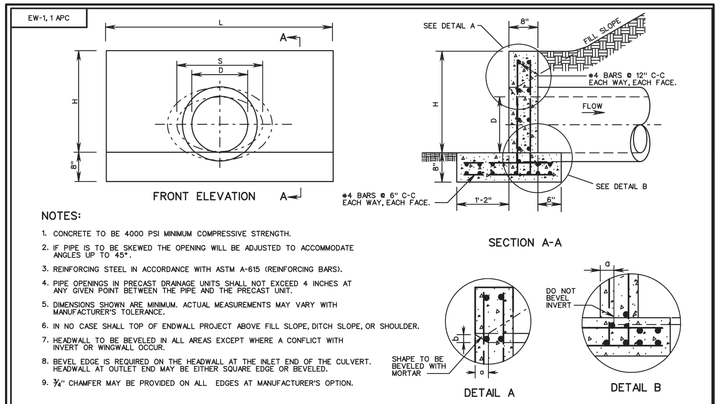

NOTES:

1. CONCRETE TO BE 4000 PSI MINIMUM COMPRESSIVE STRENGTH.
2. IF PIPE IS TO BE SKEWED THE OPENING WILL BE ADJUSTED TO ACCOMMODATE ANGLES UP TO 45°.
3. REINFORCING STEEL IN ACCORDANCE WITH ASTM A-615 (REINFORCING BARS).
4. PIPE OPENINGS IN PRECAST DRAINAGE UNITS SHALL NOT EXCEED 4 INCHES AT ANY GIVEN POINT BETWEEN THE PIPE AND THE PRECAST UNIT.
5. DIMENSIONS SHOWN ARE MINIMUM. ACTUAL MEASUREMENTS MAY VARY WITH MANUFACTURER'S TOLERANCE.
6. IN NO CASE SHALL TOP OF ENDWALL PROJECT ABOVE FILL SLOPE, DITCH SLOPE, OR SHOULDER.
7. HEADWALL TO BE BEVELED IN ALL AREAS EXCEPT WHERE A CONFLICT WITH INVERT OR WINGWALL OCCUR.
8. BEVEL EDGE IS REQUIRED ON THE HEADWALL AT THE INLET END OF THE CULVERT. HEADWALL AT OUTLET END MAY BE EITHER SQUARE EDGE OR BEVELED.
9. ¾" CHAMFER MAY BE PROVIDED ON ALL EDGES AT MANUFACTURER'S OPTION.

EW-1PC

ENDWALL FOR CIRCULAR PIPE

DIAMETER OF PIPE CULVERT						
D	12"	15"	18"	21" OR 24"	27" OR 30"	33" OR 36"
H	2'-0"	2'-3"	2'-6"	3'-2"	3'-10"	4'-4"
L	4'-0"	5'-0"	6'-0"	8'-0"	10'-0"	12'-0"
a	0'-1¼"	0'-1¾"	0'-2"	0'-2½"	0'-3¼"	0'-3¾"
b	0'-1"	0'-1¼"	0'-1½"	0'-2"	0'-2½"	0'-3"

EW-1APC

ENDWALL FOR ELLIPTICAL PIPE

SIZE OF ELLIPTICAL PIPE CULVERT (SPAN x RISE)								
S x D	23" x 14"	30" x 19"	34" x 22"	38" x 24"	42" x 27"	45" x 29"	49" x 32"	53" x 34"
H	1'-10"	2'-4"	2'-7"	2'-9"	3'-1"	3'-3"	3'-6"	3'-8"
L	5'-5"	7'-2"	8'-6"	9'-2"	10'-2"	10'-11"	12'-1"	12'-11"
a	0'-2½"	0'-3¼"	0'-3½"	0'-4"	0'-4½"	0'-4¾"	0'-5"	0'-5½"
b	0'-2"	0'-2½"	0'-2¾"	0'-3"	0'-3½"	0'-3¾"	0'-4"	0'-4½"

VDOT ROAD AND BRIDGE STANDARDS

PRECAST ENDWALL FOR PIPE CULVERTS
12" - 36" CIRCULAR AND 23" x 14" - 53" x 34" ELLIPTICAL PIPES
VIRGINIA DEPARTMENT OF TRANSPORTATION

SHEET 1 OF 1 | 101.02 | REVISION DATE | SPECIFICATION REFERENCE 105 302

VDOT STD. EW-1
(NOT TO SCALE) C-508 C3

SL-1

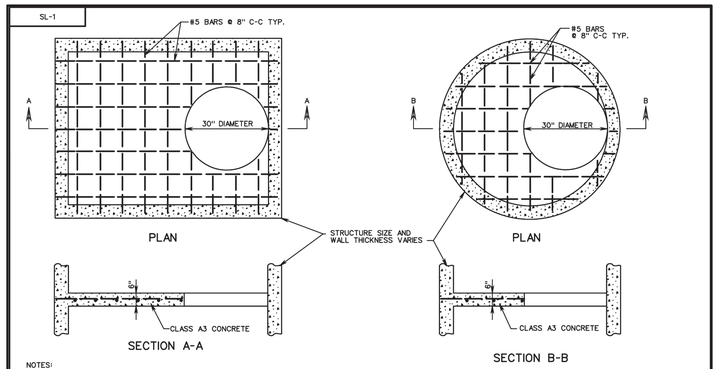

NOTES:

1. THE STANDARD SAFETY SLAB (SL-1) IS TO BE USED ONLY WHEN SPECIFIED IN THE PLANS ON THE DRAINAGE SUMMARY SHEET AND/OR THE DRAINAGE DESCRIPTION. FOR MANHOLES, JUNCTION BOXES, AND DROP INLETS WITH HEIGHTS GREATER THAN 12 FEET, THE SPACING OF ADJACENT SAFETY SLABS SHALL BE 8' TO 12' WITH NO SAFETY SLAB LOCATED WITHIN 6 FEET OF THE TOP OR BOTTOM OF THE STRUCTURE. SAFETY SLABS SHALL NOT BE LOCATED BELOW ANY INLET PIPE OF 30" DIAMETER OR GREATER.
2. THE COST OF THE SL-1 IS INCLUDED IN THE COST OF THE STRUCTURE.
3. ACCESS OPENINGS ARE TO BE STAGGERED FROM ONE SIDE OF STRUCTURE TO THE OTHER WHERE APPLICABLE. STEPS ARE TO BE STAGGERED ACCORDINGLY.
4. SAFETY SLAB MAY BE CAST-IN-PLACE OR PRECAST. CAST-IN-PLACE CONCRETE TO BE CLASS A3 (3000 PSI). PRECAST CONCRETE IS TO BE A4 (4000 PSI). REINFORCING STEEL TO BE IN ACCORDANCE WITH AASHTO M31.
5. ACCESS OPENINGS MAY BE 30" DIAMETER OR 30" SQUARE. WHEN STRUCTURE WIDTH IS LESS THAN 30" THE ACCESS OPENING SHALL BE RECTANGULAR (STRUCTURE WIDTH BY 30" LONG).

SEE CAST IN PLACE DRAWINGS FOR FURTHER DETAILS

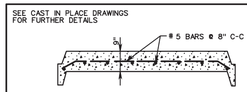

TYPICAL PRECAST UNIT

VDOT ROAD AND BRIDGE STANDARDS

TYPICAL CONCRETE SAFETY SLAB FOR DROP INLETS, MANHOLES AND JUNCTION BOXES
VIRGINIA DEPARTMENT OF TRANSPORTATION

SHEET 1 OF 1 | 106.14 | REVISION DATE | SPECIFICATION REFERENCE 302

VDOT STD. SL-1
(NOT TO SCALE) C-508 C5

T-DI-5

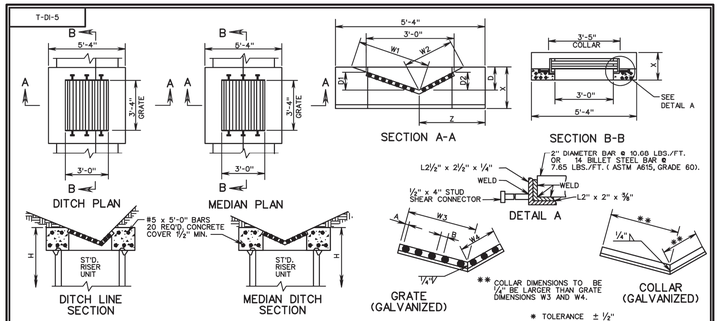

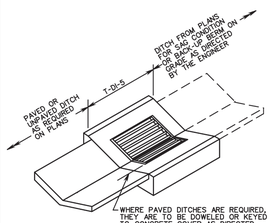

GRATE BAR SPACING CHART

GRATE TYPE	MAXIMUM DIMENSION a	MAXIMUM DIMENSION b
A I	11/2"	3"
A III	1"	1"

ST'D PG-2 TYPE	COVER DIMENSIONS AND QUANTITIES								
	W1	W2	W3	W4	D*	D1	D2	X	Z
A1,A2,A3	3'-0½"	2'-0⅛"	2'-0⅝"	1'-0⅜"	6"	4"	3"	14"	2'-2"
B1,B2,B3,B4, C1,C2,C3	2'-9"	2'-9"	1'-6⅝"	1'-6⅝"	8"	4½"	4½"	16"	2'-8"
E	2'-3"	2'-3"	1'-8⅛"	1'-8⅛"	12"	9"	9"	19"	2'-8"

NOTES:

1. SEE GENERAL NOTES-PRECAST FOR ADDITIONAL DETAILS.
2. CONCRETE SHALL BE 4000 PSI MINIMUM.
3. REINFORCING STEEL SHALL BE IN ACCORDANCE WITH ASTM-A 615.
4. CONCRETE COVER AND GRATE ARE TO BE FURNISHED AS A SINGLE UNIT.
5. DIMENSIONS SHOWN ARE MINIMUM. ACTUAL DIMENSIONS MAY VARY WITH MANUFACTURER.
6. GRATE BARS ARE TO BE INSTALLED SO THEY WILL BE ALIGNED PARALLEL TO THE DITCH FLOW.
7. WHERE DITCH SLOPES DO NOT MATCH THOSE OF INLET COVER, THE AREA ADJACENT TO THE INLET IS TO BE GRADED TO PROVIDE A SMOOTH TRANSITION.
8. DI-5 IS TO BE UTILIZED IN LOCATIONS NOT NORMALLY SUBJECT TO TRAFFIC.

VDOT ROAD AND BRIDGE STANDARDS

STANDARD PRECAST TOP UNITS
VIRGINIA DEPARTMENT OF TRANSPORTATION

SHEET 1 OF 1 | 103.07 | REVISION DATE | SPECIFICATION REFERENCE 105 233 302

VDOT STD. T-DI-5
(NOT TO SCALE) C-508 A3

T-DI-1

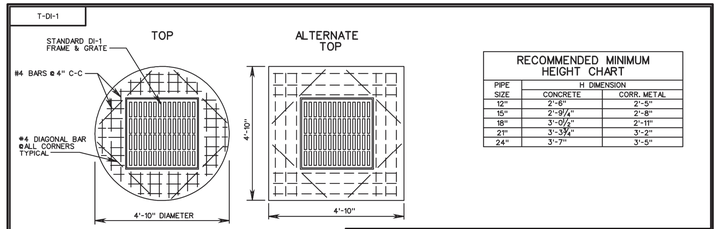

RECOMMENDED MINIMUM HEIGHT CHART

PIPE SIZE	H DIMENSION CONCRETE	H DIMENSION CORR. METAL
12"	2'-6"	2'-5"
15"	2'-9¼"	2'-8"
18"	3'-0½"	2'-11"
21"	3'-3¾"	3'-2"
24"	3'-7"	3'-5"

DI-1, 1A PC

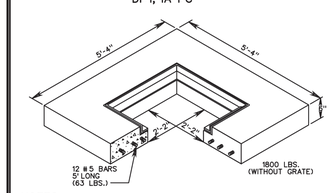

NOTES:

1. SEE GENERAL NOTES PRECAST FOR ADDITIONAL DETAILS.
2. CONCRETE TO BE 4000 PSI MINIMUM.
3. REINFORCING STEEL IN ACCORDANCE WITH ASTM C-478, ASTM A-497 (WIRE FABRIC) AND ASTM A-615 (REINFORCING BARS).
4. CONCRETE COVER AND GRATE ARE TO BE FURNISHED AS A SINGLE UNIT.
5. SEE STANDARD DI-1, 1A FOR DETAILS OF FRAME AND GRATE.
6. DIMENSIONS SHOWN ARE MINIMUM. ACTUAL DIMENSIONS MAY VARY WITH MANUFACTURER.

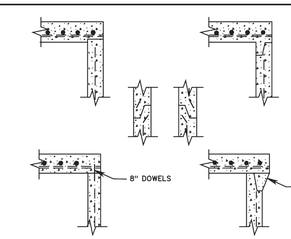

NOTES:

1. TONGUE AND GROOVE JOINT TO BE OF FABRICATOR'S DESIGN MEETING THE APPROVAL OF THE ENGINEER. JOINTS ARE TO BE SEALED WITH MORTAR, OR O-RING GASKETS OR BUTYL RUBBER.
2. ALTERNATE JOINT DETAILS APPLY TO ALL PRECAST UNITS.

ALTERNATE JOINT DETAILS

VDOT ROAD AND BRIDGE STANDARDS

STANDARD PRECAST TOP UNITS
VIRGINIA DEPARTMENT OF TRANSPORTATION

SHEET 1 OF 1 | 103.03 | REVISION DATE | SPECIFICATION REFERENCE 105 233 302

VDOT STD. T-DI-1
(NOT TO SCALE) C-508 A5

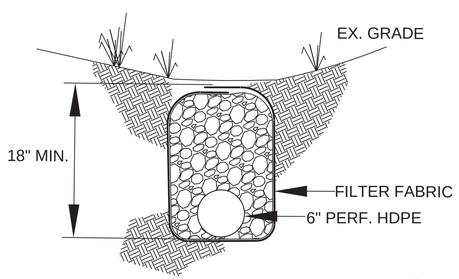

PERFORATED HDPE UNDERDRAIN A3
CG505

APPR.	DATE	DESCRIPTION	SYM

NAVFAC

COMMONWEALTH OF VIRGINIA 06/10/2015 BRADFORD D. WEINERT No. 022244 PROFESSIONAL ENGINEER

SEAL

JACOBS
1100 NORTH GLEBE ROAD SUITE 500
ARLINGTON, VIRGINIA 22201
TEL (571) 218-1500 FAX (571) 218-1600
A/E INFO

APPROVED
FOR COMMANDER NAVFAC 15 May 2015
ACTIVITY
SATISFACTORY TO 5 Pgs by email DATE 15 May 2015
DES HR DRW HR CHK RC
<<PM/DM>>
BRANCH MANAGER MS
CHIEF ENG/ARCH THC
FIRE PROTECTION KTD

DEPARTMENT OF THE NAVY
NAVAL FACILITIES ENGINEERING COMMAND
NAVAL FACILITIES ENGINEERING COMMAND
MARINE CORPS BASE – QUANTICO
QUANTICO, VA
P-635 ASP EXPANSION
STORM SEWER DETAILS

SCALE: AS NOTED
EPROJECT NO.: 1312142
CONSTR. CONTR. NO.
NAVFAC DRAWING NO. 13072310
SHEET 94 OF 201
C-508

DRAWFORM REVISION: 10 MARCH 2009

FILE NAME: C:\pwworking\dbna\crowlera\d0751223\NAVFAC_P635C-508.dwg LAYOUT NAME: C-513 PLOTTED: Wednesday, June 10, 2015 - 4:04pm USER: crowlera