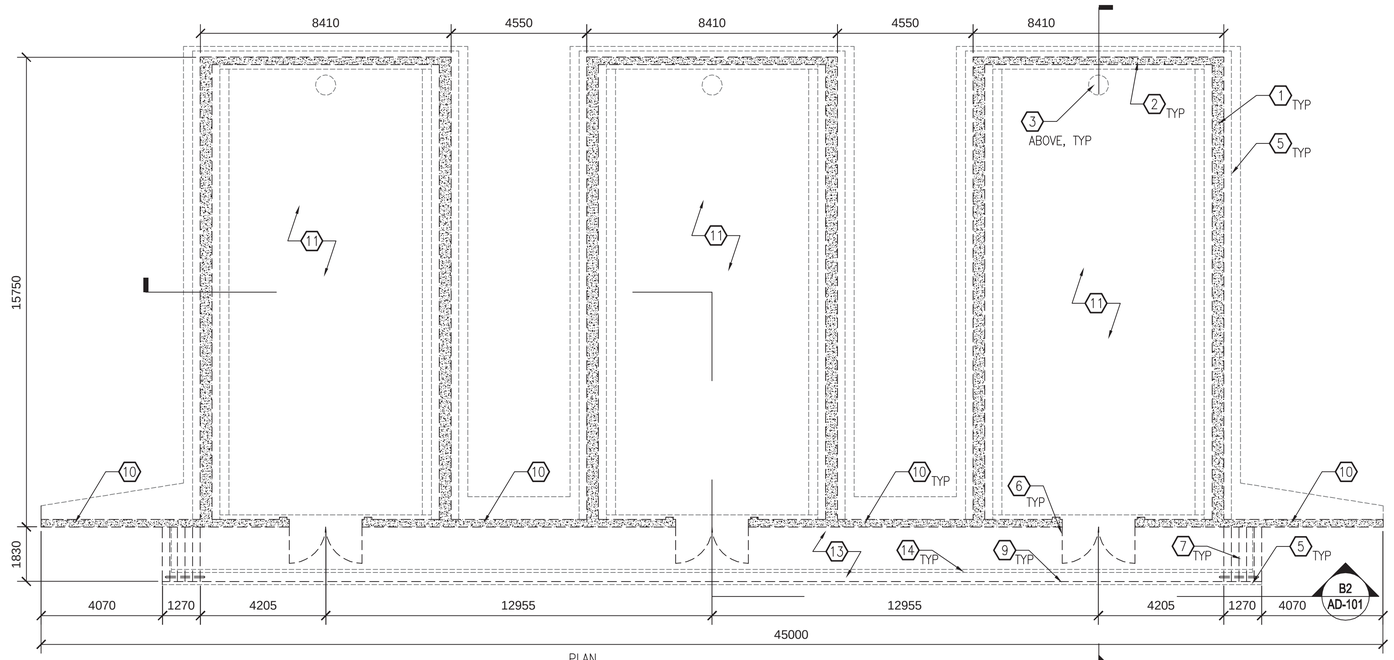

MAGAZINE - DEMOLITION 27167-27169 PLAN

SCALE: 1:100 AD-101 C2

PLAN NORTH

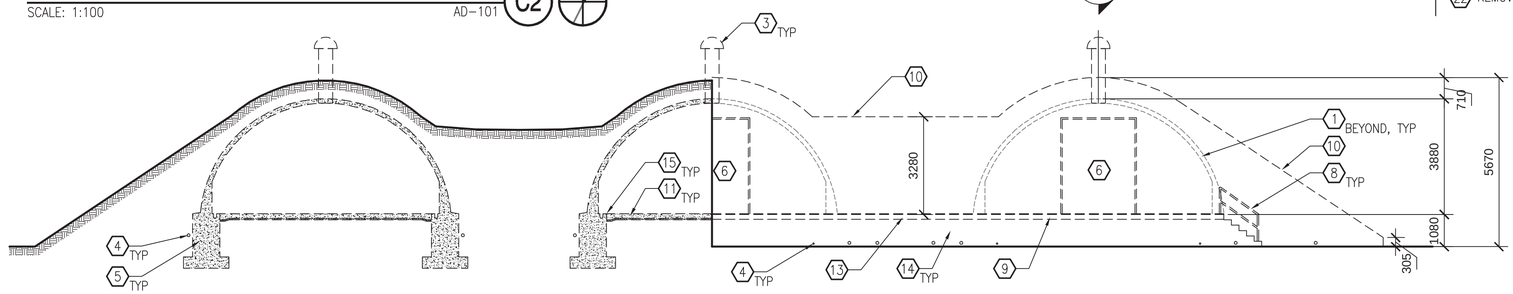

MAGAZINE - DEMOLITION 27167-27169 SECTION

SCALE: 1:100 AD-101 B2

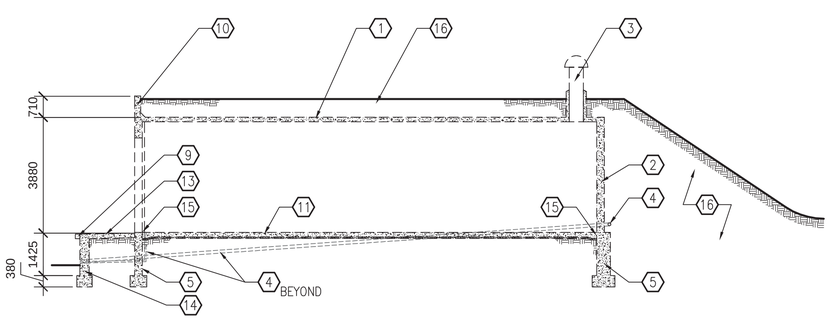

MAGAZINE - DEMOLITION 27167-27169 SECTION

SCALE: 1:100 AD-101 A2

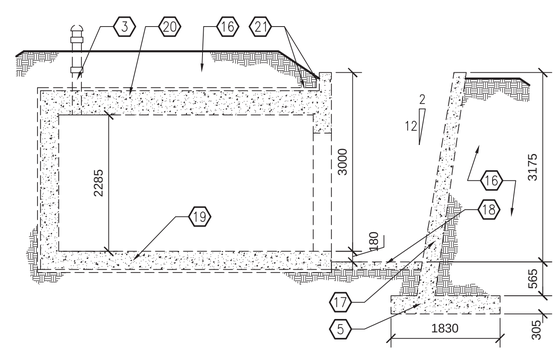

MAGAZINE - DEMOLITION 27121 & 27120 SECTION

SCALE: 1:50 AD-101 A4

0 1000 2000 4000 MILLIMETER
SCALE: 1:100

0 500 1000 2000 MILLIMETER
SCALE: 1:50

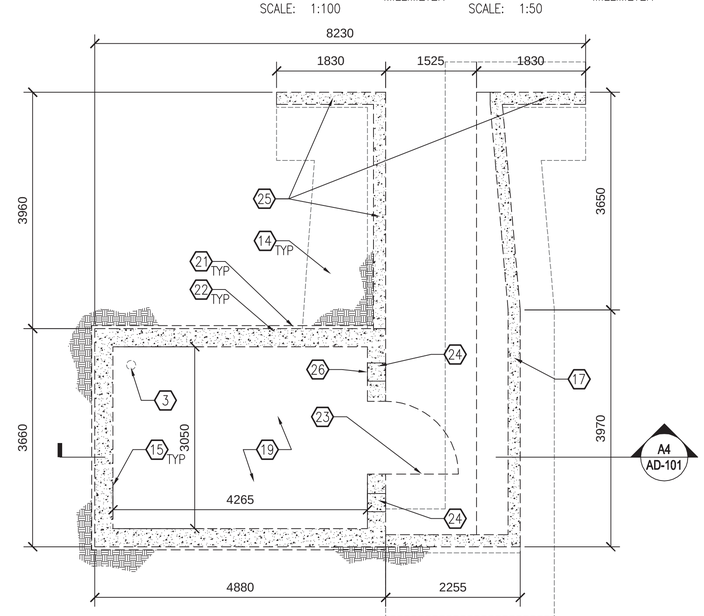

MAGAZINE - DEMOLITION 27121 & 27120 PLAN

SCALE: 1:50 AD-101 A5

PLAN NORTH

KEY NOTES

1. REMOVE CONCRETE VAULT WALL (THICKNESS VARIES – 150mm–400mm), WATER PROOF MEMBRANE AND PROTECTION BOARD
2. REMOVE CONCRETE WALL (250mm), WATER PROOF MEMBRANE AND PROTECTION BOARD
3. REMOVE VENTILATOR AND DAMPER EQUIPMENT
4. REMOVE FOUNDATION DRAINAGE SYSTEM
5. REMOVE CONCRETE FOUNDATION WALL WATER PROOF MEMBRANE, PROTECTION BOARD AND FOOTING
6. REMOVE DOUBLE STEEL DOORS 1220mm X 3150mm, FRAME AND ANCHORING SYSTEM
7. REMOVE CONCRETE STAIR AND STAIR FOOTING
8. REMOVE GUARDRAIL SYSTEM
9. REMOVE 150mm X 150mm RUBBER BUMPER, APPROX. 30
10. REMOVE CONCRETE RETAINING WALL (300mm TOP, 400mm BASE)
11. REMOVE 150mm CONCRETE SLAB, WATER PROOFING MEMBRANE AND 75mm CONCRETE BASE SLAB
12. NOT USED
13. REMOVE 150mm CONCRETE LOADING PLATFORM
14. REMOVE CONCRETE FOUNDATION WALL AND FOOTING
15. REMOVE EXPANSION JOINT MATERIAL
16. REMOVE EXISTING EARTH FILL
17. REMOVE SLOPED CONCRETE RETAINING WALL (200mm TOP, 300mm BASE)
18. REMOVE 130mm CONCRETE SLAB ON GRADE
19. REMOVE 300mm CONCRETE SLAB, WATER PROOF MEMBRANE AND 50mm CONCRETE BASE SLAB
20. REMOVE (300mm–400mm) CONCRETE SLAB AND WATER PROOF MEMBRANE
21. REMOVE 50mm PARGING
22. REMOVE CONCRETE WALL (300mm) AND WATER PROOF MEMBRANE
23. REMOVE 1220mm X 2000mm STEEL DOORS, FRAME AND ANCHORING SYSTEM
24. REMOVE 230mm X 300mm METAL VENT
25. REMOVE CONCRETE RETAINING WALL (200mm TOP, 300mm BASE), WALL HEIGHT VARIES (3000mm –1370mm) FOLLOWING GRADE
26. CONTRACTOR SHALL REMOVE EXISTING PAPER PLAQUE FROM MAGAZINE 27121 WITHOUT DAMAGE AND TURN OVER TO THE COR. CONTRACTOR TO REMOVE PLAQUE INCLUDING THE SURROUNDING 152mm OF THE CONCRETE WALL IT IS MOUNTED ON AS A SINGLE PIECE.

GENERAL NOTES

1. REFER TO DRAWING G–005 FOR GENERAL NOTES, ABBREVIATIONS, SYMBOLS, ETC.
2. DEMOLITION DRAWINGS ARE BASED ON ORIGINAL CONSTRUCTION DOCUMENTS: "INTERIM AMMUNITION STORAGE FACILITIES GUADALCANAL AREA," DATED 12–9–1955, AND MAY NOT REFLECT ACTUAL DIMENSIONS OR CONDITIONS IN THE FIELD.

BASE BID INCLUDES THE DEMOLITION OF MAGAZINE 27120.

BID OPTION 00020A INCLUDES THE DEMOLITION OF MAGAZINES 27167 - 27169 AND MAGAZINE 27121

SYM	DESCRIPTION	DATE	APPR

NAVFAC

COMMONWEALTH OF VIRGINIA 6-10-15 STEVEN JAMES WOODYATT Lic. No. 11711 ARCHITECT

SEAL

JACOBS
1100 NORTH GLEBE ROAD SUITE 500
ARLINGTON, VIRGINIA 22201
TEL (571) 218–1000 FAX (571) 218–1600
A/E INFO

APPROVED

FOR COMMANDER NAVFAC 18 June 2015

ACTIVITY

SATISFACTORY TO DATE Signed by email 18 May 2015

DES	SW	DRW	YN	CHK	SW

<<PM/DM>>	
BRANCH MANAGER	MS
CHIEF ENG/ARCH	THC
FIRE PROTECTION	KTD

DEPARTMENT OF THE NAVY
NAVAL FACILITIES ENGINEERING COMMAND
NAVAL FACILITIES ENGINEERING COMMAND
MARINE CORPS BASE – QUANTICO
QUANTICO, VA
P-635 ASP EXPANSION
MAGAZINES – DEMOLITION AND BID OPTION 0002A

SCALE: 1:100 AND 1:50
EPROJECT NO.: 1312142
CONSTR. CONTR. NO.

NAVFAC DRAWING NO.
13072316

SHEET 100 OF 201

AD-101

DRAWFORM REVISION: 10 MARCH 2009

FILE NAME: C:\pwworking\dms\tonudjh\d0751228\BLD0635–1312142–AD101.dwg LAYOUT NAME: Layout1 PLOTTED: Monday, June 08, 2015 – 11:13am USER: tonudjh

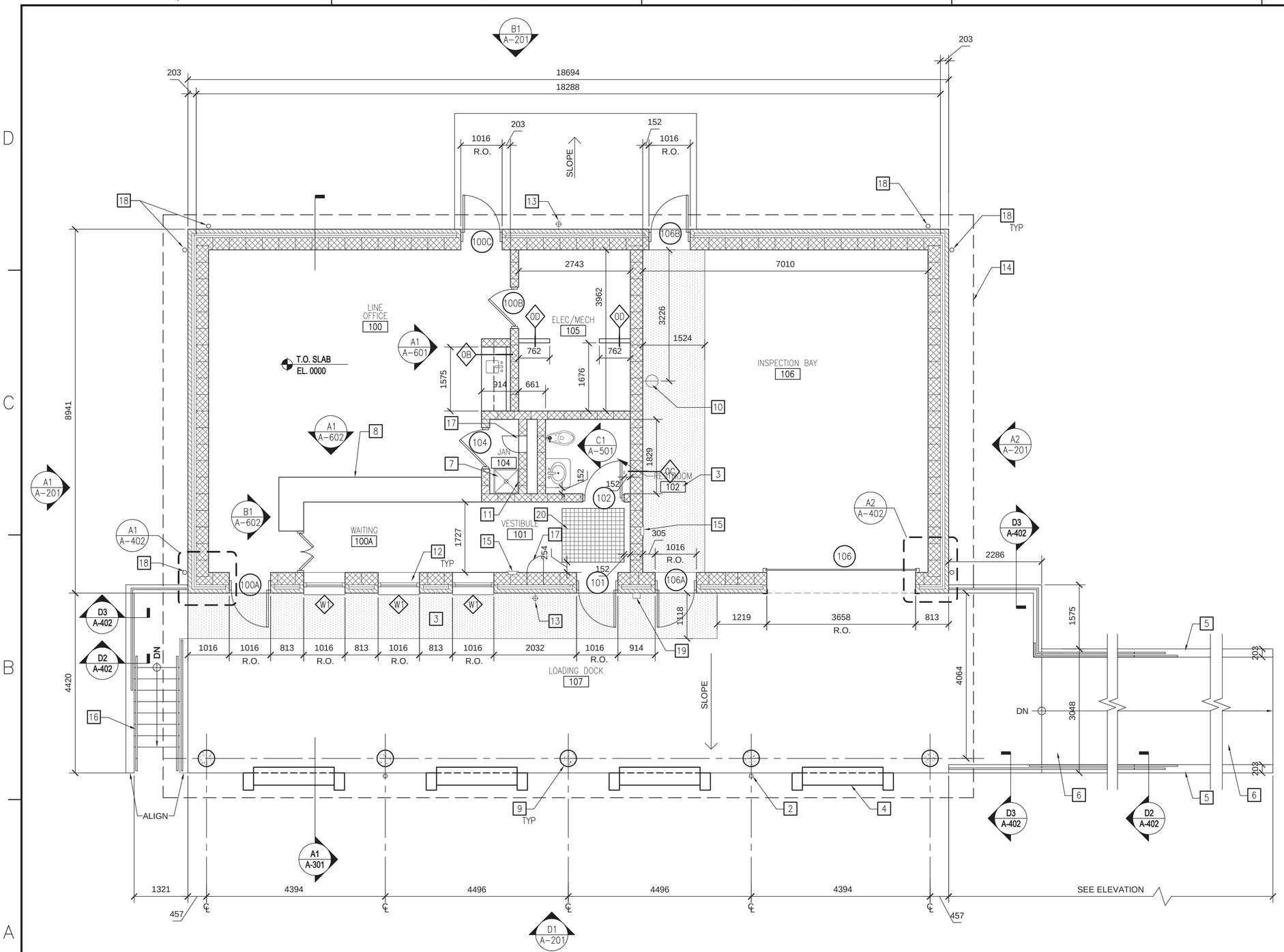

FLOOR PLAN

SCALE: 1:50

PLAN NORTH

GENERAL NOTES

1. REFER TO DRAWING G-005 FOR GENERAL NOTES, ABBREVIATIONS, SYMBOLS, ETC.
2. IF DIMENSIONS CONFLICT, BRING CONFLICT TO ATTENTION OF THE COR PRIOR TO PROCEEDING WITH CONSTRUCTION.
3. ALL INTERIOR PARTITION ARE TYPE-0A, UON.

KEY NOTES

1. NOT USED
2. DOWNSPOUT AND DRAIN BOOT, TYP. OF 2
3. SOLID PAINTED SURFACE AREA
4. EDGE-OF-DOCK LEVELER, MANUAL-TYPE, TYP. OF 4
5. 150mm CURB AT RAMP
6. CONCRETE DOCK RAMP, SLOPE 1:12, MAX., NON-SLIP BROOM FINISH
7. FLOOR MOUNTED MOP SINK
8. TRANSACTION COUNTER
9. CONCRETE COLUMN
10. EYE-WASH STATION
11. MOP HOLDER LOCATION, 1830mm AFF
12. FIXED EXTRUDED ALUMINUM WINDOWS, PROVIDE 1" ALUM. HORIZ. BLINDS, BRUSHED ALUMINUM FINISH
13. HOSE BIB
14. EXTENT OF ROOF ABOVE
15. SEMI-RECESSED FIRE EXTINGUISHER CABINET
16. HANDRAIL, SEE D4/A-402 FOR TYPICAL DETAILS
17. 406mm X 406mm ACESS PANEL AT 406mm AFF.
18. DOWNSPOUT AND SPLASH BLOCK, TYP OF 6
19. RAPID ENTRY LOCK BOX AT 1524mm AFF
20. 1524mm X 1321mm WALK-OFF MAT IN 50mm RECESS-FORMED PIT

SYM	DESCRIPTION	DATE	APPR

NAVFAC

COMMONWEALTH OF VIRGINIA 6-10-15 STEVEN JAMES WOODYATT Lic. No. 11711 ARCHITECT

SEAL

JACOBS
1100 NORTH GLEBE ROAD SUITE 500
ARLINGTON, VIRGINIA 22201
TEL (571) 218-1000 FAX (571) 218-1600
A/E INFO

APPROVED
FOR COMMANDER NAVFAC 18 June 2015
ACTIVITY
SATISFACTORY TO DATE 18 May 2015

DES	SW	DRW	JS
CHK	SW		
<<CPM/DMD>>			
BRANCH MANAGER			MS
CHIEF ENG/ARCH			THC
FIRE PROTECTION			KTD

DEPARTMENT OF THE NAVY
NAVAL FACILITIES ENGINEERING COMMAND
NAVAL FACILITIES ENGINEERING COMMAND
MARINE CORPS BASE – QUANTICO
QUANTICO, VA
P-635 ASP EXPANSION
FLOOR PLAN

SCALE: 1:50
EPROJECT NO.: 1312142
CONSTR. CONTR. NO.
NAVFAC DRAWING NO. 13072317
SHEET 102 OF 201
A-101

DRAWFORM REVISION: 10 MARCH 2009

FILE NAME: C:\pwworking\gbno\tonudjh\d0751228\BLDG635-1312142-A101.dwg LAYOUT NAME: Layout1 PLOTTED: Monday, June 08, 2015 - 11:14am USER: tonudjh

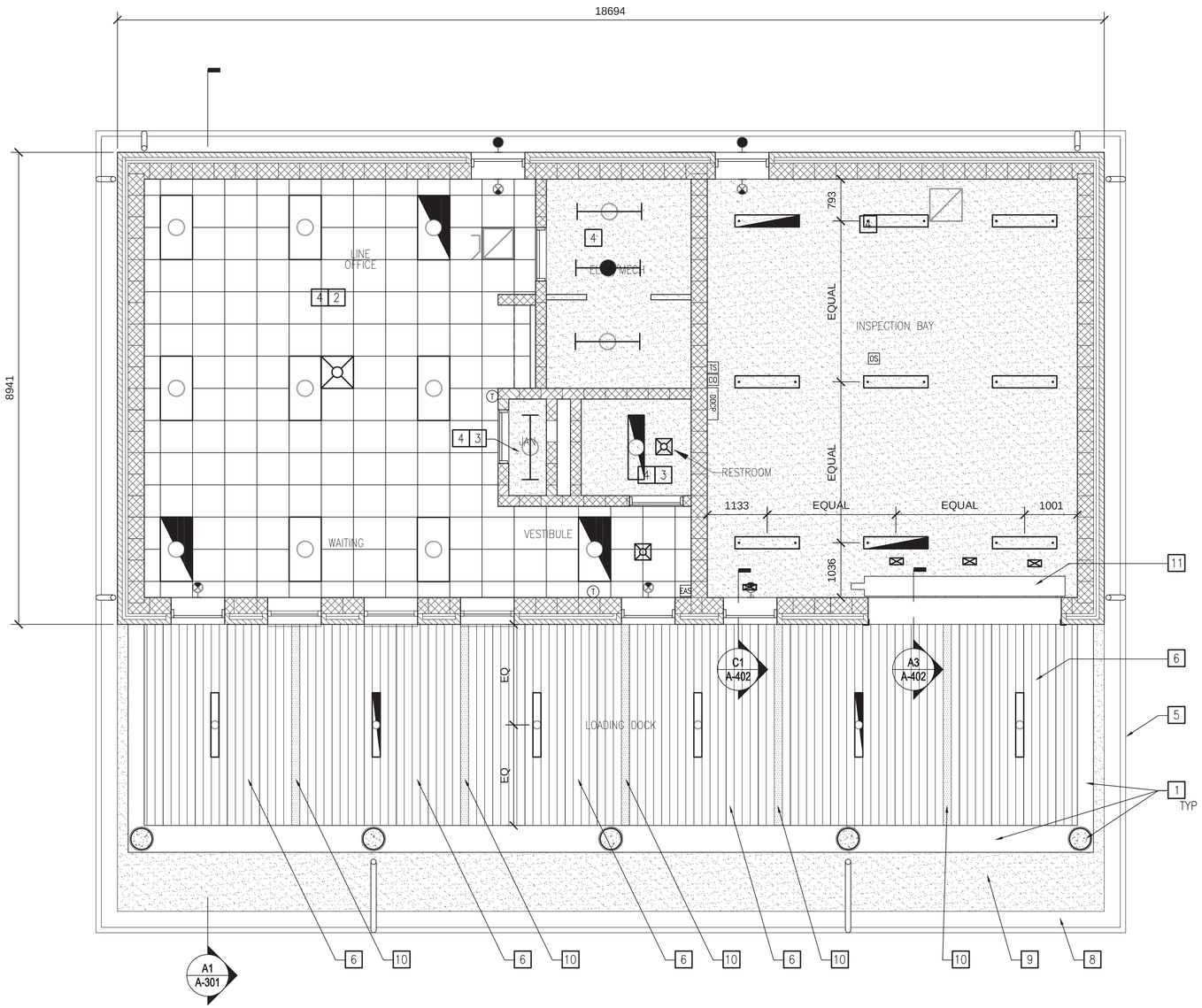

REFLECTED CEILING PLAN

SCALE: 1:50

PLAN NORTH

0 500 1000 2000 MILLIMETER

SCALE: 1:50

GENERAL NOTES

1. REFER TO DRAWING G-005 FOR GENERAL NOTES, ABBREVIATIONS, SYMBOLS, ETC.
2. IF DIMENSIONS CONFLICT, BRING CONFLICT TO ATTENTION OF THE COR PRIOR TO PROCEEDING WITH CONSTRUCTION.
3. LIGHT FIXTURES ARE TO BE CENTERED WITHIN ROOM UNLESS OTHERWISE NOTED.

KEY NOTES

1. CONCRETE COLUMN AND BEAM
2. ACOUSTICAL PANEL CEILING CEILING SYSTEM AT 2743mm A.F.F. CEILING GRID TO BE CENTERED WITHIN SPACE.
3. GYPSUM WALL BOARD CEILING AT 2438mm A.F.F.
4. MOIST. RESIST. GYPSUM WALL BOARD CEILING ON RESILIENT CHANNELS AT UNDERSIDE OF TRUSS (4226mm A.F.F.), PT-8
5. EDGE OF ROOF
6. METAL SOFFIT PANELS AT BOTTOM OF TRUSS ON MTL. HAT CHANNELS.
7. NOT USED
8. COMPOSITE SOFFIT, PAINTED PT-10, WITH CONTINUOUS VENT.
9. EXTERIOR GRADE GWB, PAINTED PT-1.
10. PRE-FINISHED LINEAR SOFFIT VENT, TYP. OF 5
11. O.H. DOOR HOUSING

LEGEND

ACOUSTICAL CEILING PANEL

GYPSUM BOARD CEILING

SYM	DESCRIPTION	DATE	APPR

NAVFAC

COMMONWEALTH OF VIRGINIA 6-10-15 STEVEN JAMES WOODYATT Lic. No. 11711 ARCHITECT

SEAL

JACOBS

1100 NORTH GLEBE ROAD SUITE 500
ARLINGTON, VIRGINIA 22201
TEL (571) 218-1000 FAX (571) 218-1600

A/E INFO

APPROVED

FOR COMMANDER NAVFAC 18 June 2015

ACTIVITY

Signature on file 15 May 2015

SATISFACTORY TO DATE

DES	SW	DRW	IT	CHK	SW

<<PM/DM>>

BRANCH MANAGER MS

CHIEF ENG/ARCH THC

FIRE PROTECTION KTD

DEPARTMENT OF THE NAVY
NAVAL FACILITIES ENGINEERING COMMAND
NAVAL FACILITIES ENGINEERING COMMAND
MARINE CORPS BASE - QUANTICO
QUANTICO, VA

P-635 ASP EXPANSION

REFLECTED CEILING PLAN

SCALE: 1:50

EPROJECT NO.: 1312142

CONSTR. CONTR. NO.

NAVFAC DRAWING NO. 13072318

SHEET 102 OF 201

A-102

DRAWFORM REVISION: 10 MARCH 2009

FILE NAME: C:\pwworking\pbna\tonudjih\d0751228\BLD635-1312142-A102.dwg LAYOUT NAME: Layout1 PLOTTED: Monday, June 08, 2015 - 11:14am USER: tonudjih

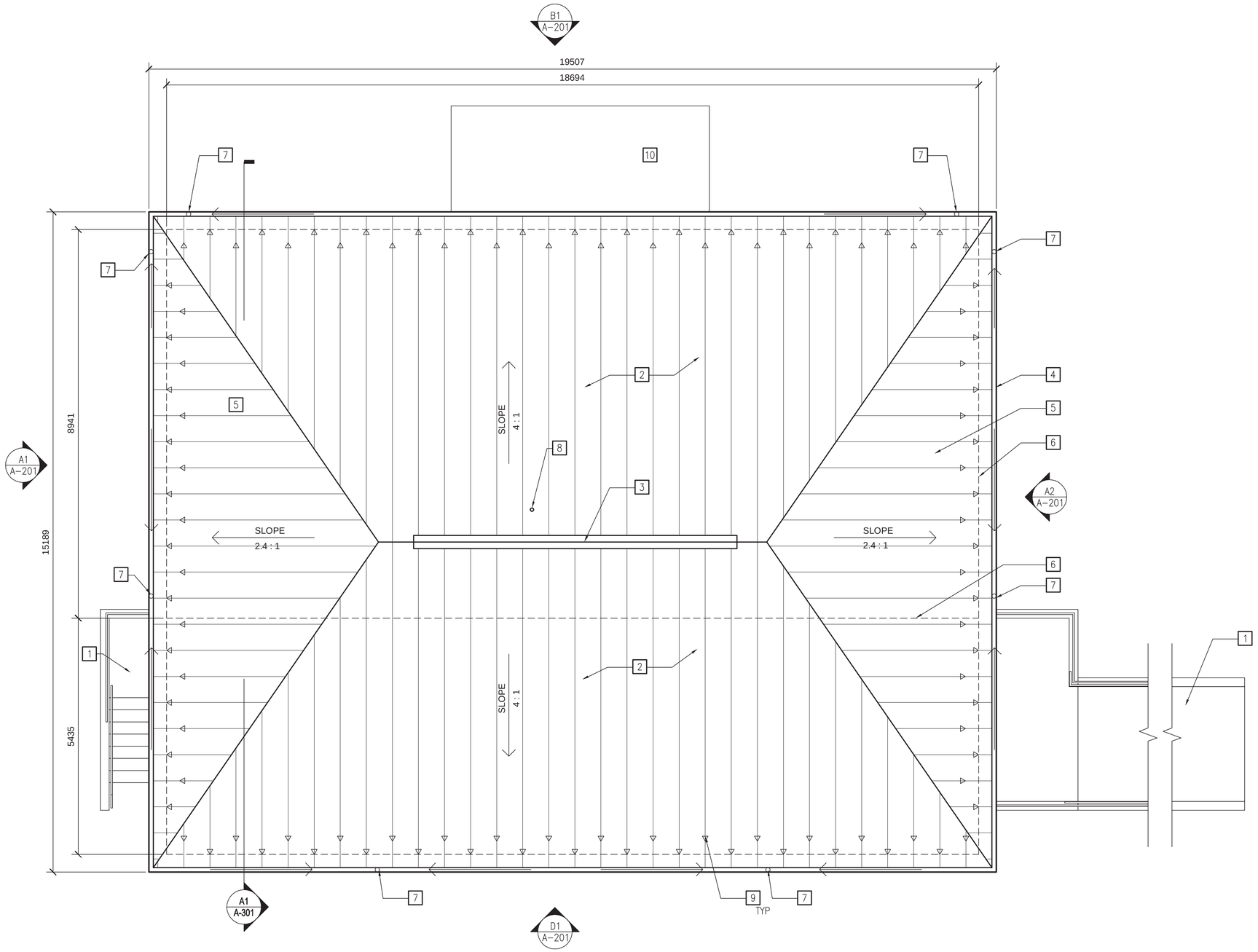

ROOF PLAN

SCALE: 1:50

0 500 1000 2000 MILLIMETER

SCALE: 1:50

GENERAL NOTES

1. REFER TO DRAWING G-005 FOR GENERAL NOTES, ABBREVIATIONS, SYMBOLS, ETC.

KEY NOTES

1. EXTERIOR STAIR OR RAMP BELOW, TYPICAL
2. STANDING SEAM METAL ROOF, 4:1 SLOPE
3. CONTINUOUS RIDGE VENT, 8000 LENGTH
4. METAL GUTTER, 1% SLOPE, HALF-CIRCLE, 152mm DIA.
5. STANDING SEAM METAL ROOF, 2.4:1 SLOPE
6. EDGE OF EXTERIOR WALL BELOW
7. DOWNSPOUT, 127mm DIA.
8. ROOF VENT, METAL FLASHING
9. SNOW GUARDS, STAGGERED
10. CONCRETE PAD

SYM	DESCRIPTION	DATE	APPR

NAVFAC

COMMONWEALTH OF VIRGINIA
6-10-15
STEVEN JAMES WOODYATT
Lic. No. 11711
ARCHITECT

SEAL

JACOBS
1100 NORTH GLEBE ROAD SUITE 500
ARLINGTON, VIRGINIA 22201
TEL (571) 218-1000 FAX (571) 218-1600
A/E INFO

APPROVED
FOR COMMANDER NAVFAC 18 June 2015
ACTIVITY
SATISFACTORY TO DATE 15 May 2015

DES	SW	DRW	IT	CHK	SW

<<CPM/DM>>
BRANCH MANAGER MS
CHIEF ENG/ARCH THC
FIRE PROTECTION KTD

DEPARTMENT OF THE NAVY
NAVAL FACILITIES ENGINEERING COMMAND
NAVAL FACILITIES ENGINEERING COMMAND
MARINE CORPS BASE – QUANTICO
QUANTICO, VA
P-635 ASP EXPANSION
ROOF PLAN

SCALE: 1:50
EPROJECT NO.: 1312142
CONSTR. CONTR. NO.
NAVFAC DRAWING NO. 13072319
SHEET 103 OF 201
A-103

DRAWFORM REVISION: 10 MARCH 2009

FILE NAME: C:\pwworking\gbna\tsoudjh\d0751228\BLD0635-1312142-A103.dwg LAYOUT NAME: Layout1 PLOTTED: Monday, June 08, 2015 - 11:14am USER: tsoudjh

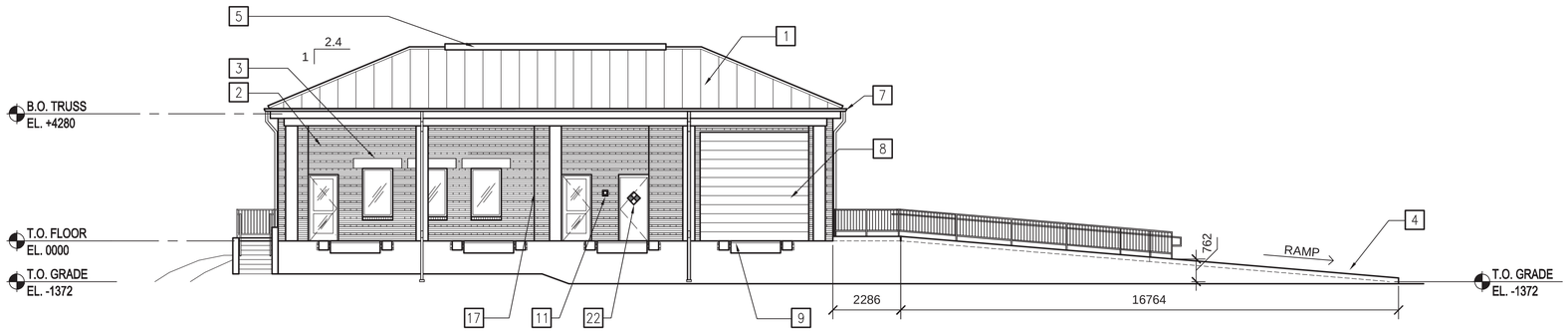

SOUTH ELEVATION

SCALE: 1:100 A-201 D1

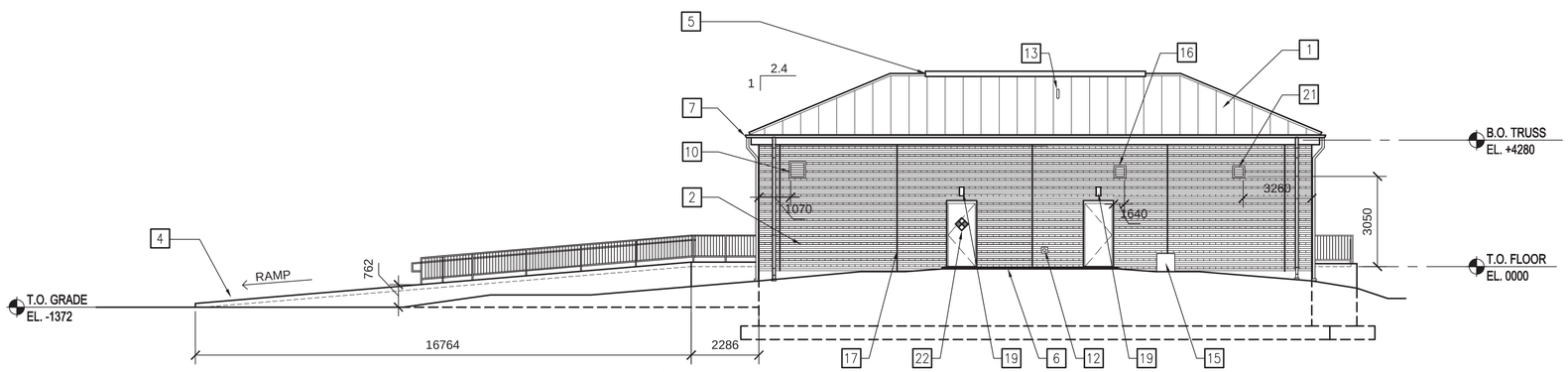

NORTH ELEVATION

SCALE: 1:100 A-201 B1

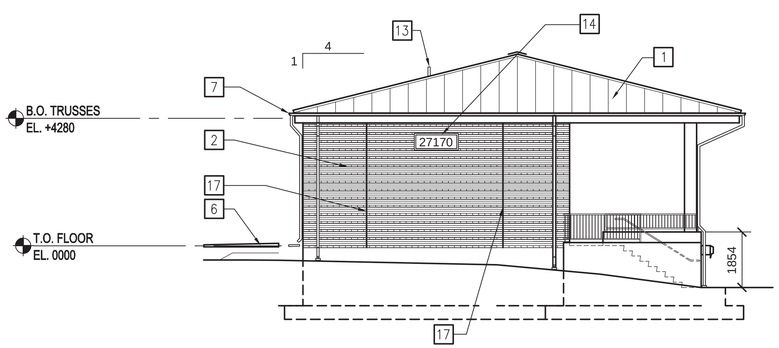

WEST SIDE ELEVATION

SCALE: 1:100 A-201 A1

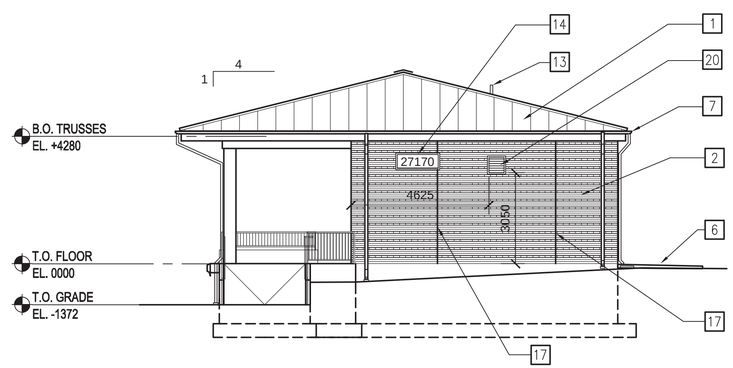

EAST SIDE ELEVATION

SCALE: 1:100 A-201 A2

0 1000 2000 4000 MILLIMETER

SCALE: 1:100

GENERAL NOTES

1. REFER TO DRAWING G-005 FOR GENERAL NOTES, ABBREVIATIONS, SYMBOLS, ETC.
2. IF DIMENSIONS CONFLICT, BRING CONFLICT TO ATTENTION OF THE COR PRIOR TO PROCEEDING WITH CONSTRUCTION.
3. LOUVER LOCATIONS TO BE ADJUSTED TO BRICK COURSING.

KEY NOTES

1. STANDING SEAM METAL ROOF, TYPICAL
2. BRICK VENEER
3. PRECAST CONCRETE LINTEL
4. RECEIVING RAMP AND CURB, 1:12 MAX. SLOPE
5. CONTINUOUS RIDGE VENT, COPPER
6. CONCRETE PAD
7. GUTTER & DOWNSPOUTS
8. O.H. ROLL UP DOOR
9. EDGE-OF-DOCK LEVELER, MANUAL
10. PREFINISHED 457mm x 457mm BLAST EXHAUST/RELIEF LOUVER
11. RAPID ENTRY LOCK BOX AT 1524 AFF
12. HOSE BIB
13. VENT PIPE PENETRATION
14. BUILDING SIGNAGE (1473mm X 559mm), WHITE REFLECTIVE BACKGROUND WITH 100mm BLACK NUMBERS. APPROVAL AND FINAL LOCATION BY COR.
15. MECHANICAL EQUIPMENT
16. PREFINISHED 305mm x 305mm INTAKE LOUVER
17. 10mm VERTICAL CONTROL JOINT, 4572mm SEPARATION DISTANCE, MAX., 2250mm MIN. FROM CORNER.
18. NOT USED
19. EXTERIOR LIGHTING
20. PREFINISHED 508mm x 508mm INTAKE LOUVER
21. PREFINISHED 305mm x 305mm EXHAUST/RELIEF LOUVER
22. HAZMAT SIGNAGE, COORDINATE FINAL NUMBERING WITH COR

SYM	DESCRIPTION	DATE	APPR

NAVFAC

COMMONWEALTH OF VIRGINIA
6-10-15
STEVEN JAMES WOODYATT
Lic. No. 11711
ARCHITECT
SEAL

JACOBS
1100 NORTH GLEBE ROAD SUITE 500
ARLINGTON, VIRGINIA 22201
TEL (571) 218-1000 FAX (571) 218-1600
A/E INFO

APPROVED
FOR COMMANDER NAVFAC 18 June 2015
ACTIVITY
SATISFACTORY TO DATE 15 May 2015

DES	SW	DRW	JS	CHK	SW

<<CPM/DMO>>
BRANCH MANAGER MS
CHIEF ENG/ARCH THC
FIRE PROTECTION KTD

DEPARTMENT OF THE NAVY
NAVAL FACILITIES ENGINEERING COMMAND
NAVAL FACILITIES ENGINEERING COMMAND
MARINE CORPS BASE – QUANTICO
QUANTICO, VA
P-635 ASP EXPANSION
ELEVATIONS

SCALE: 1:100
EPROJECT NO.: 1312142
CONSTR. CONTR. NO.
NAVFAC DRAWING NO. 13072320
SHEET 104 OF 201
A-201

DRAWFORM REVISION: 10 MARCH 2009

FILE NAME: C:\pwworking\ghna\tonudjih\d0751228\BLD0635-1312142-A201.dwg LAYOUT NAME: Layout1 PLOTTED: Monday, June 08, 2015 - 11:15am USER: tonudjih

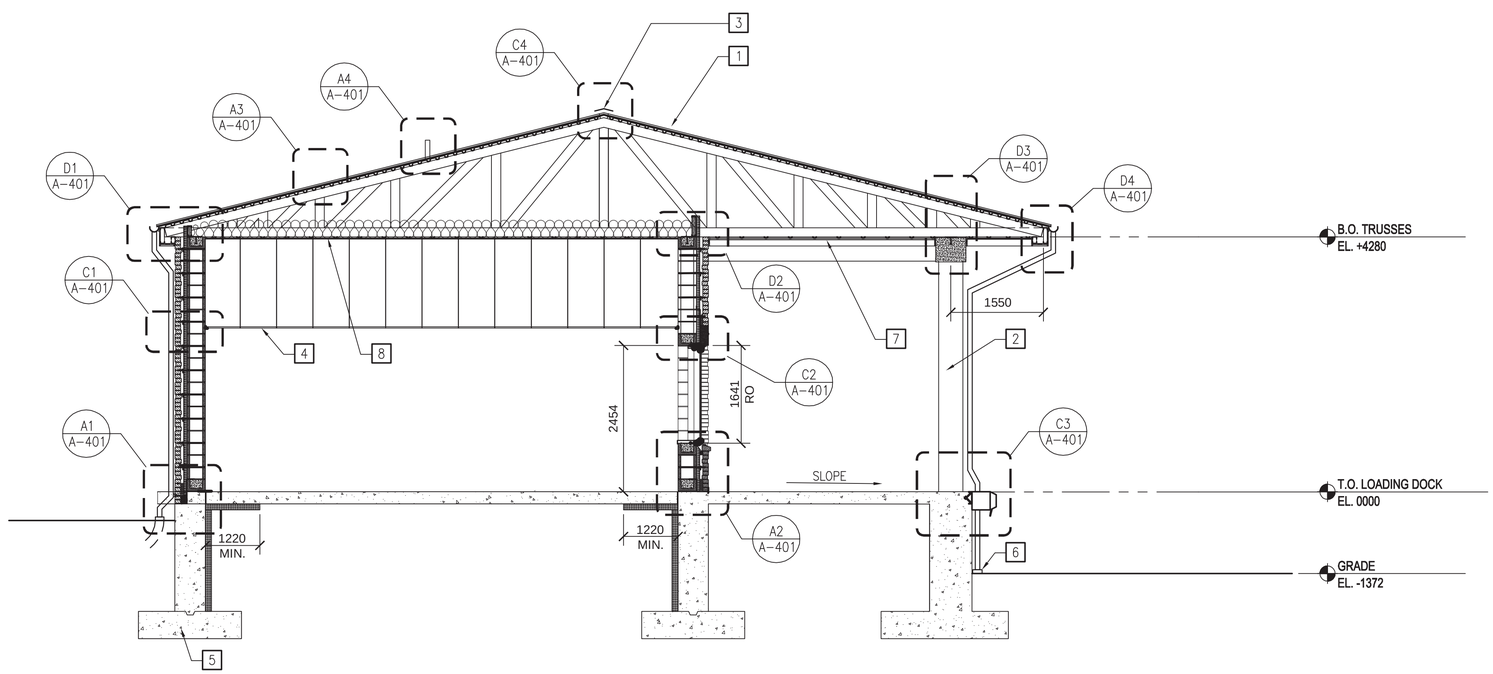

SECTIONS

SCALE: 1:50

A-301 A1

0 500 1000 2000 MILLIMETER

SCALE: 1:50

GENERAL NOTES

1. REFER TO DRAWING G-005 FOR GENERAL NOTES, ABBREVIATIONS, SYMBOLS, ETC.
2. IF DIMENSIONS CONFLICT, BRING CONFLICT TO ATTENTION OF THE COR PRIOR TO PROCEEDING WITH CONSTRUCTION.
3. REF. STRUCTURAL DOCUMENTS FOR FOUNDATION INFORMATION.

KEY NOTES

1. STANDING SEAM METAL ROOF OVER COVERBOARD AND METAL DECKING
2. CONCRETE COLUMN BEYOND
3. RIDGE CAP AND VENT
4. ACOUSTICAL PANEL CEILING SYSTEM AS SCHEDULED
5. CONCRETE FOUNDATION
6. DOWNSPOUT DRAINAGE, SEE CIVIL FOR CONTINUATION
7. PRE-FINISHED METAL SOFFIT/VENT ON 38mm HAT CHANNELS
8. MOISTURE RESISTANT GWB AT UNDERSIDE OF TRUSS ON RESILIENT CHANNELS, P-8 FINISH

SYM	DESCRIPTION	DATE	APPR

NAVFAC

COMMONWEALTH OF VIRGINIA
6-10-15
STEVEN JAMES WOODYATT
Lic. No. 11711
ARCHITECT

SEAL

JACOBS
1100 NORTH GLEBE ROAD SUITE 500
ARLINGTON, VIRGINIA 22201
TEL (571) 218-1000 FAX (571) 218-1600
A/E INFO

APPROVED
FOR COMMANDER NAVFAC 18 June 2015

ACTIVITY
SATISFACTORY TO DATE 18 May 2015

DES	SW	DRW	JS	CHK	SW

<<CPM/DM>>
BRANCH MANAGER MS
CHIEF ENG/ARCH THC
FIRE PROTECTION KTD

DEPARTMENT OF THE NAVY
NAVAL FACILITIES ENGINEERING COMMAND
NAVAL FACILITIES ENGINEERING COMMAND
MARINE CORPS BASE - QUANTICO
QUANTICO, VA
P-635 ASP EXPANSION
SECTIONS

SCALE: 1:50
EPROJECT NO.: 1312142
CONSTR. CONTR. NO.
NAVFAC DRAWING NO. 13072321
SHEET 105 OF 201
A-301

DRAWFORM REVISION: 10 MARCH 2009

FILE NAME: C:\pwworking\qbro\\tonudjh\d0751228\BLDG635-1312142-A301.dwg LAYOUT NAME: Layout1 PLOTTED: Monday, June 08, 2015 - 11:15am USER: tonudjh

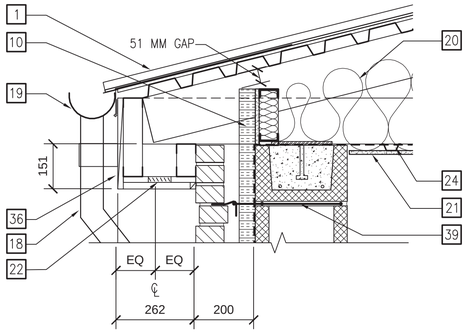

ENLARGED ROOF SECTION (D1)
SCALE: 1:10 A-401

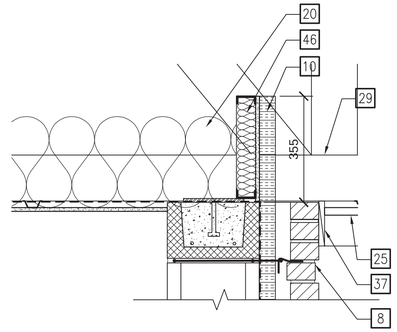

ENLARGED ROOF SECTION (D2)
SCALE: 1:10 A-401

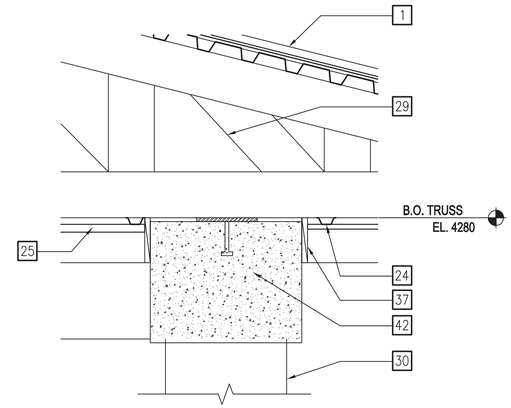

ENLARGED ROOF SECTION (D3)
SCALE: 1:10 A-401

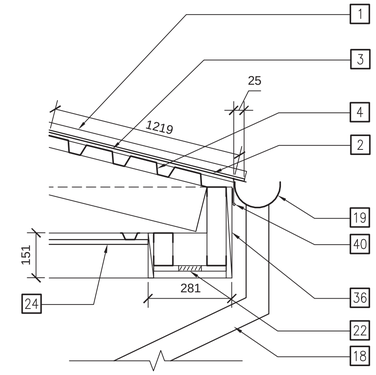

ENLARGED ROOF SECTION (D4)
SCALE: 1:10 A-401

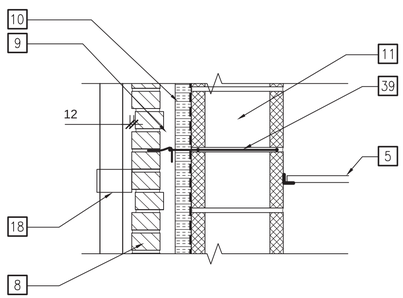

ENLARGED WALL SECTION TYP. (C1)
SCALE: 1:10 A-401

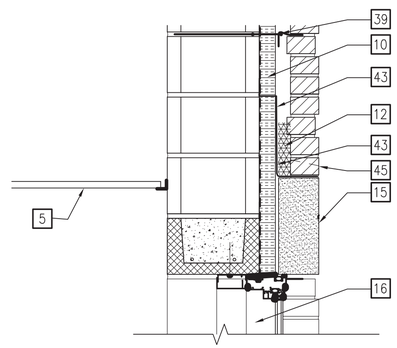

ENLARGED WALL SECTION (C2)
SCALE: 1:10 A-401

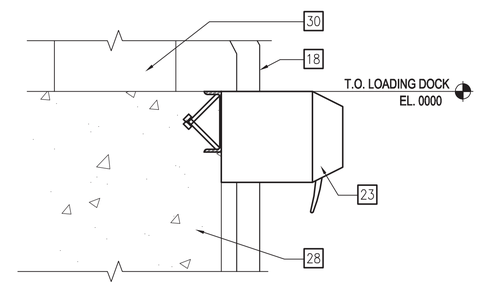

ENLARGED WALL SECTION (C3)
SCALE: 1:10 A-401

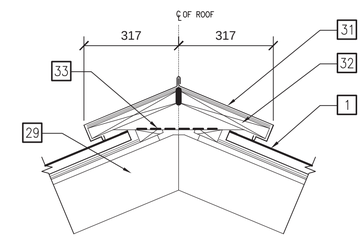

RIDGE VENT DETAIL (C4)
SCALE: 1:10 A-401

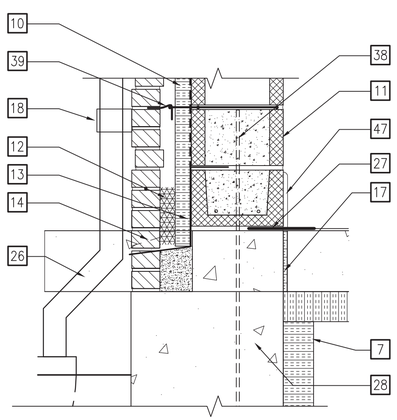

ENLARGED WALL SECTION (A1)
SCALE: 1:10 A-401

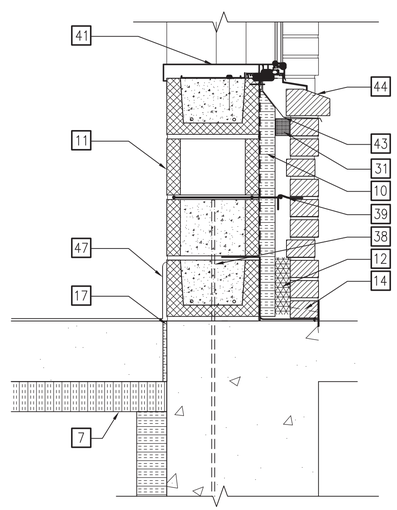

ENLARGED WALL SECTION (A2)
SCALE: 1:10 A-401

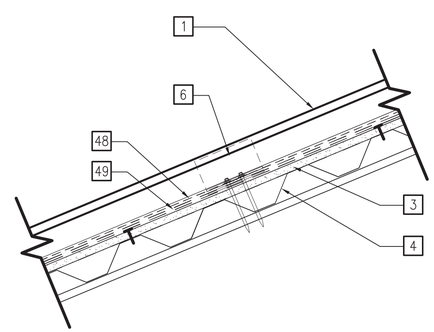

TYPICAL ROOF DETAIL (A3)
SCALE: 1:5 A-401

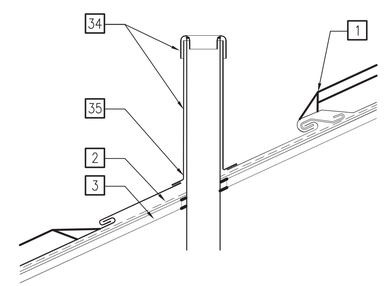

ROOF VENT DETAIL (A4)
SCALE: 1:5 A-401

0 50 100 200 MILLIMETER
SCALE: 1:5

0 100 200 400 MILLIMETER
SCALE: 1:10

GENERAL NOTES

1. REFER TO DRAWING G-005 FOR GENERAL NOTES, ABBREVIATIONS, SYMBOLS, ETC.
2. IF DIMENSIONS CONFLICT, BRING CONFLICT TO ATTENTION OF THE COR PRIOR TO PROCEEDING WITH CONSTRUCTION.

KEY NOTES

1. STANDING SEAM METAL ROOF SYSTEM
2. WATER PROTECTION MEMBRANE (WATER/ICE PROTECTION), 1219mm FROM EDGE OF ROOF AND EXTEND 610mm AROUND ROOF VENT.
3. 13mm COVERBOARD
4. 22ga. METAL DECKING
5. SCHEDULED CEILING
6. STANDING SEAM CLIP
7. 38mm UNDER SLAB BOARD INSULATION, R-7.5 MIN., TO TOP OF FOOTING, EXTEND 1220mm HORIZ. AT SLAB PERIMETER
8. BRICK VENEER, OFFSET 13mm EVERY FOURTH COURSE
9. 51mm AIRSPACE
10. 51mm RIGID INSULATION OVER FLUID-APPLIED VAPOR BARRIER
11. 305mm CMU WALL, PRIMED AND PAINTED ON INTERIOR SIDE
12. MORTAR DROPPINGS COLLECTION DEVICE
13. FLASHING
14. WEEP HOLES @ 610mm O.C., TYP.
15. PRECAST CONCRETE LINTEL
16. FIXED EXTRUDED ALUMINUM WINDOWS
17. ISOLATION JOINT
18. DOWNSPOUT, 127mm DIA., AND SUPPORT BEYOND
19. GUTTER, HALF-CIRCLE, 152mm DIA.
20. R-38 LOOSE FILL INSULATION
21. CONTINUOUS VAPOR/AIR RETARDER, PT-8
22. CONTINUOUS COMPOSITE SOFFIT VENT WITH INSECT SCREEN, PAINTED
23. DOCK BUMPER / MANUAL EDGE-OF-DOCK LEVELER
24. EXTERIOR GRADE GWB ON RESILIENT CHANNELS ATTACHED TO UNDERSIDE OF TRUSS AT 610mm O.C., PAINTED PT-1
25. METAL PANEL SOFFIT SYSTEM, VENTS AT 1219mm, O.C., MTL-1
26. DOWNSPOUT DRAINAGE BOOT, SEE CIVIL FOR CONTINUATION
27. CONTINUOUS JOINT COVER
28. CONCRETE FOUNDATION
29. LIGHT GAGE METAL TRUSS SYSTEM
30. CONCRETE COLUMN BEYOND
31. CAVITY SEAL
32. WOOD BLOCKING
33. INSECT SCREEN
34. VENT PIPE AND CAP
35. FLASHING SLEEVE
36. COMPOSITE FASCIA, PAINTED P-10
37. CONTINUOUS COMPOSITE TRIM, PAINTED PT-10
38. REINFORCING STEEL BAR
39. HORIZ. JOINT REINFORCEMENT WITH EYE & PINTLE WALL TIES AT 406mm O.C., VERTICALLY
40. CONTINUOUS EDGE STRIP
41. PREFINISHED METAL WINDOW SILL AND STOOL
42. CONCRETE BEAM
43. FLEXIBLE FLASHING WITH END DAMS
44. SPECIAL BRICK SILL, 38mm OVERHANG
45. WEEP HOLES AT 610mm SPACING
46. 64mm METAL STUD FRAMING WITH INSULATION
47. EPOXY BASE
48. COVER SHEET
49. BUILDING FELT (2 LAYERS)

SYM	DESCRIPTION	DATE	APPR

NAVFAC

COMMONWEALTH OF VIRGINIA
6-10-15
STEVEN JAMES WOODYATT
Lic. No. 11711
ARCHITECT
SEAL

JACOBS
1100 NORTH GLEBE ROAD SUITE 500
ARLINGTON, VIRGINIA 22201
TEL (571) 218-1000 FAX (571) 218-1600
A/E INFO

APPROVED
FOR COMMANDER NAVFAC 18 June 2015
ACTIVITY
SATISFACTORY TO DATE 15 May 2015

DES	SW	DRW	JS	CHK	SW

<<CPM/DMD>>
BRANCH MANAGER MS
CHIEF ENG/ARCH THC
FIRE PROTECTION KTD

DEPARTMENT OF THE NAVY
NAVAL FACILITIES ENGINEERING COMMAND
NAVAL FACILITIES ENGINEERING COMMAND
MARINE CORPS BASE - QUANTICO
QUANTICO, VA
P-635 ASP EXPANSION
ENLARGED SECTIONS & DETAILS

SCALE: 1:50
EPROJECT NO.: 1312142
CONSTR. CONTR. NO.
NAVFAC DRAWING NO. 13072322
SHEET 106 OF 201
A-401

DRAWFORM REVISION: 10 MARCH 2009

FILE NAME: C:\pwworking\gbno\\ctoudjh\d0751228\BL0635-1312142-A401.dwg LAYOUT NAME: Layout1 PLOTTED: Monday, June 08, 2015 - 11:15am USER: ctoudjh

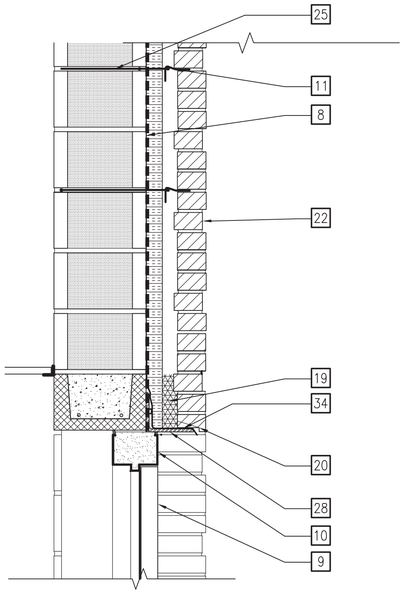

WALL SECTION DETAIL (C1)
SCALE: 1:10 A-402

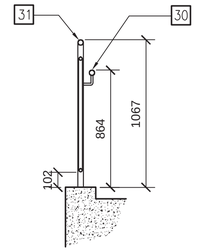

STAIR / RAMP SECTION (D2)
SCALE: NTS A-402

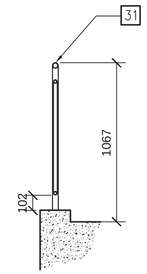

GUARDRAIL SECTION (D3)
SCALE: NTS A-402

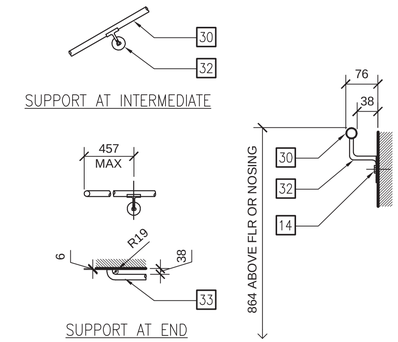

TYP WALL RAIL ANCHORAGE (D4)
SCALE: NTS A-402

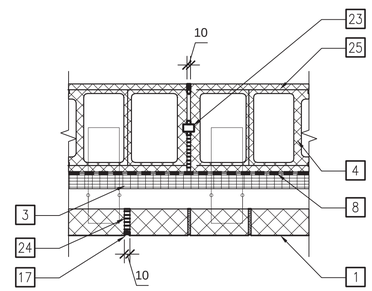

CONTROL JOINT DETAIL (C2)
SCALE: 1:10 A-402

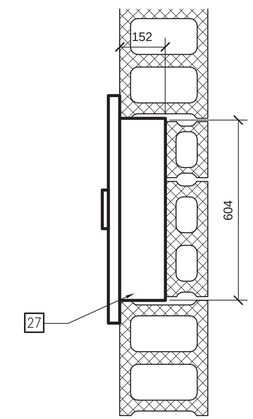

FIRE EXT. CABINET DETAIL (C3)
SCALE: 1:10 A-402

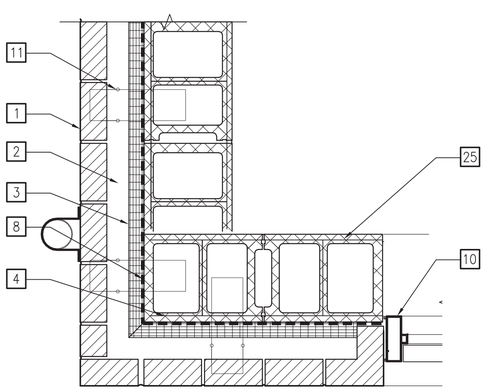

WALL PLAN DETAIL (A1)
SCALE: 1:10 A-402

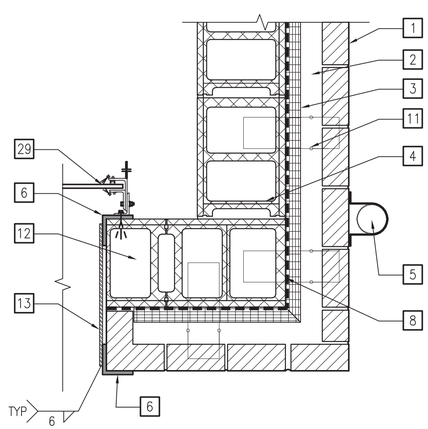

WALL PLAN DETAIL (A2)
SCALE: 1:10 A-402

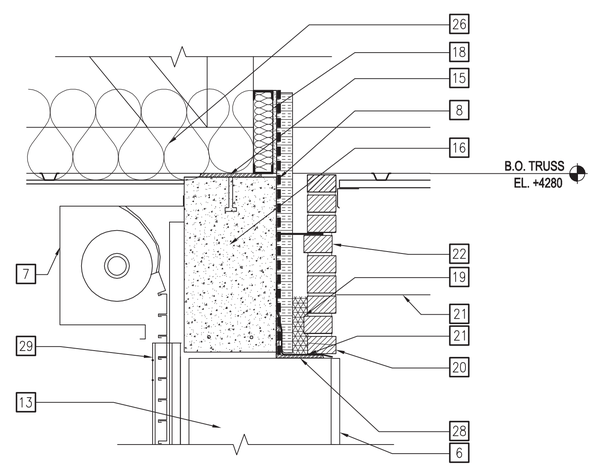

O.H. SECTION DETAIL (A3)
SCALE: 1:10 A-402

0 100 200 400 MILLIMETER
SCALE: 1:10

GENERAL NOTES

1. REFER TO DRAWING G-005 FOR GENERAL NOTES, ABBREVIATIONS, SYMBOLS, ETC.
2. IF DIMENSIONS CONFLICT, BRING CONFLICT TO ATTENTION OF THE COR PRIOR TO PROCEEDING WITH CONSTRUCTION.

KEY NOTES

1. BRICK VENEER WITH ANCHORS AT 406 O.C., VERT.
2. 51mm AIRSPACE
3. 51mm RIGID INSULATION
4. 305mm CMU WALL, PAINTED ON INTERIOR SIDE
5. 102mm DIA. DOWNSPOUT, HANGERS
6. L102x102x10 STEEL CORNER GUARD, PTD. TO MATCH O.H. DOOR, 3650mm VERT.
7. OVERHEAD DOOR HOUSING
8. FLUID-APPLIED, NON-PERMEABLE AIR BARRIER
9. SCHEDULED DOOR
10. DOOR FRAME
11. HORIZONTAL JOINT REINFORCEMENT W/EYE & PINTLE WALL TIES @ 406mm O.C.
12. 16mm STUDS, 165mm LONG @ 205mm O.C., GROUT CMU SOLID
13. 10x455x3650 STL PLATE, PAINTED TO MATCH O.H. DOOR.
14. WALL BRACKET SECURED TO WALL
15. STL BEARING PLATE
16. CONCRETE BEAM
17. ELASTOMERIC JOINT SEALANT WITH BACKER ROD
18. EXTERIOR SHEATHING OVER 64mm METAL STUDS
19. MORTAR DROPPINGS COLLECTION DEVICE
20. LIPPED BRICK, WEEPS
21. WOOD SOFFIT BEYOND
22. 13mm OFFSET BRICK COURSE
23. SHEAR LUG
24. COMPRESSIBLE JOINT FILLER
25. HORIZONTAL JOINT REINFORCING, LADDER TYPE
26. LOOSE FILL INSULATION, R-38, MIN.
27. FE CABINET
28. BRICK SHELF ANGLE
29. O.H. DOOR TRACK BEYOND
30. 38mm OD PIPE HANDRAIL
31. 38mm OD PIPE GUARDRAIL
32. STOCK METAL RAIL ANCHOR
33. 38mm OD PIPE HANDRAIL WITH END CAP
34. METAL FLASHING

SYM	DESCRIPTION	DATE	APPR

NAVFAC

COMMONWEALTH OF VIRGINIA
6-10-15
STEVEN JAMES WOODYATT
Lic. No. 11711
ARCHITECT
SEAL

JACOBS
1100 NORTH GLEBE ROAD SUITE 500
ARLINGTON, VIRGINIA 22201
TEL (571) 218-1000 FAX (571) 218-1600
A/E INFO

APPROVED
FOR COMMANDER NAVFAC 18 June 2015
ACTIVITY
SATISFACTORY TO DATE 15 May 2015
DES SW DRW JS CHK SW
<<PM/DM>>
BRANCH MANAGER MS
CHIEF ENG/ARCH THC
FIRE PROTECTION KTD

DEPARTMENT OF THE NAVY
NAVAL FACILITIES ENGINEERING COMMAND
MARINE CORPS BASE - QUANTICO
QUANTICO, VA
P-635 ASP EXPANSION
ENLARGED PLANS AND SECTIONS

SCALE: 1:50
EPROJECT NO.: 1312142
CONSTR. CONTR. NO.
NAVFAC DRAWING NO. 13072323
SHEET 107 OF 201
A-402
DRAWFORM REVISION: 10 MARCH 2009

FILE NAME: C:\pwworking\pbno\tanudjih\d0751228\BLDG635-1312142-A402.dwg LAYOUT NAME: Layout1 PLOTTED: Monday, June 08, 2015 - 11:16am USER: tanudjih

ROOM FINISH SCHEDULE

ROOM NO.	ROOM NAME	FLOORING	BASE	WALL SOUTH	WALL WEST	WALL NORTH	WALL EAST	CEILING	CEILING HEIGHT AFF	REMARKS
100	LINE OFFICE	EPX-1	RB-1	PT-2	PT-2	PT-2	PT-3	APC-1	SEE RCP	
100A	WAITING	EPX-1	RB-1	PT-2	–	PT-2	PT-2	APC-1	SEE RCP	
101	VESTIBULE	EPX-1	RB-1	PT-2	PT-2	PT-2	PT-2	APC-1	SEE RCP	
102	RESTROOM	CT-1	CB-1	CT-1/ PT-5	CT-1/ PT-5	CT-1/ PT-5	CT-1/ PT-5	PT-1	SEE RCP	
104	JANITOR	EPX-1	RB-1	PT-2	PT-2	PT-2	PT-2	PT-1	SEE RCP	
105	ELEC/MECH	EPX-1	RB-1	PT-2	PT-2	PT-2	PT-2	PT-1	–	
106	INSPECTION BAY	EPX-1	EPX-1	PT-2	PT-2	PT-2	PT-2	PT-1	–	PT-9 SOLID FIELD SAFETY AREA AT FLOOR, REFER TO FLOOR PLAN FOR EXTENT
107	LOADING DOCK	SC-1	–	–	–	–	–	MTL-1	SEE RCP	PT-9 SOLID FIELD SAFETY AREA AT FLOOR, REFER TO FLOOR PLAN FOR EXTENT

NOTE: FOR FINISHES AND MATERIALS REFER TO SPECIFICATIONS

RESTROOM ELEVATION & ACCESSORIES SCHEDULE

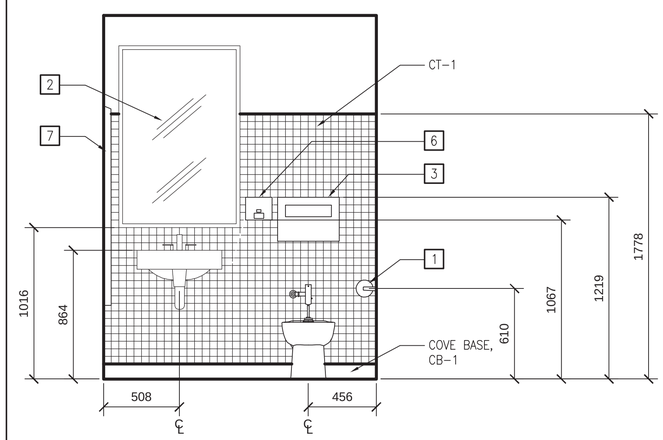

ELEVATION
SCALE: 1:20
A-501 C1

ACCESSORIES SCHEDULE

(FINAL PRODUCT SELECTION TO BE COORDINATED WITH LOCAL PUBLIC WORKS DEPARTMENT)

CODE	DESCRIPTION	MANUFACTURER	MODEL #	REMARKS
1	SURFACE MTD. TOILET PAPER DISPENSER & UTILITY SHELF			
2	S.S. CHANNEL FRAME MIRROR			457 x 762, TEMPERED
3	SURFACE MTD. TOILET SEAT COVER DISPENSER			
4	NOT USED			
5	NOT USED			
6	SURFACE MTD. SOAP DISPENSER			
7	SURFACE MTD. PAPER TOWEL DISPENSER AND WASTE RECEPTACLE			
8	MOP AND BROOM HOLDER			AT JANITOR CLOSET ROOM #104

SYM	DESCRIPTION	DATE	APPR

NAVFAC

COMMONWEALTH OF VIRGINIA
6.10.15
STEVEN JAMES WOODYATT
Lic. No. 11711
ARCHITECT
SEAL

JACOBS
1100 NORTH GLEBE ROAD SUITE 500
ARLINGTON, VIRGINIA 22201
TEL (571) 218-1000 FAX (571) 218-1600
A/E INFO

APPROVED
FOR COMMANDER NAVFAC 18 June 2015
ACTIVITY
SATISFACTORY TO DATE Signed by email 18 May 2015
DES SW DRW JS CHK SW
<<PM/DM>>
BRANCH MANAGER MS
CHIEF ENG/ARCH THC
FIRE PROTECTION KTD

DEPARTMENT OF THE NAVY
NAVAL FACILITIES ENGINEERING COMMAND
NAVAL FACILITIES ENGINEERING COMMAND
MARINE CORPS BASE – QUANTICO
QUANTICO, VA
P-635 ASP EXPANSION
FINISH SCHEDULE

SCALE: N/A
EPROJECT NO.: 1312142
CONSTR. CONTR. NO.
NAVFAC DRAWING NO. 13072324
SHEET 108 OF 201
A-501
DRAWFORM REVISION: 10 MARCH 2009

FILE NAME: C:\pwworking\gbna\tanudjih\d0751228\BLDG635-1312142-A501.dwg LAYOUT NAME: Layout1 PLOTTED: Monday, June 08, 2015 - 11:16am USER: tanudjih

DOOR SCHEDULE

DOOR NO.	ROOM NAME	DOOR					FIRE RATING	FRAME					HDWR	REMARKS / NOTES
		TYPE	W	H	TH	MAT		TYPE	MAT	HEAD	JAMB	SILL		
100A	LINE OFFICE	B	914	2184	51	AL/GL	–	F2	AL	7/A503	9/A503	8/A503	1	NO EXTERIOR PULL, EXIT ONLY, INSULATED
100B	LINE OFFICE	A	914	2134	45	MTL	–	F1	HM	5/A503	6/A503	2/A503	4	NOTE 3
100C	LINE OFFICE	A	914	2134	45	MTL	–	F1	HM	3/A503	4/A503	2/A503	2	INSULATED THERMAL
101	VESTIBULE	B	914	2184	51	AL/GL	–	F2	AL	7/A503	9/A503	8/A503	1	INSULATED
102	RESTROOM	A	914	2134	45	SC WD	–	F1	HM	5/A503	6/A503	1/A503	6	1/2" UNDERCUT, NOTE 6
104	JANITOR	A	914	2134	45	SC WD	–	F1	HM	5/A503	6/A503	2/A503	5	3/4" UNDERCUT
106	INSPECTION BAY	C	3658	3658		MTL	–						7	O.H. DOOR, RUBBER DOOR SEAL, INSULATED
106A	INSPECTION BAY	A	914	2134	45	MTL	–	F1	HM	3/A503	4/A503	2/A503	2	INSULATED THERMAL
106B	INSPECTION BAY	A	914	2134	45	MTL	–	F1	HM	3/A503	4/A503	2/A503	2	INSULATED THERMAL

DOOR AND HARDWARE NOTES:
1. REFER TO PLAN FOR LEFT OR RIGHT ORIENTATION
2. COORDINATE DOOR HARDWARE MANUFACTURER-TYPE WITH BASE SECURITY REPRESENTATIVE AND COR
3. PROVIDE SIGNAGE ON DOOR EXTERIOR (DOOR 100B) – "SPRINKLER ROOM FIRE DEPARTMENT"
4. SEE SHEET A-503 FOR DOOR AND FRAME TYPE4.
5. FOR HARDWARE SETS REFER TO SPECIFICATIONS.
6. PROVIDE MENS/WOMENS UNI-SEX RESTROOM SIGNAGE.
7. FOR DOOR AND DOOR FRAME FINISHES REFER TO SPECIFICATIONS.

SYM	DESCRIPTION	DATE	APPR

NAVFAC

COMMONWEALTH OF VIRGINIA
6-10-15
STEVEN JAMES WOODYATT
Lic. No. 11711
ARCHITECT
SEAL

JACOBS
1100 NORTH GLEBE ROAD SUITE 500
ARLINGTON, VIRGINIA 22201
TEL (571) 218-1000 FAX (571) 218-1600
A/E INFO

APPROVED
FOR COMMANDER NAVFAC 18 June 2015
ACTIVITY
SATISFACTORY TO DATE 18 May 2015

DES SW	DRW JS	CHK SW	
<<CPM/DM>>			
BRANCH MANAGER		MS	
CHIEF ENG/ARCH		THC	
FIRE PROTECTION		KTD	

DEPARTMENT OF THE NAVY
NAVAL FACILITIES ENGINEERING COMMAND
NAVAL FACILITIES ENGINEERING COMMAND
MARINE CORPS BASE – QUANTICO
QUANTICO, VA
P-635 ASP EXPANSION
DOOR SCHEDULE

SCALE: N/A
EPROJECT NO.: 1312142
CONSTR. CONTR. NO.
NAVFAC DRAWING NO. 13072325
SHEET 109 OF 201
A-502

DRAWFORM REVISION: 10 MARCH 2009

FILE NAME: C:\pwworking\ghna\tanudjih\d0751228\BLDG635-1312142-A502.dwg LAYOUT NAME: Layout1 PLOTTED: Monday, June 08, 2015 – 11:17am USER: tanudjih

DOOR TYPES

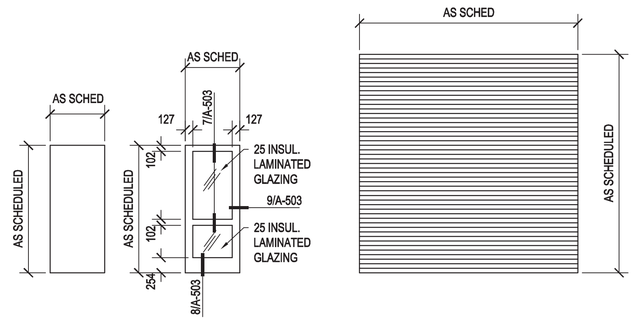

THRESHOLD DETAILS

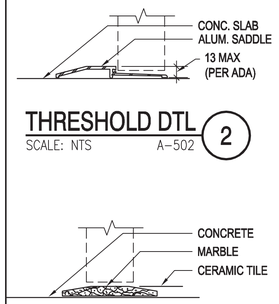

THRESHOLD DTL (2) SCALE: NTS A-502

THRESHOLD DTL (1) SCALE: NTS A-503

DOOR DETAILS

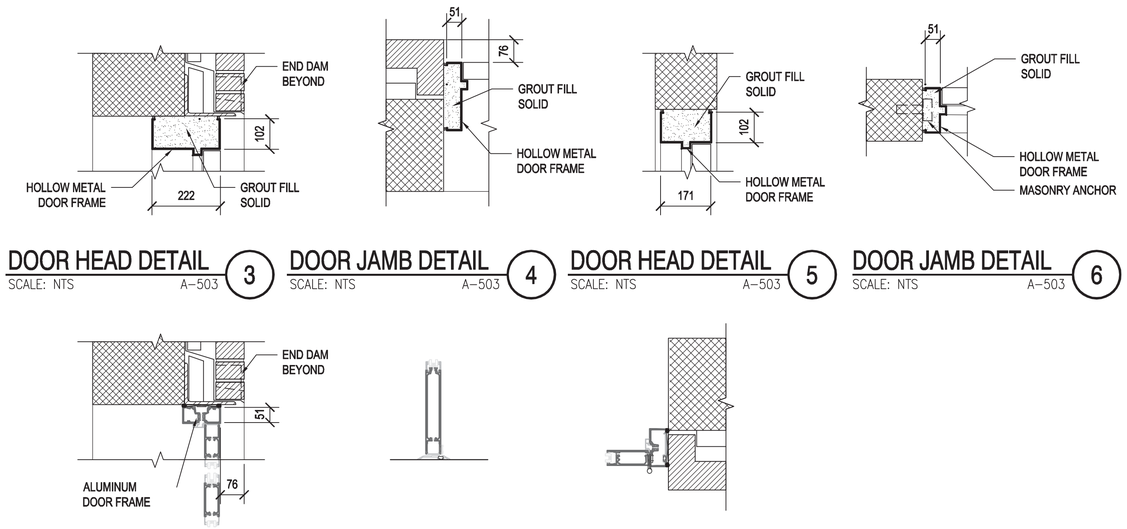

DOOR HEAD DETAIL (3) SCALE: NTS A-503

DOOR JAMB DETAIL (4) SCALE: NTS A-503

DOOR HEAD DETAIL (5) SCALE: NTS A-503

DOOR JAMB DETAIL (6) SCALE: NTS A-503

DOOR HEAD DETAIL (7) SCALE: NTS A-503

DOOR SILL DETAIL (8) SCALE: NTS A-503

DOOR JAMB DETAIL (9) SCALE: NTS A-503

FRAME TYPES

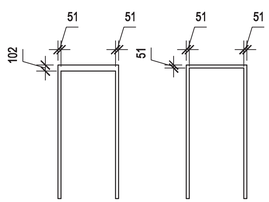

WINDOW TYPES

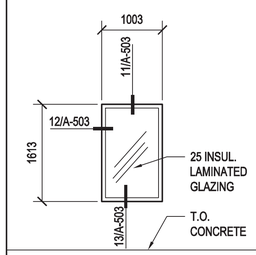

INSULATED GLAZING LAYUP (BEGINS AT OUTSIDE FACE)

THERMALLY TEMPERED	2.92
PVB (ELASTIC-PLASTIC)	1.52
THERMALLY TEMPERED	2.92
AIRGAP	12.7
THERMALLY TEMPERED	5.56

WINDOW DETAILS

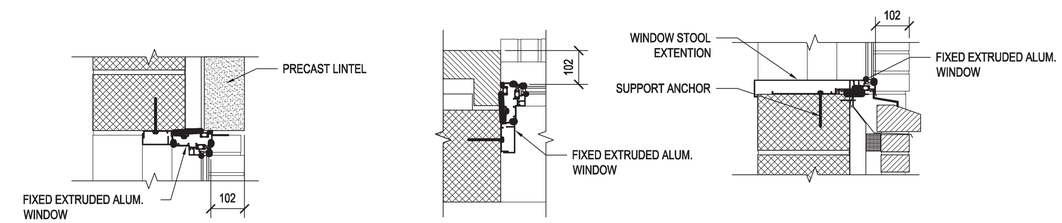

WINDOW HEAD DETAIL (11) SCALE: NTS A-503

WINDOW JAMB DETAIL (12) SCALE: NTS A-503

WINDOW SILL DETAIL (13) SCALE: NTS A-503

THRESHOLD DETAILS

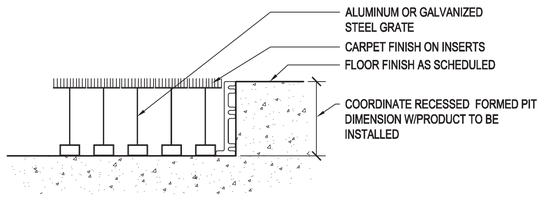

RECESSED ENTRY GRID MAT (14) SCALE: NTS A-503

SYM	DESCRIPTION	DATE	APPR

NAVFAC

COMMONWEALTH OF VIRGINIA 6-10-15 STEVEN JAMES WOODYATT Lic. No. 11711 ARCHITECT

SEAL

JACOBS
1100 NORTH GLEBE ROAD SUITE 500
ARLINGTON, VIRGINIA 22201
TEL (571) 218-1000 FAX (571) 218-1600
A/E INFO

APPROVED
FOR COMMANDER NAVFAC 18 June 2015
ACTIVITY
SATISFACTORY TO DATE 15 May 2015
DES SW DRW JS CHK SW
<<PM/DM>>
BRANCH MANAGER MS
CHIEF ENG/ARCH THC
FIRE PROTECTION KTD

DEPARTMENT OF THE NAVY
NAVAL FACILITIES ENGINEERING COMMAND
NAVAL FACILITIES ENGINEERING COMMAND
MARINE CORPS BASE – QUANTICO
QUANTICO, VA
P-635 ASP EXPANSION
DOOR, WINDOW TYPES & DETAILS

SCALE: N/A
EPROJECT NO.: 1312142
CONSTR. CONTR. NO.
NAVFAC DRAWING NO. 13072326
SHEET 110 OF 201
A-503

DRAWFORM REVISION: 10 MARCH 2009

FILE NAME: C:\pwworking\gbno\\tonudjh\d0751228\BLD0635-1312142-A503.dwg LAYOUT NAME: Layout1 PLOTTED: Monday, June 08, 2015 - 11:17am USER: tonudjh

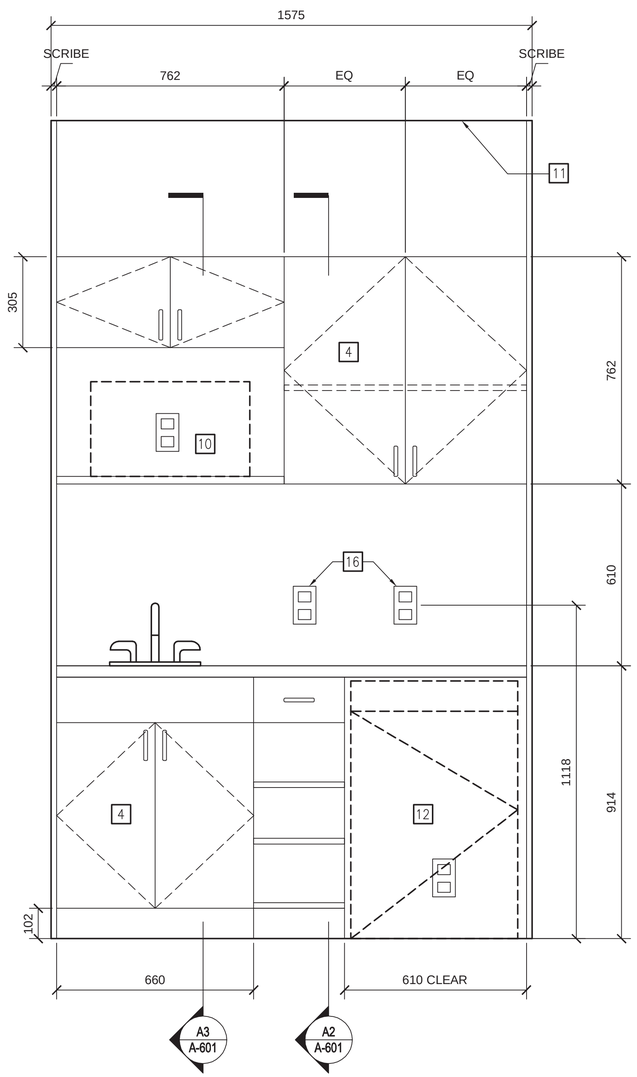

ELEVATION

SCALE: 1:10 A-601 A1

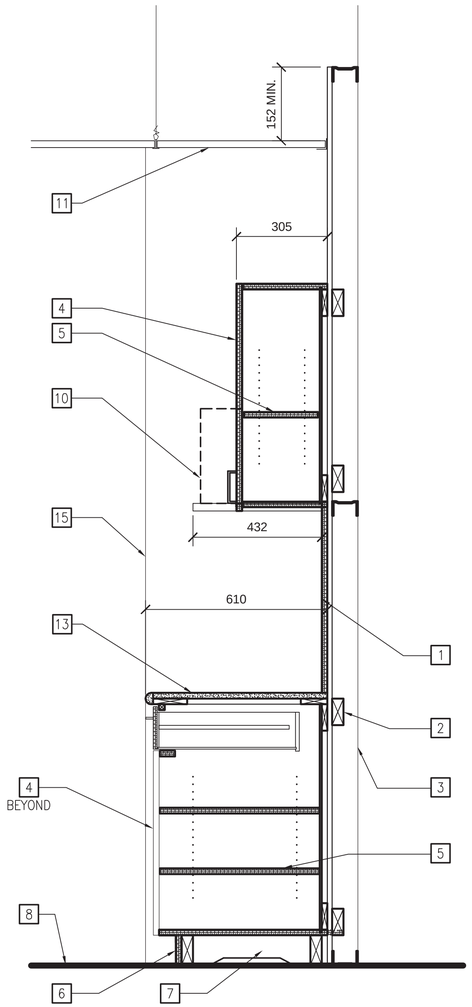

SECTIONS

SCALE: 1:10 A-601 A2

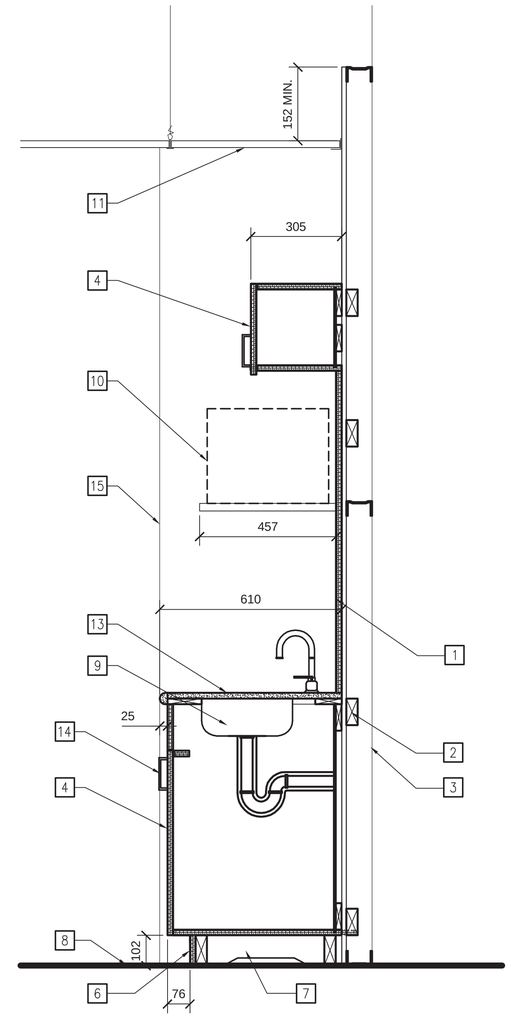

SECTIONS

SCALE: 1:10 A-601 A3

0 100 200 400 MILLIMETER

SCALE: 1:10

GENERAL NOTES

1. REFER TO DRAWING G-005 FOR GENERAL NOTES, ABBREVIATIONS, SYMBOLS, ETC.
2. IF DIMENSIONS CONFLICT, BRING CONFLICT TO ATTENTION OF THE COR PRIOR TO PROCEEDING WITH CONSTRUCTION.

KEY NOTES

1. FULL HEIGHT BACKSPLASH (PL-1)
2. WOOD BLOCKING AT ALL WALL-MOUNTED ELEMENTS
3. SCHEDULED PARTITION
4. PLYWOOD CABINET DOOR W/PLASTIC LAMINATE
5. ADJUSTABLE SHELVES ON RECESSED SUPPORT STANDARDS, WOOD
6. 102mm RUBBER BASE AS SCHEDULED
7. WOOD STRETCHERS
8. FINISHED FLOOR AS SCHEDULED
9. UNDER-MOUNT SINK
10. MICROWAVE (N.I.C.)
11. SCHEDULED CEILING
12. UNDER-COUNTER REFRIGERATOR BY OTHERS
13. SOLID SURFACE COUNTER-TOP W/BULLNOSE EDGE
14. 102mm WIRE PULLS, SATIN CHROME.
15. CMU PARTITION BEYOND
16. GFI ELECTRICAL OUTLET

SYM	DESCRIPTION	DATE	APPR

NAVFAC

COMMONWEALTH OF VIRGINIA
6-10-15
STEVEN JAMES WOODYATT
Lic. No. 11711
ARCHITECT
SEAL

JACOBS
1100 NORTH GLEBE ROAD SUITE 500
ARLINGTON, VIRGINIA 22201
TEL (571) 218-1000 FAX (571) 218-1600
A/E INFO

APPROVED
FOR COMMANDER NAVFAC 18 June 2015
ACTIVITY
SATISFACTORY TO DATE 15 May 2015
DES SW DRW JS CHK SW
<<CPM/CMD>>
BRANCH MANAGER MS
CHIEF ENG/ARCH THC
FIRE PROTECTION KTD

DEPARTMENT OF THE NAVY
NAVAL FACILITIES ENGINEERING COMMAND
NAVAL FACILITIES ENGINEERING COMMAND
MARINE CORPS BASE – QUANTICO
QUANTICO, VA
P-635 ASP EXPANSION
MILLWORK DETAILS

SCALE: 1:50
EPROJECT NO.: 1312142
CONSTR. CONTR. NO.
NAVFAC DRAWING NO. 13072327
SHEET 111 OF 201
A-601

DRAWFORM REVISION: 10 MARCH 2009

FILE NAME: C:\pwworking\gbno\tanudjih\d0751228\BLDG635-1312142-A601.dwg LAYOUT NAME: Layout1 PLOTTED: Monday, June 08, 2015 - 11:18am USER: tanudjih

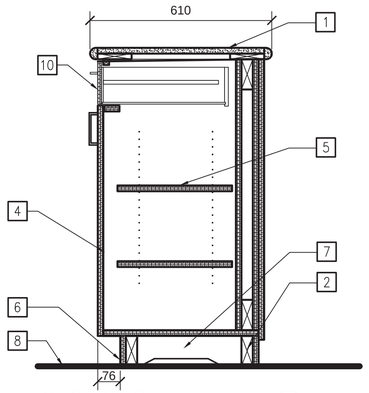

SECTIONS C1
SCALE: 1:10 A-602

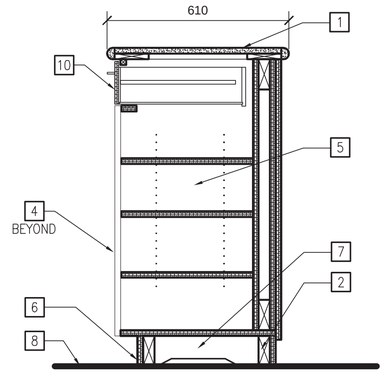

SECTIONS C2
SCALE: 1:10 A-602

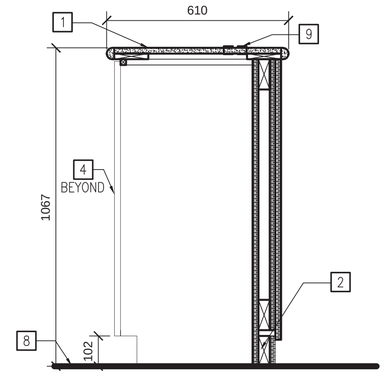

SECTIONS C3
SCALE: 1:10 A-602

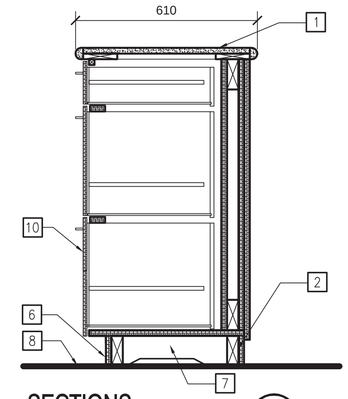

SECTIONS C4
SCALE: 1:10 A-602

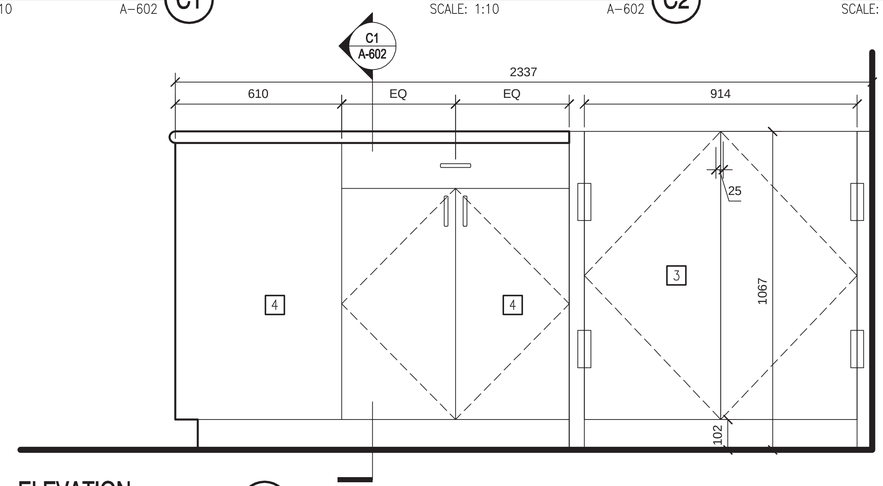

ELEVATION B1
SCALE: 1:10 A-602

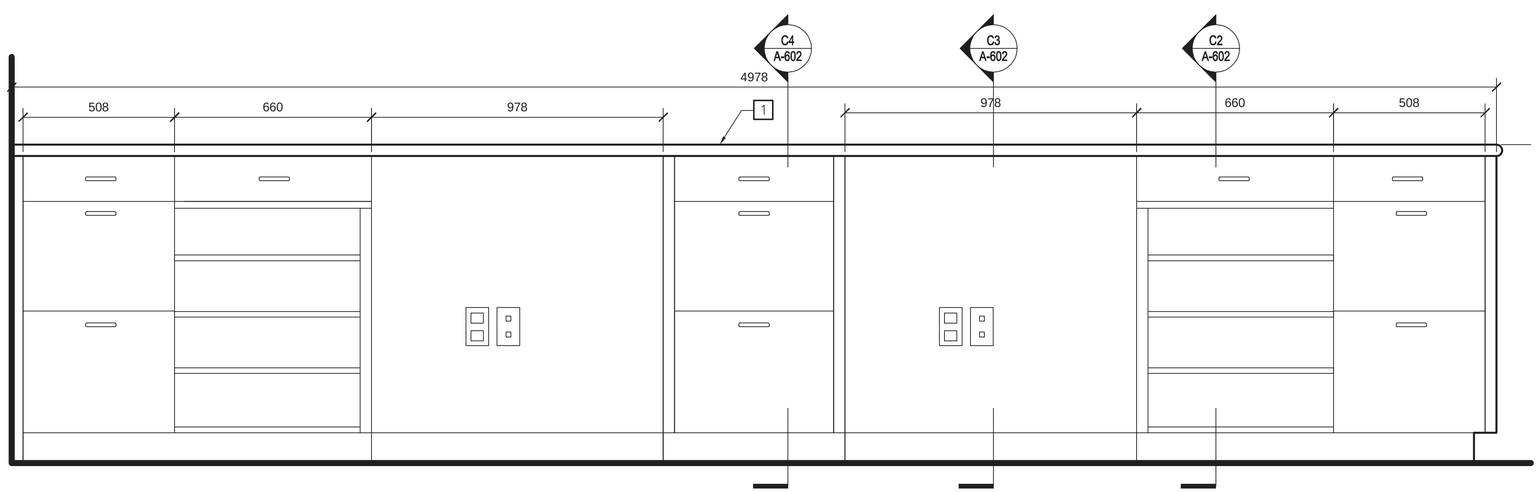

ELEVATION A1
SCALE: 1:10 A-602

0 100 200 400 MILLIMETER
SCALE: 1:10

GENERAL NOTES

1. REFER TO DRAWING G-005 FOR GENERAL NOTES, ABBREVIATIONS, SYMBOLS, ETC.
2. IF DIMENSIONS CONFLICT, BRING CONFLICT TO ATTENTION OF THE COR PRIOR TO PROCEEDING WITH CONSTRUCTION.

KEY NOTES

1. SOLID SURFACE COUNTER TOP (SS-1) WITH BULLNOSE EDGE
2. WOOD BLOCKING
3. DOUBLE SWING SOLID WOOD GATE, PTD. TO MATCH MILLWORK
4. PLYWOOD CABINET DOOR, PL-1
5. ADJUSTABLE SHELVES
6. 102mm PLAM OVER PLYWOOD BASE
7. WOOD STRETCHERS
8. FINISHED FLOOR AS SCHEDULED
9. GROMMETS, 75mm DIA., BLACK
10. SOLID WOOD DRAWERS

SYM	DESCRIPTION	DATE	APPR

NAVFAC

COMMONWEALTH OF VIRGINIA
6-10-15
STEVEN JAMES WOODYATT
Lic. No. 11711
ARCHITECT
SEAL

JACOBS
1100 NORTH GLEBE ROAD SUITE 500
ARLINGTON, VIRGINIA 22201
TEL (571) 218-1000 FAX (571) 218-1600
A/E INFO

APPROVED
FOR COMMANDER NAVFAC 18 June 2015
ACTIVITY
Signed by email 18 May 2015
SATISFACTORY TO DATE
DES SW DRW JS CHK SW
<<PM/DM>>
BRANCH MANAGER MS
CHIEF ENG/ARCH THC
FIRE PROTECTION KTD

DEPARTMENT OF THE NAVY
NAVAL FACILITIES ENGINEERING COMMAND
NAVAL FACILITIES ENGINEERING COMMAND
MARINE CORPS BASE - QUANTICO
QUANTICO, VA
P-635 ASP EXPANSION
TRANSACTION COUNTER ELEVATIONS & SECTIONS

SCALE: 1:50
EPROJECT NO.: 1312142
CONSTR. CONTR. NO.
NAVFAC DRAWING NO. 13072328
SHEET 112 OF 201
A-602

DRAWFORM REVISION: 10 MARCH 2009

FILE NAME: C:\pwworking\pbna\jonudjih\d0751228\BLD0635-1312142-A602.dwg LAYOUT NAME: Layout1 PLOTTED: Monday, June 08, 2015 - 11:18am USER: jonudjih

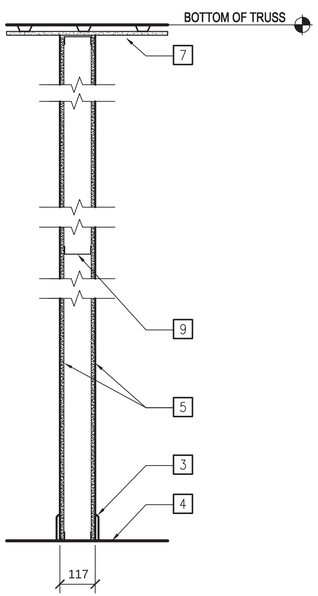

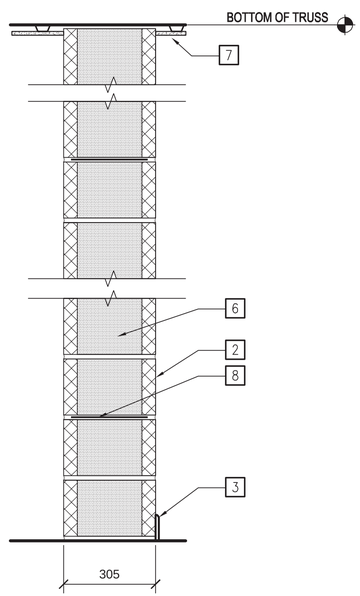

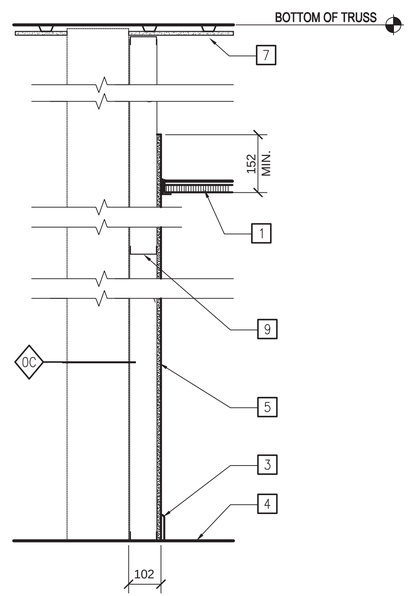

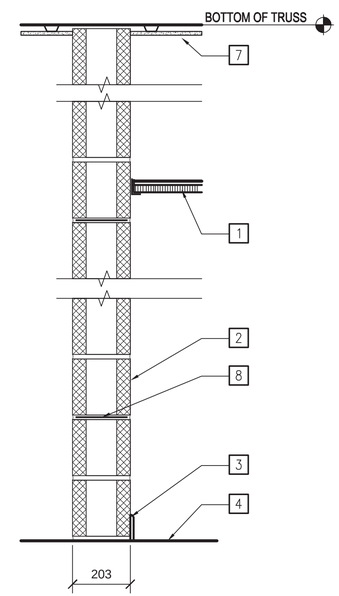

0D 117 PARTITION		SCALE: NTS
FIRE RATING: N/A	DESIGN: N/A	
STC RATING: N/A	TEST NO.: N/A	

0C 305 CMU WALL		SCALE: NTS
FIRE RATING: N/A	DESIGN: N/A	
STC RATING: N/A	TEST NO.: N/A	

0B 102 FURRING PARTITION		SCALE: NTS
FIRE RATING: N/A	DESIGN: N/A	
STC RATING: N/A	TEST NO.: N/A	

0A 203 CMU WALL		SCALE: NTS
FIRE RATING: N/A	DESIGN: N/A	
STC RATING: N/A	TEST NO.: N/A	

GENERAL NOTES

1. REFER TO DRAWING G-005 FOR GENERAL NOTES, ABBREVIATIONS, SYMBOLS, ETC.
2. IF DIMENSIONS CONFLICT, BRING CONFLICT TO ATTENTION OF THE COR PRIOR TO PROCEEDING WITH CONSTRUCTION.

KEY NOTES

1. SCHEDULED CEILING
2. CMU
3. SCHEDULED BASE
4. SCHEDULED FLOOR FINISH
5. 16mm GYPSUM WALL BOARD
6. FOAM INSULATION, FULL-HEIGHT, ALL CELLS
7. MOISTURE RESISTANT GWB CEILING @ BOTTOM OF TRUSS ON 38mm METAL HAT CHANNELS AT 406mm O.C. , 4226mm TO UNDERSIDE
8. LADDER-TYPE, HORIZONTAL MASONRY REINFORCEMENT, 610mm O.C.
9. 92mm METAL STUDS (30 MIL), 406mm O.C.

SYM	DESCRIPTION	DATE	APPR

NAVFAC

COMMONWEALTH OF VIRGINIA
6-10-15
STEVEN JAMES WOODYATT
Lic. No. 11711
ARCHITECT
SEAL

JACOBS
1100 NORTH GLEBE ROAD SUITE 500
ARLINGTON, VIRGINIA 22201
TEL (571) 218-1000 FAX (571) 218-1600
A/E INFO

APPROVED
FOR COMMANDER NAVFAC 16 June 2015
ACTIVITY
SATISFACTORY TO DATE 15 May 2015
DES SW DRW JS CHK SW
<<PM/DM>>
BRANCH MANAGER MS
CHIEF ENG/ARCH THC
FIRE PROTECTION KTD

DEPARTMENT OF THE NAVY
NAVAL FACILITIES ENGINEERING COMMAND
NAVAL FACILITIES ENGINEERING COMMAND
MARINE CORPS BASE - QUANTICO
QUANTICO, VA
P-635 ASP EXPANSION
PARTITION TYPES

SCALE: 1:50
EPROJECT NO.: 1312142
CONSTR. CONTR. NO.
NAVFAC DRAWING NO. 13072329
SHEET 113 OF 201
A-701
DRAWFORM REVISION: 10 MARCH 2009

FILE NAME: C:\pwworking\gbno\tanudjih\d0751228\BLDG635-1312142-A701.dwg LAYOUT NAME: Layout1 PLOTTED: Monday, June 08, 2015 - 11:18am USER: tanudjih

FURNITURE SCHEDULE

TAG NO.	DESCRIPTION	SIZE (IN)	FINISH(ES)	REMARKS
WS-1	FREE STANDING DESK	5'-0" x 5'-0"	Graphite Walnut Laminate, Low Gloss Black Paint, Frosted Glass	INCLUDES MODESTY PANEL & PRIVACY SCREEN
C-1	TASK CHAIR	27"W x 24-3/4"D x 43-1/2"H	Black, Knit Back - Licorice, Seat/Playground - Huckleberry	SOFT CASTERS
C-2	STOOL	27"W x 24-3/4"D x 59"H	Black, Knit Back - Licorice, Seat/Playground - Huckleberry	SOFT CASTERS
C-3	SIDE CHAIR	23-7/8"W x 21-1/4"D x 30-1/4"H	Black, Seat/Back - Buzz2 Black	
T-1	SIDE TABLE	20"W x 20"D x 20"H	Silver Frame & Black Laminate Top	
WB-1	WASTE BASKET	9"W x 12.9"D x 15"H	Black	21 qt.
WB-2	PANTRY WASTE BASKET	20"W x 11"D x 30"H	Black	30 gallons
MWB-1	MAGNETIC WHITEBOARD LG	32" x 45.5"	White with Satin Anodized Aluminum Frame	COORDINATE INSTALL WITH USG
MWB-2	MAGNETIC WHITEBOARD SM	2' x 3'	White with Satin Anodized Aluminum Frame	COORDINATE INSTALL WITH USG
LF-1	LATERAL FILE CABINET	36"W x 18"D x 65.5"H	Low Gloss Black Paint finish	
PRINTER	MULTI-FUNCTION PRINTER	N/A	N/A	USG FURNISHED
SHRED	SHREDDER	N/A	N/A	USG FURNISHED
S-1	DESK SIGNAGE	2"H x 8.5"L x 9/32"D	Satin Aluminum Finish, Clear protective Layer	MAGNETIC MOUNT
S-2	RESTROOM SIGNAGE	9"H X 6"w X 1/8"THICK	Back - Black, Text - White	ADA COMPLIANT MOUNTING HEIGHT
UCR-1	UNDER THE COUNTER REFRIGERATOR	20.69"W x 20.88"D x 32.69"H	Black	4.4 Cu. Ft. Energy Star

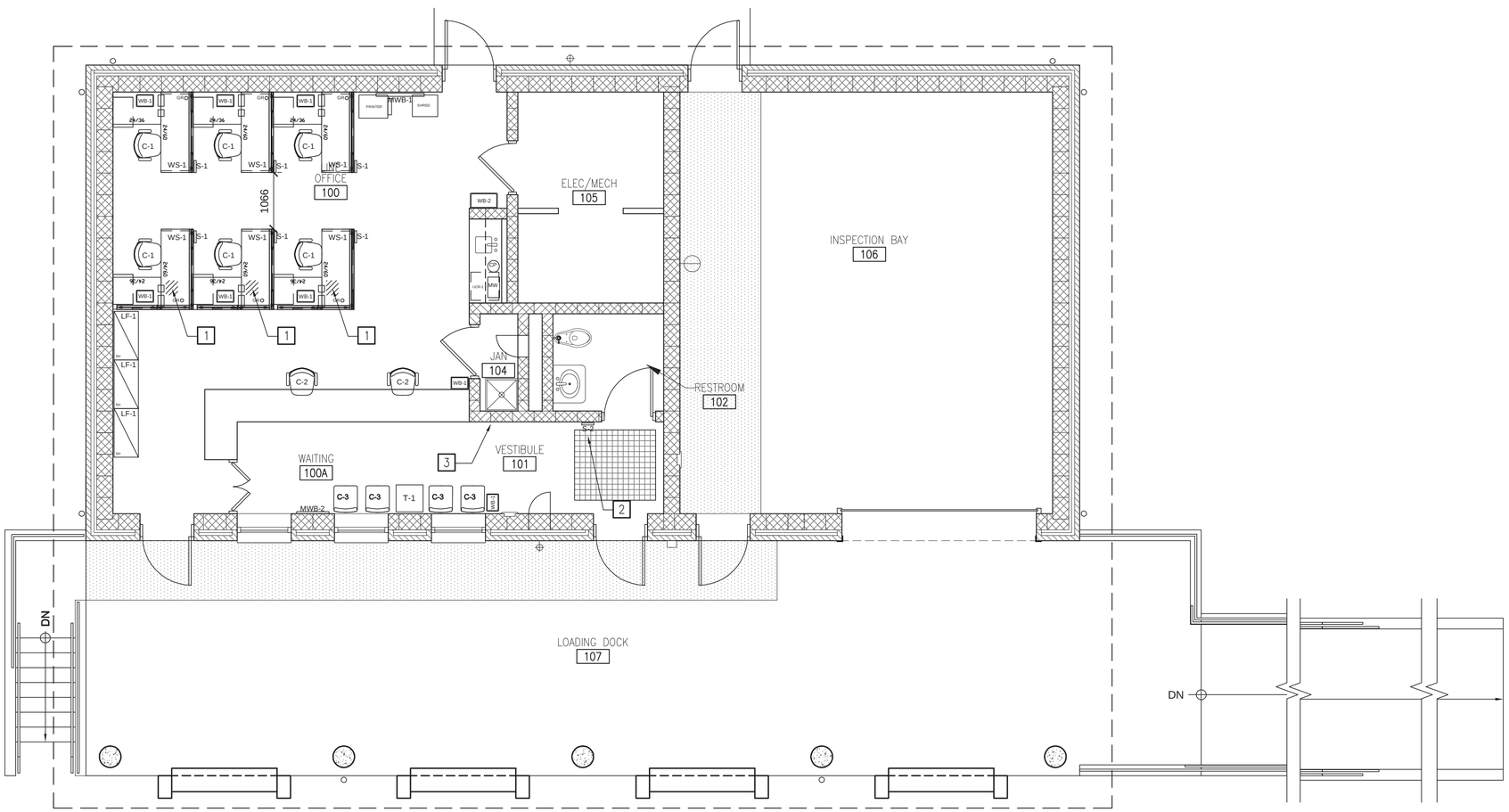

FURNITURE FLOOR PLAN

SCALE: 1:50

0 500 1000 2000 MILLIMETER

SCALE: 1:50

GENERAL NOTES

1. REFER TO DRAWING G-005 FOR GENERAL NOTES, ABBREVIATIONS, SYMBOLS, ETC.
2. IF DIMENSIONS CONFLICT, BRING CONFLICT TO ATTENTION OF THE COR PRIOR TO PROCEEDING WITH CONSTRUCTION.
3. AS THE BASIS OF DESIGN, ALL FURNITURE AND EQUIPMENT ARE SHOWN FOR REFERENCE PURPOSES ONLY.

KEY NOTES

1. COORDINATE LOCATION OF RECESSED FLOOR POWER/DATA OUTLET
2. UNISEX RESTROOM SIGNAGE
3. FUTURE TV LOCATION

FOR INFORMATION ONLY

SYM	DESCRIPTION	DATE	APPR

NAVFAC

SEAL

JACOBS
1100 NORTH GLEBE ROAD SUITE 500
ARLINGTON, VIRGINIA 22201
TEL (571) 218-1000 FAX (571) 218-1600
A/E INFO

APPROVED
FOR COMMANDER NAVFAC 18 June 2015
ACTIVITY
SATISFACTORY TO DATE 15 May 2015
DES SW DRW JS CHK SW
<<PM/DM>>
BRANCH MANAGER MS
CHIEF ENG/ARCH THC
FIRE PROTECTION KTD

DEPARTMENT OF THE NAVY
NAVAL FACILITIES ENGINEERING COMMAND
NAVAL FACILITIES ENGINEERING COMMAND
MARINE CORPS BASE - QUANTICO
QUANTICO, VA
P-635 ASP EXPANSION
FURNITURE PLAN

SCALE: 1:50
EPROJECT NO.: 1312142
CONSTR. CONTR. NO.
NAVFAC DRAWING NO. 13072330
SHEET 114 OF 201
I-101

DRAWFORM REVISION: 10 MARCH 2009

FILE NAME: C:\pwworking\gbno\cmudjh\d0751230\BLD0635-1312142-I101.dwg LAYOUT NAME: Layout1 PLOTTED: Tuesday, June 09, 2015 - 3:01pm USER: fcmudjh

GENERAL

1. TAKE CARE TO ENSURE THE INTEGRITY OF THE STRUCTURE AND SAFETY OF WORKERS DURING ALL PHASES OF CONSTRUCTION.

2. THE GENERAL CONTRACTOR IS RESPONSIBLE FOR COORDINATION OF ALL REVISIONS TO THE STRUCTURAL SYSTEM AS A RESULT OF ACCEPTANCE OF CONTRACTOR-PROPOSED ALTERNATIVES OR SUBSTITUTIONS.

3. SCALES SHOWN ON THE DRAWINGS ARE FOR GENERAL INFORMATION ONLY. DIMENSIONAL INFORMATION SHALL NOT BE OBTAINED BY MEASURING OFF THE DRAWINGS.

4. THE GENERAL CONTRACTOR SHALL HIRE A SUBCONTRACTOR TO PROVIDE TESTING FOR ALL NEW CONCRETE WORK.

5. ELEVATIONS NOTED ON THE STRUCTURAL DRAWINGS ARE BASED ON AN ASSUMED GROUND FLOOR TOP OF SLAB ELEVATION OF 0000. SEE CIVIL FOR ACTUAL TOP OF GROUND FLOOR SLAB ELEVATION (MEAN SEA LEVEL DATUM) EQUATED TO THIS ELEVATION.

6. NOTES ON SHEETS SB-001 AND SB-002 ARE APPLICABLE ONLY TO SB-SHEETS.

DESIGN CODES AND STANDARDS

1. UFC 3-301-01, 1 JUNE 2013

2. 2012 INTERNATIONAL BUILDING CODE (IBC).

3. AMERICAN CONCRETE INSTITUTE'S (ACI) "BUILDING CODE REQUIREMENTS FOR STRUCTURAL CONCRETE" 318-11.

4. AMERICAN INSTITUTE OF STEEL CONSTRUCTION, 13TH EDITION.

5. AMERICAN WELDING SOCIETY 2002 STRUCTURAL WELDING CODE (AWS D1.1).

6. AMERICAN CONCRETE INSTITUTE'S (ACI) "BUILDING CODE REQUIREMENTS AND SPECIFICATION FOR MASONRY STRUCTURES" 530-11.

7. ASCE 7-10 "MINIMUM DESIGN LOADS FOR BUILDINGS AND OTHER STRUCTURES"

DESIGN LOADS

1. RISK CATEGORY (FOR DETERMINATION OF LOADING PARAMETERS) II

2. ROOF DEAD LOADS

ROOF MATERIALS	0.48 kPa
METAL DECK	0.10 kPa
MECHANICAL/ELECTRICAL EQUIPMENT	0.48 kPa
CEILING	0.24 kPa

3. LIVE LOADS

ROOF	0.96 kPa
OFFICE FLOOR	3.11 kPa
LOADING DOCK/INSPECTION BAY FLOOR	5.99 kPa
STAIRS	4.79 kPa

4. SNOW LOAD PARAMETERS

GROUND SNOW LOAD	1.20 kPa
EXPOSURE FACTOR	1.0
THERMAL FACTOR	1.0
IMPORTANCE FACTOR	1.0

5. WIND LOAD PARAMETERS:

BASIC WIND SPEED	51.4 M/S
EXPOSURE	C

6. SEISMIC LOAD PARAMETERS:

Ss	0.130
S1	0.053
SDS	0.139
SD1	0.084
SITE CLASS	D
IMPORTANCE FACTOR	1.0
SEISMIC DESIGN CATEGORY	B
SEISMIC FORCE-RESISTING SYSTEM	ORDINARY REINFORCED MASONRY
RESPONSE MODIFICATION COEFFICIENT, R	2

CONCRETE

1. CONCRETE CONSTRUCTION SHALL BE PERFORMED IN ACCORDANCE WITH "BUILDING CODE REQUIREMENTS FOR REINFORCED CONCRETE", AMERICAN CONCRETE INSTITUTE (ACI) 318.

2. DESIGN IS BASED ON THE FOLLOWING MATERIAL STRENGTHS:

A. 28-DAY CONCRETE CYLINDER STRENGTH	27.5 MPa
B. REINFORCING STEEL	414 MPa
C. WELDED WIRE REINFORCEMENT	448 MPa

3. PROVIDE CONCRETE PROTECTION FOR REINFORCEMENT AS FOLLOWS:

A. CAST AGAINST AND PERMANENTLY EXPOSED TO EARTH	76
B. EXPOSED TO EARTH OR WEATHER WHERE FORMS ARE USED	
NO. 19 BAR AND LARGER	50
NO. 16 BAR AND SMALLER	38
NOT EXPOSED TO WEATHER OR IN CONTACT WITH GROUND	
(1) SLABS AND WALLS	
NO. 35 BAR AND SMALLER	19
(2) BEAMS, GIRDERS, COLUMNS: PRIMARY REINFORCEMENT, TIES, STIRRUPS, SPIRALS	38

4. MAINTAIN FULL THICKNESS FOR DEPRESSED OR SLOPED SLABS UNLESS OTHERWISE NOTED.

5. UNLESS OTHERWISE INDICATED ON PLAN, PROVIDE SAW-CUT CONTRACTION JOINTS IN SLABS-ON-GROUND SPACED 3660 TO 5490 O.C. EACH DIRECTION. SAW-CUT PANELS WITH ASPECT RATIO AS CLOSE TO 1:1 AS PRACTICAL, BUT DO NOT EXCEED 1.5:1.

6. DETAILING OF CONCRETE REINFORCEMENT BARS AND ACCESSORIES SHALL CONFORM TO THE RECOMMENDATIONS OF ACI 315 "DETAILS AND DETAILING OF CONCRETE REINFORCEMENT" AND ACI SP-66 "DETAILING MANUAL". PLACING OF REINFORCING BARS SHALL CONFORM TO THE RECOMMENDATIONS OF ACI 315R "MANUAL OF ENGINEERING AND PLACING DRAWINGS FOR REINFORCED CONCRETE STRUCTURES" AND CRSI "MANUAL OF STANDARD PRACTICE".

7. MIXING, TRANSPORTING, AND PLACING OF CONCRETE SHALL CONFORM TO ACI 301.

8. CONCRETE REINFORCEMENT BARS SHALL BE ASTM A 615, GRADE 60, DEFORMED.

9. WELDED WIRE FABRIC SHALL CONFORM TO ASTM A 1064M. FABRIC SHALL BE SUPPLIED IN FLAT SHEETS. FABRIC SHALL BE LAPPED AT LEAST TWELVE INCHES.

MISCELLANEOUS STEEL

1. MISCELLANEOUS STEEL DETAILING, FABRICATION AND ERECTION SHALL CONFORM TO THE AISC "SPECIFICATION FOR STRUCTURAL STEEL BUILDINGS" THIRTEENTH EDITION AND THE AISC "CODE OF STANDARD PRACTICE FOR STEEL BUILDINGS AND BRIDGES".

2. MATERIALS SHALL CONFORM TO THE STANDARDS LISTED:
   PLATES, ANGLES AND CHANNELS: ASTM A36/A 36M
   COLD-FORMED HSS: ASTM A500/A500M GRADE B
   ANCHOR RODS: ASTM F1554, GRADE 36
   STRUCTURAL BOLTS: ASTM A325/A 325M

3. WELDING SHALL CONFORM TO THE AMERICAN WELDING SOCIETY STANDARD D1.1. ELECTRODES FOR SHOP AND FIELD WELDS SHALL CONFORM TO AWS A5.1 OR AWS A5.5, CLASS E70XX, LOW HYDROGEN.

4. PROVIDE WELDED JOINTS THAT MEET THE REQUIREMENTS FOR A PREQUALIFIED DESIGNATION. FILLET WELDS SHALL BE A MINIMUM SIZE OF 5 AND CONTINUOUS UNLESS OTHERWISE SHOWN BY THE WELD SYMBOL. REMOVE RUN ON AND RUN OFF TABS.

5. ALL STEEL MEMBERS AND CONNECTIONS EXPOSED TO THE WEATHER SHALL BE HOT DIP GALVANIZED. STEEL MEMBERS, FABRICATIONS AND ASSEMBLIES INDICATED ON THE DRAWINGS TO BE GALVANIZED SHALL BE GALVANIZED AFTER FABRICATION BY HOT DIP PROCESS IN ACCORDANCE WITH ASTM A123/A123M. WEIGHT OF ZINC COATING TO CONFORM TO THE REQUIREMENTS SPECIFIED UNDER "WEIGHT OF COATING" IN ASTM A123/A123M. GALVANIZE LINTEL BEAMS.

6. SHEAR STUD CONNECTORS SHALL BE ASTM A108M, GRADE 65.

MASONRY

1. DESIGN IS BASED ON THE FOLLOWING VALUES:

A. STRENGTH AT 28-DAYS:	f'm = 10.3 MPa
B. REINFORCING BAR YIELD STRENGTH:	fy = 414 MPa

2. PROVIDE DEFORMED REINFORCING STEEL BARS CONFORMING TO ASTM A615, GRADE 60. (EXCEPTION: PROVIDE ASTM A 706 AT LOCATIONS INDICATED WHERE WELDING IS REQUIRED. SEE AWS D1.4 FOR WELDING REQUIREMENTS). LAP REINFORCING BARS AS FOLLOWS, UNLESS OTHERWISE NOTED:

#16 BAR AND SMALLER:	610
#19 BAR:	966
#22 BAR:	1321

3. PROVIDE MORTAR CONFORMING TO ASTM C 270M AND IBC TABLE 2105.2.2.1.2.
   A. FOR ALL MASONRY, UNLESS OTHERWISE NOTED: TYPE S
   B. FOR MASONRY BELOW GRADE OR IN CONTACT WITH EARTH: TYPE M

4. PROVIDE FINE GROUT CONFORMING TO ASTM C476 WITH A 28-DAY COMPRESSIVE STRENGTH OF 13.8 MPa.

5. PROVIDE 305 THICK NORMAL WEIGHT UNITS WITH MAXIMUM DENSITY OF 2002 KCM AND A MINIMUM AVERAGE NET-AREA COMPRESSIVE STRENGTH OF 19.3 MPa.

6. MASONRY WALL VERTICAL REINFORCEMENT, UNLESS OTHERWISE NOTED.
   #13 @ 813 O/C
   NON-LOAD BEARING PARTITIONS
   #13 @ 1219 O/C

7. PROVIDE LADDER TYPE MASONRY JOINT REINFORCEMENT CONFORMING TO ASTM A 951, W2.8XW2.8 GALVANIZED, DEFORMED, SPACED NOT MORE THAN 406 OC.

8. PROVIDE A BOND BEAM WITH AT LEAST 2 #16 BARS AT THE TOPS AND BOTTOMS OF WALL OPENINGS. THE BOND BEAM SHALL EXTEND NOT LESS THAN 610 PAST THE OPENING.

9. PROVIDE A CONTINUOUS BOND BEAM WITH AT LEAST 2 #16 BOTTOM BARS AT STRUCTURALLY CONNECTED ROOF LEVEL AND WITHIN 406 OF THE TOPS OF WALLS.

10. GROUT SOLID BRICK AND BLOCK BELOW GRADE.

11. CONTROL JOINTS SHALL NOT BE PROVIDED IN STRUCTURAL CMU WALLS.

12. PROVIDE 1#16 VERTICAL BAR AT EACH END, CORNER AND INTERSECTION OF ALL WALLS.

13. LINTELS SHALL BEAR A MINIMUM OF 203 AT EACH END. FOR CMU WALLS, PROVIDE TWO GROUTED CORES EACH SIDE OF OPENING FULL HEIGHT OF WALL AND REINFORCE EACH WITH 1 #16 VERTICAL BAR EXTENDING FULL HEIGHT. THE FOLLOWING LINTELS MAY BE USED WHEN THE HEAD OF MASONRY OPENING IS BELOW BEARING ELEMENTS BY A MINIMUM DISTANCE OF 75% OF THE LINTEL SPAN, UON:

CLEAR SPAN	CMU LINTELS PER CMU WYTHE	PRE-CAST CONCRETE LINTEL PER CMU WYTHE
0 TO 1219	203 DEEP W/1#16 BOT	203 W/2#13 T&B
>1219 TO 1829	406 DEEP W/1#16 BOT	203 W/2#16 T&B
>1829 TO 2438	406 DEEP W/2#13 BOT	406 W/2#16 T&B
>2438 TO 3658	610 DEEP W/2#16 BOT	406 W/2#19 T&B

CLEAR SPAN DEPTH	STEEL ANGLE LINTEL PER 102 MASONRY WYTHE
0 TO 1219	89 X 89 X 6
>1219 TO 1829	127 X 89 X 8
>1829 TO 2438	127 X 89 X 10
>2438 TO 3658	152 X 89 X 13

14. PLACE MASONRY IN RUNNING BOND LAYOUT PATTERN.

FOUNDATION AND STRUCTURAL EARTHWORK

1. NET ALLOWABLE BEARING PRESSURE: 144 kPa

2. FOUNDATION DESIGN IS BASED ON SUBSURFACE EXPLORATION AND GEOTECHNICAL ENGINEERING ANALYSIS FOR QUANTICO 9635 AMMUNITION SUPPLY POINT EXPANSION MARINE CORPS BASE QUANTICO, VIRGINIA PREPARED BY ECS MID-ATLANTIC, LLC AND DATED JULY 23, 2014.

3. CONTRACTOR SHALL PROIVE AN INDEPENDENT TESTING AGENCY TO VERIFY THE REQUIRED BEARING CONDITION FOR EACH FOUNDATION AND SLAB BEFORE THEY ARE PLACED.

4. DEWATER AS NECESSARY PRIOR TO PLACING CONCRETE.

5. FROST DEPTH: 610

6. BACKFILL BELOW GRADE WALLS WITH SELECT MATERIAL (SAND OR GRAVEL).

SYM	DESCRIPTION	DATE	APPR

NAVFAC

COMMONWEALTH OF VIRGINIA
DANIEL EDWARD RAO
Lic. No. 040337
5/11/15
PROFESSIONAL ENGINEER
SEAL

JACOBS
1100 NORTH GLEBE ROAD SUITE 500
ARLINGTON, VIRGINIA 22201
TEL (571) 218-1000 FAX (571) 218-1600
A/E INFO

APPROVED
FOR COMMANDER NAVFAC 18 June 2015
ACTIVITY
SATISFACTORY TO DATE 18 May 2015

DES	DR	DRW	DR	CHK	KL

<<PM/DM>>	
BRANCH MANAGER	MS
CHIEF ENG/ARCH	THC
FIRE PROTECTION	KJS

DEPARTMENT OF THE NAVY
NAVAL FACILITIES ENGINEERING COMMAND
NAVAL FACILITIES ENGINEERING COMMAND
MARINE CORPS BASE - QUANTICO
QUANTICO, VA
P-635 ASP EXPANSION
GENERAL NOTES

SCALE: N/A
EPROJECT NO.: 1312142
CONSTR. CONTR. NO.
NAVFAC DRAWING NO. 13072331
SHEET 115 OF 201
SB-001

DRAWFORM REVISION: 10 MARCH 2009

FILE NAME: C:\pwworking\gbno\roude\d0751227\BLDG635-1312142-SB001.dwg LAYOUT NAME: Layout1 PLOTTED: Wednesday, May 06, 2015 - 10:27am USER: roude

DELEGATED DESIGN

1. TRUSS DESIGN SHALL CONFORM TO "COLD-FORMED STEEL DESIGN MANUAL (D100-13)," BY THE AMERICAN IRON AND STEEL INSTITUTE (AISI), "NORTH AMERICAN SPECIFICATION FOR THE DESIGN OF COLD-FORMED STEEL STRUCTURAL MEMBERS (AISI S100-12)," "NORTH AMERICAN STANDARD FOR COLD-FORMED STEEL FRAMING – TRUSS DESIGN (AISI S214-12)," AND "CODE OF STANDARD PRACTICE FOR COLD-FORMED STEEL STRUCTURAL FRAMING (AISI S202-11)."

2. TRUSS DRAWINGS, LAYOUTS AND CALCULATIONS SHALL BE SIGNED AND SEALED BY A PROFESSIONAL ENGINEER, REGISTERED IN THE COMMONWEALTH OF VIRGINIA, WITH 5 YEARS OF MINIMUM EXPERIENCE IN SIMILAR TYPE STRUCTURES. SHOP DRAWINGS SHALL INCLUDE THE FOLLOWING MINIMUM INFORMATION: TRUSS PITCH, SPAN, SPACING, GAGE FOR EACH MEMBER, FORCE FOR EACH MEMBER, REACTIONS, AND THE LOCATION OF ANY REQUIRED PERMANENT BRACING. SHOP DRAWINGS ARE TO BE SUBMITTED TO THE COR FOR APPROVAL, PRIOR TO FABRICATION.

3. TRUSS MANUFACTURER TO DESIGN THE ROOF TRUSS SYSTEM TO WITHSTAND ALL HORIZONTAL AND VERTICAL WIND LOADS. TRUSS SYSTEM TO SAFELY TRANSFER AND RESIST ALL LOADS FROM AND TO OTHER SYSTEMS, INCLUDING BUT NOT LIMITED TO: EXTERIOR MASONRY WALLS AND ROOF DIAPHRAGM.

4. PROVIDE TEMPORARY TRUSS BRACING PER THE "DESIGN GUIDE FOR CONSTRUCTION BRACING OF COLD-FORMED STEEL TRUSSES" BY THE LIGHT GAGE STEEL ENGINEERS ASSOCIATION. ALSO, FOLLOW THE PROCEDURES IN THE "FIELD INSTALLATION GUIDE FOR COLD-FORMED STEEL TRUSSES" BY THE LIGHT GAGE STEEL ENGINEERS ASSOCIATION.

5. PERMANENT TRUSS BRACING TO BE PROVIDED BY THE PRE-ENGINEERED TRUSS MANUFACTURER AND TO FOLLOW THE PROVISIONS AS PER THE "DESIGN GUIDE FOR PERMANENT BRACING OF COLD-FORMED STEEL TRUSSES" BY THE LIGHT GAGE STEEL ENGINEERS ASSOCIATION.

6. DESIGN CRITERIA GRAVITY LOADS:

TOP CHORD	
LIVE LOAD	1.44 kPa
DEAD LOAD	0.29 kPa
BOTTOM CHORD	
DEAD LOAD	0.96 kPa

7. DESIGN CRITERIA WITH WIND UPLIFT LOADS:

TOP CHORD	
LIVE LOAD	1.44 kPa
DEAD LOAD	0.29 kPa
BOTTOM CHORD	
DEAD LOAD	0.10 kPa

8. IN ADDITION TO THE BOTTOM CHORD DEAD LOAD ALLOWANCE, DESIGN THE TRUSS FOR SPECIFIC CONCENTRATED LIVE LOADS SUCH AS THE ELECTRICAL TRANSFORMER AND MECHANICAL AIR HANDLING UNIT. COORDINATE WITH OTHER TRADES TO ENSURE THAT THE TRUSSES ARE DESIGNED TO SUPPORT ALL HANGING LOADS.

9. WIND LOADS NORMAL TO TRUSS TOP CHORD: TRUSSES SHALL BE DESIGNED IN ACCORDANCE WITH ASCE 7-10 INCLUDING ALL APPLICABLE LOAD COMBINATIONS.

10. ROOF PLAN LAYOUT SHOWN IN THESE DOCUMENTS IS FOR GRAPHICAL REPRESENTATION ONLY. REFER TO TRUSS MANUFACTURER SUBMITTALS FOR TRUSS PLACEMENT LAYOUT, TRUSS PROFILES AND TRUSS TO TRUSS CONNECTION REQUIREMENTS.

11. ALL TRUSSES TO BE SHOP FABRICATED. FIELD FABRICATION IS PROHIBITED.

12. ALL TRUSS AND BRACING MEMBERS TO BE GALVANIZED METAL STUD STOCK WITH A MINIMUM THICKNESS OF 18 GA.

INSPECTIONS

1. THE CONTRACTOR WILL PROVIDE SPECIAL INSPECTION PER 2012 IBC SECTION 1705 FOR THE FOLLOWING ITEMS:

A. CONCRETE MATERIALS AND PLACEMENT	1705.3
B. REINFORCING STEEL PLACEMENT	1705.3
C. FORMWORK	1705.3
D. STEEL FABRICATION	1705.2
E. STEEL MATERIALS	1705.2
F. MASONRY	1705.4

POST-INSTALLED ANCHORS

1. ANCHOR RODS FOR ADHESIVE ANCHORS SHALL BE A36M OR A307M THREADED RODS INSTALLED WITH HILTI HIT ADHESIVE ANCHORING SYSTEM OR APPROVED EQUAL. SEE DRAWINGS FOR ANCHOR DIAMETER AND EMBEDMENT DEPTH.

2. CONCRETE AND GROUTED MASONRY: HILTI HIT-HY 200 ADHESIVE ANCHORS OR APPROVED EQUAL.

3. HOLLOW MASONRY – HILTI HIT-HY 70 ADHESIVE ANCHORS OR APPROVED EQUAL.

METAL DECK

1. PROVIDE GALVANIZED METAL ROOF DECK WITH THE FOLLOWING MINIMUM PROPERTIES:

38 DEEP, 20 GAGE	
DESIGN THICKNESS:	0.91
MOMENT OF INERTIA:	289,507 MM^4/M
POSITIVE SECTION MODULUS:	12,580 MM^3/M
NEGATIVE SECTION MODULUS:	13,280 MM^3/M
MINIMUM YIELD STRESS:	345 MPa

2. ROOF DECK SHALL BE CONTINUOUS OVER 3 SPANS.

3. ANCHOR DECK TO EVERY STRUCTURAL STEEL SUPPORT WITH #12 TEK SCREWS AND SIDE LAPS WITH #10 TEK SCREWS.
   A. #12 TEK SUPPORT ANCHOR PATTERN: 36/5
   B. #10 SIDE LAP FASTENERS: 6 PER SPAN

4. FABRICATE RIDGE PLATES FROM 18 GAGE SHEET OF SAME METAL AND FINISH AS FOR ROOF DECK UNITS.

STRUCTURAL ABBREVIATIONS

ADDL	ADDITIONAL
BLDG	BUILDING
BOD	BOTTOM OF DECK
BRCG	BRACING
BTWN	BETWEEN
CJ	CONSTRUCTION OR CONTRACTION JOINT
CL	CENTER LINE
CONN	CONNECTION
CONT	CONTINUOUS
COR	CONTRACTING OFFICER'S REPRESENTATIVE
DIA	DIAMETER
EE	EACH END
EF	EACH FACE
EJ	EXPANSION JOINT
EL	ELEVATION
EW	EACH WAY
FDN	FOUNDATION
FTG	FOOTING
GALV	GALVANIZED
HCA	HEADED CONCRETE ANCHORS
IF	INSIDE FACE
KCM	KILOGRAM PER CUBIC METER
LG	LONG
LLH	LONG LEG HORIZONTAL
LLV	LONG LEG VERTICAL
LL	LIVE LOAD
LP	LOW POINT
LSH	LONG SIDE HORIZONTAL
LWC	LIGHT WEIGHT CONCRETE
Ld	REINFORCEMENT DEVELOPMENT LENGTH
MFR	MANUFACTURER
NF	NEAR FACE
OC	ON CENTER
OH	OPPOSITE HAND
OF	OUTSIDE FACE
PL	PLATE
REINF	REINFORCEMENT
SOG	SLAB ON GROUND
SPA	SPACE
T&B	TOP AND BOTTOM
TOC	TOP OF CONCRETE
TOF	TOP OF FOOTING
TOS	TOP OF STEEL
TOW	TOP OF WALL
TYP	TYPICAL
UON	UNLESS OTHERWISE NOTED
VIF	VERIFY IN FIELD
WWF	WELDED WIRE FABRIC

SYMBOLS

SLOPE — INDICATES SLOPED SURFACE, ARROW POINTS IN DIRECTION OF LOWER ELEVATION

[-900] — BRACKETED NEGATIVE ELEVATION USED TO EMPHASIZE ELEVATIONS BELOW 000

CUTAWAY USED TO SHOW ELEMENTS BEYOND A SOLID SURFACE, SUCH AS THE FLANGE OR WEB OF A STEEL BEAM

MASONRY VENEER

CONCRETE

CONCRETE MASONRY

EARTH

SYM	DESCRIPTION	DATE	APPR

NAVFAC

COMMONWEALTH OF VIRGINIA
DANIEL EDWARD RAO
Lic. No. 040337
5/11/15
PROFESSIONAL ENGINEER
SEAL

JACOBS
1100 NORTH GLEBE ROAD SUITE 500
ARLINGTON, VIRGINIA 22201
TEL (571) 218-1000 FAX (571) 218-1600
A/E INFO

APPROVED
FOR COMMANDER NAVFAC 18 June 2015
ACTIVITY
SATISFACTORY TO DATE 15 May 2015

DES	DR	DRW DR	CHK KL
<<PM/DM>>			
BRANCH MANAGER		MS	
CHIEF ENG/ARCH		THC	
FIRE PROTECTION		KJS	

DEPARTMENT OF THE NAVY
NAVAL FACILITIES ENGINEERING COMMAND
NAVAL FACILITIES ENGINEERING COMMAND
MARINE CORPS BASE – QUANTICO
QUANTICO, VA
P-635 ASP EXPANSION
GENERAL NOTES, SYMBOLS AND ABBREVIATIONS

SCALE: N/A
EPROJECT NO.: 1312142
CONSTR. CONTR. NO.
NAVFAC DRAWING NO. 13072332
SHEET 116 OF 201
SB-002

DRAWFORM REVISION: 10 MARCH 2009

FILE NAME: C:\pwworking\ghno\vaudk\d0751227\BLD0635-1312142-SB002.dwg LAYOUT NAME: Layout1 PLOTTED: Wednesday, May 06, 2015 - 10:27am USER: raude

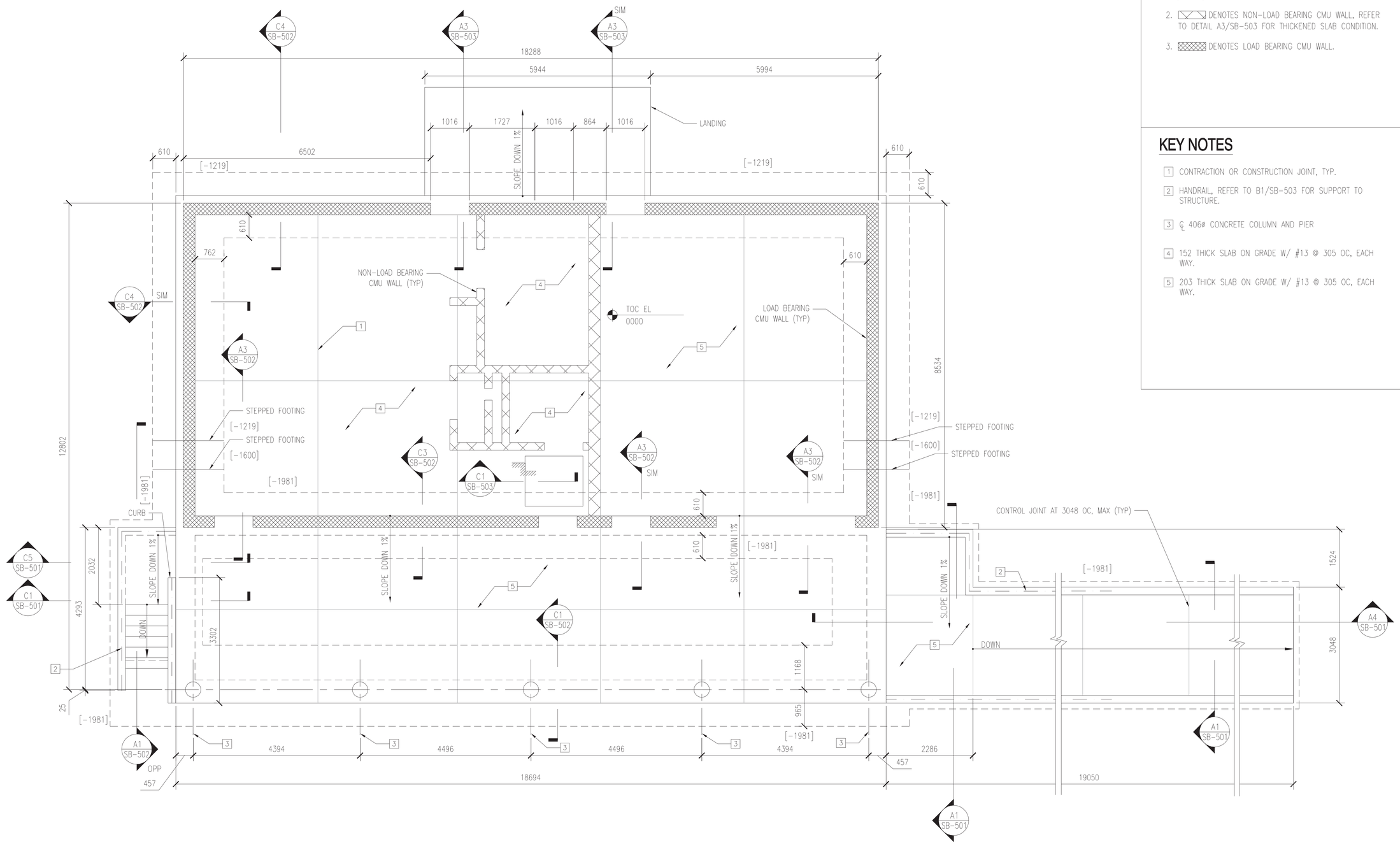

FOUNDATION/FIRST FLOOR PLAN

SCALE: 1:50

PLAN NORTH

GRAPHIC SCALES:

0 1 2 3 4 5m

SCALE: 1:50

GENERAL NOTES

1. [-0000] DENOTES TOP OF FOOTING EL.
2. DENOTES NON-LOAD BEARING CMU WALL, REFER TO DETAIL A3/SB-503 FOR THICKENED SLAB CONDITION.
3. DENOTES LOAD BEARING CMU WALL.

KEY NOTES

1. CONTRACTION OR CONSTRUCTION JOINT, TYP.
2. HANDRAIL, REFER TO B1/SB-503 FOR SUPPORT TO STRUCTURE.
3. ℄ 406ø CONCRETE COLUMN AND PIER
4. 152 THICK SLAB ON GRADE W/ #13 @ 305 OC, EACH WAY.
5. 203 THICK SLAB ON GRADE W/ #13 @ 305 OC, EACH WAY.

SYM	DESCRIPTION	DATE	APPR

NAVFAC

COMMONWEALTH OF VIRGINIA
DANIEL EDWARD RAO
Lic. No. 040337
5/11/15
PROFESSIONAL ENGINEER

SEAL

JACOBS
1550 NORTH GLEBE ROAD SUITE 500
ARLINGTON, VIRGINIA 22201
TEL (571) 218-1000 FAX (571) 218-1600
A/E INFO

APPROVED
FOR COMMANDER NAVFAC 18 June 2015

ACTIVITY
SATISFACTORY TO DATE 15 May 2015

DES	DR	DRW	DR
CHK	KL		

<<GPM/DM>>
BRANCH MANAGER MS
CHIEF ENG/ARCH THC
FIRE PROTECTION KJS

DEPARTMENT OF THE NAVY
NAVAL FACILITIES ENGINEERING COMMAND
NAVAL FACILITIES ENGINEERING COMMAND
MARINE CORPS BASE – QUANTICO
QUANTICO, VA
P-635 ASP EXPANSION
FOUNDATION/FIRST FLOOR PLAN

SCALE: AS NOTED
EPROJECT NO.: 1312142
CONSTR. CONTR. NO.
NAVFAC DRAWING NO. 13072333
SHEET 117 OF 201
SB-101

DRAWFORM REVISION: 10 MARCH 2009

FILE NAME: C:\pwworking\ghno\raude\d0751227\BLDG635-1312142-SB101.dwg LAYOUT NAME: Layout1 PLOTTED: Wednesday, May 06, 2015 - 10:27am USER: raude

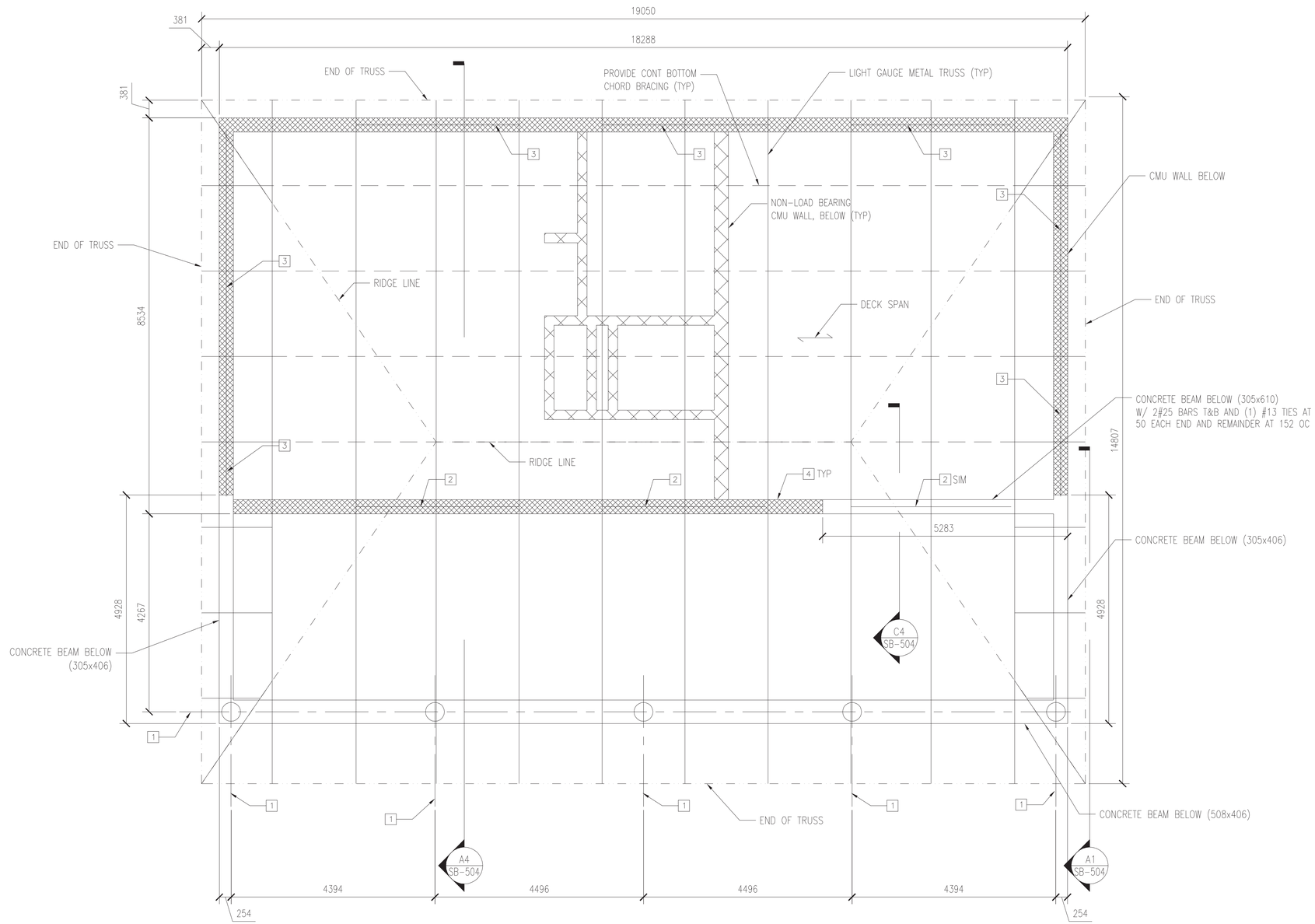

ROOF FRAMING PLAN

SCALE: 1:50

PLAN NORTH

GENERAL NOTES

1. WALLS ARE 305 CMU LOAD BEARING WALLS. PROVIDE CONNECTION TO ROOF TRUSSES TO SUFFICIENTLY TRANSFER UPLIFT AND LATERAL LOADS.
2. ROOF CONSTRUCTION CONSISTS OF 38 METAL DECK SUPPORTED BY LIGHT GAUGE METAL TRUSSES SPACED AT MAXIMUM 1829 ON CENTER. THE ROOF DECK SHALL BE FASTENED TO THE ROOF TRUSSES FOR A MINIMUM DIAPHRAGM SHEAR OF 7.3 KN/M.
3. DENOTES NON-LOAD BEARING CMU WALL.
4. DENOTES LOAD BEARING CMU WALL.

KEY NOTES

1. ℄ CONCRETE COLUMN
2. TRUSS SHEAR BRACING, REFER TO DETAIL C1/SB504
3. TRUSS SHEAR BLOCKING, REFER TO DETAIL C3/SB504
4. LOAD-BEARING CMU WALL BELOW, TOW EL 4267

GRAPHIC SCALES:

0 1 2 3 4 5m

SCALE: 1:50

SYM	DESCRIPTION	DATE	APPR

NAVFAC

COMMONWEALTH OF VIRGINIA
DANIEL EDWARD RAU
Lic. No. 040337
5/11/15
PROFESSIONAL ENGINEER

SEAL

JACOBS
1100 NORTH GLEBE ROAD SUITE 500
ARLINGTON, VIRGINIA 22201
TEL (571) 218-1000 FAX (571) 218-1600
A/E INFO

APPROVED
FOR COMMANDER NAVFAC 18 June 2015

ACTIVITY
SATISFACTORY TO DATE Signed by email 18 May 2015

DES	DR	DRW	DR	CHK	KL
<<PM/DM>>					
BRANCH MANAGER					MS
CHIEF ENG/ARCH					THC
FIRE PROTECTION					KJS

DEPARTMENT OF THE NAVY
NAVAL FACILITIES ENGINEERING COMMAND
NAVAL FACILITIES ENGINEERING COMMAND
MARINE CORPS BASE – QUANTICO
QUANTICO, VA
P-635 ASP EXPANSION
ROOF FRAMING PLAN

SCALE: AS NOTED
EPROJECT NO.: 1312142
CONSTR. CONTR. NO.
NAVFAC DRAWING NO. 13072334
SHEET 118 OF 201

SB-102

DRAWFORM REVISION: 10 MARCH 2009

FILE NAME: C:\pwworking\gbna\raude\d0751227\BLDG635-1312142-SB102.dwg LAYOUT NAME: Layout1 PLOTTED: Wednesday, May 06, 2015 - 10:27am USER: raude

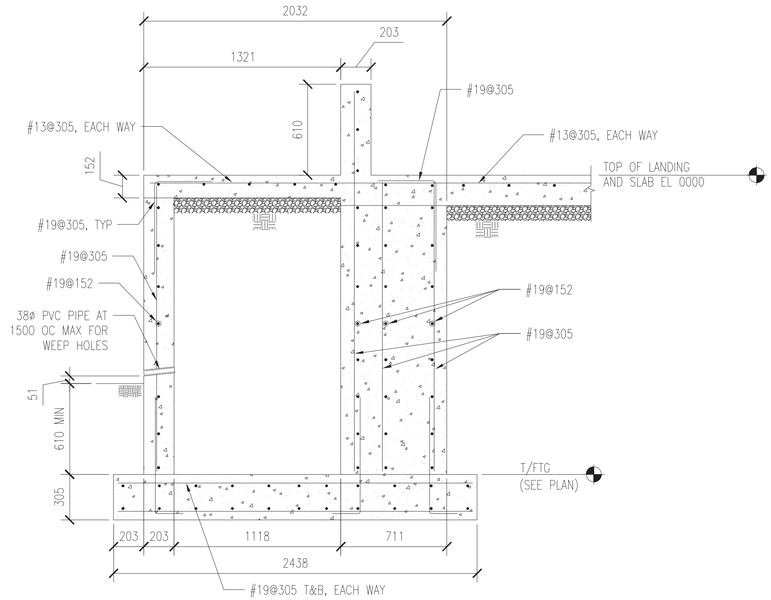

STAIR LANDING
SCALE: 1:20
SB-501 C1

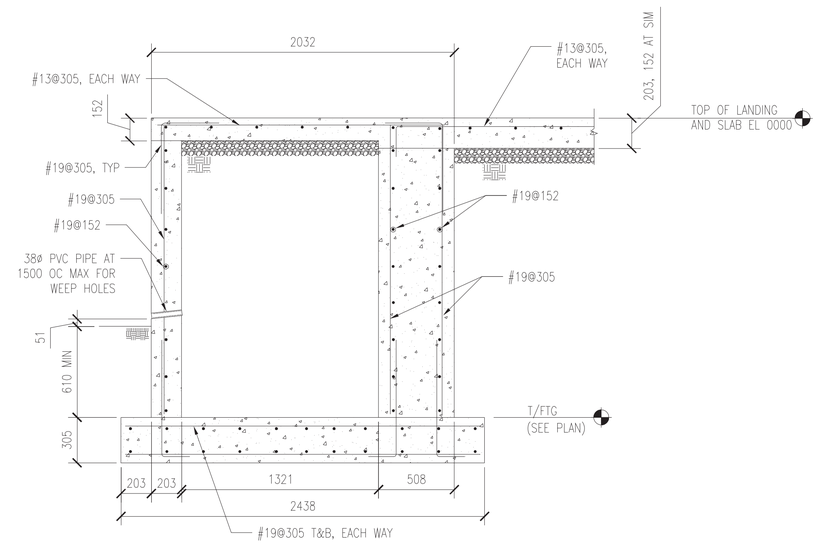

STAIR LANDING
SCALE: 1:20
SB-501 C5

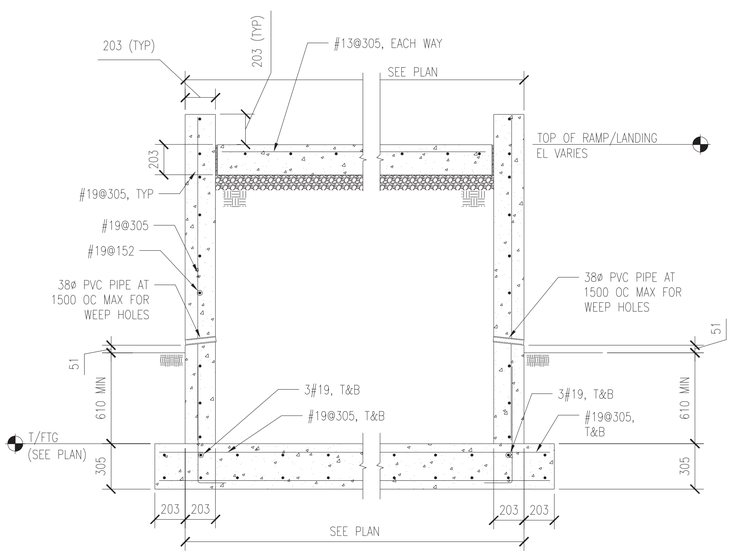

RAMP LANDING
SCALE: 1:20
SB-501 A1

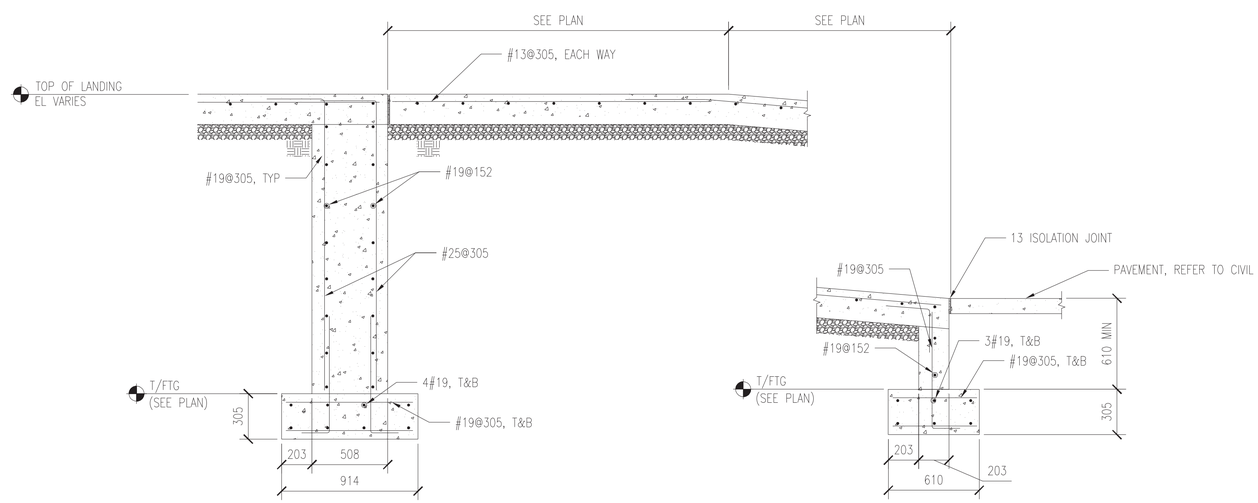

RAMP LANDING
SCALE: 1:20
SB-501 A4

GRAPHIC SCALES:
0 5 10 15 20m
SCALE: 1:20

SYM	DESCRIPTION	DATE	APPR

NAVFAC

COMMONWEALTH OF VIRGINIA
DANIEL EDWARD RAU
Lic. No. 040337
5/11/15
PROFESSIONAL ENGINEER
SEAL

JACOBS
1100 NORTH GLEBE ROAD SUITE 500
ARLINGTON, VIRGINIA 22201
TEL (571) 218-1000 FAX (571) 218-1600
A/E INFO

APPROVED
FOR COMMANDER NAVFAC 18 June 2015
ACTIVITY
SATISFACTORY TO DATE Signed by email 18 May 2015
DES DR DRW DR CHK KL
<<PM/DM>>
BRANCH MANAGER MS
CHIEF ENG/ARCH THC
FIRE PROTECTION KJS

DEPARTMENT OF THE NAVY
NAVAL FACILITIES ENGINEERING COMMAND
NAVAL FACILITIES ENGINEERING COMMAND
MARINE CORPS BASE – QUANTICO
QUANTICO, VA
P-635 ASP EXPANSION
SECTIONS AND DETAILS

SCALE: AS NOTED
EPROJECT NO.: 1312142
CONSTR. CONTR. NO.
NAVFAC DRAWING NO. 13072335
SHEET 119 OF 201
SB-501
DRAWFORM REVISION: 10 MARCH 2009

FILE NAME: C:\pwworking\gbna\raude\d0751227\BLDG635-1312142-SB501.dwg LAYOUT NAME: Layout1 PLOTTED: Wednesday, May 06, 2015 - 10:27am USER: raude

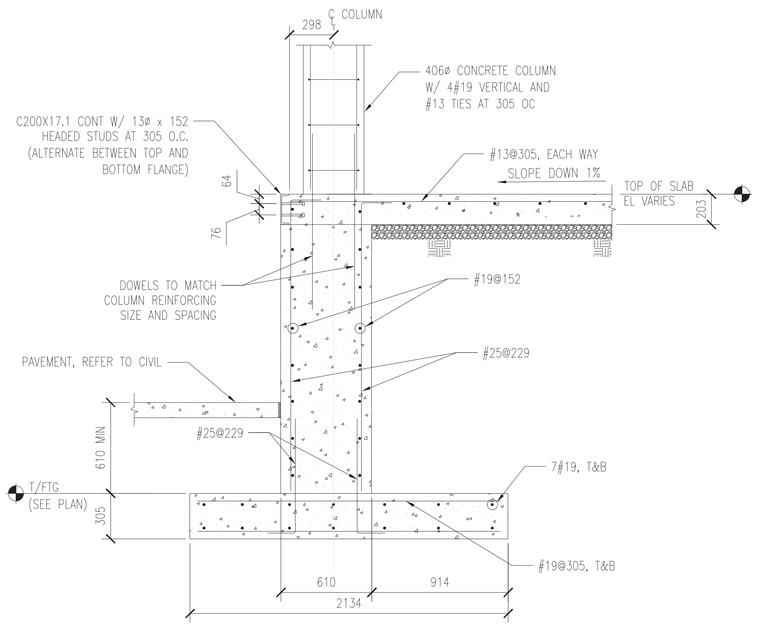

FOUNDATION AT COLUMNS (C1)

SCALE: 1:20 SB-502

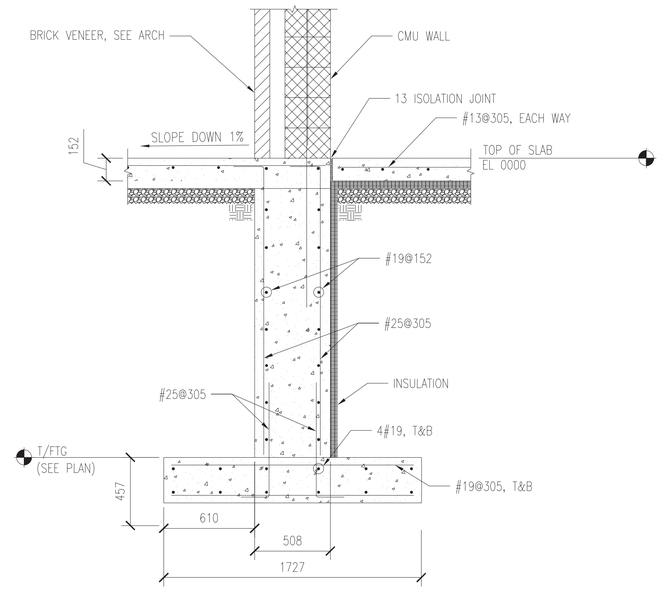

FOUNDATION BETWEEN SLABS (C3)

SCALE: 1:20 SB-502

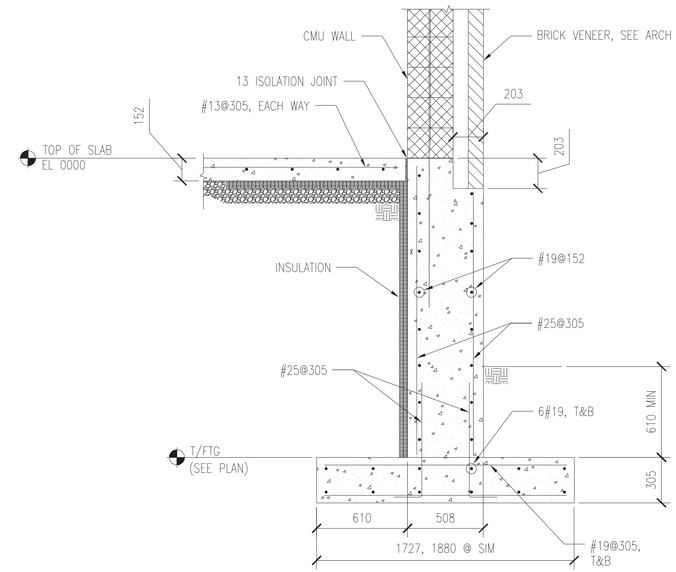

FOUNDATION AT EXTERIOR WALL (C4)

SCALE: 1:20 SB-502

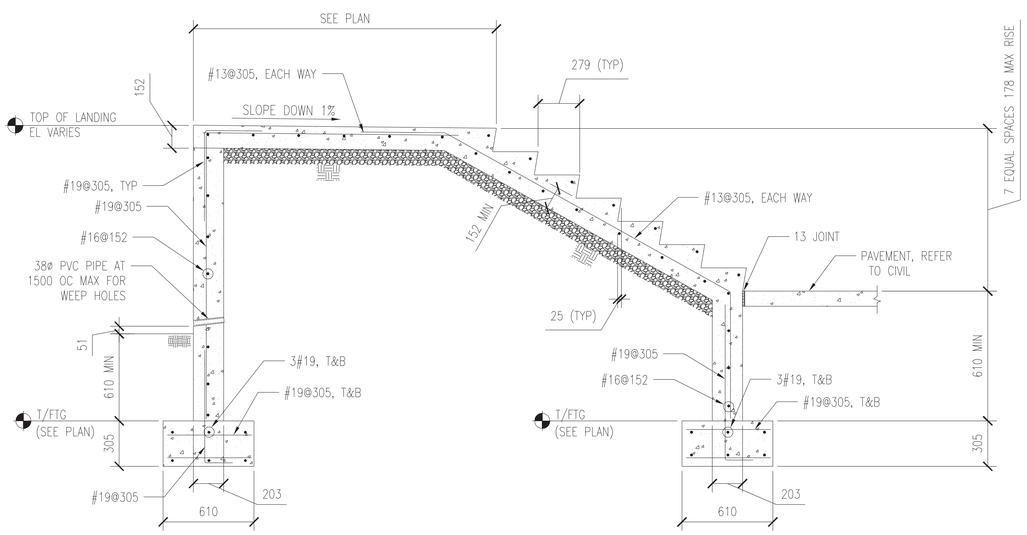

TYP STAIR DETAIL (A1)

SCALE: 1:20 SB-502

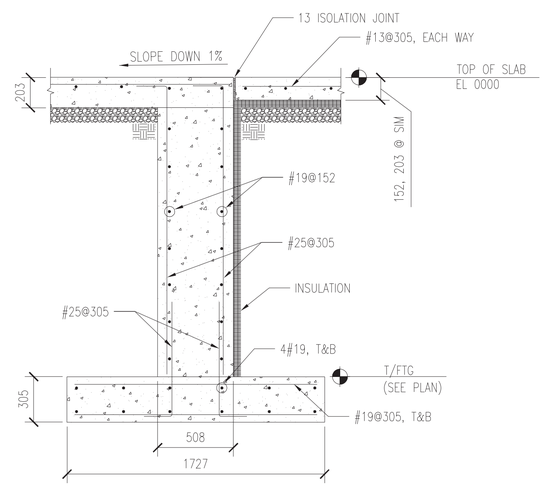

FOUNDATION BETWEEN SLABS (A3)

SCALE: 1:20 SB-502

GRAPHIC SCALES:

0 5 10 15 20m

SCALE: 1:20

SYM	DESCRIPTION	DATE	APPR

NAVFAC

COMMONWEALTH OF VIRGINIA
DANIEL EDWARD RAU
Lic. No. 040337
5/11/15
PROFESSIONAL ENGINEER

SEAL

JACOBS
1100 NORTH GLEBE ROAD SUITE 500
ARLINGTON, VIRGINIA 22201
TEL (571) 218-1000 FAX (571) 218-1600
A/E INFO

APPROVED

FOR COMMANDER NAVFAC 18 June 2015

ACTIVITY

SATISFACTORY TO DATE Signed by email 18 May 2015

DES	DR	DRW	DR	CHK	KL
<<PM/DM>>					
BRANCH MANAGER					MS
CHIEF ENG/ARCH					THC
FIRE PROTECTION					KJS

DEPARTMENT OF THE NAVY
NAVAL FACILITIES ENGINEERING COMMAND
NAVAL FACILITIES ENGINEERING COMMAND
MARINE CORPS BASE – QUANTICO
QUANTICO, VA

P-635 ASP EXPANSION

SECTIONS AND DETAILS

SCALE: AS NOTED
EPROJECT NO.: 1312142
CONSTR. CONTR. NO.
NAVFAC DRAWING NO. 13072336
SHEET 120 OF 201

SB-502

DRAWFORM REVISION: 10 MARCH 2009

FILE NAME: C:\pwworking\gbno\raude\d0751227\BLDG635-1312142-SB502.dwg LAYOUT NAME: Layout1 PLOTTED: Wednesday, May 06, 2015 - 10:28am USER: raude

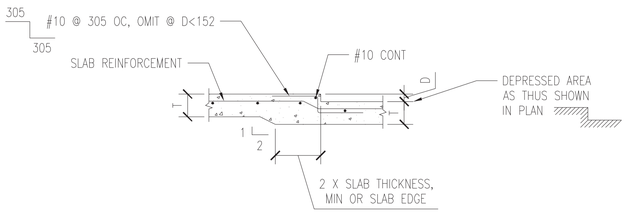

T – SLAB THICKNESS, SEE PLAN
D – DEPRESSION

SLAB DEPRESSION (C1)
SCALE: 1:20 SB-503

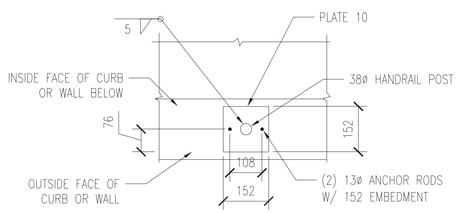

TYPICAL HANDRAIL SUPPORT (B1)
SCALE: 1:20 SB-503

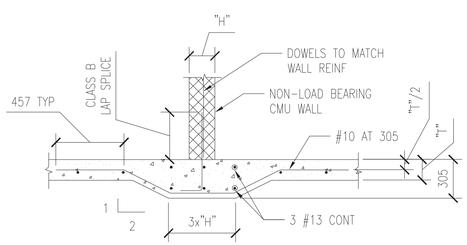

NOTE: SLAB REINF NOT SHOWN

THICKENED SLAB (A1)
SCALE: 1:20 SB-503

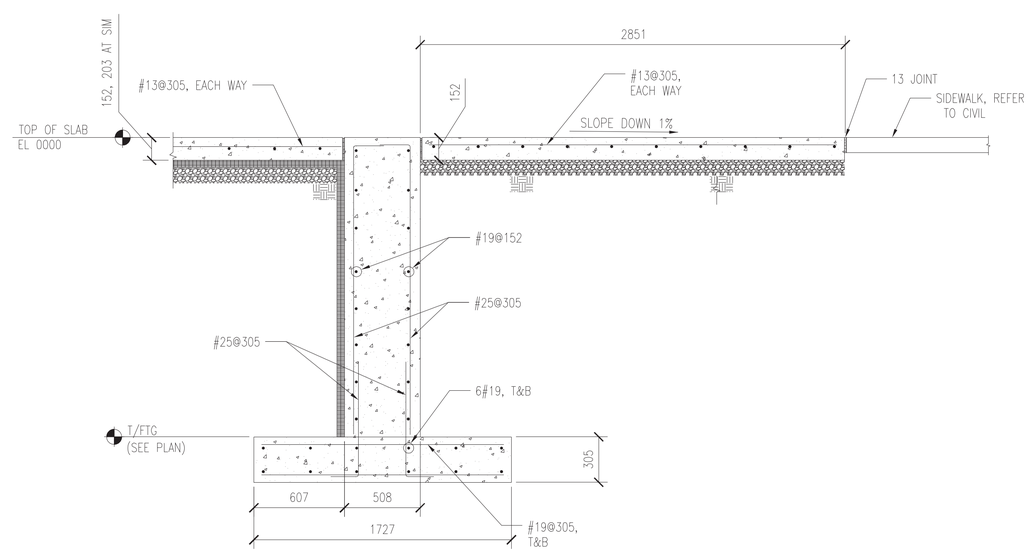

EXTERIOR STAIR AND LANDING (A3)
SCALE: 1:20 SB-503

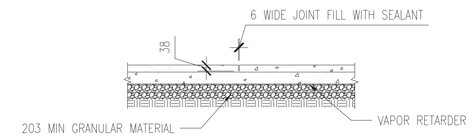

NOTE: ALTERNATE REBARS SHALL BE DISCONTINUOUS AT THE CONTROL JOINT

CONTROL JOINT (B5)
SCALE: 1:20 SB-503

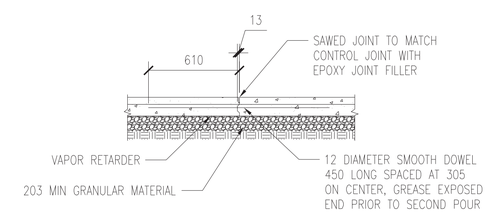

CONSTRUCTION JOINT (A5)
SCALE: 1:20 SB-503

GRAPHIC SCALES:

0 5 10 15 20m

SCALE: 1:20

SYM	DESCRIPTION	DATE	APPR

NAVFAC

COMMONWEALTH OF VIRGINIA
DANIEL EDWARD RAU
Lic. No. 040337
5/11/15
PROFESSIONAL ENGINEER

SEAL

JACOBS
1100 NORTH GLEBE ROAD SUITE 500
ARLINGTON, VIRGINIA 22201
TEL (571) 218-1000 FAX (571) 218-1600
A/E INFO

APPROVED
FOR COMMANDER NAVFAC 18 June 2015

ACTIVITY
SATISFACTORY TO DATE Signed by email 18 May 2015

DES	DR	DRW	DR	CHK	KL
<<PM/DM>>					
BRANCH MANAGER					MS
CHIEF ENG/ARCH					THC
FIRE PROTECTION					KJS

DEPARTMENT OF THE NAVY
NAVAL FACILITIES ENGINEERING COMMAND
NAVAL FACILITIES ENGINEERING COMMAND
MARINE CORPS BASE – QUANTICO
QUANTICO, VA
P-635 ASP EXPANSION
SECTIONS AND DETAILS

SCALE: AS NOTED
EPROJECT NO.: 1312142
CONSTR. CONTR. NO.
NAVFAC DRAWING NO. 13072337
SHEET 121 OF 201
SB-503

DRAWFORM REVISION: 10 MARCH 2009

FILE NAME: C:\pwworking\gbna\raude\d0751227\BLD635-1312142-SB503.dwg LAYOUT NAME: Layout1 PLOTTED: Wednesday, May 06, 2015 – 10:28am USER: raude

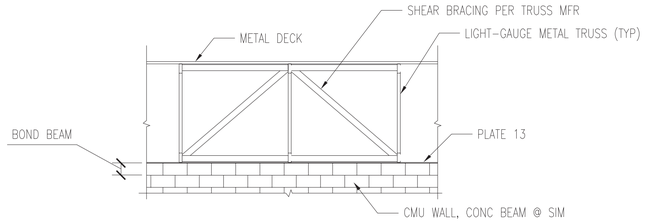

TRUSS SHEAR BRACING (C1)

SCALE: 1:50 SB-504

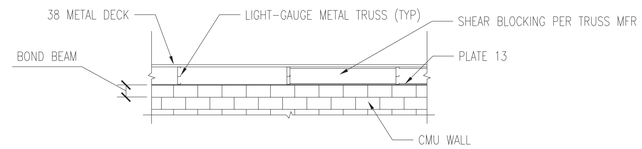

TRUSS SHEAR BLOCKING (C3)

SCALE: 1:50 SB-504

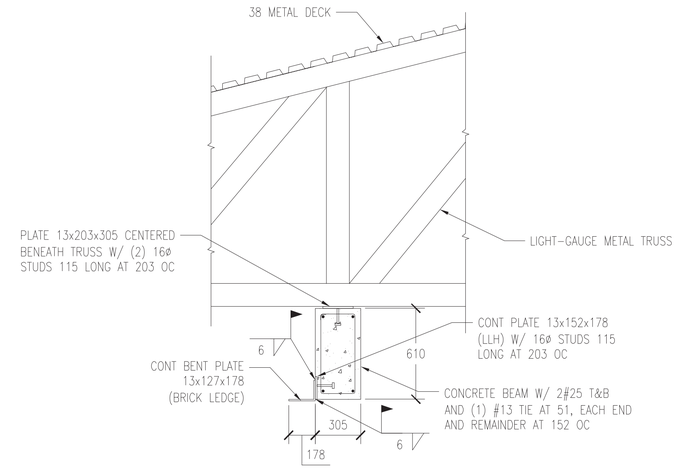

BEAM AT OVERHEAD DOOR (C4)

SCALE: 1:50 SB-504

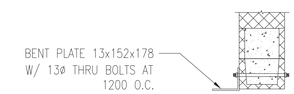

TYPICAL BRICK LEDGE AT BOND BEAM (B4)

SCALE: 1:50 SB-504

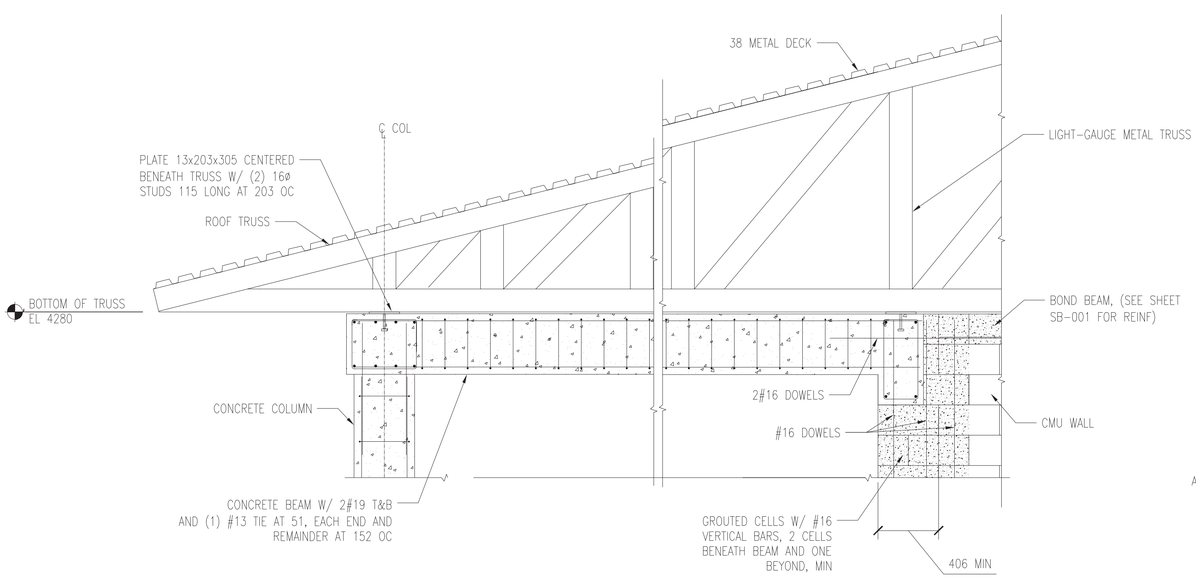

BEAM AT ROOF (A1)

SCALE: 1:50 SB-504

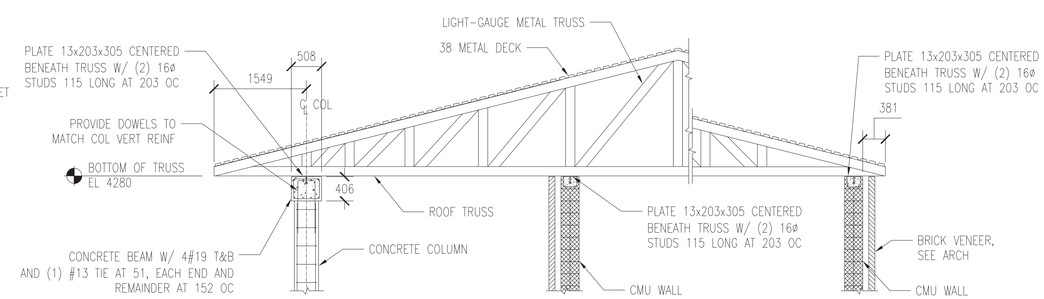

ROOF TRUSS SECTION (A4)

SCALE: 1:50 SB-504

GRAPHIC SCALES:

0 1 2 3 4 5m

SCALE: 1:50

SYM	DESCRIPTION	DATE	APPR

NAVFAC

COMMONWEALTH OF VIRGINIA
DANIEL EDWARD RAU
Lic. No. 040337
5/11/15
PROFESSIONAL ENGINEER

SEAL

JACOBS
1100 NORTH GLEBE ROAD SUITE 500
ARLINGTON, VIRGINIA 22201
TEL (571) 218-1000 FAX (571) 218-1600
A/E INFO

APPROVED
FOR COMMANDER NAVFAC 18 June 2015

ACTIVITY
SATISFACTORY TO DATE Signed by email 18 May 2015

DES	DR	DRW	DR	CHK	KL
<<PM/DM>>					
BRANCH MANAGER					MS
CHIEF ENG/ARCH					THC
FIRE PROTECTION					KJS

DEPARTMENT OF THE NAVY
NAVAL FACILITIES ENGINEERING COMMAND
NAVAL FACILITIES ENGINEERING COMMAND
MARINE CORPS BASE – QUANTICO
QUANTICO, VA

P-635 ASP EXPANSION

SECTIONS AND DETAILS

SCALE: AS NOTED
EPROJECT NO.: 1312142
CONSTR. CONTR. NO.
NAVFAC DRAWING NO. 13072338
SHEET 122 OF 201

SB-504

DRAWFORM REVISION: 10 MARCH 2009

FILE NAME: C:\pwworking\gbra\raude\d0751227\BLDG635-1312142-SB504.dwg LAYOUT NAME: Layout1 PLOTTED: Wednesday, May 06, 2015 - 10:28am USER: raude

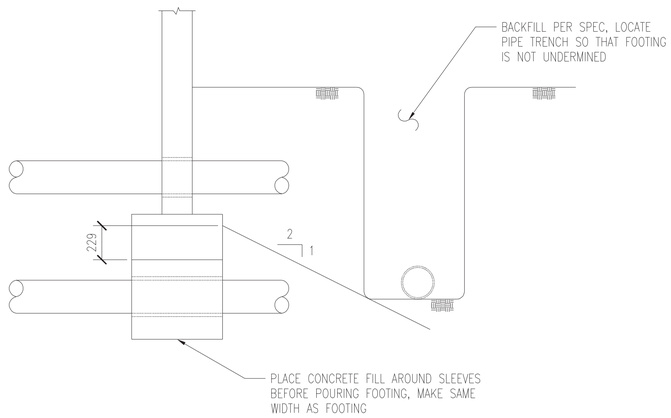

PIPE AND TRENCH AT FOOTING (C1)

SCALE: 1:20 SB-505

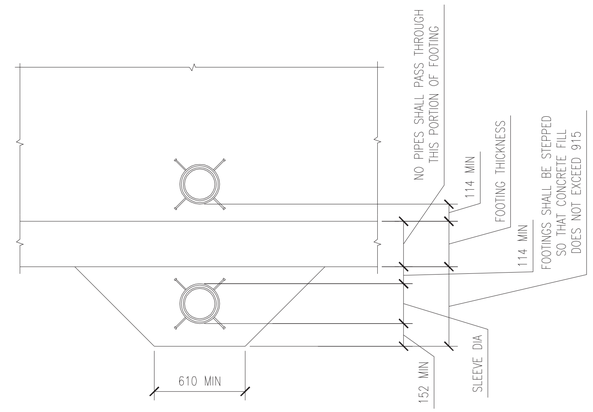

PIPE THRU FOUNDATION (C3)

SCALE: 1:20 SB-505

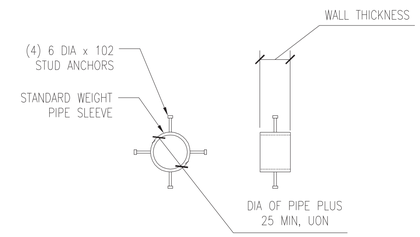

PIPE SLEEVE (C5)

SCALE: 1:20 SB-505

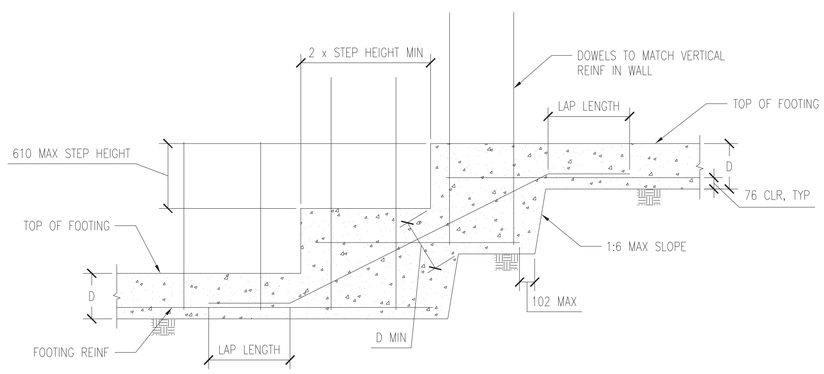

TYPICAL STEPPED FOOTING (A1)

SCALE: 1:20 SB-505

GRAPHIC SCALES:

0 5 10 15 20m

SCALE: 1:20

SYM	DESCRIPTION	DATE	APPR

NAVFAC

COMMONWEALTH OF VIRGINIA
DANIEL EDWARD RAU
Lic. No. 040337
5/11/15
PROFESSIONAL ENGINEER

SEAL

JACOBS
1100 NORTH GLEBE ROAD SUITE 500
ARLINGTON, VIRGINIA 22201
TEL (571) 218-1000 FAX (571) 218-1600
A/E INFO

APPROVED

FOR COMMANDER NAVFAC 18 June 2015

ACTIVITY

SATISFACTORY TO DATE Signed by email 18 May 2015

DES	DR	DRW	DR	CHK	KL
<<PM/DM>>					
BRANCH MANAGER					MS
CHIEF ENG/ARCH					THC
FIRE PROTECTION					KJS

DEPARTMENT OF THE NAVY
NAVAL FACILITIES ENGINEERING COMMAND
NAVAL FACILITIES ENGINEERING COMMAND
MARINE CORPS BASE – QUANTICO
QUANTICO, VA

P-635 ASP EXPANSION

SECTIONS AND DETAILS

SCALE: AS NOTED
EPROJECT NO.: 1312142
CONSTR. CONTR. NO.
NAVFAC DRAWING NO. 13072339
SHEET 123 OF 201

SB-505

DRAWFORM REVISION: 10 MARCH 2009

FILE NAME: C:\pwworking\gbna\raude\d0751227\BLDG635-1312142-SB505.dwg LAYOUT NAME: Layout1 PLOTTED: Wednesday, May 06, 2015 - 10:28am USER: raude