## MECHANICAL ABBREVIATIONS

| | |
|---|---|
| AAT | AMBIENT AIR TEMPERATURE |
| AAV | AUTOMATIC AIR VENT |
| ABAND | ABANDONED |
| A/C | AIR CONDITIONING |
| ACCEPT. | ACCEPTANCE |
| ACU | AIR CONDITIONING UNIT |
| A/D | ACCESS DOOR |
| ADJ | ADJUSTABLE |
| A/E | ARCHITECT / ENGINEER |
| AFF | ABOVE FINISHED FLOOR |
| AHU | AIR HANDLING UNIT |
| A/L | ACOUSTICALLY LINED |
| APPROX | APPROXIMATE |
| ARCH | ARCHITECTURAL / ARCHITECT |
| AS | AIR SEPARATOR |
| ATM | ATMOSPHERE |
| BAS | BUILDING AUTOMATION SYSTEM |
| B/D | BACKDRAFT DAMPER |
| BF | BLIND FLANGE |
| BHP | BRAKE HORSEPOWER |
| BLDG. | BUILDING |
| BTU | BRITISH THERMAL UNIT |
| BTUH | BRITISH THERMAL UNITS PER HOUR |
| CA | COMPRESSED AIR |
| CAP | PIPE/DUCT CAP |
| CAP. | CAPACITY |
| $CO_2$ | CARBON DIOXIDE |
| CC | COOLING COIL |
| CD | CONDENSATE DRAIN |
| CFM | CUBIC FEET PER MINUTE |
| CH | CHILLER |
| CHBT | CHILLED WATER BUFFER TANK |
| CHW | CHILLED WATER |
| CHW-C | CHILLED WATER – CAMPUS |
| CHWP | CHILLED WATER PUMP |
| CLG | CEILING |
| CMU | CONCRETE MASONRY UNIT |
| CO | CLEANOUT |
| COEFF | COEFFICIENT |
| COMM | COMMUNICATION |
| CONN | CONNECTION |
| CONT. | CONTINUATION |
| CR | CONDENSER WATER RETURN |
| CRAC | COMPUTER ROOM AIR CONDITIONING UNIT |
| CS | CONDENSER WATER SUPPLY |
| CV | CONTROL VALVE |
| CW | CITY WATER |
| CWR | CHILLED WATER RETURN |
| CWR-C | CHILLED WATER RETURN – CAMPUS |
| CWS | CHILLED WATER SUPPLY |
| CWS-C | CHILLED WATER SUPPLY – CAMPUS |
| CWS&R | CHILLED WATER SUPPLY & RETURN |
| DB | DRY BULB |
| DCW | DOMESTIC COLD WATER |
| DEG | DEGREES |
| DEMO | DEMOLITION |
| DET | DETAIL |
| DIA | DIAMETER |
| DIFF | DIFFUSER |
| DN | DOWN |
| DR | DRAIN |
| DWG | DRAWING |
| DX | DIRECT EXPANSION |
| EA | EXHAUST AIR |
| EA. | EACH |
| EAT | ENTERING AIR TEMPERATURE |
| EF | EXHAUST FAN |
| EFF | EFFICIENCY |
| E.G. | FOR EXAMPLE |
| EL | ELEVATION |
| ELEC | ELECTRICAL |
| ESP | EXTERNAL STATIC PRESSURE |
| ET | EXPANSION TANK |
| EWT | ENTERING WATER TEMPERATURE |
| EXH | EXHAUST |
| EXIST. | EXISTING |
| EXP | EXPANSION |
| F | FIRE PROTECTION WATER SUPPLY |
| FCU | FAN COIL UNIT |
| F/D | FIRE DAMPER |
| FDC | FIRE DEPARTMENT CONNECTION |
| FDR | FLOOR DRAIN |
| FF | FINISHED FLOOR |
| FLEX | FLEXIBLE |
| FPM | FEET PER MINUTE |
| FPS | FEET PER SECOND |
| FPTU | FAN POWERED TERMINAL UNIT |
| FT | FEET |
| FTR | FINNED TUBE RADIATION |
| FT WG | FEET (WATER GAUGE) |
| GPH | GALLONS PER HOUR |
| GPM | GALLONS PER MINUTE |
| GR | GRILLE |
| HC | HEATING COIL |
| HDP | HIGH DENSITY PUMPING UNIT |
| HED | HOSE-END DRAIN |
| HP | HORSEPOWER |
| HPR | HIGH PRESSURE CONDENSATE RETURN |
| HPS | HIGH PRESSURE STEAM |
| HR | HOUR |
| HGT | HEIGHT |
| HTR | HEATER |
| HW | HEATING WATER |
| HWP | HEATING WATER PUMP |
| HWR | HEATING WATER RETURN |
| HWS | HEATING WATER SUPPLY |
| HWS&R | HEATING WATER SUPPLY & RETURN |
| HZ | HERTZ |
| IN. | INCHES |
| IND | INDEPENDENT |
| IN. WG | INCHES (WATER GAUGE) |
| IPLV | INTEGRATED PART LOAD VALUE |
| IPS | IRON PIPE SIZE |
| KW | KILOWATTS |
| L | LONG / LENGTH |
| LAT | LEAVING AIR TEMPERATURE |
| LD | LINER DIFFUSER |
| LF | LINEAR FEET |
| LPR | LOW PRESSURE CONDENSATE RETURN |
| LPS | LOW PRESSURE CONDENSATE SUPPLY |
| LWT | LEAVING WATER TEMPERATURE |
| MA | MIXED AIR |
| MAV | MANUAL AIR VENT |
| MAX | MAXIMUM |
| MBH | THOUSANDS OF BTUs PER HOUR |
| MECH | MECHANICAL |
| MEZZ | MEZZANINE |
| MFG | MANUFACTURER |
| MIN | MINIMUM |
| M/D | MOTOR OPERATED DAMPER |
| MPR | MEDIUM PRESSURE CONDENSATE RETURN |
| MPS | MEDIUM PRESSURE CONDENSATE SUPPLY |
| N/A | NOT APPLICABLE |
| NC | NOISE CRITERIA |
| N.C. | NORMALLY CLOSED |
| NIC | NOT IN CONTRACT |
| N.O. | NORMALLY OPEN |
| NPLV | NON-STANDARD PART LOAD VALUE |
| NPSHR | NET POSITIVE SUCTION HEAD REQUIRED |
| NPW | NON-POTABLE WATER |
| NRL | NAVAL RESEARCH LABORATORY |
| NTS | NOT TO SCALE |
| OA | OUTSIDE AIR |
| O.C. | ON CENTER |
| OD | OUTSIDE DIAMETER |
| OED | OPEN END DUCT |
| OEP | OPEN END PIPE |
| P | PUMP |
| P&ID | PROCESS & INSTRUMENTATION DIAGRAM |
| PC | PUMPED CONDENSATE RETURN |
| PCHW | PRIMARY CHILLED WATER |
| PCWR | PRIMARY CHILLED WATER RETURN |
| PCWS | PRIMARY CHILLED WATER SUPPLY |
| PCWS&R | PRIMARY CHILLED WATER SUPPLY & RETURN |
| PD | PRESSURE DROP |
| PIV | POST INDICATOR VALVE |
| PRESS | PRESSURE |
| PRV | PRESSURE REGULATING VALVE |
| PSI | POUNDS PER SQUARE INCH |
| P/T | PRESSURE/TEMPERATURE PORT |
| PTRV | PRESSURE/TEMPERATURE RELIEF VALVE |
| QTY | QUANTITY |
| R-12 | REFRIGERANT TYPE (12, 22, ETC.) |
| RA | RETURN AIR |
| RAD | RADIUS |
| RAF | RAISED ACCESS FLOOR |
| REFRIG | REFRIGERANT |
| REG | REGISTER |
| RET | RETURN |
| REV | REVOLUTIONS |
| RG | REFRIGERANT GAS |
| RH | RELATIVE HUMIDITY |
| RL | REFRIGERANT LIQUID |
| RM | ROOM |
| RPM | REVOLUTIONS PER MINUTE |
| RPP | REDUCED PRESSURE PRINCIPLE |
| RS | REFRIGERANT SUCTION |
| RV | RELIEF VALVE |
| SA | SUPPLY AIR |
| SAD | SOUND ATTENUATING DEVICE |
| SC | STEAM COIL |
| SCH | SCHEDULE |
| SCHW | SECONDARY CHILLED WATER |
| SCWR | SECONDARY CHILLED WATER RETURN |
| SCWS | SECONDARY CHILLED WATER SUPPLY |
| SE | SMOKE EXHAUST |
| SENS | SENSIBLE |
| SF | SHOT FEEDER |
| SH | SENSIBLE HEAT |
| SQ | SQUARE |
| SUP | SUPPLY |
| TDH | TOTAL DYNAMIC HEAD |
| TEMP | TEMPERATURE |
| THK | THICK |
| TONS | TONS OF REFRIGERATION |
| TSP | TOTAL STATIC PRESSURE |
| TU | TERMINAL UNIT |
| TYP | TYPICAL |
| UH | UNIT HEATER |
| UL | UNDERWRITERS LABORATORIES |
| V | VOLTS |
| VA | VOLT-AMPERE |
| VAC | VACUUM AIR |
| VAV | VARIABLE AIR VOLUME |
| V/D | VOLUME DAMPER (MANUAL) |
| VERT | VERTICAL |
| VT | VENT |
| VTR | VENT THRU ROOF |
| W | WIDE / WIDTH, WATTS |
| WB | WET BULB |
| WTR | WATER |
| W/ | WITH |
| dBA | DECIBELS (A-WEIGHTED) |
| @ | AT |
| °C | DEGREES CELSIUS |
| °F | DEGREES FAHRENHEIT |
| ϕ | ELECTRICAL PHASE |
| % | PERCENT |
| ΔP | PRESSURE DROP |

## MISCELLANEOUS

| | |
|---|---|
| ——— | NEW WORK (HEAVY LINE – SOLID) |
| – – – – | DEMOLITION WORK (HEAVY LINE – DASHED) |
| ——— | EXISTING WORK (LIGHT LINE) |
| ———ʃ | PIPE OR DUCT CONTINUATION |
| | POINT OF DEMOLITION |
| | POINT OF CONNECTION |
| | FLOOR DRAIN |

## DUCTWORK ELEMENTS

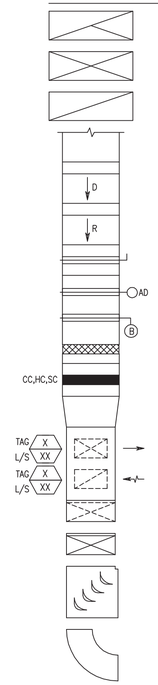


SECTION THRU OUTSIDE AIR DUCT

SECTION THRU SUPPLY AIR DUCT

SECTION THRU RETURN OR EXHAUST AIR DUCT

DUCTWORK

INCLINED DROP IN DIRECTION OF ARROW

INCLINED RISE IN DIRECTION OF ARROW

DAMPER, MANUAL VOLUME

DAMPER, AUTOMATIC CONTROL

DAMPER, BAROMETRIC

FLEXIBLE CONNECTOR

DUCT-MOUNTED COIL

TRANSITION, RECTANGULAR

SUPPLY AIR DEVICE

RETURN AIR DEVICE

ELBOW TURNED DOWN

ELBOW TURNED UP

ELBOW, RECTANGULAR (TURNING VANES)

ELBOW, RECTANGULAR (RADIUS TYPE)

## INSTRUMENTATION & CONTROLS

| | |
|---|---|
| CO2 | CARBON DIOXIDE SENSOR |
| CD | CONTROL DAMPER |
| CI | CURRENT INPUT |
| CS | CURRENT SWITCH |
| DPI | DIFFERENTIAL PRESSURE INDICATOR |
| EAS | EMERGENCY AIR DISTRIBUTION SHUT-OFF SWITCH |
| ED | ENABLE/DISABLE |
| ES | END SWITCH |
| H | HUMIDISTAT |
| H | HUMIDITY SENSOR |
| LCP | LOCAL CONTROL PANEL |
| OS | OCCUPANCY SENSOR |
| RV | REVERSING VALVE |
| SS | START/STOP |
| T | TEMPERATURE SENSOR |
| T | THERMOSTAT |
| WD | WATER DETECTOR |
| BI | BINARY INPUT TO DDCS |
| BO | BINARY OUTPUT TO DDCS |
| AI | ANALOG INPUT TO DDCS |
| AO | ANALOG OUTPUT TO DDCS |
| — — | DDC CONTROL SYSTEM WIRING |
| · · · | ELECTRONIC INTERLOCK WIRING |

## GENERAL MECHANICAL NOTES

1. PIPING SHALL BE FIELD ROUTED IN ACCORDANCE WITH APPROPRIATE ENGINEERING PRACTICES, INDUSTRY STANDARDS, AND GOVERNING CODES/REGULATIONS. ROUTE OF PIPE, INCLUDING CLEARANCE, IS THE RESPONSIBILITY OF THE CONTRACTOR. UNIONS, BUSHINGS, AND REDUCING INSERTS, NOT SHOWN ON THE DRAWINGS, BUT REQUIRED FOR INSTALLATION SHALL BE PROVIDED.
2. PRIOR TO START OF CONSTRUCTION, CONTRACTOR SHALL FIELD VERIFY LOCATION AND SIZES OF ELEMENTS RELATED TO THE WORK. ROUTING OF PIPING AND DUCTWORK SHOWN ON DRAWINGS IS DIAGRAMMATIC. CONTRACTOR SHALL ASCERTAIN THAT INTERFERENCES WILL NOT BE ENCOUNTERED, PREVENTING THE DISASSEMBLY OF PARTIALLY OR COMPLETELY ERECTED SYSTEMS FOR RE-ROUTING TO CLEAR OBSTRUCTIONS WHICH MAY EXIST.
3. FURNISH AND INSTALL THE COMPLETE AND FUNCTIONAL SYSTEMS REQUIRED, INCLUDING EQUIPMENT, CONTROLS, DUCTWORK, PIPING, WIRING, VALVES, AND ALL OTHER APPURTENANCES AND HARDWARE FOR A COMPLETE SYSTEM.

INFORMATION ON THIS SHEET IS ONLY APPLICABLE TO MB-SHEETS.

NOTE:
NOT ALL ABBREVIATIONS & SYMBOLS MAY BE USED

| SYM | DESCRIPTION | DATE | APPR |
|---|---|---|---|

NAVFAC

SEAL

JACOBS
1100 NORTH GLEBE ROAD SUITE 500
ARLINGTON, VIRGINIA 22201
TEL (571) 218-1000 FAX (571) 218-1600
A/E INFO

APPROVED
FOR COMMANDER NAVFAC
ACTIVITY 18 June 2015
SATISFACTORY TO DATE
DES DT DRW BT CB
<<PM/DM>>
BRANCH MANAGER MS
CHIEF ENG/ARCH THC
FIRE PROTECTION KTD

DEPARTMENT OF THE NAVY
NAVAL FACILITIES ENGINEERING COMMAND
MARINE CORPS BASE – QUANTICO
QUANTICO, VA
P-635 ASP EXPANSION
MECHANICAL NOTES, SYMBOLS AND ABBREVIATIONS

SCALE: NONE
EPROJECT NO.: 1312142
CONSTR. CONTR. NO.
NAVFAC DRAWING NO. 13072340
SHEET 124 OF 201
MB-001
DRAWFORM REVISION: 10 MARCH 2009

FILE NAME: C:\pwworking\pbno\\trovtedp\d0751239\BLDG635-1312142-M001.dwg LAYOUT NAME: M-001 PLOTTED: Tuesday, June 09, 2015 - 7:54am USER: trovtedp

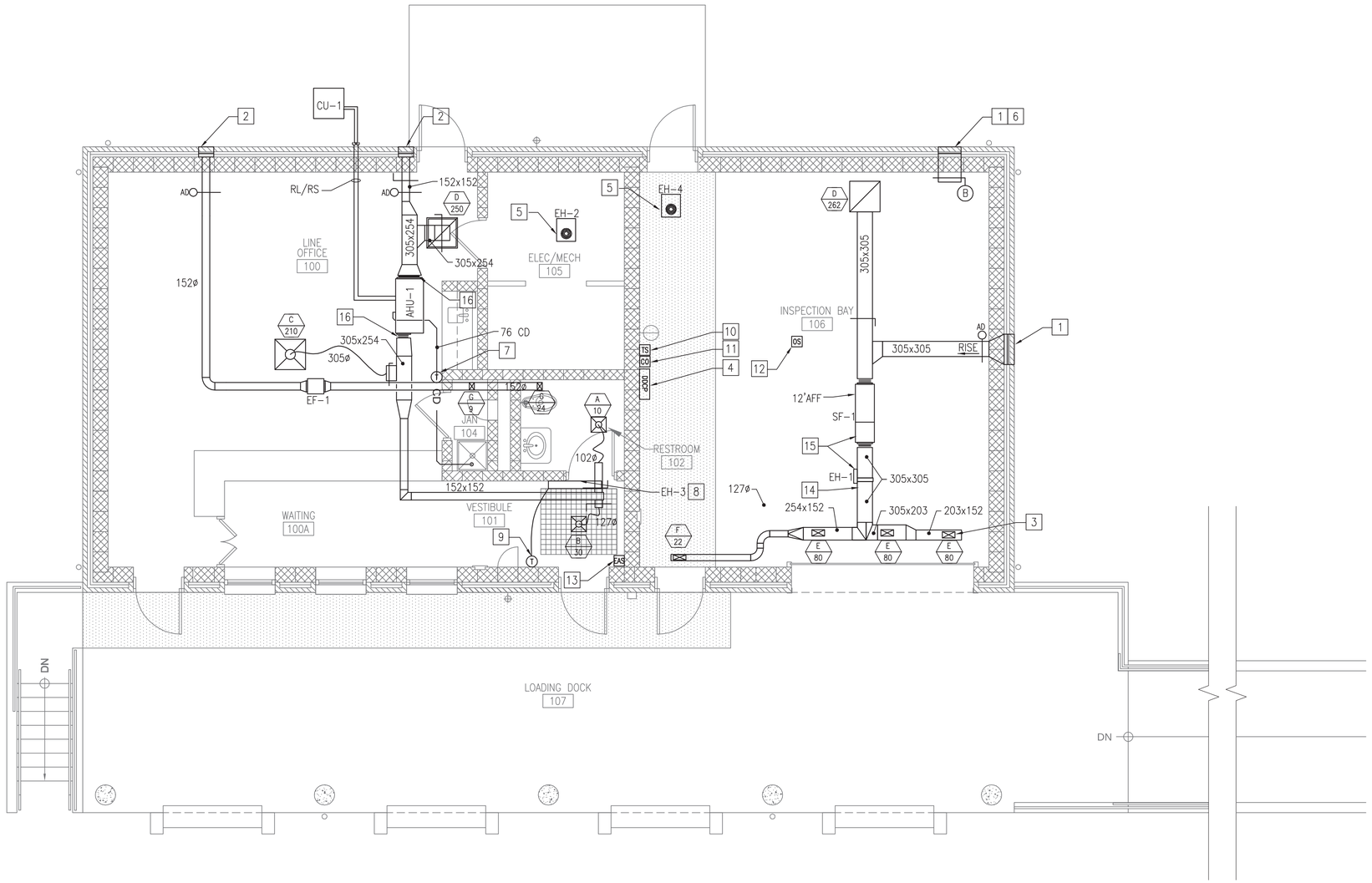


## MECHANICAL FLOOR PLAN

SCALE: 1:50

PLAN NORTH

0 50 100 200

SCALE: 1:50

## GENERAL NOTES

1. REFER TO DRAWING M-001 FOR GENERAL NOTES, ABBREVIATIONS, SYMBOLS, ETC.
2. DUCT DIMENSIONS ARE IN mm AND AIRFLOWS ARE IN L/S.

## KEY NOTES

1. 610Wx610H BLAST RESISTANT LOUVER WITH REMOVABLE BIRDSCREEN AND INSULATED PLENUM BOX.
2. 305Wx305H BLAST RESISTANT LOUVER WITH REMOVABLE BIRDSCREEN AND INSULATED PLENUM BOX.
3. INSTALL DUCTWORK AND GRILLES TO ENSURE THAT BOTTOM OF GRILLE IS 75-150mm ABOVE TOP OF GARAGE DOOR OPENING.
4. BUILDING NETWORK CONTROL PANEL.
5. HEATER IS CEILING SUSPENDED WITH VERTICAL DISCHARGE. MOUNT 3M ABOVE FINISHED FLOOR.
6. PRESSURE RELIEF LOUVER.
7. BACNET DDC THERMOSTAT SERVING AHU-1.
8. MOUNT COVE HEATER 2286 ABOVE FINISHED FLOOR.
9. PROVIDE LINE VOLTAGE THERMOSTAT SERVING COVE HEATER.
10. PROVIDE DDC ROOM TEMPERATURE SENSOR FOR MONITORING AND CONTROL SPACE TEMPERATURE.
11. PROVIDE CARBON MONOXIDE (CO) SENSOR FOR MONITORING AND CONTROL SPACE CO LEVEL.
12. PROVIDE CEILING MOUNTED OCCUPANCY SENSOR WITH 360-DEGREE COVERAGE FOR OCCUPANCY OVERRIDE.
13. PROVIDE EMERGENCY AIR DISTRIBUTION SHUT-OFF SWITCH WITH HINGED CLEAR COVER, WARNING SIGN AND TAG. EMERGENCY SWITCH SHALL SHUTDOWN ALL HVAC EQUIPMENT CONTROLLED BY DDCS IN BUILDING WHEN SWITCH IS ACTIVATED.
14. PROVIDE DUCT ACCESS TO INSPECT AND SERVICE ELECTRIC DUCT HEATER COILS.
15. 40" CLEAR SPACE REQUIRED ON THIS SIDE OF UNITS FOR SERVICE AND MAINTENANCE.
16. FLEXIBLE CONNECTOR BETWEEN DUCT AND AHU.

| SYM | DESCRIPTION | DATE | APPR |
|---|---|---|---|

NAVFAC

STATE OF MARYLAND
CARLO P. TRAVALINI
49348
PROFESSIONAL ENGINEER
SEAL

JACOBS
1100 NORTH GLEBE ROAD SUITE 500
ARLINGTON, VIRGINIA 22201
TEL (571) 218-1000 FAX (571) 218-1600
A/E INFO

APPROVED
FOR COMMANDER NAVFAC
ACTIVITY 18 June 2015

SATISFACTORY TO DATE
DES DT DRW BT CB
<<PM/DM>>
BRANCH MANAGER
CHIEF ENG/ARCH THC
FIRE PROTECTION KTD

DEPARTMENT OF THE NAVY
NAVAL FACILITIES ENGINEERING COMMAND
MARINE CORPS BASE – QUANTICO
QUANTICO, VA
P-635 ASP EXPANSION
MECHANICAL FLOOR PLAN

SCALE: 1:50
EPROJECT NO.: 1312142
CONSTR. CONTR. NO.
NAVFAC DRAWING NO. 13072341
SHEET 125 OF 201
MB-101
DRAWFORM REVISION: 10 MARCH 2009

FILE NAME: C:\pwworking\gbno\traviedp\d0751239\BLDG635-1312142-M101.dwg LAYOUT NAME: Layout1 PLOTTED: Tuesday, June 09, 2015 - 7:54am USER: traviedp

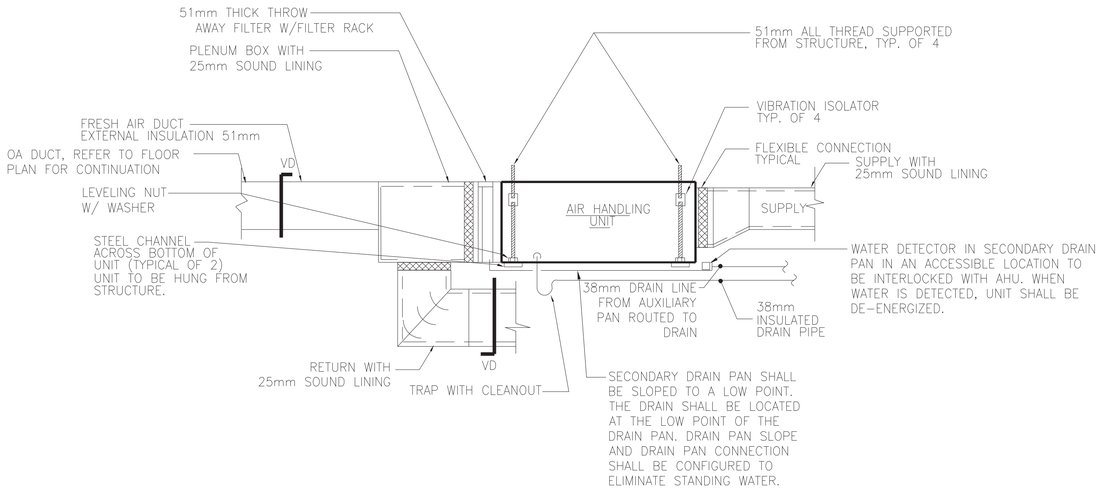


## AIR HANDLER DETAIL

SCALE: NTS M-501 C2

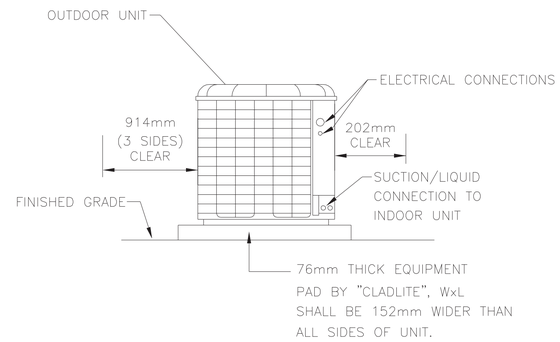


## HEAT PUMP UNIT DETAIL

SCALE: NTS M-501 C4

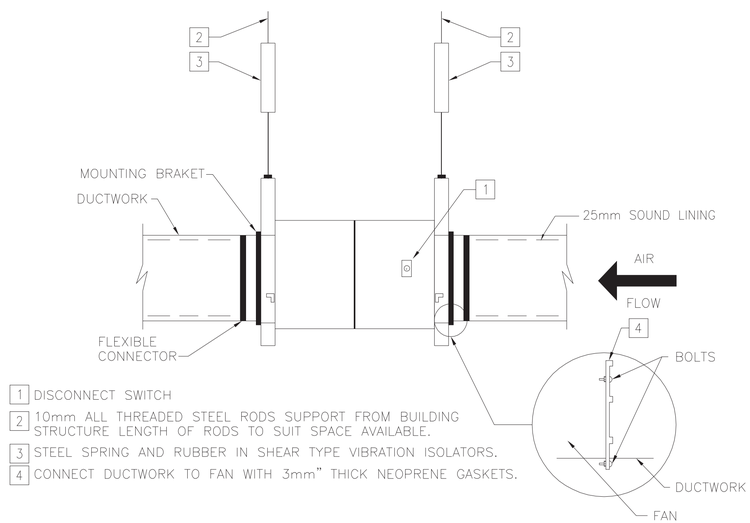


1 DISCONNECT SWITCH
2 10mm ALL THREADED STEEL RODS SUPPORT FROM BUILDING STRUCTURE LENGTH OF RODS TO SUIT SPACE AVAILABLE.
3 STEEL SPRING AND RUBBER IN SHEAR TYPE VIBRATION ISOLATORS.
4 CONNECT DUCTWORK TO FAN WITH 3mm" THICK NEOPRENE GASKETS.

## IN-LINE FAN DETAIL

SCALE: NTS M-501 A2

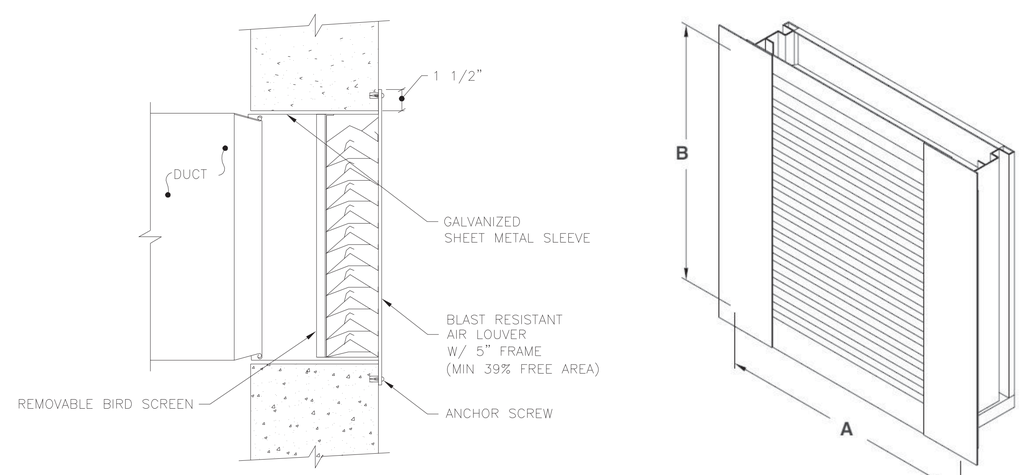


NOTE: FOLLOW MANUFACTURERS BLAST RATED LOUVER INSTALLATION INSTRUCTIONS

## BLAST RESISTANT LOUVER DETAIL

SCALE: NTS M-501 A4

| SYM | DESCRIPTION | DATE | APPR |
|---|---|---|---|

NAVFAC

STATE OF MARYLAND
DAVID P. TRAVIESO
43148
PROFESSIONAL ENGINEER
10/15

SEAL

JACOBS
1100 NORTH GLEBE ROAD SUITE 500
ARLINGTON, VIRGINIA 22201
TEL (571) 218-1000 FAX (571) 218-1600
A/E INFO

APPROVED
FOR COMMANDER NAVFAC
ACTIVITY 18 June 2015
SATISFACTORY TO DATE Stamped by email 18 June 2015
DES DT DRW DT CHK CB
<<PM/DM>>
BRANCH MANAGER
CHIEF ENG/ARCH THC
FIRE PROTECTION KTD

DEPARTMENT OF THE NAVY
NAVAL FACILITIES ENGINEERING COMMAND
NAVAL FACILITIES ENGINEERING COMMAND
MARINE CORPS BASE – QUANTICO
QUANTICO, VA
P-635 ASP EXPANSION
MECHANICAL DETAILS

SCALE: NTS
EPROJECT NO.: 1312142
CONSTR. CONTR. NO.
NAVFAC DRAWING NO. 13072342
SHEET 126 OF 201
MB-501

DRAWFORM REVISION: 10 MARCH 2009

FILE NAME: C:\pwworking\gbna\traviedp\d0751239\BLDG635-1312142-M501.dwg LAYOUT NAME: Layout1 PLOTTED: Tuesday, June 09, 2015 - 7:54am USER: traviedp

# HEAT PUMP SPLIT SYSTEM UNIT SCHEDULE

| DESIGNATION | SUPPLY AIR TOTAL (L/s) | OUTSIDE AIR (L/s) | ESP (Pa) | COOLING CAPACITY TOTAL (kW) | COOLING CAPACITY SENSIBLE (kW) | HEAT PUMP HEATING CAPACITY TOTAL (kW) | ELECTRICAL HEATING CAPACITY (kW) | SUPPLY FAN (W) | CONTROL TYPE | AIR HANDLING UNIT ELECTRICAL DATA MCA/ MOCP | AIR HANDLING UNIT ELECTRICAL DATA VOLTS/ PHASE | HEAT PUMP UNIT ELECTRICAL DATA MCA/ MOCP | HEAT PUMP UNIT ELECTRICAL DATA VOLTS/ PHASE | MINIMUM SEER/ HSPF | AHU MOUNTING FLOW | AHU MASS (KG) |
|---|---|---|---|---|---|---|---|---|---|---|---|---|---|---|---|---|
| AHU-1/CU-1 | 250 | 40 | 100 | 5 | 3.8 | 5 | 5 | 373 | DDC THERMOSTAT | 28.5/30 | 208/1 | 12/20 | 208/1 | 15/8.5 | SUSPENDED HORIZONTAL | 46 |

SCHEDULE NOTES:

1. COOLING DESIGN BASED ON 32°CDB/24°CWB AMBIENT OUTDOOR CONDITION, 7°C SUCTION TEMPERATURE, AND 24°C 50% RH SPACE CONDITION. HEATING DESIGN BASED ON -6°CDB.
2. CONTRACTOR TO FURNISH AND INSTALL INSULATED REFRIGERANT PIPING BETWEEN AHU AND CONDENSING UNIT. REFER TO PIPING MANUAL PUBLICATION OF MANUFACTURER. SIZE AND CHARGE REFRIGERANT PER MANUFACTURER'S RECOMMENDATIONS FOR SUCH APPLICATION.
3. ESP IS EXCLUSIVE OF FILTERS, WET COIL, CASING LOSSES, AND HEATING COIL.
4. PROVIDE LIQUID LINE SOLENOID VALVES WITH OUTDOOR UNITS.
5. HEAT PUMP CAPACITY LISTED IS FOR 8°C OUTDOOR CONDITION.
6. AIR HANDLING UNIT SHALL HAVE SINGLE POINT ELECTRICAL CONNECTION INCLUDING ELECTRIC HEATER.
7. MCA FOR AIR HANDLING UNIT INCLUDES FAN AND HEATER.
8. PROVIDE DRAIN PAN MOUNTED LEAK DETECTION DEVICE.
9. PROVIDE MERV 13 FILTERS WITH MAX 0.02 kPA STATIC PRESSURE DROP AT DESIGN AIRFLOW.
10. PROVIDE ELECTRONICALLY COMMUTATED MOTOR.
11. PROVIDE 24V CONTROL TRANSFORMER.
12. PROVIDE CRANKCASE HEATER.
13. PROVIDE INSULATED AHU CABINET.

# DIFFUSER AND REGISTER SCHEDULE

| DESIGNATION | L/S RANGE | THROW (METERS) | NECK SIZE (mm) | DESCRIPTION |
|---|---|---|---|---|
| A | 0-20 | - | 102ø | 305x305 STEEL SQUARE CONE ADJUSTABLE SUPPLY DIFFUSER WITH OPPOSED BLADE DAMPER |
| B | 21-36 | - | 127ø | 305x305 STEEL SQUARE CONE ADJUSTABLE SUPPLY DIFFUSER WITH OPPOSED BLADE DAMPER |
| C | 200-250 | - | 305ø | 610x610 STEEL SQUARE CONE ADJUSTABLE SUPPLY DIFFUSER WITH OPPOSED BLADE DAMPER |
| D | 0-476 | - | 559x559 | 610x610 PERFORATED RETURN |
| E | 25-96 | - | 254x102 | ALUMINUM LOUVERED FACE SUPPLY GRILLE WITH OPPOSED BLADE DAMPER |
| F | 0-24 | - | 152x102 | ALUMINUM LOUVERED FACE SUPPLY GRILLE WITH OPPOSED BLADE DAMPER |
| G | 0-30 | - | 152x102 | ALUMINUM LOUVERED RETURN GRILLE WITH OPPOSED BLADE DAMPER |

SCHEDULE NOTES:

1. MAXIMUM NC LEVEL OF ALL DIFFUSERS SHALL BE NC35 UNLESS OTHERWISE NOTED.
2. ALL CEILING DIFFUSERS SHALL BE PROVIDED WITH FRAME AND BORDER SUITABLE FOR THE CEILING TYPE AS SPECIFIED ON THE ARCHITECTURAL DOCUMENTS.
3. MAXIMUM PRESSURE DROP ACROSS DIFFUSER SHALL NOT EXCEED 20Pa, UNLESS OTHERWISE NOTED.

# ELECTRIC HEATER SCHEDULE

| DESIGNATION | AIRFLOW (L/s) | OUTPUT (KW) | VOLTS/ PHASE | MOUNTING TYPE | CONTROL TYPE | DIMENSIONS (WxH) IN INCHES |
|---|---|---|---|---|---|---|
| EH-1 | 262 | 8 | 208/3 | DUCT | DDC CONTROLLER | 254mm x 203mm |
| EH-2 | 188 | 3.3 | 208/3 | SUSPENDED | INTEGRAL THERMOSTAT | 381mm x 457mm |
| EH-3 | - | .45 | 120/1 | WALL | WALL THERMOSTAT | 1067mm x 150mm |
| EH-4 | 188 | 3.3 | 208/3 | SUSPENDED | INTEGRAL THERMOSTAT | 381mm x 457mm |

SCHEDULE NOTES:

1. PROVIDE HEATERS WITH DISCONNECT AND THERMAL OVERLOAD PROTECTION.
2. PROVIDE EH-2 AND EH-4 WITH VERTICAL DISCHARGE MOUNTING HARDWARE AND CIRCULAR DISCHARGE.
3. PROVIDE DIFFERENTIAL PRESSURE SENSOR TO ENABLE EH-1 ONLY WHEN SF-1 IS OPERATING.
4. PROVIDE EH-1 WITH SCR CONTROL.
5. PROVIDE EH-3 COVE HEATER WITH WALL MOUNT BRACKETS.

# FAN SCHEDULE

| DESIGNATION | AIRFLOW (L/s) | OUTSIDE AIRFLOW (L/s) | E.S.P. (Pa) | VOLTS/ PHASE | MOTOR RPM | POWER (W) | DRIVE TYPE | CONTROL TYPE | FAN TYPE |
|---|---|---|---|---|---|---|---|---|---|
| SF-1 | 262 | 71 | 100 | 208/1 | 1567 | 125 | DIRECT | DDC CONTROLLER | INLINE |
| EF-1 | 33 | - | 75 | 120/1 | 1564 | 22 | DIRECT | INTERLOCK WITH AHU-1 | INLINE |

SCHEDULE NOTES:

1. PROVIDE SF-1 WITH MOTOR MOUNTED SPEED CONTROL AND FACTORY MOUNTED DISCONNECT SWITCH.
2. PROVIDE SF-1 WITH V-BANK FILTER SECTION AND DISPOSABLE MERV 13 FILTERS.
3. PROVIDE SF-1 WITH INSULATED FAN HOUSING.
4. PROVIDE FANS WITH EC MOTORS.

| SYM | DESCRIPTION | DATE | APPR |
|---|---|---|---|

NAVFAC

SEAL

JACOBS
1100 NORTH GLEBE ROAD SUITE 500
ARLINGTON, VIRGINIA 22201
TEL (571) 218-1000 FAX (571) 218-1600
A/E INFO

APPROVED
FOR COMMANDER NAVFAC
ACTIVITY 18 June 2015
SATISFACTORY TO DATE

DES DT DRW BT CHK CB
<<PM/DM>>
BRANCH MANAGER
CHIEF ENG/ARCH THC
FIRE PROTECTION KTD

DEPARTMENT OF THE NAVY
NAVAL FACILITIES ENGINEERING COMMAND
NAVAL FACILITIES ENGINEERING COMMAND
MARINE CORPS BASE – QUANTICO
QUANTICO, VA
P-635 ASP EXPANSION
MECHANICAL SCHEDULES

SCALE: 1:50
EPROJECT NO.: 1312142
CONSTR. CONTR. NO.
NAVFAC DRAWING NO. 13072343
SHEET 127 OF 201

MB-601

DRAWFORM REVISION: 10 MARCH 2009

FILE NAME: C:\pwworking\gbno\travledp\d0751239\BLDG635-131214Z-M601.dwg LAYOUT NAME: Layout1 PLOTTED: Tuesday, June 09, 2015 - 7:55am USER: travledp