NAVFAC
Naval Facilities Engineering Command
NAVFAC WASHINGTON

WORK ORDER NO.
N40080-14-1157388

PWB # 2012031

RFP

Academic Instruction Facility, TECOM Schools

At the

Marine Corps Base, Quantico, VA

P-677 for MILCON

PREPARED BY:
Clark Nexsen
6160 Kempsville Circile, Suite 200A
Norfolk, VA 23502

(Contract N40080-10-D-0303)

REQUEST FOR PROPOSAL PREPARED BY:

Architecture: J. Patrick Gallagher, AIA
Interior: Leslie M. Vollbrecht, CID
Structure: Staci S. Keller, PE
Mechanical/Plumbing: Brian A. Turner, PE
Civil: Greg T. Haack, PE
Electrical: Daniel W. Roberts, PE
Fire Protection: Kevin Kimmel, PE

Dewey S. Jones, AIA 2-3-2014

Submitted By: Signature Date:

Jay Blumenkrantz

RFP Approved By CI Team Lead/PMEB Signature Date:

Kamel El-Ali

Design Manager: Signature Date:

THIS PAGE HAS BEEN INTENTIONALLY LEFT BLANK

PART ONE - PROPOSAL FORMS & DOCUMENTS

PART TWO - GENERAL REQUIREMENTS

THIS PAGE HAS BEEN INTENTIONALLY LEFT BLANK

1.0 Table of Contents (RFP Parts 2-6)

1. **PART 2 – GENERAL REQUIREMENTS**

01 14 00.05 20 WORK RESTRICTIONS FOR DESIGN-BUILD
01 20 00.05 20 PRICE AND PAYMENT PROCEDURES FOR DESIGN-BUILD
01 30 00.05 20 ADMINISTRATIVE REQUIREMENTS FOR DESIGN-BUILD
01 31 19.05 20 POST AWARD MEETINGS
01 32 16.00 20 DESIGN AND CONSTRUCTION PROGRESS DOCUMENTATION
01 32 17.05 20 NETWORK ANALYSIS SCHEDULES (NAS) FOR DESIGN-BUILD
01 33 00.05 20 CONSTRUCTION SUBMITTAL PROCEDURES
01 33 10.05 20 DESIGN SUBMITTAL PROCEDURES
01 33 29.00 20 SUSTAINABLE REQUIREMENTS
01 35 13.05 20 SPECIAL PROJECT PROCEDURES FOR DESIGN-BUILD
01 35 26.05 20 GOVERNMENT SAFETY REQUIREMENTS FOR DESIGN-BUILD
01 45 00.05 20 DESIGN AND CONSTRUCTION QUALITY CONTROL
01 50 00.05 20 TEMPORARY FACILITIES AND CONTROLS FOR DESIGN-BUILD
01 57 19.00 20 TEMPORARY ENVIRONMENTAL CONTROLS
01 74 19.05 20 CONSTRUCTION AND DEMOLITION WASTE MANAGEMENT FOR DESIGN-BUILD
01 78 24.00 20 FACILITY ELECTRONIC OPERATION AND MAINTENANCE SUPPORT INFORMATION (eOMSI)

2. **PART 3 – PROJECT PROGRAM**

CHAPTER 1 & 2. PROJECT DESCRIPTION AND PROJECT OBJECTIVES
CHAPTER 3. SITE ANALYSIS
CHAPTER 4. SPACE TABULATION FORM
CHAPTER 5. ROOM REQUIREMENTS
CHAPTER 6. ENGINEERING SYSTEMS REQUIREMENTS

3. **PART 4 – PERFORMANCE TECHNICAL SPECIFICATIONS**

A10 FOUNDATIONS
A20 BASEMENT CONSTRUCTION
B10 SUPERSTRUCTURE
B20 EXTERIOR ENCLOSURE
B30 ROOFING
C10 INTERIOR CONSTRUCTION
C20 STAIRS
C30 INTERIOR FINISHES
D10 CONVEYING
D20 PLUMBING
D30 HVAC
D40 FIRE PROTECTION
D50 ELECTRICAL
E10 EQUIPMENT
E20 FURNISHINGS
F10 SPECIAL CONSTRUCTION – NOT APPLICABLE
F20 SELECT BLDG DEMOLITION – NOT APPLICABLE
G10 SITE PREPARATIONS
G20 SITE IMPROVEMENTS

G30 SITE CIVIL/MECHANICAL UTILITIES
G40 SITE ELECTRICAL UTILITIES
Z10 GENERAL PERFORMANCE TECHNICAL SPECIFICATION

4. PART 5 – PRESCRIPTIVE SPECIFICATIONS

01 91 00.00 40	COMMISSIONING
14 24 00	HYDRAULIC ELEVATORS
23 08 00.00 10	COMMISSIONING OF HVAC SYSTEMS

5. PART 6 – ATTACHMENTS

A. LIST OF ANTICIPATED PERMITS
B. PERFORMANCE ASSESSMENT PLAN – MONTHLY EVALUATION FORM
C. QUANTICO FIRE & EMERGENCY SERVICES FACILITY DESIGN & CONSTRUCTION REQUIREMENTS
D. FLOW TEST REPORT
E. GEOTECHNICAL REPORT
F. PUBLIC WORKS/FLSS UTILITIES OUTAGE REQUEST
G. REMOVABLE BOLLARD REQUIREMENTS
H. FIRE TRUCK TURNING PERFORMANCE ANALYSIS
I. QUANTICO EXCAVATION PERMIT PROCEDURES AND SAMPLE PERMIT
J. NAVRAMP GUIDEBOOK
K. CONTRACTOR SCREENING POLICY – MARINE CORPS BASE ORDER
L. SPECIFICATIONS FOR DIGITAL DATA
M. LID APPLICATION AND DESIGN GUIDANCE
N. CONSTRUCTION WASTE MANAGEMENT REPORT
O. NAVFAC P-307 CRANE GUIDE
P. MARINE CORPS BASE QUANTICO REFRIGERANT SERVICE FORM AND ODS EQUIPMENT REPORTING FORM
Q. PULL-UP BAR
R. FACILITY RECOGNITION PLAQUE
S. A/V DRAWINGS
T. MCB QUANTICO MAXIMO REQUIREMENTS
U. COC PAD ELECTRICAL PLUG INFORMATION
V. SECURITY PLANS
W. DRAWINGS

SECTION 01 14 00.05 20

WORK RESTRICTIONS FOR DESIGN-BUILD
01/12

PART 1 GENERAL

1.1 REFERENCES

The publications listed below form a part of this section to the extent referenced. The publications are referred to within the text by the basic designation only.

AMERICAN SOCIETY OF HEATING, REFRIGERATING AND AIR-CONDITIONING ENGINEERS (ASHRAE)

ASHRAE 90.1 - SI	(2010; Errata 1-2 2011; INT 2-12 2011; Addenda A, B, C, G, H, J, K, O, P, S, Y, Z, BZ, CG, CI and DS 2012; Errata 3-9 2012; INT 13-16 2012; Errata 10-15 2013; INT 17 2013) Energy Standard for Buildings Except Low-Rise Residential Buildings

1.2 SUBMITTALS

The use of a "G" following a submittal indicates that a Government approval action is required. Submit the following in accordance with Section 01 33 10.05 20 DESIGN SUBMITTAL PROCEDURES and Section 01 33 00.05 20 CONSTRUCTION SUBMITTAL PROCEDURES.

SD-01 Preconstruction Submittals

List of contact personnel; G

Personnel List; G

Vehicle List; G

Statement of Acknowledgement Form SF 1413; G

1.3 SPECIAL SCHEDULING REQUIREMENTS

a. Permission to interrupt any Activity roads, railroads, and/or utility service shall be requested in writing a minimum of 15 calendar days prior to the desired date of interruption.

b. NMCI Contractor Access: The NMCI Contractor must be allowed access to the facility towards the end of construction (finishes 90 percent complete, rough-in 100 percent complete, Inside Plant (ISP)/Outside Plant (OSP) infrastructure in place) to provide equipment in the telecommunications rooms and make final connections. The Contractor will be required to coordinate their efforts with the NMCI contractor to facilitate joint use of building spaces during the final phases of construction and work the coordination effort into the construction schedule. Requirements for NMCI are specified in Part 4, D50 ELECTRICAL and G40 SITE ELECTRICAL UTILITIES.

c. Contractor personnel working on the site shall attend a one hour UXO Briefing provided by EOD at the Marine Corps Base Quantico. The UXO Briefing addresses potential unexploded ordnance on the base. Reservations for the UXO Briefing must be made one month prior to the briefing. The contractor shall contact Range Control through the ROICC Contracting Officer for the EOD brief. The Contractor shall contact Range control through the ROICC Contracting Officer for the EOD brief.

1.4 CONTRACTOR ACCESS AND USE OF PREMISES

1.4.1 Activity Regulations

Ensure that Contractor personnel employed on the Activity become familiar with and obey Activity regulations including safety, fire, traffic and security regulations. Keep within the limits of the work and avenues of ingress and egress. To minimize traffic congestion, delivery of materials shall be outside of peak traffic hours (6:30 to 8:00 a.m. and 3:30 to 5:00 p.m.) unless otherwise approved by the Contracting Officer. Wear hard hats in designated areas. Do not enter any restricted areas unless required to do so and until cleared for such entry. The Contractor's equipment shall be conspicuously marked for identification.

1.4.1.1 Subcontractors and Personnel Contacts

Furnish a list of contact personnel of the Contractor and subcontractors including addresses and telephone numbers for use in the event of an emergency. As changes occur and additional information becomes available, correct and change the information contained in previous lists.

1.4.1.2 Identification Badges

Application for and use of badges will be as directed. Obtain access to the installation by participating in the Navy Commercial Access Control System (NCACS) or by obtaining passes each day from the Base Pass and Identification Office. Costs for obtaining passes through the NCACS are the responsibility of the Contractor. One-day passes, issued through the Base Pass and Identification Office will be furnished without charge. Furnish a completed EMPLOYMENT ELIGIBILITY VERIFICATION (DHS FORM I-9) form for all personnel requesting badges. This form is available at http://www.uscis.gov/portal/site/uscis by searching or selecting Employment Verification (Form I-9). Immediately report instances of lost or stolen badges to the Contracting Officer.

a. NCACS Program: NCACS is a voluntary program in which Contractor personnel who enroll, and are approved, are subsequently granted access to the installation for a period up to one year, or the length of the contract, whichever is less, and are not required to obtain a new pass from the Base Pass and Identification Office for each visit. The Government performs background screening and credentialing. Throughout the year the Contractor employee must continue to meet background screening standards. Periodic background screenings are conducted to verify continued NCACS participation and installation access privileges. Under the NCACS program, no commercial vehicle inspection is required, other than for Random Anti-Terrorism Measures (RAM) or in the case of an elevation of Force Protection Conditions (FPCON). Information on costs and requirements to participate and enroll in NCACS is available at http://www.rapidgate.com/vendors/how-to-enroll or by calling 1-877-727-4342. Contractors should be aware that the costs incurred to obtain NCACS credentials, or costs related to any means of

access to a Navy Installation, are not reimbursable. Any time invested, or price(s) paid, for obtaining NCACS credentials will not be compensated in any way or approved as a direct cost of any contract with the Department of the Navy.

b. One-Day Passes: Participation in the NCACS is not mandatory, and if the Contractor chooses not to participate, the Contractor's personnel will have to obtain daily passes, be subject to daily mandatory vehicle inspection, and will have limited access to the installation. The Government will not be responsible for any cost or lost time associated with obtaining daily passes or added vehicle inspections incurred by non-participants in the NCACS.

1.4.1.3 Personnel Entry Approval

Failure to obtain entry approval will not affect the contract price or time of completion.

1.4.1.4 Smoking Policy

Smoking is prohibited within and outside of all buildings on installations under the cognizance of NAVFAC Washington except in designated smoking areas. Discarding tobacco materials other than into designated tobacco receptacles is considered littering and is subject to fines. See the ROICC for locations of designated smoking areas.

1.4.2 Working Hours

Regular working hours shall consist of an 8 1/2 hour period or established by the Contracting Officer, between 7 a.m. and 3:30 p.m., or as directed by the Contracting Officer Monday through Friday, excluding Government holidays.

1.4.3 Work Outside Regular Hours

Work outside regular working hours requires Contracting Officer approval. Make application 15 calendar days prior to such work to allow arrangements to be made by the Government, giving the specific dates, hours, location, type of work to be performed, contract number and project title. Based on the justification provided, the Contracting Officer may approve work outside regular hours. During periods of darkness, the different parts of the work shall be lighted in a manner approved by the Contracting Officer.

1.4.4 Utility Cutovers and Interruptions

a. Make utility cutovers and interruptions after normal working hours or on Saturdays, Sundays, and Government holidays. Conform to procedures required in the paragraph "Work Outside Regular Hours."

b. Ensure that new utility lines are complete, except for the connection, before interrupting existing service.

c. Interruption to water, sanitary sewer, storm sewer, telephone service, electric service, air conditioning, heating, fire alarm, compressed air, and shall be considered utility cutovers pursuant to the paragraph entitled "Work Outside Regular Hours."

1.4.4.1 Location of Underground Utilities

Obtain digging permits prior to start of excavation by contacting the Contracting Officer 15 calendar days in advance. Scan the construction site with electromagnetic or sonic equipment, and mark the surface of the ground or paved surface where existing underground utilities or utilities encased in pier structures are discovered. Verify the elevations of existing piping, utilities, and any type of underground or encased obstruction not indicated to be specified or removed but indicated or discovered during scanning in locations to be traversed by piping, ducts, and other work to be conducted or installed.

a. Notification Prior to Excavation: Notify the Contracting Officer at least 15 days prior to starting excavation work. Contact Miss Utility 48 hours prior to excavating. Contractor is responsible for marking all utilities not marked by Miss Utility.

1.5 SECURITY REQUIREMENTS

Contract Clause "FAR 52.204-2, Security Requirements and Alternate II," "FAC 5252.236-9301, Special Working Conditions and Entry to Work Area," and the following apply:

1.5.1 Vehicle List

Submit an original list of vehicles to be utilized at the work site with the following information for each vehicle:

1. Make
2. Year
3. Model
4. License number
5. Registered owner

1.5.2 Passes

Submit request for personnel and vehicle passes together to the Contracting Officer 15 days prior to date of entry. Include the Certificate of Insurance for Contractor and Subcontractor(s) and the Statement of Acknowledgement Form SF 1413 with the submittal. Passes will normally be issued within 21 days.

1.5.3 Contractor Personnel Requirements

Failure to obtain entry approval will not affect the contract price or time of completion.

1.5.4 Employment Restrictions for Quantico MCB

The Contractor shall not employ for any work required by this contract, any person who is a nonimmigrant as described in section 101(a)(15)(H)(ii) of the Immigration and Nationality Act (8 U.S.C. 1101(a)(15)(H)(ii), an alien having a residence in a foreign country which he has no intention of abandoning and who is coming to the United States to perform temporary services or labor.

1.5.5 Personnel List

Submit for approval, at least 15 days prior to the desired date of entry,

an original alphabetical list of personnel who require entry into Government property to perform work on the project. Furnish for each person:

a. Name
b. Date and place of birth
c. Citizenship
d. Home address
e. Social security number
f. Current pass expiration date
g. Naturalization or Alien Registration number
h. Passport number, place of issue, and expiration date

The request for personnel passes shall be accompanied with the following certification:

"I hereby certify that all personnel on this list are either born U.S. citizens, naturalized U.S. citizens with the naturalization number shown, or legal aliens with the alien registration number indicated."
Signature/Firm Name

1.5.6 Citizenship Requirements

Contractor personnel will not be admitted to the work site without approval from the Contracting Officer. Work under this contract is restricted to U.S. citizens and legal alien status in accordance with MCBQ 4200.3 - Contractor Screening Policy. Refer to Part 6 Attachments for a copy of this policy.

1.5.7 Documents Acceptable for Proof of Citizenship

a. Birth registration card
b. Certificate of live birth, birth certificate
c. Certificate of Naturalization
d. Certificate of registration
e. DD-214 (Must Cite Birthplace)
f. DD Form 4 (Contract for Enlistment and Must Cite Birthplace)
g. DD 1966 (Application for Enlistment)
h. Military discharge papers (must cite birthplace)
i. Delayed birth certificate
j. Hospital birth certificate
k. Marriage license certificate
l. Merchant marine certificate
m. Military officer ID card
n. Notification of birth registration
o. USA passport

1.6 MARINE CORPS BASE, QUANTICO, VA

MCB Quantico is considered a controlled perimeter and all construction personnel and vehicles must undergo security checks to access the site.

Access to the site requires that all personnel attend one (1) Unexploded Ordinance (UXO) class.

This project shall meet the requirements of the Base Exterior Architecture Plan (BEAP).

This project is required to meet the Energy Policy Act 2005 (EPAct)

directive of achieving energy performance at 30% below ASHRAE 90.1 - SI-2004 Standard (NAVFAC Engineering Command Bulletin 2007-5).

This project must meet USGBC LEED 2009 standards for receiving Silver certification. Refer to RFP Part Two, Section 01 33 10.05 20 DESIGN SUBMITTAL PROCEDURES, for additional information.

Photographs may not be taken without permission from Public Works Officer and the ROICC. Verify with them before any photographs are taken.

PART 2 PRODUCTS

Not used.

PART 3 EXECUTION

Not used.

-- End of Section --

SECTION 01 20 00.05 20

PRICE AND PAYMENT PROCEDURES FOR DESIGN-BUILD
01/12

PART 1 GENERAL

1.1 REFERENCES

The publications listed below form a part of this specification to the extent referenced. The publications are referred to within the text by the basic designation only.

U.S. ARMY CORPS OF ENGINEERS (USACE)

EP-1110-1-8 (2009) Construction Equipment Ownership and Operating Expense Schedule, Vol 1-12

1.2 SUBMITTALS

Government approval is required for submittals with a "G" designation; submittals not having a "G" designation are for Contractor Quality Control approval. The following shall be submitted in accordance with Section 01 33 10.05 20 DESIGN SUBMITTAL PROCEDURES and Section 01 33 00.05 20 CONSTRUCTION SUBMITTAL PROCEDURES:

SD-01 Preconstruction Submittals

Schedule of Prices; G

1.3 SCHEDULE OF PRICES

1.3.1 Data Required

This contract requires the use of a cost-loaded Network Analysis Schedule (NAS). The information required for the Schedule of Prices will be entered as an integral part of the Network Analysis Schedule. Within 15 calendar days of notice of award, prepare and deliver to the Contracting Officer a Schedule of Prices (construction contract) as directed by the Contracting Officer. Provide a detailed breakdown of the contract price, giving quantities for each of the various kinds of work, unit prices, and extended prices. Costs shall be summarized and totals provided for each construction category.

1.3.2 Schedule Instructions

Payments will not be made until the Schedule of Prices has been submitted to and accepted by the Contracting Officer. For design phase progress payment(s), the Schedule of Prices or Earned Value Report from the Cost Loaded CPM shall include detailed design activities and general (summarized) approach for the construction phase(s) of the project. The Schedule of Prices or Earned Value Report shall be fully developed with

detailed construction line items as design progresses. The complete design and construction Schedule of Prices or Earned Value Report shall be submitted and accepted prior to starting construction work.

For Fast-Tracked or Critical Path Submittals of construction projects, the Schedule of Prices shall include detailed design and construction line items for each fast-tracked/ critical path phase(s), submitted to and accepted by the Contracting Officer during the Post Award Kickoff Meetings and confirmed prior to starting construction work in that phase. Additionally, the Schedule of Prices shall be separated as follows:

a. Primary Facility/s Cost Breakdown:

Defined as work on the primary facility/s out to the 1.5 m (5 foot) line. Work out to the 1.5 m (5 foot) line shall include construction encompassed within a theoretical line 1.5 m (5 foot) from the face of exterior walls and shall include attendant construction, such as pad mounted HVAC equipment, that may extend beyond the 1.5 m (5 foot) line.

(1) Provide a cost breakout for all Primary Facility features that support Low Impact Development (LID), such as vegetated roof and rainwater harvesting features. The sum of the Primary Facility Cost above - a. and these Primary Facility LID sub-items - (1) shall equal the total Primary Facility cost. Provide a subtotal cost of all Primary Facility LID sub-items on the Schedule of Prices at design complete and project closeout.

b. Supporting Facilities Cost Breakdown:

Defined as site work, including incidental work, outside the 1.5 m (5 foot) line.

(1) Provide a cost breakout for all Supporting Facilities features that support LID, such as bioswales, permeable paving, infiltration basins, tree box filters, etc.. The sum of the Supporting Facilities Cost above - b. and these Supporting Facilities LID sub-items - (1) shall equal the total Supporting Facilities cost. Provide a subtotal cost of all Supporting Facilities LID sub-items on the Schedule of Prices at design complete and project closeout.

1.3.3 Real Property Assets

Provide the Draft and Interim DD Form 1354, Transfer and Acceptance of Military Real Property filled in with the appropriate Real Property Unique Identifiers (RPUID) and related construction Category Codes. Provide the Draft DD Form 1354 that uses the appropriate division of the RPUIDs/ Category Codes to represent the designed real property assets that apply to this contract and include all associated cost. The Contractor shall meet with the Contracting Officer and the Real Property Accounting Officer during the Post Award Kickoff Meeting and the Project Closeout Meetings to modify and include any necessary changes to the DD Form 1354. The Contractor shall provide the Interim DD Form 1354 that uses the appropriate division of the RPUIDs/ Category Codes to represent the final constructed facility and include all associated cost. Coordinate the Contractor's Price and Payment structure with the structure of the RPUIDs/ Category Codes.

Divide detailed asset breakdown into the RPUIDs and related construction Category Codes and populate associated costs which represent all aspects of

the work. Where assets diverge into multiple RPUID/ Category Codes, divide the asset and provide the proportion of the assets in each RPUID/ Category Code. Assets and related RPUID/ Category Codes may be modified by the Contracting Officer as necessary during the course of the work. Coordinate identification and proportion of these assets with the Government Real Property Accounting Officer.

Cost data accumulated under this section are required in the preparation of DD Form 1354. Coordinate with section 01 33 10.05 20 DESIGN SUBMITTAL PROCEDURES in paragraph titled "DD Form 1354".

1.3.4 Schedule Requirements for HVAC TAB

The field work requirements of TAB work required by RFP Part 4 D30, HVAC shall be broken down in the Schedule of Prices and in the Construction Progress Documentation by separate line items which reflect measurable deliverables. Specific payment percentages for each line item shall be determined on a case by case basis for each contract. The line items shall be as follows:

a. Approval of Design Review Report: The TABS Agency is required to conduct a review of the project plans and specifications to identify any feature, or the lack thereof, that would preclude successful testing and balancing of the project HVAC systems. The resulting findings shall be submitted to the Government to allow correction of the design. The progress payment shall be issued after review and approval of the report.

b. Approval of the pre-field engineering report: The TABS Agency submits a report which outlines the scope of field work. The report shall contain details of what systems will be tested, procedures to be used, sample report forms for reporting test results and a quality control checklist of work items that must be completed before TABS field work commences.

c. Season I field work: Incremental payments are issued as the TABS field work progresses. The TABS Agency mobilizes to the project site and executes the field work as outlined in the pre-field engineering report. The HVAC water and air systems are balanced and operational data shall be collected for one seasonal condition (either summer or winter depending on project timing).

d. Approval of Season I report: On completion of the Season I field work, the data is compiled into a report and submitted to the Government. The report is reviewed, and approved, after ensuring compliance with the pre-field engineering report scope of work.

e. Completion of Season I field QA check: Contract QC and Government representatives meet the TABS Agency at the jobsite to retest portions of the systems reported in the Season I report. The purpose of these tests are to validate the accuracy and completeness of the previously submitted Season I report.

f. Approval of Season II report: The TABS Agency completes all Season II field work, which is normally comprised mainly of taking heat transfer temperature readings, in the season opposite of that under which Season I performance data was compiled. This data shall be compiled into a report and submitted to the Government. On completion of submittal review to ensure compliance with the pre-field engineering report scope, progress payment is issued. Progress payment is less than that issued for the Season I report since most of the water and air balancing work effort is completed

under Season I.

1.3.5 Schedule Requirements for LEED Certification

Submittals to the U.S. Department of Energy's Federal Energy Management Program, High Performance Federal Buildings Database and to USGBC for LEED certification as required in 01 33 10.05 20 DESIGN SUBMITTAL PROCEDURES shall be included as activities in the NAS. A separate line item equal to 0.5% of the contract/task order value and identified as - LEED Certification, shall be included in the contractor's Schedule of Prices. The unit of measure for this line item shall be lump sum without any payment made until the specified level of LEED certification is obtained from USGBC and the Certification documentation is provided to the Contracting Officer in accordance with Section 01 33 10.05 20.

1.4 CONTRACT MODIFICATIONS

In conjunction with the Contract Clause "DFARS 252.236-7000, Modification Proposals-Price Breakdown," and where actual ownership and operating costs of construction equipment cannot be determined from Contractor accounting records, equipment use rates shall be based upon the applicable provisions of the EP-1110-1-8.

1.5 CONTRACTOR'S INVOICE AND CONTRACT PERFORMANCE STATEMENT

1.5.1 Content of Invoice

Requests for payment will be processed in accordance with the Contract. Clause FAR 52.232-27, Prompt Payment Construction Contracts and FAR 52.232-5, Payments Under Fixed-Price Construction Contracts. The Requests for payment shall include the documents listed below:

a. The Contractor's invoice, on NAVFAC Form 7300/30 furnished by the Government, showing in summary form, the basis for arriving at the amount of the invoice. Form 7300/30 shall include certification by Quality Control (QC) Manager as required by the contract.

b. The Estimate for Voucher/ Contract Performance Statement on NAVFAC Form 7300/31 furnished by the Government, showing in detail: the estimated cost, percentage of completion, and value of completed performance for each of the construction categories stated in this contract. Use LANTNAVFACENGCOM Form 4-330/110 (New 7/84) on NAVFAC Atlantic contracts when a Monthly Estimate for Voucher is required.

c. Updated Project Schedule and reports required by the contract

d. Contractor Safety Self Evaluation Checklist

e. Other supporting documents as requested

f. Updated copy of submittal register.

g. Invoices not completed in accordance with contract requirements will be returned to the Contractor for correction of the deficiencies.

h. Subcontractor and supplier payment certification.

i. Materials on Site.

j. Affidavit to accompany invoice (LANTDIV NORVA Form 4-4235/4 (Rev.5/81)).

h. Monthly Work-hour report

i. Solid Waste Disposal Report

1.5.2 Submission of Invoices

If NFAS Clause 5252.232-9301 is included in the contract, the documents listed in paragraph titled " Content of Invoice" above shall be provided in their entirety as an attachment in Wide Area Work Flow (WAWF) for each invoice submitted. The maximum size of each WAWF attachment is two megabytes, but there are no limits on the number of attachments. If a document cannot be attached in WAWF due to system or size restriction it shall be provided as instructed by the Contracting Officer. All other paper invoices shall be forwarded with specific marking on the envelope. This marking shall be in the front lower left hand corner, in large letters, "INVOICES - ENCLOSED."

Monthly invoices and supporting forms for work performed through the anniversary award date of the contract shall be submitted to the Contracting Officer within 5 calendar days of the date of invoice For example, contract award date is the 7th of the month, the date of each monthly invoice shall be the 7th and the invoice shall be submitted by the 12th of the month.

1.5.3 Final Invoice

a. A final invoice shall be accompanied by the certification required by DFARS 252.247.7023 TRANSPORTATION OF SUPPLIES BY SEA, and the Contractor's Final Release. If the Contractor is incorporated, the Final Release shall contain the corporate seal. An officer of the corporation shall sign and the corporate secretary shall certify the Final Release.

b. For final invoices being submitted via WAWF, the original Contractor's Final Release Form and required certification of Transportation of Supplies by Sea must be provided directly to the respective Contracting Officer prior to submission of the final invoice. Once receipt of the original Final Release Form and required certification of Transportation of Supplies by Sea has been confirmed by the Contracting Officer, the Contractor shall then submit final invoice and attach a copy of the Final Release Form and required certification of Transportation of Supplies by Sea in WAWF.

c. Final invoices not accompanied by the Contractor's Final Release and required certification of Transportation of Supplies by Sea will be considered incomplete and will be returned to the Contractor.

1.6 PAYMENTS TO THE CONTRACTOR

Payments will be made on submission of itemized requests by the Contractor which comply with the requirements of this section, and will be subject to reduction for overpayments or increase for underpayments made on previous payments to the Contractor.

1.6.1 Obligation of Government Payments

The obligation of the Government to make payments required under the provisions of this contract will, at the discretion of the Contracting Officer, be subject to reductions and/or suspensions permitted under the

FAR and agency regulations including the following in accordance with "FAR 32.503-6:

a. Reasonable deductions due to defects in material or workmanship;

b. Claims which the Government may have against the Contractor under or in connection with this contract;

c. Unless otherwise adjusted, repayment to the Government upon demand for overpayments made to the Contractor; and

d. Failure to provide up to date record drawings not current as stated in Contract Clause "FAC 5252.236-9310, Record Drawings."

1.6.2 Payment for Onsite and Offsite Materials

Progress payments may be made to the contractor for materials delivered on the site, for materials stored off construction sites, or materials that are in transit to the construction sites under the following conditions:

a. FAR 52.232-5(b) Payments Under Fixed Price Construction Contracts.

b. Materials delivered on the site but not installed, including completed preparatory work, and off-site materials to be considered for progress payment shall be major high cost, long lead, special order, or specialty items, not susceptible to deterioration or physical damage in storage or in transit to the construction site. Examples of materials acceptable for payment consideration include, but are not limited to, structural steel, non-magnetic steel, non-magnetic aggregate, equipment, machinery, large pipe and fittings, precast/prestressed concrete products, plastic lumber (e.g., fender piles/curbs) and high-voltage electrical cable. Materials not acceptable for payment include consumable materials such as nails, fasteners, conduits, gypsum board, glass, insulation, and wall coverings.

c. Materials to be considered for progress payment prior to installation shall be specifically and separately identified in the Contractor's estimates of work submitted for the Contracting Officer's approval in accordance with Schedule of Prices requirement of this contract. Requests for progress payment consideration for such items shall be supported by documents establishing their value and that the title requirements of the clause at FAR 52.232-5 have been met.

d. Materials are adequately insured and protected from theft and exposure.

e. Provide a written consent from the surety company with each payment request for offsite materials.

f. Materials to be considered for progress payments prior to installation shall be stored either in Hawaii, Guam, Puerto Rico, or the Continental United States. Other locations are subject to written approval of the Contracting Officer.

PART 2 PRODUCTS

Not used.

PART 3 EXECUTION

Not used.

-- End of Section --

THIS PAGE HAS BEEN INTENTIONALLY LEFT BLANK

SECTION 01 30 00.05 20

ADMINISTRATIVE REQUIREMENTS FOR DESIGN-BUILD
11/07

PART 1 GENERAL

1.1 SUBMITTALS

The use of a "G" following a submittal indicates that a Government approval action is required. Submit the following in accordance with Section 01 33 10.05 20 DESIGN SUBMITTAL PROCEDURES and Section 01 33 00.05 20 CONSTRUCTION SUBMITTAL PROCEDURES.

SD-01 Preconstruction Submittals

Insurance; G

1.2 MINIMUM INSURANCE REQUIREMENTS

Procure and maintain during the entire period of performance under this contract the following minimum insurance coverage:

a. Comprehensive general liability: $500,000 per occurrence

b. Automobile liability: $200,000 per person, $500,000 per occurrence for bodily injury, $20,000 per occurrence for property damage

c. Workmen's compensation as required by Federal and State workers' compensation and occupational disease laws.

d. Employer's liability coverage of $100,000, except in States where workers compensation may not be written by private carriers,

e. Others as required by the State.

1.3 CONTRACTOR PERSONNEL REQUIREMENTS

1.3.1 Subcontractor Special Requirements

1.3.1.1 Asbestos Containing Material

All contract requirements of PART 4, F20 SELECTIVE BUILDING DEMOLITION, assigned to the Private Qualified Person (PQP) shall be accomplished directly by a first tier subcontractor.

1.3.1.2 HVAC TAB

All contract requirements of TAB work required by PART 4 D30, HVAC, shall be accomplished directly by a first tier subcontractor. No TAB work required by PART 4, D30, HVAC, shall be accomplished by a second tier subcontractor.

1.3.1.3 Qualified Testing Organization

All contract requirements of work required to be performed by a Qualified Testing Organization in PART 4, D50 ELECTRICAL and G40 SITE ELECTRICAL UTILITIES, shall be accomplished directly by a first tier subcontractor.

No work to be performed by a Qualified Testing Organization, required by PART 4, D50 and G40 shall be accomplished by a second tier subcontractor.

1.4 SUPERVISION

Have at least one qualified supervisor capable of reading, writing, and conversing fluently in the English language on the job site during working hours. In addition, the Quality Control (QC) representative shall also have fluent English communication skills.

1.5 AVAILABILITY OF CADD DRAWING FILES

After award and upon request, the electronic "Computer-Aided Drafting and Design (CADD)" drawing files will be made available to the Contractor for use in preparation of construction drawings and data related to the referenced contract subject to the following terms and conditions.

Data contained on these electronic files shall not be used for any purpose other than as a convenience in the preparation of construction drawings and data for the referenced project. Any other use or reuse shall be at the sole risk of the Contractor and without liability or legal exposure to the Government. The Contractor shall make no claim and waives to the fullest extent permitted by law, any claim or cause of action of any nature against the Government, its agents or sub consultants that may arise out of or in connection with the use of these electronic files. The Contractor shall, to the fullest extent permitted by law, indemnify and hold the Government harmless against all damages, liabilities or costs, including reasonable attorney's fees and defense costs, arising out of or resulting from the use of these electronic files.

These electronic CADD drawing files are not construction documents. Differences may exist between the CADD files and the corresponding construction documents. The Government makes no representation regarding the accuracy or completeness of the electronic CADD files, nor does it make representation to the compatibility of these files with the Contractors hardware or software. In the event that a conflict arises between the signed and sealed construction documents prepared by the Government and the furnished CADD files, the signed and sealed construction documents shall govern. The Contractor is responsible for determining if any conflict exists. Use of these CADD files does not relieve the Contractor of duty to fully comply with the contract documents, including and without limitation, the need to check, confirm and coordinate the work of all contractors for the project.

If the Contractor uses, duplicates and/or modifies these electronic CADD files for use in producing construction drawings and data related to this contract, all previous indicia of ownership (seals, logos, signatures, initials and dates) shall be removed.

1.6 CLEANUP

Leave premises "broom clean." Clean interior and exterior glass surfaces exposed to view; remove temporary labels, stains and foreign substances; polish transparent and glossy surfaces; vacuum carpeted and soft surfaces. Clean equipment and fixtures to a sanitary condition. Replace filters of operating equipment. Clean debris from roofs, gutters, downspouts and drainage systems. Sweep paved areas and rake clean landscaped areas. Remove waste and surplus materials, rubbish and construction facilities from the site.

PART 2 PRODUCTS

Not used.

PART 3 EXECUTION

Not used.

-- End of Section --

THIS PAGE HAS BEEN INTENTIONALLY LEFT BLANK

SECTION 01 31 19.05 20

POST AWARD MEETINGS
06/13

PART 1 GENERAL

1.1 SUMMARY

This document includes post-award requirements for project kickoff and subsequent design and preconstruction meetings.

1.2 SUBMITTALS

The use of a "G" following a submittal indicates that a Government approval action is required. Submit the following in accordance with Section 01 33 10.05 20 DESIGN SUBMITTAL PROCEDURES.

SD-01 Preconstruction Submittals

Design Submittal Packaging Proposal; G

Project Schedule; G

Performance Assessment Plan (PAP); G

Design Presentation Concept Site and Floor Plans; G

CDW Facilitator Experience Resume; G

CDW Preliminary Concept Design; G

CDW Cost Estimate; G

Concept Design Workshop Report; G

1.3 POST AWARD KICKOFF MEETING

The Post Award Kickoff (PAK) meeting is made up of Contract Administration, Concept Design Presentation/Design Development or Concept Design Workshop (CDW), Partnering, and Scheduling. If mutually beneficial to the Contractor and the Government, these four elements may be addressed in a single multi day meeting but most often multiple scheuled meetings are required. Schedule a separate meeting or a seperate day of the multiday PAK, to accomplish the Design Presentation/Design Development Meeting or Concept Design Workshop(CDW).

1.3.1 PAK Meeting Schedule and Location

Within 35 calendar days after contract award, and prior to commencing work, meet with the Contracting Officer for the PAK meeting(s). The meeting shall be located at a specific time and place to be determined by the Contracting Officer.

1.3.2 PAK Meeting Outcomes

The meeting(s) outcomes are:

a. Integrate the Contractor and all client representatives into the project team.

b. Achieve consensus from the project team on any issues and concerns with the Contractor's technical proposal and the User's functional requirements. Confirm the design is within the project budget.

c. Establish and explain policies and procedures for completion of a successful proect.

d. Establish clear lines of communication and points of contact for Government and Contractor team members.

e. Obtain an acceptable conceptual design including floor and site plans, signed by the client, Contractor and other key team members.

f. Establish project design schedule, design submittal packaging, and preliminary construction schedule in accordance with Secton 01 32 17.05 20 NETWORK ANALYSIS SCHEDULE (NAS) FOR DESIGN-BUILD. Discuss design milestones and events that will be included in the Quality Control Communication Plan.

g. Establish clear expectations and schedules for facility turnover, providing DD Form 1354 asset management records, eOMSI submittals, and training of Government maintenance personnel.

h. Establish procedure for design packages reviews, Contractor's resolution to comments, and Government's role in review of packages.

i. Establish clear expectations for the Concept Design Workshop.

1.3.3 PAK Meeting Contractor Attendees

The following Contractor key personnel shall attend the PAK: Project Manager, Project Scheduler, Lead Designer-of-Record (DOR), Design Staff responsible for each architectural/engineering discipline when facility design is discussed, Superintendent, QC Manager, and the DQC Manager and the Commissioning Authority (CA). Optional attendees include: Principal, Assistant Project Manager, major subcontractors and specialized supplemental QC personnel.

1.3.4 Contract Administration

Contract administration roles and responsibilities will be addressed.

1.3.5 Design Presentation/Development (DP/D)

The Contractor shall lead discussions to develop an understanding of the facility design that the accepted technical proposal represents with the Government users and maintainers of the facility. Develop site plans, floor plans, exterior finish materials, and building elevations to conduct working sessions with the Government meeting attendees. The purpose of the DP/D Meeting is to confirm the appropriateness of the facility design and develop acceptable alternatives if changes are needed. The Contractor shall anticipate that Government Facility Users represented at the DP/D

Meeting will provide additional functional information. Incorporate functional design changes into the facility design as required to meet the needs of the Users. At the end of the DP/D Meeting the Contractor shall provide either assurance that the updated design can be built with-in the budget or identify potential cost modification items and establish a follow-on DP/D Meeting to finalize a design that will include trade-offs to bring the project within the budget.

1.3.5.1 Design Presentation/Development Contractor Meetings Attendees

The following Contractor key personnel shall attend the Design Presentation: Project Manager, Project Scheduler, Cost Estimator, Lead Designer of Record, Design Staff responsible for each architectural/engineering discipline when facility design is discussed, Major Subcontractors, and DQC.

1.3.6 Concept Design Workshop (CDW)

Provide a CONCEPT DESIGN WORKSHOP that meets the following requirements;

1.3.6.1 CDW General Requirements

a. Methodology. Concept a CDW for this project. This effort will examine project functions and requirements, quality and life safety costs, analyze alternate design concepts, expose and resolve project issues, and develop the final conceptual design.

b. Facilitator. Provide a Facilitator who is experienced in conducting Concept Design Workshops. Submit a CDW Facilitator Experience Resume to the Contracting Officer describing his experience. He or she will be responsible for leading the team in a timely manner, making sure that issues are pursued and resolved to the maximum extent possible, documenting meetings, organizing the design concept documents for on-site approval, and providing the Concept Design Workshop Report.

c. Contractor's Design Team. The primary functions of the Design Team will be to investigate, develop and present alternate design solutions. The entire Design Team will participate in all phases of the Concept Design Workshop effort and provide assistance to the Facilitator in development of the Concept Design Workshop Report, including most of the required documentation.

d. Concept Design Workshop Report. Produced almost entirely on-site, the Concept Design Workshop Report will summarize the final conceptual design.

e. Award Amount. At each contract stage, the Contractor shall verify that the concept is within the contract award amount.

1.3.6.2 CDW Procedures

a. Preliminary Work.
The Contractor's Design Team shall complete the following prior to the on-site workshop:

(1) Review the contract documents and references explaining the project scope and history.

(2) Prepare 3 concept designs that meet the requirements of the RFP.

(3) At the Post Award Kickoff meeting, the Design Team shall present the 3 concepts and their understanding of the project and interview the user(s) for the their functional requirements..

(4) Prepare and submit, at least 14 days in advance of the CDW, 15 copies of the CDW Preliminary Concept
Designs , a Basis of Design, and a statement that the concepts provided are within the award amount.

(5) Make arrangements for and provide an appropriate conference room convenient to the project site and/or Users for use by the Design Team and government participants during the workshop.

(6). Incorporate government comments for the concepts and produce at least 20 copies of the revised Concept document for distribution at the workshop.

(7). Facilitator conducts meeting with NAVFAC representatives before the CDW to review preparations, relationships, and the status of work to be accomplished.

b. On-Site Workshop.
The Design Team shall accomplish the following items during the on-site phase of the CDW. (Typically conducted in four to six working days, minimizing breaks so as to maintain momentum. The Design Team should expect longer than normal workdays.)

(1) On the first day of the workshop, meet with the using activity, Station and other Government representatives. The Facilitator will describe the CDW process and review the workshop agenda. The user(s) will provide a functional presentation. This is to reiterate to all participants the User(s) needs and desires. The intent is to make the design solution and issue resolution function-oriented.

(2) Present the concepts and respond to questions. Decide on one of the concepts and modify as needed.

(3) Participate in a comment/creative session to generate ideas to improve this project in the areas of function, quality and total life cycle cost, issue resolution and sustainable design within the award amount. It is often helpful to request User comments in writing so they may be considered, responded to, and presented at subsequent presentations.

(4) Create a new concept design from the one that is chosen. Design concepts shall include drawings, sketches, and other graphics as necessary to fully describe the concept. Prepare at least 20 copies for distribution at all presentations.

(5) The final concept shall include the following:

(a) Site Plan: Show the layout of the proposed facility in relation to major landmarks. Show all buildings, access roads, parking, pedestrian walkways, roads, sidewalks, landscaping, and major utilities. Indicate major dimensions and orientation. Provide a building code analysis, relating the proposed building site, size, and construction type to maximum allowable limits of the International Building Code.

(b) Building Floor Plans: Provide floor plans depicting functional utilization of spaces and furniture and equipment layout. Show room sizes or dimensions. Provide a Life Safety Code® analysis with the floor plan to identify required life safety and egress features.

(c) Perspective Sketches: Provide at least one sketch to show a perspective of major buildings. The sketch should not be elaborate but must show the proposed form and massing, colors to be used, and an indication of materials used.

(d) Mechanical Plans: Provide plans as necessary to show the essential work and intent of the design. Suggestions include equipment layouts, zones, etc.

(e) Electrical Plans: Provide plans as necessary to show the essential work and intent of the design. Suggestions include special light fixture types, locations, switching, power outlets and panelboard location. Provide electrical distribution single line diagram.

(f) Cost Estimate: Provide a CDW Cost Estimate and statement that the concept presented can be constructed within the award amount.

(g) Basis of Design: Describe the intent of the design by discipline. Address material quality, energy efficiency and life cycle costs.

(h) Sustainable Design: Demonstrate ability to achieve identified LEED certification goals.

(i) System Safety Engineering

(7) Prepare 20 copies of the final concept (drawings, basis of design and statement that the concept is within the award amount) for distribution at the final presentation.

(8) Dependent upon the project, the Concept Design Workshop Report is provided by the Facilitator, includes all items included in the final concept design and the following:

(a) Endorsements: Include a copy of the signature/endorsement sheet.

(b) Comments: Include comments and resolutions concerning the final concept design.

(c) Executive Summary: Summarize the workshop, including how the various concepts differed and were improved during the workshop.

(d) Special Design Features: Identify and describe unique project needs and features, e.g., pile foundations, physical security, intrusion detection systems, access control, construction in humid climates, pollution abatement, tempest, HEMP, etc.

(e) Architectural Compatibility Statement: Identify architectural style, materials, and color scheme; and indicate their compatibility with installation planning and design concepts established in the Base Exterior Architectural Plan.

(f) Environmental Summary: Provide a summary of environmental issues, listing completed actions and items requiring further

coordination, waivers or permits.

(g) Supporting Project Documentation: Include data to support the development of the concept design, layout, and special features. Items should include: project scope discussion, minutes of meetings, function analysis work sheets, and economic and technical analyses if alternatives evaluated.

(9) Except for final comments, responses and endorsements, the final report should be completed (electronically) on site, before the final presentation. If requested by the NAVFAC Project Manager, be prepared to present up to 10 hard copies of the report at the conclusion of the workshop.

(10) Conduct a "front-to-back" comprehensive presentation of the final concept. Obtain user signatures on a conceptual design endorsement sheet, signifying approval of the concept design, subject to the final comments and their resolutions agreed to at the final presentation meeting.

1.3.6.3 Concept Design Workshop Report

Within 14 calendar days of completion of the on-site Concept Design Workshop, the Design Team shall submit to the NAVFAC Project Manager an electronic copy of the Concept Design Workshop Report as one file in .PDF format.

1.3.6.4 CDW Meeting Attendees

The following Contractor key personnel shall attend the CDW: Project Manager, Project Scheduler, Cost Estimator, Lead Designer of Record, Design Staff representing each architectural/engineering discipline and Major Subcontractors when facility design is discussed, Superintendent, QC Manager, and DQC.

1.3.7 Partnering

To most effectively accomplish this contract, the Government requires the formation of a cohesive partnership within the Project Team whose members are from the Government, Contractor and its Subcontractors. Key Personnel from the Supported Command, End User (who will occupy the facility), NAVFAC (Echelon III and/or IV), Navy Region/Installation, Contractor and Subcontractors and the Designer of Record will be invited to participate in the Partnering process. The Partnership will draw on the strength of each organization in an effort to achieve a project without any safety mishaps, conforming to the Contract, within budget and on schedule.

Information on the Partnering Process and a list of Key and Optional personnel who should attend the Partnering meeting are available from the Contracting Officer.

FORMAL PARTNERING: The Contractor shall host the Partnering sessions with Key personnel of the Project Team, including Contractor's personnel and Government personnel. The Contractor shall pay all costs associated with the Partnering effort including the Facilitator, meeting room and other incidental items.

Before a Partnering session, the contractor shall coordinate with the Facilitator all requirements for incidental items (audio-visual equipment,

easels, flipchart paper, colored markers, note paper, pens/pencils, colored flash cards, etc.) and have these items available at the Partnering session. The contractor will copy documents for distribution to all attendees. The participants shall bear their own costs for meals, lodging and transportation associated with Partnering.

The Facilitator shall be experienced in conducting Partnering Workshops and acceptable to both the Government and Contractor. The Facilitator is responsible for leading the team in a timely manner and making sure that issues are identified and resolved. A list of Partnering Facilitators is available from the Contracting Officer.

a. The Initial Partnering Session shall be a duration of one day minimum. It shall be located at a place off the construction site as agreed to by the Contracting Officer and the Contractor. It may take place concurrently with the Pre Construction Meeting.

b. The Follow-on Partnering Session(s) generally lasts a half day or less. They will be scheduled at 3 to six month intervals or when needed. Participants are encouraged to utilize electronic means to expedite meetings. Meetings may be held at a location off Base, at the project site, or in a Government Facility on Base. Follow-on meetings may be held concurrently with other scheduled meetings. Attendees need only be those required to resolve current issues. The same Facilitator used in the Initial Partnering session is recommended to achieve best results and for continuity.

1.3.8 Performance Assessment Plan (PAP)

The Performance Assessment Plan (PAP) shall be used to document design innovation and budget management, provide performance feedback to the Contractor, and as a basis for interim and final evaluations in the Construction Contractor Appraisal System (CCASS) on-line database.

It is the intent of the Government to establish the PAP based on tangible, measurable indicators of outstanding contractor performance, and on commitments made in the Contractor's proposal. The initial PAP may be found on the NAVFAC Design-Build Request for Proposal Website in RFP PART 6 Attachments. Review and finalize the initial PAP during the Partnering Session. During the initial Partnering Session, the Government, the Contractor, the Designer-of-Record, and the Client will establish the PAP. Following the establishment of the PAP, the Contractor will present it, with his input, for update and discussion at projects meetings which discuss project performance. Submit an updated PAP on a monthly basis with the invoice for that period as a minimum.

1.3.9 Project Schedule

Provide in accordance with Section 01 32 17.05 20 NETWORK ANALYSIS SCHEDULES (NAS) FOR DESIGN-BUILD.

1.4 DESIGN QUALITY ASSURANCE MEETINGS

After Government Quality Assurance (QA) of each Design Submittal has been completed, meet with the Government for a one-day conference to discuss review comments for the specific design submittal.

Provide consolidated copies of all Government comments with annotations of

Contractor's action beside them. Notify the Contracting Officer in writing within five (5) days after receipt of Government's comments if the Contractor disagrees with comments technically or interprets comments to exceed the requirements of the contract.

1.4.1 Design QA Meeting Attendees

The following Contractor key personnel shall attend the design QA meetings: Project Manager, QC Manager, Commissioning Authority, and Contractor's Design Staff (architect and engineering disciplines related to topics to be discussed).

1.4.2 Design QA Meeting Location

Meetings shall be located at the office of the Contracting Officer's QA Team or may be conducted at other locations or by other electronic means if mutually acceptable to all parties.

1.4.3 Minimum Design QA Meeting Agenda

Address all Government comments that are unresolved and present clarification or supporting information requested by the Contracting Officer's QA team during the previous meeting.

1.5 PRECONSTRUCTION MEETING

Meet with the Contracting Officer to discuss construction items of concern to the Government and the Contractor such as outages, storage, trailer location, disposal of construction debris, and safety, at a location to be determined by the Contracting Officer. The Preconstruction meeting may take place with the PAK meeting or at any time prior to mobilization and before any construction work begins.

1.6 RECURRING MEETINGS

1.6.1 Quality Control and Production Meetings

Quality Control and Production Meetings in accordance with Section 01 45 00.05 20 DESIGN AND CONSTRUCTION QUALITY CONTROL.

1.6.2 Safety Meetings

Safety Meetings in accordance with Section 01 35 26.05 20 GOVERNMENT SAFTETY REQUIREMENTS FOR DESIGN-BUILD.

1.6.3 eOMSI Meetings

Refer to Section 01 78 24.00 20 FACILITY ELECTRONIC OPERATIONS AND MAINTENANCE INFORMATION for requirements.

1.7 FACILITY TURNOVER PLANNING MEETINGS

Key personnel will meet to identify strategies to ensure the project is carried to expeditious closure and turnover to the Client. Start the turnover process at the PAK Meeting and convene the Facility Turnover Meetings once the project has reached approximately 75% completion or three to six months prior to Beneficial Occupancy Date (BOD), whichever comes first. The Contracting Officer's Representative will lead the meetings and guide the discussions based on an agenda provided by the Government. The

Facility Turnover effort shall include the following:

a. PAK Meeting -

1. Contracting Officer's Technical Representative (COTR) will provide the NRZ Checklist and the Contractor, Client, and NAVFAC Representatives will compare Contractor's schedule to NRZ Checklist to ensure all Contractor Checklist Items are included in the schedule and to discuss the scheduling impact of Client and NAVFAC Checklist Items.

2. Discuss the requirements of creating the Draft and finalizing the Interim DD Form 1354 to provide asset management records to the Government. Refer to Section 01 33 10.05 20 DESIGN SUBMITTAL REQUIREMENTS for requirements.

b. Facility Turnover Meetings -

1. Fill in the NRZ Checklist including Contractor, Client,and NAVFAC Checklist Items and assigned a person responsible for each item and a due date. The Contracting Officer's Representative will facilitate the assignment of responsibilities and fill out the NRZ Checklist.

2. Review the Contractor's updated schedule. The Contractor shall develop a POAM for the completion of all Contractor, Client, and NAVFAC Checklist items.

3. Confirm that all NRZ Checklist items will be completed on time for the scheduled Facility Turnover.

4. The Contractor shall lead a discussion of the Final eOMSI submittal. Assign responsibility and schedule for the provision of all information necessary to complete the eOMSI Spreadsheet Workbook for facility turnover.

5. Schedule and coordinate the facility training of Government maintenance personnel.

1.7.1 Facility Turnover Meeting Attendees

The following key personnel shall attend the Facility Turnover Meetings: Contractor QC Manager, Design Quality Control Manager, Superintendent, Major Subcontractors, Designer-of-Record, Contracting Officer's Representative, Project Sponsor, Representative(s) of NAVFAC, the Facility Owner/ Real Property Accounting Officer, Public Works Facility Maintenance Specialist, and the Client.

PART 2 PRODUCTS

Not Used.

PART 3 EXECUTION

Not Used.

-- End of Section --

THIS PAGE HAS BEEN INTENTIONALLY LEFT BLANK

SECTION 01 32 16.05 20

DESIGN AND CONSTRUCTION PROGRESS DOCUMENTATION
7/09

PART 1 GENERAL

1.1 SUBMITTALS

Government approval is required for submittals with a "G" designation; submittals not having a "G" designation are for Contractor Quality Control approval. The following shall be submitted in accordance with Section 01 33 00.05 20 CONSTRUCTION SUBMITTAL PROCEDURES and Section 01 33 10.05 20 DESIGN SUBMITTAL PROCEDURES, except as modified in this contract.

SD-01 Preconstruction Submittals

Design and Construction Schedule; G

1.2 ACCEPTANCE

Prior to the start of work, prepare and submit to the Contracting Officer for acceptance a design and construction schedule in the form of a Network Analysis Schedule (NAS) in accordance with the terms in Contract Clause "FAR 52.236-15, Schedules for Construction Contracts," except as modified in this contract. Acceptance of an error free Baseline Schedule and updates is a condition precedent to processing the Contractor's pay request.

1.3 SCHEDULE FORMAT

1.3.1 Network Analysis Schedule (NAS)

The Contractor shall use the critical path method (CPM) to schedule and control project activities. Project schedules shall be prepared and maintained using Primavera P6, Primavera SureTrak or current mandated scheduling program. Save files in Concentric P6 or current mandated scheduling program file format, compatible with the Governments version of the scheduling program. Importing data into P6/SureTrak/current mandated scheduling program using data conversion techniques or third party software will be cause for rejection of the submitted schedule. The schedule shall be built as follows:

The Project Schedule shall show design periods, submittals, government review periods, material/equipment delivery, utility outages, all on-site construction, inspection, testing, and closeout activities. Government and Contractor on-site work activities shall be driven by calendars that reflect Saturdays, Sundays and all Federal Holidays as non-work days.

With the exception of the Contract Award, Start Contract and End Contract milestone activities, no activities shall be open-ended; each activity shall have predecessor and successor ties.

Date/time constraint(s) and/or lags, other than those required by the contract, shall not be allowed unless accepted by the Contracting Officer. The Contractor shall include as the last activity in the contract schedule, a milestone activity named "Contract Completion Date". The "Contract

Completion Date" milestone shall have a "Mandatory Finish" constraint equal to the contract completion date.

Each activity shall be assigned its appropriate Responsibility Code indicating responsibility to accomplish the work indicated by the activity, Phase Code and Work Location Code.

1.3.1.1 NAS Submittals and Procedures

Submit all network analysis and updates in hard copy and on electronic media that is acceptable to the Contracting Officer. Submit an electronic back-up of the project schedule in an import format compatible with the governments scheduling program.

1.4 UPDATED SCHEDULES

Update the Design and Construction schedule at monthly intervals or when the schedule has been revised. The updated schedule shall be kept current, reflecting actual activity progress and plan for completing the remaining work. Submit copies of purchase orders and confirmation of delivery dates as directed.

1.5 THREE-WEEK LOOK AHEAD SCHEDULE

The Contractor shall prepare and issue a 3-Week Look Ahead schedule to provide a more detailed day-to-day plan of upcoming work identified on the Design and Construction Schedule. The work plans shall be keyed to activity numbers when a NAS is required and updated each week to show the planned work for the current and following two-week period. Additionally, include upcoming outages, closures, preparatory meetings, and initial meetings. Identify critical path activities on the Three-Week Look Ahead Schedule. The detail work plans are to be bar chart type schedules, maintained separately from the Design and Construction Schedule on an electronic spreadsheet program and printed on 8-½ by 11 sheets as directed by the Contracting Officer. Activities shall not exceed 5 working days in duration and have sufficient level of detail to assign crews, tools and equipment required to complete the work. Three hard copies and one electronic file of the 3-Week Look Ahead Schedule shall be delivered to the Contracting Officer no later than 8 a.m. each Monday and reviewed during the weekly CQC Coordination Meeting.

1.6 CORRESPONDENCE AND TEST REPORTS

All correspondence (e.g., letters, Requests for Information (RFIs), e-mails, meeting minute items, Production and QC Daily Reports, material delivery tickets, photographs, etc.) shall reference Schedule activities that are being addressed. All test reports (e.g., concrete, soil compaction, weld, pressure, etc.) shall reference schedule activities that are being addressed.

PART 2 PRODUCTS

Not used.

PART 3 EXECUTION

Not used.

-- End of Section --

THIS PAGE HAS BEEN INTENTIONALLY LEFT BLANK

SECTION 01 32 17.05 20

NETWORK ANALYSIS SCHEDULES (NAS) FOR DESIGN-BUILD
8/10

PART 1 GENERAL

1.1 DESCRIPTION

The Contractor is responsible for scheduling all design, procurement and construction. A single schedule shall logically incorporate all design and construction for the entire project. Unless otherwise indicated, the contractor may begin construction when design is signed, stamped and submitted to the Government via the Contractor's quality control organization.

If Government approval is required for any portion of a final signed and sealed design package prior to construction, that review time shall be included in the schedule. The schedule shall also include times for procurement, Contractor quality control and construction, acceptance testing and training. Refer to Specification Section 01 33 00.05 20 Construction Submittal Procedures to determine if any items require Government approval prior to construction; if any are required, that submittal review time shall be included in the schedule.

The schedule is a tool to manage the project, both for Contractor and Government activities. It will also be used to measure progress and to evaluate time extensions. If cost-loaded, it will provide the basis for progress payments.

The Contractor shall use the Critical Path Method (CPM) and the Precedence Diagram Method (PDM) to satisfy time and cost applications. For consistency, when scheduling software terminology is used in this specification, the terms in Primavera's scheduling programs are used.

1.2 SUBMITTALS

The use of a "G" following a submittal indicates that a Government approval action is required. Submit the following in accordance with Section 01 33 10.05 20 DESIGN SUBMITTAL PROCEDURES and Section 01 33 00.05 20 CONSTRUCTION SUBMITTAL PROCEDURES, except as modified in this contract.

SD-01 Preconstruction Submittals

Qualifications; G

Design Baseline Network Analysis Schedule (NAS) Package; G

Construction Baseline Network Analysis Schedule Package; G

SD-07 Certificates

Monthly Network Analysis Schedule Updates; G

SD-11 Closeout Submittals

As-Built Schedule; G

1.3 SCHEDULE ACCEPTANCE PRIOR TO START OF WORK

Government review comments on the Contractor's schedule(s) shall not relieve the Contractor from compliance with requirements of the Contract Documents.

The Design Baseline Network Analysis Schedule (NAS) Package shall be submitted and presented to the Government at the PAK Meeting. The acceptance of a Design Baseline NAS is a condition precedent to processing Contractor's pay request(s) for design activities/items of work.

Only bonds shall be paid prior to acceptance of the Design Baseline Network Analysis Schedule(NAS).

The most current updated design schedule shall accompany each design submittal.

The Contracting Officer and Contractor shall participate in a preliminary meeting(s) to discuss the proposed schedule and requirements of this section prior to the Contractor preparing the Construction Baseline Network Analysis Schedule Package.

The acceptance of a Construction Baseline NAS is a condition precedent to:

1. The Contractor starting work on the demolition or construction stage(s) of the contract.

2. Processing Contractor's pay request(s) for construction activities/items of work.

3. Review of any schedule updates

Submittal of the Baseline Network Analysis Schedules, and subsequent schedule updates, shall be understood to be the Contractor's certification that the submitted schedule meets all of the requirements of the Contract Documents, represents the Contractor's plan on how the work shall be accomplished, and accurately reflects the work that has been accomplished and how it was sequenced (as-built logic).

1.4 SOFTWARE

Project schedules must be prepared and maintained using Primavera P6 or current mandated scheduling program. Save files in PDF and Concentric P6 or current mandated scheduling program file format, compatible with the Governments version of the scheduling program. Importing data into P6 /current mandated scheduling program using data conversion techniques or third party software will be cause for rejection of the submitted schedule.

1.5 QUALIFICATIONS

The designated Scheduler for the project shall have prepared and maintained at least 3 previous schedules of similar size and complexity of this contract using Primavera P6 or current mandated scheduling program. A resume outlining the qualifications of the Scheduler shall be submitted for acceptance to the Contracting Officer. Payment will not be processed until an acceptable Scheduler is provided.

1.6 NETWORK SYSTEM FORMAT

The system shall include time scaled logic diagrams and specified reports.

1.6.1 Diagrams

Provide Time-scaled Logic Diagram printed in color on ANSI D size sheets. The diagram shall clearly show activities on the critical path. Include the following information for each activity:

a. Activity ID

b. Activity Description

c. Original Duration in Work Days

d. Remaining duration

e. Percent Complete

f. Early Start Date

g. Early Finish Date

h. Total Float

1.6.2 Schedule Activity Properties and Level of Detail

The NAS shall identify all Design, Government, Construction Quality Management (CQM), Construction activities planned for the project and all other activities that could impact project completion if delayed. Separate activities shall be created for each Phase, Area, Floor Level and Location the activity is occurring. Activity categories included in the schedule are specified below.

With the exception of the Contract Award and Contract Completion Date (CCD) milestone activities, no activity shall be open-ended; each activity shall have predecessor and successor ties. Once an activity exists on the schedule it may not be deleted or renamed to change the scope of the activity and shall not be removed from the schedule logic without approval from the Contracting Officer. The ID number for a deleted activity shall not be re-used for another activity. No more than 20 percent of the activities shall be critical or near critical. Critical is defined as having zero days of Total Float. "Near Critical" is defined as having Total Float of 1 to 14 days. Contractor activities shall be driven by calendars that reflect Saturdays, Sundays and all Federal Holidays as non-work days.

1.6.2.1 Activity Categories

a. Design Activities: Design activities shall include design decision points, design submittal packages, including any critical path submittals for Fast Tracked Phases. Review times for design development packages shall be included in the schedule. Refer to Specification Section 01 33 10.05 20 Design Submittal Procedures, for specific requirements.

b. Procurement Activities: Examples of procurement activities include, but are not limited to; Material/equipment submittal preparation, submittal and approval of material/equipment; material/equipment

fabrication and delivery, and material/equipment on-site. As a minimum, separate procurement activities will be provided for critical items, long lead items, items requiring government approval and material/equipment procurement for which payment will be requested in advance of installation. The Contractor shall show each delivery with relationship tie to the Construction Activity specifically for the delivery.

c. Government Activities: Government and other agency activities that could impact progress shall be clearly identified. Government activities include, but are not limited to; Government approved submittal reviews, Government conducted inspections/tests, environmental permit approvals by State regulators, utility outages, Design Start, Construction Start, (including Design/Construction Start for each Fast-Track Phase, and delivery of Government Furnished Material/Equipment.

d. Quality Management (QM) Activities: CQM Activities shall identify the Preparatory Phase and Initial Phase for each Definable Feature of Work identified in the Contractor's Quality Control Plan. These activities shall be added to each Three-Week Look Ahead Schedule referenced in the paragraph entitled "THREE-WEEK LOOK AHEAD SCHEDULE" and will also be included in each monthly update. The Follow-up Phase will be represented by the Construction Activities in the Baseline Schedule and in the schedule updates.

e. Construction Activities: No on-site construction activity shall have a duration in excess of 20 working days. Separate construction activities shall be created for each Phase, Area, Floor Level and Location the activity is occurring. Contractor activities shall be driven by calendars that reflect Saturdays, Sundays and all Federal Holidays as non-work days, unless otherwise defined in this contract.

f. Turnover and Closeout Activities: Include a separate section with all items on the Navfac Red Zone Checklist/POAM that are applicable to this project. The checklist will be provided at the PAK meeting. As a minimum, this will include all testing, specialized inspection activities, Pre-Final inspection, Punch List Completion, Final Inspection and Acceptance. Add a milestone for the Facility Turnover Planning Meeting at approximately 75% construction contract completion or three to six months prior to BOD, whichever is sooner.

1.6.2.2 Contract Milestones and Constraints

a. Project Start Date Milestones: The Contractor shall include as the first activity on the schedule a start milestone titled "Contract Award", which shall have a Mandatory Start constraint equal to the Contract Award Date.

b. Projected Completion Milestone: The Contractor shall include an unconstrained finish milestone on the schedule titled "Projected Completion". Projected Completion is defined as the point in time the Government would consider the project complete and ready for its intended use. This milestone shall have the Contract Completion (CCD) milestone as its only successor.

c. Contract Completion Date (CCD) Milestone: The Contractor shall include as the last activity on the schedule a finish milestone titled "Contract Completion (CCD)", which shall have a Mandatory Finish

constraint equal to the current Contract Completion Date. Calculation of schedule updates shall be such that if the finish of the "Projected Completion" milestone falls after the contract completion date, then negative float will be calculated on the longest path and if the finish of the "Projected Completion" milestone falls before the contract completion date, the float calculation shall reflect positive float on the longest path. The only predecessor to the Contract Completion Date Milestone shall be the Projected Completion milestone .

1.6.2.3 Activity Code

At a minimum, the Contractor shall establish activity codes identified in this specification and 3 additional activity codes identified by the Contracting Officer. Once established, activity codes and values cannot be changed without approval by the Contracting Officer.

a. Phase: All activities shall be assigned a 4-digit code value based on the contract phase it occurs in.

b. Area Code: All activities shall be assigned an area code value identifying the Area in which the activity occurs. Activities shall not belong to more than one area. Area is defined as a distinct space, function or activity category; such as, separate structure(s), sitework, project summary, construction quality management, material/equipment procurement, etc.

c. Work Item: All activities in the project schedule shall be assigned a 4-digit Work Item code value. Examples of Work Item code values include but are not limited to water lines, drain lines, building pad and foundation, slab on grade, walls and columns, suspended slab, roof structure, roofing, exterior finish systems, interior rough-in, and finishes, etc.

d. Location 1: Assign a 4-digit Location 1 code value to activities associated with multistory structures. Code values are used to identify the floor level where an activity is occurring.

e. Location 2: Assign a 4-digit Location 2 code value to all activities to identify the location within an Area, Work Item or Building Level that an activity is occurring.

f. Responsibility Code: All activities in the project schedule shall be identified with the party responsible for completing the task. Activities shall not belong to more than one responsible party.

1.6.2.4 Anticipated Weather Delays

The Contractor shall use the National Oceanic and Atmospheric Administration's (NOAA) historical monthly averages for the NOAA location closest to the project siteas the basis for establishing a "Weather Calendar" showing the number of anticipated non-workdays for each month due to adverse weather, Saturdays, Sundays and all Federal Holidays as non-work days.

Assign the Weather Calendar to any activity that could be impacted by adverse weather. The Contracting Officer will issue a modification in accordance with the contract clauses, giving the Contractor a time extension for the difference of days between the anticipated and actual

adverse weather delay if the number of actual adverse weather delay days exceeds the number of days anticipated for the month in which the delay occurs and the adverse weather delayed activities critical to contract completion. A lost workday due to weather conditions is defined as a day in which the Contractor cannot work at least 50 percent of the day on the impacted activity.

1.6.2.5 Cost Loading

a. Cost Loading Activities: Costs for incremental design preparation shall be assigned to the respective design phase submittal milestone(s). Material and Equipment Costs for which payment will be requested in advance of installation shall be assigned to their respective procurement activity (i.e., the material/equipment on-site activity). All other construction costs shall be assigned to their respective Construction Activities. The value of inspection/testing activities shall not be less than 10 percent of the total costs for Procurement and Construction Activities. Evenly disperse overhead and profit to each activity over the duration of the project.

b. Quantities and Units of Measure: Each cost loaded activity shall have a detailed quantity breakdown and unit of measure.

1.6.3 Schedule Software Settings and Restrictions

a. Activity Constraints: Date/time constraint(s), other than those required by the contract, will not be allowed unless accepted by the Contracting Officer. Identify any constraints proposed and provide an explanation for the purpose of the constraint in the Narrative Report.

b. Default Progress Data Disallowed: Actual Start and Actual Finish dates on the CPM schedule shall match the dates on the Contractor Quality Control and Production Reports.

c. Software Settings: Schedule calculations and Out-of-Sequence progress (if applicable) shall be handled through Retained Logic, not Progress Override. All activity durations and float values will be shown in days. Activity progress will be shown using Remaining Duration. Default activity type will be set to "Task". The project "Must Finish By" date shall be left blank.

1.6.4 Required Tabular Reports

The following reports shall be included with the schedule and update submittals:

a. Log Report: Listing of all changes made between the previous schedule and current updated schedule.

b. Narrative Report: Identify and justify; 1) Progress made in each area of the project; 2) Critical Path; 3) Date/time constraint(s), other than those required by the contract 3) Changes in the following; added or deleted activities, original and remaining durations for activities that have not started, logic, milestones, planned sequence of operations, critical path, and cost loading; 4) Any decrease in previously reported activity Earned Amount; 5) Pending items and status thereof, including permits, changes orders, and time extensions; 6) Status of Contract Completion Date and interim milestones; 7) Current and anticipated delays (describe cause of

delay and corrective actions(s)); and 8) Description of current and future schedule problem areas. Each entry in the narrative report will cite the respective Activity ID and Activity Description, the date and reason for the change, and description of the change.

c. Schedule Variance Control (SVC) Diagram: With each schedule submission, provide a SVC diagram showing 1) Cash Flow S-Curves indicating planned project cost based on projected early and late activity finish dates and 2) Earned Value to-date. Revise Cash Flow S-Curves when the contract is modified, or as directed by the Contracting Officer.

1.7 SUBMISSION AND ACCEPTANCE

The Design Baseline NAS shall include detailed design activities, general (summarized) approach for the construction phase(s) of the project and required milestone activities. If the project is being Fast-Tracked or allows Early Start of construction, the Design Baseline Project Schedule shall include all fast-tracked design construction phases, etc., including the required or proposed critical path design submittals within each phase that shall occur during the duration of the project.

The Contractor shall develop the Construction Baseline Network Analysis Schedule Package as design progresses, with detailed construction activities. If design must be completed and accepted prior to construction, submit the complete design and construction network analysis schedule and obtain acceptance prior to starting construction work. If the project will be Fast-Tracked, each construction stage shall be detailed and built upon the previous Fast-Tracked Baseline Schedule (including any interim updates) and accepted prior to starting that stage of the construction work. Payment for completed work is dependent on an accepted, detailed schedule for that portion of work.

1.7.1 Monthly Network Analysis Schedule Updates

Contractor and Government representatives shall meet at monthly intervals to review and agree on the information presented in the updated project schedule. The submission of an acceptable, updated schedule to the Government is a condition precedent to the processing of the Contractor's pay request. If a Schedule of Prices is the basis for progress payments, it shall be consistent with the logic and activity breakdowns on the progress schedule. If progress payments are based on a cost-loaded schedule, the Contractor and Government shall agree on percentage of payment for each activity progressed during the update period.

Provide the following with each Schedule submittal:

a. Time Scaled Logic Diagram.

b. Reports listed in paragraph entitled "Required Tabular Reports."

c. Data disks containing the project schedule. Include the back-up native .prx/current mandated schedule program files.

1.7.2 As-Built Schedule

As a condition precedent to the release of retention and making final payment, submit an "As-Built Schedule," as the last schedule update showing all activities at 100 percent completion. This schedule shall reflect the exact manner in which the project was actually constructed.

1.8 CONTRACT MODIFICATION

Submit a Time Impact Analysis with each cost and time proposal for a proposed change. Time Impact Analysis (TIA) shall illustrate the influence of each change or delay on the Contract Completion Date or milestones. No time extensions will be granted nor delay damages paid unless a delay occurs which consumes all available Project Float, and extends the Projected Finish beyond the Contract Completion Date.

a. Each TIA shall be in both narrative and schedule form demonstrating the delay impact. The TIA shall identify the predecessors to the new activities and demonstrate the impacts to successor activities. The Contractor shall run the schedule calculations and submit the impacted schedule with the proposal or claim.

b. The TIA schedule submitted with the proposal shall show all activity progress as of the date of the proposal. If the impact to the schedule occurs prior to the proposal submission, the TIA schedule shall be updated to show all activity progress as of the time of the impact. If the proposed change does not impact the CCD, no TIA shall be required.

c. Submit Data disks containing the TIA schedule. Include the back-up native .prx/current mandated schedule program files.

d. Unless the Contracting Officer requests otherwise, only conformed contract modifications shall be added into the Project NAS.

1.9 FLOAT

Project Float is the length of time between the Contractor's Projected Finish Milestone and the Contract Completion Date Milestone. Project Float available in the schedule, at any time shall not be for the exclusive use of either the Government or the Contractor.

1.10 THREE-WEEK LOOK AHEAD SCHEDULE

The Contractor shall prepare and issue a 3-Week Look Ahead schedule to provide a more detailed day-to-day plan of upcoming work identified on the Project Network Analysis Schedule. The work plans shall be keyed to NAS activity numbers and updated each week to show the planned work for the current and following two-week period. Additionally, include upcoming outages, closures, preparatory meetings, and initial meetings. Identify critical path activities on the Three-Week Look Ahead Schedule. The detail work plans are to be bar chart type schedules, maintained separately from the Project NAS on an electronic spreadsheet program and printed on 8-½ by 11 sheets as directed by the Contracting Officer. Activities shall not exceed 5 working days in duration and have sufficient level of detail to assign crews, tools and equipment required to complete the work. Three hard copies and one electronic file of the 3-Week Look Ahead Schedule shall be delivered to the Contracting Officer no later than 8 a.m. each Monday and reviewed during the weekly CQC Coordination Meeting.

PART 2 PRODUCTS

Not used.

PART 3 EXECUTION

Not used.

-- End of Section --

THIS PAGE HAS BEEN INTENTIONALLY LEFT BLANK

SECTION 01 33 00.05 20

CONSTRUCTION SUBMITTAL PROCEDURES
02/11

PART 1 GENERAL

1.1 RELATED REQUIREMENTS

This section covers construction submittals that are not included in the design submittals. Submit design submittals in accordance with 01 33 10.05 20 DESIGN SUBMITTAL PROCEDURES. When using Unified Facility Guide Specifications (UFGS) sections that reference Section 01 33 00.05 20 CONSTRUCTION SUBMITTAL PROCEDURES, change reference to this section, Section 01 33 00.05 20 CONSTRUCTION SUBMITTAL PROCEDURES.

1.2 SUBMITTAL DESCRIPTIONS (SD)

Submittal requirements are specified in Unified Facilities Guide Specifications (UFGS) in Part 2, GENERAL REQUIREMENTS; in references in Part 4 PERFORMANCE TECHNICAL SPECIFICATIONS; and in UFGSs in Part 5, PRESCRIPTIVE SPECIFICATIONS. Submittals that are identified by SD numbers use descriptions of items included in submittal packages and titles as follow:

SD-01 Preconstruction Submittals

Certificates of insurance.
Surety bonds.
List of proposed subcontractors.
List of proposed products.
Construction Progress Schedule.
Submittal register.
Schedule of values.
Health and safety plan.
Work plan.
Quality control and Commissioning plans.
Environmental protection plan.

SD-02 Shop Drawings

Drawings, diagrams and schedules specifically prepared to illustrate some portion of the work.

Diagrams and instructions from a manufacturer or fabricator for use in producing the product and as aids to the Contractor for integrating the product or system into the project.

Drawings prepared by or for the Contractor to show how multiple systems and interdisciplinary work will be coordinated.

SD-03 Product Data

Catalog cuts, illustrations, schedules, diagrams, performance charts, instructions and brochures illustrating size, physical appearance and other characteristics of materials or equipment for some portion of the work.

Samples of warranty language when the contract requires extended product warranties.

SD-04 Samples

Physical examples of materials, equipment or workmanship that illustrate functional and aesthetic characteristics of a material or product and establish standards by which the work can be judged.

Color samples from the manufacturer's standard line (or custom color samples if specified) to be used in selecting or approving colors for the project.

Field samples and mock-ups constructed on the project site establish standards by which the ensuing work can be judged. Includes assemblies or portions of assemblies which are to be incorporated into the project and those which will be removed at conclusion of the work.

SD-05 Design Data

Calculations, mix designs, analyses or other data pertaining to a part of work.

SD-06 Test Reports

Report signed by authorized official of testing laboratory that a material, product or system identical to the material, product or system to be provided has been tested in accord with specified requirements. (Testing must have been within three years of date of contract award for the project.)

Report which includes findings of a test required to be performed by the Contractor on an actual portion of the work or prototype prepared for the project before shipment to job site.

Report which includes finding of a test made at the job site or on sample taken from the job site, on portion of work during or after installation.

Investigation reports.

Daily checklists.

Final acceptance test and operational test procedure.

SD-07 Certificates

Statements signed by responsible officials of manufacturer of product, system or material attesting that product, system or material meets specification requirements. Must be dated after award of project contract and clearly name the project.

Document required of Contractor, or of a supplier, installer or subcontractor through Contractor, the purpose of which is to further quality of orderly progression of a portion of the work by documenting procedures, acceptability of methods or personnel qualifications.

Confined space entry permits.

SD-08 Manufacturer's Instructions

Preprinted material describing installation of a product, system or material, including special notices and Material Safety Data sheets concerning impedances, hazards and safety precautions.

SD-09 Manufacturer's Field Reports

Documentation of the testing and verification actions taken by manufacturer's representative to confirm compliance with manufacturer's standards or instructions.

Factory test reports.

SD-10 Operation and Maintenance Data

Data that is furnished by the manufacturer, or the system provider, to the equipment operating and maintenance personnel. This data is needed by operating and maintenance personnel for the safe and efficient operation, maintenance and repair of the item.

SD-11 Closeout Submittals

Documentation to record compliance with technical or administrative requirements or to establish an administrative mechanism.

Special requirements necessary to properly close out a construction contract. For example, Record Drawings, As-built drawings, DD Form 1354, and Sustainable and Energy Data Record Card. Also, submittal requirements necessary to properly close out a major phase of construction on a multi-phase contract.

1.3 SUBMITTALS

The use of a "G" following a submittal indicates that an approval action is required, either by the Government or by the Contractor's Designer of Record (DOR) or QC Specialist.

Submit the following in accordance with the requirements of this section.

SD-01 Preconstruction Submittals

Submittal Register Format; G

1.3.1 Submittal Register

The submittal register will be prepared during the initial design stages of the project and indicate each design and construction submittal. Maintain an electronic version of the submittal register as work progresses. The DOR must assist the DQC in preparing the submittal register by determining all project submittals that require DOR approval. The Contractor proposed submittal register format must include all types of information pertinent to the submittal process and be approved by the Contracting Officer prior to the first submission.

1.4 CONSTRUCTION QUALITY CONTROL

1.4.1 Contractor Reviewing, Certifying, Approving Authority

The QC organization is responsible for reviewing and certifying that submittals are in compliance with the contract requirements.

In RFP PART 4 PERFORMANCE TECHNICAL SPECIFICATIONS (PTS), there are UFGS specification sections required to be submitted as part of the design submittal. Unless specified otherwise in this section, the Contractor's DOR is the approving authority for submittals listed in these UFGS specifications with a "G" designation, unless the DOR delegates to Contractor Quality Control approval. RFP Part 4 PTS sections also include submittals identified for DOR approval that are not denoted with a "G" designation, these submittals cannot be delegated for Contractor Quality Control approval.

If RFP PART 5 PRESCRIPTIVE SPECIFICATIONS are utilized in this RFP, the Contractor's DOR is the approving authority for submittals listed with a "G" designation, unless the DOR delegates to Contractor Quality Control approval.

DOR shall approve construction submittals that are incorporated in the design submittal prior to being submitted to the Government for design submittal approval. Indicate approval of these construction submittals on the accompanying submittal transmittal forms and the submittal register for each design submittal package. In addition, the DOR professional stamp on the final design submittal indicates approval of construction submittals combined with the design submittal.

Submittal items identified in RFP PARTS 2, 4, and 5 that are not identified with a "G" designation or not designated for DOR approval (in RFP Part 4) are for Contractor Quality Control approval.

Construction submittals that are approved by the DOR or certified by the QC are not required to be submitted to the Government for surveillance, except when the RFP requires the design and construction submittals to be combined in UFGS section 01 33 10.05 20, Design Submittal Procedures or where specified in paragraph SUBMITTALS RESERVED FOR GOVERNMENT SURVEILLANCE of this section.

1.4.2 Submittals Reserved for Government Approval

The Government is the approving authority for submittals with a "G" designation in RFP Part 2 GENERAL REQUIREMENTS specification sections. Comply with additional Government approval requirements for Environmental submittals, as specified in RFP Part 2, Section 01 57 19.05 20 TEMPORARY ENVIRONMENTAL CONTROLS FOR DESIGN-BUILD.

1.4.2.1 Scheduling for Government Approved Submittals

Except as specified otherwise, allow review period, beginning when Government receives submittal from the QC organization, of 20 working days for return of submittal to the Contractor. Period of review for submittals with Contracting Officer approval begins when Government receives submittal from QC organization. Period of review for each resubmittal is the same as for initial submittal.

1.4.3 Submittals Reserved for Government Surveillance

Surveillance submittals are approved by the Contractor in accordance with paragraph CONTRACTOR REVIEWING, CERTIFYING, AND APPROVING AUTHORITY, but provide the Government the opportunity to oversee critical project issues.

If during the Government surveillance of construction submittals, items are brought to the Contractor's attention as non-compliant, the Contractor shall correct the submittal and construction to comply with the requirements of the RFP. Stamp surveillance submittals "APPROVED" by the DOR or QC Specialist and "FOR SURVEILLANCE ONLY." Submit the following Government surveillance submittals, prior to starting work for construction submittal items, and after the completion of the work for reports submittals items.

a. Submit fire protection related submittals pertaining to spray-applied fire proofing and fire stopping, exterior fire alarm reporting systems, interior fire alarm & detection systems, and fire suppression systems including fire pumps and standpipe systems.

b. Submit geotechnical related submittals pertaining to the soils investigations (reports and soils analysis), foundations (shallow and deep), pavements structure design, test pile and production pile testing and installation.

c. Submit conveying related submittals pertaining to elevators, escalators, weight handling equipment, lifts, and conveyors.

d. Submit roofing submittals pertaining to materials and systems used to make up the roof system.

e. Submit HVAC Testing, Adjusting, and Balancing required submittals.

f. Submit telecommunications shop drawings, as described in Part 4, D50 ELECTRICAL, for coordination with the NMCI Contractor.

g. Submit Performance Verification and Acceptance Testing submittals listed in the PTS and referenced UFGS.

h. Submit all Interim Special Inspection Reports on a bi-weekly basis until work requiring special inspections is complete. Submit all Structural Observation Reports and the Final Report of Special Inspections.

i. Submit Final LEED Certification Documentation for US Green Building Council Certification.

j. Submit building envelope testing results for air tightness and the Infrared Thermography results if air barrier deficiencies are identified. Actions taken to correct building envelope deficiencies at each location.

1.4.4 Constraints

a. Submittals shall be complete for each definable feature of work; submit components of definable feature interrelated as a system at the same time.

b. Approval of a separate material, product, or component does not imply approval of assembly in which item functions.

1.4.5 Design Change and Variation

The Contractor must limit change and variation to items that will be advantageous to the Government. Submit proof that the change or variation is needed and provide the same or better level of quality as the design that the Government originally reviewed or approved. Design change is considered prior to Government approval of the final design and variation is considered after Government approval of final design. Documentation provided to the Government shall include coordination measures proposed to incorporate the design change or variation into the construction.

1.4.5.1 Design Change

Design change must meet the minimum requirements of the solicitation and the accepted proposal. Change from what was reviewed by the Government during design must be approved by the Designer of Record and brought to the attention of the Government before the design change is incorporated into the design documents.

1.4.5.2 Variations

Variations from contract requirements including the solicitation, the accepted proposal, and the final design, requires Government approval. Variations to the contract requirements must be approved by the Designer of Record prior to resubmitting the design to the Government for approval of the variation.

1.4.6 Contractor's Responsibilities

Ensure no work has begun until submittals for that work have been "approved" or "approved as noted."

1.4.7 QC Organization Responsibilities

Stamp each sheet of each submittal with QC certifying statement or approving statement, except that data submitted in bound volume or on one sheet printed on two sides may be stamped on the front of the first sheet only.

a. When approving authority is Contracting Officer, QC organization will certify submittals, assure proper signatures, and forward to Contracting Officer with the following certifying statement:

"I hereby certify that the (equipment) (material) (article) shown and marked in this submittal is that proposed to be incorporated with contract Number (insert contract number here), is in compliance with the contract documents, can be installed in the allocated spaces, and is submitted for Government approval.

RFP Part Two Submittals:

Certified by QC Manager _____, Date _____
(QC Manager)

RFP Part Four and Part Five Submittals:

Certified by DOR _____, Date _____

Certified by QC Manager _____, Date _____"

(1) Sign certifying statement or approval statement. The person signing certifying statements shall be QC organization member designated in the approved QC plan. The signatures shall be in original ink. Stamped signatures are not acceptable.

(2) Update submittal register database as submittal actions occur and maintain the submittal register at project site until final acceptance of all work by Contracting Officer.

(3) Retain a copy of approved submittals at project site, including Contractor's copy of approved samples.

b. When the Approving Authority is the Designer of Record, the DOR shall approve, professionally stamp, sign, and date submittals. DOR stamp on construction submittals or submission of design documents that include construction submittals indicates DOR approval for construction. QC organization will certify submittals, assure proper signatures, and forward to Contracting Officer with the following certifying statement:

"I hereby certify that the (equipment) (material) (article) shown and marked in this submittal is that proposed to be incorporated with contract Number (insert contract number here), is in compliance with the contract requirements, can be installed in the allocated spaces, and is submitted for DOR approval.

RFP Part Four and Part Five Submittals:

Approved by DOR _____, Date _____

Certified by QC Manager _____, Date _____"

(1) Sign certifying statement or approval statement. The person signing certifying statements shall be QC organization member designated in the approved QC plan. The signatures shall be in original ink. Stamped signatures are not acceptable.

(2) Update submittal register database as submittal actions occur and maintain the submittal register at project site until final acceptance of all work by Contracting Officer.

(3) Send copies of final DOR or QC Specialist approved and signed submittals that are identified in this section for Government surveillance to the Contracting Officer. Stamp copies "For Surveillance Only."

1.4.8 Government's Responsibilities

When approving authority is the Contracting Officer, the Government will:

a. Note date on which submittal was received from QC Manager, on each submittal.

b. Review submittals for compliance with contract documents.

1.4.8.1 Government Actions

Submittals will be returned with one of the following notations:

a. Submittals marked "approved" or "approved as submitted" authorize Contractor to proceed with work covered.

b. A submittal marked "not reviewed" will be returned with an explanation of the reason it was not reviewed.

c. Submittals marked "approved as noted" or "approval except as noted; resubmission not required" authorize Contractor to proceed with work as noted provided Contractor takes no exception to the notations.

d. Submittals marked "revise and resubmit" or "disapproved" indicate submittal is incomplete or does not comply with design concept or requirements of the contract documents and shall be resubmitted with appropriate changes. No work shall proceed for this item until resubmittal is approved.

e. Submittals required for surveillance will be returned only if corrective actions are required.

1.5 FORMAT OF SUBMITTALS

1.5.1 Transmittal Form

Transmit submittals with transmittal form prescribed by Contracting Officer and standard for the project.

1.5.1.1 Combined Design and Construction Submittal Notification

Indicate on the design submissions transmittal form, which construction submittals have been combined with the design documents. Coordinate transmittal form list of combined design and construction submittals with submittal register to indicate DOR approval of all combined submittals.

1.6 QUANTITY OF SUBMITTALS

1.6.1 Quantity of Submittals Reserved for Government Approval

Submit six copies of submittals of shop drawings requiring review and approval by Contracting Officer.

1.6.2 Quantity of Submittals Reserved for Government Surveillance

Submit six copies of submittals specified for surveillance to the Contracting Officer. Submit two additional copies of elevator submittals directly to the NAVFAC Elevator Specialist responsible for the NAVFAC elevator certification of the project.

PART 2 PRODUCTS

Not used.

PART 3 EXECUTION

Not used.

-- End of Section --

THIS PAGE HAS BEEN INTENTIONALLY LEFT BLANK

SECTION 01 33 10.05 20

DESIGN SUBMITTAL PROCEDURES
07/13

PART 1 GENERAL

1.1 SUMMARY

This section includes requirements for Contractor-originated design documents and design submittals.

1.2 REFERENCES

The publications listed below form a part of this specification to the extent referenced. The publications are referred to within the text by the basic designation only. The latest version of the publication at time of award shall be used.

U. S. GREEN BUILDING COUNCIL

LEED GBDC
(2009) LEED Reference Guide for Green Building Design and Construction

LEED NC
(2009) Leadership in Energy and Environmental Design(tm) New Construction Rating System

U.S. DEPARTMENT OF DEFENSE (DOD) UNIFIED FACILITIES CRITERIA (UFC)

UFC 1-200-01
General Building Requirements

UFC 1-200-02
High Performance and Sustainable Building Requirements

UFC 1-300-09N
Design Procedures

UFC 3-600-10N
Fire Protection Engineering

UFC 3-800-10N
Environmental Engineering for Facility Construction

1.2.1 Reference Requirements

1.2.1.1 UFC 1-200-01

UFC 1-200-01, General Building Requirements is a hub document that provides general building requirements and references other critical UFCs. A reference to UFC 1-200-01 in the RFP document requires compliance with the

Tri-Service Core UFCs. Refer to the UFC 1-200-01 for a complete list of all applicable Tri-Service Core UFCs at website location http://www.wbdg.org/ccb/browse_cat.php?o=29&c=4.

1.2.1.2 UFC 1-200-02

UFC 1-200-01 requires compliance with UFC 1-200-02, High Performance and Sustainable Building Requirements. UFC 1-200-02 replace and cancel UFC 4-030-01, Sustainable Development and UFC 3-400-01, Energy Conservation.

1.2.1.3 UFC 3-600-10N and UFC 3-800-10N

UFC 3-600-10N and UFC 3-800-10N are only available on the NAVFAC Design-Build Website under the Design Guidance link. These Draft UFCs are applicable as Final documents for Navy projects.

1.3 GENERAL DESIGN REQUIREMENTS

Contractor-originated design documents shall provide a project design that complies with the Request For Proposal (RFP), UFC 1-300-09N, UFC 1-200-01, the Core UFCs, and other UFC's listed above.

1.4 SUBMITTALS

Submit design submittals, including shop drawings used as design drawings, to the Government for approval. The use of a "G" following a submittal indicates that a Government approval action is required. Submit the following in accordance with this section and Section 01 33 00.05 20 CONSTRUCTION SUBMITTAL PROCEDURES.

SD-01 Preconstruction Submittals

Consolidated RFP Documents; G

Submittal Register; G

SD-04 Samples

Final framed rendering and copies; G

SD-05 Design Data

Design Drawings; G

Specifications; G

Design Analysis; G

Design Submittals; G

Sustainable Design; G

Project Rendering; G

Facility Recognition Plaque; G

Historic Preservation and Planning Commission Submission; G

SD-07 Certificates

LEED Green Building Rating System (GBRS); G

LEED Certification Registration Application; G

LEED Certification; G

SD-11 Closeout Submittals

Record Documents; G

NAVFAC Sustainable and Energy Data Record Card; G

DD Form 1354; G

1.5 DESIGN QUALITY CONTROL

1.5.1 Contractor Reviewing and Certifying Authority

The QC organization is responsible for reviewing and certifying that design submittals are in compliance with the contract requirements.

1.5.2 Government Approving Authority

The Contracting Officer is the approving authority for design submittals.

1.5.3 Designer of Record Certifying Authority

The Designer of Record (DOR), as registered and defined in UFC 1-300-09N, is the design certifying authority. The DOR accepts responsibility for design of work in each respective design discipline, by stamping and approving final construction drawings submitted to the Government approval authority.

1.5.4 Contractor Construction Actions

Upon submission of sealed and signed design documents certified by the DOR, Design Quality Control (DQC) Manager and the Quality Control (QC) Managers, the Contractor may proceed with material and equipment purchases, fabrication and construction of any elements covered by that submittal, except as specified in the following paragraph.

1.5.4.1 Exception to Contractor Construction Actions

The Government will approve the following final submittals before the Contractor shall be allowed to proceed with construction:

a. Any design submittal that includes or will be impacted by a design change to the contract. Final Government approval of the design change is required before construction can begin on the work included in that design submittal.

1.5.5 Contractor's Responsibilities

a. Designate a lead licensed architect or engineer to be in responsible charge to coordinate the design effort of the entire project. This lead architect or engineer shall coordinate all design segments of the

project to assure consistency of design between design disciplines.

b. With the Designer or Record, verify site information provided in the RFP. In addition, provide additional field investigations and verification of existing site conditions as may be required to support the development of design and construction of the project.

c. Indicate on the transmittal form accompanying submittal which design submittals are being submitted as shop drawings.

d. Advise Contracting Officer of variations, as required by paragraph "Variations."

e. Provide an updated, cumulative submittal register with each design package that identifies the design and construction submittals required by that design package and previous submittals.

1.5.6 QC Organization Responsibilities

a. Both the CA and the QC Manager must certify design submittals for compliance with the contract documents. The DOR stamp on drawings indicates approval from the DOR.

b. QC organization shall certify submittals forwarded by the Designer of Record (DOR) to the Contracting Officer with the following certifying statement:

"I hereby certify that the (equipment) (material) (article) shown and marked in this submittal is that proposed to be incorporated with Contract Number (insert contract number here), is in compliance with the contract documents, and is submitted for Government approval.

Certified by Design Quality Control (DQC) Manager
_____,
Date _____

Certified by QC Manager_____,
Date _____"

c. Sign certifying statement. The persons signing certifying statements shall be the QC organization members designated in the approved QC plan. The signatures shall be in original ink. Stamped signatures are not acceptable.

d. Update submittal register as submittal actions occur and maintain the submittal register at project site until final approval of all work by Contracting Officer.

e. Retain a copy of approved submittals at project site.

1.5.7 Government Responsibilities

The Government will

a. Note date on which submittal was received from QC manager, on each submittal.

b. Perform a quality assurance (QA) review of submittals. Government will notify Contractor when comments for that design package are posted and

ready for Contractor evaluation and resolution.

c. Upon submittal of final design package and resolution of comments by the Contractor, the Government will sign final design package, when approved, and return electronic copy of signed design documents to the Contractor.

1.5.7.1 Actions Possible

Submittals will be returned with one of the following notations:

a. Submittals may be marked "approved."

b. Submittals marked "not reviewed" will indicate submittal has been previously reviewed and approved, is not required, does not have evidence of being reviewed and certified by Contractor, or is not complete. Submittal will be returned with an explanation of the reason it is not reviewed. Resubmit submittals returned for lack of review by Contractor or for being incomplete, with appropriate action, coordination, or change.

c. Submittals marked "revise and resubmit" or "disapproved" indicate submittal is incomplete or does not comply with design concept or requirements of the contract documents and shall be resubmitted with appropriate changes. If work has been started on the unacceptable portion of the design submittal, the Contractor shall propose corrective action. No further work shall proceed until the issue is resolved in a manner satisfactory to the Government.

1.6 DESIGN DOCUMENTS

Provide design documents that include design analysis, design drawings, and design specifications, reports, and submittal register in accordance with UFC 1-300-09N, Submittal Procedures.

The Contractor is encouraged to make product, material, and system selections during the project design and indicate these choices on the design documents. Accomplish this by submitting design drawings and specifications that include proprietary submittal information such as manufacturers name, product names, model numbers, product data, manufactures information, provided optional features, appropriate connections, fabrication, layout, and product specific drawings. Adherence to RFP submittal requirements and provision of DOR approved construction submittal information on the design submittals - eliminates the need for follow-on traditional construction submittals after the final design is approved.

The Contractor is required to submit proprietary information to describe the construction submittal information in the design documents for all products, materials, and systems submittals listed below:

a. All building envelope components

b. All roof components

c. Major mechanical and electrical equipment such as chillers, transformers, generators

Refer to 01 33 00.05 20, Construction Submittal Procedures for requirements

pertaining to Contractor proposed design changes or variations.

1.7 DESIGN DRAWINGS

Prepare, organize, and present design drawings in accordance with the requirements of UFC 1-300-09N, Design Procedures.

Submit all CADD files for the final drawings on CD-ROM disks in AutoCAD 2012 format. Drawing files shall be full files, uncompressed and unzipped.

1.7.1 Design Drawings Used as Shop Drawings

Design drawings may be prepared more like shop drawings to minimize construction submittals after final design is approved. If the Contractor chooses or is required to include the construction submittal information on the design documents, indicate proprietary information on the design drawings as necessary to describe the products, materials, or systems that are to be used on the project. Construction submittal information included directly in the design drawings must be approved by the DOR. All design documents must be professionally signed in accordance with UFC 1-300-09N, Design Procedures.

1.7.2 Drawing Format For Design Drawings Used as Shop Drawings

The Contractor-originated drawings will be used as the basis for the record drawings. Shop drawings included as design documents shall comply with the same drawing requirements such as drawing form, sheet size, layering, lettering, and title block used in design drawings.

1.7.3 Identification of Design Drawings Used as Shop Drawings

The Contractor's transmittal letter and submittal register shall indicate which desgn drawings are being submitted as shop drawings.

1.7.4 Naval Facilities (NAVFAC) Engineering Command Drawing Numbers

Number the final Contractor-originated design drawings consecutively with NAVFAC drawing numbers. Determine the total number of sheets required for the complete set of drawings before requesting the NAVFAC drawing numbers from the Contracting Officer.

1.7.5 Seals and Signatures on Documents

All final Contractor-originated design drawings shall be signed, dated, and bear the seal of the registered architect or the registered engineer of the respective discipline in accordance with UFC 1-300-09N. This seal shall be the seal of the Designer of Record for that drawing, and who is professionally registered for work in that discipline. A principal or authorized licensed or certified employee shall electronically sign and date final drawings and cover sheet, in accordance with UFC 1-300-09N. The design drawing coversheets shall be sealed and signed by the lead licensed architect or engineer of the project design team. Indicate the Contractor's company name and address on the drawing coversheets of each design submittal. Application of the electronic seal and signature accepts responsibility for the work shown thereon.

1.7.6 Units of Measure

Utilize English Inch-Pound units of measure on the design documents

1.8 SPECIFICATIONS

Provide a Contractor-originated design specification that in conjunction with the drawings, demonstrates compliance with requirements of the RFP. The specified products, materials, systems, and equipment that are approved by the DOR; submitted to the Government by the Contractor; and reviewed by the Contracting Officer shall be used to construct the project. UFGS sections contained in RFP Part 2 shall become a part of the Contractor-originated Division 01 specification without modification. Specification Sections contained in RFP Part 5 shall become a part of the Contractor-originated specification without modification.

1.8.1 Specifications Components and Format

The Contractor shall prepare design specifications that include a UFGS specification for each product, material, or system on the project. If the Contractor chooses or is required above to combine design and construction submittal information on the design documents, provide a UFGS specification and also proprietary information such as catalog cuts and manufacturers data that demonstrates compliance with the RFP. Organize the specifications using Construction Specification Institute (CSI) MasterformatTMunless the Contracting Officer requires a Uniformat organization. Navy's use of system specifications takes precedence over CSI Masterformat component breakdown and related component specifications. Provide project specifications to include the following:

Provide the specification cover sheet with the professional seal and signature of the lead liscensed architect or engineer of the project design team. Indicate the Contractor's company name and address on the specification coversheet.

Table of contents for entire specification.

Individual UFGS specification sections for each product, material, and system required by the RFP. Edit UFGS sections in accordance with RFP Part 4, PTS Section Z-10, Design Submittals.

If proprietary information is provided or required, include a coversheets for the product, material, or system information that is being proprietarily specified. This information is to follow the related UFGS specification.

If proprietary information is provided or required, include highlighted and annotated Catalog Cuts, Manufacturer's Product Data, Tests, Certificates, Manufactures information and letters for each product, material, or system that is being proprietary specified.

Coordinated submittal register for all products, materials and systems with each design submittal. Provide a cumulative register that identifies the design and construction submittals required by each design package along with previous design submittals. The DOR shall assist in developing the submittal register by determining which submittal items are required to be approved by the DOR. Complete all fields in the final submittal register in order to obtain Government approval of the final design.

1.8.2 Specifications Section Source Priority

Choose UFGS sections that describe the products, materials, and systems that are used on the project. Use current UFGS sections that are available on the Whole Building Design Guide website and give priority to the Unified Tri-Service UFGS sections (no spec number suffix) and UFGS that are prepared by NAVFAC (.00 20 suffix). Only use a UFGS section prepared by another DoD Component (.00 10, and .00 30 suffix), if an applicable NAVFAC prepared specification section does not exist. Do not use Army (.00 10 suffix) and NASA (.00 40 suffix) electrical and mechanical specifications. If no applicable UFGS technical specification exists to meet your project requirements, consult with the NAVFAC Component for guidance and create a new UFGS specification in accordance with UFC 1-300-02, Unified Facilities Guide Specifications (UFGS) Format Standard.

1.8.3 Fire Protection Specifications

Specifications pertaining to spray-applied fire proofing and fire stopping, exterior fire alarm reporting systems, interior fire alarm and detection systems, and fire suppression systems, including fire pumps and standpipe systems shall be either prepared by, or reviewed and approved by the Fire Protection DOR.

1.8.4 Identification of Manufacturer's Product Data Used as Specifications.

Provide complete and legible catalog cut sheets, product data, installation instructions, operation and maintenance instructions, warranty, and certifications for products and equipment for which final material and equipment choices have been made. Indicate, by prominent notation, each product that is being submitted including optional manufacturer's features, and indicate where the product data shows compliance with the RFP.

1.8.5 Specification Software

Submit the final specification source files in either MS Word or SpecsIntact.

1.9 DESIGN ANALYSIS

Prepare, organize, and present design analysis in accordance with the requirements of UFC 1-300-09N. The design analysis shall be a presentation of facts at the Concept Design Workshop to demonstrate the concept of the project is fully understood and the design is based on sound engineering principles. Provide design analyses for each discipline and include the following:

a. Basis of design that includes:

(1) An introductory description of the project concepts that addresses the salient points of the design;

(2) An orderly and comprehensive documentation of criteria and rationale for system selection; and

(3) The identification of any necessary licenses and permits that are anticipated to be required as a part of the design and/or construction process. The "Permits Record of Decision" (PROD) form provided shall be used for recording permits.

b. Code and criteria search shall identify all applicable codes and criteria and highlight specific requirements within these codes and criteria for critical issues in the facility design.

c. Calculations as specified and as needed to support this design.

d. Section titled "Sustainable Design" that addresses sustainable concepts and LEED Rating Analysis Report prepared by a LEED Accredited Professional recognized by the U.S. Green Building Council.

e. Draft and Final NAVFAC Sustainable and Energy Data Record Card (NSEDRC) that documents the energy usage and sustainable features of the building. Refer to Record Documents paragraphs in this section for requirements.

f. Section titled "Antiterrorism" that documents the antiterrorism features

g. Fall Protection Analysis

h. Draft and Interim DD Form 1354 that document the real property assets of the project. Refer to Record Documents paragraphs in this section for requirements.

1.9.1 Basis of Design Format

The basis of design for each design discipline shall include a cover page indicating the project title and locations, contract number, table of contents, tabbed separations for quick reference, and bound in separate volumes for each design discipline.

1.9.2 Design Calculations

Place the signature and seal of the designer responsible for the work on the cover page of the calculations for the respective design discipline.

1.9.3 Sustainable Design

Provide Guiding Principle Validation documentation to support compliance with the Guiding Principle Requirements stated in RFP Part 3, Chapter 2 of this RFP. In addition, provide documentation to support compliance with the USGBC LEED NC sustainable goal identified in RFP Part 3, Chapter 2.

Information and resources on sustainable design principles and guidelines are explained in the "Whole Building Design Guide" that can be found at www.wbdg.org.

1.9.3.1 LEED Green Building Rating System (GBRS) Submittals - USGBC Certification

Provide copies of the LEED Certification Registration Application and the complete support documentation to the LEED GBDC to obtain the minimum certificate level specified herein.

a. Provide the following information for the Basis of Design:

(1) A completed USGBC LEED NC Project Checklist indicating all LEED Prerequisites and Credits to be implemented into the facility design and total LEED score for the project.

(2) Description of how each LEED Prerequisite and Credit will be achieved.

(3) List of Architects or Engineers from Contractor's Design Team and who on the team is responsible for implementing each LEED Prerequisite and Credit into the facility design.

(4) Identify the Design Team's USGBC LEED Accredited Professionals.

b. For the submission specified, provide the following:

(1) At 35% Design submittal, provide documentation of the USGBC LEED Certification Registration Application.

(2) At 100% Design submittal, provide a USGBC LEED NC Project Checklist preliminary LEED documentation, in the form of a three-ring binder, of all LEED Prerequisites and Credits to be obtained as required by the USGBC LEED NC Rating System.

(3) At final design submittal, update the USGBC LEED NC Project Checklist and LEED documentation binder with any changes and include an electronic copy of the LEED documentation.

(4) Within thirty (30) days of Beneficial Occupancy Date, developed and submit the project case study for the U.S Department of Energy's Federal Energy Management Program "High Performance Federal Buildings Database" (http://www.eere.energy.gov/femp/highperformance/).

(5) Within 60 days after the beneficial Occupancy Date (BOD), submit LEED Certification Registration Application and complete LEED Certification Documentation to USGBC for certification. After LEED certification is obtained, provide the plaque and 5 color copies of the LEED Certification to the Contracting Officer. Mat and frame the original LEED Certification document.

1.9.3.2 Guiding Principle Validation

Provide a design that incorporates sustainable techniques and materials to the greatest extent possible and to meet as many points applicable to the project and monetarily feasible. Provide an analysis of the Guiding Principle Requirements identified in RFP Part 3, Chapter 2 as it applies to the design of this project and include updated information with each design submittal.

Guiding Principles Validation is met when each item on the approved High Performance and Sustainable Building (HPSB) Checklist is achieved, required Guiding Principle Requirements documentation is included in the Sustainability Notebook, and the Contracting Officer approves the required sustainable documentation. HPSB Checklist is described in the UFC 1-200-02 and for the Navy; this HPSB Checklist is the NAVFAC Sustainable Energy Data Record Card (NSEDRC). Therefore when this specification refers to the HPSB Checklist, it is actually referring to the NAVFAC Sustainable Energy Data Record Card and will be referred to as HPSB/ NSEDRC Checklist throughout this specification

Provide the following information for the Basis of Design:

(1) A completed HPSB/ NSEDRC Checklist. Approval of this HPSB/NSEDRC

Checklist will establish the sustainable goals for the project. Variation from that approved Checklist must be approved by the DOR and the Contracting Officer.

(2) Description of how each applicable Guiding Principle Requirement and other sustainable features and strategies will be achieved.

(3) Identify the Design Team's LEED Accredited Professional responsible for coordinating the sustainable requirements of the project.

b. For the submission specified, provide the following:

(1) A Preliminary HPSB/ NSEDRC Checklist at the Post Award Kick Off Meeting. Submit for approval by the Contracting officer.

(2) At sixty (60) days after Design Complete, submit a HPSB/ NSEDRC Checklist and Guiding Principle Requirement documentation, in the form of a three-ring binder, of all Guiding Principle Requirement to be achieved obtained.

(3) At sixty (60) days after BOD, submit a HPSB/ NSEDRC Checklist and the Guiding Principle Requirement documentation binder with any changes and include an electronic copy of the LEED documentation. The project LEED Accredited Professional shall approve the submittal prior to forwarding it to the Government.

1.9.3.3 EPA Designated Products

Use products that meet or exceed the minimum requirements of this RFP and the EPA guideline standards for recovered content to the maximum practicable extent in the performance of the contract. See www.epa.gov/cpg/products.htm for a list of EPA designated products and a list of manufacturers and suppliers of EPA designated products.

1.9.4 Historic Preservation and Planning Commission Submission

Prepare the presentation materials required to obtain approval from the Historic Preservation and Planning Commissions having jurisdiction over the site location. The submission of the materials to the agencies will be accomplished by the Government. Consult with the Planner in the Base Development Department of NAVFAC Washington. The Planner will advise the contractor on the specific requirements and prospective timetable of the submission. The submission will address the National Capital Planning Commission (NCPC), the Commission of Fine Arts, and the State Historic Preservation Officer (SHPO) requirements. Refer to UFC 1-300-09N for specific submittal requirements. The Contractor is responsible for preparing the submittal package, presenting the project in public meeting, if called upon by the Government; and to modify the submittal and contract documents to incorporate the comments of the agencies having jurisdiction to obtain project approval.

1.9.4.1 Submissions For External Review Agencies

Submission to NCPC is a requirement for Federal building projects located in the National Capital Region. These submittals are often linked with a prior requirement to submit projects affecting historic buildings and sites to the cognizant State Historic Preservation Office (SHPO) and the National Environmental Planning Act (NEPA). The coordination and official submittal of the project to the relevant agencies will be coordinated

through an appointed NCPC point of contact. The Government Design Manager will refer the Contractor to this person at an early stage. The point of contact will advise the Contractor on the specific requirements and prospective timetable for the project review(s). There are three (3) levels of review, based upon the development and evolution of a project:

Schematic - Concept review
Preliminary - Preliminary submissions must be made for all new construction or renovation projects after tentative design decisions have been made but well before detailed design work begins, typically at the 20 to 25 percent development stage. Timely submissions of preliminary plans are vital to avoid costly revisions in later detailed design stages.
Final - Final submissions must follow preliminary submissions, after design decisions have been made (including building and landscaping materials), typically at the 60 to 70 percent development stage. (Note: It is up to POC to determine, within a reasonable range of industry standards, what 20-25% and 60-70% represents.)

The A/E should plan to submit the project for each level of review. The contractor will be responsible for the preparation of all materials needed for the submission of the project to NCPC and responsible for any subsequent changes necessary for the approval or final NCPC report to be issued on the project. The contractor will work directly through the assigned POC to any regulatory agency.

1.9.4.2 Contents of a Typical Submission Package

The submission package consists of the following:

Vicinity Map, Schematic, Site Plan, Landscape and Grading Plan, Floor Plans, Elevations, Sections, Roof Plan, Rendered Plans and Perspectives, and Storm Water Management Plan represented in:

a. Six sets of architectural drawings (half size)
b. Three sets of 8-1/2 x 11 inch (page size) color drawings
c. Photographs of the existing site conditions annotated to identify and locate the contents
d. Project Data Report (Project Narrative) in electronic editable medium.
e. Completed SHPO and NEPA documentation

1.9.4.3 Schedule

The A/E should anticipate up to three months for each of the NCPC review periods and up to six months for a final report to be issued. Additionally, the A/E should anticipate the need to present larger projects at up to four staff level meetings. The assigned point of contact will have the lead role in coordinating all reviews/presentations. Construction cannot begin prior to NCPC issuing approval or a final report.

1.9.5 Fall Protection Analysis

Eliminate fall hazards in the facility or if not feasible provide control measures to protect personnel conducting maintenance work after completion of the project. Identify fall hazards in the Basis of Design with the Design Development and Prefinal submittals. The analysis shall describe how fall hazards are considered, eliminated, prevented or controlled to prevent maintenance personnel from exposure to fall hazards while performing work at heights. Refer to RFP Part 2, UFGS Section 01 35 26.05

20, GOVERNMENT SAFETY REQUIREMENTS FOR DESIGN-BUILD for fall hazard protection requirements.

1.10 PROJECT RENDERING

Provide a full color photo-realistic architectural rendering of the primary facade or facades of the facility. Depict the final, approved facility design and accurately illustrate the proposed final constructed facility including but not limited to, massing, fenestration pattern, material selections, colors, textures, landscaping, paving, and to the extent directed - the surrounding context.

Renderings created using traditional casein painted techniques or computer generated renderings are acceptable. Develop computer generated renderings using a current rendering engine suitable to produce photo-realistic images. Renderings created solely in BIM or CADD authoring software are not acceptable.

Renderings shall include realistic advanced lighting characteristics (natural and/or synthetic) and true ambient lighting and shading characteristics. Provide images that are sharp in detail and resolution through proper anti-aliasing techniques. Material maps shall be comprised of advanced techniques and practices to ensure materials are an exact representation of the facility product/finish selections.

1.10.1 Preliminary Rendering Planning

Provide planning PDF drawings of the facility to exhibit the proposed rendering appearance. Submit not less than 3 alternative views for review and approval to determine the most advantageous view. The Preliminary rendering submittal shall display the following characteristics of the final rendering;

a. Selection of primary facade(s)

b. Point of view (aerial, eye-level, elevated,...etc)

c. Close-up or wide angle

d. Extent of surrounding context

Adjust view and resubmit if an alternative to the submitted views is required for the rendering planning approval. Submit rendering planning submittal during the Preliminary Design Submittal.

1.10.2 Prefinal Rendering

Submit three (3) hard copies of the prefinal rendering to indicate compliance with planning decisions, establish level of detail and rendering elements to be employed such as people, cars, vegetation/trees. Indicate proposed colors, textures, foreground and background. Use processes and printing equipment that will be used on the final rendering. Submit Prefinal rendering submittal for approval with the Prefinal Design Submittal.

1.10.3 Final Rendering

Provide the final rendering submission that complies with the following requirements;

a. The rendering shall be a full vignette and fully developed. Approximate finished size shall be a minimum of 24 by 30 inches (610 by 760mm) with a 16 by 20 inches (406 by 508mm) minimum inside mat dimension. Provide reduced size rendering(s) with a minimum finished size of 10 by 12 inches (254 by 304mm) and a minimum 8 by 10 inches (203 by 254mm) inside mat dimension.

b. Provide final original color rendering, three full size, and two (2) reduced size high resolution reproductions of the original rendering, and two (2) sets of the digital master images on DVD media. Original and reproductions shall be mounted on acid free heavy illustration board and double-matted with complimentary colored, acid free mat boards. Frame rendering(s) with contemporary polished metal frames and single strength, non-glare glass. Print the Project name, location, Architect/Engineer firm's name on the matting. On the back of the renderings and reproductions, indicated the project name, the location, the contract number, and the date of reproduction.

c. Match the exterior color scheme approved for the facility.

d. Provide photo-realistic quality rendering elements such as people, cars, vegetation/trees, etc.

e. Provide digitally reproductions of the rendering using a minimum 600 dpi resolution for print reproduction on 24 by 36 inch (609 by 914mm) stock with no loss of fidelity, quality or detail from the master image.

f. Provide each set of digital master images in both TIF and JPEG formats. Save JPEG images using the highest quality setting (minimum compression). Provide the following as a minimum;

(1) One set including the unit insignia(s) for the tenant activity, the service insignia (Navy, Marine Corps, Army, or Air Force), the name of the facility, name of installation, and the names of the contractor and design professional.

(2) One set including the image only, without any identifying information other than that which may be depicted as a part of the building signage within the rendering.

g. Submit the final rendering for approval 30 days after the Final Design Submittal approval. Ship the rendering, the digital copies and the digital files in resilient packaging to ensure damage free delivery. Deliver to;

1.11 Facility Recognition Plaque

Provide a facility recognition plaque for this facility in accordance with UFC 1-300-09N, Design Procedures. See Appendix R for a detailed description.

1.12 RECORD DOCUMENTS

1.12.1 Record Drawings

The as-built modifications shall be accomplished by electronic drafting methods on the Contractor-originated .DWG design drawings to create a complete set of record drawings.

a. For each record drawing, provide CADD drawing identical to signed Contractor-originated.PDF drawings, that incorporates modifications to the as-built conditions. In addition, copy initials and dates from the Contracting Officer approved .PDF documents to the title block of the record CADD.DWG drawings. The RFP reference or definitive drawings are not required for inclusion in the record set of drawings.

b. After all as-built conditions are recorded on the CADD.DWG files, produce a PDF file of each individual record drawing in conformance with UFC 1-300-09N. Electronic signatures are not required on record drawings.

c. Povide an searchable electronic copy of the photo documentation used in the QC Daily Reports. Refer to UFGS 01 45 00.05 20, Design and Construction Qualiy Control

d. Provide one full size mylar hardcopy of final record drawings to Quantico.

1.12.2 Source Documents

Provide the specifications, design analysis, reports, surveys, calculations, and any other contracted documents on the CD-ROM disk with the record drawings.

1.12.3 NAVFAC Sustainable and Energy Data Record Card

Submit the NAVFAC Sustainable and Energy Data Record Card (NSEDRC) to document the energy usage and sustainable features of the facility. Follow the instructions provided and fill in the blank editable Adobe .PDF form available on the Whole Building Design Guide at the following web address: http://www.wbdg.org/references/pa_dod_sust_contract.php . Prepare the following submissions;

a. Draft submission. As a part of the Final Design submission the DOR shall complete the NSEDRC and include it as part of the Design Analysis and submit to the Contracting Officer for approval.

b. Final Submission. The Contractor and Designer of Record shall complete the electronic file documenting the NSEDRC with final data and provide the Final Submission 60 days prior to the Beneficial Occupancy Date (BOD) of the facility. The Final submission shall update the Draft submission information and submit to the Contracting Officer for approval.

1.12.4 DD Form 1354

Prepare a Draft and Interim DD Form 1354, TRANSFER AND ACCEPTANCE OF MILITARY REAL PROPERTY, in accordance with UFC 1-300-08, available at http://www.wbdg.org/ccb/DOD/UFC/ufc_1_300_08.pdf. All assets must be broken out by construction categories that are found in the DD Form 1391 and the "Category Codes for Military Real Property" from NAVFAC P-72. Marine Corps Base Quantico Asset Management Section will provide facility numbers for the real property facilities created by the project as appropriate. The Contractor shall coordinate the identification of appropriate asset construction categories with the Contracting Officer and the Real Property Accounting Officer.

a. Draft DD Form 1354. DOR shall determine applicable real property assets broken out by construction categories and submit a "Draft DD Form 1354" for Government approval as a part of the Design Analysis included with the Prefinal Design submittal. "Draft DD Form 1354" must include all quantities and units of measure, but does not require cost breakdown. Download the current blank editable DD Form 1354 in ADOBE (PDF) from the following web site:
http://www.dtic.mil/whs/directives/infomgt/forms/eforms/dd1354.pdf

b. Interim DD Form 1354. Contractor shall coordinate with the DOR and update the Draft DD Form 1354 submission to include any additional assets, improvements, or alterations that occurred during construction. Use the Draft DD Form 1354 and the UFGS Section 01 20 00.05 20, Price and Payment Procedures to identify costs. Submit a modified Interim DD Form 1354 to the Government for approval 90 days prior to the Beneficial Occupancy Date (BOD). If modifications to the Interim DD Form 1354 are required by the Government, the corrected version must be submitted prior to the BOD.

The Final DD Form 1354 will be prepared by MCB Quantico Real Property Accountable Officer (RPAO) at final project closeout after all outstanding issues have been resolved. The Final DD Form 1354 will be prepared using the Contractor provided updated project data.

Coordinate with Section 01 20 00.05 20, Price and Payment Procedures for construction categories and associated category codes. The Contractor's Earned Value Report shall allocate the total cost of construction to the appropriate category codes.

When documenting demolition work, the DD Form 1354 shall list the quantitative data associated with this work as a negative value to show the cost should be deleted from the Navy asset data store. Coordinate with the Installation Real Property POC to assist in determining the negative value for demolition work.

PART 2 PRODUCTS

2.1 CONSOLIDATED RFP DOCUMENTS

Within four weeks after contract award, provide three electronic and hard copies of consolidated RFP documents incorporating the Contractor's Proposal and all RFP amendments and revisions that are contained in the contract award. Identify the changes to the RFP with the "Red-lining" or "Track Changes" feature of SpecsIntact or MS Word to highlight the pre-award modifications to the contract. Identify the amendment source at each addition and deletion by annotation, such as footnote or reference in parenthesis.

2.2 DESIGN SUBMITTALS

Complete the Contractor-originated design submittals as defined by this contract, and coordinate with the approved design network analysis schedule.

2.2.1 Design Submittal Packages

The Government prefers to review for Quality Assurance (QA) as few submittal packages as possible. Site and Building Design Submittal Packages are required, however Critical Path Design Submittals are acceptable if they are substantiated as having an impact to the critical path in the Government approved Network Analysis Schedule. A Critical Path

submittal shall include all design analyses, drawings, specifications and product data required to fully describe the project element for Government review.

Examples of project elements that may be submitted as Critical Path Design Submittal Packages are: Master Plan Design, Demolition Design, Foundation Design, Structural Design, Building Enclosure Design, Remaining Work Design, Furniture/Equipment Design, long lead items, or any other construction activity or project element that can be organized into a submittal package that can be reviewed and approved by the Government without being contingent upon subsequent design submittals.

2.2.1.1 Site Design

The Site Design typically includes the following components:

a. Master Site Plan

b. Demolition

c. Site work including Environmental

d. Geotechnical

2.2.1.2 Building Design

The Building Design typically includes the following components:

a. Foundation

b. Structural

c. Building Enclosures

d. Remaining Work

e. Furniture/Equipment

2.2.2 Required Design Submittals

(1) Provide the following Design Submittal packages. Provide comprehensive, multi-discipline design packages that include design documentation for project elements, fully developed to the design stage indicated, and in accordance with UFC 1-300-09N, except where specified otherwise.

a. Concept Design - GOVERNMENT PROGRESS QA. 21 calendar day Government review time.

b. Design Development (50%-60%) - GOVERNMENT PROGRESS QA. 21 calendar day Government review time. (50%-60%) Contractor must allow changes to the floor plan up to & including, at minimum, the 50%-60% (2nd) submission, without additional cost to the Government. And the 50%- 60% (2nd) submission shall at minimum include Architectural floor plans, mechanical, plumbing, electrical, communications, and fire protection plans and specs.

c. Prefinal (100%) Design - GOVERNMENT PROGRESS QA. 21 calendar day

Government review time.

d. Final Design - 14 calendar day Government review time.

(2) The following dates will NOT be included (by the Contractor) in the 14 or 21 "calendar day" Government review time: 26 - 30 Nov; 13 Dec to 3 Jan inclusive. It is permissible for the Contractor to make submissions available for Government review during those dates, but those dates WILL NOT COUNT against the review time.

2.2.3 Critical Path Design Submittals

Provide Critical Path Design Submittals that include design documents for the project elements involved. Include and provide full documentation that would normally have been provided in earlier submittal stages, such as Design Development Phase.

a. 100 percent (Prefinal) Design - Government Progress QA. 21 calendar day Government review time.

b. Final Design - Government QA. 21 calendar day Government review time for submittals requiring Government approval prior to construction.

2.2.4 Review Copies of Design Submittal Packages

a. Provide bound copies of each design submittal package for review to the following reviewers. Addresses for mailing will be furnished at the PAK meeting.

(1) 15 paper copies to the NAVFAC component and 1 electronic copy of the Final submittals to:

Kamal El-Ali
NAVFAC - Washington
Washington Navy Yard
IPT - GOLD, Bldg 212
1314 Harwood Street S.E.
Washington, DC 20374

(2) 1 paper copy to:
Branch Head Base Telephone
Mr. Featherstone
Hill Ave., Bldg 1999
Quantico, VA 22134
PH(703)784-4602
POC WO Joseph

(3) 2 paper copies and 1 electronic copy to:
Mel Gruber
Public Works
2004 Barnett Ave.
Quantico, VA 22134-0855
PH(703)784-5164
POC Gizana Kassay 703-784-5464

(4) 1 paper copy to:

Commanding Officer
Security Battalion
2043 Barnett Ave.
Quantico, VA 22134
PH: (703) 784-4172
POC: Mr. Eric Horton (703) 784-4172

(5) 1 paper copy to:
Marine Corps Base Fire
c/o Mel Gruber
2004 Barnett Ave.
Quantico, VA 22134
ATTN: Assistant Chief Steve Houchin
PH(703)784-3734

(6) 2 paper copies to:
Marine Corps Base
NREA Branch (B 046)
ATTN: Amy Denn
3049 Bordelon St.
Quantico, VA 22134

(7) 1 paper copy to:
Commander (B 51)
3250 Caitlin Ave., Suite 101
ATTN: Safety Division, Wayne Shelton
Quantico, VA 22134
PH (703)432-1128

(8) 1 paper copy to:
Marine Corps Base Quantico
3252 Barnett Ave.
Room 202A (2nd Floor) ATTN: Al Parson
Quantico, VA 22134
PH (703)784-1405
POC Darrell Davis 703-784-1492

(9) 1 paper copy to:
Acting Director CVIGC G-3 (B034), Bill Hauptfleisch
2009 Zeilin Rd. (3rd Floor) Room 305
Quantico, VA 22134-5001
PH (703)784-2381

(10) 6 paper copies and 6 electronic copies to:
Mr. Michael Hawkins
2300A Louis Road
Quantico, VA 22134
PH (703)784-6832
POC Rodney Hood (703) 784-6940

(11) 1 paper copy to:
Mr. Rich Reisch
Public Works Planning
2004 Barnett Avenue
Quantico, VA 22134-0855
PH (703)784-5490
POC Linda Murawski (703) 784-5077

(12) 3 paper copies and 3 electronic copies to:
Mr. Rick Drake
ROICC
2004 Barnett Avenue
Quantico, VA 22134-0855
PH (703)784-5465
POC Mark Ethridge

(13) 1 paper copy and 1 electronic copy to:
Mr. Andy Duncan, Clark Nexsen
6160 Kempsville Circle, #200A
Norfolk, VA 23502
PH (757)455-5800

b. Provide the same quantities of copies for resubmittals, as required for each design submittal.

2.2.5 Design Submittal Review Schedule

Use the time frames for Government submittal review identified in the RFP. For construction scheduling purposes add additional time to the identified minimum review time periods to allow for the following scheduling conditions;

1. Submittals received after noon will be logged in on the following business day.

2. Federal holidays, including the period between Christmas and New Years Day, will be considered non-working days for Government personnel in reviewing design submittals and attending design related meetings.

3. Postpone delivery if Government personnel to receive the submittal are unavailable. Assure in advance of the submittal delivery it can be received.

4. Postpone delivery when heightened security restricts access to the Base. Coordinate heightened security requirements in advance with the CM.

5. Period of review for a resubmittal is the same as the initial submittal. Review time for resubmittals caused by non-conformance, do not result in a change in contract duration or cost.

2.2.6 Distribution of Approved Final Design Drawings and Specification to Government Representatives

Submit within 14 calendar days of receiving the Government Approved Final Design Documents, which includes any Critical Path Final Design Document Packages, electronic and hardcopy(s) of these final documents to Government representatives for use during the construction of the project. If Critical Path Submittal Packages are used, provide coversheets and index to identify each sheet and how this Critical Path Submittal Package fits into the overall project. Provide the number and type of copies of the final design documents to the following Government representatives (names to be verified at kick-off meeting):

a. Two electronic and 16 hard copy(s) to the Project Manager (name, address, and phone number)

b. Two electronic and two hard copy(s) to the Design Manager

c. Those electronic and two hard copies of the specs; one full size hard copy drawings, and one-half size copy of the drawings to the Construction Manager

d. One electronic and one hard copy to the Contracting Officer

e. One electronic and one hard copy to the Public Works Officer

2.3 IDENTIFICATION OF DESIGN SUBMITTALS

Provide a title sheet to clearly identify each submittal, the completion status, and the date. The title sheet shall use the standard format indicated in the UFC 1-300-09N for title sheets. The title sheet shall be unique to a particular design submittal. Submit the project title sheet with design status and date for the design submittals.

2.3.1 Critical Path Submittal Title Sheet

Identify Critical Path submittals as such, and include a title sheet indicating the type of critical path submittal, the status, and the date.

2.3.2 Construction Document Validation

All CAD design documents used to construct the facility must bear a visible and legible AutoCAD generated plotstamp in the lower right hand margin of each drawing. The plotstamp information on the jobsite construction documents must match the plotstamp information contained on the following development stages of the design documents:

a. The Final Critical Path Submittal or the Final Design Submittal professionally signed by the DOR and submitted for Government approval.

b. The Final Critical Path Submittal or the Final Design Submittal drawings that have approved by the Government. This development stage may be combined with "c." below, if issued at the same time.

c. The Final Critical Path or Final Design drawings that have been included in the contract by modification.

d. The Final Critical Path or Final Design drawings which include subsequent revisions to the design documents that have been included in the contract by modifications.

Issue new drawings for construction which bear the current plotstamp once a new development stage of the design documents has been accomplished. Design documents which do not bear a plotstamp that matches the corresponding plotstamp exhibited on the design documents described above, shall not be used for the construction of the project. The plotstamp must bear the date and time of the plot, at a minimum. Maintain a plotstamp record at the jobsite that lists the applicable plotstamp information for each drawing through each stage of development described above.

PART 3 EXECUTION

3.1 CONTRACTOR'S RESOLUTION OF COMMENTS

Provide written responses to all written comments by the Government. Resubmittal of an unacceptable design submittal shall be a complete package that includes all the required, specified components of that design

submittal. When required by the Government, Contractor resubmittal of design package, due to nonconformance to the contract, is not a delay in the contract.

3.2 DESIGN CHANGE AND VARIATIONS

A design change is when the design is revised from what was reviewed by the Government during any phase of the design process prior to Government approval of the Final Design. A variation is any portion of the design that differs from the requirements of the solicitation, accepted proposal, or final design after Government approval of the Final Design. Design changes and variations require Government approval and only variations that are advantageous to the Government will be considered. Refer to UFGS 01 33 00.05 20, Construction Submittal Procedures for further explanation and requirements of design change and variation.

The Contractor shall immediately notify the Government of all potential design changes and variations via a Request for Information (RFI) to the Contracting Officer. Design changes or variations that the Contractor asserts will require a contract modification to adjust the cost/price or schedule shall not be incorporated in the design during any phase of the design process without prior documented approval from the Contracting Officer. Contractors will not receive compensation for any unauthorized design changes or variations which have been included in the Government approved Final Design. Include the following information in the design change and variation RFIs:

a. Indicate the RFP Parts, sections, and paragraphs affected by this design change or variation,

b. The scope of work of the design change or variation,

c. The reason for the proposed change,

d. Explanations of how the variation is advantageous to the Government.

d. Indicate which upcoming design submittal will be affected by the subject design change,

e. Explanation of contract cost/price and schedule impacts or provide an affirmative statement indicating that the design change or variation will not have an impact on the contract cost/price or schedule.

f. Coordination measures proposed to incorporate the design change or variation into the construction

g. Upon request by the Contracting Officer, submit a cost proposal prepared using the Uniformat Work Breakdown Structure for all design changes and variations that have cost or schedule impacts. Submit a proposal that provides cost breakdown of each Uniformat system or subsystem that is applicable to the design change or variation. Utilize the units of measure indicated in the Uniformat Structure at the NAVFAC DB RFP webpage, http://www.wbdg.org/ndbm/uniformat.php .

3.3 THE CONTRACT AND ORDER OF PRECEDENCE

3.3.1 Contract Components

The contract consists of the solicitation, the approved proposal, and the

final design.

3.3.2 Order of Precedence

NFAS Clause 5252.236-9312. In the event of conflict or inconsistency between any of the below described portions of the conformed contract, precedence shall be given in the following order:

a. Any portions of the proposal or final design that exceed the requirements of the solicitation.

(1) Any portion of the proposal that exceeds the final design.

(2) Any portion of the final design that exceeds the proposal.

(3) Where portions within either the proposal or the final design conflict, the portion that most exceeds the requirements of the solicitation has precedence.

b. The requirements of the solicitation, in descending order of precedence:

(1) Standard Form 1442, Price Schedule, and Davis Bacon Wage Rates.

(2) Part 1 - Contract Clauses.

(3) Part 2 - General Requirements.

(4) Part 3 - Project Program Requirements.

(5) Part 6 - Attachments (excluding Concept Drawings).

(6) Part 5 - Prescriptive Specifications exclusive of performance specifications.

(7) Part 4 - Performance Specifications exclusive of prescriptive specifications.

(8) Part 6 - Attachments (Concept Drawings).

3.3.2.1 Government Review or Approval

Government review or approval of any portion of the proposal or final design shall not relieve the Contractor from responsibility for errors or omissions with respect thereto.

-- End of Section --

THIS PAGE HAS BEEN INTENTIONALLY LEFT BLANK

SUBMITTAL REGISTER

CONTRACT NO.

TITLE AND LOCATION
Academic Instruction Facility, TECOM Schools

CONTRACTOR

ACTIVITY NO	TRANSMITTAL NO	SPEC SECT	DESCRIPTION ITEM SUBMITTED	PARAGRAPH #	CLASSIFICATION	GOVT OR A/E REVWR	CONTRACTOR: SCHEDULE DATES			CONTRACTOR ACTION			APPROVING AUTHORITY					
							SUBMIT	APPROVAL NEEDED BY	MATERIAL NEEDED BY	ACTION CODE	DATE OF ACTION	DATE FWD TO APPR AUTH/ DATE RCD FROM CONTR	DATE FWD TO OTHER REVIEWER	DATE RCD FROM OTH REVIEWER	ACTION CODE	DATE OF ACTION	MAILED TO CONTR/ DATE RCD FRM APPR AUTH	REMARKS
(a)	(b)	(c)	(d)	(e)	(f)		(g)	(h)	(i)	(j)	(k)	(l)	(m)	(n)	(o)	(p)	(q)	(r)
		01 14 00.05 20	SD-01 Preconstruction Submittals															
			List of contact personnel	1.4.1.1	G													
			Personnel List	1.5.5	G													
			Vehicle List	1.5.1	G													
			Statement of Acknowledgement	1.5.2	G													
			Form SF 1413															
		01 20 00.05 20	SD-01 Preconstruction Submittals															
			Schedule of Prices	1.3	G													
		01 30 00.05 20	SD-01 Preconstruction Submittals															
			Insurance	1.3	G													
		01 31 19.05 20	SD-01 Preconstruction Submittals															
			Design Submittal Packaging	1.3.2	G													
			Project Schedule	1.3.9	G													
			Performance Assessment Plan	1.3.8	G													
			(PAP)															
			Design Presentation	1.3.5	G													
			CDW Facilitator Experience	1.3.6.1	G													
			Resume															
			CDW Preliminary Concept	1.3.6.2	G													
			Design															
			CDW Cost Estimate	1.3.6.2	G													
			Concept Design Workshop	1.3.6.3	G													
			Report															
		01 32 16.05 20	SD-01 Preconstruction Submittals															
			Design and Construction	1.2	G													
			Schedule															

SUBMITTAL REGISTER

CONTRACT NO.

TITLE AND LOCATION
Academic Instruction Facility, TECOM Schools

CONTRACTOR

ACTIVITY NO	TRANSMITTAL NO	SPEC SECT	DESCRIPTION ITEM SUBMITTED	PARAGRAPH #	CLASSIFICATION	GOVT OR A/E REVWR	CONTRACTOR: SCHEDULE DATES			CONTRACTOR ACTION			APPROVING AUTHORITY					
							SUBMIT	APPROVAL NEEDED BY	MATERIAL NEEDED BY	ACTION CODE	DATE OF ACTION	DATE FWD TO APPR AUTH/ DATE RCD FROM CONTR	DATE FWD TO OTHER REVIEWER	DATE RCD FROM OTH REVIEWER	ACTION CODE	DATE OF ACTION	MAILED TO CONTR/ DATE RCD FRM APPR AUTH	REMARKS
(a)	(b)	(c)	(d)	(e)	(f)		(g)	(h)	(i)	(j)	(k)	(l)	(m)	(n)	(o)	(p)	(q)	(r)
		01 32 16.05 20	Design and Construction	1.4	G													
			Schedule															
			Design and Construction	1.5	G													
			Schedule															
		01 32 17.05 20	SD-01 Preconstruction Submittals															
			Qualifications	1.5	G													
			Design Baseline Network	1.3	G													
			Analysis Schedule (NAS) Package															
			Construction Baseline Network	1.3	G													
			Analysis Schedule Package															
			Construction Baseline Network	1.7	G													
			Analysis Schedule Package															
			SD-07 Certificates															
			Monthly Network Analysis	1.7.1	G													
			Schedule Updates															
			SD-11 Closeout Submittals															
			As-Built Schedule	1.7.2	G													
		01 33 00.05 20	SD-01 Preconstruction Submittals															
			Submittal Register Format	1.3.1	G													
		01 33 10.05 20	SD-01 Preconstruction Submittals															
			Consolidated RFP Documents	2.1	G													
			Submittal Register	1.5.5	G													
			SD-04 Samples															
			rendering	1.10.3	G													
			SD-05 Design Data															
			Design Drawings	1.7	G													

SUBMITTAL REGISTER

CONTRACT NO.

TITLE AND LOCATION
Academic Instruction Facility, TECOM Schools

CONTRACTOR

ACTIVITY NO	TRANSMITTAL NO	SPEC SECT	DESCRIPTION ITEM SUBMITTED	PARAGRAPH #	CLASSIFICATION	GOVT OR A/E REVWR	CONTRACTOR: SCHEDULE DATES			CONTRACTOR ACTION			APPROVING AUTHORITY					
							SUBMIT	APPROVAL NEEDED BY	MATERIAL NEEDED BY	ACTION CODE	DATE OF ACTION	DATE FWD TO APPR AUTH/ DATE RCD FROM CONTR	DATE FWD TO OTHER REVIEWER	DATE RCD FROM OTH REVIEWER	ACTION CODE	DATE OF ACTION	MAILED TO CONTR/ DATE RCD FRM APPR AUTH	REMARKS
(a)	(b)	(c)	(d)	(e)	(f)		(g)	(h)	(i)	(j)	(k)	(l)	(m)	(n)	(o)	(p)	(q)	(r)
		01 33 10.05 20	Specifications	1.8	G													
			Design Analysis	1.9	G													
			Design Submittals	2.2	G													
			Sustainable Design	1.9.3	G													
			Project Rendering	1.10	G													
			Facility Recognition Plaque	1.11	G													
			Historic Preservation and	1.9.4	G													
			Planning Commission Submission															
			SD-07 Certificates															
			LEED Green Building Rating	1.9.3.1	G													
			System (GBRS)															
			LEED Certification Registration	1.9.3.1	G													
			Application															
			LEED Certification	1.9.3.1	G													
			SD-11 Closeout Submittals															
			Record Documents	1.12	G													
			NAVFAC Sustainable and Energy	1.12.3	G													
			Data Record Card															
			DD Form 1354	1.12.4	G													
		01 33 29.00 20	SD-01 Preconstruction Submittals															
			Preliminary Sustainability	1.4.1.1														
			Notebook Submittal															
			Preliminary High Performance	1.4.2.1														
			and Sustainable Building Checklist															
			SD-07 Certificates															
			Third Party Certification (TPC)	1.3.4														

SUBMITTAL REGISTER

CONTRACT NO.

TITLE AND LOCATION
Academic Instruction Facility, TECOM Schools

CONTRACTOR

ACTIVITY NO	TRANSMITTAL NO	SPEC SECT	DESCRIPTION ITEM SUBMITTED	PARAGRAPH #	CLASSIFICATION	GOVT OR A/E REVWR	CONTRACTOR: SCHEDULE DATES			CONTRACTOR ACTION			APPROVING AUTHORITY					
							SUBMIT	APPROVAL NEEDED BY	MATERIAL NEEDED BY	ACTION CODE	DATE OF ACTION	DATE FWD TO APPR AUTH/ DATE RCD FROM CONTR	DATE FWD TO OTHER REVIEWER	DATE RCD FROM OTH REVIEWER	ACTION CODE	DATE OF ACTION	MAILED TO CONTR/ DATE RCD FRM APPR AUTH	REMARKS
(a)	(b)	(c)	(d)	(e)	(f)		(g)	(h)	(i)	(j)	(k)	(l)	(m)	(n)	(o)	(p)	(q)	(r)
		01 33 29.00 20	SD-11 Closeout Submittals															
			Final Sustainability Notebook	1.4.1.1														
			Submittal															
			Final High Performance and	1.4.2.1														
			Sustainable Building															
			(HPSB/NSEDRC) Checklist															
			Amended Final Sustainability	1.4.1.1														
			Notebook Submittal															
			Third Party Certification Plaque	3.2.1														
			and Certificates															
		01 35 26.05 20	SD-01 Preconstruction Submittals															
			Accident Prevention Plan -	1.6.3.1	G													
			Pre-Design Submittal															
			Accident Prevention Plan -	1.6.3.2	G													
			Pre-Construction Submittal															
			Activity Hazard Analysis (AHA)	1.6.3.3	G													
			Crane Critical Lift Plan	1.6.3.2	G													
			Qualifications	1.6.3.2	G													
			SD-06 Test Reports															
			Accident Notifications	1.7.1														
			Accident Reports	1.7.2														
			Crane Reports	1.7.3														
			Monthly Exposure Report	1.4														
			SD-07 Certificates															
			Confined Space Entry Permit	1.6.2.1														
			Hot Work Permit	1.6.2.1														

SUBMITTAL REGISTER

CONTRACT NO.

TITLE AND LOCATION
Academic Instruction Facility, TECOM Schools

CONTRACTOR

ACTIVITY NO	TRANSMITTAL NO	SPEC SECT	DESCRIPTION ITEM SUBMITTED	PARAGRAPH #	CLASSIFICATION	GOVT OR A/E REVWR	CONTRACTOR: SCHEDULE DATES			CONTRACTOR ACTION			APPROVING AUTHORITY					
							SUBMIT	APPROVAL NEEDED BY	MATERIAL NEEDED BY	ACTION CODE	DATE OF ACTION	DATE FWD TO APPR AUTH/ DATE RCD FROM CONTR	DATE FWD TO OTHER REVIEWER	DATE RCD FROM OTH REVIEWER	ACTION CODE	DATE OF ACTION	MAILED TO CONTR/ DATE RCD FRM APPR AUTH	REMARKS
(a)	(b)	(c)	(d)	(e)	(f)		(g)	(h)	(i)	(j)	(k)	(l)	(m)	(n)	(o)	(p)	(q)	(r)
		01 35 26.05 20	License Certificates	1.9														
			License Certificates	1.9														
			Contractor Safety Self-Evaluation	1.4	G													
			Checklist															
			Certificate of Compliance	1.6.3.2														
			Machinery & Mechanized	3.5.1														
			Equipment Certification Form															
		01 45 00.05 20	SD-01 Preconstruction Submittals															
			Design Quality Control (DQC)	1.3.3	G													
			Plan															
			Construction Quality Control	1.3.3	G													
			(CQC) Plan															
			Commissioning Plan	1.3.4	G													
			SD-05 Design Data															
			Design Quality Control	1.4.2	G													
			Documentation															
			SD-07 Certificates															
			Preliminary Inspections and Final	1.4.4.1	G													
			Acceptance Testing															
			Final Life Safety/Fire Protection	1.4.4.1	G													
			Certification															
			IBC Special Inspections	1.4.4.2	G													
			Certification															
			SD-11 Closeout Submittals															
			Summary Commissioning Report	1.3.5	G													
		01 50 00.05 20	SD-01 Preconstruction Submittals															

SUBMITTAL REGISTER

CONTRACT NO.

TITLE AND LOCATION
Academic Instruction Facility, TECOM Schools

CONTRACTOR

ACTIVITY NO	TRANSMITTAL NO	SPEC SECT	DESCRIPTION ITEM SUBMITTED	PARAGRAPH #	CLASSIFICATION	GOVT OR A/E REVWR	CONTRACTOR: SCHEDULE DATES			CONTRACTOR ACTION			APPROVING AUTHORITY					
							SUBMIT	APPROVAL NEEDED BY	MATERIAL NEEDED BY	ACTION CODE	DATE OF ACTION	DATE FWD TO APPR AUTH/ DATE RCD FROM CONTR	DATE FWD TO OTHER REVIEWER	DATE RCD FROM OTH REVIEWER	ACTION CODE	DATE OF ACTION	MAILED TO CONTR/ DATE RCD FRM APPR AUTH	REMARKS
(a)	(b)	(c)	(d)	(e)	(f)		(g)	(h)	(i)	(j)	(k)	(l)	(m)	(n)	(o)	(p)	(q)	(r)
		01 50 00.05 20	Traffic control plan	1.9.1.1	G													
			Construction site plan	1.4	G													
			SD-03 Product Data															
			Backflow preventers	2.1														
			SD-06 Test Reports															
			Backflow Preventer Tests	3.3	G													
			SD-07 Certificates															
			Backflow Tester Certification	1.7														
		01 57 19.00 20	SD-01 Preconstruction Submittals															
			Preconstruction Survey	1.5.1	G													
			Solid Waste Management Plan	3.4	G													
			and Permit															
			Regulatory Notifications	1.5.2	G													
			Environmental Management Plan	3.1	G													
			Storm Water Pollution Prevention	3.2.2.1	G													
			Plan															
			Storm Water Pollution Prevention	3.2.2.1	G													
			Plan															
			Storm Water Notice of Intent (for	3.2.2.1	G													
			NPDES coverage under the															
			general permit for construction															
			activities)															
			Dirt and Dust Control Plan	3.14.1														
			Contractor Hazardous Material	3.6	G													
			Inventory Log															
			SD-06 Test Reports															

SUBMITTAL REGISTER

CONTRACT NO.

TITLE AND LOCATION
Academic Instruction Facility, TECOM Schools

CONTRACTOR

ACTIVITY NO	TRANSMITTAL NO	SPEC SECT	DESCRIPTION ITEM SUBMITTED	PARAGRAPH #	CLASSIFICATION	GOVT OR A/E REVWR	CONTRACTOR: SCHEDULE DATES			CONTRACTOR ACTION			APPROVING AUTHORITY					
							SUBMIT	APPROVAL NEEDED BY	MATERIAL NEEDED BY	ACTION CODE	DATE OF ACTION	DATE FWD TO APPR AUTH/ DATE RCD FROM CONTR	DATE FWD TO OTHER REVIEWER	DATE RCD FROM OTH REVIEWER	ACTION CODE	DATE OF ACTION	MAILED TO CONTR/ DATE RCD FRM APPR AUTH	REMARKS
(a)	(b)	(c)	(d)	(e)	(f)		(g)	(h)	(i)	(j)	(k)	(l)	(m)	(n)	(o)	(p)	(q)	(r)
		01 57 19.00 20	Laboratory Analysis	3.5														
			Laboratory Analysis	3.13.2.2														
			Laboratory Analysis	3.15.2														
			Disposal Requirements	3.15.2														
			Erosion and Sediment Control	3.2.2														
			Inspection Reports															
			Storm Water Inspection Reports	3.2.2														
			for General Permit															
			Contractor 40 CFR employee	1.5.5														
			training records															
			Solid Waste Management Report	3.4.1	G													
			SD-11 Closeout Submittals															
			Storm Water Pollution Prevention	3.2.2.2	G													
			Plan compliance notebook															
			Waste Determination	3.5														
			Documentation															
			Disposal Documentation for	3.6.1														
			Hazardous and Regulated Waste															
			Contractor 40 CFR Employee	1.5.5														
			Training Records															
			Solid Waste Management Permit	3.4														
			Solid Waste Management Report	3.4.1														
			Contractor Hazardous Material	3.6	G													
			Inventory Log															
			Hazardous Waste/Debris	3.13.2														
			Management															

SUBMITTAL REGISTER

CONTRACT NO.

TITLE AND LOCATION
Academic Instruction Facility, TECOM Schools

CONTRACTOR

ACTIVITY NO	TRANSMITTAL NO	SPEC SECT	DESCRIPTION ITEM SUBMITTED	PARAGRAPH #	CLASSIFICATION	GOVT OR A/E REVWR	CONTRACTOR: SCHEDULE DATES			CONTRACTOR ACTION			APPROVING AUTHORITY					
							SUBMIT	APPROVAL NEEDED BY	MATERIAL NEEDED BY	ACTION CODE	DATE OF ACTION	DATE FWD TO APPR AUTH/ DATE RCD FROM CONTR	DATE FWD TO OTHER REVIEWER	DATE RCD FROM OTH REVIEWER	ACTION CODE	DATE OF ACTION	MAILED TO CONTR/ DATE RCD FRM APPR AUTH	REMARKS
(a)	(b)	(c)	(d)	(e)	(f)		(g)	(h)	(i)	(j)	(k)	(l)	(m)	(n)	(o)	(p)	(q)	(r)
		01 57 19.00 20	Regulatory Notifications	1.5.2														
		01 78 24.00 20	SD-07 Certificates															
			Qualifications of eOMSI Preparer	1.6	G													
			Qualifications of eOMSI Preparer	1.6	G													
			SD-10 Operation and Maintenance															
			Data															
			Training Plan	3.1.1	G													
			Training Plan	3.1.1	G													
			Training Plan	3.1.1	G													
			Training Outline	3.1.3	G													
			SD-11 Closeout Submittals															
			eOMSI, Preliminary Submittal	1.9.1	G													
			eOMSI, 100 percent, Prefinal	1.9.2	G													
			Submittal															
			eOMSI, Final Submittal	1.9.3	G													
			Training Video Recording	3.1.4	G													
			Validation of Training Completion	3.1.6	G													
		01 91 00.00 40	SD-01 Preconstruction Submittals															
			Commissioning Plan	2.2.1	G													
			Commissioning Schedule	2.2.1	G													
			SD-06 Test Reports															
			Functional Performance Testing	3.2.5	G													
			Results															
			Deficiency Report and Resolution	3.1	G													
			Record															
			SD-11 Closeout Submittals															

SUBMITTAL REGISTER

CONTRACT NO.

TITLE AND LOCATION
Academic Instruction Facility, TECOM Schools

CONTRACTOR

ACTIVITY NO	TRANSMITTAL NO	SPEC SECT	DESCRIPTION ITEM SUBMITTED	PARAGRAPH #	CLASSIFICATION	GOVT OR A/E REVWR	CONTRACTOR: SCHEDULE DATES			CONTRACTOR ACTION			APPROVING AUTHORITY					
							SUBMIT	APPROVAL NEEDED BY	MATERIAL NEEDED BY	ACTION CODE	DATE OF ACTION	DATE FWD TO APPR AUTH/ DATE RCD FROM CONTR	DATE FWD TO OTHER REVIEWER	DATE RCD FROM OTH REVIEWER	ACTION CODE	DATE OF ACTION	MAILED TO CONTR/ DATE RCD FRM APPR AUTH	REMARKS
(a)	(b)	(c)	(d)	(e)	(f)		(g)	(h)	(i)	(j)	(k)	(l)	(m)	(n)	(o)	(p)	(q)	(r)
		01 91 00.00 40	Final Commissioning Report	3.1	G													
			LEED™ Documentation	3.4	G													
		23 08 00.00 10	SD-02 Shop Drawings															
			Commissioning Plan	1.5.2.2	G													
			SD-03 Product Data															
			Pre-Functional Performance Test	3.2.1	G													
			Checklists															
			Functional Performance Tests	3.2.2	G													
			SD-06 Test Reports															
			Commissioning Report	3.3	G													
			SD-07 Certificates															
			Commissioning Firm	1.5.1	G													
			Commissioning Agent	1.5.2	G													

THIS PAGE HAS BEEN INTENTIONALLY LEFT BLANK

SECTION 01 33 29.00 20

SUSTAINABLE REQUIREMENTS
08/13

PART 1 GENERAL

1.1 REFERENCES

The publications listed below form a part of this specification to the extent referenced. The publications are referred to within the text by the basic designation only.

U.S. DEPARTMENT OF ENERGY (DOE)

ISWG Guiding Principles	(2008) High Performance and Sustainable Buildings Guidance

U.S. GREEN BUILDING COUNCIL (USGBC)

LEED NC	(2009) Leadership in Energy and Environmental Design(tm) New Construction Rating System

1.2 SUBMITTALS

Government approval is required for submittals with a "G" designation; submittals not having a "G" designation are for Contractor Quality Control approval. The following shall be submitted in accordance with Section 01 33 00.05 20 CONSTRUCTION SUBMITTAL PROCEDURES:

SD-01 Preconstruction Submittals

Preliminary Sustainability Notebook Submittal

Preliminary High Performance and Sustainable Building Checklist

SD-07 Certificates

Third Party Certification (TPC)

SD-11 Closeout Submittals

Final Sustainability Notebook Submittal

Final High Performance and Sustainable Building (HPSB/NSEDRC) Checklist

Amended Final Sustainability Notebook Submittal

Third Party Certification Plaque and Certificates

1.3 GUIDING PRINCIPLES VALIDATION (GPV)

Provide construction related sustainable documentation to verify achievement of ISWG Guiding Principles Validation (GPV) and completion of

High Performance Sustainable Building (HPSB) Checklist. (This is the same checklist called NAVFAC Sustainable Energy Data Record Card (NSEDRC) items in Attachment 1).

Provide the following for GPV:

a. A completed HPSB/NSEDRC Checklist, using the HPSB/NSEDRC Checklist at Attachment 1. Further definitions and requirements are provided in paragraph HPSB/NSEDRC CHECKLIST.

b. Government approval of any changes to the HPSB/NSEDRC Checklist from the Contracting Officer at the Preconstruction Conference. Contracting Officer's approval establishes identified ISWG Guiding Principles Requirements as the project's sustainability goals.

No variations or substitutions to the sustainability requirements are allowed without written consent from the Contracting Officer. Immediately bring to the attention of the Contracting Officer any changes that impact meeting the approved ISWG Guiding Principles Requirements for this project and demonstrate that change will not incur additional construction cost or increase the life cycle cost.

c. Completion of all work required to incorporate the applicable ISWG Guiding Principles Requirements indicated on the HPSB/NSEDRC Checklist and in this contract.

d. Provision of construction related documentation to maintain an up-to-date Sustainability Notebook. Supplement construction related documentation containing the following components;

(1) HPSB/NSEDRC Checklist

(2) Sustainability Action Plan

(3) Documentation illustrating Guiding Principle Requirements compliance

(4) Commissioning Plan and Reports

1.3.1 Sustainability Action Plan

Include the following information in the Sustainability Action Plan:

a. Contractor confirmation to achieve each construction relate GP requirement.

b. For each designated construction related ISWG Guiding Principles Requirements that is not achieved, provide narrative explaining how mission, activity, or lack of funded scope for mandatory requirements precludes achieving specific sustainability requirement or goal. Provide analysis of particular requirement and level to which project is able to comply.

c. Name and contact information for: Contractor's Sustainable POC and other sustainability professional on the Contractor's Staff responsible for ensuring sustainability goals are accomplished and documentation is assembled.

1.3.2 Responsibilities

Contractor is responsible for all costs associated with constructing and demonstrating that project complies with approved ISWG Guiding Principles Requirements.

1.3.3 Calculations

Provide calculations, product data, and certifications required in this section to demonstrate compliance with the ISWG Guiding Principles Requirements.

1.3.4 Third Party Certification (TPC)

Contractor is responsible for achieving Third Party Certification (TPC) equivalent to USGBC LEED Silver Certification. The certification must come from USGBC or Government approved equivalent TPC organization. An alternative TPC organization must demonstrate equivalency and provide explanation for Government consideration, prior to use on the project. Third Party Certification is met when Government receives TPC organization certificate and plaque.

The TPC Online management will be the responsibility of the Contractor, and he must assume full responsibility for management and obtaining Final Certification.

The TPC Certification requires the following:

a. Provide the Final TPC Checklist that completes the requirements of the TPC Checklist attached to this specification as Attachment 2.

b. Obtain approval of the Final TPC Checklist from the Contracting Officer at the Pre-Construction Conference.

   No variations or substitutions to the sustainability requirements are allowed without written consent from the Contracting Officer. Immediately bring to the attention of the Contracting Officer any project changes that impact meeting the approved TPC Requirements for this project. Demonstrate that change will not: incur additional construction cost; increase the life cycle cost; impact previously approved design review credits; or impact required TPC certification level.

c. Complete all work required to incorporate the applicable TPC Requirements.

d. Maintain the construction related information, and provide replacement pages, in the Sustainability Notebook pertaining to additions and changes to the approved sustainable requirements. The Sustainability Notebook is in electronic format and is explained in paragraph SUSTAINABLE NOTEBOOK. The Sustainable Notebook contains the following components in addition to the GPV components above:

   (1) TPC Checklist

   (2) Completed TPC Online forms for each identified prerequisite and credit

(3) Copy of all correspondence with the TPC organization

(4) Documentation illustrating compliance with TPC requirements

(5) TPC Award Certificate

(6) Commissioning Plan

e. Include the following information in the Sustainable Action Plan. Provide this TPC information in addition to the GPV Action Plan items above:

(1) Contractor confirmation to achieve each TPC requirement.

(2) For each required TPC credit that is attempted but not achieved, provide narrative explaining how mission, activity, or lack of funded scope for TPC pre-requisites or mandatory credits precludes achieving specific sustainability requirement or goal. Provide analysis of particular requirement and level to which project is able to comply.

(3) Name and contact information for: Contractor's Sustainable POC and other names of sustainability professionals on the Contractor's Staff responsible for ensuring TPC sustainability goals are accomplished and documentation is assembled

(4) Provide the plan and schedule for performance testing, data collection, and commissioning to take place during first year of facility usage.

f. Contractor is responsible for all costs associated with constructing and demonstrating that project complies with approved TPC requirements, including but not limited to:

(1) Final TPC review, certification and plaque fees

(2) Online (or offline with secure facilities) TPC management and documentation.

(3) Obtaining TPC certification based on Government-approved sustainability goals.

(4) Construction work required to incorporate TPC prerequisites and credits.

(5) Submittals required to demonstrate compliance with Government approved TPC checklists.

g. Provide all calculations, product data, and certifications required in this specification to demonstrate compliance with the TPC Requirements.

h. Provide all online (or offline, with secure facilities) TPC management and documentation.

i. Provide all online (or offline, with secure facilities) TPC management and documentation.

j. Provide TPC Plaque and Certificates. Use format below to create the Plaque, Certificate and Letter of Congratulations. Forward to parties

designated by Contracting Officer:

(1) Plaque:

Name: Final Building Name. If unknown, provide Form DD1391 Project Name.

(2) Certificate:

Project Title, first line: P-(X); Form DD1391 Project Name).

Project Title, second line: Building #; Final Building Name (if different from Project Name.)

(3) Letter Congratulations:

Address letter to Facility's Installation commander Name. Address the letter to an individual person.

1.4 SUSTAINABLITY SUBMITTALS REQUIREMENTS

Provide documentation in the Sustainability Notebook and the HPSB/NSEDRC Checklist to indicate compliance with the sustainability requirements of the project.

1.4.1 SUSTAINABILITY NOTEBOOK

Provide and maintain a comprehensive Sustainability Notebook to document compliance with the sustainability requirements identified in the approved HPSB/NSEDRC and TPC Checklists.Sustainability Notebook must contain all required data to support full compliance with the ISWG Guiding Principles Requirements and TPC requirements. Sustainability Notebook is in the form of an Adobe PDF file; bookmarked at each ISWG Guiding Principles Requirement, TPC requirement, and sub-bookmarked at each document. Match format to ISWG Guiding Principles numbering system indicated herein. Maintain up to date information, spreadsheets, templates, etc. with each current submittals. For TPC projects, provide a second Table of contents using TPC numbering system. Locate documentation unique to TPC here. Where TPC documentation would repeat GP documentation, insert note referring reviewer to GP documentation.

Contracting Officer may deduct from the monthly progress payment accordingly if Sustainability Notebook information is not current, until information is updated and on track per project goals.

1.4.1.1 Sustainability Notebook Submittal Schedule

Provide Sustainability Notebook Submittals at the following milestones of the project:

a. Preliminary Sustainability Notebook Submittal
Submit preliminary Sustainability Notebook for approval at the Pre-construction conference.

b. Construction Progress Meetings. Update GP documentation in the Sustainability Notebook for each meeting.

c. Final Sustainability Notebook Submittal

Submit updated Sustainability Notebook within 60 days after the Beneficial Occupancy Date (BOD). Final progress payment retainage may be held by Contracting Officer until Final Sustainable construction phase documentation is complete. Submit three (3) electronic copies of the Final Sustainability Notebook on DVDs to the Government.

d. Amended Final Sustainability Notebook Submittal

Amend and resubmit the Final Sustainability Notebook to include commissioning, testing and balancing, and collection of performance requirements. Submit three (3) final electronic copies of the Amended Final Sustainability Notebook Submittal on DVDs to the Government no longer than 30 days after the GP, TPC, and Cx designated data collection period.

1.4.2 HIGH PERFORMANCE SUSTAINABLE BUILDING (HPSB/NSEDRC) CHECKLIST

Provide construction documentation that provides proof of and supports compliance with the completed HBSP/NSEDRC Checklist.

1.4.2.1 HPSB/NSEDRC Checklist Submittal Schedule

Submit an updated copy of the HPSB/NSEDRC Checklist in the Sustainability Notebook.

a. Preliminary High Performance and Sustainable Building Checklist (HPSB/NSEDRC) at the Pre-construction meeting.

b. Final High Performance and Sustainable Building (HPSB/NSEDRC) Checklist not less than 60 days after BOD.

The Checklist form is found at the following link;
http://www.wbdg.org/pdfs/navfac_sustainable_energy_data_record_card.pdf

1.5 DOCUMENTATION REQUIREMENTS

Where the following Guiding Principle Requirements are applicable to the Third Party Certification (TPC) project, and have a corresponding LEED requirement cited, the LEED credit is mandatory for TPC Certification. Documentation used to demonstrate TPC compliance may be used to demonstrate GP compliance.

Incorporate each of the following ISWG Guiding Principles Requirements into project construction; and provide documentation that proves compliance with each listed requirement. Items below are organized according to the ISWG Guiding Principles. Note that the ISWG Guiding Principles use Roman numerals to denote categories of requirements. The below list adds additional enumeration to further break down the ISWG Guiding Principles into the ISWG Guiding Principles Requirements. Where a Guiding Principle Requirement corresponds with a LEED NC 2009 prerequisite or credit, a LEED cross-reference is cited next to the ISWG Guiding Principles enumeration. Refer to TPC reference manual for reporting requirements.

1.5.1 Commissioning

GP Denotation - I.b.; LEED - EAp1 and LEED - EAc3

Work with the Government's CxA to achieve requirements of the Commissioning (Cx) plan and other construction document requirements at each stage of commissioning. Maintain up-to-date records of commissioning activities in the Sustainable Notebook.

1.5.2 Energy Efficient Equipment

GP Denotation - II.a.2.

Provide only energy-using equipment that is Energy Star rated, or has the Federal Energy Management Program (FEMP) recommended efficiency. Where Energy Star or FEMP recommendations have not been established, provide equipment with efficiency in the top 25 percent for the type of equipment procured. Provide only energy using equipment that meets FEMP requirements for low standby power consumption. Energy efficient equipment can be found at: http://www1.eere.energy.gov/femp/ and http://www.energystar.gov/.

Provide the following documentation:

Proof that equipment is energy efficient and complies with the cited requirements.

1.5.3 Benchmarking

GP Denotation - II.e.1.

Provide report of baseline data with the energy design targets.

Provide the following documentation:

Prefinal Performance Report with data collected from the first 60 days of operation of the facility after Beneficial Occupancy Date (BOD). Submit this information with the Final Sustainability Notebook Submittal.

1.5.4 Reduce Volatile Organic Compounds (VOC)

GP Denotation - IV.d.; LEED - IEQc4.1, IEQc4.2, IEQ,4.3, IEQc4.4, IEQc4.5 and IEQc 4.6

Provide materials and products with ingredients, components and emissions that meet the volatile organic compound levels cited in UFC 1-200-02, "High Performance and Sustainable Building Requirements". Products include adhesives, sealants, paints, coatings, carpet and flooring systems, wood panel products, furnishings, walls, and ceilings.

Provide the following documentation:

a. Documentation showing that materials do not exceed maximum VOC emissions of cited standards. Use VOC averaging to assure maximum paint and coating performance on painted items that are subject to human contact or harsh environmental conditions.

b. Documentation showing that flooring materials comply with VOC emissions of cited standards.

c. Documentation showing that composite wood and agrifiber products and associated laminating adhesives contain no added urea-formaldehyde.

d. Documentation showing that furniture and seating is third-party

certified.

e. Documentation showing that all gypsum board, insulation, acoustical ceiling systems and wall coverings installed in building interior meet cited standards.

1.5.5 Indoor Air Quality During Construction

GP Denotation - IV.e.; LEED - IEQc3.1 and IEQc3.2

Prior to construction, create indoor air quality plan. Implement IAQ plan during construction and flush building air before occupancy.

Provide the following documentation:

IAQ management plan for the construction and preoccupancy phases of the building that has been developed and implemented in accordance with Sheet Metal and Air Conditioning Contractor's National Association (SMACNA) Indoor Air Quality Guidelines for Occupied Buildings Under Construction 2007.

Provide required documentation showing that after construction ends and prior to occupancy, new HVAC filters were installed, and building air was flushed out a minimum of 72-hours with maximum outdoor air consistent with achieving relative humidity no greater than 60 percent, and indoor air temperature maintained at minimum 60 degrees Fahrenheit.

1.5.6 Recycled Content

Denotation - Va; LEED - MRc4

Provide materials on this project with aggregated total recycled content greater than 10 percent

Provide the following documentation:

a. Documentation showing total amount of recycled content contained in building materials as a percentage of total cost of all building materials on the project (mechanical, electrical, and plumbing components, and specialty items such as elevators excluded).

b. Substitutions: In case of conflict between project's recycled content goals and individual technical section requirements, Contractor may submit for Government approval, proposed alternative products or systems that provide equivalent performance and appearance and have greater contribution to project recycled content requirements. For all such proposed substitutions, submit with the Sustainability Action Plan accompanied by product data demonstrating equivalence.

1.5.7 Bio-Based Products

GP Denotation - V.b.1; LEED - MRc6

Use bio-based products. Bio-based is defined as commercial or industrial products (other than food or feed) that are composed in whole, or in significant part, of biological products, renewable agricultural materials (including plant, animal, and marine materials), or forestry materials. Refer to www.biopreferred.gov.

Provide the following documentation:

Documentation to indicate bio-based products have been used.

1.5.8 Landfill Disposal

GP Denotation - V.d.1; LEED - MRc2

Divert 60 percent or more of construction waste from landfill disposal.

Provide the following documentation:

Documentation showing total amount of construction debris diverted from landfill as a percentage of all construction debris on the project.

Include project's Construction Waste Management Plan and all dumpster haul tickets.

1.5.9 Ozone Depleting Substances

GP Denotation - V.e; LEED - EAp3, and LEED - EAc4

Eliminate the use of ozone depleting substances during and after construction where alternative environmentally preferable products are available and in accordance with either the Montreal Protocol and Title VI of the Clean Air Act Amendment of 1990 or equivalent overall air quality benefits that take into account lifecycle impacts.

Provide the following documentation:

a. MSDS sheets for all refrigerants provided

b. Products that meet the criteria of U.S. EPA Significant New Alternatives Policy, available at http://www.epa.gov/ozone/snap/index.html.

1.5.10 Validation and Certification Restrictions

The purchase of renewable energy credits (RECs) to meet project sustainable goals is prohibited.

PART 2 PRODUCTS

Not used.

PART 3 EXECUTION

3.1 SUSTAINABILITY COORDINATION

3.1.1 Coordinating Sustainability Documentation Progress

Provide sustainability focus and coordination at the following meetings to achieve sustainability goals. Contractor's designated TPC accredited sustainability professional responsible for GP and TPC documentation must participate in the following meetings to coordinate documentation completion.

a. Pre-Construction Conference: Discuss the following: TPC and

HPSB/NSEDRC Checklists, Sustainability Action Plan, Construction submittal requirements and schedule, individuals responsible for achieving each Guiding Principle Requirement and TPC prerequisite and credit.

b. Construction Progress Meetings: Review GP and TPC sustainability requirements with project team including contractor and sub-contractor representatives. Demonstrate GP and TPC documentation is being collected and updated to the Sustainability Notebook and TPC Online tool.

(1) Project Closeout Meetings (Begin closeout meetings no later than 75 percent construction complete): Review Sustainability Notebook, and TPC Online submission for completeness and identify any outstanding issues relating to final documentation requirements.

(2) Final Sustainability Notebook Review

3.2 SUSTAINABILITY AWARD

Finalize the sustainability certification process and obtain the TPC Certification Plaque and Certificates, indicating completion of the projects sustainability goals.

3.2.1 Third Party Certification Plaque and Certificates

Obtain and install plaque and provide one original framed copy of the certificate. Mount certificates in 1 inch deep metal frames, with double matt, and wire hangers. Obtain 10 additional certificates, and deliver to Contractor Officer, unless otherwise instructed. Hang the Plaque in a prominent interior location approved by the Contracting Officer.

-- End of Section --

SECTION 01 35 13.05 20

SPECIAL PROJECT PROCEDURES FOR DESIGN-BUILD
11/07

PART 1 GENERAL

Not used.

PART 2 PRODUCTS

Not used.

PART 3 EXECUTION

Not used.

-- End of Section --

THIS PAGE HAS BEEN INTENTIONALLY LEFT BLANK

SECTION 01 35 26.05 20

GOVERNMENT SAFETY REQUIREMENTS FOR DESIGN-BUILD
04/13

PART 1 GENERAL

1.1 REFERENCES

The publications listed below form a part of this specification to the extent referenced. The publications are referred to within the text by the basic designation only.

AMERICAN NATIONAL STANDARDS INSTITUTE (ANSI)

ANSI/HFES 100
(2007) Human Factors Engineering of Computer Workstations

AMERICAN SOCIETY OF SAFETY ENGINEERS (ASSE/SAFE)

ASSE/SAFE A10.32
(2004) Fall Protection systems for Construction and Demolition Operations

ASSE/SAFE A10.34
(2001; R 2005) Protection of the Public on or Adjacent to Construction Sites

ASSE/SAFE A1264.1
(2007) Safety Requirements for Workplace Walking/Working Surfaces and Their Access; Workplace Floor and Wall Openings; Stairs and Guardrails Systems

ASSE/SAFE Z359.0
(2007) Definitions and Nomenclature Used for Fall Protection and Fall Arrest

ASSE/SAFE Z359.1
(2007) Safety Requirements for Personal Fall Arrest System, Subsystems and Components

ASSE/SAFE Z359.2
(2007) Minimum Requirements for a Comprehensive Managed Fall Protection Program

ASSE/SAFE Z359.3
(2007) Safety Requirements for Positioning and Travel Restraint Systems

ASSE/SAFE Z359.4
(2007) Safety Requirements for Assisted-Rescue and Self-Rescue Systems,

Subsystems and Components

ASME INTERNATIONAL (ASME)

ASME B30.22
(2010) Articulating Boom Cranes

ASME B30.3
(2009) Tower Cranes

ASME B30.5
(2007) Mobile and Locomotive Cranes

ASME B30.8
(2010) Floating Cranes and Floating Derricks

DEPARTMENT OF DEFENSE (DoD)

MIL-STD-1472F
(1999) Military Standard, Human Engineering Design Criteria for Military Systems, Equipment and Facilities

DoD-HDBK 743A
(1991) Anthropometry of US Military Personnel

NATIONAL AERONAUTICS AND SPACE ADMINISTRATION (NASA)

NASA-STD 8719.12
(2010) Safety Standard for Explosives, Propellants, and Pyrotechnics

NATIONAL FIRE PROTECTION ASSOCIATION (NFPA)

NFPA 1
(2012) Fire Code

NFPA 10
(2010) Standard for Portable Fire Extinguishers

NFPA 241
(2009) Standard for Safeguarding Construction, Alteration, and Demolition Operations

NFPA 306
(2009) Standard for Control of Gas Hazards on Vessels

NFPA 51B
(2009; TIA 09-1) Standard for Fire Prevention During Welding, Cutting, and Other Hot Work

NFPA 70
(2011; TIA 11-1; Errata 2011) National Electrical Code

NFPA 70E
(2012) Standard for Electrical Safety in the Workplace

U.S. ARMY CORPS OF ENGINEERS (USACE)

EM 385-1-1
(2008; Errata 1-2010; Changes 1-3 2010; Changes 4-6 2011) Safety and Health Requirements Manual

U.S. NATIONAL ARCHIVES AND RECORDS ADMINISTRATION (NARA)

10 CFR 20
Standards for Protection Against Radiation

29 CFR 1910
Occupational Safety and Health Standards

29 CFR 1910.146
Permit-required Confined Spaces

29 CFR 1910.147
Control of Hazardous Energy (Lock Out/ Tag Out)

29 CFR 1915
Confined and Enclosed Spaces and Other Dangerous Atmospheres in Shipyard Employment

29 CFR 1919
Gear Certification

29 CFR 1926
Safety and Health Regulations for Construction

29 CFR 1926.1400
Cranes & Derricks in Construction

29 CFR 1926.16
Rules of Construction

29 CFR 1926.21
Safety Training and Education

29 CFR 1926.450
Scaffolds

29 CFR 1926.500
Fall Protection

CPL 2.100
(1995) Application of the Permit-Required Confined Spaces (PRCS) Standards, 29 CFR 1910.146

U.S. NAVAL FACILITIES ENGINEERING COMMAND (NAVFAC)

NAVFAC P-307 (Dec 2009 with Change 1, Mar 2011, and Change 2, Aug 2011) Management of Weight Handling Equipment

1.2 SUBMITTALS

The use of a "G" following a submittal indicates that a Government approval action is required. Submit the following in accordance with Section 01 33 10.05 20 DESIGN SUBMITTAL PROCEDURES and Section 01 33 00.05 20 CONSTRUCTION SUBMITTAL PROCEDURES.

SD-01 Preconstruction Submittals

Accident Prevention Plan - Pre-Design Submittal; G

Accident Prevention Plan - Pre-Construction Submittal; G

Activity Hazard Analysis (AHA); G

Crane Critical Lift Plan; G

Proof of Qualifications for Crane Operators; G

SD-06 Test Reports

Accident Notifications

Submit reports as their incidence occurs, in accordance with the requirements of the paragraph entitled, "Accident Notifications."

Accident Reports

Submit reports as their incidence occurs, in accordance with the requirements of the paragraph entitled, "Accident Reports."

Crane Reports

Monthly Exposure Report

SD-07 Certificates

Confined Space Entry Permit

Hot Work Permit

License Certificates

Contractor Safety Self-Evaluation Checklist; G (Obtain copy from Contracting Officer)

Certificate of Compliance (Crane)

Submit one copy of each permit/certificate attached to each Daily Quality Control Report.

Machinery & Mechanized Equipment Certification Form

1.3 DEFINITIONS

a. Competent Person for Fall Protection. A person who is capable of identifying hazardous or dangerous conditions in the personal fall arrest system or any component thereof, as well as their application and use with related equipment, and has the authority to take prompt corrective measures to eliminate the hazards of falling.

b. High Visibility Accident. Any mishap which may generate publicity and/or high visibility.

c. Medical Treatment. Treatment administered by a physician or by registered professional personnel under the standing orders of a physician. Medical treatment does not include first aid treatment even through provided by a physician or registered personnel.

d. Operating Envelope. The area surrounding any crane. Inside this "envelope" is the crane, the operator, riggers and crane walkers, rigging gear between the hook and the load, the load and the crane's supporting structure (ground, rail, etc.).

e. Recordable Injuries or Illnesses. Any work-related injury or illness that results in:

(1) Death, regardless of the time between the injury and death, or the length of the illness;

(2) Days away from work (any time lost after day of injury/illness onset);

(3) Restricted work;

(4) Transfer to another job;

(5) Medical treatment beyond first aid;

(6) Loss of consciousness; or

(7) A significant injury or illness diagnosed by a physician or other licensed health care professional, even if it did not result in (1) through (6) above.

f. "USACE" property and equipment specified in USACE EM 385-1-1 should be interpreted as Government property and equipment.

g. Weight Handling Equipment (WHE) Accident. A WHE accident occurs when any one or more of the sixeight elements in the operating envelope fails to perform correctly during operation, including operation during maintenance or testing resulting in personnel injury or death; material or equipment damage; dropped load; derailment; two-blocking; overload; and/or collision, including unplanned contact between the load, crane, and/or other objects. A dropped load, derailment, two-blocking, overload and collision are considered accidents even though no material damage or injury occurs. A component failure (e.g., motor burnout, gear tooth failure, bearing failure) is not considered an accident solely due to material or equipment damage unless the component failure results in damage to other components (e.g., dropped boom, dropped

load, roll over, etc.) Any mishap meeting the criteria described above shall be documented in both the Contractor Significant Incident Report (CSIR) and using the NAVFAC prescribed Navy Crane Center (NCC) form submitted within five days both as provided by the Contracting Officer. Comply with additional requirements and procedures for accidents in accordance with NAVFAC P-307, Section 12.

1.4 CONTRACTOR SAFETY SELF-EVALUATION CHECKLIST

Contracting Officer will provide a "Contractor Safety Self-Evaluation checklist" to the Contractor at the pre-construction conference. Complete the checklist monthly and submit with each request for payment voucher. An acceptable score of 90 or greater is required. Failure to submit the completed safety self-evaluation checklist or achieve a score of at least 90 may result in retention of up to 10 percent of the voucher. Additionally, provide a Monthly Exposure Report and attach to the monthly billing request. This report is a compilation of employee-hours worked each month for all site workers, both prime and subcontractor. Failure to submit the report may result in retention of up to 10 percent of the voucher. The Contracting Officer will submit a copy of the Contractor Safety Self-Evaluation and Monthly Exposure Report to the local safety and occupational health office.

1.5 REGULATORY REQUIREMENTS

In addition to the detailed requirements included in the provisions of this contract, work performed shall comply with USACE EM 385-1-1, and the following federal, state, and local, laws, ordinances, criteria, rules and regulations of NAVFACENGCOM, Marine Corps Base Quantico, City of Quantico, and the Commonwealth of Virginia. Submit matters of interpretation of standards to the appropriate administrative agency for resolution before starting work. Where the requirements of this specification, applicable laws, criteria, ordinances, regulations, and referenced documents vary, the most stringent requirements shall apply.

1.6 SITE QUALIFICATIONS, DUTIES, PLAN, AND MEETINGS

1.6.1 Personnel Qualifications and Training Requirements

1.6.1.1 Site Safety and Health Officer (SSHO)

The SSHO must meet the requirements of EM 385-1-1 section 1 and ensure that the requirements of 29 CFR 1926.16 are met for the project. The Contractor shall provide a Safety oversight team that includes a minimum of one (1) person at each project site to function as the Safety and Health Officer (SSHO). The SSHO or an equally-qualified Designated Representative/alternate shall be at the work site at all times to implement and administer the Contractor's safety program and government-accepted Accident Prevention Plan. The SSHO's training, experience, and qualifications shall be as required by EM 385-1-1 paragraph 01.A.17, entitled SITE SAFETY AND HEALTH OFFICER (SSHO), and all associated sub-paragraphs.

A Competent Person shall be provided for all of the hazards identified in the Contractor's Safety and Health Program in accordance with the accepted Accident Prevention Plan, and shall be on-site at all times when the work that presents the hazards associated with their professional expertise is being performed. Provide the credentials of the Competent Persons(s) to the

Contracting Officer for acceptance in consultation with the Safety Office.

The Contractor Quality Control Person cannot be the SSHO on this project, even though the QC has safety inspection responsibilities as part of the QC duties.

1.6.1.2 Additional Site Safety and Health Officer (SSHO) Requirements and Duties

The SSHO shall have completed the "40 Hour Construction Safety Hazard Awareness Training Course".

The training requirements for the SSHO must include the successful completion of the course entitled "40 Hour Construction Safety Hazard Awareness Training Course for Contractors". If the SSHO does not have a current certification, they shall obtain the course certification within sixty (60) calendar days from award.

1.6.1.2.1 Construction Safety Hazard Awareness Training Course

The training requirements for the SSHO must include the successful completion of the course entitled "40 Hour Construction Safety Hazard Awareness Training Course for Contractors". If the SSHO does not have a current certification, they shall obtain the course certification within sixty (60) calendar days from award.

1.6.1.2.2 Qualified Trainer for Construction Safety Hazard Awareness Training Course

Qualified Trainer Requirements for 40 Hour Construction Safety Hazard Awareness Training Course for Contractors and 16 hours of classroom training on the requirements of the latest version of the EM 385-1-1: Completed the following courses:

a. OSHA 510, Occupational Safety and Health Standards for Construction

b. OSHA 500, Trainer Course in OSHA Standards for Construction

c. OSHA 3095, Electrical Standards

d. OSHA 7115, Lockout/Tagout

e. OSHA 3110, Fall Arrest Systems

f. OSHA 2264, Permit-Required Confined Space Entry

g. OSHA 3010, Excavation, Trenching and Soil Mechanics

h. Scaffolds in accordance with 29 CFR 1926.450, Subpart L

i. NAVFAC 40-hour Construction Safety Hazard Awareness Training

Responsibilities of Authorized Trainers:

a. Prepare class presentations that cover construction-related safety requirements and includes topics covered in the NAVFAC Construction Safety Hazard Awareness Course for Contractors.

b. Ensure that all attendees attend all sessions by using a class roster

signed daily by each attendee. Maintain copies of the roster for at least five (5) years. This is a certification class and must be attended 100 percent. In cases of emergency where an attendee cannot make it to a session, the attendee can make it up in another class session for the same subject.

c. Update training course materials whenever an update of the EM 385-1-1becomes available.

d. Provide a written exam of at least 50 questions. Students shall be required to answer 80 percent correctly to pass. Sample questions are found on the NAVFAC website at https://portal.navfac.navy.mil/portal/page/portal/navfac/navfac_ww_pp/navfac_hq_pp/n Copies of test and student answers shall be retained for five (5) years and will be made available for inspection by the NAVFAC Pacific, Site Safety and Health Manager upon request.

1.6.1.3 Crane Operators

Meet the crane operator's requirements in USACE EM 385-1-1. In addition, for mobile cranes with Original Equipment Manufacturer (OEM) rated capacitates of 50,000 pounds or greater, designate crane operators as qualified by a source that qualifies crane operators (i.e., union, a government agency, or an organization that tests and qualifies crane operators). Provide proof of current qualification. In addition, the Contractor shall comply with Contractor Operated Crane Requirements included in the latest revision of document NAVFAC P-307 Section 1.7.2 "Contractor Operated Cranes," and Appendix P, Figure P-1 and with 29 CFR 1926, Subpart CC.

1.6.1.4 Competent Person for Confined Space Entry

Provide a competent person for confined space meeting the definition and requirements of EM 385-1-1. If work involves marine operations that handle combustible or hazardous materials, this person shall have the ability to understand and follow through on the air sampling, PPE, and instructions of a Marine Chemist, Coast Guard authorized persons, or Certified Industrial Hygienist. All confined and enclosed space work shall comply with NFPA 306, OSHA 29 CFR 1915, Subpart B, "Confined and Enclosed Spaces and Other Dangerous Atmospheres in Shipyard Employment" or as applicable, OSHA 29 CFR 1910.147 for general industry.

1.6.2 Personnel Duties

1.6.2.1 Site Safety and Health Officer (SSHO)

Collect and maintain certified EMR ratings and DART rates for all subcontractors on the project and make them available to the Government at the Government's request.

In addition to duties required in EM 385-1-1, perform the following duties:

a. Conduct daily safety and health inspections and maintain a written log which includes area/operation inspected, date of inspection, identified hazards, recommended corrective actions, estimated and actual dates of corrections. Attach safety inspection logs to the Contractors' daily quality control report.

b. Conduct mishap investigations and complete required reports. Maintain

the OSHA Form 300 and Daily Production reports for prime and sub-contractors.

c. Maintain safety-related references applicable to the project, including those listed in the article "References." Maintain applicable equipment manufacturer's manuals.

d. Attend the pre-construction conference, pre-work meetings including preparatory inspection meeting, and periodic in-progress meetings.

e. Implement and enforce accepted APPS and AHAs.

f. Maintain a safety and health deficiency tracking system that monitors outstanding deficiencies until resolution. Post a list of unresolved safety and health deficiencies on the safety bulletin board.

g. Ensure sub-contractor compliance with safety and health requirements. Failure to perform the above duties will result in dismissal of the superintendent, QC Manager, and/or SSHO, and a project work stoppage. The project work stoppage will remain in effect pending approval of a suitable replacement.

h. Maintain a list of hazardous chemicals on site and their material safety data sheets.

i. Within one calendar day after commencement of work, erect a safety bulletin board at the job site. Where size, duration, or logistics of project do not facilitate a bulletin board, an alternative method, acceptable to the Contracting Officer, that is accessible and includes all mandatory information for employee and visitor review, shall be deemed as meeting the requirement for a bulletin board. Include and maintain information on safety bulletin board as required by EM 385-1-1, section 01.A.06. Additional items required to be posted include:

1) Confined space entry permit.

2) Hot work permit.

1.6.3 Safety Plans and Submissions

1.6.3.1 Accident Prevention Plan - Pre-Design Submittal

Provide a site-specific Accident Prevention Plan (APP) including Activity Hazard Analyses (AHA) in accordance with the US Army Corps of Engineers Safety and Health Manual EM-385-1-1 Appendix A, Sections 10 & 11 for the design team to follow during site visits and investigations. For subsequent visits, update the form if there are changes in the personnel who shall be attending, and/or the tasks to be performed. Submit the APP for review and acceptance by the Government at least 15 calendar days prior to the start of the design field work. Field work may not begin until the pre-design APP is accepted by the Contracting Officer.

If the design scope includes borings or other subsurface investigations, as part of the APP identify the type of field investigation and verification techniques, such as visual, Miss Utilities scanning and third party/subcontractor scanning, potholing, and/or hand digging within two feet of a known utility. Mark underground utilities before starting any ground-disturbing actions. Notify the contracting officer 15 days prior to

the start of soil borings or sub-surface investigations.

Prior to the start of construction incorporate the Pre-Design APP into the Pre-Construction APP so that one site specific APP exists for the project and submit to the Contracting Officer for acceptance

1.6.3.2 Accident Prevention Plan - Pre-Construction Submittal

Use a qualified person to prepare the written site-specific APP. Prepare the APP in accordance with the format and requirements of USACE EM 385-1-1 and as supplemented herein. Cover all paragraph and subparagraph elements in USACE EM 385-1-1, Appendix A, "Minimum Basic Outline for Accident Prevention Plan". Specific requirements for some of the APP elements are described below. The APP shall be job-specific and address any unusual or unique aspects of the project or activity for which it is written. The APP shall interface with the Contractor's overall safety and health program. Include any portions of the Contractor's overall safety and health program referenced in the APP in the applicable APP element and made site-specific. The Government considers the Prime Contractor to be the "controlling authority" for all work site safety and health of the subcontractors. Contractors are responsible for informing their subcontractors of the safety provisions under the terms of the contract and the penalties for noncompliance, coordinating the work to prevent one craft from interfering with or creating hazardous working conditions for other crafts, and inspecting subcontractor operations to ensure that accident prevention responsibilities are being carried out. The APP shall be signed by the person and firm (senior person) preparing the APP, the Contractor, the on-site superintendent, the designated site safety and health officer, the Contractor Quality control Manager, and any designated CSP and/or CIH.

Submit the APP to the Contracting Officer 15 calendar days prior to the date of the Prework conference for acceptance. Work cannot proceed without an accepted APP. Once accepted by the Contracting Officer, the APP and attachments will be enforced as part of the contract. Disregarding the provisions of this contract or the accepted APP will be cause for stopping of work, at the discretion of the Contracting Officer, until the matter has been rectified.

Once work begins, changes to the accepted APP shall be made with the knowledge and concurrence of the Contracting Officer, project superintendent, SSHO and quality control manager. Should any severe hazard exposure, i.e. imminent danger, become evident, stop work in the area, secure the area, and develop a plan to remove the exposure and control the hazard. Notify the Contracting Officer within 24 hours of discovery. Eliminate/remove the hazard. In the interim, take all necessary action to restore and maintain safe working conditions in order to safeguard onsite personnel, visitors, the public (as defined by ASSE/SAFE A10.34,) and the environment.

Copies of the accepted plan will be maintained at the Contracting Officer's office and at the job site. Continuously review and amend the APP, as necessary, throughout the life of the contract. Incorporate unusual or high-hazard activities not identified in the original APP as they are discovered.

In addition to the requirements outlined in USACE EM 385-1-1, the following is required:

a. Names and qualifications (resumes including education, training,

experience and certifications) of all site safety and health personnel designated to perform work on this project to include the designated site safety and health officer and other competent and qualified personnel to be used such as CSPs, CIHs, STSs, CHSTs. Specify the duties of each position.

b. Qualifications of competent and of qualified persons. As a minimum, designate and submit qualifications of competent persons for each of the following major areas: excavation; scaffolding; fall protection; hazardous energy; confined space; health hazard recognition, evaluation and control of chemical, physical and biological agents; personal protective equipment and clothing to include selection, use and maintenance.

c. Confined Space Entry Plan. Develop a confined and/or enclosed space entry plan in accordance with USACE EM 385-1-1, applicable OSHA standards 29 CFR 1910, 29 CFR 1915, and 29 CFR 1926, OSHA Directive 2.100, and any other federal, state and local regulatory requirements identified in this contract. Identify the qualified person's name and qualifications, training, and experience. Delineate the qualified person's authority to direct work stoppage in the event of hazardous conditions. Include procedure for rescue by contractor personnel and the coordination with emergency responders. (If there is no confined space work, include a statement that no confined space work exists and none will be created.)

d. Fall Protection and Prevention (FP&P) Program Documentation. The program documentation shall be site specific and address all fall hazards in the work place and during different phases of construction. Address how to protect and prevent workers from falling to lower levels when they are exposed to fall hazards above 1.8 m 6 feet. A qualified person for fall protection shall prepare and sign the program documentation. Include fall protection and prevention systems, equipment and methods employed for every phase of work, responsibilities, assisted rescue, self-rescue and evacuation procedures, training requirements, and monitoring methods. Revise the Fall Protection and Prevention Program documentation every six months for lengthy projects, reflecting any changes during the course of construction due to changes in personnel, equipment, systems or work habits. Keep and maintain the accepted Fall Protection and Prevention Program documentation at the job site for the duration of the project. Include the Fall Protection and Prevention Program documentation in the Accident Prevention Plan.

The FP&P Plan shall include a Rescue and Evacuation Plan in accordance with USACE EM 385-1-1, Section 21.M. The plan shall include a detailed discussion of the following: methods of rescue; methods of self-rescue; equipment used; training requirement; specialized training for the rescuers; procedures for requesting rescue and medical assistance; and transportation routes to a medical facility. Include the Rescue and Evacuation Plan in the Fall Protection and Prevention (FP&P) Plan, and as part of the Accident Prevention Plan (APP).

e. Weight Handling Equipment Certificate of Compliance. Provide a Certificate of Compliance for each crane when entering an activity under this contract (see Contracting Officer for a blank certificate). State within the certificate that the crane and rigging gear meet applicable OSHA regulations (with the Contractor citing which OSHA regulations are applicable, e.g., cranes used in construction demolition, or maintenance comply with 29 CFR 1926 and USACE EM

385-1-1. Certify on the Certificate of Compliance that the crane operator(s) is qualified and trained in the operation of the crane to be used. For cranes at DOD activities in foreign countries, certify that the crane and rigging gear conform to the appropriate host country safety standards. Also certify that all of its crane operators working on the DOD activity have been trained in the proper use of all safety devices (e.g., anti-two block devices). Post certifications on the crane.

f. Crane Critical Lift Plan. Prepare and sign weight handling critical lift plans for lifts over 75 percent of the capacity of the crane or hoist (or lifts over 50 percent of the capacity of a barge mounted mobile crane's hoists) at any radius of lift; lifts involving more than one crane or hoist; lifts of personnel; and lifts involving non-routine rigging or operation, sensitive equipment, or unusual safety risks. Submit 15 calendar days prior to on-site work and include the requirements of USACE EM 385-1-1, and the following:

(1) For lifts of personnel, demonstrate compliance with the requirements of 29 CFR 1926.1400.

(2) For barge mounted mobile cranes, barge stability calculations identifying barge list and trim based on anticipated loading; and load charts based on calculated list and trim. The amount of list and trim shall be within the crane manufacturer's requirements. Third Party Certification of Barge-Mounted Mobile Cranes Certify barge-mounted mobile cranes in accordance with 29 CFR 1919 by an OSHA accredited person.

g. Severe Storm Plan. In the event of a severe storm warning, the Contractor must:

(1). Secure outside equipment and materials and place materials that could be damaged in protected areas.

(2). Check surrounding area, including roof, for loose material, equipment, debris, and other objects that could be blown away or against existing facilities.

(3). Ensure that temporary erosion controls are adequate.

h. Excavation Plan. The safety and health aspects prepared in accordance with Section 31 00 00 EARTHWORK.

1.6.3.3 Activity Hazard Analysis (AHA)

The Activity Hazard Analysis (AHA) format shall be in accordance with USACE EM 385-1-1 and as provided by the Contracting Officer at the pre work meeting. Submit the AHA for review at least 15 calendar days prior to the start of each phase. Format subsequent AHAs as amendments to the APP. The analysis should be used during daily inspections to ensure the implementation and effectiveness of the activity's safety and health controls and reviewed with all employees involved in the work. The AHA list will be reviewed periodically (at least monthly) at the Contractor supervisory safety meeting and updated as necessary when procedures, scheduling, or hazards change. Develop the activity hazard analyses using the project schedule as the basis for the activities performed. Any activities listed on the project schedule will require an AHA. Competent persons required for phases involving such things as fall protection,

excavations, scaffold, and electrical work shall be identified. AHAs should be developed by the contractor, supplier, or subcontractor performing the work and provided to the prime contractor for review and submitted to the Contracting Officer for acceptance after prime contractor approval.

1.6.4 Meetings

1.6.4.1 Prework Conference

a. Contractor representatives who have a responsibility or significant role in accident prevention on the project shall attend the Prework conference. This includes the project superintendent, site safety and health officer (SSHO), quality control supervisor, or any other assigned safety and health professionals who participated in the development of the APP (including the Activity Hazard Analyses (AHAs) and special plans, programs, and procedures associated with it).

b. Discuss the details of the submitted APP to include incorporated plans, programs, procedures and a listing of anticipated AHAs that will be developed and implemented during the performance of the contract. This list of proposed AHAs will be reviewed at the conference and an agreement will be reached between the Contractor and the Contracting Officer's representative as to which phases will require an analysis. At a minimum all definable features of work are to have an AHA developed. In addition, establish a schedule for the preparation, submittal, review, and acceptance of AHAs to preclude project delays.

c. Deficiencies in the submitted APP will be brought to the attention of the Contractor and the Contractor shall revise the plan to correct deficiencies and re-submit for acceptance. Do not begin work until there is an accepted APP. A returned APP should be corrected prior to scheduling the Prework meeting.

1.6.4.2 Safety Meetings for Employees

Conduct and document meetings as required by EM 385-1-1. Attach minutes showing contract title, signatures of attendees and a list of topics discussed to the Contractors' daily production report.

1.6.5 EMERGENCY MEDICAL TREATMENT

Contractors will arrange for their own emergency medical treatment. Government has no responsibility to provide emergency medical treatment.

1.7 NOTIFICATIONS and REPORTS

1.7.1 Accident Notifications

a. Notify the Contracting Officer as soon as practical, but no more than four hours after any accident meeting the definition of Recordable Injuries or Illnesses or High Visibility Accidents, property damage equal to or greater than $2,000, or any weight handling equipment accident. Within notification include contractor name; contract title; type of contract; name of activity, installation or location where accident occurred; date and time of accident; names of personnel injured; extent of property damage, if any; extent of injury, if known, and brief description of accident (to include type of construction equipment used, PPE used, etc.). Preserve the conditions and evidence on the accident site until the Government investigation team arrives

on-site and Government investigation is conducted.

1.7.2 Accident Reports

a. Conduct an accident investigation for recordable injuries and illnesses, as defined in "Article - Definitions" property damage accidents resulting in at least $20,000 in damages, and near misses as defined in "Article - Definiations" to establish the root cause(s) of the accident, complete the applicable NAVFAC Contractor Incident Reporting System (CIRS) and electronically submit via the NAVFAC Enterprise Safety Applications Management System (ESAMS) The Contracting Officer will provide copies of any required or special forms.

b. Near Misses: Require the completion of the applicable NAVFAC Contractor Incident Reporting System (CIRS) and electronically submit via the NAVFAC Enterprise Safety Applications Management System (ESAMS).

c. Conduct an accident investigation for any weight handling equipment accident (including rigging gear accidents) to establish the root cause(s) of the accident, complete the WHE Accident Report (Crane and Rigging Gear) form and provide the report to the Contracting Officer within 30 calendar days of the accident. Do not proceed with crane operations until cause is determined and corrective actions have been implemented to the satisfaction of the contracting officer. The Contracting Officer will provide a blank copy of the accident report form.

1.7.3 Crane Reports

Submit crane inspection reports required in accordance with USACE EM 385-1-1,Appendix I and as specified herein with Daily Reports of Inspections.

1.8 HOT WORK

Prior to performing "Hot Work" (welding, cutting, etc.) or operating other flame-producing/spark producing devices, a written permit shall be requested from the Fire Division. CONTRACTORS ARE REQUIRED TO MEET ALL CRITERIA BEFORE A PERMIT IS ISSUED. It is mandatory to have a designated FIRE WATCH for any "Hot Work" done at this activity. The Fire Watch shall be trained in accordance with NFPA 51B and remain on-site for a minimum of 30 minutes after completion of the task or as specified on the hot work permit.

Obtain services from a NFPA Certified Marine Chemist for "HOT WORK" within or around flammable materials (such as fuel systems, welding/cutting on fuel pipes) or confined spaces (such as sewer wet wells, manholes, vaults, etc.) that have the potential for flammable or explosive atmospheres.

1.9 RADIATION SAFETY REQUIREMENTS

License Certificates for radiation materials and equipment shall be submitted to the Contracting Officer and Radiation Safety Office (RSO), and Contracting Oversight Technician (COT) for all specialized and licensed material and equipment that could cause fatal harm to construction personnel or to the construction project.

Workers shall be protected from radiation exposure in accordance with 10 CFR 20. Standards for Protection Against Radiation

License Certificates, employee training records, and Leak Test Reports for radiation materials and equipment shall be submitted to the Contracting Officer and Navy Radiation Safety Office (RSO), and Contracting Oversight Technician (COT) for all specialized and licensed material and equipment proposed for use on the construction project. Maintain on-site records whenever licensed radiological materials or ionizing equipment are on government property.

Protect workers from radiation exposure in accordance with 10 CFR 20. Standards for Protection against radiation, ensuring any personnel exposures are maintained As Low As Reasonably Achievable.

Submit a Radiography Operation Planning Work Sheet to Contracting Officer 14 days prior to commencement of operations involving radioactive materials or radiation generating devices. The Contracting Officer and COT will review this worksheet and submit questions and comments

Contractors must use primary dosimeters process by a National Voluntary Laboratory Accreditation Program (NVLAP) accredited laboratory.

Coordinate site access and security requirements with the Contracting Officer and COT for all radiological materials and equipment containing ionizing radiation that are proposed for use on a government facility. The Navy COT or authorized representative will meet the contractor at a designated location, ensure safety of the materials being transported, and will escort the contractor to the job site and return upon completion of the work.

Loss or release of radioactive materials, and unplanned personnel exposures must be reported immediately to the Contracting Officer, RSO, and Base Security Department Emergency Number.

Actual exposure of the radiographic film or unshielding the source must not be initiated until after 5 p.m. on weekdays.

Provide a copy of all calibration records, and utilization records to the COT for radiological operations performed on the site.

Properly demark and barricade an area surrounding radiological operations to preclude personnel entrance, as per Navy Instruction, EM-385-1-1, Nuclear Regulatory Commission and Applicable State regulations and license requirements, and as per requirements established in the accepted Radiography Operation Planning Work Sheet.

Properly secure the radiological material and ionizing radiation equipment at all times, including keeping the devices in a properly marked and locked container, and secondarily locking the container to a secure point in the Contractorâ€TMs vehicle or other approved storage location during transportation and while not in use. While in use, maintain a continuous visual observation on the radiological material and ionizing radiation equipment. In instances where radiography is scheduled near or adjacent to buildings or areas having limited access or one-way doors, no assumptions shall be made as to building occupancy. Where necessary, the Contracting Officer will direct the Contractor to conduct an actual building entry, search, and alert. Where removal of personnel from such a building cannot be accomplished and it is otherwise safe to proceed with the radiography, a fully instructed employee shall be positioned inside such building or area to prevent exiting while external radiographic

operations are in process.

Transportation of Regulated Amounts of Radioactive Material will comply with 49 CFR, Subchapter C, Hazardous Material Regulations. Notify Local Fire authorities and the site Radiation Safety officer (RSO) of any Radioactive Material use.

Transmitter Requirements: The base policy concerning the use of transmitters such as radios, cell phones, etc., must be adhered to by all Contractor personnel. They must also obey Emissions control (EMCON) restrictions.

1.10 FACILITY OCCUPANCY CLOSURE

Streets, walks, and other facilities occupied and used by the Government shall not be closed or obstructed without written permission from the Contracting Officer.

1.11 CONFINED SPACE ENTRY REQUIREMENTS

Contractors entering and working in confined spaces performing shipyard industry work are required to follow the requirements of OSHA 29 CFR 1915. Contractors entering and working in confined spaces performing general industry work are required to follow the requirements of OSHA 29 CFR Part 1926 and comply with the requirements in Section 34 of USACE EM 385-1-1, OSHA 29 CFR 1910, and OSHA 29 CFR 1910.146.

PART 2 PRODUCTS

2.1 CONFINED SPACE SIGNAGE

The Contractor shall provide permanent signs integral to or securely attached to access covers for permit-required confined spaces provided by this contract. Signs wording: "DANGER--PERMIT-REQUIRED CONFINED SPACE - DO NOT ENTER -" in bold letters a minimum of 25 mm (one inch) in height and constructed to be clearly legible with all paint removed. The signal word "DANGER" shall be red and readable from 1.52 m (5 feet).

PART 3 EXECUTION

3.1 CONSTRUCTION, DESIGN, and OTHER WORK

Comply with USACE EM 385-1-1, NFPA 1, NFPA 70, NFPA 70E, NFPA 241, the APP, the AHA, Federal and/or State OSHA regulations, and other related submittals and activity fire and safety regulations. The most stringent standard prevails. PPE is governed in all areas by the nature of the work the employee is performing. Use personal hearing protection at all times in designated noise hazardous areas or when performing noise hazardous tasks. Safety glasses must be carried/available on each person.

Mandatory PPE includes:

a. Hard Hat

b. Appropriate Safety Shoes

c. Reflective Vests

3.1.1 Hazardous Material Use

Each hazardous material must receive approval prior to being brought onto the job site or prior to any other use in connection with this contract. Allow a minimum of 10 working days for processing of the request for use of a hazardous material.

3.1.2 Hazardous Material Exclusions

Notwithstanding any other hazardous material used in this contract, radioactive materials or instruments capable of producing ionizing/non-ionizing radiation (with the exception of radioactive material and devices used in accordance with USACE EM 385-1-1 such as nuclear density meters for compaction testing and laboratory equipment with radioactive sources) as well as materials which contain asbestos, mercury or polychlorinated biphenyls, di-isocynates, lead-based paint are prohibited. The Contracting Officer, upon written request by the Contractor, may consider exceptions to the use of any of the above excluded materials. The Radiation Safety Officer (RSO) must be notified prior to excepted items of radioactive material and devices being brought on base.

3.1.3 Unforeseen Hazardous Material

The design should have identified materials such as PCB, lead paint, and friable and non-friable asbestos. If material, not indicated, that may be hazardous to human health upon disturbance during operations is encountered, stop that portion of work and notify the Contracting Officer immediately. Within 14 calendar days the Government will validate if the material is hazardous. If material is not hazardous or poses no danger, the Government will direct the Contractor to proceed without change. If material is hazardous and handling of the material is necessary to accomplish the work, the Government will issue a modification pursuant to "FAR 52.243-4, Changes" and "FAR 52.236-2, Differing Site Conditions."

3.2 PRE-OUTAGE COORDINATION MEETING

Contractors are required to apply for utility outages at least 15 days in advance. As a minimum, the request should include the location of the outage, utilities being affected, duration of outage, and any necessary sketches. Special requirements for electrical outage requests are contained elsewhere in this specification section. Once approved, and prior to beginning work on the utility system requiring shut down, the Contractor shall attend a pre-outage coordination meeting with the Contracting Officer to review the scope of work and the lock-out/tag-out procedures for worker protection. No work will be performed on energized electrical circuits unless proof is provided that no other means exist. For electrical work positive cable/circuit identification must be made prior to submitting any outage request. Arrangements are to be coordinated with the Contracting Officer and Station Utilities for identification. The Contracting Officer will not accept an outage request until the Contractor satisfactorily documents that the circuits have been clearly identified. Following the application of lockout/tag out devices to all hazardous energy sources, applicable AHA should outline equipment restart methods to ensure "zero energy" state has been accomplished.

3.3 CONTROL OF HAZARDOUS ENERGY (LOCKOUT/TAGOUT)

Contractor shall ensure that each employee is familiar with and complies with these procedures and USACE EM 385-1-1, Section 12, Control of

Hazardous Energy.

3.4 FALL HAZARD PROTECTION AND PREVENTION PROGRAM

Establish a fall protection and prevention program, for the protection of all employees exposed to fall hazards. Within the program include company policy, identify responsibilities, education and training requirements, fall hazard identification, prevention and control measures, inspection, storage, care and maintenance of fall protection equipment and rescue and evacuation procedures.

3.4.1 Training

Institute a fall protection training program. As part of the Fall Hazard Protection and Prevention Program, provide training for each employee who might be exposed to fall hazards. Provide training by a competent person for fall protection in accordance with USACE EM 385-1-1, Section 21.B.

3.4.2 Fall Protection Equipment and Systems

Enforce use of the fall protection equipment and systems designated for each specific work activity in the Fall Protection and Prevention Plan and/or AHA at all times when an employee is exposed to a fall hazard. Protect employees from fall hazards as specified in EM 385-1-1, Section 21. In addition to the required fall protection systems, safety skiff, personal floatation devices, life rings etc., are required when working above or next to water in accordance with USACE EM 385-1-1, Paragraphs 21.N through 21.N.04. Personal fall arrest systems are required when working from an articulating or extendible boom, swing stages, or suspended platform. In addition, personal fall arrest systems are required when operating other equipment such as scissor lifts if the work platform is capable of being positioned outside the wheelbase. The need for tying-off in such equipment is to prevent ejection of the employee from the equipment during raising, lowering, or travel. Fall protection must comply with 29 CFR 1926.500, Subpart M, USACE EM 385-1-1 and ASSE/SAFE A10.32.

3.4.3 Personal Fall Arrest Equipment

Personal fall arrest equipment, systems, subsystems, and components shall meet ASSE/SAFE Z359.1. Only a full-body harness with a shock-absorbing lanyard or self-retracting lanyard is an acceptable personal fall arrest body support device. Body belts may only be used as a positioning device system (for uses such as steel reinforcing assembly and in addition to an approved fall arrest system). Harnesses shall have a fall arrest attachment affixed to the body support (usually a Dorsal D-ring) and specifically designated for attachment to the rest of the system. Only locking snap hooks and carabiners shall be used. Webbing, straps, and ropes shall be made of synthetic fiber. The maximum free fall distance when using fall arrest equipment shall not exceed 1.8 m 6 feet. The total fall distance and any swinging of the worker (pendulum-like motion) that can occur during a fall shall always be taken into consideration when attaching a person to a fall arrest system.

3.4.4 Fall Protection for Roofing Work

Implement fall protection controls based on the type of roof being constructed and work being performed. Evaluate the roof area to be accessed for its structural integrity including weight-bearing capabilities for the projected loading.

a. Low Sloped Roofs:

(1) For work within 1.8 m 6 feet of an edge, on low-slope roofs, Protect personnel from falling by use of personal fall arrest systems, guardrails, or safety nets. A safety monitoring system used by itself as the only form of fall protection system is not adequate fall protection and is not authorized.

(2) For work greater than 1.8 m 6 feet from an edge, erect and install warning lines in accordance with 29 CFR 1926.500 and USACE EM 385-1-1.

b. Steep-Sloped Roofs: Work on steep-sloped roofs requires a personal fall arrest system, guardrails with toe-boards, or safety nets. This requirement also includes residential or housing type construction, repair, or maintenance.

3.4.5 Horizontal Lifelines

Design, install, certify and use under the supervision of a qualified person horizontal lifelines for fall protection as part of a complete fall arrest system which maintains a safety factor of 2 (29 CFR 1926.500).

3.4.6 Guardrails and Safety Nets

Design, install and use guardrails and safety nets in accordance with EM 385-1-1 and 29 CFR 1926 Subpart M.

3.4.7 Rescue and Evacuation Procedures

When personal fall arrest systems are used, the Contractor must ensure the mishap victim can self-rescue or can be rescued promptly should a fall occur. Prepare a Rescue and Evacuation Plan and include a detailed discussion of the following: methods of rescue; methods of self-rescue; equipment used; training requirement; specialized training for the rescuers; procedures for requesting rescue and medical assistance; and transportation routes to a medical facility. Include the Rescue and Evacuation Plan within the Activity Hazard Analysis (AHA) for the phase of work, in the Fall Protection and Prevention (FP&P) Plan, and the Accident Prevention Plan (APP).

3.4.8 Scaffold

Provide employees with a safe means of access to scaffold platforms. Climbing of any scaffold braces or supports not specifically designed for access is prohibited. Access scaffold platforms greater than 6 m 20 feet maximum in height by use of a scaffold stair system. Do not use vertical ladders commonly provided by scaffold system manufacturers for accessing scaffold platforms greater than 6 m 20 feet maximum in height. The use of an adequate gate is required. Ensure that employees are qualified to perform scaffold erection and dismantling. Do not use scaffold without the capability of supporting at least four times the maximum intended load or without appropriate fall protection as delineated in the accepted fall protection and prevention plan. Stationary scaffolds must be attached to structural building components to safeguard against tipping forward or backward. Give special care to ensure scaffold systems are not overloaded. Side brackets used to extend scaffold platforms on self-supported scaffold systems for the storage of material are prohibited. The first tie-in shall be at a minimum at the height equal to 4 times the width of the smallest

dimension of the scaffold base. Place work platforms on mud sills. Scaffold or work platform erectors shall have fall protection during the erection and dismantling of scaffolding or work platforms that are more than six feet. Delineate fall protection requirements when working above six feet or above dangerous operations in the Fall Protection Program and Prevention (FP&P) Plan and Activity Hazard Analysis (AHA) for the phase of work.

3.4.9 Fall Prevention during Design Phase

During design phase the Contractor shall consider and eliminate fall hazards encountered during the operation and maintenance evolutions of the facility. If it is not feasible to eliminate or prevent the need to work at heights with its subsequent exposure to fall hazards, control measures should be included in the design to protect personnel conducting maintenance work after completion of the project. In addition to the detailed requirements included in the provisions of this contract, the design work shall incorporate the requirements of 29 CFR 1910 Standards and ASSE/SAFE Z359.0, ASSE/SAFE Z359.1, ASSE/SAFE Z359.2, ASSE/SAFE Z359.3, ASSE/SAFE Z359.4 and ASSE/SAFE A1264.1, NFPA 1.

3.5 EQUIPMENT

3.5.1 Material Handling and Applicable Mechanized Equipment

a. Material handling equipment such as forklifts shall not be modified with work platform attachments for supporting employees unless specifically delineated in the manufacturer's printed operating instructions.

b. The use of hooks on equipment for lifting of material must be in accordance with manufacturer's printed instructions. Additionally, when material handling equipment is used as a crane it must meet NAVFAC P-307 requirements in Sections 1.7.2, "Contractor Operated Cranes," and 12, "Investigation and Reporting of Crane and Rigging Gear Accidents."

c. Operators of forklifts or power industrial trucks shall be licensed in accordance with OSHA. Proof of qualifications for operator shall be kept on the project site and addressed as part of the AHA.

d. Manufacture specifications or owners manual for the equipment shall be on-site and reviewed for additional safety precautions or requirements that are sometimes not identified by OSHA or USACE EM 385-1-1. Incorporate such additional safety precautions or requirements into the AHAs.

e. Machinery & Mechanized Equipment are subject to additional Navy proof of certification. A certification form for acceptance by the Contracting Officer prior to being placed into use may be required.

f. Submit a Machinery & Mechanized Equipment Certification Form for acceptance by the Contracting Officer prior to being placed into use. A copy of the certification form will be provided during the Pre-construction Conference.

3.5.2 Weight Handling Equipment

a. Equip cranes and derricks as specified in EM 385-1-1, section 16.

b. Notify the Contracting Officer 15 days in advance of any cranes entering the activity so that necessary quality assurance spot checks can be

coordinated. Prior to cranes entering federal activities, a Crane Access Permit must be obtained from the Contracting Officer. Acopy of the permitting process will be provided at the Preconstruction Conference. Contractor's operator shall remain with the crane during the spot check.

c. Comply with the crane manufacturer's specifications and limitations for erection and operation of cranes and hoists used in support of the work. Perform erection under the supervision of a designated person (as defined in ASME B30.5). Perform all testing in accordance with the manufacturer's recommended procedures.

d. Comply with ASME B30.5 for mobile and locomotive cranes, ASME B30.22 for articulating boom cranes, ASME B30.3 for construction tower cranes, and ASME B30.8 for floating cranes and floating derricks.

e. Under no circumstance shall a Contractor make a lift at or above 90 percent of the cranes rated capacity in any configuration.

f. When operating in the vicinity of overhead transmission lines, operators and riggers shall be alert to this special hazard and follow the requirements of USACE EM 385-1-1 Section 11, NAVFAC P-307 Figure 10-3 and ASME B30.5 or ASME B30.22 as applicable.

g. Do not crane suspended personnel work platforms (baskets) unless the Contractor proves that using any other access to the work location would provide a greater hazard to the workers or is impossible. Do not lift personnel with a line hoist or friction crane.

h. Inspect, maintain, and recharge portable fire extinguishers as specified in NFPA 10, Standard for Portable Fire Extinguishers.

i. All employees must keep clear of loads about to be lifted and of suspended loads.

j. Use cribbing when performing lifts on outriggers.

k. The crane hook/block must be positioned directly over the load. Side loading of the crane is prohibited.

l. A physical barricade must be positioned to prevent personnel from entering the counterweight swing (tail swing) area of the crane.

m. Certification records which include the date of inspection, signature of the person performing the inspection, and the serial number or other identifier of the crane that was inspected shall always be available for review by Contracting Officer personnel.

n. Written reports listing the load test procedures used along with any repairs or alterations performed on the crane shall be available for review by Contracting Officer personnel.

o. Certify that all crane operators have been trained in proper use of all safety devices (e.g. anti-two block devices).

p. Take steps to ensure that wind speed does not contribute to loss of control of the load during lifting operations. Prior to conducting lifting operations set a maximum wind speed at which a crane can be safely operated based on the equipment being used, the load being

lifted, experience of operators and riggers, and hazards on the work site. This maximum wind speed determination shall be included as part of the activity hazard analysis plan for that operation.

3.6 EXCAVATIONS

Soil classification must be performed by a competent person in accordance with 29 CFR 1926 and EM 385-1-1.

3.6.1 Utility Locations

All underground utilities in the work area must be positively identified by a third party, independent, private utility locating company in addition to any station locating service and coordinated with the station utility department.

3.6.2 Utility Location Verification

The Contractor must physically verify underground utility locations, including utility depth, by hand digging using wood or fiberglass handled tools when any adjacent construction work is expected to come within three feet of the underground system.

3.6.3 Utilities Within and Under Concrete, Bituminous Asphalt, and Other Impervious Surfaces

Utilities located within and under concrete slabs or pier structures, bridges, parking areas, and the like, are extremely difficult to identify. Whenever contract work involves chipping, saw cutting, or core drilling through concrete, bituminous asphalt or other impervious surfaces, the existing utility location must be coordinated with station utility departments in addition to location and depth verification by a third party, independent, private locating company. The third party, independent, private locating company shall locate utility depth by use of Ground Penetrating Radar (GPR), X-ray, bore scope, or ultrasound prior to the start of demolition and construction. Outages to isolate utility systems must be used in circumstances where utilities are unable to be positively identified. The use of historical drawings does not alleviate the Contractor from meeting this requirement.

3.7 ELECTRICAL

3.7.1 Conduct of Electrical Work

As delineated in USACE EM 385-1-1 electrical work is to be conducted in a de-energized state unless there is no alternative method for accomplishing the work. In those cases an energized work permit shall be obtained from the contracting officer. The energized work permit application shall be accompanied by the AHA and a summary of why the equipment/circuit needs to be worked energized. Underground electrical spaces must be certified safe for entry before entering to conduct work. Cables that will be cut must be positively identified and de-energized prior to performing each cut. Attachment of temporary grounds shall be in accordance with ASTM F855 and IEEE 1048. Perform all high voltage cable cutting remotely using hydraulic cutting tool. When racking in or live switching of circuit breakers, no additional person other than the switch operator will be allowed in the space during the actual operation. Plan so that work near energized parts is minimized to the fullest extent possible. Use of electrical outages clear of any energized electrical sources is the preferred method. When

working in energized substations, only qualified electrical workers shall be permitted to enter. When work requires Contractor to work near energized circuits as defined by the NFPA 70, high voltage personnel must use personal protective equipment that includes, as a minimum, electrical hard hat, safety shoes, insulating gloves and electrical arc flash protection for personnel as required by NFPA 70E. Insulating blankets, hearing protection, and switching suits may also be required, depending on the specific job and as delineated in the Contractor's AHA. Contractor shall ensure that each employee is familiar with and complies with these procedures and 29 CFR 1910.147.

3.7.2 Portable Extension Cords

Size portable extension cords in accordance with manufacturer ratings for the tool to be powered and protected from damage. Immediately removed from service all damaged extension cords. Portable extension cords shall meet the requirements of NFPA 70E and OSHA electrical standards.

3.8 WORK IN CONFINED SPACES

In addition to applicable sections of USACE EM 385-1-1, OSHA 29 CFR 1910.146, Directive CPL 2.100 and OSHA 29 CFR 1926.21 the Contractor shall comply with the following. Any potential for a hazard in the confined space requires a permit system to be used.

a. Entry Procedures. Prohibit entry into a confined space by personnel for any purpose, including hot work, until the qualified person has conducted appropriate tests to ensure the confined or enclosed space is safe for the work intended and that all potential hazards are controlled or eliminated and documented. (See Section 06.I.06 of USACE EM 385-1-1 for entry procedures.) All hazards pertaining to the space shall be reviewed with each employee during review of the AHA.

b. Forced air ventilation is required for all confined space entry operations and the minimum air exchange requirements must be maintained to ensure exposure to any hazardous atmosphere is kept below its' action level regardless of classification.

c. Sewer wet wells require continuous atmosphere monitoring with audible alarm for toxic gas detection in addition to continuous forced air ventilation regardless of space classification.

3.9 USE OF EXPLOSIVES

Explosives shall not be used or brought to the project site without prior written approval from the Contracting Officer. Such approval shall not relieve the Contractor of responsibility for injury to persons or for damage to property due to blasting operations. Storage of explosives, when permitted on Government property, shall be only where directed and in approved storage facilities. These facilities shall be kept locked at all times except for inspection, delivery, and withdrawal of explosives.

3.10 ERGONOMICS CONSIDERATIONS DURING DESIGN PHASE

Facilities, processes, job tasks, tools and materials shall be designed to reduce or eliminate work-related musculoskeletal (WMSD) injuries and risk factors in the workplace. Designs shall ensure facility maintenance access is designed to reduce WMSD risk factors to the lowest level possible. In addition to the detailed requirements included in the provisions of this

contract, the design work shall incorporate the requirements of MIL-STD-1472F, DoD-HDBK 743A and ANSI/HFES 100.

SECTION 01 45 00.05 20

DESIGN AND CONSTRUCTION QUALITY CONTROL
11/11

PART 1 GENERAL

1.1 REFERENCES

The publications listed below form a part of this specification to the extent referenced. The publications are referred to in the text by the basic designation only.

ASTM INTERNATIONAL (ASTM)

ASTM E 329 (2011c) Agencies Engaged in the Testing and/or Inspection of Materials Used in Construction

U.S. ARMY CORPS OF ENGINEERS (USACE)

EM 385-1-1 (2008; Errata 1-2010; Changes 1-3 2010; Changes 4-6 2011) Safety and Health Requirements Manual

U.S. GREEN BUILDING COUNCIL (USGBC)

LEED-NC (2009) Leadership in Energy and Environmental Design New Construction Rating System(LEED-NC)

1.2 SUBMITTALS

The use of a "G" following a submittal indicates that a Government approval action is required. Submit the following in accordance with Section 01 33 10.05 20 DESIGN SUBMITTAL PROCEDURES and Section 01 33 00.05 20 CONSTRUCTION SUBMITTAL PROCEDURES.

SD-01 Preconstruction Submittals

Design Quality Control (DQC) Plan; G

Submit a DQC Plan prior to the Post Award Kickoff Meeting.

Construction Quality Control (CQC) Plan; G

Submit a Construction QC Plan prior to start of construction.

Commissioning Plan; G

Submit a Commissioning Plan within 60 days of approval of CxAuthority.

SD-05 Design Data

Design Quality Control Documentation; G

SD-07 Certificates

Preliminary Inspections and Final Acceptance Testing; G

Final Life Safety/Fire Protection Certification; G

IBC Special Inspections Certification; G

SD-11 Closeout Submittals

Summary Commissioning Report; G

1.3 QC PROGRAM REQUIREMENTS

Establish and maintain a QC program that is administered by a Design and Construction Quality Control organization, using Quality Control (Design and Construction) Plans, Commissioning Plans and Reports, meetings, a Coordination and Mutual Understanding Meeting, three phases of control, submittal review and approval, testing, completion inspections, and QC certifications and documentation necessary to provide design, materials, equipment, workmanship, fabrication, construction and operations which comply with the requirements of this Contract. The QC program shall cover on-site and off-site work. No construction work or testing may be performed unless the QC Manager is on the work site.

1.3.1 QC Plan Meeting

Prior to submission of the QC Plan, the QC Manager may request a meeting with the Contracting Officer to discuss the QC Plan requirements of this Contract.

The purpose of this meeting is to develop a mutual understanding of the QC Plan requirements prior to plan development and submission and to agree on the Contractor's list of Definable Features of Work (DFOWs).

1.3.2 Mutual Understanding Meeting

The purpose of this meeting is to develop a mutual understanding of the QC Plans, including documentation, administration, requirements & procedures, coordination of activities to be performed, and the coordination of the contractor's management, production and QC personnel. At the meeting, the contractor will explain in detail how the three phases of quality control will be implemented for each DFOW.

1.3.3 Design and Construction Quality Control Plans

The Contractor shall provide a project specific Design Quality Control (DQC) Plan and Construction Quality Control (CQC) Plan, for review and approval by the Contracting Officer. The Contractor shall perform no design until the DQC Plan is approved and no construction until the CQC Plan is approved. The Contractor's plans shall include the following:

a. The QC organization for this contract, including member resumes.

b. A letter from an officer of the company designating the QC Manager, Alternate QC Manager, DQC Manager, Commissioning Authority, and their authority.

c. QC Manager qualifications.

d. DQC Manager qualifications.

e. List of DFOW including list of design submittal packaging. DFOW is a task that is separate and distinct from other tasks and has control requirements and work crews unique to the task.

f. For the CQC Plan, a plan to implement the "Three Phases of Control" for each DFOW.

g. For the CQC Plan, a testing Plan, log and list of personnel and accredited laboratories that will perform tests. Construction materials testing laboratories must be accredited by a laboratory accreditation authority and will be required to submit a copy of the Certificate of Accreditation and Scope of Accreditation with the testing plan. Coordinate this testing Plan with the Commissioning Plan verification testing requirements to avoid duplication of effort.

h. Submittal Register including design submittals, listing personnel who will review submittals and noting submittals for Contracting Officer review.

i. Procedures for submitting and reviewing design changes/ variations prior to submission to the Contracting Officer.

j. As a part of the Contractor's CQC plan, a statement of Special Inspections shall be prepared by the Designer of Record (DOR) describing a complete list of materials and work requiring special inspections, the inspections to be performed and any applicable quality assurance plans and structural observations. The Contractor's plan shall implement the applicable requirements of the International Building Code (IBC), Chapter 17 "Structural Tests and Special Inspections." The plan shall include a listing of the individuals, approved agencies or firms that will be retained for conducting the required special inspections accompanied by a description of individual inspector's experience and a copy of all required certifications. Structural tests and special inspections, as outlined in Chapter 17 of the IBC, shall be conducted by individuals and agents that are under the direct supervision of a Registered Design Professional (RDP) and meet the requirements of ASTM E 329.

k. As part of the Contractor's DQC plan, a statement of Life Safety and Fire Protection Features Inspections and Testing shall be prepared by the Fire Protection Designer of Record. Examples of life safety and

fire protection features include, but are not limited to, water distribution systems including fire pumps and fire hydrants, fire resistive assemblies such as fire rated walls/partitions, through -penetration firestop systems, spray-applied fire proofing of structural components, fire alarm and detection systems, fire suppression and standpipe systems, means of egress components, emergency and exit lighting fixtures. The plan will include a listing of the individuals, approved agencies or firms that will be retained for conducting the required inspections and tests accompanied by a description of individual inspector's experience and a copy of all required certifications. Additional copies of this plan shall be submitted to the NAVFAC Fire Protection Engineer and the Installation Fire Chief. This plan shall include the following:

(1) Comprehensive list of systems, components or features to be inspected and tested.

(2) Description of performance verification testing activities for each system or component.

(3) Procedures and schedules for functional performance tests of all systems requiring functional testing.

l. For the DQC plan, submit a formal Communication Plan that indicates the frequency of design meetings and what information is covered in those meetings, key design decision points tied to the Network Analysis Schedule and how the DOR plans to include the Government in those decisions, peer review procedures, interdisciplinary coordination, design review procedures, comment resolution, etc.

The Communication Plan will emphasize key decisions and possible problems the Contractor and Government may encounter during the design phase of the project. Provide a plan to discuss design alternatives and design coordination with the stakeholders at the key decision points as they arise on the project. Identify individual stakeholders and suggested communication methods that will be employed to expedite and facilitate each anticipated critical decision. Communication methods may include: Concept Design Workshop, over-the-shoulder review meetings, presentation at client's office, lifecycle cost analysis presentation, technical phone conversation, and formal review meeting. The design portion of the Communication Plan must be written by the DQC Manager and confirmed during the Post Award Kick off Partnering. Update the Communication Plan at every Partnering meeting.

m. For the DQC Plan, procedures for insuring the design documents are submitted in accordance with UFC 1-300-09N, Design Procedures and other procedures to ensure disciplines have been properly coordinated to eliminate conflicts.

n. For the DQC Plan, provide Quality Control Documentation procedures such as QC review sets and QC comments to demonstrate that cross checking of all engineering disciple's design drawings and specifications has taken place. The QC review documentation shall exhibit a checking process of the design documents for completeness, accuracy, and constructability.

o. For the DQC Plan, a list of design subcontractors and the scope of the work which each firm will accomplish.

1.3.4 Commissioning Plan

The Contractor shall provide a project specific Commissioning Plan for review and acceptance by the Contracting Officer. The intent of the commissioning plan is to expose all critical issues and resolve them with input from the construction team at early stages of planning. Develop and submit the Commissioning Plan to define the on-site activities and roles and responsibilities for commissioning all building systems required by the Project Program paragraph entitled, Building Commissioning. The Commissioning Plan shall be updated as information changes during the project. The Plan shall include all items required by the LEED-NC 2009 and shall include the following:

a. Commissioning Authority qualifications and experience.

b. A description of the Commissioning Team's roles and responsibilities as well as organizational relationships with the Contractor's QC Manager, DQC Manager, and verification and testing personnel.

c. A listing of all systems required to be commissioned, include a list of required instruments and components for measurements, verifications, and full commissioning of mechanical systems.

d. A description of the testing and acceptance method used for each system. Describe all commissioning process activities. Include the sequence and schedule for starting and balancing air distribution systems to ensure construction materials, such as architectural finishes, are installed under the appropriate environmental conditions. Also address the procedure that will be used to "dry out" the structure.

e. A procedures and schedule for functional performance tests of all systems to be commissioned. The Commissioning Authority shall be present for all functional performance tests. Coordinate this schedule with the QC Plan testing requirements to avoid duplication of effort.

f. Coordinate with eOMSI Preparer to approve the training plan, content of the facility maintenance and operational training, and training schedule for Government personnel. Provide training sessions on performance of the systems that were commissioned.

1.3.5 Summary Commissioning Report

The Commissioning Authority shall provide a Summary Commissioning Report upon completion of the performance verification items. The Summary Commissioning Report shall include all items required by LEED-NC 2009 and shall include the following:

a. Executive Summary of the commissioning process including results and observations of the commissioning program.

b. A history of deficiencies identified and their resolution. Indicate outstanding issues to be resolved.

c. Commissioned systems performance test results and evaluations. Provide a 72 hour data trend utilizing the building automation system. Verify that the trend data reflects proper operation of the system.

1.4 QC ORGANIZATION

The QC Manager shall manage the QC organization and shall report to an officer of the firm and shall not be subordinate to the Project Superintendent or the Project Manager.

1.4.1 QC and Alternate QC Manager

QC and Alternate QC Manager qualifications:

a. Complete the course entitled "Construction Quality Management (CQM) for Contractors." and maintain a current certificate. The QC Manager that does not have a current certification must obtain the CQM for Contractors course certification within 90 days of award. This course is periodically offered by the Naval Facilities Engineering Command and the Army Corps of Engineers. Contact the Contracting Officer for class schedule information.

b. Familiar with requirements of USACE EM 385-1-1, and experience in the areas of hazard identification and safety compliance.

c. Five years of combined experience as a Superintendent, QC Manager, Project Manager, or Project Engineer on similar size and type construction contracts, and at least two years experience as a QC Manager.

d. A graduate of a four year accredited college or university program in one of the following disciplines: Engineering, Architecture, Construction Management, Engineering Technology, Building Construction, or Building Science. The QC must have experience on similar size projects and the type of construction contracts which included the major trades that are part of this Contract.

QC and Alternate QC Manager responsibilities:

a. Participate in the Post Award Kick-off, Partnering, Preconstruction, Design Development, and Coordination and Mutual Understanding Meetings.

b. Implement the "Three Phase of Control" plan for each DFOW and notify the Contracting Officer at least 3 business days in advance of each Preparatory and Initial Phase meeting. Submit respective checklists to the Contracting Officer the next business day.

c. Ensure that no construction begins before the DOR has finalized the design for that segment of work, and construction submittals are approved as required.

d. Inspect all work and rework, using International Conference of Building Officials certified QC specialists as applicable, to ensure its compliance with contract requirements. Maintain a rework log.

e. Immediately stop any segment of work, which does not comply with the contract requirements and direct the removal and replacement of any defective work.

f. Remove any individual from the site who fails to perform their work in a skillful, safe and workmanlike manner or whose work does not comply with the contract plans and specifications.

g. Prepare daily QC Reports.

h. Provide daily photographic documentation to support the work reported in the Daily Reports. Maintain a file of CD/ DVD disks at the job site that assemble the photographs supporting the daily reports. Organize the supporting photographs into searchable files organized by date and under each date organize the photographs in folders for each definable features of work. Indicate on the disk label and disk holder the date range of pictures contained on each disk. Provide a date stamp on each picture and title each picture with a description of location and viewed components. Provide .jpeg color photograph files that are 300 DPI - printable at 8 inch by 10 inch (20 cm by 25 cm) size.

Photograph construction related to existing work to be covered by contract modifications and required rework as follows;

1) View of as-is conditions prior to modification/ rework.

2) View of as-is conditions with existing exterior enclosure and interior finishes removed before modification/ new work begins.

3) View of new/ modified construction prior to being covered by exterior enclosure and interior finishes.

4) View of completed new/ modified construction.

i. Ensure that Contractor Production Reports are prepared daily.

j. Hold bi-weekly QC meetings with the DQC Manager, Commissioning Authority, DOR (or representative), Superintendent and the Contracting Officer; participation shall be suitable for the phase of work. Distribute minutes of these meetings.

k. Ensure that design and construction submittals are reviewed and approved, as required by the contract, prior to allowing material on site and work to proceed with these items. Maintain a submittal register.

l. Update As-built drawings daily, maintaining up-to-date set on site.

m. Maintain a testing plan and log. Ensure that all testing is performed in accordance with the contract. Review all test reports and notify the Contracting Officer of all deficiencies, along with a proposal for corrective action.

n. Maintain rework log on site, noting dates deficiency identified, and date corrected.

o. Certify and sign statement on each invoice that all work to be paid under the invoice has been completed in accordance with contract requirements.

p. Perform Punch-out and participate in Pre-final and Final acceptance Inspections. Submit list of deficiencies to the Contracting Officer for each inspection. Correct all deficiencies prior to the Final inspection. Notify Contracting Officer prior to final inspection to establish a schedule date acceptable by the Contracting Officer.

q. Ensure that all required keys, operation and maintenance manuals,

warranty certificates, and the As-built drawings are correct and complete, in accordance with the contract, and submitted to the Contracting Officer.

r. Assure that all applicable tests, special inspections, and observations required by the contract are performed.

s. Coordinate all factory and on-site testing, Testing Laboratory personnel, QC Specialists, and any other inspection and testing personnel required by this Contract.

t. Notify the Contracting Officer of any proposed changes to the QC plan.

u. Retain a copy of approved submittals at project site, including Contractor's copy of approved samples.

v. Update the Performance Assessment Plan as described in the UFGS section 01 31 19.05 20, Post Award Meetings and discuss monthly at a QC meeting.

w. Coordinate training of Government maintenance personnel with the eOMSI Preparer to assure training materials and training classes are accurate and provide instruction and documentation on critical elements of the products, materials, and systems in the constructed facility. Verify that the Government's operating personnel were trained.

1.4.2 DQC Manager

The DQC Manager shall be a member of the QC organization, shall coordinate actions with the QC Manager, and shall not be subordinate to the Project Superintendent or the Project Manager.

DQC Manager qualifications:

a. A minimum of 5 years experience as a design Architect or Engineer on similar size and type designs /or design-build contracts. Provide education, experience, and management capabilities on similar size and type contracts.

b. Be a registered professional engineer or architect with an active registration. Provide proof of registration as part of the resume submittal package.

c. Complete the course entitled "Construction Quality Management (CQM) for Contractors."

DQC Manager responsibilities:

a. Be responsible for the design integrity, professional design standards, and all design services required.

b. Be a member of the Designer of Record's (DOR) firm.

c. Be responsible for development of the design portion of the QC Plan, incorporation and maintenance of the approved Design Schedule, and the preparation of DQC Reports and minutes of all design meetings.

d. Participate in the Post Award Kick-Off, all design planning meetings, design presentations, partnering, and QC meetings.

e. Implement the DQC plan and shall remain on staff involved with the

project until completion of the project.

f. Be cognizant of and assure that all design documents on the project have been developed in accordance with the Contract.

g. Provide Design Quality Control Documentation (DQCD) which indicates design coordination of the engineering disciplines. Submit DQCD with the prefinal and final design submittals as required in UFGS 01 33 10.05 20, Design Submittal Procedures.

h. Develop the submittal register. Coordinate with each DOR to determine what items need to be submitted, and who needs to approve.

i. Provide QC certification for design compliance.

j. Certify and sign statement on each invoice that all work to be paid to the DOR under the invoice has been completed in accordance with the contract requirements.

k. Prepare weekly DQC Reports that documents the work the design team accomplished that week.

l. Coordinate all training requirements with the QC and the eOMSI Preparer.

1.4.3 Commissioning Authority

Commissioning Authority qualifications:

The Commissioning Authority shall be a member of the QC organization, shall coordinate actions with the QC Manager, shall not be subordinate to the Project Superintendent or the Project Manager, and shall report findings directly to the Contracting Officer. The Commissioning Authority may also act as the DQC Manager if all DQC Manager qualifications are met. The Commissioning Authority selected shall meet the requirements of LEED-NC with the following additional qualifications:

a. Be certified Building System Commissioning (Cx) Contractor recognized by a Building Commissioning Organization. Acceptable minimum certifications are "Certified Cx Agent" from the Associated Air Balance Council (AABC); "NEBB Building Systems Cx Certified Professional" from National Environmental Balancing Bureau (NEBB); "Certified Building Cx Professional" from the Association of Energy Engineers (AEE); "Certified Cx Professional (CxP)" from the Building Commissioning Association (BCA); or "Commissioning Process Authority Professional" or "Commissioning Process Manager" from the University of Wisconsin College of Engineering.

b. Have documented Commissioning Authority experience in at least two building projects. Provide proof of commissioning experience as part of the Commissioning Plan.

Commissioning Authority responsibilities are specified in Section 17 10 00 Commissioning, includings in Part 5 of this RFP.

1.4.4 QC Specialists

QC Specialists shall assist and report to the QC Manager and may perform production related duties but must be allowed sufficient time to perform their assigned quality control duties. QC Specialists are required to

attend the Coordination and Mutual Understanding Meeting, QC meetings and be physically present at the construction site to perform the three phases of control and prepare documentation for each definable feature of work in their area of responsibility at the frequency specified below.

1.4.4.1 Fire Protection QC Specialist

The Fire Protection QC Specialist (FPQC) shall be a U.S.Registered Professional Engineer and shall be an integral part of the Prime Contractor's Quality Control Organization. This FPQC shall have no business relationships (owner, partner, operating officer, distributor, salesman, or technical representative) with any fire protection equipment device manufacturers, suppliers or installers for any such equipment provided as part of this project. The Fire Protection Designer of Record may serve as the lead Fire Protection QC Specialist, provided the following qualifications are met.

a. Qualifications/Experience: The FPQC shall have obtained their professional registration by successfully completing the Fire Protection Engineering discipline examination. This FPQC shall have a minimum of 5 years full time and exclusive experience in every aspect of facility design and construction as it relates to fire protection, which includes, but is not limited to, building code analysis, life safety code analysis, design of automatic detection and suppression systems, passive fire protection design, water supply analysis, and a multi-discipline coordination reviews, and construction surveillance.

b. Area of Responsibility: The FPQC is responsible for assuring the proper construction and installation of life safety and fire protection features across all disciplines and trades. The FPQC shall be responsible for assuring that life safety and fire protection features are provided in accordance with the design documents, approved construction submittals, and manufacturer's requirements. Examples include, but are not limited to, water distribution systems including fire pumps and fire hydrants, fire resistive assemblies such as spray-applied fire proofing of structural components and fire rated walls/partitions, fire alarm and detection systems, fire suppression and standpipe systems, emergency and exit lighting fixtures, etc.

c. Construction Surveillance: The FPQC is responsible for reviewing and implementing the QC Plan developed by the Fire Protection DOR. The FPQC shall visit the construction site as necessary to ensure life safety and fire protection systems are being constructed, applied, and installed in accordance with the approved design documents, approved construction submittals, and manufacturer's requirements. Frequency and duration of the field visits are dependent upon particular system components, system complexity, and phase of construction. At a minimum, field visits shall occur just prior to installation of suspended ceiling systems to inspect the integrity of passive fire protection features and fire suppression system piping, and required performance verification testing of all life safety and fire protection systems identified below and in Part 4.

(1) Preliminary Inspections and Final Acceptance Testing: FPQC shall personally witness all preliminary inspections of fire alarm/detection and suppression systems. Once preliminary inspections have been successfully completed, the FPQC shall submit a signed certificate to the QC Manager that systems are ready for final inspection and testing. The Naval

Facilities Engineering Command Fire Protection Engineer will witness formal tests and approve all systems before they are accepted. The QC Manager shall submit the request for formal inspection at least 15 days prior to the date the inspection is to take place. The QC manager shall provide 10 days advance notice to the Contracting Officer and the activity Fire Inspection Office of scheduled final inspections.

d. QC Documentation and Certifications: The following documentation and certification shall be prepared by the FPQC. Additional copies shall be submitted to the NAVFAC Fire Protection Engineer and the Installation Fire Chief.

(1) Field visit reports. Submit reports documenting all field visits and summarizing all findings.

(2) Inspection and Test reports and certificates. Submit in accordance with the applicable codes, standards, and this RFP.

(3) Final Life Safety/Fire Protection Certification. The FPQC shall provide certification that all life safety and fire protection systems have been inspected and in the FPQC's professional judgment,; have been installed in accordance with the contract documents, approved submittals, and manufacturer's requirements. This certification shall summarize all life safety and fire protection features, and shall bear the professional seal of the fire protection engineer.

1.4.4.2 Mechanical QC Specialist

Provide IBC Special Inspections Certification from the following specialist(s):

Qualification/ Experience in Area of ResponsibilityArea of ResponsibilityFrequencyMechanical Inspector, International Conference of Building Officals(ICBO) Certified/ 5 years minimumInstallation and Testing of BoilersMinimum 3 times a weekduring installation and full-time during testing Certified Elevator Inspector, certified by an organization accredited by ASME/ 5 years minimumPretesting to ensure safety code, specification, and building code complience; provide testing verification report prior to beginning final acceptance testOnce every two weeks during instalation, full time during Pretesting Registered Mechanical Engineer (PE)/ QC SpecialistTesting of Installed mechanical systemsFull time during testing

1.4.4.3 Soils Testing/Pile Installation and Testing QC Specialists

Provide IBC Special Inspections Certification from the following specialist(s):

Qualification/ Experience in Area of Responsibility Area of Responsibility Frequency Engineer or under the supervision of an Engineer Soil testing As required in IBC Chapter 17

1.4.4.4 Structural QC Specialists

Provide IBC Special Inspections Certification from the following specialist(s):

Qualification/ Experience in Area of ResponsibilityArea of ResponsibilityFrequencyEngineer or under the supervision of an Engineer

Structural Welding Inspector Once a week during installation and full time during testing.

1.4.4.5 Building Envelope QC Specialist

Provide IBC Special Inspections Certification from the following specialist(s):

Qualification/ Experience in Area of ResponsibilityArea of ResponsibilityFrequencyRoofing Manufacturer's Technical Representative/ 5 years minimum with roofing system used.Installation and testing of roofingOnce a week during installation, two times a week during flashing installation and full time during roof testing.

1.5 THREE PHASES OF CONTROL

The Three Phases of Control shall adequately cover both on-site and off-site work and shall include the following for each DFOW.

1.5.1 Preparatory Phase

Notify the Contracting Officer at least two work days in advance of each preparatory phase meeting. The meeting shall be conducted by the QC Manager and attended by the Project Superintendent, QC Specialists, and the foreman responsible for the DFOW. The DQC Manager shall also attend if required by structural tests and special inspections, as outlined in Chapter 17 of the IBC and the DQC Plan. When the DFOW will be accomplished by a subcontractor, that subcontractor's foreman shall attend the preparatory phase meeting. Document the results of the preparatory phase actions in the daily Contractor Quality Control Report and in the Preparatory Phase Checklist. Perform the following prior to beginning work on each DFOW:

a. Review each paragraph of the applicable specification sections;

b. Review the Contract drawings;

c. Verify that appropriate shop drawings and submittals for materials and equipment have been submitted and approved. Verify receipt of approved factory test results, when required;

d. Review the testing plan and ensure that provisions have been made to provide the required QC testing;

e. Examine the work area to ensure that the required preliminary work has been completed;

f. Examine the required materials, equipment and sample work to ensure that they are on hand and conform to the approved shop drawings and submitted data;

g. Discuss the specific controls used in construction methods, construction tolerances, workmanship standards, and the approach that will be used to provide quality construction by planning ahead and identifying potential problems for each DFOW; and

h. Review the APP and appropriate Activity Hazard Analysis (AHA) to ensure that applicable safety requirements are met, and that required Material Safety Data Sheets (MSDS) are submitted.

1.5.2 Initial Phase

Notify the Contracting Officer at least two work days in advance of each initial phase. When construction crews are ready to start work on a DFOW, conduct the initial phase with the Project Superintendent, QC Specialists, and the foreman responsible for that DFOW. The DQC Manager shall also attend if required by structural tests and special inspections, as outlined in Chapter 17 of the IBC and the DQC Plan. Observe the initial segment of the DFOW to ensure that the work complies with Contract requirements. Document the results of the initial phase in the daily CQC Report and in Initial Phase Checklist. Repeat the initial phase for each new crew to work on-site, or when acceptable levels of specified quality are not being met. Perform the following for each DFOW:

a. Establish the quality of workmanship required;

b. Resolve conflicts;

c. Ensure that testing is performed by the approved laboratory, and

d. Check work procedures for compliance with the APP and the appropriate AHA to ensure that applicable safety requirements are met.

e. Ensure manufacturer's representative has performed necessary inspections, if required.

1.5.3 Follow-Up Phase

Perform the following for on-going work daily, or more frequently as necessary, until the completion of each DFOW and document in the daily CQC Report:

a. Ensure the work is in compliance with Contract requirements;

b. Maintain the quality of workmanship required;

c. Ensure that testing is performed by the approved laboratory; and

d. Ensure that rework items are being corrected.

1.5.4 Additional Preparatory and Initial Phases

Additional preparatory and initial phases shall be conducted on the same DFOW if the quality of on-going work is unacceptable, if there are changes in the applicable QC organization, if there are changes in the on-site production supervision or work crew, if work on a DFOW is resumed after substantial period of inactivity, or if other problems develop.

1.5.5 Notification of Three Phases of Control for Off-Site Work

Notify the Contracting Officer at least two weeks prior to the start of the preparatory and initial phases.

1.6 COMPLETION INSPECTIONS

The Contractor shall perform the necessary punchout, prefinal, and final inspections, compile punchlists, and correct deficiencies.

1.6.1 Punch-Out Inspection

Near the completion of all work or any increment thereof, established by a completion time stated in the Contract Clause entitled "Commencement, Prosecution, and Completion of Work," or stated elsewhere in the specifications, the QC Manager and the CA must conduct an inspection of the work and develop a "punch list" of items which do not conform to the approved drawings, specifications and Contract. Include in the punch list any remaining items on the "Rework Items List", which were not corrected prior to the Punch-Out Inspection. Include within the punch list the estimated date by which the deficiencies will be corrected. Provide a copy of the punch list to the Contracting Officer. The QC Manager, or staff, must make follow-on inspections to ascertain that all deficiencies have been corrected. Once this is accomplished, notify the Contracting Officer that the facility is ready for the Government "Pre-Final Inspection".

1.6.2 Pre-Final Inspection

Near the completion of all work or any increment thereof, established by a completion time stated in the Contract Clause entitled "Commencement, Prosecution, and Completion of Work," or stated elsewhere in the specifications, the QC Manager and the CA must conduct an inspection of the work and develop a "punch list" of items which do not conform to the approved drawings, specifications and Contract. Include in the punch list any remaining items on the "Rework Items List", which were not corrected prior to the Punch-Out Inspection. Include within the punch list the estimated date by which the deficiencies will be corrected. Provide a copy of the punch list to the Contracting Officer. The QC Manager, or staff, must make follow-on inspections to ascertain that all deficiencies have been corrected. Once this is accomplished, notify the Contracting Officer that the facility is ready for the Government "Pre-Final Inspection".

1.6.3 Final Acceptance Inspection

Notify the Contracting Officer at least 14 calendar days prior to the date a final acceptance inspection can be held. State within the notice that all items previously identified on the pre-final punch list will be corrected and acceptable, along with any other unfinished Contract work, by the date of the final acceptance inspection. The Contractor must be represented by the QC Manager, the Project Superintendent, the CA, and others deemed necessary. Attendees for the Government will include the Contracting Officer, other FEAD/ROICC personnel, and personnel representing the Client. Failure of the Contractor to have all contract work acceptably complete for this inspection will because for the Contracting Officer to bill the Contractor for the Government's additional inspection cost in accordance with the Contract Clause entitled "Inspection of Construction."

1.7 DOCUMENTATION

Maintain current and complete records of on-site and off-site QC program operations and activities.

PART 2 PRODUCTS

Not used.

PART 3 EXECUTION

Not used.

-- End of Section --

THIS PAGE HAS BEEN INTENTIONALLY LEFT BLANK

SECTION 01 50 00.05 20

TEMPORARY FACILITIES AND CONTROLS FOR DESIGN-BUILD
11/07

PART 1 GENERAL

1.1 SUBMITTALS

The use of a "G" following a submittal indicates that a Government approval action is required. Submit the following in accordance with Section 01 33 10.05 20 DESIGN SUBMITTAL PROCEDURES and Section 01 33 00.05 20 CONSTRUCTION SUBMITTAL PROCEDURES.

SD-01 Preconstruction Submittals

Traffic control plan; G

Construction site plan; G

SD-03 Product Data

Backflow preventers

SD-06 Test Reports

Backflow Preventer Tests; G

SD-07 Certificates

Backflow Tester Certification; G

Backflow Preventers Certificate of Full Approval

1.2 EPA LISTED ITEMS USED IN CONDUCT OF THE WORK BUT NOT INCORPORATED IN THE WORK

There are many products listed in 40 CFR 247 which have been designated or proposed by EPA to include recycled or recovered materials that may be used by the Contractor in performing the work but will not be incorporated into the work. These products include office products, temporary traffic control products, and pallets. These non-construction products contain the highest practicable percentage of recycled or recovered materials and can be recycled when no longer needed.

1.3 CONSTRUCTION SITE PLAN

Prior to the start of work, submit a site plan showing the locations of temporary facilities (including layouts and details, equipment and material storage area (onsite and offsite), and access and haul routes used for this contract. Show locations of safety and construction fences, site trailers, construction entrances, trash dumpsters, temporary sanitary facilities, and worker parking areas.

1.4 BACKFLOW PREVENTERS CERTIFICATE

Certificate of Full Approval from FCCCHR List, University of Southern California, attesting that the design, size and make of each backflow preventer has satisfactorily passed the complete sequence of performance

testing and evaluation for the respective level of approval. Certificate of Provisional Approval will not be acceptable.

1.4.1 Backflow Prevention Training Certificate

The Contractor shall submit a certificate recognized by the State or local authority that states the Contractor has completed at least 10 hours of training in backflow preventer installations. The certificate must be current.

1.5 TEMPORARY UTILITIES

Reasonable amounts of the following utilities will be made available to the Contractor at the prevailing rates.

The point at which the Government will deliver such utilities or services and the quantity available shall be coordinated with the Contracting Officer. The Contractor shall pay all costs incurred in connecting, converting, and transferring the utilities to the work. The Contractor shall make connections, including providing backflow-preventing devices on connections to domestic water lines; and providing transformers; and make disconnections. Under no circumstances will taps to base fire hydrants be allowed for obtaining domestic water.

1.5.1 Utilities at Special Locations

Reasonable amounts of utilities will be made available to the Contractor at the prevailing Government rates. These rates may be obtained upon application to the Commanding Officer, by way of the Contracting Officer. The Contractor will be responsible for making connections, providing transformers and meters, and making disconnections; and for providing backflow preventer devices on connections to domestic water lines.

1.6 BACKFLOW TESTER CERTIFICATION

Prior to testing, submit to the Contracting Officer certification issued by the State or local regulatory agency attesting that the backflow tester has successfully completed a certification course sponsored by the regulatory agency. Tester shall not be affiliated with any company participating in any other phase of this Contract.

Certified by the State of Virginia.

1.7 WEATHER PROTECTION

Take necessary precautions to ensure that roof openings and other critical openings in the building are monitored carefully. Take immediate actions required to seal off such openings when rain or other detrimental weather is imminent, and at the end of each workday.

1.7.1 Building and Site Storm Protection

When a warning of gale force winds is issued, take precautions to minimize danger to persons, and protect the work and nearby Government property. Precautions shall include, but are not limited to, closing openings; removing loose materials, tools and equipment from exposed locations; and removing or securing scaffolding and other temporary work. Close openings in the work when storms of lesser intensity pose a threat to the work or any nearby Government property.

1.7.1.1 Hurricane Condition of Readiness

Unless directed otherwise, comply with:

a. Condition FOUR (Sustained winds of 93 km/hr(58 mph) or greater expected within 72 hours): Normal daily jobsite cleanup and good housekeeping practices. Collect and store in piles or containers all scrap lumber, waste material, and rubbish for removal and disposal at the close of each work day. Maintain the construction site including storage areas, free of accumulation of debris. Stack form lumber in neat piles less than one meter(4 feet) high. Remove all debris, trash, or objects that could become missile hazards. Review requirements pertaining to "Condition THREE" and continue action as necessary to attain "Condition FOUR" readiness. Contact Contracting Officer for Condition of Readiness (COR) updates and completion of required actions.

b. Condition THREE (Sustained winds of 93 km/hr(58 mph) or greater expected within 48 hours): Maintain "Condition FOUR" requirements and commence securing operations necessary for "Condition TWO" readiness. Cease all routine activities which might interfere with securing operations. Commence securing and stow all gear and portable equipment. Make preparations for securing buildings. Reinforce or remove formwork and scaffolding. Secure machinery, tools, equipment, materials, or remove from the jobsite. Expend every effort to clear all missile hazards and loose equipment from general base areas. Contact Contracting Officer for weather and COR updates and completion of required actions.

c. Condition TWO (Sustained winds of 93 km/hr(58 mph) or greater expected within 24 hours): Secure the jobsite, and leave Government premises.

d. Condition ONE (Sustained winds of 93 km/hr(58 mph) or greater expected within 12 hours): Contractor access to the jobsite and Government premises is prohibited.

1.8 STATION OPERATION AFFECT ON CONTRACTOR OPERATIONS

1.8.1 Special Restrictions Regarding Access of Vehicles and Parking

1.8.1.1 Interruption of Vehicular Traffic

If during the performance of work, it becomes necessary to modify vehicular traffic patterns at any locations, notify the Contracting Officer at least 15 calendar days prior to the proposed modification date, and provide a Traffic Control Plan detailing the proposed controls to traffic movement for approval. The plan shall be in accordance with State and local regulations and the FHWA SA-89-006, Part VI. Make all notifications and obtain any permits required for modification to traffic movements outside Station's jurisdiction. Provide cones, signs, barricades, lights, or other traffic control devices and personnel required to control traffic. Do not use foil-backed material for temporary pavement marking because of its potential to conduct electricity during accidents involving downed power lines.

1.9 STORAGE AREAS

Contractor shall be responsible for security of his property. The Contract Clause entitled "FAR 52.236-10, Operations and Storage Areas" and the following apply:

1.9.1 Storage in Existing Buildings

The Contractor shall be working in existing building; the storage of material will not be allowed in the building. Provide 2.4 m(8 foot) high security fence with a lockable gate around the storage area. Remove at the completion of work.

1.10 TEMPORARY SANITARY FACILITIES

Provide adequate sanitary conveniences of a type approved for the use of persons employed on the work, properly secluded from public observation, and maintained in such a manner as required and approved by the Contracting Officer. Maintain these conveniences at all times without nuisance. Upon completion of the work, remove the conveniences from the premises, leaving the premises clean and free from nuisance. Dispose of sewage through connection to a municipal, district, or station sanitary sewage system. Where such systems are not available, use chemical toilets or comparably effective units, and periodically empty wastes into a municipal, district, or station sanitary sewage system, or remove waste to a commercial facility. Include provisions for pest control and elimination of odors.

Provide temporary sewer and sanitation facilities that are self-contained units with both urinals and stool capabilities. Ventilate the units to control odors and fumes and empty and clean them at least once a week or more often if required by the Contracting Officer. The doors shall be self-closing. The exterior of the unit shall match the base standard color. Locate the facility behind the construction fence or out of the public view.

1.11 TEMPORARY BUILDINGS

Temporary facilities (including trailers) shall be in like new condition and shall be maintained throughout the project. Locate these facilities where directed and within the indicated operations area. Failure to maintain storage trailers or buildings to these standards shall result in the removal of non-complying units at the Contractor's expense. A sign not smaller than 600 by 600 mm(24 by 24 inches) shall be conspicuously placed on the trailer depicting the company name, business phone number, and emergency phone number. Trailers shall be anchored to resist high winds and must meet applicable state of local standards for anchoring mobile trailers. Storage of material/debris under such facilities is prohibited. Contractor shall be responsible for the security of the stored property.

1.11.1 Maintenance of Temporary Facilities

Paint in accordance with base standards and maintain the temporary facilities. Failure to do so will be sufficient reason to require their removal.

1.11.2 Navy Construction Representative's Office

Provide an office with a minimum of 9 square meter(100 square feet) of useful floor area for the exclusive use of Government personnel, in addition to and separate from any other office space provided by the Contractor. Provide a weathertight structure with adequate heating and cooling, toilet facilities, lighting, ventilation, a 1200 by 2400 mm(4 by 8 foot) plan table, computer work space a standard size office desk and chair, and telephone. Provide a door with a cylinder lock and windows with locking hardware. Make utility connections. Locate as directed . After completion of the work, remove the entire structure from the site.

1.11.3 Quality Control Manager Records and Field Office

Provide on the jobsite an office with approximately 9 square meter(100 square feet) of useful floor area for the exclusive use of the QC Manager. Provide a weathertight structure with adequate heating and cooling, toilet facilities, lighting, ventilation, a 1200 by 2400 mm(4 by 8 foot) plan table, a standard size office desk and chair, computer station, and working communications facilities. Provide a door with a cylinder lock and windows with locking hardware. Make utility connections. Locate as directed . File quality control records in the office and make available at all times to the Government. After completion of the work, remove the entire structure from the site.

PART 2 PRODUCTS

2.1 BACKFLOW PREVENTERS

Reduced pressure principle type conforming to the applicable requirements AWWA C511. Provide backflow preventers complete with 65 kg (150 pound) flanged cast iron, bronze or brass mounted gate valve and strainer, 304 stainless steel or bronze, internal parts. The particular make, model/design, and size of backflow preventers to be installed shall be included in the latest edition of the List of Approved Backflow Prevention Assemblies issued by the FCCCHR List and shall be accompanied by a Certificate of Full Approval from FCCCHR List.

2.2 PROJECT SIGN

Prior to initiating any work on site, provide one project identification sign at the location coordinated with the Contracting Officer. Construct the sign in accordance with project sign detail attached at the end of this section. Maintain sign throughout the life of the project. Upon completion of the project, remove the sign from the site. Provide rendering in accordance with Section 01 33 10.05 20 DESIGN SUBMITTAL PROCEDURES.

2.2.1 Project Identification Signboard (Navy)

A project identification signboard shall be provided in accordance with attached Plates . The signboard shall be provided at a conspicuous location on the job site where directed by the Contracting Officer.

a. The field of the sign shall consist of a minimum of 1200 by 2400 mm(4 by 8 foot) sheet of exterior plywood.

b. The entire signboard and supports shall be painted. The lettering and sign work shall be performed by a skilled sign painter using paint known in

the trade as bulletin colors. The colors, lettering sizes, and lettering styles shall be as indicated.

c. NAVFAC logo shall be a sticker/decal with either transparent or white background or paint the logo by stencil onto the sign. The weather resistant sticker/decal film shall be rated for a minimum of 2-year exterior vertical exposure. NAVFAC Logo is available at: https://portal.navfac.navy.mil/portal/page?_pageid=181,3465071&_dad=portal&_schema=PORTAL

d. Sign paint colors

(1) Blue = To match dark blue color in the NAVFAC logo.

(2) White = To match Brilliant White color in the NAVFAC logo.

PART 3 EXECUTION

3.1 TEMPORARY PHYSICAL CONTROLS

3.1.1 Access Controls

3.1.1.1 Temporary Barricades

Contractor shall provide for barricading around all work areas to prevent public access.

3.1.1.2 Fencing

Fencing shall be provided along the construction site at all open excavations and tunnels to control access by unauthorized people. Fencing must be installed to be able to restrain a force of at least 114.00 kg(250 pounds) against it.

Enclose the project work are and Contractor lay-down area with a 2400 mm(8 ft) high chain link fence and gates with brown, UV light resistant, plastic fabric mesh netting (similar to tennis court or other screening). Remove the fence upon completion and acceptance of the work. Intent is to block (screen) public view of the construction.

In addition, prior to the start of work, enclose those areas at the construction site which are not within the construction fence with a temporary safety fence, including gates and warning signs, to protect the public from construction activities. The safety fence shall match the base standard color (or bright orange where it protects excavated areas), shall be made of plastic fence from recovered materials containing 60-100 percent recovered content level plastic, a minimum of 1100 mm(42 inches) high, supported and tightly secured to steel posts located on minimum 3000 mm(10 foot) centers. Remove the fence from the work site upon completion of the contract.

3.1.1.3 Signs

Place warning signs at the construction area perimeter designating the presence of construction hazards requiring unauthorized persons to keep out. Signs must be placed on all sides of the project, with at least one sign every 90 m(300 feet). All points of entry shall have signs designating the construction site as a hard hat area.

3.1.1.4 Traffic Work

All work around/involving roadways, to include roadway excavations and utility crossings, will be conducted in accordance with Manual of Traffic Control Devices. Contractors shall provide and ensure appropriate road closure and detour signs are established as necessary for motor traffic management. All road closures shall be coordinated with the Contracting Officer in advance. Self-illuminated (lighted) barricades shall be provided during hours of darkness. Brightly-colored (orange) vests are required for all personnel working in roadways. Road closures shall require a road closure plan showing the location of signage.

3.2 TEMPORARY WIRING

Provide temporary wiring in accordance with NFPA 241 and NFPA 70, Assured Equipment Grounding Conductor Program. Program shall include frequent inspection of all equipment and apparatus.

3.3 REDUCED PRESSURE BACKFLOW PREVENTERS

Provide an approved reduced pressure backflow prevention assembly at each location where the Contractor taps into the Government potable water supply.

A certified tester(s) shall perform testing of backflow preventer(s) for proper installation and operation and provide subsequent tagging. Backflow preventer tests shall be performed using test equipment, procedures, and certification forms conforming to those outlined in the latest edition of the Manual of Cross-Connection Control published by the FCCCHR Manual. Test and tag each reduced pressure backflow preventer upon initial installation (prior to continued water use) and quarterly monthly thereafter. Tag shall contain the following information: make, model, serial number, dates of tests, results, maintenance performed, and signature of tester. Record test results on certification forms conforming to requirements cited earlier in this paragraph.

3.4 GRASS CUTTING

Cut grass (or annual weeds) within the construction and storage sites to a maximum 100 mm(4 inch) height at least once a week during the growing season unless the grass area is not visible to the public. Trim the grass around fences at time of grass cutting. Maintain grass or weeds on stockpiled earth as described above.

-- End of Section --

THIS PAGE HAS BEEN INTENTIONALLY LEFT BLANK

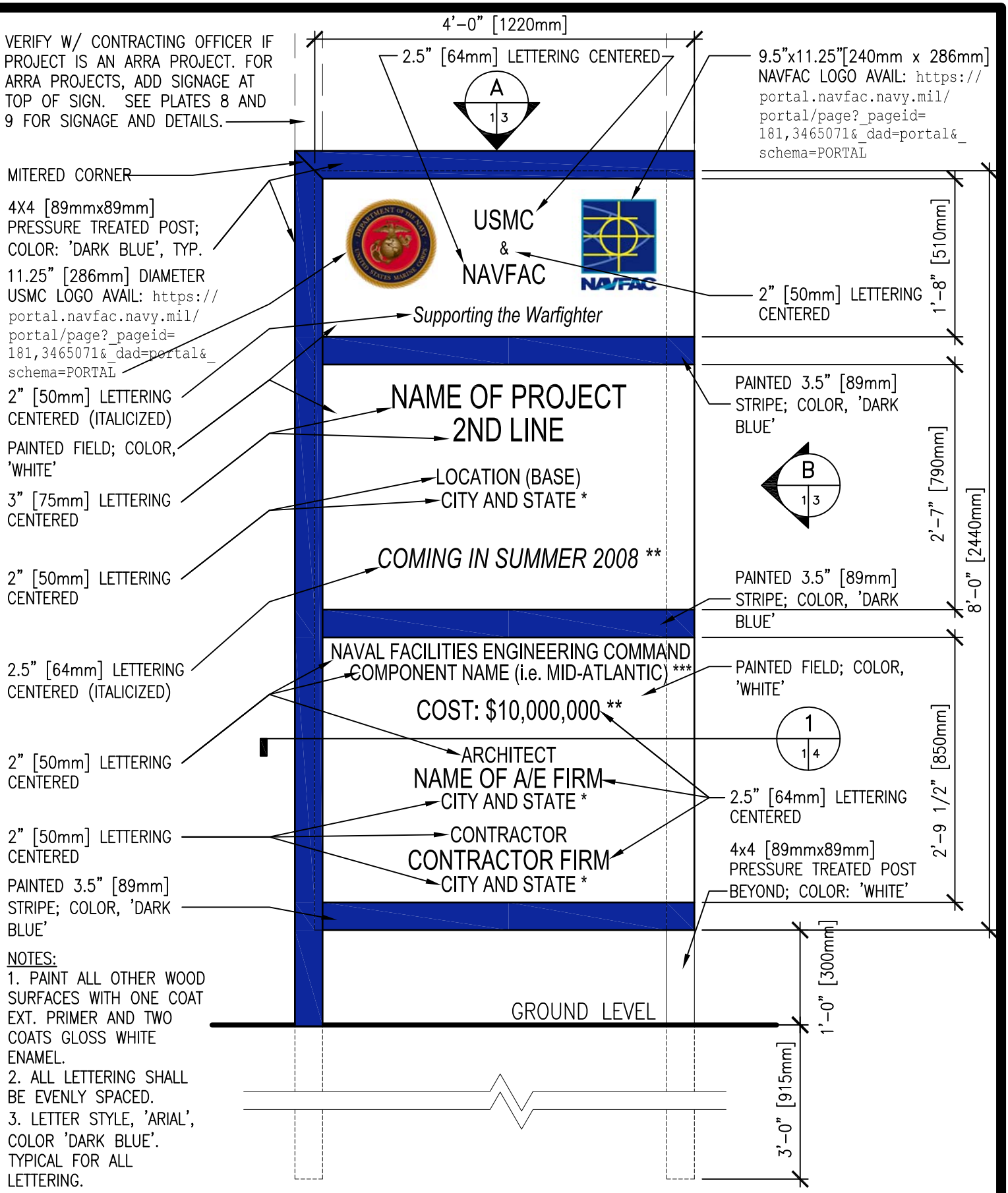

NOTES:
1. PAINT ALL OTHER WOOD SURFACES WITH ONE COAT EXT. PRIMER AND TWO COATS GLOSS WHITE ENAMEL.
2. ALL LETTERING SHALL BE EVENLY SPACED.
3. LETTER STYLE, 'ARIAL', COLOR 'DARK BLUE'. TYPICAL FOR ALL LETTERING.
*–ABBREVIATE STATE
**–CONFIRM USE WITH CONTRACTING OFFICER
***–VERIFY NAME WITH CONTRACTING OFFICER.

PROJECT IDENTIFICATION SIGNBOARD FOR MARINE CORPS PROJECTS

SCALE: 3/4" = 1'-0"

PLATE 1MC

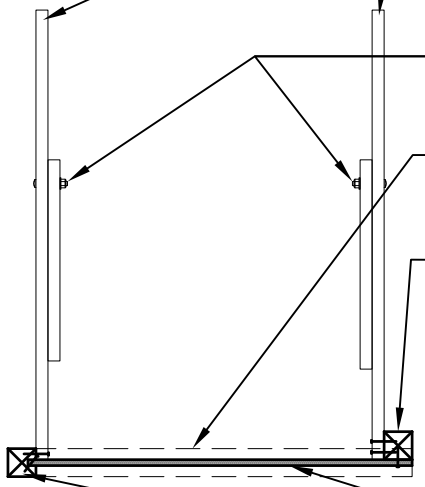

A 1,2 3

TOP VIEW

SCALE: 1/2" = 1'-0"

NOTES:
1. POSTS AND BRACES SHALL BE PRESSURE TREATED.
2. ALL FASTENERS SHALL BE ZINC COATED.
3. BRACING IS REQUIRED IN ALL SOIL CONDITIONS AND HIGH WIND ENVIRONMENTS.

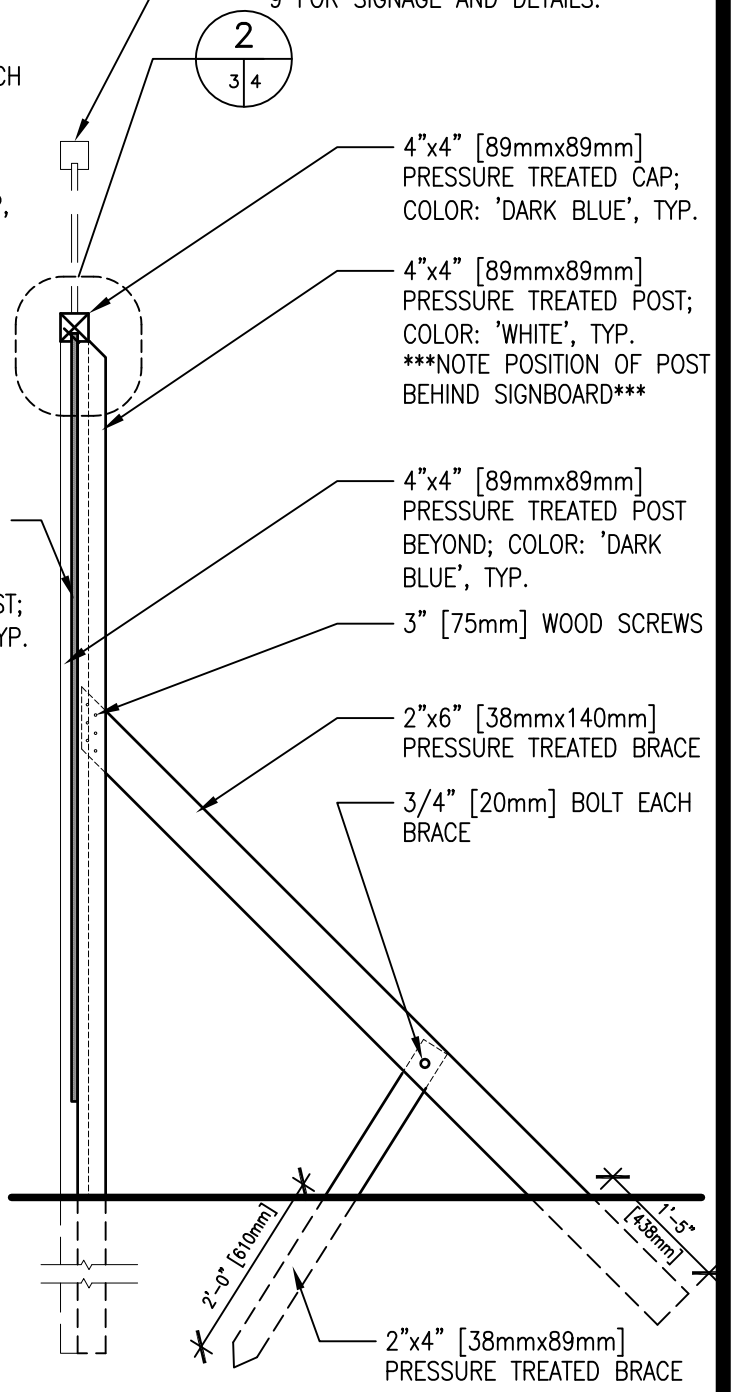

B 1,2 3

SIDE VIEW

SCALE: 1/2" = 1'-0"

PROJECT IDENTIFICATION SIGNBOARD SUPPORT DETAILS

PLATE 3

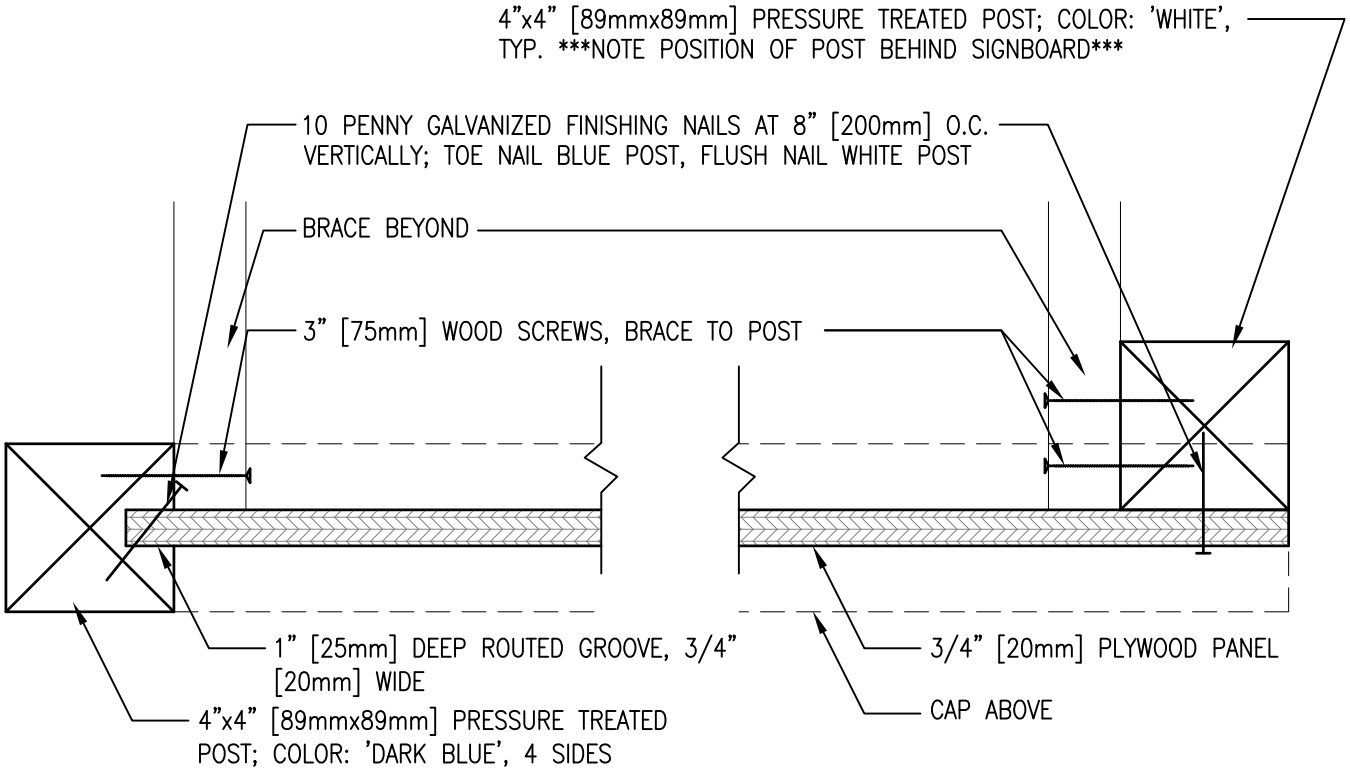

1 PLAN SECTION

1,2 | 4

SCALE: 3" = 1'-0"

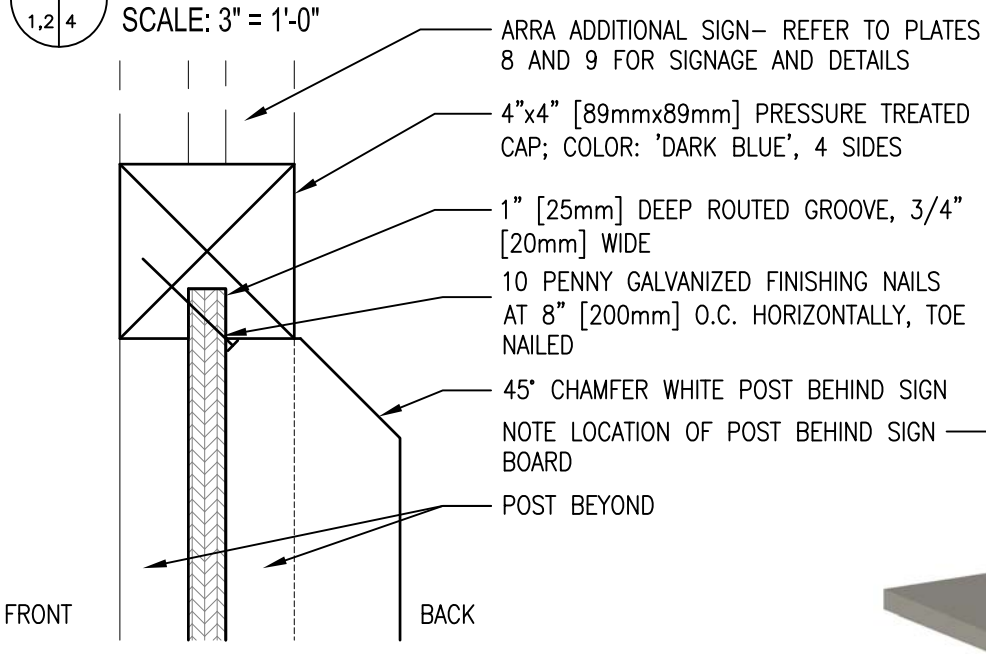

2 SECTION AT TOP

1,2 | 4

SCALE: 3" = 1'-0"

3 ISO VIEW

2 | 4

SCALE: NONE

PROJECT IDENTIFICATION SIGNBOARD SECTIONS

PLATE 4

THIS PAGE HAS BEEN INTENTIONALLY LEFT BLANK

SECTION 01 57 19.00 20

TEMPORARY ENVIRONMENTAL CONTROLS
11/11

PART 1 GENERAL

1.1 REFERENCES

The publications listed below form a part of this specification to the extent referenced. The publications are referred to within the text by the basic designation only.

U.S. ENVIRONMENTAL PROTECTION AGENCY (EPA)

EPA 833-R-060-04	(2000) Developing Your Storm Water Pollution Prevention Plan, a Guide for Construction Sites

U.S. NATIONAL ARCHIVES AND RECORDS ADMINISTRATION (NARA)

29 CFR 1910	Occupational Safety and Health Standards
29 CFR 1910.120	Hazardous Waste Operations and Emergency Response
40 CFR 112	Oil Pollution Prevention
40 CFR 122.26	Storm Water Discharges (Applicable to State NPDES Programs, see section 123.25)
40 CFR 241	Guidelines for Disposal of Solid Waste
40 CFR 243	Guidelines for the Storage and Collection of Residential, Commercial, and Institutional Solid Waste
40 CFR 258	Subtitle D Landfill Requirements
40 CFR 260	Hazardous Waste Management System: General
40 CFR 261	Identification and Listing of Hazardous Waste
40 CFR 262	Standards Applicable to Generators of Hazardous Waste
40 CFR 263	Standards Applicable to Transporters of Hazardous Waste
40 CFR 264	Standards for Owners and Operators of Hazardous Waste Treatment, Storage, and Disposal Facilities
40 CFR 265	Interim Status Standards for Owners and Operators of Hazardous Waste Treatment, Storage, and Disposal Facilities

40 CFR 266	Standards for the Management of Specific Hazardous Wastes and Specific Types of Hazardous Waste Management Facilities
40 CFR 268	Land Disposal Restrictions
40 CFR 270	EPA Administered Permit Programs: The Hazardous Waste Permit Program
40 CFR 271	Requirements for Authorization of State Hazardous Waste Programs
40 CFR 272	Approved State Hazardous Waste Management Programs
40 CFR 273	Standards For Universal Waste Management
40 CFR 279	Standards for the Management of Used Oil
40 CFR 280	Technical Standards and Corrective Action Requirements for Owners and Operators of Underground Storage Tanks (UST)
40 CFR 300	National Oil and Hazardous Substances Pollution Contingency Plan
40 CFR 355	Emergency Planning and Notification
40 CFR 372-SUBPART D	Specific Toxic Chemical Listings
40 CFR 761	Polychlorinated Biphenyls (PCBs) Manufacturing, Processing, Distribution in Commerce, and Use Prohibitions
40 CFR 82	Protection of Stratospheric Ozone
49 CFR 171	General Information, Regulations, and Definitions
49 CFR 172	Hazardous Materials Table, Special Provisions, Hazardous Materials Communications, Emergency Response Information, and Training Requirements
49 CFR 173	Shippers - General Requirements for Shipments and Packagings
49 CFR 178	Specifications for Packagings

1.2 DEFINITIONS

1.2.1 Sediment

Soil and other debris that have eroded and have been transported by runoff water or wind.

1.2.2 Solid Waste

Garbage, refuse, debris, sludge, or other discharged material, including solid, liquid, semisolid, or contained gaseous materials resulting from domestic, industrial, commercial, mining, or agricultural operations. Types of solid waste typically generated at construction sites may include:

a. Green waste: The vegetative matter from landscaping, land clearing and grubbing, including, but not limited to, grass, bushes, scrubs, small trees and saplings, tree stumps and plant roots. Marketable trees, grasses and plants that are indicated to remain, be re-located, or be re-used are not included.

b. Surplus soil: Existing soil that is in excess of what is required for this work, including aggregates intended, but not used, for on-site mixing of concrete, mortars and paving. Contaminated soil meeting the definition of hazardous material or hazardous waste is not included.

c. Debris: Non-hazardous solid material generated during the construction, demolition, or renovation of a structure which exceeds 2.5 inch particle size that is: a manufactured object; plant or animal matter; or natural geologic material (e.g. cobbles and boulders), broken or removed concrete, masonry, and rock asphalt paving; ceramics; roofing paper and shingles. Inert materials may not be reinforced with or contain ferrous wire, rods, accessories and weldments. A mixture of debris and other material such as soil or sludge is also subject to regulation as debris if the mixture is comprised primarily of debris by volume, based on visual inspection.

d. Wood: Dimension and non-dimension lumber, plywood, chipboard, hardboard. Treated and/or painted wood that meets the definition of lead contaminated or lead based contaminated paint is not included.

e. Scrap metal: Scrap and excess ferrous and non-ferrous metals such as reinforcing steel, structural shapes, pipe and wire that are recovered or collected and disposed of as scrap. Scrap metal meeting the definition of hazardous material or hazardous waste is not included.

f. Paint cans: Metal cans that are empty of paints, solvents, thinners and adhesives. If permitted by the paint can label, a thin dry film may remain in the can.

g. Recyclables: Materials, equipment and assemblies such as doors, windows, door and window frames, plumbing fixtures, glazing and mirrors that are recovered and sold as recyclable. Metal meeting the definition of lead contaminated or lead based paint contaminated may not be included as recyclable if sold to a scrap metal company. Paint cans may not be included as recyclable if sold to a scrap metal company.

h. Hazardous Waste: By definition, to be a hazardous waste a material must first meet the definition of a solid waste. Hazardous waste and hazardous debris are special cases of solid waste. They have additional regulatory controls and must be handled separately. They are thus defined separately in this document.

Material not regulated as solid waste are: nuclear source or byproduct materials regulated under the Federal Atomic Energy Act of 1954 as amended; suspended or dissolved materials in domestic sewage effluent or irrigation return flows, or other regulated point source discharges;

regulated air emissions; and fluids or wastes associated with natural gas or crude oil exploration or production.

1.2.3 Hazardous Debris

As defined in Solid Waste paragraph, debris that contains listed hazardous waste (either on the debris surface, or in its interstices, such as pore structure) per 40 CFR 261; or debris that exhibits a characteristic of hazardous waste per 40 CFR 261.

1.2.4 Chemical Wastes

This includes salts, acids, alkalizes, herbicides, pesticides, and organic chemicals.

1.2.5 Garbage

Refuse and scraps resulting from preparation, cooking, dispensing, and consumption of food.

1.2.6 Hazardous Waste

Any discarded material, liquid, solid, or gas, which meets the definition of hazardous material or is designated hazardous waste by the Environmental Protection Agency or State Hazardous Control Authority as defined in 40 CFR 260, 40 CFR 261, 40 CFR 262, 40 CFR 263, 40 CFR 264, 40 CFR 265, 40 CFR 266, 40 CFR 268, 40 CFR 270, 40 CFR 271, 40 CFR 272, 40 CFR 273, 40 CFR 279, and 40 CFR 280.

1.2.7 Hazardous Materials

Hazardous materials as defined in 49 CFR 171 and listed in 49 CFR 172.

Hazardous material is any material that:

a. Is regulated as a hazardous material per 49 CFR 173, or

b. Requires a Material Safety Data Sheet (MSDS) per 29 CFR 1910.120, or

c. During end use, treatment, handling, packaging, storage, transpiration, or disposal meets or has components that meet or have potential to meet the definition of a hazardous waste as defined by 40 CFR 261 Subparts A, B, C, or D.

Designation of a material by this definition, when separately regulated or controlled by other instructions or directives, does not eliminate the need for adherence to that hazard-specific guidance which takes precedence over this instruction for "control" purposes. Such material include ammunition, weapons, explosive actuated devices, propellants, pyrotechnics, chemical and biological warfare materials, medical and pharmaceutical supplies, medical waste and infectious materials, bulk fuels, radioactive materials, and other materials such as asbestos, mercury, and polychlorinated biphenyls (PCBs). Nonetheless, the exposure may occur incident to manufacture, storage, use and demilitarization of these items.

1.2.8 Waste Hazardous Material (WHM)

Any waste material which because of its quantity, concentration, or physical, chemical, or infectious characteristics may pose a substantial

hazard to human health or the environment and which has been so designated. Used oil not containing any hazardous waste, as defined above, falls under this definition.

1.2.9 Oily Waste

Those materials which are, or were, mixed with used oil and have become separated from that used oil. Oily wastes also means materials, including wastewaters, centrifuge solids, filter residues or sludges, bottom sediments, tank bottoms, and sorbents which have come into contact with and have been contaminated by, used oil and may be appropriately tested and discarded in a manner which is in compliance with other State and local requirements.

This definition includes materials such as oily rags, "kitty litter" sorbent clay and organic sorbent material. These materials may be land filled provided that:

a. It is not prohibited in other State regulations or local ordinances

b. The amount generated is "de minimus" (a small amount)

c. It is the result of minor leaks or spills resulting from normal process operations

d. All free-flowing oil has been removed to the practical extent possible

Large quantities of this material, generated as a result of a major spill or in lieu of proper maintenance of the processing equipment, are a solid waste. As a solid waste, a hazardous waste determination must be performed prior to disposal. As this can be an expensive process, it is recommended that this type of waste be minimized through good housekeeping practices and employee education.

1.2.10 Regulated Waste

Those solid waste that have specific additional Federal, state, or local controls for handling, storage, or disposal.

1.2.11 Class I Ozone Depleting Substance (ODS)

Class I ODS is defined in Section 602(a) of The Clean Air Act and includes the following chemicals:

chlorofluorocarbon-11 (CFC-11)
chlorofluorocarbon-12 (CFC-12)
chlorofluorocarbon-13 (CFC-13)
chlorofluorocarbon-111 (CFC-111)
chlorofluorocarbon-112 (CFC-112)
chlorofluorocarbon-113 (CFC-113)

chlorofluorocarbon-114 (CFC-114)
chlorofluorocarbon-115 (CFC-115)
chlorofluorocarbon-211 (CFC-211)
chlorofluorocarbon-212 (CFC-212)
chlorofluorocarbon-213 (CFC-213)
chlorofluorocarbon-214 (CFC-214)
chlorofluorocarbon-215 (CFC-215)
chlorofluorocarbon-216 (CFC-216)
chlorofluorocarbon-217 (CFC-217)
chlorofluorocarbon-500 (CFC-500)
chlorofluorocarbon-502 (CFC-502)
chlorofluorocarbon-503 (CFC-503)
halon-1211
halon-1301
halon-2402
carbon tetrachloride
methyl bromide
methyl chloroform

Class II ODS is defined in Section 602(s) of The Clean Air Act and includes the following chemicals:

hydrochlorofluorocarbon-21 (HCFC-21)
hydrochlorofluorocarbon-22 (HCFC-22)
hydrochlorofluorocarbon-31 (HCFC-31)
hydrochlorofluorocarbon-121 (HCFC-121)
hydrochlorofluorocarbon-122 (HCFC-122)
hydrochlorofluorocarbon-123 (HCFC-123)
hydrochlorofluorocarbon-124 (HCFC-124)

hydrochlorofluorocarbon-131 (HCFC-131)
hydrochlorofluorocarbon-132 (HCFC-132)
hydrochlorofluorocarbon-133 (HCFC-133)
hydrochlorofluorocarbon-141 (HCFC-141)
hydrochlorofluorocarbon-142 (HCFC-142)
hydrochlorofluorocarbon-221 (HCFC-221)
hydrochlorofluorocarbon-222 (HCFC-222)
hydrochlorofluorocarbon-223 (HCFC-223)
hydrochlorofluorocarbon-224 (HCFC-224)
hydrochlorofluorocarbon-225 (HCFC-225)
hydrochlorofluorocarbon-226 (HCFC-226)
hydrochlorofluorocarbon-231 (HCFC-231)
hydrochlorofluorocarbon-232 (HCFC-232)
hydrochlorofluorocarbon-233 (HCFC-233)
hydrochlorofluorocarbon-234 (HCFC-234)
hydrochlorofluorocarbon-235 (HCFC-235)
hydrochlorofluorocarbon-251 (HCFC-251)
hydrochlorofluorocarbon-252 (HCFC-252)
hydrochlorofluorocarbon-253 (HCFC-253)
hydrochlorofluorocarbon-261 (HCFC-261)
hydrochlorofluorocarbon-262 (HCFC-262)
hydrochlorofluorocarbon-271 (HCFC-271)

1.2.11.1 Universal Waste

The universal waste regulations streamline collection requirements for certain hazardous wastes in the following categories: batteries, pesticides, mercury-containing equipment (e.g., thermostats) and lamps (e.g., fluorescent bulbs). The rule is designed to reduce hazardous waste in the municipal solid waste (MSW) stream by making it easier for universal waste handlers to collect these items and send them for recycling or proper disposal. These regulations can be found at 40 CFR 273.

1.3 SUBMITTALS

Government approval is required for submittals with a "G" designation; submittals not having a "G" designation are for Contractor Quality Control approval. The following shall be submitted in accordance with Section 01 33 00.05 20 CONSTRUCTION SUBMITTAL PROCEDURES:

SD-01 Preconstruction Submittals

Preconstruction Survey; G

Solid Waste Management Plan and Permit; G

Regulatory Notifications; G

Environmental Management Plan; G

Storm Water Pollution Prevention Plan; G

Storm Water Notice of Intent (for NPDES coverage under the general permit for construction activities); G

Dirt and Dust Control Plan

Contractor Hazardous Material Inventory Log; G

SD-06 Test Reports

Laboratory Analysis

Disposal Requirements

Erosion and Sediment Control Inspection Reports

Storm Water Inspection Reports for General Permit

Contractor 40 CFR employee training records

Solid Waste Management Report; G

SD-11 Closeout Submittals

Some of the records listed below are also required as part of other submittals. For the "Records" submittal, maintain on-site a separate three-ring Environmental Records binder and submit at the completion of the project. Make separate parts to the binder corresponding to each of the applicable sub items listed below.

Storm Water Pollution Prevention Plan compliance notebook; G

Waste Determination Documentation

Disposal Documentation for Hazardous and Regulated Waste

Contractor 40 CFR Employee Training Records

Solid Waste Management Permit

Solid Waste Management Report

Contractor Hazardous Material Inventory Log; G

Hazardous Waste/Debris Management

Regulatory Notifications

1.4 ENVIRONMENTAL PROTECTION REQUIREMENTS

Provide and maintain, during the life of the contract, environmental protection as defined. Plan for and provide environmental protective measures to control pollution that develops during normal construction practice. Plan for and provide environmental protective measures required to correct conditions that develop during the construction of permanent or temporary environmental features associated with the project. Comply with Federal, State, and local regulations pertaining to the environment, including water, air, solid waste, hazardous waste and substances, oily substances, and noise pollution.

The Contractor may be required to promptly conduct tests and procedures for the purpose of assessing whether construction operations are in compliance with Applicable Environmental Laws. Analytical work shall be done by qualified laboratories; and where required by law, the laboratories shall be certified.

1.4.1 Environmental Compliance Assessment Training and Tracking System (ECATTS)

The QC Manager is responsible for environmental compliance on projects unless an Environmental Manager is named. The QC Manager (and alternative QC Manager) or Environmental Manager shall complete ECATTS training prior to starting respective portions of on-site work under this contract. If personnel changes occur for any of these positions after starting work, replacement personnel shall complete ECATTS training within 14 days of assignment to the project

Submit an ECATTS certificate of completion for personnel who have completed the required "Environmental Compliance Assessment Training and Tracking System (ECATTS)" training. This training is web-based and can be accessed from any computer with Internet access using the following instructions.

Register for NAVFAC Environmental Compliance Training and Tracking System, by logging on to http://navfac.ecatts.com/. Obtain the password for registration from the Contracting Officer.

This training has been structured to allow contractor personnel to receive credit under this contract and also to carry forward credit to future contracts. Contractors shall ensure that the QC Manager (and alternate QC Manager) or Environmental Manager review their training plans for new modules or updated training requirements prior to beginning work. Some training modules are tailored for specific State regulatory requirements; therefore, Contractors working in multiple states will be requires to re-take modules tailored to the state where the contract work is being performed.

ECATTS is available for use by all contractor and subcontractor personnel associated with this project. These other personnel are encouraged (but not required) to take the training and may do so at their discretion.

1.4.2 Conformance with the Environmental Management System

The Contractor shall perform work under this contract consistent with the policy and objectives identified in the installation's Environmental Management System (EMS). The Contractor shall perform work in a manner that conforms to objectives and targets, environmental programs and operational controls identified by the EMS. The Contractor will provide monitoring and measurement information as necessary to address environmental performance relative to environmental, energy, and transportation management goals. In the event an EMS nonconformance or environmental noncompliance associated with the contracted services, tasks, or actions occurs, the Contractor shall take corrective and/or preventative actions. In addition, the Contractor shall ensure that its employees are aware of their roles and responsibilities under the EMS and how these EMS roles and responsibilities affect work performed under the contract.

The Contractor is responsible for ensuring that their employees receive applicable environmental and occupational health and safety training, and keep up to date on regulatory required specific training for the type of work to be conducted onsite. All on-site Contractor personnel, and their subcontractor personnel, performing tasks that have the potential to cause a significant environmental impact shall be competent on the basis of appropriate education, training or experience. Upon contract award, the Contracting Officer's Representative will notify the installation's EMS coordinator to arrange EMS training. The installation's EMS coordinator shall identify training needs associated with environmental aspects and the EMS, and arrange training or take other action to meet these needs. The Contractor shall provide training documentation to the Contracting Officer. The EMS coordinator shall retain associated records.

1.5 QUALITY ASSURANCE

1.5.1 Preconstruction Survey

Perform a Preconstruction Survey of the project site with the Contracting Officer, and take photographs showing existing environmental conditions in and adjacent to the site. Submit a report for the record.

1.5.2 Regulatory Notifications

The Contractor is responsible for all regulatory notification requirements in accordance with Federal, State and local regulations. In cases where the Navy must also provide public notification (such as stormwater permitting), the Contractor must coordinate with the Contracting Officer. The Contractor shall submit copies of all regulatory notifications to the Contracting Officer prior to commencement of work activities. Typically, regulatory notifications must be provided for the following (this listing is not all inclusive): demolition, renovation, NPDES defined site work, remediation of controlled substances (asbestos, hazardous waste, lead paint).

1.5.3 Environmental Brief

Attend an environmental brief to be included in the preconstruction meeting. Provide the following information: types, quantities, and use of hazardous materials that will be brought onto the activity; types and quantities of wastes/wastewater that may be generated during the contract. Discuss the results of the Preconstruction Survey at this time.

Prior to initiating any work on site, meet with the Contracting Officer and activity environmental staff to discuss the proposed Environmental Management Plan. Develop a mutual understanding relative to the details of environmental protection, including measures for protecting natural resources, required reports, required permits, permit requirements, and other measures to be taken.

1.5.4 Environmental Manager

Appoint in writing an Environmental Manager for the project site. The Environmental Manager will be directly responsible for coordinating contractor compliance with Federal, State, local, and station requirements. The Environmental Manager will ensure compliance with Hazardous Waste Program requirements (including hazardous waste handling, storage, manifesting, and disposal); implement the Environmental Management Plan; ensure that all environmental permits are obtained, maintained, and closed out; ensure compliance with Storm Water Program Management requirements; ensure compliance with Hazardous Materials (storage, handling, and reporting) requirements; and coordinate any remediation of regulated substances (lead, asbestos, PCB transformers). This can be a collateral position; however the person in this position must be trained to adequately accomplish the following duties: ensure waste segregation and storage compatibility requirements are met; inspect and manage Satellite Accumulation areas; ensure only authorized personnel add wastes to containers; ensure all Contractor personnel are trained in 40 CFR requirements in accordance with their position requirements; coordinate removal of waste containers; and maintain the Environmental Records binder and required documentation, including environmental permits compliance and close-out.

1.5.5 Contractor 40 CFR Employee Training Records

Prepare and maintain employee training records throughout the term of the contract meeting applicable 40 CFR requirements. The Contractor will ensure every employee completes a program of classroom instruction or on-the-job training that teaches them to perform their duties in a way that ensures compliance with Federal, State and local regulatory requirements for RCRA Large Quantity Generator. The Contractor will provide a Position Description for each employee, by subcontractor, based on the Davis-Bacon Wage Rate designation or other equivalent method, evaluating the employee's association with hazardous and regulated wastes. This Position Description will include training requirements as defined in 40 CFR 265 for a Large Quantity Generator facility. Submit these training records to the Contracting Officer at the conclusion of the project, unless otherwise directed.

PART 2 PRODUCTS

Not Used

PART 3 EXECUTION

3.1 ENVIRONMENTAL MANAGEMENT PLAN

Prior to initiating any work on site, the Contractor will meet with the Contracting Officer to discuss the proposed Environmental Protection Plan and develop a mutual understanding relative to the details of environmental protection, including measures for protecting natural resources, required reports, and other measures to be taken. The Contractor's Environmental

Plan shall incorporate construction related objectives and targets from the installation's Environmental Management System. The Environmental Management Plan will be submitted in the following format and shall include the elements specified below.

a. Description of the Environmental Management Plan

(1) General overview and purpose

(a) A brief description of each specific plan required by environmental permit or elsewhere in this contract.

(b) The duties and level of authority assigned to the person(s) on the job site that oversee environmental compliance.

(c) A copy of any standard or project specific operating procedures that will be used to effectively manage and protect the environment on the project site.

(d) Communication and training procedures that will be used to convey environmental management requirements to contractor employees and subcontractors.

(e) Emergency contact information contact information (office phone number, cell phone number, and e-mail address).

(2) General site information

(3) A letter signed by an officer of the firm appointing the Environmental Manager and stating that he/she is responsible for managing and implementing the Environmental Program as described in this contract. Include in this letter the Environmental Manager's authority to direct the removal and replacement of non-conforming work.

b. Management of Natural Resources

(1) Land resources

(2) Tree protection

(3) Replacement of damaged landscape features

(4) Temporary construction

(5) Stream crossings

(6) Fish and wildlife resources

(7) Wetland areas

c. Protection of Historical and Archaeological Resources

(1) Objectives

(2) Methods

d. Storm Water Management and Control

(1) Ground cover

(2) Erodible soils

(3) Temporary measures

(a) Mechanical retardation and control of runoff

(b) Vegetation and mulch

(4) Effective selection, implementation and maintenance of Best Management Practices (BMPs).

e. Protection of the Environment from Waste Derived from Contractor Operations

(1) Control and disposal of solid and sanitary waste. If Section 01 74 19.05 20 is included in the contract, submit the plan required by that section as part of the Environmental Management Plan.

(2) Control and disposal of hazardous waste (Hazardous Waste Management Section)

This item will consist of the management procedures for all hazardous waste to be generated. The elements of those procedures will coincide with the Activity Hazardous Waste Management Plan. A copy of the Activity Hazardous Waste Management Plan will be provided by the Contracting Officer. As a minimum, include the following:

(a) Procedures to be employed to ensure a written waste determination is made for appropriate wastes which are to be generated;

(b) Sampling/analysis plan;

(c) Methods of hazardous waste accumulation/storage (i.e., in tanks and/or containers);

(d) Management procedures for storage, labeling, transportation, and disposal of waste (treatment of waste is not allowed unless specifically noted);

(e) Management procedures and regulatory documentation ensuring disposal of hazardous waste complies with Land Disposal Restrictions (40 CFR 268);

(f) Management procedures for recyclable hazardous materials such as lead-acid batteries, used oil, and the like;

(g) Used oil management procedures in accordance with 40 CFR 279;

(h) Pollution prevention\hazardous waste minimization procedures;

(i) Plans for the disposal of hazardous waste by permitted facilities;

(j) Procedures to be employed to ensure all required employee training records are maintained.

f. Prevention of Releases to the Environment

(1) Procedures to prevent releases to the environment

(2) Notifications in the event of a release to the environment

g. Regulatory Notification and Permits

List what notifications and permit applications must be made. Demonstrate that those permits have been obtained by including copies of all applicable, environmental permits.

3.1.1 Environmental Protection Plan Review

Within thirty days after the Contract award date, submit the proposed Environmental Management Plan for further discussion, review, and approval. Commencement of work will not begin until the environmental management plan has been approved.

3.1.2 Licenses and Permits

Obtain licenses and permits pursuant to the "Permits and Responsibilities" FAR Clause 52.236-7.

No permits will be obtained by the Contracting Officer.

Where required by the State regulatory authority, the inspections and certifications will be provided through the services of a Professional Engineer (PE), registered in the State where the work is being performed. As a part of the quality control plan, which is required to be submitted for approval by the quality control section, provide a sub item containing the name, appropriate professional registration or licence number, address, and telephone number of the professionals or other qualified persons who will be performing the inspections and certifications for each permit.

3.2 PROTECTION OF NATURAL RESOURCES

Preserve the natural resources within the project boundaries and outside the limits of permanent work. Restore to an equivalent or improved condition upon completion of work. Confine construction activities to within the limits of the work indicated or specified. If the work is near streams, lakes, or other waterways, conform to the national permitting requirements of the Clean Water Act.

Do not disturb fish and wildlife. Do not alter water flows or otherwise significantly disturb the native habitat adjacent to the project and critical to the survival of fish and wildlife, except as indicated or specified.

Except in areas to be cleared, do not remove, cut, deface, injure, or destroy trees or shrubs without the Contracting Officer's permission. Do not fasten or attach ropes, cables, or guys to existing nearby trees for anchorages unless authorized by the Contracting Officer. Where such use of attached ropes, cables, or guys is authorized, the Contractor will be responsible for any resultant damage.

Protect existing trees which are to remain and which may be injured, bruised, defaced, or otherwise damaged by construction operations. Remove

displaced rocks from uncleared areas. By approved excavation, remove trees with 30 percent or more of their root systems destroyed. Remove trees and other landscape features scarred or damaged by equipment operations, and replace with equivalent, undamaged trees and landscape features. Obtain Contracting Officer's approval before replacement.

The Contracting Officer's approval is required before any equipment will be permitted to ford live streams. In areas where frequent crossings are required, install temporary culverts or bridges. Obtain Contracting Officer's approval prior to installation. Remove temporary culverts or bridges upon completion of work, and repair the area to its original condition unless otherwise required by the Contracting Officer.

3.2.1 Erosion and Sediment Control Measures

3.2.1.1 Burnoff

Burnoff of the ground cover is not permitted.

3.2.1.2 Protection of Erodible Soils

Immediately finish the earthwork brought to a final grade, as indicated or specified. Immediately protect the side slopes and back slopes upon completion of rough grading. Plan and conduct earthwork to minimize the duration of exposure of unprotected soils.

3.2.1.3 Temporary Protection of Erodible Soils

Use the following methods to prevent erosion and control sedimentation:

a. Mechanical Retardation and Control of Runoff

Mechanically retard and control the rate of runoff from the construction site. This includes construction of diversion ditches, benches, berms, and use of silt fences and straw bales to retard and divert runoff to protected drainage courses.

b. Sediment Basins

(1) Trap sediment in temporary sediment basins. Select a basin size to accommodate the runoff of a local 25-year storm. Pump dry and remove the accumulated sediment, after each storm. Use a paved weir or vertical overflow pipe for overflow. Remove collected sediment from the site. Institute effluent quality monitoring programs.

(2) Install, inspect, and maintain best management practices (BMPs) as required by the general permit. Prepare BMP Inspection Reports as required by the general permit. If required by the permit, include those inspection reports.

c. Vegetation and Mulch

(1) Provide temporary protection on sides and back slopes as soon as rough grading is completed or sufficient soil is exposed to require erosion protection. Protect slopes by accelerated growth of permanent vegetation, temporary vegetation, mulching, or netting. Stabilize slopes by hydroseeding, anchoring mulch in place, covering with anchored netting, sodding, or such

combination of these and other methods necessary for effective erosion control.

(2) Seeding: Provide new seeding where ground is disturbed. Include topsoil or nutriment during the seeding operation necessary to establish or reestablish a suitable stand of grass.

3.2.2 Erosion and Sediment Control Inspection Reports

Submit "Erosion and Sediment Control Inspection Reports" (E&S) (form provided at the pre-construction conference) and Storm Water Inspection Reports for General Permit for General Permit to the Contracting Officer once every 7 calendar days and within 24 hours of a storm event that produces 0.5 inch or more of rain.

Note erosion control inspection reports may be compiled as part of a stormwater pollution prevention plan inspection reports if applicable.

3.2.2.1 Storm Water Notice of Intent for Construction Activities and Storm Water Pollution Prevention Plan

The Contractor shall submit a Storm Water Notice of Intent (for NPDES coverage under the general permit for construction activities for projects greater than or equal to 1 acre of disturbed area) and a Storm Water Pollution Prevention Plan (SWPPP), Stormwater Management Plan (SWMP), or similar State-required document to the Contracting Officer and gain approval from the Installation Environmental Program Manager (IEPM) prior to the commencement of work. The SWPPP/SWMP will meet the requirements of the EPA or State general permit for storm water discharges from construction sites. It will also conform to the 2007 Navy Low Impact Development (LID) Policy (which sets a goal of "no net increase in stormwater runoff volume and sediment or nutrient loading from major renovation and construction projects" - to be achieved through the use of Low Impact Development techniques and features), and the 2007 Energy Independence and Security Act (EISA), Section 438 (which requires all Federal facility development or redevelopment projects with a footprint of 5,000 sq. ft. to maintain or restore the predevelopment hydrology of the property). It has been determined that LID is feasible for this project and the contractor shall not submit a NAVFAC Washington LID Waiver Request unless this action is approved by the Contracting Officer.

Submit the SWPPP/SWMP along with any required Notice of Intents, Sign Transfer of Authorization form(s), Water Quality Banking Summary Sheet and appropriate permit fees, via the Contracting Officer for review and signature of the Installation Environmental Program Manager (IEPM), then to the appropriate Federal or State agency for approval, a minimum of 45 calendar days prior to the start of any land disturbing activities. The Contractor shall maintain an approved copy of the SWPPP/SWMP at the construction on-site office, and continually update it as regulations require, reflecting current site conditions. For projects requiring a General Permit, the Contractor shall maintain an Inspection Log Book as required by permit. Additional requirements may be found in UFGS section 01 57 19.01 20, Supplemental Temporary Environmental Controls.

Coverage under this permit requires the contractor prepare a Storm Water Pollution Prevention Plan (SWPPP), prepare and submit a Registration Statement as a co-permittee with the Construction Officer, and provide the permit fee to the responsible state agency before any land disturbing activities begin. The contractor shall file for permit coverage on behalf

Construction Officer and himself and file a Notice of Termination once construction is complete and the site is stabilized with a final sustainable cover.

Under the terms and conditions of the permit, the Contractor may be required to install, inspect, maintain best management practices (BMPs), and submit stormwater BMP inspection reports and stormwater pollution prevention plan inspection reports. The Contractor shall ensure construction operations and management are constantly in compliance with the terms and conditions of the general permit for storm water discharges from construction activities.

a. The SWPPP shall:

(1) Identify potential sources of pollution which may be reasonably expected to affect the quality of storm water discharge from the site.

(2) Describe and ensure implementation of practices which will be used to reduce the pollutants in storm water discharge from the site.

(3) Ensure compliance with terms of the EPA or State general permit for storm water discharge.

(4) Select applicable best management practices from EPA 833-R-060-04.

(5) Include a completed copy of the Registration Statement, BMP Inspection Report Template and Notice of Termination except for the effective date.

(6) Storm Water Pollution Prevention Measures and Notice of Intent 40 CFR 122.26, EPA 833-R-060-04. Provide a "Storm Water Pollution Prevention Plan" (SWPPP) for the project. The SWPPP will meet the requirements of the EPA or State general permit for storm water discharges from construction sites. Submit the SWPPP along with any required Notice of Intents, Notice of Termination, and appropriate permit fees, via the Contracting Officer, to the appropriate Federal or State agency for approval, a minimum of 14 calendar days prior to the start of construction. A copy of the approved SWPPP will be kept at the construction on-site office, and continually updated as regulations require reflecting current site conditions.

3.2.2.2 Storm Water Pollution Prevention Plan Compliance Notebook

The contractor shall create and maintain a three binder of documents that demonstrate compliance with the Stormwater Construction Activity permit. The binder shall include a copy of the permit Registration Statement, proof of permit fee payment, SWPPP and SWPPP update amendments, inspection reports, copies of correspondence with the Virginia DCR and a copy of the permit Notice of Termination. At the completion of the project the folder shall become the property of the Government. The compliance notebook shall be provided to Contracting Officer. An advance copy of the Registration Statement shall be provided to the Contracting Officer immediately after the form is presented to the permitting agency.

3.2.3 Stormwater Drainage and Construction Dewatering

There will be no discharge of excavation ground water to the sanitary sewer, storm drains, or to the river without prior specific authorization of the Environmental Division in writing. Discharge of hazardous substances will not be permitted under any circumstances.

Construction site runoff will be prevented from entering any storm drain or the river directly by the use of straw bales or other method suitable to the Environmental Division. Contractor will provide erosion protection of the surrounding soils.

Construction Dewatering shall not be discharged to the sanitary sewer. If the construction dewatering is noted or suspected of being contaminated, it may only be released to the storm drain system if the discharge is specifically permitted. Authorization for any contaminated groundwater release shall be obtained in advance from the base Environmental Officer. Discharge of hazardous substances will not be permitted under any circumstances.

3.3 HISTORICAL AND ARCHAEOLOGICAL RESOURCES

Carefully protect in-place and report immediately to the Contracting Officer historical and archaeological items or human skeletal remains discovered in the course of work. Upon discovery, notify the Contracting Officer. Stop work in the immediate area of the discovery until directed by the Contracting Officer to resume work. The Government retains ownership and control over historical and archaeological resources. Historical use of this area may have included the use of munitions including potential unexploded ordnance. The contractor shall undergo awareness training for munitions (typical provided by Explosive Ordnance Disposal - EOD) and be aware of the proper procedure for the management of any unidentified munitions objects found on site during investigation and/or construction activities. The contractor shall contact Range Control through the ROICC Contracting Officer for the EOD brief. The Contractor shall contact Range control through the ROICC Contracting Officer for the EOD brief.

3.4 SOLID WASTE MANAGEMENT PLAN and PERMIT

Provide to the contracting officer written notification of the quantity of solid waste/debris that is anticipated to be generated by construction. Include in the report the locations where various types of waste will be disposed or recycled. Include letters of acceptance or as applicable, submit one copy of a State and local Solid Waste Management Permit or license showing such agency's approval of the disposal plan before transporting wastes off Government property.

3.4.1 Solid Waste Management Report

Monthly, submit a solid waste disposal report to the Contracting Officer. For each waste, the report will state the classification (using the definitions provided in this section), amount, location, and name of the business receiving the solid waste.

The Contractor will include copies of the waste handling facilities' weight tickets, receipts, bills of sale, and other sales documentation. In lieu of sales documentation, the Contractor may submit a statement indicating the disposal location for the solid waste which is signed by an officer of

the Contractor firm authorized to legally obligate or bind the firm. The sales documentation or Contractor certification will include the receiver's tax identification number and business, EPA or State registration number, along with the receiver's delivery and business addresses and telephone numbers. For each solid waste retained by the Contractor for his own use, the Contractor will submit on the solid waste disposal report the information previously described in this paragraph. Prices paid or received will not be reported to the Contracting Officer unless required by other provisions or specifications of this Contract or public law.

For each solid waste retained by the Contractor for his own use, the Contractor will submit on the solid waste disposal report the information previously described in this paragraph. Prices paid or received will not be reported to the Contracting Officer unless required by other provisions or specifications of this Contract or public law.

Reports of waste generated (including recycling), including material type (CDD, concrete, scrap metal, used oil, etc), tons, disposal destination and disposal cost shall be reported on the Construction Waste Management Report (included in Part 6 of this RFP) to NREA within 30 days of the close of a project, and no later than Oct 15 to be included in annual report submissions. Please fax the attached Construction Waste Management Report to (703) 784-4953. POC, Mr. Bhasker Thaker, 703-432-0531, bhasker.thaker@usmc.mil.

3.4.2 Control and Management of Solid Wastes

Pick up solid wastes, and place in covered containers which are regularly emptied. Do not prepare or cook food on the project site. Prevent contamination of the site or other areas when handling and disposing of wastes. At project completion, leave the areas clean. Recycling is encouraged and can be coordinated with the Contracting Officer and the activity recycling coordinator. Remove all solid waste (including non-hazardous debris) from Government property and dispose off-site at an approved landfill. Solid waste disposal off-site must comply with most stringent local, State, and Federal requirements including 40 CFR 241, 40 CFR 243, and 40 CFR 258.

Manage spent hazardous material used in construction, including but not limited to, aerosol cans, waste paint, cleaning solvents, contaminated brushes, and used rags, as per environmental law.

3.4.2.1 Dumpsters

Equip dumpsters with a secure cover and paint the standard base color. Keep cover closed at all times, except when being loaded with trash and debris. Locate dumpsters behind the construction fence or out of the public view. Empty site dumpsters at least once a week. or as needed to keep the site free of debris and trash. If necessary, provide 55 gallon trash containers painted the darker base color to collect debris in the construction site area. Locate the trash containers behind the construction fence or out of the public view. Empty trash containers at least once a day. For large demolitions, large dumpsters without lids are acceptable but should not have debris higher than the sides before emptying.

3.5 WASTE DETERMINATION DOCUMENTATION

Complete a Waste Determination form (provided at the pre-construction conference) for all contractor derived wastes to be generated. Base the

waste determination upon either a constituent listing from the manufacturer used in conjunction with consideration of the process by which the waste was generated, EPA approved analytical data, or laboratory analysis (Material Safety Data Sheets (MSDS) by themselves are not adequate). Attach all support documentation to the Waste Determination form. As a minimum, a Waste Determination form must be provided for the following wastes (this listing is not all inclusive): oil and latex based painting and caulking products, solvents, adhesives, aerosols, petroleum products, and all containers of the original materials.

3.6 CONTRACTOR HAZARDOUS MATERIAL INVENTORY LOG

Submit the "Contractor Hazardous Material Inventory Log"(found at: http://www.wbdg.org/ccb/NAVGRAPH/graphtoc.pdf), which provides information required by (EPCRA Sections 312 and 313) along with corresponding Material Safety Data Sheets (MSDS) to the Contracting Officer at the start and at the end of construction (30 days from final acceptance), and update no later than January 31 of each calendar year during the life of the contract. Documentation for any spills/releases, environmental reports or off-site transfers may be requested by the Contracting Officer.

3.6.1 Disposal Documentation for Hazardous and Regulated Waste

Manifest, pack, ship and dispose of hazardous or toxic waste and universal waste that is generated as a result of construction in accordance with the generating facilities generator status under the Recourse Conservation and Recovery Act. Contact the Contracting Officer for the facility RCRA identification number that is to be used on each manifest.

Submit a copy of the applicable EPA and or State permit(s), manifest(s), or license(s) for transportation, treatment, storage, and disposal of hazardous and regulated waste by permitted facilities. Hazardous or toxic waste manifest must be reviewed, signed, and approved by the Navy before the Contractor may ship waste. To obtain specific disposal instructions the Contractor must coordinate with the Activity environmental office.

A waste profile with supporting lab results must be sent to the Environmental Compliance Section at the beginning of any project that results in waste disposal. Contact Bhasker Thaker at (703)432-0531 or James Ward at (703)432-0527 for a copy of the Manifest Standard Operating Procedure (SOP) at the beginning of any project that results in waste disposal. All hazardous waste is to be removed from MCB Quantico within 60 days whenever possible. Submit a copy of the applicable EPA and State permit(s), manifest(s), or license(s) for transportation, treatment, storage, and disposal of hazardous and regulated waste by permitted facilities. All hazardous waste handling and disposal must be coordinated with the Base's Natural Resources and Environmental Affairs Branch (NREAB) at (703)784-4030/432-0530/432-0531. A preliminary copy of the manifest and LDR shall be forwarded to the Environmental Compliance Section of NREAB at least 24 hours prior to waste pickup. Only authorized personnel from the NREAB have the authority to sign Hazardous Waste Manifests.

3.7 POLLUTION PREVENTION/HAZARDOUS WASTE MINIMIZATION

Minimize the use of hazardous materials and the generation of hazardous waste. Include procedures for pollution prevention/ hazardous waste minimization in the Hazardous Waste Management Section of the Environmental Management Plan. Consult with the activity Environmental Office for suggestions and to obtain a copy of the installation's pollution

prevention/hazardous waste minimization plan for reference material when preparing this part of the plan. If no written plan exists, obtain information by contacting the Contracting Officer. Describe the types of the hazardous materials expected to be used in the construction when requesting information.

3.8 WHM/HW MATERIALS PROHIBITION

No waste hazardous material or hazardous waste shall be disposed of on government property. No hazardous material shall be brought onto government property that does not directly relate to requirements for the performance of this contract. The government is not responsible for disposal of Contractor's waste material brought on the job site and not required in the performance of this contract. The intent of this provision is to dispose of that waste identified as waste hazardous material/hazardous waste as defined herein that was generated as part of this contract and existed within the boundary of the Contract limits and not brought in from offsite by the Contractor. Incidental materials used to support the contract including, but not limited to aerosol cans, waste paint, cleaning solvents, contaminated brushes, rags, clothing, etc. are the responsibility of the Contractor. The list is illustrative rather than inclusive. The Contractor is not authorized to discharge any materials to sanitary sewer, storm drain, or to the river or conduct waste treatment or disposal on government property without written approval of the Contracting Officer.

3.9 HAZARDOUS MATERIAL MANAGEMENT

No hazardous material shall be brought onto government property that does not directly relate to requirements for the performance of this contract.

Include hazardous material control procedures in the Safety Plan. Address procedures and proper handling of hazardous materials, including the appropriate transportation requirements. Submit a MSDS and estimated quantities to be used for each hazardous material to the Contracting Officer prior to bringing the material on base. Typical materials requiring MSDS and quantity reporting include, but are not limited to, oil and latex based painting and caulking products, solvents, adhesives, aerosol, and petroleum products. At the end of the project, provide the Contracting Officer with the maximum quantity of each material that was present at the site at any one time, the dates the material was present, the amount of each material that was used during the project, and how the material was used. Ensure that hazardous materials are utilized in a manner that will minimize the amount of hazardous waste that is generated. Ensure that all containers of hazardous materials have NFPA labels or their equivalent. Keep copies of the MSDS for hazardous materials on site at all times and provide them to the Contracting Officer at the end of the project. Certify that all hazardous materials removed from the site are hazardous materials and do not meet the definition of hazardous waste per 40 CFR 261.

3.10 PETROLEUM PRODUCTS AND REFUELING

Conduct the fueling and lubricating of equipment and motor vehicles in a manner that protects against spills and evaporation. Manage all used oil generated on site in accordance with 40 CFR 279. Determine if any used oil generated while on-site exhibits a characteristic of hazardous waste. Used oil containing 1000 parts per million of solvents will be considered a hazardous waste and disposed of at Contractor's expense. Used oil mixed

with a hazardous waste will also be considered a hazardous waste.

3.10.1 Oily and Hazardous Substances

Prevent oil or hazardous substances from entering the ground, drainage areas, or navigable waters. In accordance with 40 CFR 112, surround all temporary fuel oil or petroleum storage tanks with a temporary berm or containment of sufficient size and strength to contain the contents of the tanks, plus 10 percent freeboard for precipitation. The berm will be impervious to oil for 72 hours and be constructed so that any discharge will not permeate, drain, infiltrate, or otherwise escape before cleanup occurs.

3.10.2 Inadvertent Discovery of Petroleum Contaminated Soil or Hazardous Wastes

If petroleum contaminated soil or suspected hazardous waste is found during construction that was not identified in the contract documents, the contractor shall immediately notify the contracting officer. The contractor shall not disturb this material until authorized by the contracting officer.

3.11 FUEL TANKS

Petroleum products and lubricants required to sustain up to 30 days of construction activity may be kept on site. Storage and refilling practices shall comply with 40 CFR Part 112. Secondary containment shall be provided and be no less than 110 percent of the tank volume plus five inches of free-board. If a secondary berm is used for containment then the berm shall be impervious to oil for 72 hours and be constructed so that any discharge will not permeate, drain, infiltrate, or otherwise escape before cleanup occurs. Drips pans are required and the tanks must be covered during inclement weather.

3.12 RELEASES/SPILLS OF OIL AND HAZARDOUS SUBSTANCES

Exercise due diligence to prevent, contain, and respond to spills of hazardous material, hazardous substances, hazardous waste, sewage, regulated gas, petroleum, lubrication oil, and other substances regulated by environmental law. Maintain spill cleanup equipment and materials at the work site.

In the event of a spill, take prompt, effective action to stop, contain, curtail, or otherwise limit the amount, duration, and severity of the spill/release. In the event of any releases of oil and hazardous substances, chemicals, or gases; immediately (within 15 minutes) notify the Base or Activity Fire Department by calling 911, the activity's Command Duty Officer, the Contracting Officer and Environmental Compliance Section of NREAB at (703) 789-4030. If the contractor's response is inadequate, the Navy may respond. If this should occur, the contractor will be required to reimburse the government for spill response assistance and analysis.

The Contractor is responsible for verbal and written notifications as required by the federal 40 CFR 355, State, local regulations and Navy Instructions. Spill response will be in accordance with 40 CFR 300 and applicable State and local regulations. Contain and clean up these spills without cost to the Government. If Government assistance is requested or required, the Contractor will reimburse the Government for such

assistance. Provide copies of the written notification and documentation that a verbal notification was made within 20 days.

Maintain spill cleanup equipment and materials at the work site. Clean up all hazardous and non-hazardous (WHM) waste spills. The Contractor shall reimburse the government for all material, equipment, and clothing generated during any spill cleanup. The Contractor shall reimburse the government for all costs incurred including sample analysis materials, equipment, and labor if the government must initiate its own spill cleanup procedures, for Contractor responsible spills, when:

a. The Contractor has not begun spill cleanup procedure within one hour of spill discovery/occurrence, or

b. If, in the government's judgment, the Contractor's spill cleanup is not adequately abating life threatening situation and/or is a threat to any body of water or environmentally sensitive areas.

3.13 CONTROL AND MANAGEMENT OF HAZARDOUS WASTES

3.13.1 Facility Hazardous Waste Generator Status

Marine Corps Base Quantico is designated as a Large Quantity Generator. All work conducted within the boundaries of this activity must meet the regulatory requirements of this generator designation. The Contractor will comply with all provisions of Federal, State and local regulatory requirements applicable to this generator status regarding training and storage, handling, and disposal of all construction derived wastes.

3.13.2 Hazardous Waste/Debris Management

Identify all construction activities which will generate hazardous waste/debris. Provide a documented waste determination for all resultant waste streams. Hazardous waste/debris will be identified, labeled, handled, stored, and disposed of in accordance with all Federal, State, and local regulations including 40 CFR 261, 40 CFR 262, 40 CFR 263, 40 CFR 264, 40 CFR 265, 40 CFR 266, and 40 CFR 268.

Hazardous waste will also be managed in accordance with the approved Hazardous Waste Management Section of the Environmental Protection Plan. Store hazardous wastes in approved containers in accordance with 49 CFR 173 and 49 CFR 178. Hazardous waste generated within the confines of Government facilities will be identified as being generated by the Government.

Prior to removal of any hazardous waste from Government property, all hazardous waste manifests must be signed by activity personnel from the Station Environmental Office. No hazardous waste will be brought onto Government property. Provide to the Contracting Officer a copy of waste determination documentation for any solid waste streams that have any potential to be hazardous waste or contain any chemical constituents listed in 40 CFR 372-SUBPART D. For hazardous wastes spills, verbally notify the Contracting Officer immediately.

3.13.2.1 Regulated Waste Storage/Satellite Accumulation/90 Day Storage Areas

If the work requires the temporary storage/collection of regulated or hazardous wastes, contact the Environmental Compliance Section of the Natural Resources and Environmental Affairs Branch (NREAB) at (703)

784-4030 for detailed assistance prior to generation of hazardous waste. The Contractor will request the establishment of a Regulated Waste Storage Area, a Satellite Accumulation Area, or a 90 Day Storage Area at the point of generation. All hazardous waste is removed from MCB Quantico within 60 days whenever possible. The Contractor must submit a request in writing to the Contracting Officer providing the following information:

Contract Number	_____
Contractor	_____
Haz/Waste or Regulated Waste POC	_____
Phone Number	_____
Type of Waste	_____
Source of Waste	_____
Emergency POC	_____
Phone Number	_____
Location of the Site	_____

(Attach Site Plan to the Request)

Attach a waste determination form. Allow ten working days for processing this request. The designated area where waste is being stored shall be barricaded and a sign identifying as follows:

"DANGER - UNAUTHORIZED PERSONNEL KEEP OUT"

3.13.2.2 Asbestos Certification

Items, components, or materials disturbed by or included in work under this contract do involve asbestos. Other materials in the general area around where work will be performed may contain asbestos. All thermal insulation, in all work areas, should be considered to be asbestos unless positively identified by conspicuous tags or previous laboratory analysis certifying them as asbestos free.

Inadvertent discovery of non-disclosed asbestos that will result in an abatement action requires a change in scope before proceeding. Upon discovery of asbestos containing material not identified in the contract documents, the Contractor shall immediately stop all work that would generate further damage to the material, evacuate the asbestos exposed area, and notify the Contracting Officer for resolution of the situation prior to resuming normal work activities in the affected area. The Contractor will not remove or perform work on any asbestos containing materials without the prior approval of the Contracting Officer. The Contractor will not engage in any activity, which would remove or damage such materials or cause the generation of fibers from such materials.

Asbestos containing waste shall be managed and disposed of in accordance with applicable environmental law. Asbestos containing waste shall be manifested and the manifest provided to the Contracting Officer.

3.13.2.3 Hazardous Waste Disposal

No hazardous, toxic, or universal waste shall be disposed or hazardous material abandoned on government property. And unless otherwise other wise noted in this contract, the government is not responsible for disposal of Contractor generated waste material. The disposal of incidental materials used to accomplish the work including, but not limited to aerosol cans, waste paint, cleaning solvents, contaminated brushes, rags, clothing, etc. are the responsibility of the Contractor. The list is illustrative rather than inclusive.

The Contractor is not authorized to discharge any materials to sanitary sewer, storm drain, or water way or conduct waste treatment or disposal on government property without written approval of the Contracting Officer.

Control of stored waste, packaging, sampling, analysis, and disposal will be determined by the details in the contract. The requirements for jobs in the following paragraphs will be used as the guidelines for disposal of any hazardous waste generated.

a. Responsibilities for Contractor's Disposal

Contractor responsibilities include any generation of WHM/HW requiring Contractor disposal of solid waste or liquid.

(1) The Contractor agrees to provide all service necessary for the final treatment/disposal of the hazardous material/waste in accordance with all local, State and Federal laws and regulations, and the terms and conditions of the contract within sixty (60) days after the materials have been generated. These services will include all necessary personnel, labor, transportation, packaging, detailed analysis (if required for disposal, and/or transportation, including manifesting or completing waste profile sheets, equipment, and the compilation of all documentation is required).

(2) Contain all waste in accordance with 40 CFR 260, 40 CFR 261, 40 CFR 262, 40 CFR 263, 40 CFR 264, 40 CFR 265, 40 CFR 266, 40 CFR 268, 40 CFR 270, 40 CFR 272, 40 CFR 273, 40 CFR 279, 40 CFR 280, and 40 CFR 761.

(3) Obtaining a representative sample of the material generated for each job done to provide waste stream determination.

(4) Analyzing for each sample taken and providing analytical results to the Contracting Officer. Provide two copies of the results.

(5) Determine the DOT proper shipping names for all waste (each container requiring disposal) and will demonstrate how this determination is developed and supported by the sampling and analysis requirements contained herein to the Contracting Officer.

<u>Contractor Disposal Turn-In Requirements</u>

For any waste hazardous materials or hazardous waste generated which requires the Contractor to dispose of, the following conditions must be complied with in order to be acceptable for disposal:

a. Drums compatible with waste contents and drums meet DOT requirements for 49 CFR 173 for transportation of materials.

b. Drums banded to wooden pallets. No more than three (3) 55 gallon drums to a pallet, or two (2) 85 gallon over packs.

c. Band using 1-1/4 inch minimum band on upper third of drum.

d. Recovery materials label (provided by Code 106.321) located in middle of drum, filled out to indicate actual volume of material, name of material manufacturer, other vendor information as available.

e. Always have three (3) to five (5) inches of empty space above volume of material. This space is called 'outage'.

3.13.3 Class I and II ODS Prohibition

Class I and II ODS as defined and identified herein will not be used in the performance of this contract, nor be provided as part of the equipment. This prohibition will be considered to prevail over any other provision, specification, drawing, or referenced documents. Regulations related to the protection of stratosphere ozone may be found in 40 CFR 82.

Heating and air conditioning technicians must be certified through an EPA-approved program. Copies of certifications shall be maintained at the employees' place of business and be carried as a wallet card by the technician, as provided by environmental law. Accidental venting of a refrigerant is a release and shall be reported to the Contracting Officer.

3.13.3.1 Universal Waste/e-Waste Management

Universal waste including but not limited to some mercury containing building products such florescent lamps, mercury vapor lamps, high pressure sodium lamps, CRTs, batteries, aerosol paint containers, electrical equipment containing PCBs, and consumed electronic devices, shall be managed in accordance with applicable environmental law and installation instructions. Disposal of universal waste must be coordinated with the Environmental Compliance Section of NREA at (703) 784-4030.

3.14 DUST CONTROL

Keep dust down at all times, including during nonworking periods. Sprinkle or treat, with dust suppressants, the soil at the site, haul roads, and other areas disturbed by operations. Dry power brooming will not be permitted. Instead, use vacuuming, wet mopping, wet sweeping, or wet power brooming. Air blowing will be permitted only for cleaning nonparticulate debris such as steel reinforcing bars. Only wet cutting will be permitted for cutting concrete blocks, concrete, and bituminous concrete. Do not unnecessarily shake bags of cement, concrete mortar, or plaster.

3.14.1 Dirt and Dust Control Plan

Submit truck and material haul routes along with a plan for controlling dirt, debris, and dust on base roadways. As a minimum, identify in the plan the subcontractor and equipment for cleaning along the haul route and measures to reduce dirt, dust, and debris from roadways.

3.15 ABRASIVE BLASTING

3.15.1 Blasting Operations

The use of silica sand is prohibited in sandblasting.

Provide tarpaulin drop cloths and windscreens to enclose abrasive blasting operations to confine and collect dust, abrasive, agent, paint chips, and other debris. Perform work involving removal of hazardous material in accordance with 29 CFR 1910.

3.15.2 Disposal Requirements

Submit analytical results of the debris generated from abrasive blasting operations per paragraph entitled Laboratory Analysis of this section. Hazardous waste generated from blasting operations will be managed in accordance with paragraph entitled "Hazardous Waste\Debris Management" of this section and with the approved HWMP. Disposal of non-hazardous abrasive blasting debris will be in accordance with paragraph entitled, "Control and Disposal of Solid Wastes".

3.16 NOISE

Make the maximum use of low-noise emission products, as certified by the EPA. Blasting or use of explosives will not be permitted without written permission from the Contracting Officer, and then only during the designated times. Confine pile-driving operations to the period between 8 a.m. and 4 p.m., Monday through Friday, exclusive of holidays, unless otherwise specified.

3.17 MERCURY MATERIALS

Mercury is prohibited in the construction of this facility, unless specified otherwise, and with the exception of mercury vapor lamps and fluorescent lamps. Dumping of mercury-containing materials and devices such as mercury vapor lamps, fluorescent lamps, and mercury switches, in rubbish containers is prohibited. Remove without breaking, pack to prevent breakage, and transport out of the activity in an unbroken condition for disposal as directed. Immediately report to the Environmental Office and the Contracting Officer instances of breakage or mercury spillage. Clean mercury spill area to the satisfaction of the Contracting Officer.

Cleanup of a mercury spill shall not be recycled and shall be managed as a hazardous waste for disposal.

3.18 REPORTS/SOLID WASTE MANAGEMENT REPORT

Reports of waste generated (including recycling) including material type (CDD, concrete, scrap metal, used oil, etc), tons, disposal destination and disposal cost shall be reported on a Construction Waste Management Report to NREA within 30 days of the close of a project, and no later than Oct 15 to be included in annual report submissions. Please fax the Construction Waste Management Report to (703) 784-4953. POC, Mr. Bhasker Thaker, 703-432-0531, bhasker.thaker@usmc.mil.

3.19 HAZARDOUS WASTE/DEBRIS DISPOSAL

No hazardous, toxic, or universal waste shall be disposed or hazardous material abandoned on government property. The government is not

responsible for disposal of Contractor generated waste material. The disposal of incidental materials used to accomplish the work including, but not limited to aerosol cans, paint, cleaning solvents, contaminated brushes, spent rags, clothing, etc. are the responsibility of the Contractor. The list is illustrative rather than inclusive.

3.20 DISPOSAL DOCUMENTATION FOR HAZARDOUS AND REGULATED WASTE

A waste profile with supporting lab results must be sent to the Environmental Compliance Section at the beginning of any project that results in waste disposal. Contact Bhasker Thaker at (703)432-0531 or Donna Heric at (703)432-0527 for a copy of the Manifest Standard Operating Procedure (SOP) at the beginning of any project that results in waste disposal. All hazardous waste is to be removed from MCB Quantico within 60 days whenever possible.

Submit a copy of the applicable EPA and State permit(s), manifest(s), or license(s) for transportation, treatment, storage, and disposal of hazardous and regulated waste by permitted facilities. All hazardous waste handling and disposal must be coordinated with the Base's Natural Resources and Environmental Affairs Branch (NREAB) at (703)784-4030/432-0530/432-0531. A preliminary copy of the manifest and LDR shall be forwarded to the Environmental Compliance Section of NREAB at least 24 hours prior to waste pickup. Only authorized personnel from the NREAB have the authority to sign Hazardous Waste Manifests.

3.21 FACILITY HAZARDOUS WASTE GENERATOR STATUS

Quantico is a large quantity generator.

3.22 REGULATED WASTE STORAGE/SATELLITE ACCUMULATION/90 DAY STORAGE AREAS

If the work requires the temporary storage/collection of regulated or hazardous wastes, contact the Environmental Compliance Section of the Natural Resources and Environmental Affairs Branch (NREAB) at (703) 784-4030 for detailed assistance prior to generation of hazardous waste. All hazardous waste is removed from MCB Quantico within 60 days whenever possible.

3.23 DISPOSAL OF UNIVERSAL WASTE

Disposal of universal waste including but not limited to mercury containing building products such as florescent lamps, mercury lamps and high pressure sodium lamps must be coordinated with the Environmental Compliance Section of NREA at (703) 784-4030.

3.24 ASBESTOS

Asbestos is no longer being managed by Environmental Affairs. Mr. Donald Sisco, Safety Division, is the appointed Asbestos Program Manager by the Commander, Marine Corps Base, Quantico. Questions pertaining to disposal of asbestos should be directed to Mr. Sisco at 784-2752.

-- End of Section --

SECTION 01 74 19.05 20

CONSTRUCTION AND DEMOLITION WASTE MANAGEMENT FOR DESIGN-BUILD
06/10

PART 1 GENERAL

1.1 GOVERNMENT POLICY

Government policy is to apply sound environmental principles in the design, construction and use of facilities. As part of the implementation of that policy the Contractor shall: (1) practice efficient waste management when sizing, cutting, and installing products and materials and (2) use all reasonable means to divert construction and demolition waste from landfills and incinerators and to facilitate their recycling or reuse.

1.2 PLAN

A waste management plan shall be submitted within 15 days afternotice to proceed and prior to initiating any site preparation work. The plan shall include the following:

a. Name of individuals on the Contractor's staff responsible for waste prevention and management.

b. Actions that will be taken to reduce solid waste generation.

c. Description of the specific approaches to be used in recycling/reuse of the various materials generated, including the areas and equipment to be used for processing, sorting, and temporary storage of wastes.

d. Characterization, including estimated types and quantities, of the waste to be generated.

e. Actions that will be taken to divert at least 50% of the non-hazardous solid wastes (including waste from construction and demolition operations) from the waste stream. Report actual diversion rates during construction and demolition.

f. Name of landfill and/or incinerator to be used and the estimated costs for use, assuming that there would be no salvage or recycling on the project.

g. Identification of local and regional reuse programs, including non-profit organizations such as schools, local housing agencies, and organizations that accept used materials such as materials exchange networks and Habitat for Humanity.

h. List of specific waste materials that will be salvaged for resale, salvaged and reused, or recycled. Recycling facilities that will be used shall be identified. Provide percentage of non-hazardous construction and demolition waste materials that have been diverted from the waste stream.

i. Identification of materials that cannot be recycled/reused with an

explanation or justification.

j. Anticipated net cost savings determined by subtracting Contractor program management costs and the cost of disposal from the revenue generated by sale of the materials and the incineration and/or landfill cost avoidance.

1.3 RECORDS

Records shall be maintained to document the quantity of waste generated; the quantity of waste diverted through sale, reuse, or recycling; and the quantity of waste disposed by landfill or incineration. Report with monthly invoicing the tons diverted, the tons sent to the landfill, cost for each, and the monthly diversion rate. The records shall be made available to the Contracting Officer during construction, and a copy of the records shall be delivered to the Contracting Officer upon completion of the construction.

1.4 DISPOSAL

Except as otherwise specified in other sections of the specifications, disposal shall be in accordance with the following:

1.4.1 Reuse.

First consideration shall be given to salvage for reuse since little or no re-processing is necessary for this method, and less pollution is created when items are reused in their original form. Sale or donation of waste suitable for reuse shall be considered. Salvaged materials, other than those specified in other sections to be salvaged and reinstalled, shall not be used in this project.

1.4.2 Recycle.

Waste materials not suitable for reuse, but having value as being recyclable, shall be made available for recycling whenever economically feasible.

1.4.3 Waste.

Materials with no practical use or economic benefit shall be disposed at a landfill or incinerator.

PART 2 PRODUCTS

Not used.

PART 3 EXECUTION

Not used.

-- End of section --

SECTION 01 78 24.00 20

FACILITY ELECTRONIC OPERATION AND MAINTENANCE SUPPORT INFORMATION (eOMSI)
08/12

PART 1 GENERAL

1.1 GENERAL REQUIREMENTS

This section provides the requirements for electronic operation and maintenance support information (eOMSI). eOMSI contains detailed as-built information describing the efficient, economical, safe operation, maintenance, and repair of the facility. eOMSI is required to be in electronic format divided into the eOMSI Data and eOMSI Document files.

a. Provide eOMSI Data files in the eOMSI Spreadsheet Workbook format that are uploaded by the Government into a Government computerized maintenance management system (CMMS). Maximo is the CMMS that will be used on this project.

b. Provide eOMSI Document files in Portable Document Format (PDF), Computer Assisted Design and Drafting (CADD), and MS Word formats that can be uploaded into a document management system. The eOMSI document information is to be factual, concise, comprehensive, and written to be easily used by maintenance personnel. Descriptive matter and theory must include technical details that are essential for a comprehensive understanding of the operation, maintenance and repair of the system. The eOMSI Preparer shall ensure that the eOMSI reflect changes to systems and equipment, made during construction.

1.2 DEFINITIONS

1.2.1 Component Inventory Management Unit (CIMU)

CIMU is an organization of like-kind real property into manageable maintenance units. CIMU is a building component, group of components or component assemblies, serving a specific purpose in a facility that can be expected to follow a common and predictable lifecycle behavior. This class of non-equipment will include items such as exterior walls, exterior windows, interior finish, and roofs. This class of equipment will include items such as fan coil units, air handling units, lighting, and water closets. CIMUs can include items of installed equipment typically subject to routine scheduled maintenance.

1.2.2 Real Property Inventory Equipment (RPIE)

RPIE is a Government owned or leased individual pieces of equipment, apparatus, or fixture that are essential to the function of the real property (i.e. plumbing, electrical, heating, cooling and elevators). It is physically attached to, integrated into, and built in or on the property. Individual RPIE's can be combined to make a CIMU to facilitate facilities management.

1.2.3 BOTH (Combined CIMU and RPIE)

A BOTH is a stand-alone piece of equipment that can be managed independently and therefore is a Component Inventory Management Unit and a Real Property Installed Equipment. (If a CIMU has a Quantity of "One", it

would be considered a BOTH)

1.2.4 Utility and Energy Management (UEM)

UEM is a part of the Government Public Works (PW) Organization that manages the operation and maintenance of the Base utilities.

1.2.5 Systems

The words "system", "systems", and "equipment", when used in this document refer to as-built systems and equipment.

1.2.6 Computer Assisted Design and Drafting (CADD)

Electronic Computer Assisted Design and Drafting graphic software program that is used to create facility design contract documents.

1.2.7 eOMSI Spreadsheet Workbook

The eOMSI Spreadsheet Workbook is a group of Excel spreadsheets that provide forms, samples, and tools to assist the Contractor in identifying equipment and non-equipment data for the project. Use these Excel spreadsheets to organize and record maintenance data for the project. Use the eOMSI Spreadsheet Workbook in conjunction with this specification section with the file title: "eOMSI_spreadsheet_wkbk_new_constr.xls" located inside the zip file at the following web link: http://www.wbdg.org/ccb/DOD/UFGS_SUPPLEMENTS/UFGS_01_78_24.00_20_eOMSI_spreadsheet.zip

1.2.8 Flat File

The flat file is the blank forms portion of the eOMSI Spreadsheet Workbook used to fill in the equipment and non-equipment data. These flat file forms are Excel templates with column headings that identify required information for equipment and non-equipment. The data placed on the flat file spreadsheets are organized by the Contractor into RPIE, and BOTH maintenance units.

1.2.9 KTR

KTR is an abbreviation for "Contractor."

1.3 ORGANIZATION of eOMSI

Prepare the eOMSI submittals in two components, eOMSI Data Files and eOMSI Document Files.

1.3.1 eOMSI Data Files

Provide facility specific information listed in the DESCRIPTION of WORK of this specification section and divide into Equipment Data and Non-Equipment Data on eOMSI Spreadsheet Workbook / Flat Files. The Government will use the completed eOMSI Spreadsheet Workbook to update information of the CMMS indicated above. The following tabs are included in the eOMSI Spreadsheet Workbook and serve the purpose stated:

a. Flat File - Equipment Data; This spreadsheet provides an organized format for the contractor to fill in required information about dynamic equipment (fans, pumps,…) that is part of the project.

b. Flat File - Non-Equipment Data; This spreadsheet provides an organized format for the Contractor to fill in required information about non-equipment (doors, windows, etc.) that is part of the project.

c. New CONST - RENOVATION Schema; Provides information and instructions to explain the task of completing the Flat File - Equipment Data and Flat File - No-Equipment Data spreadsheets.

d. Facility and UEM Uniformat; Provides a Uniformat division of facility and utility systems and components of the project. This information is used to complete the Master-System-Subsystem portions of the Flat File - Equipment Data and Flat File - Non-Equipment Data spreadsheets.

e. UEM Asset Classification: Provides a list of critical Utility and Energy Management components that must be identified in the Flat File - Equipment Data spreadsheet.

f. Asset Identification List: List of items that require equipment tagging. Tag numbering must be entered in the Equipment Tag Number of the Flat File - Equipment Data spreadsheet.

g. Data Definitions; Provide definitions of terms used on the spreadsheet workbook.

1.3.2 eOMSI Document Files

Provide facility specific information, which was used to construct the project and provide information on operation and maintenance of the facility in a form that can be easily accessed and used. Organize the document files to facilitate storage in an electronic Government document file management system. Arrange the eOMSI Documents files in the following order and identify the document files as follows:

a. Facility Information

b. Primary Systems Information

c. Product and Drawing Information

Cross-referencing within or between the eOMSI Document File parts must be specific.

1.3.3 Order of Precedence of eOMSI Requirements

This specification section takes precedence over the eOMSI Spreadsheet Workbook in the event of conflict between this specification section and the eOMSI Spreadsheet Workbook.

1.3.4 Sources of eOMSI Information

The sources of data needed to prepare the eOMSI include, but are not limited to, the design plans and specifications, field visits, approved construction submittals and manufacturer's catalog data for materials, products, systems, as-built drawings, contract modifications, and construction methods used in this contract. Ensure that the eOMSI reflect changes to systems and equipment made during construction as a result of contract modifications. Collect and input needed information to complete the data and document files

1.3.5 Unified Facility Guide Specifications (UFGS) Operation and Maintenance Data Packages

Provide information necessary to maintain the equipment and non-equipment of the facility by utilizing the SD-10 Operations and Maintenance Data Packages as defined in Section 01 78 24.00 20 FACILITY ELECTRONIC OPERATION AND MAINTENANCE SUPPORT INFORMATION (eOMSI). Provide the SD-10 Data Packages required in the individual sections for each product, material, and system used on the project. Include Section 01 78 24.00 20 FACILITY ELECTRONIC OPERATION AND MAINTENANCE SUPPORT INFORMATION (eOMSI) in the Contractors final construction specification documents.

1.4 eOMSI MEETINGS

Organize, coordinate, and facilitate the meetings necessary to obtain the information to complete the eOMSI submittal.

1.4.1 eOMSI Start-Up Meeting

During the Post Award Kickoff Meeting, discuss the following;

a. The eOMSI Development Meetings schedules and participants.

b. Processes and methods of gathering of facility eOMSI information during construction.

c. The qualifications of the eOMSI Preparer.

d. The eOMSI Submittals schedule. Place the eOMSI submittal schedule on the construction schedule.

1.4.2 eOMSI Development Meetings

Meet with key personnel to discuss the eOMSI requirements and the deliverables. These are a series of meetings that begin after the Post Award Kickoff Meeting and conclude with the Contractor's first eOMSI submittal. Include the eOMSI Preparer, Commissioning Authority (CA) and the Quality Control Manager to attend these meetings. Also include the Mechanical, Electrical and Fire Protection Sub Contractors as required. The purposes of these meetings are to:

a. Familiarize the Contractor with the Government PW maintenance processes.

b. Provide the Contractor with an understanding of the RPIE, CIMU, and BOTH to organize the facility into these information structures.

c. Obtain the "By KTR Using Government Info" information for the eOMSI Flat File Spreadsheets.

d. Review and identify the electronic format, units of measure, titles, and wording necessary to load the eOMSI data into the designated Government CMMS and eOMSI documents into the Government Document Management System.

e. Review progress of eOMSI development and discuss issues that need to be resolved.

f. Coordinate requirements for eOMSI training.

1.4.3 Facility Turnover Meetings

Refer to paragraph FACILITY TURNOVER PLANNING MEETINGS in Section 01 31 19.05 20 POST AWARD MEETINGS for eOMSI facility turnover meeting requirements.

1.5 UNITS of MEASURE

Provide eOMSI utilizing the units of measure required by the RFP for the facility. Refer to Section 01 33 10.05 20 DESIGN SUBMITTAL PROCEDURES. Metric eOMSI shall be in SI (System International) metric units exclusively.

1.6 QUALIFICATIONS of eOMSI PREPARER

Submit Qualifications of eOMSI Preparer that meet the following:

a. Possess multidiscipline technical knowledge of the operations and maintenance of building systems.

b. Experience with the type of systems that are identified in this specification and capable of augmenting manufacturer's information to clarify operations instructions.

c. Experience preparing detailed Operations and Maintenance Manuals for facilities of equal size and complexity as required by this contract

d. Ability to prepare spreadsheets to be loaded into a CMMS.

e. Experience presenting training and coordinating a team of manufacturer's representatives to provide training of Facility Users and Maintenance Personnel.

1.7 SUBMITTALS

Government approval is required for submittals with a "G" designation for submittals found in RFP PART 2. Additional construction submittals reserved for Government approval are listed in the Section 01 33 00.05 20 CONSTRUCTION SUBMITTAL PROCEDURES. Submittals with a "G" designation found in the sections used by the Contractor to create construction specification, require DOR approval. DOR approved submittals are also listed in the "CONSTRUCTION SUBMITTALS" paragraph in each RFP PART 4, Performance Technical Specifications. Submit the following in accordance with Section 01 33 10.05 20 DESIGN SUBMITTAL PROCEDURES and Section 01 33 00.05 20 CONSTRUCTION SUBMITTAL PROCEDURES.

SD-07 Certificates

Qualifications of eOMSI Preparer; G

SD-10 Operation and Maintenance Data

Training Plan; G

For each training session; submit dates start and finish times, and locations; outline of the information to be presented; names and qualifications of the presenters; and list of texts and other materials required to support training.

Training Outline; G

SD-11 Closeout Submittals

eOMSI, Preliminary Submittal; G

eOMSI, 100 percent, Prefinal Submittal; G

eOMSI, Final Submittal; G

Training Video Recording; G

Validation of Training Completion; G

1.8 SUBMITTAL FORMAT

1.8.1 eOMSI Data Files

Provide eOMSI data on compact disks (CD) or data digital versatile disk (DVD) disks in formats that are compatible with used on the project. Provide eOMSI Data information by completing the eOMSI Spreadsheet Workbook / Flat File initial templates:

a. eOMSI Spreadsheet Workbook / Flat File - Equipment Data tab; Provide information to all spreadsheet fields. Obtain the information indicated to be supplied "By KTR using Government info" from the Contracting Officer / Facility Maintenance Specialist (FMS) and fill in this part of the Flat File. Typically identify individual pieces of equipment by RPIE. Group equipment with similar Uniformat classification, design life, install date, remaining service life, and direct condition rating - into manageable CIMUs. Except, when the individual RPIE is complex enough to require its own management planning and in this case the individual RPIE is also a BOTH. Each CIMU shall be greater than $2,500 in value.

b. eOMSI Spreadsheet Workbook / Flat File - Non-Equipment Data tab; Provide information to all spreadsheet fields. Group Non-equipment with similar Uniformat classification, design life, install date, remaining service life, and direct condition rating - into manageable CIMUs. Obtain the information indicated to be supplied "By KTR using Government info" from the Contracting Officer / FMS to complete that portion of the Flat File. Each CIMU shall be greater than $2,500 in value.

1.8.2 eOMSI Document Files

Provide eOMSI document files on CD or data DVD disks using the most current version of Adobe Acrobat or similar software capable of producing PDF files that can be used to upload the files into an electronic Government document management system. Bookmark the PDF files for easy access to the information. Bookmark Facility Information and Primary Systems Information to at least one level lower than the major system. Bookmark Product and Drawing Information documents using the current version of Masterformat and arrange submittals using the specification sections as a structure. Use Masterformat and UFGS numbers along with descriptive bookmarking titles that explain the content of the information that is being bookmarked.

Provide the following information on the compact disk label and disk holder/ case:

a. Building Number

b. Project Title

c. Activity and Location

d. Construction Contract Number

e. Prepared For: (Contracting Agency)

f. Prepared By: (Name, title, phone number and email address)

g. Include the compact disk content on the disk label

h. Date

i. Virus scanning program used

1.9 SUBMITTAL SCHEDULE

Provide the following eOMSI submittals. Scan electronic files of eOMSI Data and eOMSI Documents for malicious viruses using a commercially available scanning program that is routinely updated to identify/remove current virus threats.

1.9.1 eOMSI, Preliminary Submittal

Submit the Preliminary submittal when construction is approximately 50 percent complete;

a. eOMSI Data Files.(Excel)

b. eOMSI Document Files (Bookmarked PDF) that include:

(1) Facility Information

(2) Primary Systems Information

(3) Product and Drawing Information

Provide four electronic copies to the Contracting Officer for approval. Provide the submittal in sufficient detail to allow the Government to substantiate that the data collection, detail of discussion, and information organization of both the data and document files are in accordance with the contract. Include in the submittal, as a minimum, all available Facility Information; all systems of the Primary Systems Information (at least one system to be essentially complete and the remaining systems shall be at least 50 percent complete); and at least two Masterformat divisions of the completed Product Data.

1.9.1.1 Preliminary eOMSI Submittal Review Duration

Allow the Government a minimum of 30 calendar days to review and comment on the submittal, from the time the Government receives the Preliminary eOMSI submittal.

1.9.2 100 percent - Prefinal eOMSI Submittal

Submit four electronically formatted copies of the 100 percent submittal of

the eOMSI Data File and eOMSI Document File to the Contracting Officer for approval. The eOMSI, 100 percent, Prefinal Submittal is due 90 calendar days prior to Beneficial Occupancy Date (BOD)/ Placed In Service Date. This submittal shall be a complete, working document that can be used to operate and maintain the facility. Any portion of the submittal that is incomplete or inaccurate will require the entire submittal to be returned for correction. Incorporate all Government requested changes from the Preliminary submittal and the eOMSI Development Meetings comments into the Prefinal submission. Provide the same information required for each eOMSI document file CD/ DVD disk label, on the introductory page of each eOMSI submittal volume. Refer to paragraph titled "eOMSI Document Files" of this section for a list of this required introductory page information.

Submit the Prefinal submittal when construction is 90 percent complete that include;

a. eOMSI Data Files.(Excel)

b. eOMSI Document Files (Bookmarked PDF) that include;

(1) Facility Information

(2) Primary Systems Information

(3) Product and Drawing Information

Submit Prefinal submittal when construction is approximately 90 percent complete that include;

a. eOMSI Data Files (Excel)

b. eOMSI Document Files (Bookmarked PDF) that include;

(1) Product and Drawing Information

1.9.2.1 Prefinal eOMSI Submittal Review Duration

Allow the Government a minimum of 30 calendar days to review and approve the submittal, from the time the Government receives the Prefinal eOMSI submittal. If the Prefinal submittal is required to be resubmitted, the Government review of subsequent submittals shall have the same review duration as the first submittal. No extension in project completion date will be granted due to resubmittal.

1.9.3 eOMSI, Final Submittal

Complete the eOMSI Data and Documents and provide Final submittal in Excel and bookmarked PDF format as required in the Prefinal Submittal. Deliver submittals to the Contracting Officer for approval. The Final submittal is due at BOD/ Placed in Service Date. Include all Government requested changes from the Prefinal submittal, and the Project Closeout Meetings to complete the Final submittal.

In addition to the formats stated above, provide four electronic copies of the Final submittal in editable formats. Provide editable eOMSI Document drawing and diagram files in CADD and other editable eOMSI Document files in MS Word or Excel. Refer to Product and Drawing Information below to describe the format of the Record Drawings submission.

1.10 FACILITY SYSTEMS

The project is anticipated to include the following critical systems. Provide eOMSI data, eOMSI documents, and training for all products, materials, and equipment that make up these systems in the final constructed facility, including the following systems:

a. HVAC facility systems (including chillers, boilers, heat pumps, air handling equipment, exhaust fans, fan coil units, VAV boxes, heat recovery wheels, hot and chilled water hydronic systems, control valves, and backflow preventers)

b. Direct Digital Controls/Space Temperature Controls

c. Steam condensate pumps, Steam pressure relief valves.

d. Electrical systems (including transformers, diesel electric generator sets, automatic transfer switches, primary switchgear, secondary switchgear, high voltage switches, variable frequency drives, and frequency converters).

e. Fire protection systems and fire alarm detection systems.

f. Cathodic protection

g. Site civil water utilities (including water, storm water collection, and treatment systems).

h. Site civil wastewater utilities (including pumping station, tanks, treatment and filters).

i. Potable water systems (including wells, tanks, pumps, back-flow preventers, filters, disinfection, and controllers).

j. Site electrical utilities (including substations, transformers, and pad mounted switchgear).

PART 2 PRODUCTS

2.1 DESCRIPTION OF WORK

2.1.1 eOMSI DATA FILES

Provide the following items of data in a format compatible with the CMMS used on the project. Enter all data in the eOMSI Spreadsheet Workbook / Flat File.

2.1.1.1 Equipment Information

a. Equipment Listing - Provide the following information for each piece of installed equipment and for each applicable item listed on the UEM Asset Classification tab of the eOMSI Spreadsheet Workbook. Enter all information on the Flat File - Equipment Data tab of the eOMSI Spreadsheet Workbook.

(1) Asset_ID

(2) Asset Description

(3) ORG_ID

(4) Site_ID

(5) Building Name

(6) Asset Type

(7) Inventory Category

(8) Location Code

(9) Design Life

(10) FCI

(11) Remaining Service Life

(12) DCR

(13) Work Center

(14) Belongs to (Parent Asset. ID)

(15) Contract number

(16) Task/delivery order number

(17) Drawing reference ID

(18) Location description

(19) Master system Uniformat

(20) System Uniformat

(21) Subsystem Uniformat

(22) Quantity

(23) Install date

(24) Replacement cost

(25) Manufacturer

(26) Model number

(27) Serial number

(28) Manufacturer Warranty end date

(29) Warranty Company Info

(30) Comment (Such as: Required information not to void warranty)

(31) Status Date

(32) Asset Status

(33) UEM Classification ID

(34) UEM Classification Description

(35) Job Plan Code (Preventive Maintenance)

The Job Plan List is provided by NAVFAC to identify applicable Job Plan Codes. If NAVFAC does not have a Job Plan for the equipment used, provide information in paragraph entitled Job Plan for Equipment NOT assigned a NAVFAC Job Plan below.

(36) Equipment Tag Number

b. Job Plan for Equipment NOT assigned a NAVFAC Job Plan - Preventive Maintenance Procedures, and Schedules. If the Ggovernment cannot provide a job plan for a specific piece of equipment, provide a detailed Job Plan (Preventive Maintenance Plan) using manufacturer's recommendations and sound engineering practice. Show associated frequencies when job plan is to be performed and include detailed preventive maintenance (PM) procedures such as inspections, tests, adjustments required to ensure proper and economical operation and minimize corrective maintenance. For periodic calibrations, provide manufacturer's specified frequency and procedures for each operation. Detailed Job Plans include the following:

(1) Safety instructions and precautions,

(2) Including lock out/tag out precautions,

(3) Required skill level,

(4) Number of personnel needed,

(5) Frequency of performing the job plan,

(6) Special tools needed,

(7) Parts needed

(8) Estimated time required to complete the task.

(9) Lubrication schedules indicating types, grades and capacities.

2.1.1.2 Non-Equipment Information

a. Provide the following information for each item of non-equipment. Enter all information on the eOMSI Spreadsheet Workbook - Flat File Non-Equipment Data tab.

(1) Asset ID

(2) Asset Description

(3) ORG_ID

(4) Site_ID

(5) Asset Type

(6) Inventory Category

(7) Design Life

(8) FCI

(9) DCR

(10) Building Name

(11) Location Code

(12) Contract Number

(13) Task/ Delivery Order Number

(14) Drawing Reference _ID

(15) Notes on CIMU Structure

(16) Master System Uniformat

(17) System Uniformat

(18) Subsystem Uniformat

(19) Quantity

(20) Install Date

(21) Remaining Service Life

(22) Replacement Cost

(23) Warranty End Date

(24) Warranty Company Info

(25) Comments (Such as: Required information not to void warranty)

2.1.2 eOMSI DOCUMENT FILES

2.1.2.1 Facility Information

Facility Information includes the following;

a. General Facility and System Description - Describe the function of the facility. Detail the overall dimensions of the facility, number of floors, foundation type, expected number of occupants, and facility Category Code. List and generally describe all the facility systems listed in the Primary Systems Information and any special building features (for example, HVAC Controls, Sprinkler Systems, cranes, elevators, and generators). Include photographs marked up and labeled to show key operating components and the overall facility appearance.

b. Basis of Design - Create the Basis of Design that shows the basic design scope of work, assumptions and the original intentions of the DOR. Identify the site utility design goals, objectives, design load

limits, assumptions, and system features that are critical to the operation and maintenance of the systems.

c. Safety Hazards - List all residual hazards identified in the Activity Hazard Analysis as prepared by the DOR. Provide recommended safeguards for each identified hazard.

d. Floor Plans - Provide uncluttered, legible 11 by 17 inches floor plans. Include room numbers, type or function of spaces, and overall facility dimensions on the floor plans. Do not include construction instructions, references, frame numbers, etc.

e. Floor Coverings, Wall Surfaces, Ceiling Surfaces - Provide a table that lists by room number (including hallways and common spaces), the type, and area of finish. The table shall include a facility summary of the total area for each type of space and floor, wall, or ceiling finish.

f. Roofing - Provide the total area of each type of roof surface and system. Provide the name of the roofing product and system; manufacturer's, supplier's, and installer's names, addresses, and phone numbers. For each type of roof, provide a recommended inspection, maintenance and repair schedule that details checkpoints, frequencies, and prohibited practices. List roof structural load limits.

g. Supply Inventory Requirements - Provide a list of maintenance and repair supplies (e.g., spare parts, fuels and lubricants) required to ensure continued operation without unreasonable delays. Identify and list parts and supplies that have long purchase lead times. Give special consideration to facilities at remote locations.

2.1.2.2 Primary Systems

Provide Primary Systems Information for all primary systems listed below. Primary systems information shall address operations, troubleshooting guides and diagnostic techniques, repair, and preventive maintenance.

a. HVAC facility systems

b. Direct digital controls/ space temperature controls

c. Electrical systems

d. Fire protection systems and fire alarm and detection systems

e. Cathodic protection

f. Site civil utilities (including water, wastewater, storm water collection, gas/ fuel, manholes/ hand holes, and pumping, and treatment systems)

g. Site electrical utilities (including power generation, communications, distribution, ducts, and manholes/ hand holes)

2.1.2.3 Primary Systems Information

Primary Systems Information requires using a systems approach. This approach requires that consideration be given to the entire system (that is, the interfaces of equipment, connections and material flow within the

system). Use Notes, Cautions and Warnings throughout the Primary Systems Information to emphasize important and critical instructions and procedures. Provide the following information for each system:

a. Operation

(1) System Description - Provide a detailed discussion of the system composition and operation. Include technical details that are essential for an understanding of the system.

(2) Start-Up and Shutdown Procedures - Provide step by step instructions to bring systems from static to operational configurations and from operating to shutdown status.

(3) Normal and Emergency Operating Instructions - Provide a discussion of the normal and emergency operation and control of the system. Address operating norms (for example, temperatures, pressures, and flow rates) expected at each zone or phase of the system. Supplement the discussion with control and wiring diagrams and data. Include shutdown instruction for fires, explosions, spill, or other contingencies.

(4) System Flow Diagrams - Provide a flow diagram indicating system liquid, air or gas flow during normal operations. Integrate all system components into the diagram. A compilation of non-integrated, flow diagrams for the individual system components are not acceptable.

(5) Field Test Reports - Provide Field Test Reports (SD-06) that apply to equipment associated with the system. The eOMSI Document Submittal does not require the second season HVAC testing.

(6) Operator Servicing Requirements - Provide instructions for services to be performed by the operator such as lubrication, adjustments, and inspection.

b. Troubleshooting Guides and Diagnostic Techniques

Provide step-by-step procedures for isolating the cause of system malfunctions. The procedures shall clearly state indications or symptoms of trouble; the sequential instructions, including checks and tests to be performed and conditions to be sought, to determine the cause; and remedial measures to bring the equipment and system to operating condition. Identify special test equipment required to perform the procedures. Start the troubleshooting guide at the system level and proceed to a level where detailed manufacturer's troubleshooting procedures for equipment and components can be referenced. Provide clear references to repair procedures included in the manufacturer's Product Data.

c. Repair

Repair Procedures - Provide repair instructions required for restoring equipment to proper operating condition and standards. References must be specific as to location within the eOMSI manuals.

2.1.2.4 Product and Drawing Information

This portion of the eOMSI provides a record of the facility products, materials, equipment, and minimum information necessary to operate the facility. Provide Product and Drawing Information for all systems in the final constructed facility, including the anticipated critical systems identified in this specification section.

a. O&M Data. Include, as a minimum O&M Data, required in the SD-10 Data Packages of the UFGS specifications. Provide the following for each product, material, and system on the project:

(1) Materials

(2) Equipment

(3) Data Sheets

(4) Test Reports

(5) Warranties

(6) Certificates

(7) Shop Drawings

b. Drawings. Provide original CADD drawings or original facility design drawings that have been edited to eliminate unneeded information and highlight eOMSI information in PDF format. Provide the following drawings at a large enough scale to be clear, legible, and able to differentiate designated isolation units from surrounding valves and switches.

(1) Utility Schematic Diagrams - Provide a one line schematic diagram for each utility system such as power, water, wastewater, and gas/ fuel. Schematic diagram must show from the point where the utility line is connected to the mainline up to the five-foot connection point to the facility. Indicate location or area designation for route of transmission or distribution lines; locations of duct banks, manholes/ handholes or poles; isolation units such as valves and switches; and utility facilities such as pump stations, lift stations, and substations.

(2) Enlarged Connection and Cutoff Plans - Provide enlarged floor plans that provide information between the five foot utility connection point and where utilities connect to facility distribution. Enlarge floor plans/ elevations of the rooms where the utility enters the building and indicate on these plans locations of the main interior and exterior connection and cutoff points for all utilities. Also enlarge floor plans/ elevations of the rooms where equipment is located. Include enough information to enable someone unfamiliar with the facility to locate the connection and cutoff points. Indicate the room number, panel number, circuit breaker, valve number, etc., of each utility and equipment connection and cutoff point, and what that connection and cutoff point controls.

c. Equipment Tags. Provide equipment tags for all applicable items listed in eOMSI Spreadsheet Workbook/ Asset Identification List tab. Provide

tags that are durable, oil and water-resistant and approved by the Contracting Officer. Attach tag with copper wire and spray with a clear silicone waterproof coating. Place tags on the equipment in a visible location that can be read by an inspector in a standing position. Provide tag information to include: Contract Number, Maximo Equipment Identification Numbers, and Equipment Tag Number that corresponds with the drawing. Only equipment with a value of greater than $2,500 or sized as noted in eOMSI Spreadsheet Workbook/ Asset Identification List tab, shall be tagged.

Provide tags for the items listed below in addition to the items listed in eOMSI Spreadsheet Workbook/ Asset Identification List tab:

(1) Control valves for heating, cooling, gas, fuel, water and wastewater for piping 1 1/2 inches or greater. Main interior and exterior utility cut off valves (no dollar value restriction).

d. Record Drawings. Provide an electronic copy of the Record Drawings for the project in PDF format, bookmarking all drawings using the sheet title and sheet number. Provide the Record Drawings on the same electronic media as used for the eOMSI submittal but on separate disks or files to allow simultaneous use of the eOMSI and Record Drawings.

PART 3 EXECUTION

3.1 eOMSI TRAINING

Prior to acceptance of the facility by the Contracting Officer for Beneficial Occupancy/ Placed in Service Date, the eOMSI Preparer must provide a comprehensive project-specific Government personnel training program for the systems and equipment of the facility specified in the technical specifications of this Contract. The trainees must include the Facilities Management Specialist, maintenance staff, and applicable building occupants. Coordinate, schedule, and ensure that training is completed. Instructors shall be well-versed in the particular systems that they are presenting. The eOMSI Preparer shall direct a team of specialist to address all aspects of the eOMSI submittal. The team must include at least a mechanical engineer and an electrical engineer. Provide instruction on site at a location approved by the Contracting Officer.

3.1.1 Training Plan

Submit a written training plan to the Contracting Officer for approval at least 60 calendar days prior to the scheduled training. Indicate prior approval of the training plan by the Quality Control Manager (QC) on the submittal forwarded to the Contracting Officer. Also, coordinate the training schedule with the Contracting Officer and QC. Include within the plan the following elements:

a. Equipment included in training.

b. Intended audience.

c. Location of training.

d. Objectives.

e. Subjects covered including description.

f. Duration of training on each subject.

g. Methods (classroom lecture, video, site walk-through, actual operational demonstrations, written handouts, etc.).

h. Instructor and instructor qualifications for each subject.

3.1.2 Training Content

The core of this training shall be based on manufacturer's recommendations and the operation and maintenance information defined in Section 01 78 24.00 20 FACILITY ELECTRONIC OPERATION AND MAINTENANCE SUPPORT INFORMATION (eOMSI). The QC is responsible for overseeing and approving the content and adequacy of the training. The eOMSI Preparer and the QC must interview the Government Facilities Management Specialist and the Contracting Officer to determine the special needs and areas where training will be most valuable. The Contracting Officer and QC must decide how rigorous the training should be for each piece of equipment. The training shall include the following for each Primary System:

a. Start-up, normal operation, shutdown, unoccupied operation, seasonal changeover, manual operation, controls set-up and programming, troubleshooting, and alarms.

b. Relevant health and safety issues.

c. Discussion of how the feature or system is environmentally responsive. Advise adjustments and optimizing methods for energy conservation.

In addition to the training requirements above, provide a brief summary of "Facility Information" and a more detailed presentation of, "Primary Systems Information". Spend 95 percent of the instruction time during the presentation on the "Primary Systems Information". Include the following for each Primary system training presentation:

d. Design intent.

e. Use of O&M Manuals.

f. Review of control drawings and schematics.

g. Interactions with other systems.

h. Special maintenance and replacement sources.

i. Tenant interaction issues.

3.1.3 Training Outline

The eOMSI Preparer shall provide each trainee in the course a written course outline, listing the major and minor topics to be discussed by the instructor on each day of the course. Provide the course outline 14 calendar days prior to the training.

3.1.4 Training Video Recording

Provide to the Contracting Officer two copies of the training course in DVD video recording format. Capture within the recording, in video and audio, all instructors' training presentations including question and answer

periods with the trainees. Confirm proposed software, used to create the training is compatible with the using activity resources to play the training materials. The recording camera(s) shall be attended by a person during the recording sessions to assure proper size of exhibits and projections during the recording are visible and readable when viewed as training.

3.1.5 Unresolved Questions from Trainees

If, at the end of the training course, there are questions from trainees that remain unresolved, the instructor shall send the answers, in writing, to the Contracting Officer for transmittal to the trainees, and the training video shall be modified to include the appropriate clarifications.

3.1.6 Validation of Training Completion

Ensure that each attendee at each training session signs a class roster daily to confirm Government participation in the training. At the completion of all training, submit a signed validation letter that includes a sample record of training for reporting what systems were included in the training, who provided the training, when and where the training was performed, and copies of the signed class rosters. Provide two copies of the validation to the Contracting Officer, one copy to the OMSI Preparer for inclusion into the OMSI documentation, and one copy to the LEED Documentation Preparer.

3.1.7 Quality Control Coordination

Coordinate the eOMSI training with the QC in Section 01 45 00.05 20 DESIGN AND CONSTRUCTION QUALITY CONTROL FOR DESIGN-BUILD.

3.2 FIELD VALIDATION

Perform the field validation at the 100 percent - Prefinal submittal stage. Coordinate with the Contracting Officer to establish the field validation date, to ensure the availability of Government representatives. Validation without Government representative, unless waived, is not acceptable.

The purpose of the validation is to discuss final requirements needed to complete the eOMSI submittals and to conduct field verification. Field validation is used to verify the accuracy and completeness of the eOMSI Data and eOMSI Documents. This includes verifying that the systems and equipment in the eOMSI submittal accurately reflect the as-built conditions; verifying that O&M procedures are appropriate for the systems and equipment that they support; verifying that equipment nomenclature and system configurations are accurate; and confirming correct equipment tagging.

The eOMSI Preparer, Superintendent, Quality Control Manager, and the Design Quality Control Manager/ Commissioning Authority (CA) shall attend the field validation, to verify the accuracy of the eOMSI Submittal. The eOMSI Preparer shall perform the validation, document the results of the field validation and correct the final eOMSI submittal to reflect the changes identified.

-- End of Section --

PART THREE - PROJECT PROGRAM

Project Program

Academic Instruction Facility, TECOM Schools
P-677
FY14
Category Code 17120, 17135, 61010

Marine Corps Base, Quantico, Virginia

Date: February 3, 2014

TABLE OF CONTENTS

1. PROJECT DESCRIPTION

2. PROJECT OBJECTIVES
2.1. Mission Statement
2.2. Facility Function
2.3. Project Specific Priorities
2.4. Appropriate Design
2.5. Workflow Process
2.6. Special Design Challenges
2.7 Adaptability and Flexibility

3. SITE ANALYSIS
3.1 Existing Site Conditions
3.2 Site Development Requirements

4. BUILDING REQUIREMENTS
4.1 Space Tabulation
4.2 Space Relationships
4.3 Exterior Character

5. ROOM REQUIREMENTS

6. ENGINEERING SYSTEMS REQUIREMENTS
A10 Foundations.
A20 Basement Construction
B10 Superstructure
B20 Exterior Closure
B30 Roofing
C10 Interior Construction
C20 Stairs
C30 Interior Finishes
D10 Conveying Systems
D20 Plumbing
D30 HVAC
D40 Fire Protection Systems
D50 Electrical Power and Lighting
E10 Equipment
E20 Furnishings
F10 Special Construction – Not Applicable
F20 Selective Building Demolition – Not Applicable
G10 Site Preparations
G20 Site Improvements
G30 Site Mechanical Utilities
G40 Site Electrical Utilities

1.0 PROJECT DESCRIPTION

P677 TECOM Academic Instruction Facility

The P677 Training and Education Command (TECOM) project will consist of a multi-story building (68,746 Gross Square Feet) used as an Academic Instruction Facility.

The building consolidates the operations of four distinct branches (MSTP, MCCLL, C2TECOE, and MCCMOS) into a single training facility. The function of the new building is to separate the individual operations of each branch and to combine the similar operations across all users. Branch operations are divided within their own wings and floors to maintain a separation between the various functions and securities of the different groups.

The entry element of the building is used as a landmark for the three-story structure. This major focal point ushers in visitors, students, and faculty. It is important as an architectural symbol of the unification of the four branches that constitute TECOM. Within this area at the heart of the building, the central circulation core ties the wings of separate branches together. These branches are able to function as self-contained limbs as needed, but they still share the common functions at the building core. The arrangement of spaces around these two double loaded corridors keeps the circulation straightforward and intuitive. The building form is responsive to these corridors from which, one can access nearly any space.

On the first floor, beyond the vestibule, the lobby is the building's most public area, adjacent to the restrooms and showers, stairs, and elevator. The spaces within this area form the vertical circulation and service core at the building's heart, repeating on floors above. Within the lobby, an access control station looks out over the entry and the parking lot, thereby assisting in controlling the building's security. There is a single corridor to access building spaces on this floor. MSTP office and storage spaces are separated from the MCCMOS functions. With the exception of the MCCMOS storage area, instructor and classrooms all MCCMOS spaces reside on the south facing walls to take advantage of bountiful natural daylight and views. The MCCMOS spaces consist of a break area, a flexible work cell, a small arrangement of private offices and open work stations, SIPR vault room, storage, a large divisible classroom, and instructor work space. On the first floor, there is also a loading dock, the stairwell #2, a data room, an electrical closet, elevator equipment room and a mechanical room.

Because of the natural topography of the site, the second floor is at grade at the north side of the site. The corresponding area on the first floor is below grade and held back by retaining walls. There is secondary access to the north wing, which connects to the central circulation core. The north stairwell #3 connects the second and third floors, the central stairwell #1 connects all three floors, and stairwell #2 continues all the way to the attic in order to access the mechanical space.

On the second floor, a main corridor connects the north entrance to the core of stairwell #1. C2 TECOE has a large divisible classroom (without windows), IT Net Storage space, the C2 Learning Center, and Break out areas. A large break room is located in proximity to the restrooms and central core. Also on the building's north side is a large COC training pad for C2 TECOE operations, protected by a 10' high fence. A Fire Protection room and an Electrical room are located at the building's (northeast) corner. MSTP Admin facilities make up the remainder of the second floor on the south wing. This space holds private offices, open office work stations, a break area, a conference room, print and file areas, and some storage.

On the third floor, the north wing is split by a corridor between MCCLL and C2 TECOE offices. MCCLL and C2 TECOE accommodate private offices and open work stations. Within their area, there is also an MCCLL storage room and space for print/file. There is a shared conference room for 8-12 people to be used primarily by MCCLL and C2 TECOE. A shared break area is also located in this zone and is available for each user on this floor (MCCLL, C2 TECOE, and MSTP). There are more shared conference rooms to be used by MCCLL, C2 TECOE, and MSTP: one accommodating 16-25 people, and another

accommodating 8-10 people. MSTP's BSTF (Battle Staff Training Facility) operates on the south wing of the building. The BSTF is comprised of a War Room, an Executive Video Teleconference Room, a Control Room, a Data Center, a flexible cell, one large divisible command center, a classroom, 5 breakout rooms, a C2 Lab, offices for the branch heads, and the Modeling and Simulation Center.

Above the third floor, a stairwell connects to an attic space within the roof which will house the HVAC equipment for the building.

The building will consist of precast concrete and brick veneer backed by reinforced concrete masonry unit (CMU). There are two roof systems, steep sloped standing seam metal roof and low sloped modified bitumen. The interior will be finished with a combination of tile, carpet, painted metal stud and CMU walls, suspended gypsum board, acoustical ceiling panels and raised access flooring to accommodate computer wiring.

Exterior architecture will be of Georgian style, including brick veneer and precast concrete trim, with proportions and details to fit the dimensions and overall exterior appearance of other campus buildings, such as Breckinridge and Singleton Halls. The exterior features of the P677 TECOM facility will be in conformance with Quantico's Base Exterior Architecture Plan (BEAP) for the Marine Corps Base (MCB), Quantico.

The P677 TECOM facility will be designed to achieve a "Leadership in Energy and Environmental Design" (LEED) NC 2009 Silver rating. The design build team will both register the project and submit all required documentation for certification to LEED NC 2009 Silver rating to United States Green Building Council (USGBC)

This project includes design-build scope of work to construct a complete and usable facility. The drawings included in Part Six of this RFP depict the conceptual design. It is the Contractor's responsibility to complete the design and construct the facility in compliance with the overall prescriptive and performance requirements in the RFP.

2.0 PROJECT OBJECTIVES

2.1 Mission Statement

The Marine Corps Training and Education Command (TECOM) is the primary training command for the United States Marine Corps. The TECOM mission is "to develop, coordinate, resource, execute and evaluate training and education concepts, policies, plans, and programs to ensure Marines are prepared to meet the challenges of present and future operational environments." The TECOM facility will consolidate the functions of four TECOM organizations: Command and Control Training and Education Center of Excellence (C2 TECOE), Marine Corps Civil Military Operations School (MCCMOS), Marine Staff Training Program (MSTP), and Marine Corps Center for Lessons Learned (MCCLL).

2.2 Facility Function

The Academic Instruction Facility will support the missions of the TECOM of the Marine Corps University at Quantico, Virginia. Spaces within the building include instruction classrooms, administrative offices, conference rooms, shower and locker rooms, storage, a BSTF training facility that includes a War Room, and a large passenger elevator.

2.3 Project Specific Priorities

The exterior features of the P677 TECOM facility will be in conformance of the Quantico's Base Exterior Architecture Plan (BEAP) for the Marine Corps Base (MCB), Quantico. The project will be of Georgian style, including brick veneer and cast stone trim, with proportions and details to fit the dimensions and overall exterior appearance of other campus buildings, such as Breckinridge and Singleton Halls. Durability of materials is of primary importance to this facility, Special attention to finishes, hardware, and fixtures are critical for the success of the project.

2.3.1 Sustainable Design

Integrate sustainable strategies and features into the design to minimize the energy consumption of the facilities, conserve resources, minimize adverse effects to the environment, and improve occupant productivity, health, and comfort to reduce the total cost of ownership of the project using a whole building, life-cycle approach. The facility and all site features shall be designed and constructed using USGBC LEED-NC 2009 unless award of project is delayed until after July 1st, 2015. The design and construction shall incorporate sustainable design strategies and features to the fullest extent possible, consistent with mission, budget and client requirements. The design shall be in accordance with UFC 1-200-02, *High Performance and Sustainable Building Requirements*.

Government acceptance testing will be required as outlined in ECB 2008-03, *Acceptance Testing of Critical Systems*, which can be downloaded from www.wbdg.org/ccb/NAVFAC/ECB/ecb_2008_03.pdf.

The sustainable design rating level for the project is to achieve LEED-NC 2009 Silver and the constructed facility shall be certified by the USGBC as having met the USGBC LEED-NC 2009

requirements for the required rating level.

The USGBC LEED 2009 Minimum Program Requirements (MPR) 6 requires post certification energy and water data. DoD has received a blanket exemption from this MPR 6 requirement, however the LEED Online Project Information (PI) Forms must be filled out correctly to qualify for the exemption. Provide the PI Form 1 information in accordance with the instructions titled "MPR 6 Department of Defense Exemption Process" posted on the Whole Building Design Guide to indicate the applicability of the DoD exemption. These instructions can be found at the following weblink: http://www.wbdg.org/references/pa_dod_sust_leed.php.

The following USGBC LEED-NC 2009 credits and additional requirements are mandatory.

a. PRE 1 Construction Activity Pollution Prevention

b. SS-4.2 & 4.3 Alternative Transportation – Bicycle Storage and Changing Rooms; Low Emitting and Fuel-Efficient Vehicles

c. SS-5.2 Site Development – Maximize Open Space

d. SS-6.1 & 6.2 Stormwater Design – Quantity and Quality Control

e. SS-8 Light Pollution Reduction

f. PRE 1 Water Use Reduction: 20% Reduction

g. WE-1 Water Efficient Landscaping: Reduce by 50%

h. EA-1 Optimize Energy Performance. In addition to LEED energy modeling calculations, for new construction achieve a 30% energy use reduction below ASHRAE 90.1-2007 or the International Energy Conservation Code (IECC) for low rise residential facilities. For renovations, reduction shall be 20% below pre-renovations 2003 baseline. Reduction shall be calculated in accordance with US Code of Regulations 10 CFR 433, 434, 435 dated Dec. 4, 2006.

i. EA-4 Enhanced Refrigerant Management. Reduce use of Ozone Depleting and Global Warming Compounds. Eliminate the use of ozone depleting compounds during and after construction where alternative environmentally preferable products are available.

j. MR-2 Construction Waste Management: Divert 50% from Disposal.

k. MR-4 Recycled Content: 10%. For EPA Designated products, use products meeting EPA's recycled content recommendations.

l. MR-6 Rapidly Renewable Products: Use products made from rapidly renewable resources.

m. EQ-3.1 & EQ-3.2 Construction IAQ Management: During Construction & Before Occupancy

n. EQ-4.1, 4.2, 4.3, 4.4 Low Emitting Materials. Specify materials & products with low pollutant emissions, including adhesives, sealants, paints, carpet systems and furnishings.

o. EQ-7.1 Thermal Comfort: Design. Design to ASHRAE Standards 55-2004 for Thermal Comfort

and 62.1-2004 for Ventilation for Acceptable Indoor Air Quality.

p. EQ-8.1 Daylight & Views. Achieve a minimum daylight factor of 2% excluding direct sunlight in 75% of all space occupied for critical visual tasks. Provide automatic dimming controls or accessible manual controls and appropriate glare control.

q. Moisture Control. Establish and implement a moisture control strategy for controlling moisture flows and condensation to prevent building damage and mold contamination.

r. Bio-Based Products: For USDA designated products use products meeting or exceeding USDA's bio-based content recommendations.

s. Certified Wood: Use certified sustainable wood products.

t. Energy Efficient Products: All energy using products shall either be Energy Star or FEMP recommended efficiency. Where Energy Star or FEMP recommendations have not been established, efficiency shall be in the top 25% for the type of product procured. All energy using products shall also meet FEMP requirements for low standby power consumption.

The following LEED-NC 2009 credits are not applicable to the project and must not be used by the Contractor to obtain the LEED certification.

a. EA-6 Green Power

Ensure sustainable strategies and features in the design phase are incorporated in the construction phase.

2.3.2 Storm Water Management (Low Impact Development)

Provide low impact development (LID) strategies for compliance with DoD Policy on Implementing Section 438 of the Energy Independence and Security Act (EISA), dated 19 January, 2010 and Penn Memo/NAVY Low Impact Development (LID) Policy, dated 16 November, 2007. Comply with UFC 3-210-10, "LOW IMPACT DEVELOPMENT", dated 15 November 2010. These policies are in addition to State or Local storm water management program permit requirements. The DOR shall balance all requirements, Federal, State, Local, LEED and the above stated policies, and acquire required regulatory permits when managing storm water generated.

2.3.3 Energy Conservation

Energy conservation shall be in accordance with UFC 1-200-02, High Performance and Sustainable Building Requirements.

2.3.4 Building Commissioning

The Government will engage an independent third party to serve as the Commissioning Authority (CxA) for this project. The Design-Builder shall cooperate in coordination efforts with the third

party CxA during the Post Award Phase and shall participate in commissioning activities including, but not limited to: Post Award Phase commissioning kick-off meeting and other selected commissioning team meetings, CxA design reviews, commissioning tests, and resolution of system design deficiencies identified during the commissioning effort. Refer to the prescriptive commissioning specifications in Part 5 for a detailed description of the commissioning requirements for the project.

2.3.5 Accessibility Requirements

Provide barrier-free design in accordance with the requirements of the DEPSECDEF Memorandum "Access for People with Disabilities" dated Oct 31, 2008. The memorandum updates the DoD standards for making facilities accessible to people with disabilities. The US Access Board issued an update of the accessibility guidelines which the DEPSECDEF Memorandum implements with military unique requirements specified in the memorandum attachment. The new DoD, "ABA (Architectural Barriers Act) Accessibility Standard" (DoD ABAAS) and the DEPSECDEF Memorandum are located at http://www.access-board.gov/ada%2Daba/aba-standards-dod.cfm .

2.3.6 Antiterrorism Criteria

Design the facility to comply with the most current version of UFC 4-010-01, DoD Minimum Antiterrorism Standards for Buildings.

Facility will have an occupancy designated as primary gathering in accordance with UFC 4-010-01.

Facility will be 3 stories or greater and will be required to meet the progressive collapse avoidance standards per the most current version of UFC 4-023-03, Design of Buildings to Resist Progressive Collapse.

Facility is within a controlled perimeter. Information regarding explosive weights is for official use only and will be provided upon award of contract to the winning contractor. For information, the controlled perimeter for Quantico is the Potomac River and the main gates and fence line for the base.

Facility minimum standoff distance is 30 feet from parking and roadways.

Facility conventional construction standoff distance is 52 feet from controlled perimeter.

Develop the site to provide the standoff requirements listed in UFC 4-010-01. Maintain unobstructed space requirements of the UFC.

All design submittals indicated in UFC 4-010-01, DoD Minimum Antiterrorism Standards for Buildings, are required to be submitted for review during the design phase of the project. Additional submittals may be required to show compliance with specific standards.

2.3.7 Secured Areas

Provide secured areas within the building that comply with the SECNAV M-5510.36 Department of Navy Information Security Program. Provide accredited secured areas to include the following spaces:

- Data #111, 224 and 337
- Security #116, Storage 1 and 2 #117, 118
- Secure Storage #118A
- PUBS & Admin Storage #118B
- Open Office #120, 217, 311, 317, 325A and 325D
- SIPR #126
- Classroom #208 and 322
- IT Net Storage #213
- C2LC #214 and 331
- Breakout #215, 216, 331, 332, 333, 334, 335 and 336
- MSTP, Offices #217A, 217B, 217C, 217D, 217E, 217F, 217G, 217H, 217J, 217K, 217L, 217M, 311A, 311B, 311C, 311D, 311E, 311F, 311G, 311J, 311H, 317A, 317B, 317C, 317D, 317E, 317F, 317G, 317H, 317J, 317K, 325C and 329
- Conference #222, 313, 318 and 330
- Corridor #319
- Shared Control Room #320
- MSTP, War Room #321
- MSTP, Command Center
- MSTP, Modeling & Simulation #325
- MSTP, M&S Server 325B

The perimeter of these spaces shall define the secured area. Refer to the RFP Part 3, Room Requirements and Part 6, Security Plans to further define the secured area requirements.

2.4 Appropriate Design

Comply with UFC 1-200-01, General Building Requirements for planning and design requirements for this project. Architectural compatibility will also be in compliance with the Marine Corps Base, Quantico BEAP. The building will be Georgian style, similar to many other structures found on the base. Durability of materials is of primary importance and shall provide a minimum 30 year life span.

2.5 Workflow Process

The facility employs full time staff providing instruction to students throughout the week. All tenants operate independently and conduct training in accordance with their own schedules.

2.5.1 Hours of Operation

The facility is operating during standard work hours, however, training exercises and classes may require the facility to be open and operational during non-standard work hours. The P677 Training and Education Command (TECOM) will operate 7:30 AM to 9:00 PM, seven days a week, excluding government recognized holidays.

2.5.2 Staffing/Occupancy

The total planned occupancy for this facility is 679 persons (PN) with a regular staff of 382 PN and an average student population of 197 PN. An influx of approximately 100 additional students is anticipated up to four times a year for durations of 10-15 days.

The number of occupants specified in the RFP are identified for programming purposes. Occupancy used to design building features, such as structural, egress, and plumbing fixtures shall be determined as required in applicable building or life safety codes.

2.6 Special Design Challenges

The dramatic natural sloping of the site was a main concern in the massing of the building. Due to the change in grade, it was important to maximize the buildable area while minimizing the disturbance to the natural site. The design responds well to the site's natural drainage patterns and topography. Parking and location of the building on the site is important to preserve existing trees and reduce the need for unnecessary site grading/construction.

The program has many different users, each with many distinct functions and sizes of spaces. Within one branch alone, there are conference rooms, offices, classrooms, and data centers. Some branches couldn't be near others. Some functions had to be collocated with others. Understanding each user and their mission for operating within each space was necessary to facilitate the appropriate arrangement of the building. Additionally, the building footprint is an overall reduction in existing square footage used within each branch. Ultimately, the circulation had to be optimized to access as many spaces within as small an amount of square footage as possible. The arrangement lent itself to building wings separating each branch and corridors separating functions where necessary. Due to the varying size of the spaces much consideration had to be given to their organization. The result is a very tight and efficient floor plan which meets the user's requirements while focusing on the building's shared amenities.

Throughout design, there were many requirements of the program that determined the arrangement of the building. The massing of the building on the site demanded an appropriate entrance condition such that large spans of retaining wall were not left exposed to the entry. A terraced public area at the building's entry resulted.

2.7 Adaptability and Flexibility

Should building occupants or organizations change, it is necessary that the facility be flexible to accommodate any adjustment. The entry/core element performs well with any occupant, as it is an elegant architectural gesture that is sure to enhance any user group occupying the building. The arrangement of spaces around two double loaded corridors keeps the circulation straightforward and intuitive. From these corridors, one can access nearly any space. Windows have been placed to allow natural light into the spaces wherever possible. The structural arrangement of columns has been designed around the circulation diagram for the building. Columns are integrated into walls where possible to minimize the intrusion of structure into the space.

3.0 SITE ANALYSIS

3.1 Existing Site Conditions

The project site, approximately 10 acres in size, was once a residential development located within the northeast area of Marine Corps Base (MCB), Quantico. The residences have since been demolished, however, there is uncertainty to what extent their foundations have been removed. All above ground concrete has been shown in the survey. The site is bordered to the east by Quantico Creek, a tidal tributary of the Potomac River; to the west by Geiger Road; to the south by Louis Road; and wooded area to the north. A 100-foot buffer from the mean high water mark is required by the Chesapeake Bay Preservation Act for all streams and rivers. Access to the site is provided from Fuller Road, the main thoroughfare through the Base, by Geiger Road to the southwest and Little Road to the southeast. McCarthy Road divides the site, connecting Little Road and Louis Road. There is not enough information to determine if there are existing foundations that are unseen and will need to be removed. If these are encountered during construction, this would be considered an unforeseen condition.

The site contains significant relief, with elevations ranging from 83 to 26 feet NGVD. Steep slopes rise from Quantico Creek to the eastern and northeastern limits of the project site. The site generally slopes from northeast to southwest with steeper slopes connecting tiers of relatively level ground centered on the three existing roads.

Buck Keys Cemetery is located southeast of the project site, between McCarthy and Louis Roads and west of Little Road. A 50-foot buffer will be maintained outside the cemetery fence, within which, no development shall take place.

Two bald eagle nesting sites are located in proximity to the project site; however the project site is outside of the 660-foot nest buffer established in the Bald and Golden Eagle Protection Act.

3.2 Site Development Requirements

Site layout shall be as indicated.

Utility connections work to support the new building, grading and storm drainage collection shall be accomplished within the specified limits.

Provide fire department access to two sides of the Academic Instruction Facility. The access shall be vehicle rated for the heaviest emergency vehicles for Quantico Base, with all weather surfaces conforming to UFC 3-600-01 and NFPA 1. Coordinate landscaping and ATFP measures with the fire department access. Site access shall accommodate base fire apparatus for turning radius, weight (with water storage), and width. The Contractor shall ensure that adequate curb radii have been incorporated where emergency access lanes are perpendicular to other emergency access lanes based on Quantico Fire Department turning radii specifications.

This site contains a cohesive subgrade that is susceptible to weakening and may require soil modification.

Prior to start of any soil work, all the subgrade soils beneath building foundations, structural slabs, and pavement on the Project Site shall be evaluated to determine the suitability of subgrade soils, if soils require stabilization and to what extent. When stabilization is required, stabilize soils by use of Lime or Fly Ash & Cement or by Cement only, by an experienced specialty contractor who has been doing such work for the last ten years and is familiar with the soils on Navy, Marine and Air Force Bases in the area.

The depth and extent of soil modification shall be as recommended by the soil modification specialty company engineer who is familiar and done work with the area soils.

To prevent harm to personnel in adjacent areas, soil modification materials shall be applied in slurry form and not in dry form.

Potable water shall be used for mixing to achieve the required density. The minimum density shall always be 95% of ASTM D698, except the last foot below the base of foundations and pile caps shall be 98% of ASTM D698.

It should be noted that the Contractor shall engage the soil modification specialty subcontractor prior to bidding the project, so that the price of soil modification is included in the bid price.

Prior to starting the soil modification work on the project site, Contractor and the Specialty Contractor shall meet with the Contracting Officer to describe the soil modification process, the materials to be used and the safety precautions to be taken.

3.2.1 Soil Stabilization

Stabilize, by soil modification, subgrade soils beneath pavements shall be a minimum of two (2) feet, or deeper as recommended by the soil modification specialty company engineer.

3.2.2 Building Layout

Building layout shall be as shown in the attached plans. Any deviation from building layout requires

Government approval. Setback, clearance and adjacencies are in accordance with UFC 4-010-01 and International Building Code (IBC).

3.2.3 Vehicular Access and Circulation

Provide two lane ingress/egress connections to the parking lots as indicated. The minimum entrance width shall be 24 feet. Fire department and emergency vehicle access width shall be a minimum of 20 feet.

Sidewalks may be designed to function for both pedestrian and vehicular access as indicated. Minimum walk widths shall be 5 feet.

3.2.4 Service Access

The service areas required for vehicular access shall be integrated with sidewalks and parking layouts. Removable bollards shall be provided to prevent unauthorized vehicles from encroaching on AT/FP standoff distance.

3.2.5 Parking

Provide parking spaces to support students, staff and visitors as shown in the attached drawings located in Part 6. Minimum dimensions and geometry for parking areas shall conform to UFC 3-201-01. Any deviation to the layout and configuration of the parking area requires Government approval.

Specific requirements for parking are outlined in Section G2020, Parking Lots.

3.2.6 Site Signage

Provide site signage for the new facility and surface parking area in compliance with Marine Corps Base, Quantico Base Exterior Architecture Plan (BEAP) and the Federal Highway Administration Manual of Uniform Traffic Control Devices (MUTCD).

3.2.7 Trash Dumpster Pads

Provide standard reinforced Portland cement concrete dumpster pad. Provide brick screen walls on three sides. Brick screen wall shall be compatible with the building exterior. Provide an ornamental aluminum, vertical picket gate with screening material. Provide a 10-foot minimum concrete apron in front of the dumpster enclosure. See drawings in Part 6 of this RFP for location of the dumpster pad.

3.2.8 Landscaping

Provide landscaping (deciduous and evergreen trees, shrubs and bushes) to define and complement the building architecture, screen views, provide solar and wind screening and create boundaries.
The landscape design shall incorporate groupings, foundation plantings and street tree planting to define the open spaces and to provide a complete landscaped project.

3.2.9 Site Utility Requirements

Provide water (domestic and fire), sanitary sewer, storm sewer, storm water management features,

electric (power and site lighting), telephone and cable television services to the new facilities and coordinate with ATFP requirements. Points of connection shall be as indicated on the drawings or as approved by the Contracting Officer. Unless otherwise specified, all utility services shall be run underground. Utilities shall not be run under or within 10 feet of buildings except as required to make building connections.

3.2.10 Stormwater Management

Provide stormwater management designed to comply with the Virginia Stormwater Management Handbook. The Contractor shall contact MCB Quantico Natural Resources and Environmental Affairs Branch (NREAB) to discuss current and future condition of the site and stormwater discharge restrictions. In accordance with "NAVFAC Capital Improvements Engineering & Construction Bulletin (ECB) 2008-01: Energy Policy Act of 2005 Implementation and USGBC LEED® Certification", dated 13 December 2007, LEED Sustainable Sites Credits 6.1 and 6.2 for Stormwater Quantity Control and Stormwater Quality Control, respectively, shall be achieved. The use of LID strategies shall be incorporated to maintain, to the maximum extent technically feasible, the predevelopment hydrology of the site. Permeable pavement, permeable pavers and open grid paver systems will not be permitted.

Specific requirements for stormwater management are outlined in Section G3030, Storm Sewer. Storm drainage and stormwater management shown on CG101 and CG102 is conceptual. The Design-Builder shall be responsible for the design of storm drainage and stormwater management to comply with criteria referenced in the RFP. The required number of parking spaces shall not be reduced. The Design-Builder shall preserve existing trees to the greatest extent possible.

3.2.11 Permitting

Permitting will be required. The anticipated permits for this project are indicated in the List of Anticipated Permits located in Part 6. The Contractor shall contact MCB Quantico NREAB, Air Program Manager, 703-432-0529, if any temporary or permanent fuel-fire water heaters and/or electrical generators will be used during the construction and as permanent equipment for this project.

The project site is within the Chesapeake Bay Preservation Area (CBPA) and the disturbed area is greater than five acres. The Contractor shall apply for and obtain a Construction General Permit for Discharges of Stormwater from Construction Activities (VAR10) under the Virginia Stormwater Management Program (VSMP) for Phase I Land Clearing ("large" construction activity) at least 14 days prior to land disturbing activities. A Stormwater Pollution Prevention Plan (SWPPP) is required.

The Contractor shall submit the SWPPP and VSMP Permits to NREAB for review and approval. The NREAB review and approval period of 45 days shall be included within the construction schedule.

3.2.12 Geotechnical

This site contains a cohesive subgrade that is susceptible to weakening and may require soil modification. Prior to start of any soil work, all the subgrade soils beneath building foundations, structural slabs, and pavement on the Project Site shall be evaluated to determine the suitability of subgrade soils, if soils require stabilization and to what extent. When stabilization is required, stabilize soils by use of Lime or Fly Ash & Cement or by Cement only, by an experienced specialty contractor who has been doing such work for the last ten years and is familiar with the soils on Navy, Marine and Air Force Bases in the area. Prior to starting the soil modification work on the project site, the Contractor and the Specialty Subcontractor shall meet with the Contracting Officer to describe the soil modification process, including materials to be used, and describe all safety precautions during the soil modification and stabilization

process.

The depth and extent of soil modification shall be as recommended by the experienced Specialty Contractor.

To prevent harm to personnel in the adjacent areas, soil modification materials shall be applied in slurry form and not in dry form.
Potable water shall be used for mixing to achieve the required density. The minimum density shall always be 95% of ASTM D698, except the last foot below the base of foundations and pile caps shall be 98% of ASTM D698.

The Contractor shall engage the soil modification Specialty Subcontractor prior to bidding the projects. Price of soil modification and stabilization shall be included in the bid price.

All construction, including the construction of the foundations, shall be in accordance with EM-385 Manual regulations. Note: the building and site configuration change from the time the geotechnical site exploration was performed.

THIS PAGE HAS BEEN INTENTIONALLY LEFT BLANK

4.0 BUILDING REQUIREMENTS

4.1 Space Tabulation

Space Name	# of spaces	Unit SF (Net)	Total SF (Net)	Total SQM (Net)	Remarks
Lobby	1	442	442	41.06	
Vestibule	1	88	88	8.18	
Stair 1	3	192	576	53.51	
Stair 2	4	Varies*	896	83.24	
Stair 3	2	Varies*	383	35.58	
Stair 4	2	191	382	35.49	
Corridor	11	Varies*	5750	534.19	
Janitor	6	Varies*	149	13.84	
Elevator Equipment	1	70	70	6.50	
Women's Toilet/Shower	3	Varies*	704	65.40	
Men's Toilet/Shower	3	Varies*	1475	137.03	
Elevator	3	78	234	21.74	
Electrical	8	Varies*	465	43.20	
Loading Area	1	198	198	18.39	
Mechanical	2	Varies*	1321	122.72	
Data	3	Varies*	757	70.33	
Fire Protection	1	104	104	9.66	
Mechanical Chase	5	Varies*	156	14.49	
Shared Spaces					
Conference	3	Varies*	918	85.28	
Break Area	1	696	696	64.66	
Control Room	1	557	557	51.75	
MSTP					
Open Office	1	1422	1422	132.11	
Security	1	85	85	7.90	
Storage 1	1	953	953	88.54	
Secure Storage	1	342	342	31.77	
Storage 2	1	688	688	63.92	
Pubs & Admin Storage	1	527	527	48.96	
Conference Room	2	Varies*	1017	94.48	
Open Admin	1	9138	9138	848.95	
Private Office	10	Varies*	1537	142.79	
Shared Office	4	Varies*	856	79.53	
Break Area	1	365	365	33.91	
Flex Space	1	248	248	23.04	
EVTC	1	416	416	38.65	
War Room	1	1145	1145	106.37	
Classroom	1	710	710	65.96	
Command Center	1	2511	2511	233.28	
Breakout	5	295	1475	137.03	

C2 Lab	1	295	295	27.41	
Modeling & Simulation	1	2495	2495	231.79	
M&S Tech. Open Office	1	340	340	31.59	
M&S Server	1	109	109	10.13	
M&S Open Office	1	1157	1157	107.49	
MCCMOS					
Storage	1	265	265	24.62	
SIPR	1	115	115	10.68	
Open Admin	1	391	391	36.33	
Private Office	3	Varies*	417	38.74	
Breakout	1	298	298	27.69	
Break Area	1	570	570	52.95	
Classroom	1	2588	2588	240.43	
Instructor	1	1239	1239	115.11	
C2 TECOE					
Break Area	1	575	575	53.42	
Classroom	1	4004	4004	371.98	
IT Net Storage	1	1213	1213	112.69	
C2LC	1	949	949	88.16	
Breakout	2	293	586	54.44	
Open Admin	1	1796	1796	166.85	
Meeting Rm	2	293	586	54.44	
Private Office	7	Varies*	1179	109.53	
MCCLL					
Storage	1	150	150	13.94	
Open Admin	1	1405	1405	130.53	
Private Office	11	Varies*	1238	115.01	
Subtotal Net Area			63716	5919	
Net to Gross Factor			1.07895	1.08	
TOTAL GROSS AREA			**68746**	**6387**	
The design build contractor shall provide actual area in both square feet and square meters in proposals. *Multiple rooms/various sizes. Refer to floor plans, Part 6					

4.2 Space Relationships

Space relationships are as indicated on the floor plans. See floor plans in Part 6 attachments.

4.3 Exterior Character

The siting of the building on a large slope provides an interesting, almost natural effect of the building sitting comfortably on the site for which it was designed. The entry element of the building is used as a landmark for the three-story Georgian style structure. This major focal point ushers in visitors, students, and faculty. It is important as an architectural symbol of the unification of the four branches that constitute TECOM. Within this area at the heart of the building, the central circulation core ties the wings of separate branches together. The building form is responsive to these central circulation corridors.

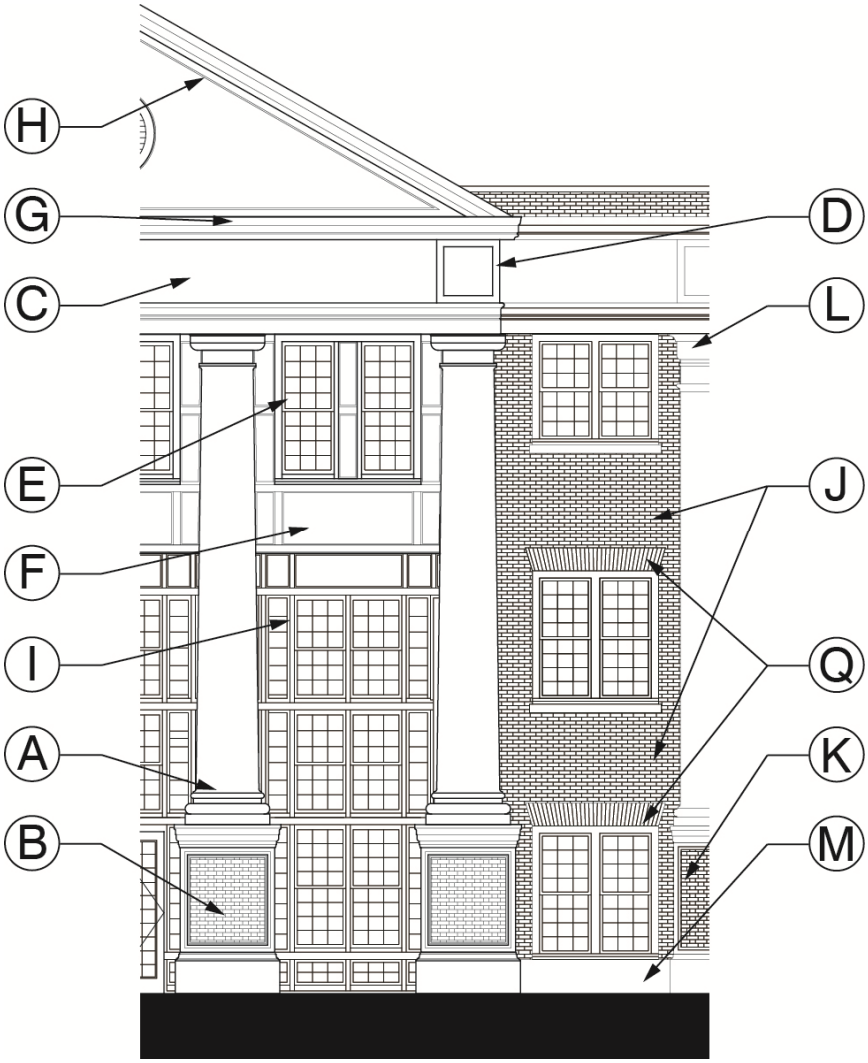

Clip of South Elevation near building entry/connector

The entry is oriented to the directions most commonly approached by vehicles to the South. A drop-off area in front of the building is integrated with vehicular circulation. The entry volume is defined by columns, third floor spaces, precast concrete entablature, and a gabled roof.

Proportionate Doric columns (**A**) contrast with the otherwise predominantly brick façade, giving the entry a light, airy, welcoming feeling. They sit on brick bases (**B**) framed in ornamental brick and including precast elements. The precast concrete banding surrounding the exterior building façade aligns with the top of these brick bases. Columns uphold the precast entablature above (**C**) to give the entry a feeling of lightness in contrast with the weight of the brick walls on the building mass. The entablature includes space for building signage (if base required) at the building's front (South) entry. Aside from areas with signage, the entablature features square detailing (**D**) above columns and pilasters. On the third floor, large windows (**E**) bring light into those spaces and maintain the weightlessness of the entry portico. Raised decorative urethane panels (**F**) surround these third floor windows on the entry. Paneling aligns with the window mullions to reinforce the proportions of the window wall. The urethane panels continue on the underside of the third floor to carry the column lines to the engaged pilasters on the entry window wall. The glass entrance doors are covered by these enclosed spaces above the portico. The entry portico is lit at night for safety and security. The trim style used at the cornice (**G**) continues to the inset of the roof gable (**H**). The rear entry features similar elements sized to their own proportion.

The distinction between the entry and the brick building mass is emphasized by using a window wall system at the entry (**I**). The window wall is composed of tall windows and thinner with single width

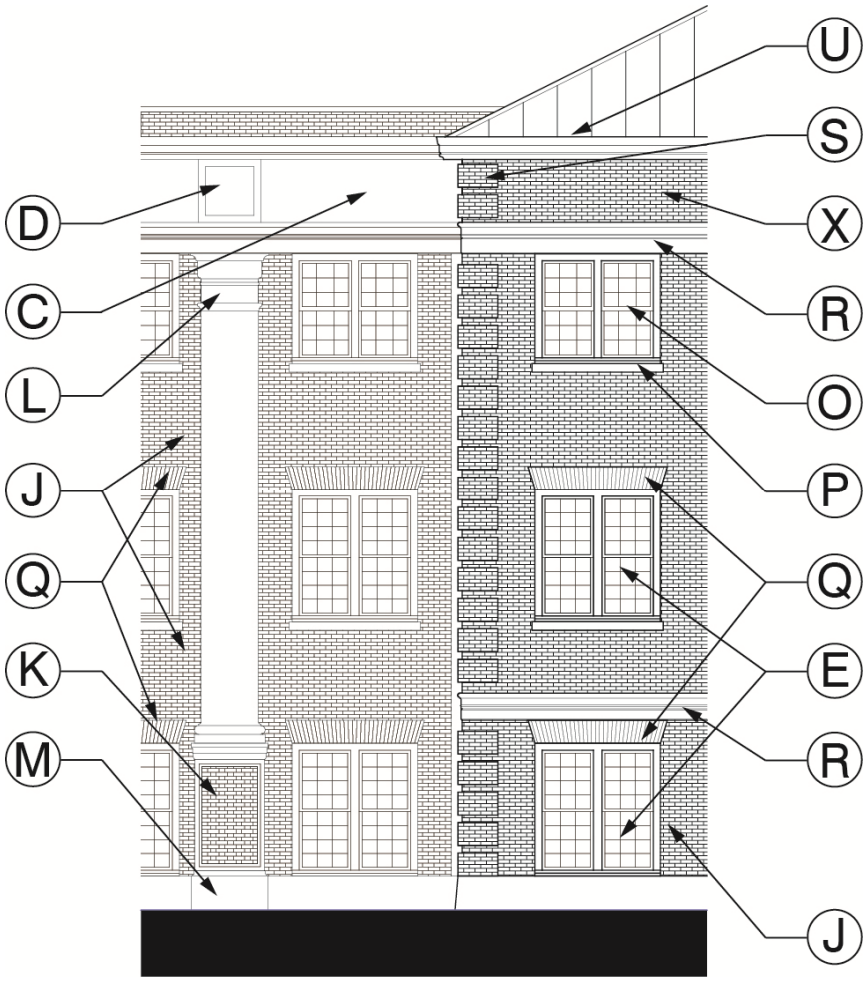

Clip of South Elevation near connector/building mass

windows adjacent. The wall brings in natural light to the communicating space and circulation corridors. Running bond brick coursing (**J**) is used on the surface connecting the entry to the rest of the building to separate expansive windows of the connecting surfaces on the West and South facades. Engaged pilasters (**K**) are used behind the entry columns (on the window wall) and at the connecting surfaces. They carry the language and spacing of the columns at the entry, but have their own proportioned capital (**L**) and base features. False windows are placed at the first floor of the West Elevation where there is grade change, and at the second floor West Elevation area. All false windows are designed with Flemish bond brick infill and sized and placed according to their glass counterparts above.

Exterior wall surfaces will have a consistent architectural vocabulary composed of double hung windows, arches and sills, quoining at corners, and horizontal banding. A battered precast concrete base (**M**) defines the portion of the first floor up to the sill of the first floor windows. Running bond brick coursing (**N**) is used on the first floor below the first concrete band. Symmetrical patterning of windows is maintained when possible and is responsive to interior walls and columns. Windows align vertically. Groupings of windows are used to maintain rhythm while also responding to interior conditions. Areas where double windows are optimal for light/views include those on lounge areas and those areas facing north towards the Potomac River. Tall windows are used on the first and second floors (**E**) to bring more daylight into the space and balance the façade. Shorter windows (**O**) are used at the third level. Windows sit on precast sills (**P**), except at the first floor, where all windows sit on the beveled precast concrete base. Above the windows, jack arches (shown at 16”) (**Q**) are used for headers. The first precast concrete band (**R**) rests atop the first floor jack arches. Doors not used for main entry are raised panel doors, with either a transom window or panel below the jack arch to maintain proportion with neighboring windows.

At the second and third floor, the field of exterior brick wall surfaces features running bond brick (**J**). Outside corners have properly proportioned quoining (**S**) running from the base to the cornice to give the building’s volume strong character (shown at 6 brick courses tall and 3.5 bricks deep on each side, each quoin separated by 2 courses of brick façade). Two rows of horizontal precast banding (**R**) are defined by the top of the column bases and the height of the third floor sash windows, leaving enough room for a proportionate entablature (**C**).

The brick entablature (**T**) is carried around the building beyond the top precast banding and below the roof with the exception of the building’s South entry and connecting volumes where the entablature is precast concrete (**C**). Directly above the entablature, the 16” cornice (**U**) protrudes 18” from the wall and

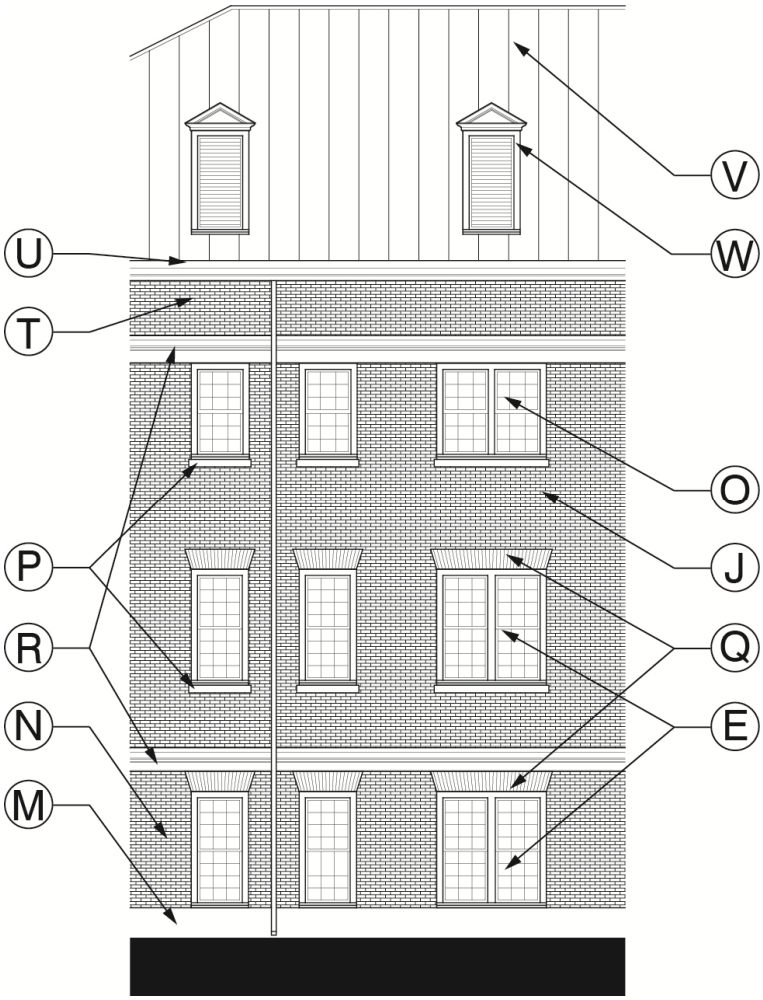

Clip of South Elevation

includes the gutter, which is to sit above the thumb moulding and fascia. The cornice is pronounced to form the uppermost line of the façade's height before the roof begins beyond. The standing seam metal roof (**V**) contrasts with the red brick and cast stone façade. Dormers (**W**) are evenly spaced and properly proportioned along the building's South and North elevations. These louvered dormers are as narrow as possible to emphasize their verticality.

Exterior lighting is used to highlight the buildings entrances and prominent architectural features. The COC training pad in the rear of the building has an ornamental aluminum fence with brick pilasters similar to those at the entry for security purposes.

THIS PAGE HAS BEEN INTENTIONALLY LEFT BLANK

5.0 ROOM REQUIREMENTS

5.0 ROOM REQUIREMENTS

Lobby (101)

Space Characteristics

Function/adjacencies: Main entrance to building and visitor's check-in.

Special Dimensions:
Ideal Plan Dimensions: As indicated on plan
Minimum Ceiling Height: Varies; 9'-0" height at low ceiling and open to 2nd floor ceiling everywhere else.

Acoustics: STC 45 Walls, NC 40

Access: Refer to Security Plans, Part Six, Security Plans

Number of Occupants: 6

Other/Special Requirements:

Uniformat Section	Description	Qty	Size	Specific Requirements
B202001	Windows	As Indicated	As Indicated	See elevations. Exterior aluminum frame ATFP compliant.
B202002	Storefront	As Indicated	As Indicated	See elevations. Exterior aluminum frame ATFP compliant.
B202003	Window Wall	As Indicated	As Indicated	See elevations. Exterior aluminum frame ATFP compliant.
B202004	Exterior Glazing	AR	AR	Insulated tinted laminated glazing in compliance with ATFP and Energy standards
C101001	Fixed Partitions	As Indicated	AR	Impact Resistant Gypsum Board on MTL studs. Partition shall extend to deck above.
C103004	Identifying Devices	AR	AR	Wall-mounted architectural signage. Building directory, partial building directory at entry to corridor.
C103009	Reception Desk	As Indicated	AR	Hardwood veneer with quartz work surface and transaction ledge – decorative front and side elevation by using, reveals, trim strips or accent veneer or combination. Provide one underneath storage cabinet with hinged door and lock, min. Provide power/data at work surface height. (FSC certified wood). Accommodate 2 people.
C301005	Corner Guards	All Outside Corners	48" High	Through color acrylic
C302001	Tile Floor Finish	AR	12"x24"x3/8"	Porcelain tile
C302007	Wall Base Finish	AR	4" High	Porcelain tile
C303001	Acoustical Ceiling Tiles & Panels	AR	24"x24"x5/8"	Combination of Pattern of Suspended Acoustical Ceiling Panels (NRC 0.90) and Suspended GWB bulkheads and borders
C303002	Gypsum Wallboard Ceiling Finishes	AR	AR	Provide 5/8" thick gypsum wallboard ceiling above reception desk.

C304006	Wall Finishes	AR	AR	Painted gypsum board
D502001	Branch Circuit Wiring			Provide 120V, 20A duplex receptacle every 25' on-center and a 120V, 20A double duplex at each workstation.
D502002	Lighting Equipment			Target Illuminance: 30 FC ambient; 10FC minimum at elevator landing. Controls: Daylight dimming with occupancy sensor over-ride. Fixture Type: Decorative, including wall sconces adjacent to elevators.
D503001	Telecommunications Systems			Provide one classified outlet and one unclassified outlet at each reception desk
D503005	Security Systems			Refer to the security drawings appendix included in part six of this RFP for security device locations and to ESRD503005 for description of contractor's responsibilities.
E2020	Movable Furnishings	AR	AR	task lights, task chairs, lounge chairs, end table, Storage Lockers; cell phone lockers (for 50), tablet lockers (for 24)

Stair (102; 124; 202; 210; 220; 221; 302; 315; 328; 338; 402)

Space Characteristics

Function/adjacencies: As indicated on plan

Special Dimensions:
Ideal Plan Dimensions: As indicated on plan
Minimum Ceiling Height: 8'-0"

Acoustics: STC 45 Walls, NC 40

Access: Refer to Security Plans, Part Six, Security Plans

Number of Occupants:

Other/Special Requirements: Underside of stair shall be covered with painted GWB ceilings. Secure Room (Open Storage Area), SECNAV M-5510.36 Department of Navy Information Security Program.

Stair #124 and #210 will also receive LKM7000 on stairway door & Von Duprin. See sections B203008 and C102007.

Stair #220, #315 and #328 will also receive LKM7000. See section C102007.

Stair #221 and #338 will also receive Von Duprin locking device. See sections B203008 and C102007.

Stair #315 will also receive, roof access hatch and wall mounted steel ladder. See section B301006.

Stair #402 will also receive a steel hoist beam (to accommodate hoisting mechanical equipment to and from the third floor)

Uniformat Section	Description	Qty	Size	Specific Requirements
B202001	Windows	As Indicated	As Indicated	See elevations. Exterior windows shall be ATFP compliant
B202004	Exterior Glazing	AR	AR	Insulated laminated glazing in compliance with ATFP and Energy standards
B203002	Glazed Door	As Indicated	3'-0"-8'-0"	See elevations. Match storefront and curtain wall. Comply with ATFP standards
B203001	Solid Door	As Indicated	3'-0"x8'-0"	Exterior metal doors with raised panel and frame. Transom above door as indicated on elevations. Comply with ATFP
B203008	Exterior Door Hardware	AR	AR	Hinges, locketset, closer, stop, finishes-BHMA 626.630.
B301006	Roof Openings	As Indicated	2'-6"x3'-0"	Insulated roof hatch w/ rails and guards as required.
C101001	Fixed Partitions	As Indicated	AR	Impact Resistant Gypsum Board on MTL studs Partitions shall extend to deck above.
C102001	Standard Interior Doors	As Indicated	3'-0"x7'-0"	Solid core stave wood, natural finish stain (FSC certified wood). Standard metal door frame, welded, and painted
C102007	Interior Door Hardware	AR	AR	Hinges, lockset, panic hardware, closer, stop, kick plate finishes-BHMA 626.630.
C103004	Identifying Devices	AR	AR	Wall-mounted architectural signage. Include room number and name or function. All code required signs.

C103014	Entrance Floor Grilles and Mats	AR	AR	Provide track off tile/mat full length and width of landing at building entrance/exit.
C201001	Interior Stairs	As Indicated	AR	Metal pan stair with concrete fill, painted steel
C201090	Stair Handrails, Guardrails and Accessories	AR	AR	Steel handrail, guardrails and ladders painted
C302004	Floor Finishes	AR	24”x24”x1/8”	Rubber tile on landings
C302007	Wall Base Finishes	AR	4” high	Rubber
C302008	Floor Finishes	AR	AR	Rubber stair treads/integral risers
C303002	Gypsum Wallboard Ceiling Finishes	AR	AR	Painted gypsum board
C304006	Wall Finishes	AR	AR	Painted gypsum board
D502001	Branch Circuit Wiring			Provide 120V, 20A duplex GFI receptacle at each landing
D502002	Lighting Equipment			Target Illuminance: 20 FC minimum on each stair tread and landing Fixture Type: 4’ long, 2-lamp fluorescent surface wall/ceiling mounted linear or wraparound Controls: Always on during occupied hours
D503005	Security Systems			Refer to the security drawings appendix included in part six of this RFP for security device locations and to ESRD503005 for description of contractor’s responsibilities.

Corridor (103; 110; 123; 201; 201A; 209; 301; 301A; 312; 319; 324)

Space Characteristics

Function/adjacencies: As indicated on plan

Special Dimensions:
Ideal Plan Dimensions: As indicated on plan
Minimum Ceiling Height: 9'-0"

Acoustics: STC 45 Walls, NC 40

Access: Refer to Security Plans, Part Six, Security Plans

Number of Occupants:

Other/Special Requirements: Secure Room (Open Storage Area), SECNAV M-5510.36 Department of Navy Information Security Program

Corridor #201 will also receive Stainless steel rails with tempered glass guards at Communicating Space. See section C103015.

Corridor #319 will also receive X-09. See section C102007.

Corridor #324 will also receive LKM7000 on main entry door. See section C102007

Uniformat Section	Description	Qty	Size	Specific Requirements
C101001	Fixed Partitions	As Indicated	AR	Impact Resistant Gypsum Board on MTL studs Partitions shall extend to deck above.
C102001	Standard Interior Doors	As Indicated	3'-0"x7'-0"	Solid core stave wood, natural finish stain (FSC certified wood). Standard metal door frame, welded, and painted
C102007	Interior Door Hardware	AR	AR	Hinges, lockset, panic hardware, closer, stop, finishes-BHMA 626.630
C103004	Identifying Devices	AR	AR	Wall-mounted architectural signage. Partial building directory at entry to corridor
C103007	Fire Extinguishing Cabinet	As Indicated	AR	Semi-recessed, painted to match walls
C103015	Handrails, Guardrails, and Accessories	As Indicated	42" High	Stainless steel rails with safety glass guards with fully recessed glazing channel at Communicating Space
301005	Corner Guards	All Outside Corners	48" High	Through color acrylic
C302001	Tile Floor Finishes	AR	12"x24"x3/8"	Porcelain tile with porcelain tile base in Corridors 110 and 103 only.
C302005	Carpet Finishes	AR	24"x24"	Carpet tile
C302007	Wall Base Finishes	AR	4" High	Rubber
C303001	Acoustical Ceiling Tiles & Panels	AR	24"x24"x5/8"	Acoustical ceiling tile
C304006	Wall Finishes	AR	AR	Painted gypsum board
D201006	Drinking Fountains	As Indicated	AR	Hi-Lo Electric Drinking Fountain

D502001	Branch Circuit Wiring			Provide 120V, 20A duplex receptacle every 30' with a minimum of one per corridor without being greater than 25' from the end of the corridor. Corridor receptacle circuits shall serve no other loads. The equipment indicated in corridor 324 consists of a plotter and general office equipment. Provide one telecommunications work area outlet adjacent to plotter and additional telecommunications work area outlets every 150 square feet. Provide NEMA 5-20, NEMA L5-20/30, and NEMA L6-20/30 receptacles for equipment connections. Coordinate outlet locations with government.
D502002	Lighting Equipment			Target Illuminance: 20 FC Fixture Type: Surface mounted fluorescent luminaires and either downlight/wall washers or recessed linear downlight/wall washers Controls: Occupancy sensor
D503004	Television Systems			Refer to the A/V drawings appendix included in part six of this RFP for A/V device locations and to ESRD503004 for description of contractor's responsibilities.
D503005	Security Systems			Refer to the security drawings appendix included in part six of this RFP for security device locations and to ESRD503005 for description of contractor's responsibilities.
E2020	Moveable Furnishings	AR	AR	Cell phone lockers (for 50), tablet lockers (for 24)

Janitor (104; 122; 204; 218; 304; 326)

Space Characteristics

Function/adjacencies: As indicated on plan

Special Dimensions:
Ideal Plan Dimensions: As indicated on plan
Minimum Ceiling Height: 8'-0"

Acoustics: STC 45 Walls, NC 40

Access: Refer to Security Plans, Part Six, Security Plans

Number of Occupants:

Other/Special Requirements:

Uniformat Section	Description	Qty	Size	Specific Requirements
C101001	Fixed Partitions	As Indicated	AR	Impact Resistant Gypsum Board on MTL studs Partitions shall extend to deck above.
C102001	Standard Interior Doors	As Indicated	3'-0"x7'-0"	Solid core stave wood, natural finish stain (FSC certified wood). Standard metal door frame, welded, and painted
C102007	Interior Door Hardware	AR	AR	Hinges, lockset, closer, stop, finishes-BHMA 626.630
C103004	Identifying Devices	AR	AR	Wall-mounted architectural signage. Include room number and name or function
C103006	Shelving	As Indicated	12"x48"	Stainless Utility Shelf, w/ 4 mop holders
C302007	Wall Base Finishes	AR	4" High	Rubber
C304006	Wall Finishes	AR	AR	Painted gypsum board
C301005	Wall Coverings	AR	24" High Above Sink	Stainless steel sheet wall guard at walls behind sink
C302010	Floor Finishes	AR	AR	Sealed concrete sloped to drain
C303002	Gypsum Wallboard Ceiling Finishes	AR	AR	Painted gypsum board
D201004	Sink	1	AR	Mop sink.
D203003	Floor Drain	1	AR	Tamper proof.
D502001	Branch Circuit Wiring			Provide 120V, 20A duplex GFI receptacle adjacent to entry door
D502002	Lighting Equipment			Target Illuminance: 20 FC

				Fixture Type: Suspended linear fluorescent industrial luminaire Controls: Occupancy sensor
D503005	Security Systems			Refer to the security drawings appendix included in part six of this RFP for security device locations and to ESRD503005 for description of contractor's responsibilities.

Vestibule (105)

Space Characteristics

Function/adjacencies: Centrally located by lobby

Special Dimensions:
Ideal Plan Dimensions: As indicate on plans
Minimum Ceiling Height: NA

Acoustics: STC 45 Walls, NC 40

Access: Refer to Plans, Part Six, Floor Plans

Number of Occupants:

Other/Special Requirements:
Vestibule #105 to receive a two-story ceiling element terminating at the underside of the third floor.

Uniformat Section	Description	Qty	Size	Specific Requirements
B202002	Storefront	As Indicated	As Indicated	See elevations. Exterior aluminum frame ATFP compliant.
B202003	Window Wall	As Indicated	As Indicated	See elevations. Exterior aluminum frame ATFP compliant.
B202001	Windows	As Indicated	AR	See elevations. Exterior aluminum frames ATFP compliant.
B202004	Exterior Glazing	AR	AR	Insulated tinted laminated glazing in compliance with ATFP standards
B203002	Glazed Doors	As Indicated	3'-0"x8'-0"	Match window wall style and finish. Comply with ATFP standards
B203008	Exterior Door Hardware	AR	AR	Automatic handicap door, hinges, lockset, panic hardware, closer, stop, finishes-to match frame finish,
B203090	Other Exterior Specialty Doors	AR	AR	Automatic swinging entrance door controllers
C102002	Glazed Interior Doors	As Indicated	AR	Match window wall style and finish.
C103014	Entrance Floor Mat	AR	AR	Fixed recessed entrance mat
C302001	Tile Floor Finishes	AR	12"x24"x3/8"	Porcelain Tile
C302007	Wall Base Finishes	AR	4" High	Porcelain Tile
C303001	Acoustical Ceiling Tiles & Panels	AR	24"x24"x5/8"	Acoustical ceiling tile
D502001	Branch Circuit Wiring			Provide 120V, 20A duplex GFI receptacle adjacent to entry door

D502002	Lighting Equipment			Target Illuminance: 10 FC Fixture Type: Volumetric compact fluorescent troffers, UL listed for damp locations Controls: Occupancy sensor with weatherproof enclosure
D503005	Security Systems			Refer to the security drawings appendix included in part six of this RFP for security device locations and to ESRD503005 for description of contractor's responsibilities.

Women's Toilet/Shower (106; 205; 305)

Space Characteristics

Function/adjacencies: Centrally located

Special Dimensions:
Ideal Plan Dimensions: As indicated on plan
Minimum Ceiling Height: 8'-0"

Acoustics: STC 45 Walls, NC 35

Access: Refer to Plans, Part Six, Floor Plans

Number of Occupants:

Other/Special Requirements: Provide concrete curb at lockers. Provide bench(es).

Uniformat Section	Description	Qty	Size	Specific Requirements
C101001	Fixed Partitions	As Indicated	AR	Water Resistant Gypsum board on MTL studs. Partitions shall extend to deck above.
C102001	Standard Interior Doors	As Indicated	3'-0"x7'-0"	Solid core stave wood, natural finish stain (FSC certified wood). Standard metal door frame, welded, and painted
C102007	Interior Door Hardware	AR	AR	Hinges, lockset, closer, stop, finishes-BHMA 626.630
C103001	Compartments, Cubicles, & Toilet Partitions	As indicated	AR	Phenolic core toilet partitions at water closets and urinals, ceiling hung
C103002	Toilet Accessories	AR	AR	Aluminum framed mirror; provide one wall mounted soap dispenser at each sink; two wall mounted electric hand dryers per bathroom; one Toilet tissue holder per toilet; Grab bars as required; one surface mounted sanitary napkin disposal units per toilet; one surface mounted toilet seat cover dispenser per toilet; one Coat Hook at each stall; one full length mirror per bathroom; two Semi-recessed trash receptacle/paper towel dispensers per bathroom; Finish: Stainless Steel; Compliant with ABA.
C103004	Identifying Devices	AR	AR	Wall-mounted architectural signage. Include room number and name or function
C103005	Lockers	AR	15"x15'x72" high	Lockers ABA compliant – one minimum; single tier; heavy duty plastic
C103008	Counters	AR	AR	Solid acrylic
C103009	Cabinets	AR	AR	Plastic laminate clad apron at sinks. (FSC certified wood).
C301004	Wall Finishes	AR	4-1/4"x4-1/4" x 5/16"	Glazed ceramic tile. Toilet: 60" high wainscot; shower: full-height. Epoxy paint above wainscot.
C302001	Tile Floor Finishes	AR	2"x2"x1/4"	Unglazed porcelain tile

C302007	Wall Base Finishes	AR	2”x2”x1/4”	Unglazed porcelain tile, cove
C304007	Ceiling Finishes	AR	AR	Epoxy painted gypsum board
D201001	Water Closets	3	AR	ABA compliant – one minimum; provide manual flush valve, wall hung water closets
D201003	Lavatories	3	AR	ABA compliant – one minimum; under counter mounted, provide manual faucet controls for lavatories.
D201005	Shower	As Indicated	3’-0”x3’-0”	ABA compliant – one minimum per room; Terrazzo pan. Transfer style with grab bars and blocking for a bench. No bench to be provided, only blocking for future bench requirement. Shower heads shall be fixed. Thresholds shall be provided to prevent water from flowing from the shower.
D203003	Floor Drain	2	AR	Tamper proof.
D502001	Branch Circuit Wiring			Provide 120V, 20A GFI duplex receptacle adjacent to sink (one for every two sinks). Provide 120V, 20A GFI duplex receptacle adjacent to entry door for maintenance. Provide general purpose 120V, 20A GFI duplex receptacle every 25’ on-center. Do not install receptacles in shower area. Provide electrical connection for electric hand dryers.
D502002	Lighting Equipment			Target Illuminance: 20 FC ambient; 30 FC vertical at mirror Fixture Type: Recessed 2’x4’ troffer with A12.125 acrylic lens, UL listed for wet locations Controls: Manual On/Off switch Provide lighting fixtures with standby battery backup

Men's Toilet/Shower (107; 203; 303)

Space Characteristics

Function/adjacencies: Centrally located

Special Dimensions:
Ideal Plan Dimensions: As indicated on plan
Minimum Ceiling Height: 8'-0"

Acoustics: STC 45 Walls, NC 35

Access: Refer to Plans, Part Six, Floor Plans

Number of Occupants:

Other/Special Requirements: Provide concrete curb at lockers. Provide bench(es).

Uniformat Section	Description	Qty	Size	Specific Requirements
C101001	Fixed Partitions	As Indicated	AR	Water Resistant Gypsum board on MTL studs. Partitions shall extend to deck above.
C102001	Standard Interior Doors	As Indicated	3'-0"x7'-0"	Solid core stave wood, natural finish stain (FSC certified wood). Standard metal door frame, welded, and painted
C102007	Interior Door Hardware	AR	AR	Hinges, lockset, closer, stop, finishes-BHMA 626.630
C103001	Compartments, Cubicles, & Toilet Partitions	As indicated	AR	Phenolic core toilet partitions at water closets and urinals
C103002	Toilet Accessories	AR	AR	Aluminum framed mirror; provide one wall mounted soap dispenser at each sink; two wall mounted electric hand dryers per bathroom; one Toilet tissue holder per toilet; Grab bars as required; one surface mounted toilet seat cover dispenser per toilet; one Coat Hook at each stall; one full length mirror per bathroom; two Semi-recessed trash receptacle/paper towel dispensers per bathroom; Finish: Stainless Steel; Compliant with ABA.
C103004	Identifying Devices	AR	AR	Wall-mounted architectural signage. Include room number and name or function
C103005	Lockers	AR	15"x15'x72" high	Lockers ABA compliant – one minimum; single tier; heavy duty plastic
C103008	Counters	AR	AR	Solid acrylic
C103009	Cabinets	AR	AR	Plastic laminate clad apron at sinks. (FSC certified wood).
C301004	Wall Finishes	AR	4-1/4"x4-1/4" x5/16"	Glazed ceramic tile. Toilet: 60" high wainscot; shower: full-height. Epoxy paint above wainscot.
C302001	Tile Floor Finishes	AR	2"x2"x1/4"	Unglazed porcelain tile
C302007	Wall Base Finishes	AR	2"x2"x1/4"	Unglazed porcelain tile, cove

C304007	Ceiling Finishes	AR	AR	Epoxy painted gypsum board
D201001	Water Closets	4	AR	ABA compliant – one minimum; provide manual flush valve, wall hung water closets
D201002	Urinal	6	AR	ABA compliant – one minimum; provide manual flush valve, wall hung water urinal.
D201003	Lavatories	9	AR	ABA compliant – one minimum; under counter mounted, provide manual faucet controls for lavatories.
D201005	Shower	5	3'-0"x3'-0"	ABA compliant – one minimum per room; Terrazzo pan. Transfer style with grab bars and blocking for a bench. No bench to be provided, only blocking for future bench requirement. Shower heads shall be fixed. Thresholds shall be provided to prevent water from flowing from the shower.
D203003	Floor Drain	2	AR	Tamper proof
D502001	Branch Circuit Wiring			Provide 120V, 20A GFI duplex receptacle adjacent to sink (one for every two sinks). Provide 120V, 20A GFI duplex receptacle adjacent to entry door for maintenance. Provide general purpose 120V, 20A GFI duplex receptacle every 25' on-center. Do not install receptacles in shower area. Provide electrical connection for electric hand dryers.
D502002	Lighting Equipment			Target Illuminance: 20 FC ambient; 30 FC vertical at mirror Fixture Type: Recessed 2'x4' troffer with A12.125 acrylic lens, UL listed for wet locations Controls: Manual On/Off switch Provide lighting fixtures with standby battery backup

Elevator (108)

Space Characteristics

Function/adjacencies: Adjacent Lobby

Special Dimensions:
Ideal Plan Dimensions: As indicated on plan
Minimum Ceiling Height: 8”-0”

Acoustics:

Access: Refer to Plans, Part Six, Floor Plans

Number of Occupants:

Other/Special Requirements: Passenger/Service elevator large enough for small freight; commercial office building passenger elevator aesthetic

Uniformat Section	Description	Qty	Size	Specific Requirements
C101001	Fixed Partitions	As Indicated	As Indicated	Impact Resistant Gypsum Board on MTL studs. Partitions shall extend to deck above.
C103004	Identifying Devices	AR	AR	Code required
C301090	Wall Finishes	AR	AR	Laminate per manufacturer’s range
C302001	Tile Floor Finishes	AR	12”x24”x3/8”	Porcelain tile
C3030	Ceiling Finishes	AR	AR	Stainless steel panel(s)
D101002	Passenger/Service Elevator	1	AR	Hydraulic elevator, 4000lb
D502001	Branch Circuit Wiring			Refer to requirements of NAVFAC elevator guide and ASME A17.1
D502002	Lighting Equipment			Provide minimum 4 decorative LED downlights or a perimeter lit ceiling

Electrical (109; 121; 206; 219; 306; 314; 327)

Space Characteristics

Function/adjacencies: House electrical equipment.

Special Dimensions:
Ideal Plan Dimensions: As indicated on plan
Minimum Ceiling Height: N/A

Acoustics: NC 40

Access: Refer to Security Plans, Part Six, Security Plans

Number of Occupants:

Other/Special Requirements:

Uniformat Section	Description	Qty	Size	Specific Requirements
C101001	Fixed Partitions	As Indicated	As Indicated	Impact Resistant Gypsum Board on MTL studs. Partitions shall extend to deck above.
C102001	Standard Interior Doors	As Indicated	3'-0"x7'-0"	Solid core stave wood, natural finish stain (FSC certified wood). Standard metal door frame, welded, and painted
C102007	Interior Door Hardware	AR	AR	Hinges, lockset, stop, finishes-BHMA 626.630
C103004	Identifying Devices	AR	AR	Wall-mounted architectural signage. Include room number and name or function
C304006	Wall Finishes	AR	AR	Painted gypsum board
C302007	Wall Base Finishes	AR	4" High	Rubber
C302010	Floor Finishes	AR	AR	Sealed concrete
C304001	Ceiling Finishes	AR	AR	Paint exposed structure
D502001	Branch Circuit Wiring			Provide 120V, 20A duplex receptacle every 25' on-center
D502002	Lighting Equipment			Target Illuminance: 30 FC Fixture Type: Suspended linear fluorescent industrial luminaire Controls: Manual On/Off switch Provide lighting fixtures with standby battery backup
D503005	Security Systems			Refer to the security drawings appendix included in part six of this RFP for security device locations and to ESRD503005 for description of contractor's responsibilities.

Data (111; 224; 337)

Space Characteristics

Function/adjacencies: House communications equipment.

Special Dimensions:
Ideal Plan Dimensions: As indicated on plans
Minimum Ceiling Height: N/A

Acoustics: STC 45 Walls, NC 40

Access: Refer to Security Plans, Part Six, Security Plans

Number of Occupants:

Other/Special Requirements: Secure Room (Open Storage Area), SECNAV M-5510.36 Department of Navy Information Security Program, Data closet has separate Base G6 & MSTP access

Uniformat Section	Description	Qty	Size	Specific Requirements
C101001	Fixed Partitions	As Indicated	As Indicated	Impact Resistant Gypsum Board on MTL studs. Partitions shall extend to deck above.
C101002	Demountable Partitions	As Indicated	Full height (floor to ceiling)	Wire cage partitions
C102001	Standard Interior Doors	As Indicated	3'-0"x7'-0"	Solid core stave wood, natural finish stain (FSC certified wood). Standard metal door frame, welded, and painted
C102007	Interior Door Hardware	AR	AR	Hinges, lockset, closer, stop, finishes-BHMA 626.630, X-09 on each door.
C103004	Identifying Devices	AR	AR	Wall-mounted architectural signage. Include room number and name or function
C304006	Wall Finishes	AR	AR	Painted gypsum board
C302004	Floor Finishes	AR	24"x24"	Static Dissipative Tile
C302007	Wall Base Finishes	AR	4" High	Rubber
C304001	Ceiling Finishes	AR	AR	No ceiling - exposed to painted structure
D303002	Direct Expansion Systems			Provide a dedicated water cooled computer room air conditioner to serve this space. The unit shall be served by the building condenser water loop. Assume 50 W/sf of heat output from data equipment within the space as a basis of design for proposal. Verify actual heat output with the Government post-award. Provide active space humidity control.
D502001	Branch Circuit Wiring			Provide a minimum of two dedicated un-switched 120V, 20A duplex receptacle power outlets, each on a separate branch circuit, for telecommunications equipment. Provide floor box with 120V, 20A dedicated duplex receptacle for each rack shown on architecture

				floor plans. Increase these minimum requirements as necessary to meet equipment loads. Provide additional 120V, 20A duplex receptacles for maintenance and housekeeping
D502002	Lighting Equipment			Target Illuminance: 50 FC Fixture Type: Suspended linear fluorescent industrial luminaire Controls: Manual On/Off switch Provide lighting fixtures with standby battery backup
D503004	Telecommunications Systems			Equipment racks shown on architectural drawings, plywood backboards, ground bus, 110 blocks
D503004	Television Systems			Refer to the A/V drawings appendix included in part six of this RFP for A/V device locations and to ESRD503004 for description of contractor's responsibilities.
D503005	Security Systems			Refer to the security drawings appendix included in part six of this RFP for security device locations and to ESRD503005 for description of contractor's responsibilities.

Elevator Equipment (112)

Space Characteristics

Function/adjacencies: House elevator equipment. Adjacent to elevator hoist way.

Special Dimensions:
Ideal Plan Dimensions:
Minimum Ceiling Height:

Acoustics: STC 45 Walls, NC 20

Access: Refer to Plans, Part Six, Floor Plans

Number of Occupants:

Other/Special Requirements:

Uniformat Section	Description	Qty	Size	Specific Requirements
C101001	Fixed Partitions	As Indicated	As Indicated	Impact Resistant Gypsum Board on MTL studs. Partitions shall extend to deck above.
C102001	Standard Interior Doors	As Indicated	3'-6" x 7'-0"	Solid core stave wood, natural finish stain (FSC certified wood). Standard metal door frame, welded, and painted
C102007	Interior Door Hardware	AR	AR	Hinges, lockset, closer, stop, finishes-BHMA 626.630
C103004	Identifying Devices	AR	AR	Wall-mounted architectural signage. Include room number and name or function
C103007	Fire Extinguishing Wall-mount	As Indicated	AR	Wall-mounted fire extinguisher
C304006	Wall Finishes	AR	AR	Painted gypsum board
C302007	Wall Base Finishes	AR	4" High	Rubber
C304006	Floor Finishes	AR	AR	Sealed concrete
D502001	Branch Circuit Wiring			Provide electrical design in accordance with the NAVFAC elevator design guide and ASME A17.1. Disconnect for elevator controller shall be the shunt trip circuit breaker type. Provide a minimum of two (2) 120V, 20A general purpose duplex receptacles
D502002	Lighting Equipment			Target Illuminance: 30 FC ambient; 20FC minimum Fixture Type: Suspended linear fluorescent industrial luminaire Controls: Manual On/Off switch Provide lighting fixtures with standby battery backup
D503001	Telecommunications Systems			Provide one (1) voice outlet. Provide communications requirements in accordance with the NAVFAC elevator design guide and ASME A17.1

MCCMOS, Instructor (113)

Space Characteristics

Function/adjacencies: Office/as shown on plans

Special Dimensions:
Ideal Plan Dimensions: As indicated on plans
Minimum Ceiling Height: 9'-0"

Acoustics: STC 55 Walls, NC 30

Access: Refer to Plans, Part Six, Floor Plans

Number of Occupants: 12

Other/Special Requirements:

Uniformat Section	Description	Qty	Size	Specific Requirements
C101001	Fixed Partitions	As Indicated	AR	Impact Resistant Gypsum Board on MTL studs. Partitions shall extend to deck above.
C101007	Interior Glazing	As Indicated	AR	Safety glazing
C102001	Standard Interior Doors	As Indicated	3'-0"x7'-0"	Solid core stave wood, natural finish stain (FSC certified wood). Standard metal door frame w/ glazed side lite (where shown), welded, and painted
C102007	Interior Door Hardware	AR	AR	Hinges, lockset, closer, stop, finishes-BHMA 626.630
C103004	Identifying Devices	AR	AR	Wall-mounted architectural signage. Include room number and name or function
C304006	Wall Finishes	AR	AR	Painted gypsum board
C302005	Carpeting	AR	24"x24"	Provide carpet tile with a minimum of two accents
C302007	Wall Base Finishes	AR	4" High	Rubber
C303001	Acoustical Ceiling Tiles & Panels	AR	24"x24"x5/8"	Acoustical ceiling tile
D502001	Branch Circuit Wiring			Provide 120V, 20A double duplex receptacle at each workstation. Provide 120V, 20A duplex receptacles 10' on-center and a minimum of one per wall
D502002	Lighting Equipment			Target Illuminance: 50 FC Fixture Type: 2' x 4' recessed parabolic fluorescent lighting fixture for ambient lighting with individual task lighting at each workstation Controls: Occupancy sensor. Provide local dimmer with occupancy sensor over-ride for task lighting only at each individual work station
D503001	Telecommunications			Provide one classified outlet and one unclassified

	Systems			outlet at each workstation
E2020	Moveable Furnishings	AR	AR	6’x8’ modular desk workstations, task chairs, bookcases, round table, side chairs, marker board

Classroom (114; 208; 322)

Space Characteristics

Function/adjacencies: Instruction/as shown on plans

Special Dimensions:
Ideal Plan Dimensions: As indicated on plans
Minimum Ceiling Height: 9'-0"

Acoustics: STC 55 Walls, NC 35

Access: Refer to Security Plans, Part Six, Security Plans

Number of Occupants: Varies - Refer to Plans, Part Six, Floor Plans

Other/Special Requirements: Secure Room (Open Storage Area), SECNAV M-5510.36 Department of Navy Information Security Program

C2TECOE, Classroom #208 will receive X-09 on interior main entry, Von Duprin locking device. See sections B203008 and C102001.

Uniformat Section	Description	Qty	Size	Specific Requirements
B202001	Windows	As Indicated	As Indicated	See elevations. Exterior windows shall be ATFP compliant.
B202004	Exterior Glazing	As Indicated	AR	Insulated tinted laminated glazing in compliance with ATFP standards
B203001	Solid Door	As Indicated	3'-0"x8'-0"	Exterior metal door with transom above as indicated on drawings. Comply with ATFP standards.
B203008	Exterior Door Hardware	AR	AR	Hinges, lockset, panic hardware, closer, stop, finishes-BHMA 626.630.
C101001	Fixed Partitions	As Indicated	AR	Impact Resistant Gypsum Board on MTL studs. Partitions shall extend to deck above.
C101003	Retractable Partition	As Indicated	3'-0"x7'-0"	Provide 3'-0" x 7'-0" personnel doors as indicated; STC 50; fabric finish for rooms 114 and 208
C101007	Interior Glazing	As Indicated	AR	Safety glazing
C102001	Standard Interior Doors	As Indicated	3'-0"x7'-0"	Solid core stave wood, natural finish stain (FSC certified wood). Standard metal door frame w/ glazed side lite (where shown), welded, and painted
C102007	Interior Door Hardware	AR	AR	Hinges, lockset, panic hardware, closer, stop, finishes-BHMA 626.630.
C103004	Identifying Devices	AR	AR	Wall-mounted architectural signage. Include room number and name or function
C301006	Wall Finishes	AR	Full Height (floor to ceiling)	Acoustical wall panels to be applied to all exposed wall surfaces

C302005	Carpeting	AR	24”x24”	Provide carpet tile with a minimum of two accents
C302007	Wall Base Finishes	AR	4” High	Rubber
C302011	Raised Access Flooring	AR	24”x24”	18” High - Raised access floor in Rooms 114 and 208
C303001	Acoustical Ceiling Tiles & Panels	AR	24”x24”x5/8”	Acoustical ceiling tile
C304006	Wall Finishes	AR	AR	Painted gypsum board
D502001	Branch Circuit Wiring			Provide 120V, 20A duplex receptacles 10’ on-center and a minimum of one per wall. Provide 120V, 20A double duplex receptacle in floor box for every two students and one at instructor’s podium/workstation. Provide connections to “Smart” training tables. Provide electrical connection to motorized room darkening shades.
D502002	Lighting Equipment			Target Illuminance: 50 FC Fixture Type: Direct/Indirect, pendant-mounted linear fluorescent luminaires with dimming ballasts Controls: Manual dimming with occupancy sensor over-ride
D503001	Telecommunications Systems			Provide one floor box with one classified outlet and one floor box with one unclassified outlet for every two students and one of each at instructor’s podium/workstation. Separate classified floor box from unclassified floor box by a minimum of 12”. Provide connections to “Smart” training tables.
D503004	Television Systems			Refer to the A/V drawings appendix included in part six of this RFP for A/V device locations and to ESRD503004 for description of contractor’s responsibilities.
D503005	Security Systems			Refer to the security drawings appendix included in part six of this RFP for security device locations and to ESRD503005 for description of contractor’s responsibilities.
E201002	Window Treatments	AR	AR	Motorized room darkening shades
E2020	Moveable Furnishings	AR	AR	“Smart” training tables (powered, with ganging/folding/caster/wire management options), swivel chairs, electronic lectern, marker board

MSTP, Security (116)

Space Characteristics

Function/adjacencies: Office/as shown on plans

Special Dimensions:
Ideal Plan Dimensions: As indicate on plans
Minimum Ceiling Height: 8'-0"

Acoustics: STC 45 Walls, NC 30

Access: Refer to Security Plans, Part Six, Security Plans

Number of Occupants: 1

Other/Special Requirements: Secure Room (Open Storage Area), SECNAV M-5510.36 Department of Navy Information Security Program

Uniformat Section	Description	Qty	Size	Specific Requirements
C101001	Fixed Partitions	As Indicated	AR	Impact Resistant Gypsum Board on MTL studs. Partitions shall extend to deck above.
C102001	Standard Interior Doors	As Indicated	3'-0"x7'-0"	Solid core stave wood, natural finish stain (FSC certified wood). Standard metal door frame w/ glazed side lite (where shown), welded, and painted
C102007	Interior Door Hardware	AR	AR	Hinges, lockset, closer, stop, finishes-BHMA 626.630.
C103004	Identifying Devices	AR	AR	Wall-mounted architectural signage. Include room number and name or function
C302005	Carpeting	AR	24"x24"	Carpet tile
C302007	Wall Base Finish	AR	4" high	Rubber
C303001	Acoustical Ceiling Tiles & Panels	AR	24"x24"x5/8"	Acoustical ceiling tile
C304006	Wall Finishes	AR	AR	Painted gypsum board
D502001	Branch Circuit Wiring			Provide 120V, 20A duplex receptacles 10' on-center and a minimum of one per wall Provide 120V, 20A double duplex receptacle at each workstation
D502002	Lighting Equipment			Target Illuminance: 50 FC Fixture Type: 2' x 4' recessed parabolic fluorescent lighting fixture for ambient lighting with individual task lighting at each workstation Controls: Occupancy sensor. Provide local dimmer with occupancy sensor over-ride for task lighting only at each individual work station
D503001	Telecommunications Systems			Provide one classified outlet and one unclassified outlet at each workstation

D503004	Television Systems			Refer to the A/V drawings appendix included in part six of this RFP for A/V device locations and to ESRD503004 for description of contractor's responsibilities.
D503005	Security Systems			Refer to the security drawings appendix included in part six of this RFP for security device locations and to ESRD503005 for description of contractor's responsibilities.
E2020	Moveable Furnishings	AR	AR	6'x8' modular desk, task chair

Storage (115; 117; 118; 118A; 118B; 316)

Space Characteristics

Function/adjacencies: Storage/as shown on plans

Special Dimensions:
Ideal Plan Dimensions: As indicated on plan
Minimum Ceiling Height: No ceiling

Acoustics: STC 45 Walls, NC 30

Access: Refer to Security Plans, Part Six, Security Plans

Number of Occupants:

Other/Special Requirements: Secure Room (Open Storage Area), SECNAV M-5510.36 Department of Navy Information Security Program

MSTP Secured Storage #118A will receive X-09.

MSTP Storage 1 #118 will also receive wire cage partitions. See section C101002.

MSTP PUBS & Admin Storage #118B will receive Von Duprin locking device exterior exit. See section B203008

MCCLL Storage 316 will receive X-09.

Uniformat Section	Description	Qty	Size	Specific Requirements
B203001	Solid Door	As Indicated	3’-0”x8’-0”	Exterior metal doors with raised panel and frame with transom above as indicated on drawings. Comply with ATFP standards
B203008	Exterior Door Hardware	AR	AR	Hinges, lockset, panic hardware, closer, stop, finishes-BHMA 626.630.
C101001	Fixed Partitions	As Indicated	AR	Impact Resistant Gypsum Board on MTL studs. Partitions shall extend to deck above.
C101002	Demountable Partitions	6	Full height (floor to ceiling)	Wire cage partitions w/ 3’-0”x7’-0” lockable doors in 118.
C102001	Standard Interior Doors	As Indicated	3’-0”x7’-0”	Solid core stave wood, natural finish stain (FSC certified wood). Standard metal door frame, welded, and painted
C102005	Interior Overhead Doors	As Indicated	8’-0”x8’-0”	3 button electric power
C102007	Interior Door Hardware	AR	AR	Hinges, lockset, closer, stop, kick plate finishes-BHMA 626.630
C103004	Identifying Devices	AR	AR	Wall-mounted architectural signage. Include room number and name or function
C103006	Shelving	As Indicated	AR	Built-in Shelving, 30” deep in 117.

C304001	Ceiling Finishes	AR	AR	Exposed to painted structure
C304006	Wall Finishes	AR	AR	Painted gypsum board
C302007	Wall Base Finishes	AR	4” High	Rubber
C304006	Floor Finishes	AR	AR	Sealed concrete
D502001	Branch Circuit Wiring			Provide 120V, 20A duplex receptacle every 25’ on-center
D502002	Lighting Equipment			Target Illuminance: 20 FC Controls: Occupancy sensor Fixture Type: Suspended linear fluorescent industrial luminaire
D503004	Television Systems			Refer to the A/V drawings appendix included in part six of this RFP for A/V device locations and to ESRD503004 for description of contractor’s responsibilities.
D503005	Security Systems			Refer to the security drawings appendix included in part six of this RFP for security device locations and to ESRD503005 for description of contractor’s responsibilities.
E2020	Moveable Furnishings			Industrial Shelving, 18” deep in 115 and 118A. Industrial Shelving, 12” deep in 316.

Mechanical (119, 401)

Space Characteristics

Function/adjacencies: House mechanical equipment/as shown on plans

Special Dimensions:
Ideal Plan Dimensions: As indicated on plans
Minimum Ceiling Height: No Ceiling

Acoustics: STC 50 Walls, NC 40

Access: Refer to Plans, Part Six, Floor Plans

Number of Occupants:

Other/Special Requirements:

Uniformat Section	Description	Qty	Size	Specific Requirements
B203001	Solid Door	As Indicated	3'-0"x8'-0"	Exterior metal doors with raised panel and frame with transom above as indicated on drawings. Comply with ATFP standards
B203008	Exterior Door Hardware	AR	AR	Hinges, lockset, closer, stop, finishes-BHMA 626.630
C101001	Fixed Partitions	AR	AR	Concrete Masonry Unit
C102001	Standard Interior Door	As Indicated	3'-0"x7'-0"	Steel door, painted. Standard metal door frame, welded, and painted
C102007	Interior Door Hardware	AR	AR	Hinges, lockset, stop, finishes-BHMA 626.630
C103004	Identifying Devices	AR	AR	Wall-mounted architectural signage. Include room number and name or function
C304001	Ceiling Finishes	AR	AR	Exposed to painted structure
C304003	Wall Finishes	AR	AR	Painted CMU
C302007	Wall Base Finishes	AR	4" High	Rubber
C304006	Floor Finishes	AR	AR	Sealed concrete
D203003	Floor Drain	2	AR	Tamper Proof
D502001	Branch Circuit Wiring			Provide 120V, 20A duplex receptacle within 25' of each piece of mechanical equipment
D502002	Lighting Equipment			Target Illuminance: 30 FC Fixture Type: Suspended linear fluorescent industrial luminaire Controls: Manual On/Off switch Provide lighting fixtures with standby battery backup

D503001	Telecommunications Systems			Provide one unclassified outlet adjacent to each DDC panel

Open Office (120, 325A; 325D)

Space Characteristics

Function/adjacencies: Office/as shown on plans

Special Dimensions:
Ideal Plan Dimensions: As indicated on plans
Minimum Ceiling Height: 9'-0"

Acoustics: STC 45 Walls, NC 35

Access: Refer to Security Plans, Part Six, Security Plans

Number of Occupants: Varies - Refer to Plans, Part Six, Floor Plans

Other/Special Requirements: Secure Room (Open Storage Area), SECNAV M-5510.36 Department of Navy Information Security Program

MSTP, Open Office #120 will also receive X-09. See section C102001.

MSTP, Shared Office #325A will also receive 18" raised access floor, motorized room darkening shades as required

MSTP, M&S Open Office #325D will also receive 18" raised access floor, motorized room darkening shades as required

MSTP, M&S Open Office #325D will house existing safes. Refer to Security Plans, Part Six, Security Plans

Uniformat Section	Description	Qty	Size	Specific Requirements
B202001	Windows	As Indicated	As Indicated	See elevations. Exterior windows shall be ATFP compliant.
B202004	Exterior Glazing	AR	AR	Insulated tinted laminated glazing in compliance with ATFP standards
C101001	Fixed Partitions	As Indicated	AR	Impact Resistant Gypsum Board on MTL studs. Partitions shall extend to deck above.
C102001	Standard Interior Door	As Indicated	3'-0"x7'-0"	Solid core stave wood, natural finish stain (FSC certified wood). Standard metal door frame, welded, and painted
C102007	Interior Door Hardware	AR	AR	Hinges, lockset, closer, stop, finishes-BHMA 626.630
C103004	Identifying Devices	AR	AR	Wall-mounted architectural signage. Include room number and name or function
C103007	Fire Extinguishing Cabinet	As Indicated	AR	Semi-recessed, painted to match walls
C301006	Wall Finishes	AR	AR	Painted gypsum board
C302005	Carpeting	AR	24"x24"	Provide carpet tile with a minimum of two accents
C302007	Wall Base Finishes	AR	4" High	Rubber
C302011	Raised Access Flooring	AR	24"x24"	18" High Raised access floor for rooms

C303001	Acoustical Ceiling Tiles and Panels	AR	24”x24”x5/8”	Acoustical ceiling tile
C304006	Wall Finishes	AR	AR	Painted gypsum board
D502001	Branch Circuit Wiring			Provide 120V, 20A double duplex receptacle at each workstation Provide 120V, 20A receptacle 10’ on-center and a minimum of one per wall
D502002	Lighting Equipment			Target Illuminance: 50 FC Fixture Type: 2’ x 4’ recessed parabolic fluorescent lighting fixture for ambient lighting with individual task lighting at each workstation Controls: Occupancy sensor. Provide local dimmer with occupancy sensor over-ride for task lighting only at each individual work station
D503001	Telecommunications Systems			Provide one classified outlet and one unclassified outlet at each workstation
D503004	Television Systems			Refer to the A/V drawings appendix included in part six of this RFP for A/V device locations and to ESRD503004 for description of contractor’s responsibilities.
D503005	Security Systems			Refer to the security drawings appendix included in part six of this RFP for security device locations and to ESRD503005 for description of contractor’s responsibilities.
E201002	Window Treatments	AR	AR	Horizontal aluminum blinds
E2020	Movable Furnishings	AR	AR	6’x8’ modular desks, task chairs

Loading Area (125)

Space Characteristics

Function/adjacencies: Loading/as shown on plans

Special Dimensions:
Ideal Plan Dimensions: As indicated on plans
Minimum Ceiling Height: N/A

Acoustics: STC 45 Walls, NC 30

Access: Refer to Security Plans, Part Six, Security Plans

Number of Occupants:

Other/Special Requirements:

Uniformat Section	Description	Qty	Size	Specific Requirements
B203001	Solid Door	As Indicated	3'-0"x8'-0"	Exterior metal doors with raised panel and frame. Transom above door as indicated on elevations. Comply with ATFP standards
B203008	Exterior Door Hardware	AR	AR	Hinges, lockset, closer, stop, kick plate finishes; -BHMA 626.630, Von Duprin locking device for exit door with alarm activation
B203004	Overhead Coiling Door	1	8'-0"x8'-0"	Overhead Coiling Door shall be compliant with ATFP standards
C101001	Fixed Partitions	As Indicated	AR	Impact Resistant Gypsum Board on MTL studs. Partitions shall extend to deck above.
C102001	Standard Interior Doors	As Indicated	3'-0"x7'-0"	Solid core stave wood, natural finish stain. Standard metal door frame, welded, and painted
C102007	Interior Door Hardware	AR	AR	Hinges, lockset, closer, stop, kick plate finishes-BHMA 626.630
C103004	Identifying Devices	AR	AR	Wall-mounted architectural signage. Include room number and name or function
C301005	Corner Guards	All Outside Corners	48" High	Stainless Steel
C304001	Ceiling Finishes	AR	AR	Exposed to painted structure
C304006	Wall Finishes	AR	AR	Painted gypsum board
C302007	Wall Base Finishes	AR	4" High	Rubber
C302010	Floor Finishes	AR	AR	Sealed concrete
D502001	Branch Circuit Wiring			Provide 120V, 20A duplex receptacle every 25' on-center

D502002	Lighting Equipment			Target Illuminance: 30 FC Fixture Type: Suspended linear fluorescent industrial luminaire Controls: Occupancy sensor
D503005	Security Systems			Refer to the security drawings appendix included in part six of this RFP for security device locations and to ESRD503005 for description of contractor's responsibilities.

MCCMOS, SIPR (126)

Space Characteristics

Function/adjacencies: as shown on plan

Special Dimensions:
Ideal Plan Dimensions: As indicated on plans
Minimum Ceiling Height: 9'-0"

Acoustics: STC 45 Walls, NC 35

Access: Refer to Security Plans, Part Six, Security Plans

Number of Occupants: 2

Other/Special Requirements: Secure Room (Open Storage Area), SECNAV M-5510.36 Department of Navy Information Security Program

House existing safes. Refer to Security Plans, Part Six, Security Plans

Uniformat Section	Description	Qty	Size	Specific Requirements
C101001	Fixed Partitions	As Indicated	As Indicated	Impact Resistant Gypsum Board on MTL studs. Partitions shall extend to deck above.
C102001	Standard Interior Doors	As Indicated	3'-0"x7'-0"	Solid core stave wood, natural finish stain (FSC certified wood). Standard metal door frame, welded, and painted
C102007	Interior Door Hardware	AR	AR	Hinges, lockset, closer, stop, finishes-BHMA 626.630, X-09
C103004	Identifying Devices	AR	AR	Wall-mounted architectural signage. Include room number and name or function
C302004	Resilient Floor Finishes	AR	24"x24"	Static Dissipative Tile
C302007	Wall Base Finishes	AR	4" High	Rubber
C303001	Acoustical Ceiling Tiles & Panels	AR	24"x24"x5/8"	Acoustical ceiling tile
C304006	Wall Finishes	AR	AR	Painted gypsum board
D502001	Branch Circuit Wiring			Provide 120V, 20A duplex receptacles 10' on-center and a minimum of one per wall Provide 120V, 20A double duplex receptacle at each workstation
D502002	Lighting Equipment			Target Illuminance: 50 FC Fixture Type: 2' x 4' recessed parabolic fluorescent lighting fixture for ambient lighting with individual task lighting at each workstation Controls: Occupancy sensor. Provide local dimmer with occupancy sensor over-ride for task lighting only at each individual work station

D503001	Telecommunications Systems			Provide one classified outlet and one unclassified outlet at each workstation
D503005	Security Systems			Refer to the security drawings appendix included in part six of this RFP for security device locations and to ESRD503005 for description of contractor's responsibilities.
E2020	Movable Furniture	AR	AR	Tables, task chairs

Open Admin (127; 217; 311; 317)

Space Characteristics

Function/adjacencies: Office/as shown on plans

Special Dimensions:
Ideal Plan Dimensions: As indicated on plans
Minimum Ceiling Height: 9'-0"

Acoustics: STC 45 Walls, NC 30

Access: Refer to Security Plans, Part Six, Security Plans

Number of Occupants: Varies - Refer to Plans, Part Six, Floor Plans

Other/Special Requirements: Secure Room (Open Storage Area), SECNAV M-5510.36 Department of Navy Information Security Program

MSTP, Open Admin #217 will house existing safes. Refer to Security Plans, Part Six, Security Plans

MSTP, Open Admin #217 will also receive X-09 on main entrance, Von Duprin locking device. See section C102007.

C2TECOE, Open Admin #311 will also receive X-09 on main entrance, Von Duprin locking device. See section C102007.

MCCLL, 317 will also receive x09 on both entry doors. See section C102007.

Uniformat Section	Description	Qty	Size	Specific Requirements
B202001	Windows	As Indicated	As Indicated	See elevations. Exterior windows shall be ATFP compliant.
B202004	Exterior Glazing	AR	AR	Insulated tinted laminated glazing in compliance with ATFP standards
C101001	Fixed Partitions	As Indicated	AR	Impact Resistant Gypsum Board on MTL studs. Partitions shall extend to deck above.
C101007	Interior Glazing	As Indicated	AR	Safety glazing
C102001	Standard Interior Doors	As Indicated	3'-0"x7'-0"	Solid core stave wood, natural finish stain (FSC certified wood). Metal door frame w/ glazing side lite (where shown), welded, and painted
C102007	Interior Door Hardware	AR	AR	Hinges, panic hardware, lockset, closer, stop, finishes-BHMA 626.630
C103004	Identifying Devices	AR	AR	Wall-mounted architectural signage. Include room number and name or function
C103007	Fire Extinguisher Cabinet	As Indicated	AR	Semi-recessed, painted to match walls
C302005	Carpeting	AR	24"x24"	Provide carpet tile with a minimum of two accents

C302007	Wall Base Finishes	AR	4” High	Rubber
C303001	Acoustical Ceiling Tiles & Panels	AR	24”x24”x5/8”	Acoustical ceiling tile
C304006	Wall Finishes	AR	AR	Painted gypsum board
D201006	Drinking Fountains	As Indicated	AR	H-Lo Electric Drinking Fountain
D502001	Branch Circuit Wiring			Provide 120V, 20A duplex receptacles 10’ on-center and a minimum of one per wall Provide 120V, 20A double duplex receptacle at each workstation Provide 120V, 20A duplex receptacle on a dedicated branch circuit to serve each copier, shredder, plotter, and printer
D502002	Lighting Equipment			Target Illuminance: 50 FC Fixture Type: 2’ x 4’ recessed parabolic fluorescent lighting fixture for ambient lighting with individual task lighting at each workstation Controls: Occupancy sensor. Provide local dimmer with occupancy sensor over-ride for task lighting only at each individual work station
D503001	Telecommunications Systems			Provide one classified outlet and one unclassified outlet at each workstation Provide one classified outlet adjacent to each copier, printer, and plotter
E201002	Window Treatments	AR	AR	Horizontal aluminum blinds
E2020	Moveable Furnishings	AR	AR	6’x8’ modular desking workstations, task chairs, lateral files

Office (127A; 127B; 127C)

Space Characteristics

Function/adjacencies: Office/as shown on plans

Special Dimensions:
Ideal Plan Dimensions: As indicated on plans
Minimum Ceiling Height: 9'-0"

Acoustics: STC 45 Walls, NC 30

Access: Refer to Plans, Part Six, Floor Plans.

Number of Occupants: 1

Other/Special Requirements:

Uniformat Section	Description	Qty	Size	Specific Requirements
B202001	Windows	As Indicated	As Indicated	See elevations. Exterior windows shall be ATFP compliant.
B202004	Exterior Glazing	AR	AR	Insulated tinted laminated glazing in compliance with ATFP standards
C101001	Fixed Partitions	As Indicated	AR	Impact Resistant Gypsum Board on MTL studs. Partitions shall extend to deck above.
C101007	Interior Glazing	As Indicated	AR	Safety glazing
C102001	Standard Interior Doors	As Indicated	3'-0"x7'-0"	Solid core stave wood, natural finish stain (FSC certified wood). Standard metal door frame w/ glazed side lite (where shown), welded, and painted
C102007	Interior Door Hardware	AR	AR	Hinges, lockset, stop, finishes-BHMA 626.630
C103004	Identifying Devices	AR	AR	Wall-mounted architectural signage. Include room number and name or function
C301006	Wall Finishes	AR	Full Height (floor to ceiling)	Acoustical wall panels to be applied to all exposed wall surfaces
C302005	Carpeting	AR	24"x24"	Provide carpet tile with a minimum of two accents
C302007	Wall Base Finishes	AR	4" High	Rubber
C303001	Acoustical Ceiling Tiles & Panels	AR	24"x24"x5/8"	Acoustical ceiling tile
C304006	Wall Finishes	AR	AR	Painted gypsum board
D502001	Branch Circuit Wiring			Provide 120V, 20A duplex receptacles 10' on-center and a minimum of one per wall

				Provide 120V, 20A double duplex receptacle at each workstation
D502002	Lighting Equipment			Target Illuminance: 50 FC Fixture Type: 2' x 4' recessed parabolic fluorescent lighting fixture for ambient lighting with individual task lighting at each workstation Controls: Occupancy sensor. Provide local dimmer with occupancy sensor over-ride for task lighting only at each individual work station
D503001	Telecommunications Systems			Provide one classified outlet and one unclassified outlet at each workstation
D503004	Television Systems			Refer to the A/V drawings appendix included in part six of this RFP for A/V device locations and to ESRD503004 for description of contractor's responsibilities.
D503005	Security Systems			Refer to the security drawings appendix included in part six of this RFP for security device locations and to ESRD503005 for description of contractor's responsibilities.
E201002	Window Treatment	AR	AR	Horizontal aluminum blinds
E2020	Moveable Furnishings	AR	AR	Desk, task chair, guest chair, bookcase, conference table AR

Breakout (128; 215; 216; 332; 333; 334; 335; 336)

Space Characteristics

Function/adjacencies: Office, meeting/as shown on plans

Special Dimensions:
Ideal Plan Dimensions: As indicated on plans
Minimum Ceiling Height: 9'-0"

Acoustics: STC 55 Walls, NC 30

Access: Refer to Security Plans, Part Six, Security Plans

Number of Occupants: Varies - Refer to Plans, Part Six, Floor Plans

Other/Special Requirements: Secure Room (Open Storage Area), SECNAV M-5510.36 Department of Navy Information Security Program

C2TECOE, Breakout #215 & 216 will also receive 18" high raised access floor

MSTP, Breakout #332, 333, 334, 335, 336 will also receive 18" high raised access floor

Uniformat Section	Description	Qty	Size	Specific Requirements
B202001	Windows	As Indicated	As Indicated	See elevations. Exterior windows shall be ATFP compliant.
B202004	Exterior Glazing	AR	AR	Insulated tinted laminated glazing in compliance with ATFP standards
C101001	Fixed Partitions	As Indicated	AR	Impact Resistant Gypsum Board on MTL studs. Partitions shall extend to deck above.
C102001	Standard Interior Doors	As Indicated	3'-0"x7'-0"	Solid core stave wood, natural finish stain (FSC certified wood). Standard metal door frame, welded, and painted.
C102007	Interior Door Hardware	AR	AR	Hinges, lockset, closer, stop, finishes-BHMA 626.630
C103004	Identifying Devices	AR	AR	Wall-mounted architectural signage. Include room number and name or function
C301006	Wall Finishes	AR	Full Height (floor to ceiling)	Acoustical wall panels to be applied to all exposed wall surfaces
C302005	Carpeting	AR	24"x24"	Provide carpet tile with a minimum of two accents
C302007	Wall Base Finishes	AR	4" High	Rubber
C302011	Raised Access Flooring	AR	24"x24"	18" High Raised access floor
C303001	Acoustical Ceiling Tiles & Panels	AR	24"x24"x5/8"	Acoustical ceiling tile
C304006	Wall Finishes	AR	Full Height	Acoustical wall panels to be applied to all exposed wall

			(Floor to Ceiling)	surfaces
D502001	Branch Circuit Wiring			Provide 120V, 20A duplex receptacles 10' on-center and a minimum of one per wall Provide 120V, 20A double duplex receptacle at each workstation
D502002	Lighting Equipment			Target Illuminance: 50 FC Fixture Type: 2' x 4' recessed parabolic fluorescent lighting fixture for ambient lighting with individual task lighting at each workstation Controls: Occupancy sensor. Provide local dimmer with occupancy sensor over-ride for task lighting only at each individual work station
D503001	Telecommunications Systems			Provide one classified outlet and one unclassified outlet at each workstation
D503004	Television Systems			Refer to the A/V drawings appendix included in part six of this RFP for A/V device locations and to ESRD503004 for description of contractor's responsibilities.
D503005	Security Systems			Refer to the security drawings appendix included in part six of this RFP for security device locations and to ESRD503005 for description of contractor's responsibilities.
E201002	Window Treatments	AR	AR	Horizontal aluminum blinds
E2020	Moveable Furnishings	AR	AR	Tables, swivel chairs; conference table or "Smart" training tables (powered with ganging/folding/caster/wire management options) AR, marker board

Break Area (129; 207; 223; 310)

Space Characteristics

Function/adjacencies: kitchenette, lounge, meeting/as shown on plans

Special Dimensions:
Ideal Plan Dimensions: As indicated on plans
Minimum Ceiling Height: 9'-0"

Acoustics: STC 45 Walls, NC 30

Access: Refer to Plans, Part Six, Floor Plans

Number of Occupants: Varies - Refer to Plans, Part Six, Floor Plans

Other/Special Requirements:
MCCMOS, Break Area #129217G will also receive interior windows on each side of the door. All glass will be safety glazing.

Uniformat Section	Description	Qty	Size	Specific Requirements
B202001	Windows	As Indicated	As Indicated	See elevations. Exterior windows shall be ATFP compliant.
B202004	Exterior Glazing	AR	AR	Insulated tinted laminated glazing in compliance with ATFP standards
C101001	Fixed Partitions	As Indicated	AR	Impact Resistant Gypsum Board on MTL studs. Partitions shall extend to deck above.
C101005	Interior Windows	As Indicated	3'-0"x20'-0"	Painted hollow metal frames
C101007	Interior Glazing	AR	AR	Safety glazing
C102001	Standard Interior Doors	As Indicated	3'-0"x7'-0"	Solid core stave wood, natural finish stain (FSC certified wood). Standard metal door frame, welded, and painted
C102007	Interior Door Hardware	AR	AR	Hinges, lockset, closer, stop, finishes-BHMA 626.630
C103004	Identifying Devices	AR	AR	Wall-mounted architectural signage. Include room number and name or function
C103008	Counters	AR	AR	Solid acrylic
C103009	Cabinets	As Indicated	AR	Plastic laminate clad wall and base cabinets. (FSC certified wood).
C304006	Wall Finishes	AR	AR	Painted gypsum board
C302007	Wall Base Finish	AR	4" high	Rubber
C302004	Floor Finishes	AR	6'-0"	Vinyl sheet

C303001	Acoustical Ceiling Tiles & Panels	AR	24”x24”x5/8”	Acoustical ceiling tile
D201004	Sink	As Indicated		Two-compartment sink, provide waste disposer unit.
D502001	Branch Circuit Wiring			Provide 120V, 20A duplex receptacles 8’ on-center and a minimum of one per wall Provide GFI 120V, 20A duplex receptacle, a minimum of two and every 4’ on-center above counter tops
D502002	Lighting Equipment			Target Illuminance: 50 FC Fixture Type: 2’ x 4’ recessed parabolic fluorescent lighting fixture Controls: Occupancy sensor
D503001	Telecommunications Systems			Provide one wall-mounted voice outlet
D503004	Television Systems			Refer to the A/V drawings appendix included in part six of this RFP for A/V device locations and to ESRD503004 for description of contractor’s responsibilities.
D503005	Security Systems			Refer to the security drawings appendix included in part six of this RFP for security device locations and to ESRD503005 for description of contractor’s responsibilities.
E201002	Window Treatments	AR	AR	Horizontal aluminum blinds
E2020	Moveable Furnishings	AR	AR	Round tables, stack chairs, refrigerator, microwave, coffeemaker, lounge chairs, coffee tables

Fire Protection (211)

Space Characteristics

Function/adjacencies: Fire Protection/as shown on plans

Special Dimensions:
Ideal Plan Dimensions: As indicated on plans
Minimum Ceiling Height: N/A

Acoustics: STC 45 Walls, NC 30

Access: Exterior - Refer to Plans, Part Six, Floor Plans.

Number of Occupants:

Other/Special Requirements:

Uniformat Section	Description	Qty	Size	Specific Requirements
B203001	Solid Door	As Indicated	3'-0"x8'-0"	Exterior metal doors with raised panel and frame with transom above as indicated on drawings. Comply with ATFP standards.
B203008	Exterior Door Hardware	AR	AR	Hinges, lockset, closer, stop, finishes-BHMA 626.630, Von Duprin locking device for exit door
C101001	Fixed Partitions	As Indicated	AR	Impact Resistant Gypsum Board on MTL studs. Partitions shall extend to deck above.
C103004	Identifying Devices	AR	AR	Wall-mounted architectural signage. Include room number and name or function
C304006	Wall Finishes	AR	AR	Painted gypsum board
C302007	Wall Base Finishes	AR	4" High	Rubber
C302010	Floor Finishes	AR	AR	Sealed concrete
C304001	Ceiling Finishes	AR	AR	Exposed to painted structure
D203003	Floor Drain	1		Tamper proof.
D502001	Branch Circuit Wiring			Provide 120V, 20A duplex GFI receptacle adjacent to entry door
D502002	Lighting Equipment			Target Illuminance: 30 FC Fixture Type: Suspended linear fluorescent industrial luminaire Controls: Manual On/Off switch
D503005	Security Systems			Refer to the security drawings appendix included in part six of this RFP for security device locations and to ESRD503005 for description of contractor's responsibilities.

Electrical (212)

Space Characteristics

Function/adjacencies: House electrical equipment/as shown on plans

Special Dimensions:
Ideal Plan Dimensions: As indicated on plan
Minimum Ceiling Height: N/A

Acoustics: NC 40

Access: corridor - Refer to Plans, Part Six, Floor Plans.

Number of Occupants:

Other/Special Requirements:

Uniformat Section	Description	Qty	Size	Specific Requirements
B203001	Solid Door	As Indicated	3'-0"x8'-0"	Exterior metal doors with raised panel and frame. Transom above door as indicated on elevations. Exterior door shall be ATFP compliant.
B203008	Exterior Door Hardware	AR	AR	Hinges, lockset, closer, stop, finishes-BHMA 626.630, Von Duprin locking device for exit door
C101001	Fixed Partitions	As Indicated	AR	Impact Resistant Gypsum Board on MTL studs. Partitions shall extend to deck above.
C103004	Identifying Devices	AR	AR	Wall-mounted architectural signage. Include room number and name or function
C304006	Wall Finishes	AR	AR	Painted gypsum board
C302007	Wall Base Finishes	AR	4" High	Rubber
C302010	Floor Finishes	AR	AR	Sealed concrete
C304001	Ceiling Finishes	AR	AR	Exposed to painted structure
D502001	Branch Circuit Wiring			Provide 120V, 20A duplex receptacle every 25' on-center
D502002	Lighting Equipment			Target Illuminance: 30 FC Fixture Type: Suspended linear fluorescent industrial luminaire Controls: Manual On/Off switch Provide lighting fixtures with standby battery backup
D503005	Security Systems			Refer to the security drawings appendix included in part six of this RFP for security device locations and to ESRD503005 for description of contractor's responsibilities.

C2 TECOE, IT NET Storage (213)

Space Characteristics

Function/adjacencies: Storage/as shown on plans

Special Dimensions:
Ideal Plan Dimensions: As indicated on plan
Minimum Ceiling Height: N/A

Acoustics: STC 45 Walls, NC 30

Access: Refer to Security Plans, Part Six, Security Plans.

Number of Occupants:

Other/Special Requirements: Secure Room (Open Storage Area), SECNAV M-5510.36 Department of Navy Information Security Program

Uniformat Section	Description	Qty	Size	Specific Requirements
B202001	Windows	As Indicated	As Indicated	See elevations. Exterior windows shall be ATFP compliant.
B202004	Exterior Glazing	AR	AR	Insulated tinted laminated glazing in compliance with ATFP standards
B203001	Solid Door	As Indicated	3'-0"x8'-0"	Exterior metal doors with raised panel and frame with transom above as indicated on drawings. Comply with ATFP standards.
B203008	Exterior Door Hardware	AR	AR	Hinges, lockset, closer, stop, finishes-BHMA 626.630, Von Duprin locking device with alarm activation on exterior door
C101001	Fixed Partitions	As Indicated	AR	Impact Resistant Gypsum Board on MTL studs. Partitions shall extend to deck above.
C102001	Standard Interior Doors	As Indicated	3'-0"x7'-0"	Solid core stave wood, natural finish stain (FSC certified wood). Standard metal door frame, welded, and painted
C102007	Interior Door Hardware	AR	AR	Hinges, lockset, closer, stop, finishes-BHMA 626.630, X-09
C103004	Identifying Devices	AR	AR	Wall-mounted architectural signage. Include room number and name or function.
C304006	Wall Finishes	AR	AR	Painted gypsum board
C30	Floor Finishes	AR	12"x12"x1/8"	Static dissipative tile
C302007	Wall Base Finish	AR	4" high	Rubber
C302011	Raised Access Flooring	AR	24"x24"	18" High - Raised access floor
C304001	Ceiling Finish	AR	AR	Exposed to painted structure

D502001	Branch Circuit Wiring			Provide 120V, 20A duplex receptacle every 25' on-center
D502002	Lighting Equipment			Target Illuminance: 20 FC Controls: Occupancy sensor Fixture Type: Suspended linear fluorescent industrial luminaire
D503005	Security Systems			Refer to the security drawings appendix included in part six of this RFP for security device locations and to ESRD503005 for description of contractor's responsibilities.
E201002	Window Treatments	2	AR	Horizontal aluminum blinds
E2020	Moveable Furnishings	AR	AR	Industrial shelving, 24" deep

C2 TECOE, C2LC (214)

Space Characteristics

Function/adjacencies: Instruction/as shown on plans

Special Dimensions:
Ideal Plan Dimensions: As indicated on plans
Minimum Ceiling Height: 9'-0"

Acoustics: STC 45 Walls, NC 30

Access: Refer to Security Plans, Part Six, Security Plans

Number of Occupants: 31

Other/Special Requirements: Secure Room (Open Storage Area), SECNAV M-5510.36 Department of Navy Information Security Program

House existing safes. Refer to Security Plans, Part Six, Security Plans

Uniformat Section	Description	Qty	Size	Specific Requirements
C101001	Fixed Partitions	As Indicated	AR	Impact Resistant Gypsum Board on MTL studs. Partitions shall extend to deck above.
C102001	Standard Interior Doors	As Indicated	3'-0"x7'-0"	Solid core stave wood, natural finish stain (FSC certified wood). Standard metal door frame, welded, and painted
C102007	Interior Door Hardware	AR	AR	Hinges, lockset, closer, stop, finishes-BHMA 626.630, X-09 on main entryway, Von Duprin locking device for interior exit door
C103004	Identifying Devices	AR	AR	Wall-mounted architectural signage. Include room number and name or function
C304006	Wall Finishes	AR	AR	Painted gypsum board
C302005	Carpeting	AR	24"x24"	Provide carpet tile with a minimum of two accents
C302007	Wall Base Finishes	AR	4" High	Rubber
C302011	Raised Access Flooring	AR	24"x24"	18" High Raised access floor
C303001	Acoustical Ceiling Tiles & Panels	AR	24"x24"x5/8"	Acoustical ceiling tile
D502001	Branch Circuit Wiring			Provide 120V, 20A duplex receptacles 10' on-center and a minimum of one per wall. Provide 120V, 20A double duplex receptacle in floor box for every two students and one at instructor's podium/workstation Provide connections to "Smart" training tables
D502002	Lighting Equipment			Target Illuminance: 50 FC Fixture Type: Direct/Indirect, pendant-mounted linear

				fluorescent luminaires with dimming ballasts Controls: Manual dimming with occupancy sensor over-ride
D503001	Telecommunications Systems			Provide one floor box with one classified outlet and one floor box with one unclassified outlet for every two students and one of each at instructor's podium/workstation. Separate classified floor box from unclassified floor box by a minimum of 12" Provide connections to "Smart" training tables
D503004	Television Systems			Refer to the A/V drawings appendix included in part six of this RFP for A/V device locations and to ESRD503004 for description of contractor's responsibilities.
E2020	Moveable Furnishings	AR	AR	"Smart" training tables (powered, with ganging/folding/caster/wire management options), swivel chairs, electronic lecterns; marker board

Office – Secure Room (217A; 217B; 217C; 217D; 217E; 217F; 217G; 217H, 217J; 217K; 217L; 217M; 311A; 311B; 311C; 311D; 311E; 311F; 311G; 311H; 311J; 317A; 317B; 317C; 317D; 317E; 317F; 317G; 317H; 317J; 317K; 317L; 325C; 329)

Space Characteristics

Function/adjacencies: Office/as shown on plans

Special Dimensions:
Ideal Plan Dimensions: As indicated on plans
Minimum Ceiling Height: 9'-0"

Acoustics: STC 45 Walls, NC 30

Access: Refer to Security Plans, Part Six, Security Plans

Number of Occupants: Varies - Refer to Plans, Part Six, Floor Plans.

Other/Special Requirements: Secure Room (Open Storage Area), SECNAV M-5510.36 Department of Navy Information Security Program
MSTP, Shared Office #217G will also receive interior windows on each side of the door. All glass will be safety glazing.

MSTP, #325C will receive 18" raised access floor, motorized room darkening shades as required.

Uniformat Section	Description	Qty	Size	Specific Requirements
B202001	Windows	As Indicated	As Indicated	See elevations. Exterior windows shall be ATFP compliant.
B202004	Exterior Glazing	AR	AR	Insulated tinted laminated glazing in compliance with ATFP standards
C101001	Fixed Partitions	As Indicated	AR	Impact Resistant Gypsum Board on MTL studs. Partitions shall extend to deck above.
C101005	Interior Windows	As Indicated	3'-0"x3'-0"	Painted hollow metal frames
C101007	Interior Glazing	As Indicated	AR	Safety glazing
C102001	Standard Interior Doors	As Indicated	3'-0"x7'-0"	Solid core stave wood, natural finish stain (FSC certified wood). Metal door frame w/ glazing side lite (where shown), welded, and painted
C102007	Interior Door Hardware	AR	AR	Hinges, lockset, stop, finishes-BHMA 626.630
C103004	Identifying Devices	AR	AR	Wall-mounted architectural signage. Include room number and name or function
C304006	Wall Finishes	AR	AR	Painted gypsum board. Provide acoustical panels in Director and Deputy Director offices 217E and 217F, all walls, full height.
C302005	Carpeting	AR	24"x24"	Provide carpet tile with a minimum of two accents
C302007	Wall Base Finishes	AR	4" High	Rubber

C302011	Raised Access Flooring	AR	24”x24”	18” High Raised access floor
C303001	Acoustical Ceiling Tiles & Panels	AR	24”x24”x5/8”	Acoustical ceiling tile
D502001	Branch Circuit Wiring			Provide 120V, 20A duplex receptacles 10’ on-center and a minimum of one per wall Provide 120V, 20A double duplex receptacle at each workstation
D502002	Lighting Equipment			Target Illuminance: 50 FC Fixture Type: 2’ x 4’ recessed parabolic fluorescent lighting fixture for ambient lighting with individual task lighting at each workstation Controls: Occupancy sensor. Provide local dimmer with occupancy sensor over-ride for task lighting only at each individual work station
D503001	Telecommunications Systems			Provide one classified outlet and one unclassified outlet at each workstation
D503004	Television Systems			Refer to the A/V drawings appendix included in part six of this RFP for A/V device locations and to ESRD503004 for description of contractor’s responsibilities.
D503005	Security Systems			Refer to the security drawings appendix included in part six of this RFP for security device locations and to ESRD503005 for description of contractor’s responsibilities.
E201002	Window Treatment	AR	AR	Horizontal aluminum blinds
E2020	Moveable Furnishings	AR	AR	Desk, task chair, guest chairs, bookcase, conference table AR

Conference (222; 309; 313; 318; 330)

Space Characteristics

Function/adjacencies: Meetings/as shown on plans

Special Dimensions:
Ideal Plan Dimensions: As indicated on plans
Minimum Ceiling Height: 9'-0"

Acoustics: STC 55 Walls, NC 35

Access: Refer to Security Plans, Part Six, Security Plans

Number of Occupants: Varies - Refer to Plans, Part Six, Floor Plans

Other/Special Requirements: Secure Room (Open Storage Area), SECNAV M-5510.36 Department of Navy Information Security Program

Shared Conference #318 will also receive X-09 on main entry, Von Duprin locking device for exit door. See section C102007.

Uniformat Section	Description	Qty	Size	Specific Requirements
B202001	Windows	As Indicated	As Indicated	See elevations. Exterior aluminum frames ATFP compliant.
B202004	Exterior Glazing	AR	AR	Insulated tinted laminated glazing in compliance with ATFP standards
C101001	Fixed Partitions	As Indicated	AR	Impact Resistant Gypsum Board on MTL studs. Partitions shall extend to deck above.
C101007	Interior Glazing	As Indicated	AR	Safety glazing
C102001	Standard Interior Doors	As Indicated	3'-0"x7'-0"	Solid core stave wood, natural finish stain (FSC certified wood). Standard metal door frame w/ glazed side lite (where shown), welded, and painted
C102007	Interior Door Hardware	AR	AR	Hinges, lockset, closer, stop, finishes-BHMA 626.630
C103004	Identifying Devices	AR	AR	Wall-mounted architectural signage. Include room number and name or function. Vacant/Occupied slider panel.
C301006	Wall Finishes	AR	Full Height (floor to ceiling)	Acoustical wall panels to be applied to all exposed wall surfaces
C304006	Wall Finishes	AR	Full Height (Floor to Ceiling)	Acoustical wall panels to be applied to all exposed wall surfaces
C302005	Carpeting	AR	24"x24"	Provide carpet tile with a minimum of two accents
C302007	Wall Base Finishes	AR	4" High	Rubber
C303001	Acoustical Ceiling Tiles & Panels	AR	24"x24"x5/8	Acoustical ceiling tile

D502001	Branch Circuit Wiring			Provide 120V, 20A duplex receptacles 10' on-center and a minimum of one per wall Provide 120V, 20A duplex receptacle mounted in flush floor box below conference table Provide connection for motorized room darkening shades
D502002	Lighting Equipment			Target Illuminance: 50 FC Fixture Type: Direct/Indirect, pendant-mounted linear fluorescent luminaires and either recessed downlight/wall washers or recessed linear wall washers with dimming ballasts around perimeter Controls: Provide multi-scene dimming control. Switch front row, overhead, and perimeter lighting separately
D503001	Telecommunications Systems			Provide one floor box with one classified outlet and one floor box with one unclassified outlet located below conference table Provide one classified outlet and one unclassified outlet on every wall every 10' on-center
D503004	Television Systems			Refer to the A/V drawings appendix included in part six of this RFP for A/V device locations and to ESRD503004 for description of contractor's responsibilities.
D503005	Security Systems			Refer to the security drawings appendix included in part six of this RFP for security device locations and to ESRD503005 for description of contractor's responsibilities.
E201002	Window Treatments	AR	AR	Motorized room darkening shades
E2020	Moveable Furnishings	AR	AR	Conference table, swivel chairs, side chairs AR, credenza AR, marker board

C2 TECOE, COC Training Pad (225)

Space Characteristics

Function/adjacencies: Instruction/as shown on plans

Special Dimensions:
Ideal Plan Dimensions: 50' x 40'
Minimum Ceiling Height: N/A

Acoustics: N/A

Access: Refer to Plans, Part Six, Floor Plans.

Number of Occupants:

Other/Special Requirements:

Uniformat Section	Description	Qty	Size	Specific Requirements
B201012	Screen Walls	As Indicated	10'-0" high	Brick & Precast walls where shown on drawings.
D502001	Branch Circuit Wiring			Provide marine grade pedestal with power and data connections. Power connection shall be 60A, 4-wire208V with watertight safety shroud twist lock. Confirm requirements with user.
D503001	Telecommunications Systems			Data connection shall be collocated with power in pedestal and shall consist of four data outlets. Confirm network connections with user.
G204001	Fencing & Gates	As Indicated	10'-0" high	Ornamental fence with gates where shown on drawings.

MSTP, Command Center (323)

Space Characteristics

Function/adjacencies: Instruction/as shown on plans

Special Dimensions:
Ideal Plan Dimensions: As indicated on plans
Minimum Ceiling Height: 9'-0"

Acoustics: STC 55 Walls, NC 35

Access: Refer to Security Plans, Part Six, Security Plans

Number of Occupants: 134

Other/Special Requirements: Secure Room (Open Storage Area), SECNAV M-5510.36 Department of Navy Information Security Program

House existing safes. Refer to Security Plans, Part Six, Security Plans

Uniformat Section	Description	Qty	Size	Specific Requirements
B202001	Windows	As Indicated	As Indicated	See elevations. Exterior windows shall be ATFP compliant.
B202004	Exterior Glazing	AR	AR	Insulated tinted laminated glazing in compliance with ATFP standards
C101001	Fixed Partitions	As Indicated	AR	Impact Resistant Gypsum Board on MTL studs. Partitions shall extend to deck above.
C101003	Retractable Partition	As Indicated	AR	Provide 3'-0"x 7'-0" personnel doors as indicated, STC 50, fabric finish
C101007	Interior Glazing	As Indicated	AR	Safety glazing
C102001	Standard Interior Doors	As Indicated	3'-0"x7'-0"	Solid core stave wood, natural finish stain (FSC certified wood). Metal door frame w/ glazing side lite (where shown), welded, and painted
C102007	Interior Door Hardware	AR	AR	Hinges, panic hardware, lockset, closer, stop, finishes-BHMA 626.630
C103004	Identifying Devices	AR	AR	Wall-mounted architectural signage. Include room number and name or function
C3010	Wall Finishes	AR	Full Height (Floor to Ceiling)	Acoustical wall panels to be applied to all exposed wall surfaces
C302005	Carpeting	AR	24"x24"	Provide carpet tile with a minimum of two accents
C302007	Wall Base Finishes	AR	4" High	Rubber
C302011	Raised Access Flooring	AR	24"x24"	18" High Raised access floor

C303001	Acoustical Ceiling Tiles & Panels	AR	24”x24”x5/8”	Acoustical ceiling tile
D502001	Branch Circuit Wiring			Provide 120V, 20A duplex receptacles 10’ on-center and a minimum of one per wall. Provide 120V, 20A double duplex receptacle in floor box for every two students and one at instructor’s podium/workstation Provide electrical connections for motorized blackout shades Provide connection to “Smart” training tables
D502002	Lighting Equipment			Target Illuminance: 50 FC Fixture Type: Direct/Indirect, pendant-mounted linear fluorescent luminaires with dimming ballasts Controls: Manual dimming with occupancy sensor over-ride
D503001	Telecommunications Systems			Provide one floor box with one classified outlet and one floor box with one unclassified outlet for every two students and one of each at instructor’s podium/workstation. Separate classified floor box from unclassified floor box by a minimum of 12” Provide connection to “Smart” training tables
D503004	Television Systems			Refer to the A/V drawings appendix included in part six of this RFP for A/V device locations and to ESRD503004 for description of contractor’s responsibilities.
D503005	Security Systems			Refer to the security drawings appendix included in part six of this RFP for security device locations and to ESRD503005 for description of contractor’s responsibilities.
E201002	Window Treatments	AR	AR	Motorized blackout shades
E2020	Moveable Furnishings	AR	AR	“Smart” training tables (powered, with ganging/folding/caster/wire management options), swivel chairs, electronic lecterns, marker board

MSTP, Flex Space (307)

Space Characteristics

Function/adjacencies: Office/as shown on plans

Special Dimensions:
Ideal Plan Dimensions: As indicated on plans
Minimum Ceiling Height: 9'-0"

Acoustics: STC 45 Walls, NC 30

Access: Refer to Plans, Part Six, Floor Plans

Number of Occupants: 6

Other/Special Requirements:

Uniformat Section	Description	Qty	Size	Specific Requirements
B202001	Windows	As Indicated	As Indicated	See elevations. Exterior windows shall be ATFP compliant.
B202004	Exterior Glazing	AR	AR	Insulated tinted laminated glazing in compliance with ATFP standards
C101001	Fixed Partitions	As Indicated	AR	Impact Resistant Gypsum Board on MTL studs. Partitions shall extend to deck above.
C101007	Interior Glazing	As Indicated	AR	Safety glazing
C102001	Standard Interior Doors	As Indicated	3'-0"x7'-0"	Solid core stave wood, natural finish stain (FSC certified wood). Standard metal door frame w/ glazed side lite (where shown), welded, and painted
C102007	Interior Door Hardware	AR	AR	Hinges, lockset, closer, stop, finishes-BHMA 626.630
C103004	Identifying Devices	AR	AR	Wall-mounted architectural signage. Include room number and name or function
C3010	Wall Finishes	AR	Full Height (Floor to Ceiling)	Acoustical wall panels to be applied to all exposed wall surfaces
C302005	Carpeting	AR	24"x24"	Provide carpet tile with a minimum of two accents
C302007	Wall Base Finishes	AR	4" High	Rubber
C303001	Acoustical Ceiling Tiles & Panels	AR	24"x24"x5/8"	Acoustical ceiling tile
D502001	Branch Circuit Wiring			Provide 120V, 20A duplex receptacles 10' on-center and a minimum of one per wall Provide 120V, 20A double duplex receptacle at each workstation Provide connections to "Smart" training tables

D502002	Lighting Equipment			Target Illuminance: 50 FC Fixture Type: 2' x 4' recessed parabolic fluorescent lighting fixture for ambient lighting with individual task lighting at each workstation Controls: Occupancy sensor. Provide local dimmer with occupancy sensor over-ride for task lighting only at each individual work station
D503001	Telecommunications Systems			Provide one classified outlet and one unclassified outlet at each workstation Provide connections to "Smart" training tables
D503004	Television Systems			Refer to the A/V drawings appendix included in part six of this RFP for A/V device locations and to ESRD503004 for description of contractor's responsibilities.
E201002	Window Treatment	AR	AR	Room darkening shades
E2020	Moveable Furnishings	AR	AR	"Smart" training tables (powered, with ganging/folding/caster/wire management options), swivel chairs, marker board

MSTP, EVTC (308)

Space Characteristics

Function/adjacencies: Meetings/as shown on plans

Special Dimensions:
Ideal Plan Dimensions: As indicated on plans
Minimum Ceiling Height: 9'-0"

Acoustics: STC 55 Walls, NC 30

Access: Refer to Security Plans, Part Six, Security Plans

Number of Occupants: 7

Other/Special Requirements: Secure Room (Open Storage Area), SECNAV M-5510.36 Department of Navy Information Security Program

Uniformat Section	Description	Qty	Size	Specific Requirements
B202001	Windows	As Indicated	As Indicated	See elevations. Exterior windows shall be ATFP compliant.
B202004	Exterior Glazing	AR	AR	Insulated tinted laminated glazing in compliance with ATFP standards
C101001	Fixed Partitions	As Indicated	AR	Impact Resistant Gypsum Board on MTL studs. Partitions shall extend to deck above.
C101007	Interior Glazing	As Indicated	AR	Safety glazing
C102001	Standard Interior Doors	As Indicated	3'-0"x7'-0"	Solid core stave wood, natural finish stain (FSC certified wood). Standard metal door frame w/ glazed side lite (where shown), welded, and painted
C102007	Interior Door Hardware	AR	AR	Hinges, lockset, closer, stop, finishes-BHMA 626.630, X-09
C103004	Identifying Devices	AR	AR	Wall-mounted architectural signage. Include room number and name or function. Vacant/occupied slider panel.
C3010	Wall Finishes	AR	Full Height (Floor to Ceiling)	Acoustical wall panels to be applied to all exposed wall surfaces
C302005	Carpeting	AR	24"x24"	Provide carpet tile with a minimum of two accents
C302007	Wall Base Finishes	AR	4" High	Rubber
C303001	Acoustical Ceiling Tiles & Panels	AR	24"x24"x5/8"	Acoustical ceiling tile

D502001	Branch Circuit Wiring			Provide 120V, 20A duplex receptacles 10' on-center and a minimum of one per wall Provide 120V, 20A duplex receptacle mounted in flush floor box below conference table
D502002	Lighting Equipment			Target Illuminance: The amount of light falling on the face of the occupant measured vertically should be 50-75 FC. The wall where the screen or monitor is located should have as little illumination as possible. No reflected glare should appear on the screen or monitor to inhibit viewing. Provide lighting for the back wall and to a lesser extent, the side walls to balance the brightness with the rest of the room. Light levels ratios from the participant to the back wall should be within 3 to 1 while the side walls can be 5 to 1. The light on occupant's faces should come from an angle between 45° and 60° vertical. Horizontally, light should also be cast on the face from an angle in addition to front to assure that minimum shadows are created in the eye sockets and under the nose and chin. Provide fluorescent lamps of 3000° K or 3500° K (Color Temperature) with a CRI (Color Rendering Index) of 82+. Generally the wall finishes and furniture should be very neutral. The reflectance value of these colors and surfaces shall be between 30-40%.¶Fixture type: 2' x 2' recessed indirect video/tele conference fixtures. Provide a secondary lighting scheme with recessed dimmable compact fluorescent downlights with regressed black baffle. Switch front row separately. The target illuminance for this secondary lighting scheme shall be 30FC, independent of the primary lighting scheme. Control: Provide multi-scene dimming control. Switch front row, VTC, and perimeter lighting separately
D503001	Telecommunications Systems			Provide one floor box with one classified outlet and one floor box with one unclassified outlet located below conference table Provide one classified outlet and one unclassified outlet every 10' on-center
D503004	Television Systems			Refer to the A/V drawings appendix included in part six of this RFP for A/V device locations and to ESRD503004 for description of contractor's responsibilities.
D503005	Security Systems			Refer to the security drawings appendix included in part six of this RFP for security device locations and to ESRD503005 for description of contractor's responsibilities.
E201002	Window Treatment	AR	AR	Room darkening shades
E2020	Moveable Furnishings	AR	AR	Conference table, swivel chairs, credenzas, marker board

Shared Control Room (320)

Space Characteristics

Function/adjacencies: Server room/as shown on plans

Special Dimensions:
Ideal Plan Dimensions: As indicated on plans
Minimum Ceiling Height: 9'-0"

Acoustics: STC 45, NC 35

Access: Refer to Security Plans, Part Six, Security Plans

Number of Occupants: 4

Other/Special Requirements: Secure Room (Open Storage Area), SECNAV M-5510.36 Department of Navy Information Security Program

Uniformat Section	Description	Qty	Size	Specific Requirements
B202001	Windows	As Indicated	As Indicated	See elevations. Exterior windows ATFP compliant.
B202004	Exterior Glazing	AR	AR	Insulated tinted laminated glazing in compliance with ATFP standards
C101001	Fixed Partitions	As Indicated	AR	Impact Resistant Gypsum Board on MTL studs. Partitions shall extend to deck above.
C102001	Standard Interior Doors	As Indicated	3'-0"x7'-0"	Solid core stave wood, natural finish stain (FSC certified wood). Standard metal door frame, welded, and painted
C102007	Interior Door Hardware	AR	AR	Hinges, lockset, closer, stop, finishes-BHMA 626.630, X-09
C103004	Identifying Devices	AR	AR	Wall-mounted architectural signage. Include room number and name or function
C3010	Wall Finishes	AR	AR	Painted gypsum board
C302004	Resilient Floor Finishes	AR	12"x12"	Static Dissipative Tile
C302007	Wall Base Finishes	AR	4" High	Rubber
C303001	Acoustical Ceiling Tiles & Panels	AR	24"x24"x5/8"	Acoustical ceiling tile
D303002	Direct Expansion Systems			Provide dedicated, water cooled computer room air conditioner to serve this space. The unit shall be served by the building condenser water loop. Assume 100 W/sf of heat output from data equipment within the space as a basis of design for proposal (in addition to other cooling loads from people, lighting, etc.). Verify actual heat output with the Government post-award. Provide active space humidity control.

D502001	Branch Circuit Wiring			Provide a minimum of four (4) 120V, 20A general purpose duplex receptacles Provide 120V, 20A double duplex receptacle every 3' on a dedicated circuit at control console Provide floor box with 20A, 120V dedicated duplex receptacle for each equipment rack shown on architectural floor plans
D502002	Lighting Equipment			Target illuminance: 50 FC. Fixture type: Recessed linear fluorescent fixtures designed specifically for VDTs (e.g. Parabolic) and aimable lighting with dimming ballasts. Controls: Provide step-level dimming or inboard/outboard lamp switching for the linear fixtures and dimmers for the aimable lights. Provide occupancy sensor override. Provide master controls adjacent to door and local controls at control console. Provide lighting fixtures with standby battery backup
D503001	Telecommunications Systems			Provide data connections for equipment, plus a minimum of four (4) classified outlets and four (4) unclassified outlets. Cable tray.
D503004	Television Systems			Refer to the A/V drawings appendix included in part six of this RFP for A/V device locations and to ESRD503004 for description of contractor's responsibilities.
D503005	Security Systems			Refer to the security drawings appendix included in part six of this RFP for security device locations and to ESRD503005 for description of contractor's responsibilities.
E201002	Window Treatments	AR	AR	Room darkening shades
E2020	Moveable Furnishings	AR	AR	Workbenches, stools, marker board

MSTP, War Room (321)

Space Characteristics

Function/adjacencies: Instruction/as shown on plans

Special Dimensions:
Ideal Plan Dimensions: As indicated on plans
Minimum Ceiling Height: 9'-0"

Acoustics: STC 55 Walls, NC 35

Access: Refer to Security Plans, Part Six, Security Plans

Number of Occupants: 51

Other/Special Requirements: Secure Room (Open Storage Area), SECNAV M-5510.36 Department of Navy Information Security Program

House existing safes. Refer to Security Plans, Part Six, Security Plans

Uniformat Section	Description	Qty	Size	Specific Requirements
C101001	Fixed Partitions	As Indicated	As Indicated	Impact Resistant Gypsum Board on MTL studs. Partitions shall extend to deck above.
C102001	Standard Interior Doors	As Indicated	3'-0"x7'-0"	Solid core stave wood, natural finish stain (FSC certified wood). Standard metal door frame, welded, and painted; no side light at entry door.
C102007	Interior Door Hardware	AR	AR	Hinges, panic hardware, lockset, closer, stop, finishes-BHMA 626.630.
C103004	Identifying Devices	AR	AR	Wall-mounted architectural signage. Include room number and name or function. Vacant/Occupied slider panel.
C103008	Counters	AR	AR	Premium solid acrylic or quartz w/ full height back splash
C103009	Cabinets	AR	AR	Hardwood veneer base and wall cabinets. (FSC certified wood). Provide fixed, powered seating and tables in War Room #321. Tables should be hardwood veneer, panel base, full height modesty panels, with solid acrylic work surfaces and hardwood edges. Power and data at work surface height. Finishes and quality should be upgraded. Provide layout as shown on drawings. Round, horseshoe shaped table must remain round, horseshoe shaped to accommodate a minimum of 11 seats. Table segments must have flush edges to the next table for seamless appearance.
C3010	Wall Finishes	AR	Full Height (Floor to Ceiling)	Acoustical wall panels to be applied to all exposed wall surfaces

C302005	Carpeting	AR	24”x24”	Provide carpet tile with a minimum of two accents
C302007	Wall Base Finishes	AR	4” High	Rubber
C302011	Raised Access Flooring	AR	24”x24”	Tiered access floor as indicated on drawings
C303001	Acoustical Ceiling Tiles & Panels	AR	24”x24”x5/8”	Acoustical ceiling tile
D201004	Sink	1	AR	One-compartment sink under counter mounted
D303002	Direct Expansion Systems			Assume 5 W/sf of heat output from electrical equipment within the space as a basis of design for proposal (in addition to other cooling loads from people, lighting, etc.). Verify actual equipment loads with the Government post-award. The intent is for the War Room (321) to be served by a water source heat pump.
D502001	Branch Circuit Wiring			Provide 120V, 20A duplex receptacles 10’ on-center and a minimum of one per wall. Provide 120V, 20A double duplex receptacle in floor box for every two students and one at instructor’s podium/workstation
D502002	Lighting Equipment			Target Illuminance: The amount of light falling on the face of the occupant measured vertically should be 50-75 FC. The wall where the screen or monitor is located should have as little illumination as possible. No reflected glare should appear on the screen or monitor to inhibit viewing. Provide lighting for the back wall and to a lesser extent, the side walls to balance the brightness with the rest of the room. Light levels ratios from the participant to the back wall should be within 3 to 1 while the side walls can be 5 to 1. The light on occupant’s faces should come from an angle between 45° and 60° vertical. Horizontally, light should also be cast on the face from an angle in addition to front to assure that minimum shadows are created in the eye sockets and under the nose and chin. Provide fluorescent lamps of 3000° K or 3500° K (Color Temperature) with a CRI (Color Rendering Index) of 82+. Generally the wall finishes and furniture should be very neutral. The reflectance value of these colors and surfaces shall be between 30-40%.¶Fixture type: 2’ x 2’ recessed indirect video/tele conference fixtures. Provide a secondary lighting scheme with recessed dimmable compact fluorescent downlights with regressed black baffle. Switch front row separately. The target illuminance for this secondary lighting scheme shall be 30FC, independent of the primary lighting scheme. Control: Provide multi-scene dimming control. Switch front row, VTC, and perimeter lighting separately
D503001	Telecommunications Systems			Provide one floor box with one classified outlet and one floor box with one unclassified outlet for every two students and one of each at instructor’s podium/workstation. Separate classified floor box from unclassified floor box by a minimum of 12”
D503004	Television Systems			Refer to the A/V drawings appendix included in part six of this RFP for A/V device locations and to ESRD503004 for description of contractor’s

				responsibilities.
D503005	Security Systems			Refer to the security drawings appendix included in part six of this RFP for security device locations and to ESRD503005 for description of contractor's responsibilities.
E2020	Moveable Furnishings	AR	AR	electronic lectern, marker board, side seating

MSTP, Modeling & Simulation (325)

Space Characteristics

Function/adjacencies: Instruction/as shown on plans

Special Dimensions:
Ideal Plan Dimensions: As indicated on plans
Minimum Ceiling Height: 9'-0"

Acoustics: STC 55 Walls, NC 35

Access: Refer to Security Plans, Part Six, Security Plans

Number of Occupants: 84

Other/Special Requirements: Secure Room (Open Storage Area), SECNAV M-5510.36 Department of Navy Information Security Program

Uniformat Section	Description	Qty	Size	Specific Requirements
B202001	Windows	As Indicated	As Indicated	See elevations. Exterior windows shall be ATFP compliant.
B202004	Exterior Glazing	AR	AR	Insulated tinted laminated glazing in compliance with ATFP standards
C101001	Fixed Partitions	As Indicated	AR	Impact Resistant Gypsum Board on MTL studs. Partitions shall extend to deck above.
C102001	Standard Interior Doors	As Indicated	3'-0"x7'-0"	Solid core stave wood, natural finish stain (FSC certified wood). Standard metal door frame, welded, and painted
C102007	Interior Door Hardware	AR	AR	Hinges, panic hardware, lockset, closer, stop, finishes-BHMA 626.630, Von Duprin locking device on exit door
C103004	Identifying Devices	AR	AR	Wall-mounted architectural signage. Include room number and name or function
C103007	Fire Extinguishing Cabinet	As Indicated	AR	Semi-recessed, prefinished white
C3010	Wall Finishes	AR	AR	Painted gypsum board; acoustical wall panels
C302005	Carpeting	AR	24"x24"	Provide carpet tile with a minimum of two accents
C302007	Wall Base Finishes	AR	4" High	Rubber
C302011	Raised Access Flooring	AR	24"x24"	18" High Raised access floor
C303001	Acoustical Ceiling Tiles & Panels	AR	24"x24"x5/8"	Acoustical ceiling tile
D502001	Branch Circuit Wiring			Provide 120V, 20A duplex receptacles 10' on-center and a minimum of one per wall. Provide 120V, 20A double duplex receptacle in floor box for every two

				students and one at instructor's podium/workstation Provide 120V, 20A duplex receptacle on a dedicated branch circuit to serve each copier, shredder, plotter, and printer
D502002	Lighting Equipment			Target Illuminance: 50 FC Fixture Type: 2' x 4' recessed parabolic fluorescent lighting fixture Controls: Occupancy sensor
D503001	Telecommunications Systems			Provide one floor box with one classified outlet and one floor box with one unclassified outlet for every two students and one of each at instructor's podium/workstation. Separate classified floor box from unclassified floor box by a minimum of 12"
D503004	Television Systems			Refer to the A/V drawings appendix included in part six of this RFP for A/V device locations and to ESRD503004 for description of contractor's responsibilities.
D503005	Security Systems			Refer to the security drawings appendix included in part six of this RFP for security device locations and to ESRD503005 for description of contractor's responsibilities.
E201002	Window Treatments	AR	AR	Motorized room darkening shades
E2020	Movable Furnishings	AR	AR	"Smart" computer tables (powered , with ganging/folding/caster/ wire management options), task chairs, marker board

MSTP, M&S Server (325B)

Space Characteristics

Function/adjacencies: Server Room/as shown on plans

Special Dimensions:
Ideal Plan Dimensions: As indicated on plan
Minimum Ceiling Height: N/A

Acoustics: NC 40

Access: Refer to Security Plans, Part Six, Security Plans

Number of Occupants:

Other/Special Requirements: Secure Room (Open Storage Area), SECNAV M-5510.36 Department of Navy Information Security Program

Uniformat Section	Description	Qty	Size	Specific Requirements
C101001	Fixed Partitions	As Indicated	AR	Impact Resistant Gypsum Board on MTL studs. Partitions shall extend to deck above.
C102001	Standard Interior Doors	As Indicated	3'-0"x7'-0"	Solid core stave wood, natural finish stain (FSC certified wood). Standard metal door frame, welded, and painted
C102007	Interior Door Hardware	AR	AR	Hinges, lockset, closer, stop, finishes-BHMA 626.630
C103004	Identifying Devices	AR	AR	Wall-mounted architectural signage. Include room number and name or function
C3010	Wall Finishes	AR	AR	Painted gypsum board
C302004	Resilient Floor Finishes	AR	24"x24"	Static Dissipative Tile
C302007	Wall Base Finishes	AR	4" High	Rubber
C303001	Acoustical Ceiling Tiles & Panels	AR	AR	Exposed to painted structure
D303002	Direct Expansion Systems			Provide a dedicated water cooled computer room air conditioner to serve this space. The unit shall be served by the building condenser water loop. Assume 50 W/sf of heat output from data equipment within the space as a basis of design for proposal. Verify actual heat output with the Government post-award. Provide active space humidity control.
D502001	Branch Circuit Wiring			Provide a minimum of two dedicated un-switched 120V, 20A duplex receptacle power outlets, each on a separate branch circuit, for telecommunications equipment. Increase these minimum requirements as necessary to meet equipment loads. Provide additional 120V, 20A duplex receptacles for maintenance and housekeeping

D502002	Lighting Equipment			Target Illuminance: 50 FC Fixture Type: Suspended linear fluorescent industrial luminaire Controls: Manual On/Off switch Provide lighting fixtures with standby battery backup
D503001	Telecommunications Systems			Provide two classified and two unclassified outlets
D503005	Security Systems			Refer to the security drawings appendix included in part six of this RFP for security device locations and to ESRD503005 for description of contractor's responsibilities.

MSTP, C2 Lab (331)

Space Characteristics

Function/adjacencies: Instruction/as shown on plans

Special Dimensions:
Ideal Plan Dimensions: As indicated on plans
Minimum Ceiling Height: 9'-0"

Acoustics: STC 55 walls, NC 30

Access: Refer to Security Plans, Part Six, Security Plans

Number of Occupants: 5

Other/Special Requirements: Secure Room (Open Storage Area), SECNAV M-5510.36 Department of Navy Information Security Program

Uniformat Section	Description	Qty	Size	Specific Requirements
B202001	Windows	As Indicated	As Indicated	See elevations. Exterior windows shall be ATFP compliant.
B202004	Exterior Glazing	AR	AR	Insulated tinted laminated glazing in compliance with ATFP standards
C101001	Fixed Partitions	As Indicated	AR	Impact Resistant Gypsum Board on MTL studs. Partitions shall extend to deck above.
C102001	Standard Interior Doors	As Indicated	3'-0"x7'-0"	Solid core stave wood, natural finish stain (FSC certified wood). Standard metal door frame, welded, and painted
C102007	Interior Door Hardware	AR	AR	Hinges, lockset, closer, stop, finishes-BHMA 626.630
C103004	Identifying Devices	AR	AR	Wall-mounted architectural signage. Include room number and name or function
C3010	Wall Finishes	AR	AR	Painted gypsum board
C302005	Carpeting	AR	24"x24"	Provide carpet tile with a minimum of two accents
C302007	Wall Base Finishes	AR	4" High	Rubber
C302011	Raised Access Flooring	AR	24"x24"	18" High Raised access floor
C303001	Acoustical Ceiling Tiles & Panels	AR	24"x24"x5/8"	Acoustical ceiling tile
D502001	Branch Circuit Wiring			Provide 120V, 20A duplex receptacles 10' on-center and a minimum of one per wall Provide 120V, 20A double duplex receptacle at each workstation
D502002	Lighting Equipment			Target Illuminance: 50 FC

				Fixture Type: 2' x 4' recessed parabolic fluorescent lighting fixture for ambient lighting with individual task lighting at each workstation Controls: Occupancy sensor. Provide local dimmer with occupancy sensor over-ride for task lighting only at each individual work station
D503001	Telecommunications Systems			Provide one classified outlet and one unclassified outlet at each workstation
D503004	Television Systems			Refer to the A/V drawings appendix included in part six of this RFP for A/V device locations and to ESRD503004 for description of contractor's responsibilities.
D503005	Security Systems			Refer to the security drawings appendix included in part six of this RFP for security device locations and to ESRD503005 for description of contractor's responsibilities.
E201002	Window Treatments	AR	AR	Horizontal aluminum blinds
E2020	Moveable Furnishings	AR	AR	Tables, swivel chairs

6.0 ENGINEERING SYSTEM REQUIREMENTS

THIS PAGE HAS BEEN INTENTIONALLY LEFT BLANK

6. ENGINEERING SYSTEMS REQUIREMENTS

A10 FOUNDATIONS

SYSTEM DESCRIPTION

Provide the building foundation system in accordance with UFC 3-301-01, *Structural Engineering*. Foundation shall be designed to suit subsurface conditions, and shall be capable of transmitting all building loads to the ground. All foundation and earthwork shall be performed as indicated in Part 3 – Chapter 3 Section 3.2 “Site Development Requirements.” This site contains a cohesive subgrade that is susceptible to weakening and may require soil modification. Soils shall be modified and stabilized as indicated previously. Refer to Part 3 - Chapter 3 for soil modification requirements. Soils at the foundation bearing elevation must be inspected and approved by a representative of the geotechnical engineer. Unsatisfactory soils shall be removed and replaced in accordance with UFGS Specification Section 31 23 00.00 20, Excavation and Fill.

See Section B10, *Superstructure*, for loading criteria.

A10 GENERAL

GEOTECHNICAL INFORMATION

Subsurface soil information, including a preliminary geotechnical report are included in other portions of this RFP.

Any included subsurface information is only for the Contractor's information and is not guaranteed to fully represent all subsurface conditions. The Government shall not be responsible for any interpretation or conclusion by the Contractor drawn from the data or information.

Any geotechnical report accompanying the subsurface information is provided only to better convey data (boring logs, testing, etc.) or to document observed site conditions. The assumptions, analysis, and recommendations of any accompanying report were developed for preliminary planning purposes only and may not reflect present project requirements. The Contractor is required to retain a Geotechnical Engineer experienced and licensed in the geographic region of the project to interpret the provided information as related to his design concept and develop geotechnical requirements to support design and construction.

Variations in subsurface conditions between borings should be anticipated. The Contractor shall bear all costs associated with the site preparation, ground improvement and foundations except as allowed by Contract Clause FAR 52.236-2, "Differing Site Conditions". The Contractor's Geotechnical Engineer shall perform additional subsurface investigation/testing as required to adequately determine all applicable geotechnical factors including the type and capacity of the project foundations. The Contractor’s Geotechnical Engineer shall recommend a single foundation type. Two or more foundation types supporting a single building are not allowed. The Contractor's Geotechnical Engineer shall consider the provided information and any additional information obtained and prepare a report as described in other portions of this RFP. The minimum requirements for the subsurface investigation and report are as required by UFC 1-300-09N with associated references.

As a minimum, the successful bidder's Geotechnical Engineer shall perform five borings to depths of 80 feet, and supplementary laboratory classification of soils encountered on the building site to support the foundation design and/or subsequent pile driving analysis.

Personnel under the supervision of a registered Professional Engineer shall provide inspection of excavations and soil/groundwater conditions throughout construction. The Engineer shall be responsible for performing pre-construction and periodic site visits throughout construction to assess site conditions. The Engineer, with the concurrence of the Contractor and the Contracting Officer, shall update the excavation, sheeting, shoring, and dewatering plans as construction progresses to reflect actual site conditions and shall submit the updated plan and a written report (with professional stamp) at least monthly informing the Contractor and Contracting Officer of the status of the plan and an accounting of Contractor adherence to the plan; specifically addressing any present or potential problems. The Engineer shall be available to meet with the Contracting Officer at any time throughout the contract duration. The Contractor shall bear all costs of the Engineer.

SEISMIC DESIGN

A site-specific seismic ground motion study is not required.

The design shall use a seismic site classification D.

A1010 STANDARD FOUNDATIONS

As determined by the Designer of Record to be applicable, provide a Standard foundation. "Standard Foundations" are shallow or deep foundations as specifically addressed in IBC Chapter 18. Do not use masonry unit footings, steel grillage footings, timber footings, or wood foundations.

A1020 SPECIAL FOUNDATIONS

As determined by the Designer of Record to be applicable, provide a Special foundation. "Special Foundations" are any foundations that are not specifically "Standard Foundations", or a site improvement/ground modification system. Examples of site improvement/ground modification systems include surcharging, stone columns, rammed aggregate piers, impact densification, compaction grouting, vibroflotation, etc. As "Special Foundation" techniques or systems typically require the use of specialty contractors, a Professional Engineer shall establish installation and acceptance criteria and supervise the installation. The Designer of Record shall submit justification for use, including acceptable evidence of previous successful installation in similar conditions, methods and equipment used in their installation, proposed testing and inspection to be used, supporting test data, calculations, and any other information related to the structural properties and load capacity of such system. The allowable stresses for piles/piers shall not exceed those limitations specified in UFC 1-200-01. Do not use timber piles.

Perform load tests as recommended by the Contractor's Geotechnical Engineer. Perform pile integrity tests on 10% of the auger cast piles.

Conduct construction operation so as to cause the least interference with the existing adjacent facilities. Interferences shall include, but are not limited to, noise, vibration, and obstruction. All work shall be performed to prevent damage to the existing facilities.

A1030 SLAB ON GRADE

As determined by the Designer of Record to be applicable, provide a standard concrete slab on grade. Where slab on grade is below the existing adjacent exterior grade, provide water/ dampproofing and a perimeter drainage system to remove ground water from the area immediately adjacent to the buildings. Provide perimeter insulation. The designer of record shall include design measures to mitigate radon build-up beneath the slab on grade in accordance with other sections of the RFP.

A1040 STRUCTURALLY SUPPORTED SLAB

As determined by the Designer of Record to be applicable, provide a structurally supported slab. Provide for support of all utilities that may be adversely affected by soil consolidation or expansive soils. Provide stainless steel supports sized adequately to support the in-service utility. Where the structurally supported slab is below the existing adjacent exterior grade, provide water/dampproofing and a perimeter drainage system to remove ground water from the area immediately adjacent to the buildings. Provide perimeter insulation.

--End of Section--

THIS PAGE HAS BEEN INTENTIONALLY LEFT BLANK

6. ENGINEERING SYSTEMS REQUIREMENTS

A20 BASEMENT CONSTRUCTION

SYSTEM DESCRIPTION

Provide the basement construction in accordance with UFC 3-301-01, *Structural Engineering*.

A2010 BASEMENT EXCAVATION

Not applicable.

A2020 BASEMENT WALLS

Basement walls include exterior walls below the ground floor level of the building, including walls that are below grade, elevator pits and other pits. Provide basement walls constructed of cast-in-place concrete. Provide waterproofing and insulation of basement walls.

--End of Section--

THIS PAGE HAS BEEN INTENTIONALLY LEFT BLANK

6. ENGINEERING SYSTEMS REQUIREMENTS

B10 SUPERSTRUCTURE

SYSTEM DESCRIPTION

Provide the building framing system in accordance with UFC 3-301-01, *Structural Engineering*.

In addition, design the structure in accordance with the following loading criteria:

Additional Loads

Vaults: See Security Plans in Part 6 for locations of vaults and weights.

Extraordinary Events

Design the structure to withstand the effects of the following extraordinary (i.e. low probability event): ATFP requirements per UFC 4-010-01 and progressive collapse prevention per UFC 4-023-03.

B1010 FLOOR CONSTRUCTION

The floor construction may include any structural framing system meeting the requirements of this section excluding a pre-engineered metal building system, wood deck on wood framing, wood deck on light-gage metal framing, and wood deck on engineered-wood framing. The floor deck shall be supported on concrete masonry walls, steel columns and steel beams, steel columns and joist girders or concrete columns and concrete beams.

B1020 ROOF CONSTRUCTION

The roof construction may include any structural framing system meeting the requirements of this section excluding a pre-engineered metal building system, wood deck on wood framing, wood deck on cold-formed metal framing or wood deck on engineered-wood framing. The roof construction shall be supported on cast-in-place concrete walls, concrete masonry walls, steel columns and steel beams, steel columns and joist girders, or concrete columns and concrete beams.

B1030 SPECIAL CONSTRUCTION

The structural system needs to be compatible with the intended functions and components of the interior space. Preserve open space requirements by limiting columns in interior spaces such as classrooms and labs. Framing shall support retractable partitions where applicable. Limit deflections of supporting framing to partition manufacturer's recommendations.

--End of Section--

THIS PAGE HAS BEEN INTENTIONALLY LEFT BLANK

6. ENGINEERING SYSTEMS REQUIREMENTS

B20 EXTERIOR ENCLOSURE

SYSTEM DESCRIPTION

This system consists of the exterior shell of the facility, which includes all vertical and horizontal exterior closure such as exterior walls, exterior windows, and exterior doors. This system excludes roofing (See System B30, *Roofing*). Load bearing exterior walls will be included here, and not in System B10, *Superstructure*. Structural frame elements at exterior such as columns, beams, and spandrels are included in Superstructure, with only the applied exterior finishes (e.g., paint, stucco) being included here. Finishes to the inside face of walls which are not an integral part of the wall construction will be included in System C30, *Interior finishes*.

GENERAL SYSTEMS REQUIREMENTS

B2010 EXTERIOR WALLS

The primary exterior material of the building shall be brick masonry, cast-in-place concrete, precast concrete and manufactured faced panels to match existing adjacent structures on the base.

A precast concrete water table shall be provided to match existing adjacent structures on the base and shown and noted on building elevations.

Brick masonry details shall be consistent with the existing base buildings and details shown and noted on the building elevations .

B201001 EXTERIOR CLOSURE

Provide brick veneer exterior wall closure.

B201002 EXTERIOR WALL BACKUP CONSTRUCTION

Provide Exterior Wall Construction System (back-up systems for wall veneer) including cast-in-place concrete or unit masonry wall systems with insulation.

B201003 INSULATION and VAPOR RETARDER

Insulation will be provided to meet the Energy Standards.

Provide a continuous air barrier to control air leakage into, or out of, conditioned spaces. The building envelope shall including all elements of the facility that are exposed to the outside environment or outside environmental conditions such as roof, walls, floors, and compartmentalized unconditioned portions of the facility such as garages, and negatively pressurized spaces. Permanently seal penetrations through the air barrier, joints in the air barrier, adjoining construction, and transitions to different air barrier materials. Confirm air barrier compliance with air barrier performance tests in RFP Part 4.

B201004 PARAPETS

Provide parapets for exterior wall construction, where required for low-slope roofs.

B201005 EXTERIOR LOUVERS & SCREENS

Provide exterior louvers and screens, where required, that match the finish of the existing windows and are detailed to integrate with the architecture of the building.

B201006 HANDRAILS

Provide complete non-corrosive metal railing systems including anchors and attachment sleeves and fasteners.

B201007 EXTERIOR SOFFITS

Provide exterior soffit system metal, vinyl painted exterior grade gypsum board.

B201009 EXTERIOR PAINTING AND COATINGS

Provide field applied exterior coatings for all items that are not prefinished, and to prefinished items when required to provide a color other than a standard prefinished color.

B201010 EXTERIOR JOINT SEALANTS

Provide exterior application of joint sealants to seal joints and prepare for finish material installation.

B201011 SUN CONTROL DEVICES (EXTERIOR)

Not Applicable.

B201012 SCREEN WALL

Provide screen walls where required to screen mechanical units, electrical substations, loading docks, trash receptacles and shown on drawings. Screen walls shall be compatible with the building architecture and as shown on building elevations.

B2020 EXTERIOR WINDOWS

As much as practical, windows shall be provided in each area of the building that is regularly occupied, to enhance the working environment, without compromising visual acuity and comfort. Natural day lighting is preferred, except at at locations shown on plans. Exterior windows shall be prefinished aluminum. Windows shall meet the Antiterrorism Force Protection (AT/FP) requirements within UFC 4-010-01.

If approved by the DOR, the sample window may be installed in an opening in a framed wall, and the mock-up may be left during construction as a cut-away of the installation. For masonry walls, the sample window shall be installed in the masonry sample panel.

B202001 WINDOWS

Determine the construction of security windows by evaluating the project program security requirements, using the Mil Hdbk 1013/1A, *Design Guidance for Physical Security of Facilities*, to define window requirements.

Windows shall be aluminum fixed. Provide a mockup of one combination window unit for the project to be used for a field mockup test of compliance with AAMA 502 Method A and Method B

Windows shall meet the Antiterrorism Force Protection (AT/FP) requirements within UFC 4-010-01.

B202002 STOREFRONTS

Storefronts shall be aluminum.

Storefronts shall meet the Antiterrorism Force Protection (AT/FP) requirements within UFC 4-010-01.

B202003 CURTAIN WALLS

A curtain wall is a reinforced window wall that spans more than one story in height.

Provide a multi-story glazed curtain wall system.

System shall be a standard architectural type Unit and Mullion system, with mullions, horizontal rails, and or non-integral spandrel panels. Fully coordinate system accessories directly incorporated and adjacent to contiguous related work and insure materials compatibility, deflection limitations, thermal movements, and clearances and tolerances.

System shall be a combination of glazed panels and opaque panels.

Provide a mockup of one 1 designated Curtain Wall System unit for the project to be used for a field test of compliance with AAMA 503 Method A and Method B

Curtain Walls shall meet the Antiterrorism Force Protection (AT/FP) requirements within UFC 4-010-01.

B202004 EXTERIOR GLAZING

Glazing shall be clear insulating laminated and spandrel glass compliant with UFC 4-010-01.

Exterior glazing shall meet the Antiterrorism Forced Protection (AT/FP) requirements within UFC 4-010-01.

B202090 OTHER EXTERIOR WINDOWS

Not Applicable.

B2030 EXTERIOR DOORS

Provide solid door assemblies other than at the main entrance. Exterior doors and frames shall be non-corroding finished steel.

Doors shall be Heavy Duty Doors - ANSI/SDI A250.8, Level 2, physical performance Level B, Model 2.

Glazing shall match the window glazing.

Exterior doors shall meet the Antiterrorism Forced Protection (AT/FP) requirements within UFC 4-010-01.

B203001 SOLID DOORS

Provide solid steel door assemblies other than at main storefront/window wall entrances including painted heavy-duty, non-corroding, insulated doors with frames and hardware. Also provide louvers and accessories and wall opening elements such as lintels, sills and flashings.

Solid doors shall meet the Antiterrorism Forced Protection (AT/FP) requirements within UFC 4-010-01.

B203002 GLAZED DOORS

Glazed Doors - Provide Exterior Glazed Doors and Entrances System including factory-finish aluminum framed door assemblies with insulated, glazing, frames, and hardware compatible with other buildings on the base and wall opening elements such as lintels, sills, through-wall flashings, and joint sealers.

Glazed doors shall meet the Antiterrorism Forced Protection (AT/FP) requirements within UFC 4-010-01.

B203004 OVERHEAD COILING DOORS

Doors for loading area shall be coiling type. Doors shall be operated by hand chain with gear or sprocket reduction and by three-button electric power conforming to NEMA MG 1, NEMA ICS 1, NEMA ICS 2, and NEMA ICS 6 with auxiliary hand chain operation.

Overhead coiling doors shall meet the Antiterrorism Forced Protection (AT/FP) requirements within UFC 4-010-01.

B203006 BLAST RESISTANT DOORS

Provide special doors used for blast resistance where required by UFC 4-010-01.

B203008 EXTERIOR DOOR HARDWARE

Provide the services of a certified door hardware consultant to prepare the door hardware schedule.

Provide hardware keying compatible with the existing base wide keying system. Replacement interchangeable cores shall be compatible with the Best Lock system.

For specialized entries provide: LKM7000 exit device, Von Duprin, access control key card reader, balance magnetic switch (BMS), maximum security panic hardware (automatic relocking with local alarm) and closer(s). LKM7000 security features shall meet standards of FF-L-2890.

Provide the services of a certified door hardware consultant to prepare the door hardware schedule.

Door hardware finish shall be chrome-plated brass or bronze, or stainless steel.

Refer to Part Three, Room Requirements and Part Six, Security Plans. All secures door hardware to comply with the Secure Room (Open Storage Area) requirement of the SECNAV M-5510.36 Department of Navy Information Security Program.

B203090 OTHER EXTERIOR SPECIALTY DOORS

Provide automatic swinging entrance doors at the main entrance to the building.

--End of Section--

THIS PAGE HAS BEEN INTENTIONALLY LEFT BLANK

6. ENGINEERING SYSTEMS REQUIREMENTS

B30 ROOFING

B30 GENERAL SYSTEM DESCRIPTION

Roof systems shall be watertight and compatible with facility function, construction, and service conditions. Provide complete roof system design and construction services for the entire new facility roof system, including all ancillary and incidental work necessary for a complete, new, watertight roof system installation.

Submittal Requirements: Components of a minimum roof submittal shall include the roof plan, method of drainage, standard details and details unique to the project, wind load calculations and requirements.

Provide a Pre-Design Roofing Conference (if required in RFP Part 4) and Pre-Roofing Conference to assure roof design and construction is properly coordinated before construction begins.

Built-in gutter systems where drainage passes through an interior space or is concealed in the exterior cavity wall shall be prohibited.

Refer to UFC 3-110-03, *Roofing*, and UFC 3-101-01, *Architecture*, for additional roofing requirements.

B3010 ROOF COVERINGS

B301001 STEEP SLOPE ROOFING SYSTEMS

Steep slope roofing systems are preferred over low slope roofing systems, where practical. Steep slope roofing systems that are acceptable include standing seam metal. The roof system shall be designed and attached to resist wind uplift pressures calculated in accordance with ASCE 7. Uplift resistance shall be validated by applicable Factory Mutual (FM), Underwriters Laboratories (UL) or ASTM uplift resistance test procedures. Steel panels shall be zinc-coated steel conforming to ASTM A 653/A 653M; aluminum-zinc alloy coated steel conforming to ASTM A 792/A 792M, AZ 55 coating; or aluminum-coated steel.

Sub-purlins for the Structural Metal Roof System shall be galvanized.

SSSMRS Warranty Certificate. At the completion of the project the Contractor shall furnish signed copies of the 5-year Warranty for Structural Standing Seam Metal Roof (SSSMR) System, a sample copy of which is attached to the PTS section, and the 20-year Manufacturer's Material Warranties, and the manufacturer's 20-year system weather-tightness warranty.

B301002 LOW SLOPE ROOFING SYSTEMS

Wind Uplift - The complete roof covering assembly shall be rated Class 1- 90 or appropriate in accordance with FM P7825, capable of withstanding an uplift pressure of 90 pounds per square foot (including the safety factor of 2), and FM I-49 for perimeter and flashing attachment.

A three ply modified system consisting of modified base sheet, modified bitumen interply sheet, and modified bitumen cap sheet is the system of choice for new low sloped roofing.

Use a ventilating base sheet over any materials which may contain moisture which may need to transpire out of the building.

Low slope roofing systems that are acceptable include three-ply built-up roofing systems with modified bitumen cap sheet surfacing or three-ply modified bitumen roofing.

Provide polyester reinforced cap sheet on Modified Bitumen roofs expected to experience high levels of traffic, on roofs with congested equipment, where equipment is expected to receive regular service or high maintenance, and where other service conditions warrant.

Cool Roof - Meet the ASHRAE 90.1 Chapter 5 values for cool roofing. If a cool roof is not selected in zones 1-3, meet one of the exception requirements listed in ASHRAE 90.1 Chapter 5 or provide thermal insulation above the deck with an R-Value of 33 or greater.

B301003 ROOF INSULATION AND FILL

For fastening roof insulation on low-slope membrane roofs, fasteners shall be place to withstand and obtain an uplift pressure of 90pounds per square foot (including the safety factor of 2) in the field of the roof and FM LPDS 1-49 for perimeter component and flashing attachment.

B301004 FLASHINGS AND TRIM

Flashing and sheet metal work shall include scuppers, splash pans, and sheet metal roofing. Aluminum Alloy Sheet and Plate - ASTM B 209 Pre-Finished Aluminum. Finish shall be baked-on factory applied color coating of polyvinylidene fluoride (PVF2) or other equivalent fluorocarbon coating with a minimum thickness of 0.8 to 1.3 mils.

B301005 GUTTERS AND DOWNSPOUTS

Provide gutters and downspouts compatible with roofing material and finish.

B301006 ROOF OPENINGS AND SUPPORTS

Provide insulated roof hatch and rails or guards as required.

B301090 OTHER ROOFING

Provide lightning protection, without penetrating the roof membrane or flashing components

--End of Section--

6. ENGINEERING SYSTEMS REQUIREMENTS

C10 INTERIOR CONSTRUCTION

SYSTEM DESCRIPTION

Interior construction includes interior partitions, interior doors, and fittings.

Provide durable construction appropriate for the building function. Acoustic properties of materials, as well as durability, shall be considered during material selection.

GENERAL SYSTEM REQUIREMENTS

Areas of the Project subject to abuse require that "impact Resistant" systems be provided. See "Room Requirements" for specific requirements on "Partitions", "Interior Doors", and "Fittings".

C1010 PARTITIONS

All interior partitions shall be either concrete masonry or metal studs with gypsum board each side

C101001 FIXED PARTITIONS

Provide fixed interior partitions, except where demountable or retractable partitions are specifically required by the "Room Requirements." Sound-rated partition assemblies shall have a minimum Sound Transmission Coefficient (STC) of 42 in accordance with ASTM E 90 or ASTM E 413 for frequency data. Provide blocking for all wall mounted items, to include, but not limited to: marker boards and tack boards, display cases, and A/V equipment.

C101002 DEMOUNTABLE PARTITIONS

Demountable partitions include full height (floor to ceiling) wire mesh partitions. Extend wire mesh partitions meant for security purposes to the structural ceiling, or provide a wire mesh ceiling. Coordinate finishes with Section C30 Interior Finishes.

C101003 RETRACTABLE PARTITIONS

Provide retractable partitions to include operable panel doors. Sound-rated partition assemblies shall have a minimum Sound Transmission Coefficient (STC) of 50 in accordance with ASTM E 90 or ASTM E 413 for frequency data. Coordinate finishes with Section C30 Interior Finishes.

C101004 INTERIOR GUARDRAILS AND SCREENS

Provide balustrades where required by code. Provide screens where required to prohibit view of a particular area.

C101005 INTERIOR WINDOWS

Provide interior windows of aluminum or hollow metal, fixed.

C101006 GLAZED PARTITIONS & STOREFRONTS

Provide glazed storefront system.

C101007 INTERIOR GLAZING

Interior glazing shall be clear glass, wire glass, laminated glass, tempered glass.

C1020 INTERIOR DOORS

C102001 STANDARD INTERIOR DOORS

All interior doors shall be flush.

All interior doors shall be solid wood or hollow metal in hollow metal frames.

Flush wood doors shall be WDMA I.S.1A-04, custom grade, heavy duty.

C102002 GLAZED INTERIOR DOORS

Provide vision glazing in doors where it is required by the “Room Requirements” portion of this RFP, or it is deemed advantageous to be able to see through the door, either for safety of pedestrian traffic, or other functional reason.

C102003 FIRE DOORS

Provide interior fire doors.

C102004 SLIDING AND FOLDING DOORS

Not Applicable.

C102005 INTERIOR OVERHEAD DOORS

Provide interior overhead doors.

C102006 INTERIOR GATES

Not Applicable.

C102007 INTERIOR DOOR HARDWARE

For specialized entries provide: LKM7000 exit device, Von Duprin, X09, access control key card reader, balance magnetic switch (BMS), maximum security panic hardware (automatic relocking with local alarm) and closer(s). LKM7000 security features shall meet standards of FF-L-2890.

Door hardware finish shall be chrome-plated brass or bronze, or stainless steel.

Locks, provided by Contractor, shall not require the use of a key, a tool, or special knowledge or effort

for operation from the egress side. When the building is occupied, doors must be able to be opened easily from the side from which egress is to be made. Doors with magnetic locks, with room access via a card reader can be considered a normal door if the door has a lever handle (or panic hardware as required by code) with an integral switch releases the lock to allow free egress by the building occupants.

Refer to Part Three, Room Requirements and Part Six, Security Plans. All secures door hardware to comply with the Secure Room (Open Storage Area) requirement of the SECNAV M-5510.36 Department of Navy Information Security Program.

C102090 OTHER INTERIOR SPECIALTY DOORS

Not Applicable.

C102091 OTHER INTERIOR PERSONNEL DOORS

Not Applicable.

C1030 SPECIALTIES

C103001 COMPARTMENTS, CUBICLES, & TOILET PARTITIONS

Provide phenolic core toilet partitions in all toilet rooms with more than one water closet or urinal. Provide toilet partitions as indicated in Chapter 3, “Room Requirements” portion of this RFP.

C103002 TOILET AND BATH ACCESSORIES

Provide toilet accessories as indicated in Chapter 3, “Room Requirements” portion of this RFP.

C103003 MARKER BOARDS AND TACK BOARDS

Provide blocking for the marker boards and tack boards as part of the construction contract. Marker boards (or white boards) and tack boards are funded as part of the construction contract. Provide marker boards as indicated in the Room Requirements. Marker boards to be 8’long x 4’high.

C103004 IDENTIFYING DEVICES

All necessary interior signage shall be incorporated as part of the architectural drawings. Interior signage is not collateral equipment. Interior signage shall demonstrate complete coordination with the facility design, SID and FF&E submittals. Provide interior directional signage as required for facility wayfinding and as indicated in the “Room Requirements”. Provide an identifying device at each interior door. Provide all code required signage and provide projecting fire extinguishers cabinet signs. Signs must meet ADA requirements.

C103005 LOCKERS

Lockers are funded as part of the FF&E Package.

C103006 SHELVING

Provide built-in shelving as indicated in Chapter 5, Room Requirements. Built-in Shelving is to be 30" deep in room 117 as stated in room requirement sheets. Shelving is to be commercial grade metal, specific supported weights, heights and desired configurations will need to be verified with the user after contract award.

C103007 FIRE EXTINGUISHER CABINETS

Provide fire extinguisher cabinets. Cabinet shall be semi-recessed in new construction and surface-mounted in new mechanical/electrical spaces and existing wall construction. Cabinets shall be coordinated with interior finishes

C103008 COUNTERS

Provide solid acrylic counter tops and full height back splashes. Provide quartz countertops in the Lobby on the reception desk and on casework in the War Room.

C103009 CABINETS

Provide cabinetry and millwork items with associated accessories. Cabinetry shall be AWI custom grade and have concealed hinges with adjustable standards for shelves, except the Lobby reception desk which shall be AWI Premium grade. All exposed surfaces will be high pressure plastic laminate clad or hardwood veneer with exposed edges of solid hardwood.

Provide plastic laminate clad apron at Men's and Women's restrooms. Provide hardwood veneer casework at check in desk in Lobby 101. Provide plastic laminate clad wall and base cabinets in Break Areas. Provide hardwood veneer base cabinets in MSTP War Room.

Provide specific cabinetry as shown on the Room Requirements Sheets.

C103010 CASEWORK

Not Applicable.

C103011 CLOSETS

Not Applicable.

C103012 FIRESTOPPING PENETRATIONS

Provide all sleeves, caulking, and flashing for fire stopping penetrations.

C103013 SPRAYED FIRE-RESISTIVE MATERIALS

Provide sprayed fire-resistive materials to the building's framework to prevent structural failure

C103014 ENTRANCE FLOOR GRILLES AND MATS

Provide recessed pan floor mats at all building entrances.

C103015 ORNAMENTAL METAL WORK

Stainless steel rails with safety glass guards with fully recessed glazing channel at Communicating Space.

C103090 OTHER INTERIOR SPECIALTIES

Provide wall or ceiling mounted motorized projection screen as approved by client.

Provide above ceiling mounted projector or ceiling mounted projector as approved by client.

--End of Section--

THIS PAGE HAS BEEN INTENTIONALLY LEFT BLANK

6. ENGINEERING SYSTEMS REQUIREMENTS

C20 STAIRS

SYSTEM DESCRIPTION

Stairs, including stair construction and stair finishes, shall be provided as required by the building code to provide egress from the building from above or below grade level floors. Stairs shall be in accordance with UFC 1-200-01, *General Building Requirements*.

GENERAL SYSTEMS REQUIREMENTS

C2010 STAIR CONSTRUCTION

C201001 INTERIOR AND EXTERIOR STAIRS

Interior stairs shall be constructed of steel with concrete filled pans.

Exterior stairs shall be constructed of cast-in-place reinforced concrete.

Concrete is an acceptable finish for exterior stairs. Exterior concrete stairs shall have cast aluminum treads with abrasive surface.

Steel stairs shall be primed and painted.

C201002 FIRE ESCAPE STAIRS

Not Applicable.

C201090 HANDRAILS, GUARDRAILS, AND ACCESSORIES

Handrails and guardrails shall be painted steel at interior stairs, galvanized steel at exterior and prefinished stainless or prefinished aluminum with glass at communicating space. Handrails and guardrails shall present a smooth, unbroken surface throughout the length of the stair.

Handrails and guardrails shall be finished to withstand extreme wear conditions.

Metal ladders and railings complying with OSHA requirements shall be provided for access and protection to elevator pit and roof.

--End of Section--

THIS PAGE HAS BEEN INTENTIONALLY LEFT BLANK

6. ENGINEERING SYSTEMS REQUIREMENTS

C30 INTERIOR FINISHES

SYSTEM DESCRIPTION

Interior finishes include wall finishes, floor finishes, wall base finishes, and ceiling finishes.

Provide aesthetically pleasing, purposeful, and, durable finishes appropriate to the buildings function. Acoustic properties of materials, as well as durability and ease of maintenance, shall be considered during material selection. Maximize the use of sustainable materials.

Color selections require the use of wall and floor finish material accents to enhance the color and appearance of the interior design. Provide a wall and floor color design that includes a minimum of two different accent colors throughout the facility. Submit pattern drawings of the accent designs with the interior design submittal.

GENERAL SYSTEMS REQUIREMENTS

See "Room Requirements for specific requirements on "Interior Finishes".

C30 SSPC QP 1 CERTIFICATION

Not Applicable.

C3010 WALL FINISHES

All interior wall finishes are indicated in the “Room Requirements” portion of this RFP.

Interior wall finish materials shall include concrete masonry where indicated in Room Requirement sheets.

Interior wall finish materials shall include gypsum board. Provide ceramic tile wainscot in all toilet rooms to a height of 5 feet and full-height ceramic tile in shower areas. Tile pattern to include three colors. Ceramic tile to be 4 ¼” x 4 ¼” x 5/16” and have fully coordinated trim pieces available. Provide epoxy grout.

Provide acoustic fabric wrapped panels adhered to walls where indicated in Room Requirement sheets to meet NRC requirements of the room/space.

Provide epoxy paint on all toilet and shower area painted surfaces. Paint for all other surfaces shall be latex based.

Provide vinyl acrylic extrusion corner guards in Lobby and all corridors. Corner guards to extend full-height from top of wall base to ceiling. Provide stainless steel corner guards, 48” high at loading area.

C3020 FLOOR FINISHES AND BASE

All interior floor finishes are indicated in the “Room Requirements” portion of this RFP. Provide floor finish materials to meet the following requirements:

A. Modular Carpet Requirements

CARPET CHARACTERISTIC	MINIMUM CARPET REQUIREMENTS
Surface Color	Multi-colored and Patterned
Surface Texture	Textured Loop
Yarn Weight	26 oz. Minimum
Density	6600 oz./cubic yard min.
Dye Method	Solution Dyed
Backing	Industry Standard
Fiber	Branded nylon
Size	24”x24”

B. Concrete Floor Requirements

Finish concrete surface smooth enough to meet the minimum requirements of this RFP or the floor finish manufacturer's smoothness requirements, whichever is the most restrictive. Exposed concrete floors that are not required to have an applied floor finish, shall receive a minimum of 3 coats of the manufacturer's approved sealer.

C. Raised Floor Requirements

Raised Flooring shall be interchangeable 24"x24" square module panels capable to support design loads. Finish to be carpet tile- on module. Raised flooring shall accommodate data, electrical and mechanical systems. Majority of Raised Flooring components to be available on GSA Schedule.

D. Resilient Floor Finishes

Provide resilient floor finishes as identified in the Room Requirements portion of this RFP. Include manufacturer's full line of color, texture and pattern selections, including multi-colored materials.

1) Resilient Sheet Flooring

Provide homogeneous vinyl sheet flooring in areas as indicated that require flooring with high durability, low maintenance and high stain-resistance. All sheet flooring shall be commercial quality with minimum wear layer thickness of 0.066 inch. It shall be non-layered, non-backed and include a protective urethane finish for ease of maintenance. Seams shall be recess scribed and heat welded. Sheet flooring shall require no-wax maintenance.

2) Resilient Tile Flooring

Provide resilient vinyl composition tile (VCT) flooring in areas as indicated that require flooring with moderate durability, and low cost. VCT shall be commercial grade, with pattern through thickness of

tile. VCT with biobased materials or recycled content shall be used where practical.

Provide resilient rubber tile in stair landings, and in areas requiring floors with high durability, low maintenance, high slip-resistance requirements. Rubber tile shall be 100% synthetic rubber with through color and slip resistant formulation and surface texture. Include all manufacturer's standard surface textures and patterns. The product shall require no-wax maintenance. Provide rubber stair treads with integral risers in compatible texture and color.

Provide resilient static dissipative (SDT) flooring in areas as indicatedfor floors with, requiring high durability, low maintenance, and static protection. SDT shall be of commercial grade with through pattern and an antistatic additive, and shall be installed according to manufacturer's instructions.

E. Tile Floor Finishes

Provide 2”x2”x1/4” unglazed porcelain tile in all toilet and shower areas. Provide epoxy grout.

Provide 12”x24”x3/8” decorative porcelain tile in areas as indicated. Tile pattern to include three colors. Provide epoxy grout.

F. Base

Wall base shall be rubber with cove profile in all areas of resilient flooring and straight profile in all areas of carpet flooring. Provide job formed corners.

Wall Base Size: 4” high x 1/8” thick by coiled length.

Wall base shall be porcelain tile in the Lobby that matches the porcelain floor tile.

C3030 CEILING FINISHES

Ceiling finishes shall be as indicated in the “Room Requirements” portion of this RFP.

Finished surface of ceiling tiles shall be selected to address acoustical, maintenance, moisture or impact resistance requirements of the room.

Primary ceiling finish shall be 24 inch by 24 inch by 5/8 inch minimum thickness suspended acoustical panel ceiling system, except provide a suspended gypsum board ceiling in entrance lobby, restrooms and showers and other areas as indicated on the “Room Requirements”. Acoustical panels shall have a tegular edge. Provide fine fissured panel surface. For projects that require a LEED rating provide environmentally friendly panels.

Ceiling finish material shall include gypsum board.

Exposed structural systems shall be painted according to PTS Section C3040 INTERIOR COATINGS AND SPECIAL FINISHES.

C3040 INTERIOR COATINGS AND SPECIAL FINISHES

Paint all interior exposed surfaces including metal items, such as interior grilles, registers, diffusers, access panels, and panel boxes.

All finish coatings shall be as indicated in the "Room Requirements" portion of this RFP.

--End of Section--

THIS PAGE HAS BEEN INTENTIONALLY LEFT BLANK

6. ENGINEERING SYSTEMS REQUIREMENTS

D10 CONVEYING

SYSTEM DESCRIPTION

Conveying System shall include elevators.

D1010 ELEVATORS

Design assembly and arrangement of elevator, accessories, and supporting systems in accordance with ASME/ANSI A17.1 and NAVFAC ITG FY 2013, *Elevator Design Guide*. Provide all materials and equipment, including but not limited to elevator cab and hoist equipment, operating and signal fixtures, doors, door and car frames, car enclosure, controllers, motors, guide rails, brackets, and testing.

D101001 GENERAL CONSTRUCTION ITEMS

Provide a traffic analysis.

D101002 PASSENGER ELEVATORS

Provide a minimum of one passenger elevator(s) designed to carry furniture/ equipment items. Locate elevator in Lobby area, within visual control of the check-in desk.

Provide a minimum of one elevator sized to comply with the IBC medical stretcher requirement and also designed to vertically transport the largest movable equipment or furniture used on the project.

Derive finishes and fixtures from Manufacturer's selections. Coordinate finishes with the interior architectural design, and meet the User's needs and functions. Coordinate the design of the elevator machine room with applicable codes and the elevator manufacturer's requirements.

Provide hydraulic elevators for elevator travel distances of 44 feet (13.41 meters) or less and electric traction elevators for travel distances greater than 44 feet (13.41 meters). Provide minimum hydraulic elevator car speed of 125 feet per minute (38.1 meters/ minute) for elevator travel distances of 15 feet (4.5 meters) or less and 150 feet/minute (45.7 meters/ minute) for hydraulic elevator travel distances greater than 15 feet (4.5 meters). Provide minimum electric traction elevator car speed of 350 feet per minute (106.6 meters/ minute).

D101003 FREIGHT ELEVATORS

Not Applicable.

D101004 WHEELCHAIR LIFT

Not Applicable.

D101005 DUMBWAITERS

Not Applicable.

D101090 OTHER VERTICAL TRANSPORTATION EQUIPMENT

Not Applicable.

D1020 WEIGHT HANDLING EQUIPMENT

Not Applicable.

D102001 OVERHEAD CRANES .

Not Applicable.

D102002 MONORAIL SYSTEMS

Not Applicable.

D1030 ESCALATORS AND MOVING WALKS

Not Applicable.

D103001 ESCALATORS

Not Applicable.

D103002 MOVING WALKS

Not Applicable.

D103003 OTHER MOVING STAIRS & WALKS

Not Applicable.

D1090 OTHER CONVEYING SYSTEMS

Not Applicable.

D109001 PNEUMATIC TUBE SYSTEMS

Not Applicable.

D109002 CONVEYORS

Not Applicable.

D109003 LINEN, TRASH, AND MAIL CHUTES

Not Applicable.

D109004 TURNTABLES

Not Applicable.

D109005 OPERABLE SCAFFOLDING

Not Applicable.

--End of Section--

THIS PAGE HAS BEEN INTENTIONALLY LEFT BLANK

6. ENGINEERING SYSTEMS REQUIREMENTS

D20 PLUMBING

Refer to Part 4 Section D20 for performance requirements of the building elements included in the plumbing system.

SYSTEM DESCRIPTION

The plumbing system for the P677 TECOM Academic Instruction Facility consists of all fixtures, potable cold and hot water piping and equipment, piping insulation, water heating equipment, sanitary waste and vent piping systems, and other specialty piping and equipment within 5 feet of the building. Refer to Building Requirements, Space Tabulations Section of the Project Program for building occupancy levels.

GENERAL SYSTEM REQUIREMENTS

Provide working space around all equipment. Provide concrete pads under all equipment. Provide all required fittings, connections and accessories required for a complete and usable system. All equipment shall be installed per the criteria of PTS section D20 and the manufacturer's recommendations. Design and installation shall be in accordance with UFC 3-420-01, *Plumbing Systems*, UFC 3-401-01, *Mechanical Engineering*, and UFC 1-200-02, *High Performance and Sustainable Building Requirements*. The advisory provisions of all UFCs, codes, and standards shall be mandatory. All UFCs and Federal Standards are applicable, whether listed or not. Where the word "should" is used in the manufacturer's recommendations, substitute the word "shall".

Include the domestic hot water system in the building commissioning effort described in Part 3 Chapter 2, Section 2.3.4.

Above ceiling plumbing cleanouts shall be readily accessible via removable ceiling tiles or access panels.

The plumbing system shall be designed to achieve 2 points under LEED-NC version 3.0 Water Efficiency Credit 3 (30% water use reduction).

The building shall be designed to meet the requirements of EPAct 2005.

All above-grade domestic water, sanitary waste, and vent piping shall be installed on the conditioned side of the building envelope.

D2010 PLUMBING FIXTURES

Provide quantity and type of plumbing fixtures required for the occupancy, use, and functions described for this facility. Refer to Room Requirements Section for additional specific requirements for spaces with plumbing fixtures. Provide handicapped fixtures in accordance with the referenced criteria in the Project Program.

D201001 WATER CLOSETS

Refer to Room Requirement Section for the number and type of water closets required.

Provide wall mounted manual flush valve low flow water closets in all public restroom spaces.

D201002 URINALS

Refer to Room Requirement Section for the number and type of urinals required.

Provide manual flush valve low flow urinals in all public restroom spaces.

D201003 LAVATORIES

Refer to Room Requirement Section for the number and type of lavatories required.

Provide all lavatories with manual faucet control.

Provide undercounter lavatories where indicated in the Room Requirement Section. Undercounter lavatories shall be ASME A112.19.3-08/CSA B45.4-08 stainless steel lavatories with minimum dimensions of 20 inches wide x 18 inches front to rear, undermount type with overflow drain.

Faucets shall be EPA “WaterSense” labeled. Provide all lavatories with aerator, adjustable P-traps, and perforated grid strainers. All lavatories shall have a maximum flow rate of 0.5 gpm when tested in accordance with ASME A112.18.1/CSA B125.1.

D201004 SINKS

Refer to Room Requirement Section for the number and type of sinks required.

Provide countertop kitchen sink with two compartments in the Break Area spaces. Provide waste disposer unit.

Provide a mop sink in the janitor closets.

D201005 SHOWERS/TUBS

Refer to Room Requirement Section for the number of showers required.

Provide a terrazzo shower floor and shower supply fittings in the men’s and women’s shower spaces. Refer to Part 3 Section C3010 Wall Finishes for shower wall construction. Provide EPA Watersense labeled shower heads.

D201006 DRINKING FOUNTAINS AND COOLERS

Refer to Room Requirement Section for the number and type of water coolers required. Water coolers shall be stainless steel, refrigerated, bi-level ADA type. Units shall be certified lead-free. Provide two-stage filters in water coolers. The first stage of filtration shall remove sediment and the second stage shall filter particles one micron in diameter and shall remove lead (to a level at or below 15 ppb), cysts, and chlorine.

Provide water coolers with timeclock controls for night setback. Each timeclock shall be located above the ceiling over the water cooler that it serves and shall be readily accessible for maintenance.

D201090 EMERGENCY FIXTURES

Not Applicable.

D2020 DOMESTIC WATER DISTRIBUTION

A flow test was performed and the results are included in Part 6 of the RFP.

D202001 PIPES AND FITTINGS

Provide copper tubing and fittings for above ground and buried piping.

D202002 VALVES & HYDRANTS

Provide isolation valves at supply to each floor. Provide hose bibbs in mechanical rooms. Provide wall hydrants along the building exterior such that all points along the perimeter can be reached with a 100 foot long hose.

D202003 DOMESTIC WATER EQUIPMENT

Provide horizontal RPZ type backflow preventers at points within domestic water systems as specified by IPC. Do not provide a bypass around the backflow preventer without equal protection. Taps upstream of the backflow preventer are prohibited. Locate inside the main mechanical room at a height that is readily accessible and serviceable from the floor (maximum height of 48 inches above finished floor). Provide horizontal RPZ type backflow preventers with strainers at all HVAC potable water connections.

Provide natural gas fired or electric storage type water heater for heating of domestic water.

Provide water tempering valve assembly.

Provide in-line circulator for domestic hot water distribution system.

Provide a packaged, domestic water booster system for the domestic water distribution system. The booster system shall consist of a minimum of two pumps with variable frequency drive operation and packaged controls. The booster system shall be monitored by the building direct digital control (DDC) system. The minimum points to be monitored shall include system pressure, pump statuses, and system alarms. Provide a valved bypass line around the booster system to allow for manual bypass of the pumps.

D202004 INSULATION & IDENTIFICATION

Provide mineral fiber insulation with vapor barrier on domestic hot water supply and recirculation piping. Provide cellular glass insulation with vapor barrier on domestic cold water supply piping. Provide identification for piping and equipment.

D202005 SPECIALTIES

Provide ice maker connector box for refrigerators. Provide backflow preventer at ice maker connection.

D202090 OTHER DOMESTIC WATER SUPPLY

Provide piping supports in accordance with the IPC. Provide inspections, disinfection, and testing in accordance with the IPC.

D2030 SANITARY WASTE

D203001 WASTE PIPE & FITTINGS

Provide cast iron hub and spigot or hubless pipe and fittings, rubber compression gasket joints for above ground installation. Provide cast iron hub and spigot pipe and fittings for below ground installation.

D203002 VENT PIPE & FITTINGS

Provide cast iron hubless pipe and fittings, or plastic PVC piping, fittings, and solvent cement.

D203003 FLOOR DRAINS

Provide floor drains with trap primers in mechanical rooms, restrooms, vending areas, janitorial closets, plumbing chase areas, and other designated spaces. Provide floor drains in mechanical rooms in the vicinity of each backflow preventer, pump, boiler, water heater, expansion tank, and air handling unit which generates condensate.

D203004 SANITARY & VENT EQUIPMENT

Provide a sump pump in the elevator pit. Provide sump pump with manufacturer's packaged controls to disable the pump and sound an alarm upon detection of oil in the sump. The sump pump shall be monitored by and alarm to the building DDC system.

D2040 RAIN WATER DRAINAGE

D204001 PIPE & FITTINGS

Not Applicable.

D204002 ROOF DRAINS

Not Applicable.

D204004 INSULATION & IDENTIFICATION

Not Applicable.

D204090 OTHER RAIN WATER DRAINAGE SYSTEM

Not Applicable.

D2090 OTHER PLUMBING SYSTEMS

D209001 SPECIAL PIPING SYSTEMS

Obtain natural gas pressures from the local natural gas utility provider, Columbia Gas. The contractor must verify and coordinate the gas supply capacity with Columbia Gas. See Part 3 G306006 for additional information.

Provide steel natural gas piping. Natural gas piping greater than 2 inches in diameter shall be welded. Paint natural gas piping yellow.

D209002 ACID WASTE SYSTEMS

Not Applicable.

D209003 INTERCEPTORS

Not Applicable.

D209005 COMPRESSED AIR SYSTEM (NON-BREATHING)

Not Applicable.

D209090 OTHER SPECIAL PLUMBING SYSTEMS

Radon-resistant construction measures shall be incorporated in the building in accordance with Section 4.3 (and associated subsections) of the U.S. Navy Radon Assessment and Mitigation Program Guidebook for Radon Management in Nonresidential Buildings located in Part 6 of the RFP. The “Method 3: Mitigation-Ready” option described in Section 4.3.1.4 shall be employed to address subslab gas collection

--End of Section--

THIS PAGE HAS BEEN INTENTIONALLY LEFT BLANK

D30 HVAC

Refer to Part 4 Section D30 for performance requirements of the building elements included in the HVAC system.

SYSTEM DESCRIPTION

Provide a water source heat pump heating, ventilating and air conditioning (HVAC) system for the P677 TECOM Applied Instruction Facility that attains the following objectives: occupant comfort, indoor air quality, acceptable noise levels, energy efficiency, reliable operation, and ease of maintenance. Design and installation shall be in accordance with UFC 3-401-01, *Mechanical Engineering*, UFC 3-410-01, *Heating, Ventilating, and Air Conditioning Systems*, and UFC 1-200-02, *High Performance and Sustainable Building Requirements*. The advisory provisions of all UFCs, codes, and standards shall be mandatory. All UFCs and Federal Standards are applicable, whether listed or not. Refer to Building Requirements, Space Tabulations Section of the Project Program for building occupancy levels.

The building shall be designed to meet the requirements of EPAct 2005.

Provide a warranty for No Mold and Mildew. Each facility shall have no evidence of mold or mildew due to condensate or other moisture on any indoor or interior surfaces after two years of service or facility operation. The Contractor shall provide a two year warranty for no mold or mildew after the facility has been accepted. In the event that mold or mildew is found, the Contractor shall, at his cost, investigate and provide reports, remove the mold and mildew, repair damage, and replace as necessary where repair does not resolve the mold and mildew.

GENERAL SYSTEM REQUIREMENTS

Provide working space around all equipment. Provide all required fittings, connections and accessories required for a complete and usable system. All equipment shall be installed per the criteria in PTS Section D30 and the manufacturer's recommendations. Where the word "should" is used in manufacturer’s instructions, substitute the word "shall".

Provide air conditioning and heating for spaces as indicated and for the following design conditions:

Outdoor Conditions

In accordance with UFC 3-401-01, Mechanical Engineering.

Indoor Conditions – All occupied spaces unless otherwise noted

Summer	76	Degrees F dry bulb	Winter	68	Degrees F
	50	%RH			

Inside Conditions – Data Rooms, Server Rooms, Control Rooms

Summer	75	Degrees F dry bulb	Winter	75	Degrees F
	50%	%RH		50%	%RH

Inside Conditions – Spaces that are heated and ventilated only

Summer	10	Degrees F dry bulb above ambient	Winter	55	Degrees F

Provide Ventilation rates and systems per the latest edition of ASHRAE Standard 62.1, *Ventilation for Acceptable Indoor Air Quality*.

The HVAC system shall provide each zone with the choice of heating or cooling year round unless otherwise indicated. Each zone shall have its own limited range of control, as allowed by the control system central workstation.

Zone the HVAC system as follows:

Each Data Room, Server Room, Control Room, and classroom shall be a separate zone.

The mechanical room, electrical room, and fire protection room shall be separate zones, heated and ventilated only.

For all other areas, the following zoning requirements apply:

- Thermal zones shall not group more than three spaces.
- Thermal zones shall not group spaces with dissimilar exterior exposures.
- Thermal zones shall not group spaces that have dissimilar occupancy patterns.

Provide minimum 4-inch thick concrete housekeeping pads and vibration isolators under all floor-mounted equipment.

All outdoor mechanical equipment shall have painted finishes that pass a salt-spray test conducted per ASTM B117 for duration of at least 500 hours.

Provide emergency HVAC shutoff switch(es) in accordance with UFC 4-010-01.

D3010 ENERGY SUPPLY

D301001 OIL SUPPLY SYSTEM

Not Applicable.

D301002 GAS SUPPLY SYSTEM

Refer to Part 3 Chapter 6 D209001, Special Piping Systems, for natural gas system requirements.

D301003 STEAM SUPPLY SYSTEM (FROM CENTRAL PLANT)

Not Applicable.

D301004 HOT WATER SUPPLY SYSTEM (FROM CENTRAL PLANT)

Not Applicable.

D301005 SOLAR ENERGY SUPPLY SYSTEMS

Not Applicable.

D3020 HEAT GENERATING SYSTEMS

The heating load for this facility shall be served by distributed water to air heat pumps, with gas-fired condensing boilers to maintain the minimum condenser water loop temperature.

D302001 BOILERS

Provide a minimum of two packaged natural gas-fired condensing boilers to maintain the minimum condenser water loop temperature. Each boiler shall be sized to meet 100% of the design heating load. The boilers shall operate in a lead/standby configuration. Provide pre-manufactured, multi-wall boiler stacks. Provide each boiler with a condensate neutralization kit. Boilers shall be designed to operate in the condensing range. Boilers must be provided with low NOx burners.

The MCB Quantico Air Program Manager must be provided with detailed boiler specifications prior to boiler procurement. Information must include and is not limited to: boiler make and model numbers, design capacity, fuel types, emission rates, and proposed installation and startup dates.

Provide boiler controls in compliance with ASHRAE 135 *BACnet – A Data Communication Protocol for Building Automation and Control Networks*.

After boiler startup, there shall be a certification test performed by the NAVFAC Washington boiler inspector. The Quantico ROICC should contact the ROICC advocate at the Washington Navy Yard to arrange this test. The Contractor must schedule this certification test a minimum of 30 days in advance with the ROICC office. The building cannot be occupied until the boiler has been certified.

D302002 FURNACES

Not Applicable.

D302003 FUEL-FIRED UNIT HEATERS

Not Applicable.

D302004 AUXILIARY EQUIPMENT

Not Applicable.

D302005 EQUIPMENT THERMAL INSULATION

Provide insulation for condenser water pumps and other associated heating equipment.

D3030 COOLING GENERATING SYSTEMS

D303001 CHILLED WATER SYSTEMS

Not Applicable.

D303002 DIRECT EXPANSION SYSTEMS

Provide a factory assembled galvanized steel with stainless steel basin closed circuit cooler to serve the water source heat pump system. Provide cooler with two cells, each sized to meet 2/3 of the design system cooling load and capable of operating in a lead/lag configuration. Each cell shall be piped and powered so that they can run independently of one-another. Provide closed circuit cooler with integral water recirculation pumps, variable speed fans, sump heater, electronic level control, and working platform/ladder for maintenance access.

Provide horizontal water source heat pump units with ducted air distribution and controls to serve the heating and cooling requirements of the facility. One horizontal water source heat pump unit shall be provided for each zone and shall be located above the ceiling with a means for removal and maintenance of the system through lockable access panels or removable ceiling tiles. Provide each water source heat pump with a return filter grille fitted with a MERV 8 filter to ease maintenance. Install flexible stainless steel piping connections (hose kits) between water source heat pumps and piping. Install vibration isolators on heat pumps. Water source heat pumps shall be located above ceilings in normally unoccupied spaces (i.e., corridors and common areas) to the greatest extent possible. Occupied spaces include classrooms and offices. Water source heat pumps may be located in an open office space where no adjacent corridors or normally unoccupied spaces are available. When locating WSHPs in an open office, coordinate the location of the equipment such that it is above circulation pathways or common areas rather than above workstations/desk. Provide water source heat pumps with sound attenuating packages. Water source heat pumps shall not be located within electrical or comm rooms.

A dedicated outside air handling unit (DOAHU) shall be provided to supply room-neutral conditioned ventilation air directly to the occupied spaces of the building. The DOAHU shall be an indoor water source heat pump unit with MERV 8 prefilters, MERV 13 final filters, DX coil, reheat coil with modulating hot gas reheat controls, air-to-air heat recovery from the building exhaust airstream, and ultraviolet disinfection system.

Provide a water-cooled DX computer room air conditioning unit in the Shared Control Room space. Utilize the building condenser water loop for heat rejection. Unit shall be a computer room air conditioner capable of precise space temperature and humidity control. Provide an overhead air distribution system which is coordinated with the data rack configuration to provide uniform cooling throughout the space.

Provide a water-cooled DX computer room air conditioning unit to serve each Data Room space and M&S Server space. Utilize the building condenser water loop for heat rejection. Unit shall be a computer room air conditioner capable of precise space temperature and humidity control. Provide an overhead air distribution system which is coordinated with the data rack configuration to provide uniform cooling throughout the space.

All equipment containing refrigerant must be procured and maintained in accordance with the base Refrigerant Management Plan and Environmental Management System guidelines. All work must be conducted by a technician certified by the Environmental Protection Agency. A copy of the technician's certification must be kept on file and a copy must be submitted to the Air Program Manager (APM) prior to work being performed. Venting of refrigerant is prohibited.

Submit a completed copy of the Marine Corps Base Quantico Refrigerant Service Form located in Part 6 of the RFP by fax to the APM at (703) 784-4953.

The APM must be provided with specifications of new units to be installed. This information must include: type of unit (air handler, condensing unit, walk-in refrigerator, etc.), manufacturer, model number, serial number, number of refrigerant circuits, refrigerant charge in each circuit (in pounds and ounces), type of refrigerant to be used, cooling capacity in tons, voltage, phase, hertz, and

horsepower. Submit this information by faxing the completed Marine Corps Base Quantico ODS Equipment Reporting Form located in Part 6 of the RFP to the APM at (703) 784-4953.

After obtaining Maximo equipment inventory tags as described in Part 3 D309001, provide the inventory numbers for the refrigerant containing equipment to the APM.

Provide equipment which utilizes non-ozone depleting substance (ODS) refrigerants.

D3040 DISTRIBUTION SYSTEMS

D304001 AIR DISTRIBUTION, HEATING & COOLING

Provide insulated, galvanized steel ductwork constructed, braced, reinforced, installed, supported, and sealed per the IMC and SMACNA standards. Provide ducted supply and return air distribution systems. Return air plenums are not permitted.

Provide grilles, registers, and diffusers. Provide aluminum air devices in spaces subject to high humidity such as showers and locker areas. Select air terminals with velocities and throws to provide air distribution for the space that they serve in accordance with the recommendations of 2011 ASHRAE Fundamentals Handbook Chapter 57.

D304002 STEAM DISTRIBUTION SYSTEMS

Not Applicable.

D304003 HOT WATER DISTRIBUTION SYSTEMS

Not Applicable.

D304004 CHANGEOVER DISTRIBUTION SYSTEMS

Not Applicable.

D304005 GLYCOL DISTRIBUTION SYSTEMS

Not Applicable.

D304006 CHILLED WATER DISTRIBUTION SYSTEMS

For exterior condenser water distribution systems, coordinate with Section G30, *Site Civil/Mechanical Utilities*.

Provide two variable volume secondary loop condenser water pumps in the Mechanical Room to serve the building, each sized for 100 percent of the maximum flow to the building and controlled in a lead/standby configuration. Provide two-way control valves at the water source heat pumps. Pumps may be inline or base mounted type.

Provide steel or copper condenser water supply and return piping to serve the HVAC equipment throughout the facility. Insulate piping with cellular glass insulation.

Provide air control and chemical treatment equipment for the condenser water piping system.

Provide an expansion tank for the condenser water piping system.

Provide system flushing and start-up for the condenser water piping system.

D304007 EXHAUST SYSTEMS

Provide ductwork constructed, braced, reinforced, installed, supported, and sealed per the IMC and SMACNA standards.

Provide ducted exhaust systems and exhaust fans to serve all ventilated zones of the facility. Ventilated zones include, but are not limited to, toilet rooms, janitor closets, and storage rooms. Provide air-to-air energy recovery between the building exhaust airstream and the dedicated outside air handling unit (see Part 3 D303002).

D304008 AIR HANDLING UNITS

Provide dedicated outside air handling unit as described in Section D303002.

D304090 OTHER DISTRIBUTION SYSTEMS

Provide two in-line boiler circulating pumps (one for each boiler) to circulate condenser water from the primary loop to the boilers, each sized for 100 percent of design boiler flow and controlled to operate in tandem with the boiler that is serves.

All air conditioning condensate drain piping shall be copper with flexible unicellular insulation and shall discharge to the sanitary waste system.

D3050 TERMINAL & PACKAGE UNITS

D305002 UNIT HEATERS

Not Applicable.

D305003 FAN COIL UNITS

Not Applicable.

D305004 FIN TUBE RADIATORS

Not Applicable.

D305005 ELECTRIC HEATING

Provide electric unit heaters to heat the mechanical room, fire protection room, and electrical room spaces. Provide electric wall heaters adjacent to all doors to the exterior of the building.

D305006 PACKAGE UNITS

Not Applicable.

D3060 CONTROLS AND INSTRUMENTATION

D306001 HVAC CONTROLS

D306001 1.1 DIRECT DIGITAL CONTROLS (DDC)

Provide a complete Direct Digital Control (DDC) system to comply with UFGS 23 09 23.13 20 *BACnet Direct Digital Control Systems for* HVAC and ANSI/ASHRAE Standard 135-2012 for the facility.

The building DDC system shall control the building mechanical systems to maximize energy performance. The commissioning process shall seek to maximize this performance. The occupancy schedules and profiles of the building occupants shall be accounted for in the optimization of the building DDC system schedules and reset sequences.

The Quantico Energy Management Control System Network consists of building HVAC control devices connected via a LAN to a central, standalone Siemens Apogee system which serves as the base Energy Management Control System (EMCS). This is a non-NMCI, government owned-government operated network. The servers reside in a Network Operations Center (NOC) located on the Main Side of Quantico.

All building DDC systems shall seamlessly integrate with the existing Siemens Apogee system located at the Main Side NOC. After the contract award, the Contractor's Basis of Design shall include a thorough explanation of how a seamless, successful interface between new and existing DDC systems is to be accomplished. As part of construction, provide:

1) Advance proof (including an existing case study) that their system blends seamlessly with the servers, network and Siemens application on the existing server. This shall be submitted for Government approval.

2) Thorough testing and advanced commissioning that shall include factory trained technicians from both systems so that there will be seamless integration of the project's DDC systems with the base Siemens Apogee system and no warranty violation or reliabilities issues between applications to achieve a local and remotely controlled system.

3) Any second season or deferred commissioning shall include all remote monitoring and control capabilities of the project's DDC system through the base Siemens Apogee system.

After successful completion of other commissioning activities, provide a final commissioning at the existing Siemens Apogee server located in Building 3252. Commissioning shall include the building DDC system interface and integration with the existing base Siemens DDC system.

The building DDC system shall use BACnet/IP and MS/TP for the floor, building and management levels.

The existing base EMCS Network consists of a Cisco Switch located at building 1999, with nodes located though out the base. These nodes provide connectivity to the campus twisted pairs and fibers. IEEE 802.3 standard Ethernet is used for communication. Where there is base cable coverage, fiber connectivity is available. DDC is coordinated through G6 and public works. All network and computer/peripheral equipment must meet DIACAP, STIG's approval for security standards.

Base facilities personnel shall be able to view the facility in a dynamic range on the DDC application.

The building DDC system shall utilize 1) Layer II or Layer III managed Ethernet Switches that conform with Defense Information Systems Agency (DISA) Security Technical Implementation Guides (STIGs) (where Ethernet switches are required); and 2) network equipment that is compatible with the existing EMCS system and infrastructure with which it will be fully integrated. Provide a government approved standard rack mounted network 24 port/4 port single mode fiber switch with minimum 4 SFP 10K transceivers. This device shall be located in Data Room 111. The network management will fall under the control of the Marine Corps. All network equipment shall be configured by the base G6.

This network will come under control of the MRAN, Marine Corps enterprise network manager, local G6 Landon Fielder/Adam Taylor. All network communication equipment shall be located in a secure base telephone room, or in a locked container that meets government I&A approval.

The utility grade metering devices provided for building consumption of water, electricity, and natural gas shall be integrated into the Advanced Metering Infrastructure application/servers/network at MCB Quantico. They shall not be connected to the building DDC system. Refer to metering requirements in Part 3, Chapter 6 D50 and G30.

The DDC software at the building level and base EMCS level will allow the customer, base O&M personnel, to view the program code and make edits, create and edit the graphics, command points on the graphics, add or remove points, edit accounts, audit accounts, provide dynamic plotting, and allow backup and restore of the database.

Use the existing points naming convention and comply with the Base site-specific BACnet network addressing architecture from the matrix that is standard for Quantico MCB (available from Quantico Public Works branch), subject to government approval. Coordinate with the Base for BACNet instance and device numbers.

The graphics shall be built using the CAD format utilized for design drawings; showing floor plan layout with equipment location. Provide dynamic on-screen links to equipment data. Submit graphics to government for review and approval by the end user.

Provide a new operator workstation and laptop with client server licenses. Register all new workstations, laptops, and network devices with the Base Property Control Officer through the Resident Officer in Charge of Construction. The Base Property Control Officer will identify the location for the operator workstation.

Provide air handlers and all terminal units including heat pumps with discharge/supply temperature sensors.

Provide outside air CFM air flow monitoring stations for all dedicated outside air handling units.

Provide a DDC option for automatic operation of primary circulating pumps whenever outdoor air temperature is below 35 degrees F or when there is a high potential for freeze damage.

Provide control to automatically start back-up pumps (or other HVAC equipment) if the primary device fails. Rotate primary and back-up HVAC equipment monthly (adjustable) with a lead/lag control routine.

Provide night setback scheduling capability for all non-critical areas and equipment to the temperature control zone level. Examples of critical areas include electrical rooms, server rooms, control rooms, and communications rooms. Provide the capability to set hourly scheduling over the course of a calendar year.

Provide all BACnet mapping configuration documents for all DDC/EMCS devices as part of this project.

Provide DDC software license and configure DDC monitoring for Base Facilities.

The Government shall have the option to review the monitoring point selection and remote alarm notification for critical archive storage areas.

All network and DDC devices shall be submitted in advance for government approval.

All variable frequency drives shall be controlled directly by the DDC system.

Provide metering of the condenser water flow rate and condenser water supply and return temperatures for the building. The DDC system shall log this metering data for the purpose of calculating and reporting cooling energy consumption and provide a customized output report for data collection services. The system shall be capable of logging this metering data for a user-definable period of time without overwriting.

Do not place any password--including default passwords--on any of the DDC/EMCS laptops or computers. The Government shall perform the implementation of all passwords. This requirement does not remove the requirement for the system to be capable of password controlled access.

Water source heat pumps and dedicated outside air handling units may be controlled by their packaged manufacturer's controls. However, the DDC system shall be capable of monitoring the minimum points indicated in UFC 3-410-01 Table D-1 for the equipment under packaged manufacturer's controls. All temperature setpoints and setback schedules shall be editable in the DDC system and passed to any packaged equipment controls as appropriate.

D306001 1.2 ELECTRONIC CONTROLS

Not Applicable.

D3070 SYSTEMS TESTING AND BALANCING

Provide complete Testing and Balancing (TAB) of all air and water distribution systems and HVAC equipment.

D307003 HVAC COMMISSIONING

Refer to RFP Part 3 - Project Program, Chapter 2 for Building Commissioning requirements. Mechanical systems to be commissioned include HVAC systems and controls and domestic hot water systems.

D3090 OTHER HVAC SYSTEMS AND EQUIPMENT

D309001 GENERAL CONSTRUCTION ITEMS

Provide seismic design as required by code. Provide equipment bracing as required by UFC 4-010-01, *DoD Minimum Antiterrorism Standards for Buildings.*

As part of this contract, the contractor shall place Maximo equipment inventory tags on all applicable equipment and satisfy all requirements of the Part 6 Attachment, "MCB Quantico Maximo Requirements."

All above ceiling mechanical components shall be readily accessible via removable ceiling tiles or access panels. All above ceiling mechanical components shall be accessible from a ladder that comes within 1 foot of the ceiling. Components that do not meet this criterion must be provided with access via catwalk. Catwalk must be accessible from floor level via step ladder or detachable ships ladder with attachment point above ceiling. Catwalks shall be provided with electrical outlet. No above ceiling mechanical components shall be positioned within 4 feet of any structural component or pendant mounted light fixture that would hinder access of serviceable items.

All HVAC equipment must be installed with manufacturer's recommended service clearances. All HVAC equipment must be accessible for maintenance and must be able to be removed without removing other mechanical equipment.

A factory representative must be available for all rotating equipment that is long-coupled to align equipment and check for excessive vibration and pipe strain at startup.

In addition to the minimum training requirements indicated elsewhere in this RFP, provide the following:

Conduct training for designated personnel in the operation and maintenance of the new mechanical systems installed under this contract to include, but not be limited to, the following: closed circuit coolers, boilers, water source heat pumps, dedicated outside air handling unit, and the DDC/BACnet control system.

The training shall include:

•Teaching students how to install, operate, and maintain all equipment/systems installed as a part of this contract.

•Teaching students to configure, troubleshoot, and perform manufacturer recommended preventive maintenance using a local laptop and software to communicate with the systems.

•Educating the students about the topology of the DDC/EMCS system programming and network interfaces.

Training instructors shall be manufacturer certified instructors.

Provide training following installation of the equipment, but prior to the acceptance tests.

Provide a list of all integrated points and BACnet addresses to include device instance numbers to the students as part of the training.

All training shall include end of course testing approved by each manufacturer.

The training material shall be approved by the Government prior to the beginning of the training program.

Submit a System Training Plan and a copy of the System Training Manual for Government Review at least eight (8) weeks prior to the desired start date for training.

Propose a suggested System Training Schedule for approval no less than four (4) weeks prior to the start of that schedule. Development and approval of the timeframe and logistics must be done in coordination with the Government and MCBQ personnel, to allow for employees to plan in their schedules to attend the training.

Up to 10 personnel shall be trained.

Training shall be for five (5) calendar days for at least eight (8) hours a day for the DDC/BAS/BACnet EMCS and two (2) calendar days for at least eight (8) hours a day for each of the new mechanical systems.

The Government will provide the classroom training facility. Hands-on training shall be done at the facility with the newly installed equipment.

Deliver a manufacturer-approved System Training Manual to each attendee of each training session.

The manual shall include text, graphs, charts, and images to effectively guide the trainees through the training course. The manuals also shall include an agenda, defined objectives for each lesson, and a detailed description of the subject matter for each lesson.

Furnish audiovisual equipment and other training materials and supplies, as required for each training session. Where the Contractor presents portions of the course by audiovisual material, copies of the audiovisual material shall be delivered to the Government either as part of the printed manuals or on the same media used during the training sessions. Provide complete training modules on stand-alone CD format.

Acceptance of the construction at a particular Government site shall be contingent upon the completion of the training program.

Provide an approved manufacturer certificate of course completion/competence to include all test scores.

Training deliverables include: Training Plan, Training Schedule, Training Manuals, and software.

D309090 OTHER SPECIAL MECHANICAL SYSTEMS

Not Applicable.

-- End of Section --

THIS PAGE HAS BEEN INTENTIONALLY LEFT BLANK

6. ENGINEERING SYSTEMS REQUIREMENTS

D40 FIRE PROTECTION

Refer to Part 4 Section D40 for performance requirements of the building elements included in the fire protection systems.

In addition to compliance with all applicable Unified Facilities Criteria, the Design-Build contractual documents shall conform to the base regulations and requirements as stipulated in Quantico Fire and Emergency Services Facility Design and Construction Requirements (Included in Part 6)

SYSTEM DESCRIPTION

Provide an integrated fire alarm and mass notification system and suppression system capable of notifying building occupants and controlling any fire that may start inside the facility.

GENERAL SYSTEM REQUIREMENTS

Provide working space around all equipment. Provide concrete pads under all equipment. Provide all required fittings, connections and accessories required for a complete and usable system. All equipment shall be installed per the criteria of PTS section D40 and the manufacturer’s recommendations. Where the word "should" is used in the manufacturer's recommendations, substitute the word "shall".

All Design Documents, (i.e. Building Code/Life Safety Analysis, plans, specifications, and calculations) developed for Section D40 shall be prepared by, or under the supervision of the design/build contractor's Qualified Fire Protection Engineer, the Fire Protection Designer of Record (FPDOR).

Installation drawings, shop drawings or working plans, calculations, other required pre-construction documentation and as-built drawings shall be prepared by, or under the direct supervision of a NICET engineering technician as specified below. NICET engineering technicians shall hold a current certification as an engineering technician in the field of Fire Protection Engineering Technology with minimum Level III certification in the appropriate subfield.

Provide training for the active systems as specified by Quantico Fire and Emergency Services Facility Design and Construction Requirements.

D4010 FIRE ALARM AND DETECTION SYSTEMS

Provide an integrated fire alarm, and mass notification system capable of notifying building occupants inside the facility. Provide a complete, electrically supervised, addressable intelligent, manual and automatic, annunciated fire alarm and detection system throughout the facility. The system shall be a voice evacuation type system and shall also serve as a mass notification system. These integrated systems shall be capable of notifying building occupants by means of tones, strobes, prerecorded and live voice announcements. The fire reporting portion of the system shall be compatible with the existing base fire reporting system. The fire alarm system shall include manual stations, system smoke detectors, duct smoke detectors, audio/visual alarms, King-Fisher fire alarm radio transmitter, and electrical supervision of all sprinkler system alarm and supervisory devices. A minimum 8-zone Radio Frequency (RF) transmitter will be required to report alarm, supervisory, and trouble signals to the Marine Corps Base Quantico Fire & Emergency Services. The RF transmitter shall be FM (factory mutual) listed and compatible for use with the existing Quantico Fire & Emergency RF Receiver/Console manufactured by King-Fisher Company.

Mass notification system shall follow UFC 4-021-01 except as modified herein.

Provide one of the following:

1. A Cooper Wheelock Safe Path SP-40 Series Autonomous Control Unit(ACU) or contracting officer's approved substitute with alarm, strobe, display and voice alerts to run the notification appliance circuits.

2. A Voice Evacuation Control Panel (VECP) that is equipped with the appropriate hardware and software to accept an exterior digital audio input (RS232/ Line level audio) from the SPA W AR Transceiver unit.

The fire alarm control panel shall be capable of handling a minimum of 500 individually identified sensors within the main control panel. Provide Class A Notification Appliance Circuits, Class A Signaling Line Circuits, and Class A Initiation Device Circuits. Provide back-up amplifiers for combination fire alarm/mass notification systems.

Manual pull stations shall be double action, nonbreak glass type, semi-flush and require the use of a key to reset.

Provide a remote annunciator and Mass Notification LOC located in a vestibule.

LED signs are not required as part of the mass notification system.

D4020 FIRE SUPPRESSION WATER SUPPLY AND EQUIPMENT

Base hydraulic calculations on a static pressure of 82 psig (gauge) (565kPa) with 990 gpm (3748 L/m) available at a residual pressure of 58 psig (gauge) (400 kPa) at the junction with the water distribution piping system. Gage hydrant elevation was recorded as El 13', First Floor El 61', Attic Ceiling El 121'

The incoming sprinkler service shall be provided with a horizontal double check backflow preventer. In line strainer shall not be permitted/required.

Provide a wall-mounted fire department connection outside the sprinkler riser room 211 and a remote fire department connection on the south side of the building in accordance with the Civil site drwgs. Provide on the north wall of room 211 an exterior wall mounted fire test connection for the full flow testing of the installed backflow assembly.

Provide "Knox" locking caps for all fire department connections.

A supervised Wall Indication Valve (WIV) is required at room 211; a PIV is not acceptable unless approved by the Contracting Officer. WIV shall be monitored by the fire alarm system per approved exception to UFC 3-600-01, have locking ability to secure, and have a window to read "open" or "shut". WIV tamper switch shall be mounted "right-side up" to help prevent water from entering the device.

D4030 STANDPIPE SYSTEMS

Provide fire department hose connections attached to the wet-pipe system in entrances, stairway landings, and in corridors with spacing between hose valves not to exceed 150 feet. Installation requirements shall be in accordance with NFPA 14. Standpipe piping shall be sized to accommodate four stairway risers for a manual wet standpipe system.

D4040 SPRINKLER SYSTEMS

Provide wet pipe automatic sprinkler protection to provide complete coverage throughout.

Building areas are anticipated to be “Hazard Classification 1” in accordance with UFC-3-600-01 (Change 3, dated 1 March 2013) and FM Global Loss Prevention Data Sheet 3-26. Accordingly, the sprinkler rate of application shall be 0.10 gpm/ft^2 (4.1 L/min/m^2), over an area of 1500 ft^2 (140 m^2) with hose stream allowance of 250 gpm (1950 L/min). Storage areas within building are limited to fixed shelving not exceeding 8 ft in height and 24 inches in depth, and shall be protected in accordance with “Hazard Classification 1” criteria. Attic mechanical room shall be protected in accordance with “Hazard Classification 2” for the sprinkler rate of 0.20 gpm/ft^2 (8.2 L/min/m^2), over the room area. Mechanical room on the first floor (boiler room) and elevator equipment room/machine room shall be protected in accordance with “Hazard Classification 3” criteria in accordance with UFC-3-600-01 Appendix B. The use of large orifice sprinklers within the attic area shall be utilized to maintain a 7 psi minimum start pressure for the area of application. Gridded/looped piping systems shall be utilized throughout the building in order to provide adequate sprinkler coverage without the introduction of a fire pump into the project scope.

Provide quick-response concealed sprinklers with ordinary temperature rating in areas with finished ceilings. Provide cover plates to match ceiling color.

Provide corrosion resistant sprinklers where system is subject to wet conditions.

D4090 OTHER FIRE PROTECTION SYSTEMS

Provide KNOX boxes. Exact size and location for installation and ordering shall be coordinated with Quantico Fire and Emergency Services.

Provide early warning detection with a minimum of three distinct alarm levels in accordance with NFPA 75 and UFC 3-600-01 for Electronic Equipment Installations. Also included within these requirements but not limited to: smoke damper installation, HVAC system isolation, sprinkler system isolation, emergency power shutdown upon water flow, plenum rated cabling throughout all above ceiling and below floor areas not in conduit.

Elevator shall be protected in accordance with UFC 3-600-01 requirements based upon type of elevator installed.

--End of Section--

THIS PAGE HAS BEEN INTENTIONALLY LEFT BLANK

6. ENGINEERING SYSTEMS REQUIREMENTS

D50 ELECTRICAL

SYSTEM DESCRIPTION

Provide an interior electrical system consisting of Service Entrance Wiring and Equipment, Distribution and Lighting Panelboards, Dry Type Transformers, Conduits, Feeder and Branch Circuits, Motor Control Equipment, Lighting and Branch Wiring, Communications, Security and Alarm Systems, Emergency Lighting and Power, Grounding, Lightning Protection, including accessories and devices as necessary and required for a complete and usable system. This section covers installations out to the building 5 foot (1.5 meter) line.

GENERAL SYSTEM REQUIREMENTS

Provide an Electrical System complete in place, tested and approved, as specified throughout this RFP, as needed for a complete, usable and proper installation. Equipment shall be installed per the criteria of PTS Section D50 and the manufacturer's recommendations. Where the word "should" is used in the manufacturer's recommendations, substitute the word "shall".

Where codes, references, and standards are cited herein, the latest version shall be used.

D5010 ELECTRICAL SERVICE AND DISTRIBUTION

D501001 MAIN TRANSFORMERS

Main transformer(s) are defined in Section G40, *Site Electrical Utilities*.

D501002 SERVICE ENTRANCE EQUIPMENT

Service into the facility shall be underground.

Provide a 480Y/277V, 3Ø, 4W switchboard as service equipment. Provide each switchboard with digital metering.

Arrange service entrance equipment and underground service entrance ducts such that water does not drain into the building.

D501003 INTERIOR DISTRIBUTION TRANSFORMERS

Provide 480 – 208Y/120V, 3Ø, 4W dry type transformers to step down secondary voltages for general purpose outlets and other low voltage equipment.

D501004 PANELBOARDS

Provide distribution and branch circuit panelboards to serve loads as required.

D501005 ENCLOSED CIRCUIT BREAKERS

Provide enclosed circuit breakers for equipment as necessary.

D501006 MOTOR CONTROL CENTERS

Provide motor control centers, individual motor starters with disconnect switches, combination motor starters, variable speed drives, reduced voltage controllers, manual motor starters for motor controls as required by mechanical equipment. Provide all circuits and connections for motors.

Motor starters shall be combination type with a fused disconnect or a motor circuit protector. Three-phase motor starters shall have integral single-phase protection against loss of any phase voltage. Pilot devices in three-phase motor starters shall be as follows: Red - running pilot light; Green – power available pilot light; hand-off-automatic (HOA) switch. Provide control power transformer (CPT) with two primary and one secondary fuse, with secondary voltage of 120 volts, and provide two normally open (NO) and two normally closed (NC) auxiliary contacts with the capability of installing additional contacts. Provide a mechanical override to open the starter enclosure while the unit is energized.

Perform the following minimum tests:

- Visual and mechanical inspection
- Insulation resistance
- Overload Bus

D501090 OTHER SERVICE AND DISTRIBUTION

Provide surge protective devices (SPD) at the following locations: service entrance, distribution panelboards and panelboards serving ESS Systems (as defined in D503005), and A/V equipment including, but not limited to, VTC systems, projectors and television.

SPD devices shall have 10 modes of protection, must be listed by Underwriters Laboratories UL 1449 (3rd Edition), and shall be in compliance with UFC 3-520-01.

Provide SPD sizes as follows:

Service Entrance: 200 kA per mode

Distribution Panelboards: 100 kA per mode

ESS/AV Panels: 100 kA per mode

D5020 LIGHTING AND BRANCH WIRING

Provide electrical connections for systems and equipment requiring electrical service.

Provide lighting and general purpose receptacles throughout spaces as required.

Provide dedicated circuits and connections for special equipment.

Provide dedicated electrical outlet power connections to all telecommunications equipment in the Telecommunications Rooms, the VTC equipment in the Conference Rooms, A/V equipment, CCTV equipment, and IDS/Security/Alarm equipment. The exact location of the electrical outlets/connections shall be verified with the suppliers.

Elevator design shall be in accordance with NAVFAC elevator design guide and ASME A17.1.

D502001 BRANCH WIRING

Include 25% spare capacity for loads in feeder and branch circuit voltage drop calculations.

Conductors shall be copper THHN/THWN-2 insulated. Rigid steel conduit (RGS), intermediate metal conduit (IMT), and electric metallic conduit (EMT) shall be used for interior dry applications. RGS or IMC shall be used in damp locations. Schedule 40 PVC may be used in exterior direct buried applications up to 1-1/2 inch. Underground exterior conduit 2 inch and greater shall be type EB conduit encased in a minimum of 3 inches of minimum 3000 psi concrete, unless otherwise indicated on ES101 or ES102 (included in Part 6 of the RFP). Minimum size conduit shall be ¾ inch. No conduit shall be installed in on-grade or above-grade slabs. No conduit shall be installed below slabs on-grade except incoming or outgoing circuits. Conduits shall be concealed in finished walls and above dropped ceilings.

Branch wiring shall be individually insulated copper conductors in conduit. MC cable is not allowed.

Provide 200% rated neutral conductors for branch circuits serving A/V equipment and systems furniture.

Provide severe duty, GFI, weatherproof, while-in-use receptacle on roof, at mechanical equipment, per NEC, and every 75 feet on building exterior with a minimum of one per wall. Provide a minimum of one on each exterior wall.

Dedicated circuits shall be provided to the equipment indicated in the Facility Program Document and to the following equipment: refrigerators, copiers, equipment requiring an outlet rating of 20 amps or above, motors, microwaves, coffee makers.

Corridor receptacles shall be on separate, dedicated branch circuits for corridor receptacles only.

Limit loads to a maximum of three (3) workstations per 20A circuit.

Office receptacles intended to serve computers shall be on a separate branch circuit from the general purpose receptacles within offices.

Where systems furniture is utilized, provide branch circuit, make final connections to the system furniture infeed whip, and adjust the length of the whip to suit the field conditions and as directed by the system furniture supplier/installer. The system furniture infeed whip shall be furnished as part of the system furniture. System furniture shall be pre-wired and provided with electrical devices. Provide outlet box with a cover plate with 2” bushed opening located adjacent to systems furniture to make connection to whip. Provide a flush floor-mounted outlet box for base feed connections. Coordinate location and connection requirements with furniture contractor prior to rough-in. Refer to Part 6, Attachments. Workstation Typical for systems furniture requirements.

Receptacle locations shall be coordinated with furniture and equipment layout in each space so that each workstation and piece of equipment is provided with the appropriate receptacles.

Power Distribution Box

The power distribution box shall be part of a factory assembled modular branch circuit wiring system consisting of a multi-circuit power distribution box, and flexible branch circuit extender conduit serving under floor double duplex receptacles as indicated in the room requirement sheets. They shall be UL 183 and UL 1286 as Manufactured Wiring System complying with NFPA 70, NEC Article 604.

The box shall be constructed of 16 gauge galvanized steel, with cover, and four internal deck support posts specifically designed for installation in an access floor system. The box shall have a

combination of 1/2 inch or 3/4 inch conduit knockouts as required by cabling layout. Provide termination block strips with the number of terminals as required. There shall be two circuit flexible conduit whips terminated in the box at the wiring terminal blocks and at the end of the whip terminated in a female pin and socket connector. The wiring in the whip shall consist of 4 # 12 conductors, (dedicated neutrals,) and 1 # 12 ground.

The under floor double duplex receptacles associated with the zone distribution boxes shall consist of two duplex receptacles each fed from a separate circuit and collocated in a flush-mounted floor box with A/V and telecommunications devices. It shall be provided with a 20 foot flexible branch circuit extender conduit with 4 #12 conductors, (dedicated neutrals,) and 1 #12 ground and terminated in the outlet box on the receptacles and at the other end of the flexible conduit with a pin and socket connector to mate with the whips provided. Coordinate requirements with telecommunications and A/V sections of this RFP.

D502002 LIGHTING EQUIPMENT

Provide a complete lighting system including exit, egress and emergency egress lighting and switches and automatic controls including occupancy sensors, automatic lighting shutoff systems, and dimming systems, primarily consisting of energy efficient fluorescent lamps with electronic ballasts. Compact fluorescent lamps shall be utilized for accent lighting.

Provide dual technology occupancy sensors to control lighting in restrooms, storage closets, and janitor closets.

Provide “Attic Stock” of the following lighting equipment based on the total quantity of lighting equipment installed. 5% of each lamp type (Interior and Exterior) 2% of each light fixture type (Interior and Exterior) 5% of each light fixture lens.

Provide exterior wall mounted full cut-off lighting fixtures at all building entry/exit doors and for safety and security lighting around building perimeter. Exterior building mounted lighting shall be LED, per base standard. Connect to exterior lighting control system as indicated in Section G402001 Exterior Lighting Fixtures and Controls.

Lighting fixtures in restrooms shall be corrosion-resistant and UL damp label.

Lighting systems shall be designed in compliance with ASHRAE/IESNA Standard 90.1. Where task light is used, the foot candle requirements indicated shall be achieved independent of the task lighting.

Linear fluorescent lamps shall be F32T8, 3100 initial lumens (minimum), 3500 K color temperature with a minimum CRI of 82. Egress lighting shall be in accordance with NFPA 101.

D5030 COMMUNICATIONS AND SECURITY

The Room Requirements Section identifies locations for communications and security systems and equipment, unless noted otherwise in the following sub-elements.

D503001 TELECOMMUNICATIONS SYSTEMS

General Scope of Work:

Provide a complete telecommunications system to include telecommunications backbone and horizontal cabling, conduit pathways, cable tray, outlets, cabinets, racks, patch panels, telecommunications room build out, and miscellaneous support equipment required in accordance

with this RFP. The Government will install final cross-connections between IDC terminal blocks and shall install patch cords for voice and data circuits. Installation shall comply with Category 6 standards as notated in the ANSI/TIA/EIA-568-C series standards. The T568B wiring standard shall be used for pin/pair assignments and telecommunications terminations.

Requirements:

The Contractor/subcontractor manager designing the backbone, horizontal and campus telecommunications cabling infrastructure shall be a certified BICSI RCDD.

The Contractor/subcontractor manager performing backbone, horizontal and campus telecommunications cabling infrastructure shall be a certified BICSI Level 2 installer.

The Contractor/subcontractor performing backbone, horizontal and campus telecommunications cabling testing shall be a certified BICSI Technician

General Requirements:

The administrative requirements of the telecommunications system shall be accomplished in accordance with ANSI/TIA/EIA-606-A standard and shall include the layout of outside plant cabling and associated underground conduits and ductbank. Cable run sheets, block diagrams, and riser diagrams shall be provided to the Contracting Officer's Representative in either a spreadsheet format, as part of as-built drawings, or as an appendix to other reports.

Equipment racks and cabinets shall meet the requirements of ANSI/EIA/TIA-310D. Equipment racks shall be 4 post 84" high with 19" mounting rails and vertical cable management each side. Racks in data rooms shall be 30" deep and 36" deep in control room. Provide four feet minimum clearance space at the front, and three feet minimum clearance space at the back and on non-joined sides of telecommunications and electronic equipment racks.

Horizontally mounted power strips shall be provided in the back of racks and cabinets. Power strips shall be rated 20A and equipped with (12) outlets and computer grade surge protection.

Vertical and horizontal cable management hardware shall be provided to facilitate routing of cable both in front and back of racks and cabinets. Provide minimum 10" wide cable managers in between racks and 6" wide on the ends (Assume 2 racks).

Server room equipment shall be housed in welded four post frame cabinets equipped with perforated front and rear access doors. Cabinets shall be 24" wide x 36" deep suitable for 19" rack mounted equipment. Side panels shall be vented and the top panel shall be equipped with 550CFM cooling fans. Server room cabinets shall have a "U" height of 52.

Provide and terminate copper telecommunications cabling and fiber optic cabling in accordance with TIA/EIA-568.

Provide Category 6 patch panels, fiber optic patch panels, patch cords, equipment racks and other equipment and cabling required unless otherwise specified. Provide spare patch panels of sufficient quantity to terminate 25% additional cables without the need for additional panels. No spare patch cords are required. Please note this is an approved variance from the UFC requirements.

Cabling and equipment shall be installed to conform to the requirements of ANSI/TIA/EIA-569-C, J-STD-607-A, and NFPA standards.

Telecommunications spaces (entrance facility, equipment rooms, telecommunications closets and pathways) shall be built to conform to the requirements of ANSI/TIA/EIA-569. Server room shall be

constructed in accordance with TIA-942.

Conduit runs whether empty or utilized, shall have nylon pull tape installed. Pull tape shall have footage markings and a 200-pound minimum pull strength. Pull tape shall be secured at each end of the conduit.

Backbone cable shall be installed in cable tray or 4" conduit. Cable trays shall be sized to accommodate telecommunication and A/V systems and provide 20% spare capacity.

Install plywood back boards on all walls of each telecommunications space. The back board wall covering shall extend the full width of each wall surface and be fabricated from sheets of 4' by 8' x ¾" thick exterior grade "A/C" plywood with the "A" side exposed. The plywood panels shall be mounted vertically with the bottom 6" off the floor. Plan the installation to maximize the use of full-width panels. The exposed plywood surfaces, including edges, shall be painted with a minimum of two coats of a light colored fire-retardant paint or, need not be painted if clearly stamped, pre-treated, fire-retardant panels are used.

Required Networks:

- One Unclassified Admin (NMCI)
- Two Classified
- One Unclassified Voice

Network color-coding for connectors and cables shall be as follows:

- Voice 1: Ivory Classified SIPRNet: Red
- Classified AMN: Purple Admin 1: Orange

Telecommunications Work Area Outlet Requirements:

Unclassified Outlet: 4" square by 2-1/8" deep outlet box with a 4-port outlet faceplate that includes two RJ-45 connectors and two blanks. Provide 2 cables per outlet in 1"conduit to the cable tray or to the rack/cabinet.

Voice Outlet (Wall-mounted Telephone): 2" by 4" by 2-1/8" deep outlet box with a 1-port outlet faceplate that includes one RJ-45 connector and mounting brackets for telephone. Provide 1 cables per outlet 3/4 inch to the cable tray or to the rack/cabinet.

Classified Outlet: 4-11/16" square by 2-1/8" deep outlet box with a 4-port outlet faceplate that includes two RJ-45 connectors and two blanks. Provide 2 cables per outlet to classified server rack.

Telecommunications Space allocations and Usage:

Provide one Telecommunications Room (TR) on each of three floors. Telecommunications Rooms are also referred to as Data Rooms in this RFP. Telecommunications Room minimum dimensions shall be as indicated on floor plans included in Part 6. Telecommunications Rooms shall be vertically stacked where possible. Provide 4 - 4" for unclassified and 4 - 4" for classified spare 4" conduit sleeves between stacked telecommunications rooms.

First floor Telecommunications Room 111 shall be utilized as the OSP service entrance facility (EF) for both copper and the fiber service. Room 111 and shall house protected entrance terminals (PETs), the main cross-connect for copper backbone, the Admin Network (NMCI) cabinet, and the Main Telecommunications Main Ground Bus (TMGB). Fiber optic OSP cable shall be provided with a

maintenance loop and terminated on rack mounted cross-connect panels. Multi-mode and Singelmode fiber shall be terminated on separate panels. Admin Network (NMCI) cabinets and final connection to the main cross-connect shall be provided by the NMCI Contractor.

Telecommunications Infrastructure for Intrabuilding Backbone Cable:

Provide Category 3 Unshielded Twisted Pair (UTP) copper for backbone voice cabling. Terminate backbone cables at the Main Cross-connect and at Intermediate Cross-connects locations on backboard mounted 110 blocks.

Provide SM fiber optic cable for data backbone distribution. Unless otherwise specified, fiber optic cable shall be type OFNR except for applications where the NEC requires type OFNP or type OFCP. Fiber Optic cable shall be installed in innerduct. Terminate SM fiber on a separate patch panel located at the top of designated racks. Use fan out kits and terminate both ends using Simplex SC type connectors.

Copper Backbone Cabling -

- (1) 600 pair Category 3 cable from the Building 1999 to Telecommunication room (TR) 111. Pull cable into TR room in Building 1999 and provide adequate slack conductor length for connection by others to existing system.

- (1) 200 pair Category 3 cable from the Main Cross-connect to each Telecommunications room (TR) – Rooms 111, 224, and 337. Terminate cable on Intermediate Cross-connect - backboard mounted 110 blocks.

Fiber Backbone Cabling

- (1) 24 strand single mode 0S2 indoor/outdoor lose tube fiber optics cables from Building 1999 to Telecommunications room (TR) 111. Terminate cables on rack mounted panels. Pull cable into TR room in Building 1999 and provide adequate slack conductor length for connection by others to existing system.

- (1) 12 strand single mode fiber optic cable from the main cross-connect in TR 111 to each Telecommunications room (TR) – Rooms 111, 224, and 337. Terminate cables on rack mounted panels.

Typical Classroom:

Typical Classroom spaces shall be designed as standard lecture type classrooms. Flush floor boxes shall be provided for Instructor and Student workstation services. Student workstation floor boxes shall be equipped with work area outlets (classified and unclassified), and XLR microphone outlets. A pair of floor boxes (one classified and one unclassified) shall be located between every other workstation, providing service to (2) workstations. A pair of floor boxes shall be provided underneath the instructor's desk. The instructors floor box shall contain work area outlets (classified and unclassified), XLR microphone jacks, control system jacks, and (2) duplex electrical outlet. Coordinate floor box build-out with classroom A/V requirements.

Network cabling shall be run in cable tray below the raised access flooring.

Horizontal Cabling:

Horizontal cabling shall be CAT 6, plenum-rated, and shall conform to EIA/TIA 568.

Horizontal cable shall be installed in conduit or in dedicated cable tray. Minimum conduit size shall

be 1 inch. Conduits shall be terminated with insulated ground bushings. Where cable tray is not used, individual conduits shall be installed from the Telecommunications Room to each outlet. Wall penetrations shall be fire-stopped in accordance with ANSI/TIA/EIA-569-B.

Horizontal cable connections (voice and data) shall be terminated to Pin/Pair Assignment T568B in accordance with the TIA/EIA 568 and on Category 6 patch panels using 110-style back planes. Horizontal Cross-Connects shall be built to conform to the requirements of the ANSI/TIA/EIA-569B standard.

Telecommunications Work Area Outlet Requirements: Telecommunications outlets shall be quad type populated with RJ-45 voice and data jacks for systems described in the individual Room Requirement Sheets. Outlet boxes shall be double gang and at least 2-1/8” deep. Single gang, 2-1/8” deep boxes may be used for direct mounted wall phones.

Cable homeruns shall be routed to the closest Telecommunications Room on the same floor unless otherwise noted.

Furniture:

Where systems furniture is utilized, provide telecommunications devices in systems furniture utilizing knockouts provided. Provide cabling in raceway to systems furniture devices and make final connections. Utilize components of the systems furniture including integrated systems furniture raceways, tele/data poles, and combination-type tele/data poles for pulling wire to devices. Refer to Room Requirement Sheets for telecommunication device type and quantity. Coordinate location and connection requirements with furniture contractor.

Telecommunication outlet locations shall be coordinated with the furniture and equipment layout in each space so that each workstation and piece of equipment is provided with the appropriate outlets. Provide a minimum of one classified and one unclassified outlet in each system furniture workstation and in each private office with required black and red separation. Refer to NSTISSAM TEMPEST/2-95 for separation requirements. In addition, for spaces where system furniture is utilized, provide a minimum of two classified and unclassified outlets located on permanent walls to accommodate reconfiguration of space.

Testing:

Conduct tests on copper and fiber-optic cable in accordance with ANSI/TIA/EIA standards.

Submit a written test plan to the Contracting Officer at least 30 days prior to testing. The Government will review and comment on the test plan.

Notify the Contracting Officer, in writing, and at least 10 working days prior to testing and coordinate testing with the Contracting Officer’s representative to ensure that testing is observed by the Contracting Officer’s representative and/or designated personnel.

Test Telecommunications grounds.

Category 6 testing shall be for Basic Link and not Channel.

Submit hard and soft copies (MS Office 2007 compatible) of test results to the Contracting Officer.

D503001.1 TELECOMMUNICATIONS SYSTEMS

Additional Required Networks:

- one Unclassified Admin (NMCI)
- two Classified
- one Unclassified Voice

Network color-coding for connectors and cables shall be as follows:

- Voice 2: Gray Classified Centrix P: Another color to be coordinated with user.
- Admin 2: Black Classified Centrix R: Another color to be coordinated with user.

Telecommunications Work Area Outlet Requirements (includes requirements of 503001):

Unclassified Outlet: 4” square by 2-1/8” deep outlet box with a 4-port outlet faceplate that includes four RJ-45 connectors. Provide 4 cables per outlet in 1”conduit to the cable tray or to the rack/cabinet.

Voice Outlet (Wall-mounted Telephone): 2” by 4” by 2-1/8” deep outlet box with a 1-port outlet faceplate that includes one RJ-45 connector and mounting brackets for telephone. Provide 1 cables per outlet 3/4 inch to the cable tray or to the rack/cabinet.

Classified Outlet: 4-11/16” square by 2-1/8” deep outlet box with a 4-port outlet faceplate that includes four RJ-45 connectors. Provide 4 cables per outlet to classified server rack.

D503002 PUBLIC ADDRESS SYSTEMS

Not Applicable.

D503003 INTERCOMMUNICATIONS SYSTEMS

Not Applicable.

D503004 TELEVISION SYSTEMS

Provide infrastructure to support the A/V systems including, but not limited to, empty cable trays and conduits with pull strings, outlet and junction boxes, and associated power outlets to enable system installation by the A/V suppliers. Racks and cabinets are being provided under section 503001 in the shared control room that will be used for the A/V system as well as the IT system. CVIC will design and install the A/V systems. CVIC will provide racks in high A/V demand rooms such as classrooms that will require a direct pathway from the shared control room. Coordinate design with CVIC and SPAWARS and CCTV contractor.

CATV:

Provide a 2” underground conduit from the building 5’ line, stubbed up in the shared control room (320) for incoming cable television service cable. Provide a 2” conduit with weatherhead from the roof of the building, stubbed up in the shared control room (320) for incoming satellite service cable. A commercial CATV provider shall provide the incoming service cables and head end equipment in the shared control room, including amplifiers and splitters. Coordinate with commercial CATV provider to ensure CATV system is properly grounded and bonded to the building grounding system. Provide a 2” conduit from the shared control room (320) to the MCMOS servers in TR (111). Terminate conduits with plastic bushing.

IPTV:

A/V signals shall be distributed throughout the building over the telecommunications networks. Below is a description of each symbol on the A/V drawings and contractor's requirements for each device. Refer to A/V drawings included as an appendix in Part 6 of this RFP for device locations.

TV: Display outlet (IPTV). Provide one 4" square by 2-1/8" deep outlet box and provide one 1-1/4" conduit with pull wire outlet to the nearest A/V rack, A/V closet, or TR Room. Provide one double duplex 120V, 20A receptacle. Provide blocking for display. Terminate conduits with plastic bushing. Coordinate mounting location with equipment provider.

AV: A/V Touch Panel Control. Provide one 4" square by 2-1/8" deep outlet box at device. Provide one 1-1/4" conduit with pull string to nearest A/V rack, A/V closet, or TR Room. Terminate conduit at one 4" square by 2-1/8" deep outlet box located at A/V rack. Terminate conduits with plastic bushing.

CCTV: CCTV outlet. Provide one 4" square by 2-1/8" deep outlet box and one 1 1/4" conduit with pull wire to the nearest A/V closet or TR Room. Terminate conduits with plastic bushing.

S: Speaker: Provide one 4" square by 2-1/8" deep outlet box at device. Provide one 1-1/4" conduit with pull string to VTC rack in room. Terminate conduit at one 4" square by 2-1/8" deep outlet box with blank cover plate located at VTC rack in room. Terminate conduits with plastic bushing. Outlet box at device is not required where installed on ACT ceiling.

M: Microphone: Provide one 4" square by 2-1/8" deep outlet box at device. Provide one 1-1/4" conduit with pull string to VTC rack in room. Terminate conduit at one 4" square by 2-1/8" deep outlet box located at VTC rack in room. Terminate conduits with plastic bushing. Outlet box at device is not required where installed on ACT ceiling.

VTC Camera: Provide one 4" square by 2-1/8" deep outlet box at device. Provide one 1-1/4" conduit with pull string to VTC rack in room. Terminate conduit at one 4" square by 2-1/8" deep outlet box located at VTC rack in room. Terminate conduits with plastic bushing.

GUEST: An A/V outlet with HDMI, VGA and 3.5mm inputs. Provide one 4" square by 2-1/8" deep outlet box. Provide one 1-1/4" conduit with pull wire to the nearest A/V rack, A/V closet, or TR Room. Terminate conduits with plastic bushing.

DAMC: Digital audio mixer, control system. Headend A/V equipment provided by A/V contractor outside of this contract.

Provide two (2) 120V, 20A duplex receptacles, each on a dedicated circuit, at each A/V and VTC rack.

Telecommunications outlets for A/V components may be combined.

CATV and IPTV outlet locations shall be coordinated with the A/V equipment layout in each space so that each piece of equipment is provided with the appropriate outlets.

D503005 SECURITY SYSTEMS

An Electronic Security System (ESS) is the integrated electronic system that encompasses one or more of the following subsystems; access control system (ACS), intrusion detection system (IDS), and a local closed circuit television (CCTV) systems for assessment of alarm conditions.

The ESS for this project shall meet requirements of UFC 4-021-02NF, Security Engineering Electronic Security Systems and consist of an ACS, an IDS, and a CCTV system.

Provide infrastructure to support the ESS including but not limited to empty raceways with pull strings, outlet and junction boxes, cover plates, equipment racks and cabinets, and associated power outlets to enable system installation by the ESS suppliers. Refer to D503001 for rack and cabinet requirements.

The ESS suppliers will design and install the ESS systems. The ESS supplier for the IDS and ACS components of the ESS is SPAWARS. The ESS supplier for the CCTV shall be a separate contractor hired by the user. Coordinate design with SPAWARS and CCTV contractor.

Provide all floor plans and electrical drawings including infrastructure conduit drawings in the latest AutoCAD format to the Government at the first review. These drawings will be marked up to include the necessary conduit and junction box infrastructure to support the ESS. SPAWAR, the government's Security (ESS) Sub-Contractor will develop a separate Installation and Design Package (IDP) for the ESS. The Government will review the drawings to ensure the infrastructure conduit will meet the requirements to support the security equipment that is to be installed through SPAWAR. The General Contractor shall provide the infrastructure for a complete security and access control system as marked up during the review.

SPAWAR shall be allowed access to the site during construction to ensure conduit/junction boxes are placed in the proper location for ESS device installation. The acceptance of the security system infrastructure including the conduit, door strikes, and associated junction boxes shall be scheduled prior to closing the walls so that if they are not in the proper location they can be moved. The General Contractor and SPAWAR must be in constant communications so that the ESS can be completed prior to facility BOD. Similar provisions shall be planned to coordinate installation with CCTV contractor.

Design open secret storage spaces in accordance with SECNAV M-5510.36 Department of Navy

Information Security Program. Open secret storage spaces shall be as identified in the floor plans in part six of this RFP.

Refer to Security Drawings in the appendix of this RFP for security device locations by room.

Each security device location will need:

1. 2" x 4" x 2-1/8" deep outlet box (1 for Card Swipe, 1 for Keypad)

2. Each door with devices requires 2" x 4" x 2-1/8" deep outlet box with conduit above each door.

3. 2" conduit from every location on each floor terminating back in the telecommunication room. Fiber is used for devices and can be ran in parallel with each other back to telecommunications room.

D503090 OTHER COMMUNICATIONS AND ALARM SYSTEMS

D5090 OTHER ELECTRICAL SERVICES

D509001 GENERAL CONSTRUCTION ITEMS (ELECTRICAL)

Provide General Construction Items (Electrical) including, but not necessarily limited to, all connections, fittings, boxes and associated equipment needed by this and other sections of this RFP as required for a complete and usable system.

Conduits, cable trays and busways that penetrate fire-rated walls, fire-rated partitions, or fire-rated

floors shall be firestopped in accordance with Section C10, Interior Construction.

Raceways for the electrical, fire alarm, telecommunications, A/V, and ESS systems shall be concealed above ceilings, below access flooring, and within walls in the finished areas.

D509002 EMERGENCY LIGHTING AND POWER

Exit and emergency lighting shall be in accordance with NFPA 70, UFC 3-501-01 Electrical Engineering and NFPA 101 and shall utilize integral self-testing NiCad battery backup.

Exterior emergency lighting fixtures shall be vandal resistant type.

Provide power and wiring for emergency lights and exit lights throughout the facility.

Provide lighting fixtures in bathrooms and utility rooms including but not limited to electrical, mechanical, telecommunications, server, and fire protection rooms with integral self-testing NiCad battery backup to provide a minimum foot candle level of 0.1 at a minimum 10:1 max:min uniformity.

Elevator lighting shall be in accordance with ASME A17.1 Safety Code for Elevators and Escalators.

Provide share power plug-in receptacle for portable generator to serve COC training tents(s).

D509003 GROUNDING SYSTEMS

Provide a complete grounding system for the facility electrical and telecommunications systems. The grounding shall comply with NFPA 70, NFPA 780, and applicable UFCs, as a minimum design standard. Reference MIL-HDBK-419A for informational purposes.

Specific items that will be provided include:

- A separate equipment ground conductor shall be provided for feeder and branch circuits. Conduit shall not be used for the purpose of grounding.

- An external ground bus shall be provided in the electrical rooms. The ground bus shall be bonded to the building ground system. Electrical equipment in each room shall be bonded to the ground bus.

- Provide a telecommunications main ground bus bar (TMGB) located in the main telecommunications room. Provide a telecommunications ground bar (TGB) located in telecommunications closets and other communications spaces. The TMGB shall be connected to the electrical system only at the service entrance. Install the telecommunications grounding and bonding system per ANSI/TIA/EIA J-STD 607. Provide #3/0 bare copper, minimum telecommunications bonding backbone (TBB).

- Provide a minimum #4/0 bare stranded copper counterpoise with minimum 10 foot ground rods at each building corner and as needed to not exceed 50 foot spacing.

The maximum allowable resistance-to-ground for grounding systems shall be limited to 5 ohms, under dry conditions.

Where raised access flooring is used, ground flooring in accordance with NEC Article 645 to ground bus of the nearest panelboard serving that space. Make ground connections to pedestals a minimum of every 1000ft² and a minimum of two points in each space and in accordance with raised access flooring manufacturer's recommendations.

D509004 LIGHTNING PROTECTION

Provide a complete lightning protection system with a UL Lightning Protection Inspection Certificate certified to UL 96A, including, but not necessarily limited to, strike termination devices, conductors, ground terminals, interconnecting conductors, surge suppression devices, and other connectors and fittings required for a complete and usable system.

Lightning Protection System shall not void the roof warranty.

The lightning protection system shall be in compliance with the specifications and standards of the most current editions of the National Fire Protection Association's Lightning Protection Code NFPA 780 and Underwriters Laboratories Lightning Protection Code UL 96A. The system shall be installed by a lightning protection contractor who is listed by Underwriters Laboratories, Inc. All lightning protection materials and components shall comply with weight, size and composition with UL 96A and NFPA 780 lightning protection material code requirements for this type of structure. All materials shall be copper, except aluminum components shall be used in locations where system components are mounted to aluminum surfaces to avoid galvanic corrosion of dissimilar metals. Air terminations and conductors shall be copper.

D509005 ELECTRIC HEATING

Provide power wiring and connections as required for all electric heating systems, heat tracing, and equipment.

D509006 ENERGY MANAGEMENT CONTROL SYSTEM

The electrical meter shall collect data from the gas and water meter. Connections shall be made to the gas and water meter via single-mode fiber optic cabling. The meter must comply with the MCBQ Advanced Metering Infrastructure requirements. A rack-mounted, 24-port government approved network device shall be provided in the 1st floor NMCI telecommunications room. Provide connection between the electrical meter and the network device with single-mode fiber optic cabling. The connection from the network device to the telecommunications system shall be GFGI. Contact the Base Energy Management Department for meter and network device specifications. Meter shall be configured to manufacturer's recommended initial settings.

The meter shall meet the requirements specified in the Unified Facilities Guide Specifications Division 26 - Electrical CS 26 27 13.10 30 Electric Meters.

The meter shall be connected to and programmed to communicate with the MCBQ Advanced Metering Infrastructure (AMI) system. The data shall be transferred through the Marine Regional Area Network (MRAN)/GPON solution and the interconnection shall be made using single mode fiber optic cabling. This solution shall be reviewed by G-6 and coordinated through the contracting office.

Conduct any site surveys that are required for meter interconnection to the existing MRAN/GPON infrastructure. The contractor shall submit the site survey and interconnection design to the government for review. Equipment must be compatible with the existing infrastructure and shall be subject to government approval.

Provide equipment (including network devices and interconnect cables) and labor to install and interconnect the meter to the AMI. The contractor shall also provide and install an approved Cisco device on the network. Cisco switch shall have at minimum 24-parts with at least 4 SFP single mode fiber parts and be fanned cooled, must also include mounting brackets for the new rack.

Once the system is installed, G6 shall configure the network devices to conform to the certification and accreditation requirements. G6 shall assist with the accreditation of the metering system.

Network equipment shall become the property of the base G6 after the one year maintenance period.

The meter, and its communication with the AMI, shall be tested and commissioned prior to project closeout.

Provide branch circuits and connections as required for EMCS and DDC systems and equipment. Coordinate connection requirements with switchboard kWH metering.

D509007 BUILDING PHOTOVOLTAIC SYSTEM

Not Applicable.

D509090 OTHER SPECIAL SYSTEMS AND DEVICES

Provide 2” conduit from roof to shared control room (320) to facilitate installation of GPS satellite.

--End of Section--

6. ENGINEERING SYSTEMS REQUIREMENTS

E10 EQUIPMENT

GENERAL SYSTEMS REQUIREMENTS

E1010 COMMERCIAL EQUIPMENT

E101003 VENDING EQUIPMENT

Not Applicable.

E101005 SECURITY AND VAULT EQUIPMENT

Not Applicable.

E102003 LABORATORY EQUIPMENT

Not Applicable.

E102009 AUDIOVISUAL EQUIPMENT

Under the construction contract, the general contractor shall be responsible for coordinating design requirements with the end user/Command IT personnel/Combat Visual Information Center (CVIC). CVIC will provide all AV equipment specifications, and procurement and installation of the Audiovisual (AV) equipment, using NETWARCOM's Best Value practices. It is mandated that CVIC is the Program Manager for all AV requirements in MILCON projects. The General Contractor is responsible to coordinate with CVIC and to provide infrastructure to support the AV equipment and design. A conceptual design is included in the appendices and described in section D50. Infrastructure to be provided, includes but is not limited to, blocking, empty raceways with pull strings, outlet boxes, cable tray, racks, cover plates and associated power outlets to enable system installation by CVIC.

AV equipment will not be funded as part of the FF&E Package. The occasional flat screen for "TV" purposes for lounges, BQs, etc. can remain in FF&E funding.

E1030 VEHICULAR EQUIPMENT

Not Applicable.

.

E1040 GOVERNMENT FURNISHED EQUIPMENT

Not Applicable.

E1090 OTHER EQUIPMENT

E109002 FOOD SERVICE EQUIPMENT

Not Applicable.

--End of Section--

6. ENGINEERING SYSTEMS REQUIREMENTS

E20 FURNISHINGS

SYSTEM DESCRIPTION

Furnishings shall include fixed furnishings as part of the Structural Interior Design (SID) and the design and documentation of the movable furnishings, the Furniture, Fixtures, and Equipment (FF&E) Package.

The design and documentation of both shall be funded as part of the construction contract. The purchase and installation of the FF&E Package shall be funded separately as part of Collateral Equipment.

The movable furniture and furnishings (FF&E) for this facility may include, but are not limited to movable furniture systems, freestanding furniture, artwork, appliances, flat screen TVs (not connected to data), accessories, specialty equipment (specified by the Activity) and other miscellaneous items to support facility functions.

FF&E is estimated in the following amount: $2,600,000.00. This estimate does not include the Contractor's Handling and Administration Rate (HAR).

Fixed furnishings (items that are fixed to the structure), such as specialty equipment, lockers, security cameras, motorized projection screens, blinds/shades are part of the construction contract and designated as SID.

Refer to Part 3 Section E10 of this RFP for Audio Visual (AV) Equipment. AV equipment will not be designed or funded as part of the FF&E package..

GENERAL SYSTEMS REQUIREMENTS

Design and provide fixed and movable furnishings for all areas as developed during Activity programming and as indicated in the Room Requirements (refer to Part 3 Section 5 of this RFP). Design a complete FF&E package and prepare supporting plans and procurement data. FF&E items identified in this RFP are to be used as a guideline to assist in establishing the minimum facility requirements and do not relieve the Contractor's Interior Designer from developing a complete design package that incorporates ALL of the Activities FF&E requirements. Design per UFC guidelines and in conjunction with UFC 03-120-10, Interior Design.

The Contractor shall have an Interior Designer with a minimum of one of the following credentials: National Council for Interior Design Qualification (NCIDQ) certification, or state and/or jurisdiction Interior Design Certification, Registration, or License. This Interior Designer must prepare both the SID and the FF&E Package and participate in all design charrettes and review meetings to develop the building design and floor plan. When specialty equipment is required in the project, the Contractor shall obtain services of equipment specialists to specify the specialty equipment. The Contractor's Interior Designer and any Specialists shall not have any affiliation with the products specified. The NAVFAC Interior Designer reserves the right to approve/disapprove the qualifications of the Contractor's Interior Designer.

All fixed and movable furnishings selections shall be closely coordinated with Parts 3 and 4 Section C10, Interior Construction, and with Sections C30 and E10 of this RFP. The FF&E package shall be fully integrated with the building systems and finishes.

The Contractor's Interior Designer shall be responsible for designing and providing specifications for procurement of all FF&E, to include delivery and installation, for the facilities built under this contract as directed by the NAVFAC Interior Designer. FF&E specifications shall be based on NAVSUP Blanket Purchase Agreements (BPA's), GSA schedules, and other Federal contracts and complying with priorities found in FAR Part 8.404. A list of current BPA contract holders will be provided at the FF&E Requirements Meeting

The FF&E package shall be fully integrated into the design and construction schedule for the building.

INTERIOR DESIGN SUBMITTAL AND MEETING REQUIREMENTS

STRUCTURAL INTERIOR DESIGN (SID)

The SID submittal process shall begin following the award of the RFP. The SID submittal shall include Interior Design programming documents, FF&E Floor Plans, and exterior & interior finish/color and material sample boards. Refer to this RFP Part 4 Section Z10 General Performance Technical Specifications and Part 2 UFGS Section 01 33 10.05 20, Design Submittal Procedures.

Provide the following SID meetings and submittals;

a. Concept Design Workshop (CDW) (10%-15%) or Initial Design Meeting: The Contractor's Interior Designer shall meet with the Activity and Base Property for Marine Corps projects to develop the Interior Design SID programming documents, which will include a preliminary Furniture and Equipment Plan and the FF&E Summary List. The Contractor's Interior Designer shall provide in-depth room by room interviews to confirm Activity requirements for the new facility(s). These interviews shall occur at the Activity's current location, if possible, to include building walk-thru(s). Minutes of this meeting shall be submitted to the NAVFAC Interior Designer within 7 days

b. Design Development (35%-50%) Submittal: The Contractor's Interior Designer shall provide a conceptual Finish Schedule, proposing finish materials to be used in all spaces. The Furniture and Equipment Plan and FF&E Summary List should be further developed and included in this submittal.

c. SID "Over the Shoulder" Review: Prior to the Prefinal (100%) Submittal, the Contractor's Interior Designer shall meet with the NAVFAC Interior Designer for an "over-the-shoulder" review meeting to present a minimum of (2) options for the interior building finishes/colors/materials. Finishes shall display manufacturer's label/specifications and be presented in a "loose" format for preliminary approval prior to the presentation with the Activity. The over-the-shoulder review meeting is to be held at NAVFAC Washington.

d. Prefinal (100%) Submittal: The Contractor's Interior shall present a minimum of two (2) NAVFAC-approved interior building finishes/color/material options, to the Activity for approval. Each of these two finish options shall be documented and submitted in a 16"x20" presentation board format to the NAVFAC Project Manager. In addition, the submittal shall include an updated Furniture and Equipment Plan, Finish Schedule, Floor Finish Plan, and Finish Legend for review and approval.

e. Final Submittal: The Contractor's Interior Designer shall incorporate the final approved Furniture and Equipment Plan, Finish Schedule, Floor Finish Plan and Finish Legend into the Contractor's final drawing set. These drawings and all approved finishes shall be submitted in 8-1/2" x 11" binder format, using heavy duty plastic sheet protectors. Three (3) sets of the Final SID Submittal shall be distributed to the NAVFAC Project Manager, FEAD/ROICC, and the Activity.

SID CONSTRUCTION SUBMITTALS

No substitutions shall be made to the SID finishes once they have been approved by NAVFAC during the design phase. In the event that revisions may be required due to unforeseen conditions such as discontinued product, such revisions must be submitted via the FEAD/ROICC for approval by the NAVFAC Interior Designer before substitutions can be made.

FIXTURES, FURNISHINGS AND EQUIPMENT (FF&E)

The FF&E process shall begin approximately with the 50% design submittal. The submittals shall include fixtures, furnishings, and equipment specifications in accordance with the Activity requirements to produce an optimally functional facility. FF&E are all items that are not fixed to the structure, but are fully integrated with the building systems and finishes. Refer to RFP Part 4 Section Z10 General Performance Technical Specification and Part 2 UFGS Section 01 33 1-.05 20, Design Submittal Procedures.

Develop design as described and in accordance with the Activity requirements. Include in the design all loose furnishings required to produce an optimum functional facility, consistent with quality commercial design. This project also includes the preparation of specific detailed information for each selected item. Each submittal shall demonstrate interaction thoroughly with the Activity requirements and complete coordination with the facility design and the SID. Three (3) submittals will be required; (1) each for the NAVFAC Project Manager, FEAD/ROICC, and the Activity.

For all projects, including fast track projects, the contractor shall be responsible for sufficiently scheduling all SID/FF&E submittals early enough to obtain the required government approvals, and meet all ordering and installation lead times to complete the project by the contract completion date.

These are minimum requirements and the Contractor shall be prepared to provide any/all additional meetings and submittals that may be necessary to support the Interior Design effort/FF&E coordination.

Provide the following FF&E meetings and submittals;

a. FF&E Requirements (Interior Design Orientation) Meeting: This meeting shall occur upon completion of Design Development (or approximately 50%), at NAVFAC Washington and prior to the development of the FF&E package. The NAVFAC Interior Designer will provide the Contractor's Interior Designer a sample format of the FF&E submittal, review the Best Value Determination (BVD) process, and discuss Blanket Purchase Agreement (BPAs), GSA or other mandatory sources to consider. Minutes of this meeting shall be submitted to the NAVFAC Interior Designer within 7 business days.

b. FF&E "Over the Shoulder" Review: Prior to the Preliminary FF&E Submittal the Contractor's Interior Designer shall meet with the NAVFAC Interior Designer for an "over-the-shoulder" review to present preliminary FF&E options. These can be presented in a "loose" format for preliminary approval prior to the Activity presentation. The "over-the-shoulder" review meeting is to be held at NAVFAC Washington.

c. FF&E Concept Presentation: The Contractor's Interior Designer shall present the NAVFAC approved preliminary FF&E package to the Activity for approval. This presentation shall include loose format samples and catalog cuts. Sample boards are not required.

d. Best Value Analysis (BVA), "Over the Shoulder Review": Prior to issuing the BVA, the Contractor's Interior Designer shall meet with the NAVFAC Interior Designer for an

"over-the-shoulder" review of the solicitation package. BVA Solicitation to include the following:

1. Copy of the BVA cover letter

2. BVA Solicitation form & Questionnaire

3. Technical Specification to establish minimum acceptable FF&E requirements

4. Room and/or Typicals

5. Furniture Plans with Legends (PDF format)

e. Preliminary BVA Submittal - The Contractor's Interior Designer shall submit one (1) copy of the Preliminary BVA package to the NAVFAC Interior Designer and one (1) copy to Base Property for Marine Corps projects. This submittal shall be in binder format and will include the following:

1. Cover Title Page (project name, project #, submittal date, submittal title)

2. Table of Contents

3. Point of Contact List

4. Narrative of Interior Designer Objectives

5. Copy of all information sent to bidders and documentation that all required sources were contacted.

6. BVA Spreadsheet

7. Solicitation Forms submitted by each bidder (cut sheets/highlighted pricing sheets/technical specifications, pricing, dealer and manufacturer qualification for each product showing that products meets all requirements.)

8. Response from UNICOR

f. Preliminary FF&E Submittal: The Preliminary FF&E submittal shall be due at Prefinal (100%). It shall be presented to the Activity and NAVFAC Interior Designer. Submit the following in a 3-ring binder (with the exception of the 16x20 color boards) for both Activity and NAVFAC Interior Designer review and approval:

1. Cover Title Page (project name, project #, submittal date, submittal title)

2. FF&E list (Cost Summary)

3. Furniture placement plans coded to the FF&E list and furnishings specifications

4. Specifications for furniture, furnishings, etc.

5. Catalog cuts and finish samples for all specified items

6. 16x20 inch color boards of furniture/furnishings and finishes specified for Activity presentation to indicate overall design intent

g. Final FF&E Submittal: The Contractor's Interior Designer shall submit the Final FF&E Package within 120 calendar days following the receipt of review comments on the preliminary FF&E submittal. The Final submittal shall incorporate the following:

1. Cover Title Page (project name, project #, submittal date, submittal title)

2. Table of Contents

3. Manufacturer Contact List

4. Procurement Data Sheets for each product indicating final finish and fabric selections

5. Copy of Final Quote on Letterhead from the vendor determined to be the Best Value.

6. Best Value Determination Guideline sheets (completed and signed by the Contactor's Interior Designer)

7. CD copy of the final FF&E binder.

8. Final Finish Selections and Memo Samples for the FF&E submitted in 8x10 binder format, using heavy-duty plastic sheet protectors

FF&E CONSTRUCTION SUBMITTALS

Submit any revisions or deviations caused by discontinued items to the Contracting Officer for approval by the NAVFAC Interior Designer.

SD-10 Operation and Maintenance Data

List Operation and Maintenance Manuals for seating, systems furniture and keyboard trays.

E2010 FIXED FURNISHINGS (SID)

Fixed furnishings (SID) are funded as part of the construction project and are not funded as part of FF&E. Each submittal must demonstrate complete coordination with the facility design and with the package for movable furnishings.

Develop design as described herein and provide storage shelving, equipment racks, and window treatments. Cross reference C10 Interior Construction, and C30 Interior Finishes, for performance requirements. Each submittal must demonstrate complete coordination with the facility design and with the package for movable furnishings.

E201001 FIXED ARTWORK

As required, provide framed, graphics and/or logo of activity in appropriate locations as considered SID and are funded as part of the construction project.

E201002 WINDOW TREATMENTS

All windows and other glazed openings to the exterior of the building shall be provided with horizontal blinds or blackout shades (motorized where indicated) which are considered SID and are funded as part of the construction project.

Soft window treatments, such as draperies, are considered FF&E and shall be included in the FF&E package, as required.

E201003 FIXED SEATING AND TABLES

Provide locker room benches per floor plans.

E201004 INTERIOR LANDSCAPE (FIXED)

Not applicable.

E2020 MOVABLE FURNISHINGS

The design of the FF&E package is funded as part of the construction contract base bid. The purchase and installation coordination of FF&E is a planned modification to the contract and funded separately as part of Collateral Equipment. The specific process is outlined in PTS E20 in Part 4 of this RFP. The estimated Collateral Equipment cost is provided for information purposes only. The Contractor only needs to propose the Handling and Administrative Rate (HAR).

Design and provide an FF&E package in accordance with UFC 03-120-10, Interior Design, and other portions of this RFP for all areas as developed during Activity programming to provide a fully usable and complete facility. FF&E may also include specialty items specified by the Activity and the Contractor's Interior Designer is responsible for incorporating these into the FF&E package.

The Contractor’s Interior Designer is responsible for submitting the following written BVD justifications:

Under $3,000: For any procurement in the FF&E package with a value under $3,000, the Interior Designer may utilize any BPA holder. If the BPA holders cannot supply the item, any other manufacturer may be utilized.

Between $3,000 and $150,000: For any procurement in the FF&E package with a value between $3,000 and $150,000, the Contractor’s Interior Designer shall review pricing from at least three manufacturers as well as UNICOR (Federal Prison Industries). The Contractor’s Interior Designer must confirm the pricing with the vendor. The BVD form must be completed and submitted.

Over $150,000: For any procurement in the FF&E package with a value over $150,000, the Contractor’s Interior Designer shall solicit proposals from all BPA holders under the applicable roup for FF&E procurements greater than $150,000 as well as UNICOR. The Contractor’s Interior Designer shall develop performance criteria and project requirements based on a generic design from which the BPA holders and UNICOR can develop a price and performance proposal. The BVD form must be completed and submitted, and manufacturer’s quotes and a summary of all proposals must be attached.

The Best Value Determination shall be made on the basis of quality and function as well as price. The analysis shall focus on determining the best overall value to the government. Refer to the E20 section of Part 4 for further information.

Documentation shall be provided to the Government with the final FF&E package. Specific Documentation is indicated in Part 4 of the RFP. The BVD Statement shall be completed and signed by the Contractor's Interior Designer. A sample BVD form and instructions will be provided during the FF&E Procurement Requirements Meeting.

The Contractor, as a planned modification, shall be authorized by the Government Contracting Officer

to procure all furniture/furnishings in the approved final FF&E package using predominately negotiated Federal contracts as directed by the Contracting Officer and the NAVFAC Interior Designer. When the modification for turnkey furniture procurement is exercised, the Contractor's proposed Handling and Administrative Rate (HAR) shall not exceed 5% of the total cost of the FF&E, shipping, freight, handling, and installation. The HAR includes all of the Prime Contractor's effort related to the storage, coordination, handling and administration of subcontractors, and all other associated costs (including bonds) and profit for the procurement of FF&E. No other charges, fees, or markups will be authorized. The Contractor shall establish and submit a fixed percentage figure, for the administration effort of this modification (HAR), with the initial project proposal as part of the Contractor's Pricing Schedule.

E202001 MOVABLE ARTWORK

Provide movable artwork as required.

E202002 MODULAR PREFABRICATED FURNITURE

Provide modular, furniture and freestanding workstation desking, with storage, as required. Provide at a minimum, an articulating keyboard tray with left or right handed mouse extension for each computer location. Establish requirements with the Activity. Coordinate with D5020 Lighting and Branch Wiring and D5030 Communications and Security for additional requirements.

E202003 FREESTANDING FURNITURE AND FILES

Provide ergonomic task seating, lounge, and guest seating, storage and filing, tables, as required. Provide conference tables with option for utility connections.

E202004 RUGS & ACCESSORIES

Provide marker boards (white boards) and tack boards as required.

E202005 MULTIPLE SEATING (MOVABLE)

Not applicable.

E202006 INTERIOR LANDSCAPING (MOVABLE)

Not applicable.

E202090 OTHER MOVABLE FURNISHINGS

Provide waste receptacles, recycling containers, clocks, literature racks, microwaves, refrigerators, non-plumbed coffee pots, and other appliances as required.

--End of Section--

THIS PAGE HAS BEEN INTENTIONALLY LEFT BLANK

6. ENGINEERING SYSTEMS REQUIREMENTS

F10 SPECIAL CONSTRUCTION

SYSTEM DESCRIPTION

GENERAL SYSTEMS REQUIREMENTS

F1010 SPECIAL STRUCTURES

F101001 METAL BUILDING SYSTEMS (PRE-ENGINEERED)

Not Applicable.

F1020 INTEGRATED CONSTRUCTION

F102001 SPECIAL PURPOSE ROOMS

Not Applicable.

F1030 SPECIAL CONSTRUCTION SYSTEMS

Not Applicable.

F104001 INTERIOR SWIMMING POOLS

Not Applicable.

--End of Section--

THIS PAGE HAS BEEN INTENTIONALLY LEFT BLANK

6. ENGINEERING SYSTEMS REQUIREMENTS

F20 SELECTIVE BUILDING DEMOLITION

GENERAL SYSTEMS REQUIREMENTS

Not Applicable.

F2010 BUILDING ELEMENTS DEMOLITION

Not Applicable.

F2010 1.1 GENERAL DEMOLITION

Not Applicable.

F2010 1.2 UTILITIES

Not Applicable.

F2010 1.3 DUST CONTROL

Not Applicable.

F2010 1.4 TRAFFIC CONTROL

Not Applicable.

F2010 1.5 WEATHER PROTECTION

Not Applicable.

F2010 1.6 BURNING

Not Applicable.

F201001 SUBSTRUCTURE & SUPERSTRUCTURE

Not Applicable.

F201002 EXTERIOR CLOSURE

Not Applicable.

F201003 ROOFING

Not Applicable.

F201004 INTERIOR CONSTRUCTION & FINISHES

Not Applicable.

F201005 CONVEYING SYSTEMS

Not Applicable.

F201006 MECHANICAL SYSTEMS

Not Applicable.

F201007 ELECTRICAL SYSTEMS

Not Applicable.

F201008 EQUIPMENT & FURNISHINGS

Not Applicable.

F201090 OTHER NON-HAZARDOUS SELECTIVE BUILDING DEMOLITION

Not Applicable.

F2020 HAZARDOUS COMPONENT ABATEMENT

Not Applicable.

F2020 1.1 PRIVATE QUALIFIED PERSON (PQP)

Not Applicable.

F2020 1.2 FURNISHINGS

Not Applicable.

F2020 1.3 ASBESTOS

Not Applicable.

F2020 1.4 LEAD BASED PAINT

Not Applicable.

F2020 1.5 PAINT RELATED WORK

Not Applicable.

F2020 1.6 MERCURY & LLR COMPONENTS

Not Applicable.

F2020 1.7 PCB'S

Not Applicable.

F2020 1.8 OZONE DEPLETING SUBSTANCES (ODS)

Not Applicable.

F2020 1.9 ANIMAL DROPPINGS

Not Applicable.

F2020 1.10 MOLDS AND SPORES

Not Applicable.

F2020 1.11 DISPOSAL

Not Applicable.

F202001 SUBSTRUCTURE & SUPERSTRUCTURE

Not Applicable.

F202002 EXTERIOR CLOSURE

Not Applicable.

F202003 ROOFING

Not Applicable.

F202004 INTERIOR CONSTRUCTION & FINISHES

Not Applicable.

F202005 CONVEYING SYSTEMS

Not Applicable.

F202006 MECHANICAL SYSTEMS

Not Applicable.

F202007 ELECTRICAL SYSTEMS

Not Applicable.

F202008 EQUIPMENT & FURNISHINGS

Not Applicable.

F202090 OTHER HAZARDOUS SELECTIVE BUILDING DEMOLITION

Not Applicable.

--End of Section--

6. ENGINEERING SYSTEMS REQUIREMENTS

G10 SITE PREPARATION

SYSTEM DESCRIPTION

The site preparation system consists of site clearing, demolition, salvage, relocation, earthwork, and hazardous waste remediation necessary to ready the site for other work associated with the project. This site contains a cohesive subgrade that is susceptible to weakening and may require soil modification. Refer to Part 3 - Chapter 3 for soil modification requirements.

GENERAL SYSTEM REQUIREMENTS

Develop the project site and perform all off-site work necessary to meet the requirements of the project, antiterrorism criteria, local codes, reference standards, technical specifications and performance criteria.

A topographic survey of the existing site has been performed in December, 2012 and is included in Part 6. The topographic survey has been provided to show the location of existing facilities, areas of new work required by this RFP and the character of the sites. Prior to starting work, physically verify the location of all existing utilities prior to construction and obtain all additional survey data required to provide a quality final design. The existence, size and/or location of the utilities are not guaranteed by the survey provided. Electronic files of the topographic surveys will be provided to the Contractor only after award of the contract.

Unless otherwise noted, provide new facilities at the locations indicated on the drawings in another part of this RFP.

Minimize the impact of construction activity on operations and neighboring facilities.

Identify and obtain all permits to comply with all federal, state, and local regulatory requirements associated with this work. The contractor shall submit a complete "Permits Record of Decision" (PROD) form with the first design submittal package. Contractor shall determine correct permit fees and pay said fees. Copies of all permits, permit applications, and the completed PROD form shall be forwarded to the Government’s Civil Reviewer and Environmental Reviewer.

Jurisdictional tidal and non-tidal wetlands have been identified adjacent to the project site. All tidal and non-tidal wetlands work shall be performed in accordance with the permits obtained as required by UFC 3-201-01, *Civil Engineering*.

Coordinate and obtain the Resident Officer In Charge of Construction's (ROICC) approval for proposed haul route(s), work site access point(s), employee parking location(s) and material laydown and storage area(s).

Refer to Site Analysis and Building Requirements Sections for additional site preparation functional program information.

The Contractor shall be responsible to protect all disturbed or exposed soil from the weather. Any soil disturbed or exposed by the Contractor, that is subsequently exposed to rain or other precipitation, shall become the responsibility of the Contractor to stabilize.

GEOTECHNICAL INFORMATION

Subsurface soil information is included in other portions of this RFP.

Any included subsurface information is only for the Contractor's information and is not guaranteed to fully represent all subsurface conditions. The Government shall not be responsible for any interpretation or conclusion by the Contractor drawn from the data or information.

Any geotechnical report accompanying the subsurface information is provided only to better convey data (boring logs, testing, etc.) or to document observed site conditions. The assumptions, analysis, and recommendations of any accompanying report were developed for preliminary planning purposes only and may not reflect present project requirements. The Contractor is required to retain a Geotechnical Engineer experienced and licensed in the geographic region of the project to interpret the provided information as related to his design concept and develop geotechnical requirements to support design and construction.

Minor variations in subsurface conditions between borings should be anticipated. The Contractor shall bear all costs associated with the site preparation, ground improvement and foundations except as allowed by Contract Clause FAR 52.236-2, "Differing Site Conditions". The Contractor's Geotechnical Engineer shall perform additional subsurface investigation/testing as required to adequately determine all applicable geotechnical factors including the type and capacity of the project foundations. The Contractor's Geotechnical Engineer shall consider the provided information and any additional information obtained and prepare a report as described in other portions of this RFP. The minimum requirements for the subsurface investigation and report are as required by UFC 1-300-09N with associated references.

As a minimum, the successful bidder's Geotechnical Engineer shall perform five borings to a depth of 80 feet and supplementary laboratory classification of soils encountered on the building site to support the foundation design and/or subsequent pile driving analysis.

Personnel under the supervision of a registered Professional Engineer shall provide inspection of excavations and soil/groundwater conditions throughout construction. The Engineer shall be responsible for performing pre-construction and periodic site visits throughout construction to assess site conditions. The Engineer, with the concurrence of the Contractor and the Contracting Officer, shall update the excavation, sheeting, shoring and dewatering plans as construction progresses to reflect actual site conditions and shall submit the updated plan and a written report (with professional stamp) at least monthly informing the Contractor and Contracting Officer of the status of the plan and an accounting of Contractor adherence to the plan; specifically addressing any present or potential problems. The Engineer shall be available to meet with the Contracting Officer at any time throughout the contract duration. The Contractor shall bear all costs of the Engineer.

G1010 SITE CLEARING

G101001 CLEARING

The project site has saleable timber.

All timber removed from the project site shall become the property of the Contractor. The Contractor shall reimburse the Government for the value of the timber by submitting payment to the Contracting Officer by cashier’s or certified check in the amount of the appraised value, made payable to the U.S. Treasury and deposited by the Contracting Officer into the Navy's forestry account. The Contractor is required to pay the appraised amount to the Government within 30 days after notice to proceed has been given.

Burning will not be allowed.

G101002 TREE REMOVAL

Remove and dispose of all trees as required for project construction.

G101003 STUMP REMOVAL

Remove and dispose of all stumps from trees and shrubs cleared.

G101004 GRUBBING

Remove all logs, shrubs, matted roots, brush and other debris produced as a result of tree removal and site clearing.

G101005 SELECTIVE THINNING

G101006 DEBRIS DISPOSAL

All grubbing and clearing residue, demolished material, rubbish and debris generated by this project shall be hauled off-site and off station by the Contractor.

G1020 SITE DEMOLITION & RELOCATIONS

G102001 BUILDING MASS DEMOLITION

Not Applicable.

G102002 ABOVEGROUND SITE DEMOLITION

Remove pavement indicated on drawings provided in Part 6 of this RFP to the extend and limits shown.

G102002 1.1 ABOVEGROUND STORAGE TANKS

Not Applicable.

G102003 UNDERGROUND SITE DEMOLITION

Preserve all existing utilities required for proposed project.

Abandonment of utility systems shall be done in a manner that conforms to applicable codes and regulations, removes their presence from the ground surface and clearly indicates that they have been abandoned. Utilities shall not be abandoned in place underneath or within 10 feet (3.0 m) of any new facilities.

All conduits to be abandoned shall have wiring removed.

All piping to be abandoned shall be filled with flowable fill. Piping shall be removed under pavements subject to potential vehicle loadings.

Remove existing utility structures to 3 feet (900 mm) below existing or new adjacent grade, whichever is greater. Break up bases to permit drainage. Fill with clean sand.

G102003 1.1 UNDERGROUND STORAGE TANKS

An underground storage tank report is not provided to support this project. The presence of underground storage tanks is not anticipated.

G102004 BUILDING RELOCATION

Not Applicable.

G102005 UTILITY RELOCATION

Comply with the requirements of the utility provider concerning the utility relocation. Contractor shall be responsible for all costs of utility relocations or extensions. Any amounts that may be included in the contract for utility relocation or extension are only estimates. Actual costs may be higher or lower. The Contracting Officer may modify the contract to capture the difference (either positive or negative), which shall only include direct costs of the utility relocation or extension. No overhead or profit costs shall be paid to the contractor for utility relocation or extension work done by the utility owner.

The contractor shall be responsible for all coordination of utility relocations or extensions, with the utility owners, the base, the Contracting Officer, and any other affected parties. This effort includes, but is not limited to notification prior to the start of construction; coordination for identification of existing utility locations; scheduling for relocation or extension activities; coordination with, between, and payment to utility owners for any relocation, extension, or adjustment that may be required; ensuring any relocations or extensions do not conflict with any other part of the project; and ensuring required adjustments are made in timely manner.

Contractor shall be responsible to provide temporary utility services, for utility outages, as necessary.

G102006 FENCING RELOCATION

Not Applicable.

G102007 SITE CLEANUP

Rubbish and debris accumulation on site is not permitted.

G102090 OTHER SITE DEMOLITION & RELOCATIONS

G1030 SITE EARTHWORK

G103001 GRADING

Finish floor elevations for new facilities shall be above the 100 year flood elevation. Provide elevations for mechanical/electrical equipment pads above the 100 year flood elevation.

G103002 COMMON EXCAVATION

G103003 ROCK EXCAVATION

Blasting will not be permitted.

G103004 FILL & BORROW

Borrow and select fill shall come from off-base sources.

G103005 COMPACTION

Provide compaction in accordance with technical specifications.

G103006 SOIL STABILIZATION

Provide soil stabilization such as geotextiles and geogrids, lime, or cement designed to function as required by site conditions. This site contains a cohesive subgrade that is susceptible to weakening and may require soil modification. Refer to Part 3 – Chapter 3 for soil modification requirements.

G103007 SLOPE STABILIZATION

The Contractor shall perform borings for the complete analysis and design of the slope stabilization.

Provide slope stabilization through appropriate grading and site design for a minimum factor of safety of 1.5 or slope that does not exceed the maximum slope per local code requirements.

The complete anaylsis and design of the method used for slope stabilization with a factor of safety of 1.5 shall be performed and signed and sealed by a registered Professional Engineer.

G103008 SOIL TREATMENT

Treat the area around the entire foundation of each building for termite control in accordance with manufacturer's instructions.

G103009 SHORING

Provide sheeting and shoring plan if required by local codes and/or OSHA. The plan shall be signed and sealed by a Professional Engineer registered in the State of Virginia.

G103010 TEMPORARY DEWATERING

Provide pumps, ditching and grading during construction to prevent conditions that will promote the deterioration of the soil or interruptions to construction progress.

G103011 TEMPORARY EROSION & SEDIMENT CONTROL

The Contractor shall prepare and obtain approval for an erosion and sediment control plan in accordance with the Virginia Erosion and Sediment Control Handbook for the project prior to land disturbing activities of any kind.

The erosion and sediment control plan shall be submitted to Natural Resources and Environmental Affairs Branch (NREAB), MCB Quantico and to NAVFAC Washington via the Design Project Leader for plan approval. The erosion and sediment control plan and measures shall fully satisfy Federal, State, and Local requirements.

Construct temporary measures including but not limited to silt fence, tree protection, inlet protection, culvert inlet protection, construction entrances, outlet protection, and temporary and permanent

seeding to reduce on-site erosion and off-site runoff and sedimentation. Control fugitive dust emissions from work areas and temporary roadways during construction by using water or another suitable dust suppressant. Promptly remove spilled or tracked dirt from paved roadways to prevent it from becoming airborne.

G103090 OTHER SITE EARTHWORK

There are no known or suspected hazardous waste sites on this area.

G1040 HAZARDOUS WASTE REMEDIATION

A contaminated soil/groundwater report is not provided to support this project. There are no known soil contaminations on site.

Prior to starting work, conduct any additional testing that may be needed to provide a final design and comply with all applicable federal, regional, state and local regulations. Refer to UFC 3-800-10N, *Environmental Engineering for Facility Construction*, for additional requirements and criteria.

G1040 1.1 EXCAVATION

Non-contaminated water may be disposed of on-site.

G1040 1.2 STOCKPILED SOILS

Not Applicable.

G1040 1.3 CLEAN FILL

Not Applicable.

G1040 1.4 SPILLS

In the event of a spill or release of hazardous substances, pollutant, contaminant or oil, notify the Contracting Officer immediately. Containment/Control actions shall be taken immediately to minimize the effect of any spill or leak. Clean up shall be performed at the Contractor's expense in accordance with applicable federal, state and local regulations.

G1040 1.5 DISPOSAL

All waste materials shall become the property of the Contractor and shall be transported, disposed of or recycled in accordance with applicable federal, state and local regulations.

Reports of waste generated (including recycling) including material type (CDD, concrete, scrap metal, used oil, etc), tons, disposal destination and disposal cost shall be reported on a Construction Waste Management Report to Natural Resources and Environmental Affairs Branch (NREAB) within 30 days of the close of a project, and no later than Oct 15 to be included in annual report submissions. Please fax the Construction Waste Management Report to (703)784-4953. POC, Mr. Bhasker Thaker, (703)432-0531, bhasker.thaker@usmc.mil.

No hazardous, toxic, or universal waste shall be disposed or hazardous material abandoned on government property. The government is not responsible for disposal of Contractor generated waste material. The disposal of incidental materials used to accomplish the work including, but not limited

to, aerosol cans, paint, cleaning solvents, contaminated brushes, spent rags, clothing, etc. are the responsibility of the Contractor. The list is illustrative rather than inclusive.

A waste profile with supporting lab results must be sent to the Environmental Compliance Section at the beginning of any project that results in waste disposal. Contact Bhasker Thaker at (703)432-0531 or Donna Heric at (703)432-0527 for a copy of the Manifest Standard Operating Procedure (SOP) at the beginning of any project that results in waste disposal. All hazardous waste is to be removed from MCB Quantico within 60 days whenever possible.

Submit a copy of the applicable EPA and State permit(s), manifest(s), or license(s) for transportation, treatment, storage, and disposal of hazardous and regulated waste by permitted facilities. All hazardous waste handling and disposal must be coordinated with the Base's Natural Resources and Environmental Affairs Branch (NREAB) at (703)784-4030/432-0530/432-0531. A preliminary copy of the manifest and LDR shall be forwarded to the Environmental Compliance Section of NREAB at least 24 hours prior to waste pickup. Only authorized personnel from the NREAB have the authority to sign Hazardous Waste Manifests.

Disposal of universal waste including but not limited to mercury containing building products such as florescent lamps, mercury lamps and high pressure sodium lamps must be coordinated with the Environmental Compliance Section of NREAB at (703)784-4030.

If the work requires the temporary storage/collection of regulated or hazardous wastes, contact the Environmental Compliance Section of NREAB at (703)784-4030 for detailed assistance prior to generation of hazardous waste. All hazardous waste is removed from MCB Quantico within 60 days whenever possible.

Asbestos is no longer being managed by Environmental Affairs. Mr. Donald Sisco, Safety Division, is the appointed Asbestos Program Manager by the Commander, Marine Corps Base, Quantico. Questions pertaining to disposal of asbestos should be directed to Mr. Sisco at (703)784-2752.

Period of review for each submittal is the same as the initial submittal. 100% design plans are required for NREA review of SWPPP or E&SC plans.

--End of Section--

Legend

- Road Centerline
- Surface Water Centerline
- Existing Structures
- Resource Protection Area (100 ft buffer)
- Wetlands

N
W E
S

0 95 190 380 570 760 950
Feet

6. ENGINEERING SYSTEMS REQUIREMENTS

G20 SITE IMPROVEMENTS

SYSTEM DESCRIPTION

The site improvements system consists of pavements and pavement related features, landscaping and other exterior site development work related to this project. Pavement design shall be performed by a licensed Professional Engineer familiar with conditions local to the project site. This site contains a cohesive subgrade that is susceptible to weakening and may require soil modification. Refer to Part 3 - Chapter 3 for soil modification requirements.

GENERAL SYSTEMS REQUIREMENTS

Provide site improvements as required to make a useable facility that meets functional and operational requirements, incorporates all applicable anti-terrorism, force protection and physical security requirements and blends into the existing environment.

Provide site improvements in conformance with applicable requirements of the DoD, "ABA (Architectural Barriers Act) Accessibility Standard" (DoD ABAAS) and the DEPSECDEF Memorandum.

Identify and obtain all permits to comply with all federal, state, and local regulatory requirements associated with this work. The contractor shall complete the "Permits Record of Decision" (PROD) form with the first design submittal package. A blank PROD form can be obtained at the Download Tab of Part 6 of the NAVFAC Design-Build website at the following link http://ndbm.wbdg.org/system/datas/11/original/PROD_Form.doc . Contractor shall determine correct permit fees and pay said fees. Copies of all permits, permit applications, and the completed PROD form shall be forwarded to the Government's Civil Reviewer.

Provide improvements as required to conform to all applicable anti-terrorism and physical security requirements.

Minimize the impact of construction activity on operations and neighboring facilities.

Locate new site improvements at locations indicated on the drawings in Part 6 of this RFP. If specific locations are not provided, site the improvements to develop appropriate and positive relationships with other facilities and to conform to existing development patterns.

Refer to Site Analysis and Building Requirements Sections for additional site improvement functional program information.

G2010 ROADWAYS

The design of pavements shall take into consideration the anticipated daily traffic (326 cars, 4 single unit trucks, 5 days per week; and 2 H20 loadings per week) over the life of the project (20 years) as well as the existing soil conditions at the site. Porous pavement systems and porous pavers may not be used.

Provide new roadways of aggregate pavement where indicated or specified in this RFP.

Provide new roadway and other pavement sections as required by soil conditions and determined by the Designer of Record. Design pavement sections in accordance with UFC 3-201-01 Civil Engineering.

The minimum aggregate pavement section for roads is 12 inch aggregate, over geotextile fabric on compacted subgrade.

Provide other roadway improvements including markings and signage.

G2010.1 ROADWAYS

Provide new roadways of bituminous pavement in lieu of aggregate.

The minimum bituminous pavement section for roads is 1.5 inch bituminous surface, over 2 inch bituminous base, on 8 inch aggregate base, over geotextile fabric on compacted subgrade.

G201001 BASES & SUBBASES

Crushed concrete meeting gradation for aggregate base or subbase course may be used.

The following materials will not be allowed for base or subbase courses: lean concrete, and cement stabilized soil. Refer to Part 3 – Chapter 3 for subgrade soil modification requirements.

G201002 CURBS & GUTTERS

Provide 6 inch curb and gutter to tie into adjacent facilities, and around new parking and roadways as indicated on the drawings in Part 6 of the RFP.

G201003 PAVED SURFACES

Recycled asphalt pavement material may be used for bituminous concrete pavement as permitted by the SHS.

Cutback asphalt may not be used except under very limited circumstances. Contact the Air Program Manager if the use of cutback asphalt is required.

G201004 MARKING & SIGNAGE

Provide pavement markings including crosswalks. The VOC limit for paints used to mark traffic surfaces is 150 grams of VOC per liter of coating thinned to the manufacturer's maximum recommendation, excluding the volume of any water, exempt compounds, or colorant added to tint bases.

Provide signage in accordance with the Manual on Uniform Traffic Control Devices (MUTCD).

Provide temporary pavement markings and signage throughout construction to meet phasing requirements indicated in the project program. Provide temporary signage in accordance with the MUTCD.

G201005 GUARDRAILS & BARRIERS

Provide guardrails, wheelstops, and bollards in accordance with the UFC 3-201-01, *Civil Engineering*.

G201006 RESURFACING

Provide resurfacing of existing pavement by bituminous mill and overlay, where indicated on the drawings in Part 6 of the RFP. Mill the top 2 inch existing bituminous surface and overlay with 2 inch bituminous surface. Widen the north turn radius at the intersection of Little and Geiger Roads, as indicated on the drawings in Part 6 of the RFP.

G201090 OTHER ROADWAYS

Not Applicable.

G2020 PARKING LOTS

The minimum aggregate pavement section for drive aisles is 12 inch aggregate, over geotextile fabric on compacted subgrade. The minimum aggregate pavement section for parking spaces is 8 inch aggregate, over geotextile fabric on compacted subgrade.

Provide parking for 326 vehicles. The design of pavements shall take into consideration the anticipated daily traffic (326 cars, 4 single unit trucks, 5 days per week; 2 H20 loadings per week) over the life of the project (20 years) as well as the existing soil conditions at the site.

Provide parking lots of aggregate pavement where indicated or specified in this RFP. Porous pavement and porous pavers shall not be used.

Provide dumpster pad and emergency/delivery vehicle access drives of rigid concrete pavement where indicated or specified in this RFP.

Provide new parking and other pavement sections as required by soil conditions and determined by Designer of Record. Design pavement sections in accordance with UFC 3-201-01 Civil Engineering.

The minimum Portland Cement Concert (PCC) pavement section is 6 inches PCC, on 6 inch aggregate base, over geotextile fabric on compacted subgrade.

Provide other parking improvements including parking entrances for two way traffic, bicycle racks, markings, and signage.

Provide handicapped parking in accordance with the new DoD, "ABA (Architectural Barriers Act) Accessibility Standard" (DoD ABAAS) and the DEPSECDEF Memorandum, located at http://www.access-board.gov/ada%2Daba/aba-standards-dod.cfm .

G2020.1 PARKING LOTS

Provide parking lots of bituminous pavement in lieu of aggregate. Porous pavement and porous pavers shall not be used.

The minimum bituminous pavement section for drive aisles is 1.5 inch bituminous surface, over 2 inch bituminous base, on 8 inch aggregate base, over geotextile fabric on compacted subgrade. The minimum bituminous pavement section for parking spaces is 1.5 inch bituminous surface, on 8 inch aggregate base, over geotextile fabric on compacted subgrade.

G202001 BASES & SUBBASES

Crushed concrete meeting gradation for aggregate base or subbase courses may be used.

The following materials will not be allowed for base or subbase course: lean concrete and cement stabilized soil. Refer to Part 3 – Chapter 3 for subgrade soil modification requirements.

G202002 CURBS & GUTTERS

Provide 6 inch curb and gutter to tie into adjacent facilities and around new parking and roadways as indicated on the drawings in Part 6 of the RFP.

G202003 PAVED SURFACES

Portland cement concrete shall have a minimum design flexural strength of 650 to 700 psi (4.48 to 4.83 MPa) in not more than 28 days.

Recycled asphalt pavement material may be used for bituminous concrete pavement (as permitted by the SHS).

Cutback asphalt may not be used except under very limited circumstances. Contact the Air Program Manager if the use of cutback asphalt is required.

G202004 MARKING & SIGNAGE

Provide permanent and temporary markings (pavement, curb and object), signage (regulatory, warning and guidance) and other traffic control devices as required to facilitate proper utilization of the parking areas.

Provide pavement markings including crosswalks.

Provide signage in accordance with the MUTCD.

Provide temporary pavement markings and signage to meet phasing requirements indicated in the project program. Provide temporary signage in accordance with the MUTCD.

G202005 GUARDRAILS & BARRIERS

Provide guardrails, wheel stops, and bollards in accordance with the UFC 3-201-01, *Civil Engineering*.

G202006 RESURFACING

Not Applicable.

G202007 MISCELLANEOUS STRUCTURES AND EQUIPMENT

Not Applicable.

G202090 OTHER PARKING LOTS

Not Applicable.

G2030 PEDESTRIAN PAVING

Provide a network of Portland cement concrete sidewalks, separated from, but connected to vehicular circulation systems, to allow pedestrian circulation between various exterior elements of the project.

G203001 BASES & SUBBASES

The following materials will not be allowed for base or subbase courses; lean concrete and cement stabilized soil. Refer to Part 3 – Chapter 3 for subgrade soil modification requirements.

G203002 CURBS & GUTTERS

Not Applicable.

G203003 PAVED SURFACES

Portland cement concrete shall have a minimum design flexural strength of 650 to 700 psi (4.48 to 4.83 MPa) in not more than 28 days.

G203004 GUARDRAILS & BARRIERS

Not Applicable.

G203005 RESURFACING

Not Applicable.

G203006 OTHER WALKS, STEPS & TERRACES

Site stairs shall be provided to connect the south and north sides of the building. See drawings in Part 6 of the RFP for location.

G2040 SITE DEVELOPMENT

G204001 FENCING & GATES

Provide ten foot high black aluminum ornamental fence, gates and brick pilasters as indicated on the drawings in Part 6 of this RFP.

All fence components are to be from one manufacturer. Aluminum material for fence framework (i.e., tubular pickets, rails and posts) shall conform to the requirements of ASTM B221.

Pickets shall be 3/4" square. The number of rails shall vary with the style, height and strength as determined by manufacturer.

Aluminum castings shall be used for all post caps, scrolls, finials, and other miscellaneous hardware. Hinges and latches shall be fabricated from aluminum, stainless steel or composite materials. Personnel gates shall be equipped with egress panic hardware.

All rail and upright intersections shall be joined by welding. All picket and rail intersections shall also be joined by welding.

G204002 RETAINING AND FREESTANDING WALLS

Provide retaining walls in locations shown on the drawings in Part 6, and where required by grading.

G204003 EXTERIOR FURNISHINGS

All site furnishings shall conform to the Base Exterior Architectural Plan (BEAP) and the Installation and Appearance Plan. Provide a designated smoking area. At a minimum, provide a trash and ash receptacle at the designated smoking area.

G204004 SECURITY STRUCTURES

Provide passive barrier systems including fences and bollards. Fences and bollards are not required to be vehicle rated.

G204005 SIGNAGE

Provide signage in accordance with the Activity's BEAP and the Installation and Appearance Guide.

G204006 FOUNTAINS & POOLS

Not Applicable.

G204007 PLAYING FIELDS

Not Applicable.

G204008 TERRACE AND PERIMETER WALLS

Provide terrace walls where indicated on drawings in Part 6 of this RFP.

G204009 FLAGPOLES

Not Applicable.

G204090 OTHER SITE IMPROVEMENTS

Trash dumpster and equipment screen walls shall conform to Section B20, Exterior Enclosure.

Provide a 40’ x 50’ Command Operations Center (COC) training area concrete pad. Provide a concrete pad as required by soil conditions and determined by Designer of Record. Design pavement section in accordance with UFC 3-201-01 Civil Engineering. Concrete shall be capable of supporting a HMMWV and an Integrated Trailer-ECU-Generator (ITEG) weighing 4,200 pounds. Minimum concrete pad section shall be 6 inch thick PCC, on 4 inch aggregate base, over geotextile fabric on compact subgrade. Portland cement concrete shall have a minimum design flexural strength of 650 to 700 psi (4.48 to 4.83 MPa) in not more than 28 days.

Provide pull-up bars in locations indicated on the drawings in Part 6 of this RFP. A sketch indicating pull-up bar dimensions is provided in Part 6 of this RFP.

G2050 LANDSCAPING

Provide complete landscaping consisting of lawn, groundcover, trees, shrubs, perennials and ornamental grasses as required to provide a quality, cost-effective, functional and visually appealing landscape program that will enhance the development, while complying with all applicable anti-terrorism, force protection and physical security requirements.

Guarantee all landscaping for a period of one year after final acceptance of the project.

Provide complete landscaping maintenance, including routine mowing, throughout the guarantee period.

Provide shrubs or small growing trees for screening of mechanical equipment/wall, dumpster enclosures, and other obstructions that do not present an aesthetic view from the street.

G205001 FINE GRADING AND SOIL PREPARATION

Provide 4" of topsoil for all grass areas and other pervious areas disturbed by Contractor operations. Refer to Section G10, Site Preparation for additional requirements.

G205002 EROSION CONTROL MEASURES

Prevent erosion from occurring by providing erosion control measures as required by city, state and federal requirements. Refer to Section G10 for temporary erosion control measures.

G205003 TOPSOIL AND PLANTING BEDS

See G205005 Plantings.

G205004 SEEDING SPRIGGING AND SODDING

Areas indicated to be turfed in another part of this RFP shall be seeded or sodded. Provide seed and fertilize existing grass areas disturbed by Contractor operations.

G205005 PLANTINGS

Preserve existing trees to the greatest extent possible.

G205006 PLANTERS

G205007 IRRIGATION SYSTEMS

Not Applicable.

G205090 OTHER LANDSCAPING

--End of Section--

THIS PAGE HAS BEEN INTENTIONALLY LEFT BLANK

6. ENGINEERING SYSTEMS REQUIREMENTS

G30 SITE CIVIL/MECHANICAL UTILITIES

SYSTEM DESCRIPTION

The site civil/mechanical utility systems include water supply systems, sanitary sewer systems, storm drainage systems, natural gas distribution systems, condenser water distribution systems, and associated appurtenances which are more than 5 feet (1.5 meters) outside the building.

GENERAL SYSTEM REQUIREMENTS

Develop the site to provide water, fire protection, sanitary sewer, storm drainage, and natural gas distribution services that meet the requirements of each applicable regulatory agency that governs and issues permits for the construction and operation of these systems.

Provide each system complete and ready for operation.

Physically verify the location of existing above and below ground utilities prior to starting work.

Identify and obtain all permits to comply with all federal, state, and local regulatory requirements associated with this work. The contractor shall complete the "Permits Record of Decision" (PROD) form with the first design submittal package. A blank PROD form can be obtained at the Download Tab of Part 6 of the NAVFAC Design-Build website at the following link http://www.wbdg.org/ndbm/Download/Down_Additional.html?Section=AdditionalInfo . Contractor shall determine correct permit fees and pay said fees. Copies of all permits, permit applications, and the completed PROD form shall be forwarded to the Government's Civil/Mechanical Reviewer.

Minimize the impact of construction activity on facility operations and neighboring facilities.

Utility connection points are indicated on the drawings in Part 6 of this RFP. Obtain final approvals from the Government's Civil/Mechanical Reviewer and the Contracting Officer for all utility connection points associated with this work.

Coordinate with the local utility providers and pay any fees or charges required to connect to their utility. Contractor is to coordinate with each utility company; comply with any requirements by the utility company associated with provision of the service (eg, for provision of equipment and/or infrastructure in support of the service they are providing); and pay the utility company for any charges they levy associated with provision of the service, at no additional cost to the Government. Contractor must work with each utility company to determine costs that the contractor is responsible for.

Refer to Site Analysis and Building Requirements Sections for additional site civil/mechanical utilities information.

Provide all required fittings, connections and accessories required for a complete and usable system. All equipment shall be installed per the criteria of PTS Section G30 and the manufacturer's recommendations. Where the word "should" is used in the manufacturer's recommendations, substitute the word "shall".

G3010 WATER SUPPLY

The new water system is an extension of the existing water system. The existing water system serving the project site is owned, by the federal government. Water is supplied by Base water treatment plant. Provide the new water system and connections to the existing water system in accordance with UFC 3-201-01, *Civil Engineering*; the utility provider's requirements; and the state waterworks' regulations; whichever is more stringent.

Notify the utility provider of the additional demand generated by the proposed facility. Provide a copy of all correspondence with the utility provider to the Government's Civil/Mechanical Reviewer.

Provide connection to the existing water distribution system at the point indicated on the drawings in Part 6 of this RFP.

G301001 WELL SYSTEMS

Not Applicable.

G301002 POTABLE WATER DISTRIBUTION

Connect the new potable water distribution system to the distribution system at the points indicated on the drawings in Part 6 of this RFP.

Provide exterior corrosion protection on metallic pipe lines.

A water meter on each proposed domestic service line is required. Meter shall be utilized to measure flow in gallons. Meter shall meet Advanced Metering Infrastructure Standards for MCB Quantico, including the following:

a. The meter shall meet the minimum requirements specified in the Unified Facilities Guide Specification 33 12 33.00 30 WATER METERS.

b. The meter shall be provided with electronic pulse output proportional to the meter's rate of flow. This output shall be connected to the building electric meter which will report the water consumption to the MCBQ Advanced Metering Infrastructure (AMI) system.

c. The meter, its communications with the building electric meter, and subsequent reporting to the AMI system shall be tested and commissioned prior to project closeout.

The domestic water meter shall be installed inside the building.

Fire hydrants shall be yellow in color with tops marked in accordance with NFPA 291 color coding flow system.

Backflow preventers are required on all service entrance lines. Refer to ESR D20 and D40 for additional backflow preventer requirements.

G301003 POTABLE WATER STORAGE

Not Applicable.

G301004 FIRE PROTECTION WATER DISTRIBUTION

Provide new fire protection water service to the building. All work shall be in accordance with both UFC 3-201-01 and UFC 3-600-01.

G301005 FIRE PROTECTION WATER STORAGE

Not Applicable.

G301006 NON-POTABLE WATER DISTRIBUTION

Not Applicable.

G301007 PUMPING STATIONS

A package booster pump station will not be required.

G301008 PACKAGED WATER TREATMENT PLANTS

Not Applicable.

G301090 OTHER WATER SUPPLY

Not Applicable.

G3020 SANITARY SEWER

The new sanitary sewer system is connected to the existing sanitary sewer collection system. The existing sanitary sewer collection system serving the project site is owned by the federal government. Provide the new sanitary sewer system and connections to the existing sanitary sewer collection system in accordance with UFC 3-201-01, Civil Engineering; the utility provider's requirements; and the state sewerage regulations; whichever is more stringent.

Notify the utility provider of the additional wastewater flow generated by the proposed facility. Provide a copy of all correspondence with the utility provider to the Government Civil Reviewer and Contracting Officer.

Provide connection to the existing sanitary sewer collection system at the point indicated on the drawings in Part 6 of this RFP. Design will provide consideration of the capacity of the existing collection system.

G302001 SANITARY SEWER PIPING

Provide exterior corrosion protection on metallic pipe lines.

G302002 SANITARY SEWER MANHOLES & CLEANOUTS

Provide precast concrete manholes only.

G302003 LIFT STATIONS AND PUMPING STATIONS

A wastewater pump station will not be required.

G302004 PACKAGED SANITARY SEWER TREATMENT PLANTS

Not Applicable.

G302005 SEPTIC TANKS

Not Applicable.

G302006 DRAIN FIELDS

Not Applicable.

G302090 OTHER SANITARY SEWER

Not Applicable.

G3030 STORM SEWER

The existing storm sewer system serving the project site is owned, by the federal government. Provide the new storm sewer system and connections to the existing storm sewer system in accordance with UFC 3-201-01, *Civil Engineering*; the utility provider's requirements; and the state stormwater management laws and regulations; whichever is more stringent.

Provide connection to the existing storm sewer collection system at the point indicated on the drawings in Part 6 of this RFP. Confirm that all existing outfalls have adequate capacity to receive stormwater flow generated by the project.

Vehicle wash areas are not to be provided.

G303001 STORM SEWER PIPING

The following materials for storm sewer piping will **not** be allowed: Ductile iron, corrugated steel and corrugated aluminum.

Minimum storm sewer pipe size shall be 15 inch except for roof drain piping and underdrains. Minimum roof drain pipe size shall be 6 inch. Storm sewer piping materials shall be reinforced concrete pipe. Roof drain piping and underdrains shall be polyvinyl chloride (PVC) or high density polyethylene (HDPE).

G303002 STORM SEWER STRUCTURES

Provide precast concrete or cast in place concrete storm sewer structures.

G303003 LIFT STATIONS

Not Applicable.

G303004 CULVERTS

The following materials for culvert piping will **not** be allowed: PVC, ductile iron, corrugated steel, corrugated aluminum, HDPE. Culverts shall be reinforced concrete pipe.

G303005 HEADWALLS

Provide precast or cast in place concrete headwalls.

G303006 EROSION & SEDIMENT CONTROL MEASURES

Refer to Section G10 for Erosion and Sediment Control Measures.

G303007 STORM WATER MANAGEMENT

Comply with UFC 3-210-10. The use of Low Impact Development (LID) is required for the project to achieve design objectives stated in DoD Policy on Implementing Section 438 of the Energy and Independence and Security Act (EISA), dated 19 January, 2010 and Department of Navy Low Impact Development (LID) Policy for Storm Water Management, dated 16 November, 2007. The following LID features shall be considered: bioretention, filter/buffer strips, grassed swales, bioretention swales, infiltration trenches, rain gardens, and tree box filters. The use of rainwater harvesting cisterns and permeable pavement/pavers are **not** allowed for this project.

The Contractor shall evaluate the drainage conditions and submit sealed calculations to the Government for civil and environmental review supporting EISA Section 438 and NAVY LID policies have been met in accordance with UFC 3-210-10. Provide a narrative stating project design goals were achieved or to what extent with the sealed calculations.

Stormwater Management design shall comply with USGBC LEED-NC 2009 Sustainable Sites credits 6.1 and 6.2 for Stormwater Quantity and Quality Control.

The contractor shall obtain all required regulatory permits required for the proposed work. Coordinate all reports, submittals, and permit applications through the Contracting Officer.

The Stormwater Management Plan shall full satisfy all Federal and Local requirements. The contractor shall make concurrent submissions to Natural Resources and Environmental Affairs – MCB Quantico and to NAVFAC Washington for design division approval of all items submitted for the purpose of obtaining Stormwater Management plan approval

G303090 OTHER STORM SEWER

Not Applicable.

G3040 HEATING DISTRIBUTION

Not Applicable.

G304001 OVERHEAD HOT WATER SYSTEMS

Not Applicable.

G304002 OVERHEAD STEAM SYSTEMS

Not Applicable.

G304003 UNDERGROUND HOT WATER SYSTEMS

Not Applicable.

G304004 UNDERGROUND STEAM SYSTEMS

Not Applicable.

G304005 REINFORCED CONCRETE MANHOLES & VALVE BOXES

Not Applicable.

G304090 OTHER HEATING DISTRIBUTION

Not Applicable.

G3050 COOLING DISTRIBUTION

Not Applicable.

G305001 OVERHEAD COOLING SYSTEMS

Provide insulated steel condenser water piping with aluminum jacket. Insulation shall be cellular glass. Provide heat trace on all piping exposed to the weather down to below the frost line.

G305002 UNDERGROUND COOLING SYSTEMS

Provide direct buried, factory pre-fabricated, pre-insulated condenser water piping systems. Piping systems shall consist of a PVC carrier pipe with polyurethane insulation and a PVC jacket.

G305090 OTHER COOLING DISTRIBUTION

Not Applicable.

G3060 FUEL DISTRIBUTION

G306001 LIQUID FUEL DISTRIBUTION PIPING

Not Applicable.

G306003 LIQUID FUEL STORAGE TANKS

Not Applicable.

G306004 LIQUID FUEL DISPENSING EQUIPMENT

Not Applicable.

G306006 GAS DISTRIBUTION PIPING (NATURAL GAS)

The contractor is required to provide a gas line and meter to the building and tie into the existing supply line owned by Columbia Gas. The contractor must verify and coordinate the gas supply

capacity and tie-in with Columbia Gas. Provide steel natural gas piping system.

G306007 GAS STORAGE TANKS

Not Applicable.

G306009 OTHER GAS DISTRIBUTION

A gas meter on each proposed service line is required. Meter shall meet Advanced Metering Infrastructure Standards for MCB Quantico, including the following:

1. The meter shall meet the requirements specified in the Unified Facilities Guide Specification 33 51 13.00 30 NATURAL-GAS METERING.

2. The meter shall be provided with electronic pulse output proportional to the meter's rate of flow. This output shall be connected to the building electric meter, which will report the gas consumption to the MCBQ Advanced Metering Infrastructure (AMI) system.

The meter, its communication with the building electric meter, and subsequent reporting to the AMI System shall be tested and commissioned prior to project closeout.

G306090 OTHER FUEL DISTRIBUTION

Provide warning and identification tape for underground utilities.

G3090 OTHER SITE MECHANICAL UTILITIES

Not Applicable.

-- End of Section --

THIS PAGE HAS BEEN INTENTIONALLY LEFT BLANK

6. ENGINEERING SYSTEMS REQUIREMENTS

G40 SITE ELECTRICAL UTILITIES

SYSTEM DESCRIPTION

The site electrical utility system consists of all power and telecommunications and fiber optic cabling from the existing distribution system point of connection including all connections, accessories and devices as necessary and required for a complete and usable system. This section covers installations up to within 5 feet (1.5 meters) of new (or existing) building location.

Refer to electrical site sheets ES101 and ES102, included in Part 6 of this RFP for additional site electrical requirements.

GENERAL SYSTEM REQUIREMENTS

Provide an Electrical System complete in place, tested and approved, as specified throughout this RFP, as needed for a complete, usable and proper installation. All equipment shall be installed per the criteria of PTS Section G40 and the manufacturer’s recommendations. Where the word "should" is used in the manufacturer's recommendations, substitute the word "shall".

G4010 ELECTRICAL DISTRIBUTION

Connect to the existing13.2 kV, three phase, four wire, 60 Hertz electrical power system. The connection point shall be overhead at Pole ST-138 and extended to the project site underground in ductbank to a Pad Mounted Transformer.

The electrical system shall be sized assuming an infinite fault available at the point of connection unless the available fault is provided by Quantico.

G401001 SUBSTATIONS

Not Applicable.

G401002 TRANSFORMERS

Provide a three phase pad mounted transformer to feed the facility. Transformer primary shall be 13.2 kV and secondary shall be 480V/277V 3-Phase, 4-wire.

Transformers shall have the following features and meet all additional requirements of UFC-3-550-01:

1. Dead-Front Design with ANSI specific front plate spacing
2. Loop feed switch
3. Three surge arresters for radial feed circuits.
4. Biodegradable less-flammable liquid-insulated
5. Spare conduit in the high voltage section extending 1.5m out from the transformer pad.
6. Two position, oil-immersed, load break switch.
7. Six primary bushings.

Size transformer with 25% spare capacity.

G401003 SWITCHES, CONTROLS AND DEVICES

Existing overload electric conductors are installed on poles on the east side of the site. 3-1/c #4 copper conductors are located at pole ST-138. These conductors are rated 15kV nominal and operate at 13.2 kV.

G401004 OVERHEAD ELECTRIC CONDUCTORS

Not Applicable.

G401005 TOWERS, POLES, CROSSARMS AND INSULATORS

Not Applicable.

G401006 UNDERGROUND ELECTRIC CONDUCTORS

Provide a 15 kV medium voltage and a 600 volt secondary underground electrical power distribution systems to meet the connection requirements as indicated in paragraph G4010 "Electrical Distribution". Provide fused cut-outs and SPDs on connections to overhead distribution systems.

Splicing of medium voltage cables is not acceptable. For 600 volt or lower voltage circuits, provide XHHW-2 insulated copper secondary conductors.

G401007 DUCTBANKS, MANHOLES, HANDHOLES AND RACEWAYS

Provide a system of concrete encased ductbanks, handholes and manholes for underground power distribution system as indicated in UFC 3-550-01.

G401008 GROUNDING SYSTEMS

Provide a complete grounding system for the electrical power distribution system.

G401009 METERING

Site electrical branch circuits shall be metered by the building EMCS. Refer to section D50 for EMCS requirements.

G401010 CATHODIC PROTECTION SYSTEMS

Not Applicable.

G401011 EQUIPMENT REQUIREMENTS FOR COASTAL AND HIGH HUMIDITY AREAS

Provide exterior equipment designed for coastal and high humidity areas.

G4020 SITE LIGHTING

Provide site lighting for exterior, including underground distribution, handholes, grounding, poles,

fixtures and controls as required for a complete and usable system.

G402001 EXTERIOR LIGHTING FIXTURES AND CONTROLS

Provide area and site lighting for drive aisles, parking, and walkways. Provide pedestrian scale and low-level decorative site lighting for the fountain courtyard.

Provide LED type lighting fixtures, in accordance with base standards.

Provide an automatic lighting control system for exterior lighting fixtures utilizing lighting contactors, time switches, and photocell switches such that lighting will automatically turn "ON" at sunset and turn "OFF" at a user-programmable time.

G402002 SPECIAL SECURITY LIGHTING SYSTEMS

Provide special security lighting for COC Training Pad perimeter fence line.

G402003 OTHER AREA LIGHTING

Provide area lighting for COC Training Pad.

G402004 LIGHTING POLES

Provide steel poles complete with concrete foundations for site lighting.

G402005 UNDERGROUND ELECTRIC CONDUCTORS

Provide a complete underground distribution system for all site lighting systems.

G402006 DUCTBANKS, MANHOLES AND HANDHOLES

Provide a direct buried underground system including conduits and handholes to meet the connection requirements indicated in paragraph G4020 "Site Lighting".

G402007 GROUNDING SYSTEMS

Provide a complete grounding system for all site lighting systems. Provide ground rod for each of the poles.

G4030 SITE COMMUNICATION AND SECURITY

Provide a site communication and security system including, but not necessarily limited to, Voice and Data Telecommunications Systems, including all conduit and wiring, underground duckbank, underground structures, termination equipment, and grounding systems as required for a complete and usable system.

G403001 TELECOMMUNICATIONS SYSTEMS

Provide telecommunications service from the existing base outside plant telecommunications system. Provide additional pathways and manholes as required to facilitate the cable installation. See ES101 and ES102 in Part 6 of this RFP for additional information.

See ESRD503001 TELECOMMUNICATIONS SYSTEMS for general requirements of the telecommunications system.

The connection point for site telecommunications systems shall be underground in the main telecommunications room at Building 1999 and extended to the project site underground in a system of manholes and ductbank to telecommunications room 111.

Provide one 600 pair copper, one 24-strand single mode fiber optic cable, between the underground connection point and the building entrance facility.

Manholes shall be provided as required to accommodate splicing and changes in direction. Copper cable smaller than 50 pair and fiber optic cable shall be installed innerduct.

OSP Cable Requirements:

Provide filled cable meeting the requirements of ICEA S-99-689 and RUS 1755, 890 (PE-89).

Copper conductor cable shall be covered with an extruded solid insulating compound. Insulated conductors shall be twisted into pairs which are then stranded or oscillated to form a cylindrical core. Cable shall be completed by the application of a suitable core wrapping material, a corrugated copper or plastic coated aluminum shield, and an overall extruded jacket.

Fiber optic cable shall be single-mode, 8/125-um, 0.10 aperture 1310 nm in accordance with TIA-472D000, and ICEA S-87-640. Fiber optic cable shall be specifically designed for outside use with loose buffer construction. Provide central, non-metallic strength members with sufficient tensile strength for installation and residual rated loads to meet applicable performance requirements. Strength members shall be metallic if run in ductbanks that do not include copper cables. Fiber optic color code shall be in accordance with TIA/EIA-598.

Telecommunications splicing in maintenance manholes to existing systems (copper and fiber optic lines) shall be performed by Base Telephone (G6), but the construction contractor shall be responsible for the costs of this work. Contractor will be responsible to coordinate and schedule the performance of this work with G6.

G403002 CABLE TV SYSTEMS (CATV)

Not Applicable.

G403003 CABLES AND WIRING

Cables and wiring for site telecommunications and security systems shall be as indicated in UFC 3-580-01 and 3-580-10. Refer to ES101 and ES102 in Part 6 of this RFP for cabling requirements.

G403004 DUCTBANKS, MANHOLES AND HANDHOLES

Provide a system of ductbanks, manholes, and handholes for site telecommunications and security.

Provide a handhole within 50 feet of entering any building.

G403005 TOWERS, POLES AND STANDS

Not Applicable.

G403006 TV CAMERAS AND MONITORS

Not Applicable.

G403007 ELECTRONIC SECURITY SYSTEMS (ESS)

Not Applicable.

G403008 OTHER COMMUNICATION AND ALARM

Not Applicable.

G403009 GROUNDING SYSTEMS

Provide a complete grounding system for all site communications and security systems.

G4090 OTHER SITE ELECTRICAL UTILITIES

-- End of Section --

THIS PAGE HAS BEEN INTENTIONALLY LEFT BLANK

PART FOUR - PERFORMANCE TECHNICAL SPECIFICATIONS

THIS PAGE HAS BEEN INTENTIONALLY LEFT BLANK

SECTION A10

FOUNDATIONS
02/11

A10 GENERAL

RFP Part 3 including the Engineering System Requirements (ESR) provide project specific requirements. The RFP Part 4, Performance Technical Sections (PTS) provide generalized technical requirements that apply to multiple facility types and include more requirements than are applicable to any one project. Therefore, only the RFP Part 4 requirements that apply to the project and further define the RFP Part 3 project specific requirements are required.

A10 1.1 DESIGN GUIDANCE

Provide the design and installation in accordance with the following references. This Performance Technical Specification (PTS) adds clarification to the fundamental requirements contained in the following Government Standards. The general requirements of this PTS section are located in PTS Section Z10, *General Performance Technical Specification*.

A10 1.1.1 Government Standards

UNIFIED FACILITIES CRITERIA (UFC)

UFC 1-200-01	General Building Requirements(A reference in this PTS section to UFC 1-200-01 requires compliance with the Tri-Service Core UFCs that are listed in UFGS Section 01 33 10.05 20, which includes the following significant UFC(s):UFC 3-101-01, ArchitectureUFC 3-220-01N, Geotechnical Engineering Procedures for Foundation Design of Buildings and StructuresUFC 3-301-01, Structural Engineering)

UNIFIED FACILITIES GUIDE SPECIFICATIONS (UFGS)

UFGS Section 31 23 00.00Excavation and Fill
20

A10 1.2 GENERAL REQUIREMENTS

A10 1.2.1 Earthwork

The Designer of Record shall prepare the following UFGS Specification as part of the project specification and shall include the prepared specification section in the design submittal for the project:

A10 1.2.2 Geotechnical Report

A10 1.2.2.1 Subsurface Soils Information

Any provided subsurface soil information is included for the contractor’s information only, and is not guaranteed to fully represent all subsurface conditions. The data included in this RFP is to assist in proposal preparation. Contractor shall perform, at his expense, such subsurface exploration, investigation, testing, and analysis as his Designer of Record deems necessary for the design and construction of the foundation system.

A10 1.2.2.2 Contractor-provided Geotechnical Engineer

The Contractor is required to retain a Geotechnical Engineer experienced and licensed in the geographic region of the project to interpret any provided data as related to his design concept and develop requirements for bidding. Requirements stated in Parts 3 and 4 of the RFP take precedence over any content of any included geotechnical report. Additional requirements for the geotechnical design of this project are provided elsewhere in this RFP.

All work by the Contractor-provided Geotechnical Engineer at the project location shall be coordinated with the Contracting Officer and shall not interfere with normal base operations. When providing the Foundation Work Design submittal, provide the Contractor's Geotechnical Report (an Adobe Acrobat PDF version on CD and two printed copies) for review and record keeping purposes. The report shall become the property of the Government. Provide the Geotechnical reports generated during construction, such as pile load tests or PDA results, pile driving results and analysis, to the Contracting Officer (an Adobe Acrobat PDF version and two printed copies) for record keeping purposes.

A10 1.2.2.3 Contractor-Provided Geotechnical Report

Submit a written Geotechnical report based upon Government-provided subsurface investigation data and all additional field and laboratory testing accomplished at the discretion of the Contractor's Geotechnical Engineer. The Geotechnical Report shall include the following:

a. The project site description, vicinity map and site map indicating the location of borings and any other sampling locations. Provide 24 hour groundwater observations for at least 20% of the borings, minimum one boring. Provide notes explaining any abbreviations or symbols used and describing any special site preparation requirements.
b. Results of all applicable field and laboratory testing, whether Government or Contractor-provided. Address

existing subsurface conditions, selection and his design of the foundation and floor slab, all underground construction including utility installation and all other site-specific requirements (such as soil stabilization and slope stability).

c. Engineering analysis, discussion and recommendations addressing:

1) Settlement analysis. Settlement shall be limited as required in EM 1110-1-1904, *Settlement Analysis*

2) Bearing Capacity Analysis.

3) Foundation selection and construction considerations (shallow, deep, special); dimensions, and installation procedures.

4) Site preparation (earthwork procedures and equipment), compaction requirements, building slab preparation (as applicable), soil sensitivity to weather and equipment, groundwater influence on construction, mitigation of expansive soils or liquefaction potential, dewatering requirements, slope stability, and other necessary instructions.

5) Sheeting and shoring considerations, as applicable

6) Pavement design calculations with parameters defined, actual or assumed, and recommended thicknesses and materials, whether for design or for proposed modifications to the RFP provided pavement design

7) Haul routes and stockpile locations for earthwork, as applicable.

8) Calculations to support conclusions and recommendations.

9) Recommendations shall be presented on a structure-by-structure Basis.

The Geotechnical Report shall be signed by the Contractor-provided Geotechnical Engineer.

The submitted report shall be accompanied by a cover letter identifying any report recommendations of the report proposed to be adopted into the design which are interpreted by the Contractor as a change condition to the Geotechnical or Pavement related requirements of the RFP.

A10 1.2.2.4 Geotechnical Site Data required in Design Drawings

The Contractor's final design drawings shall include the Government-provided subsurface data presented in the RFP as noted below, as well as all additional borings and laboratory test data results performed by the Contractor. The data provided shall include:

a. Logs of Borings and related summary of laboratory test results and groundwater observations. Provide 24-hour groundwater observations for at least 20% of the borings, minimum one boring. Provide notes explaining any abbreviations or symbols used and describing any special site preparation requirements.
b. The locations of all borings shall be indicated on the drawings. The applicable design drawings shall be revised to reference the Contractor’s Geotechnical Report as being a basis for design.

A10 1.2.3 Pile Driver Analyzer (PDA)

If deemed necessary by the Designer-of-Record's geotechnical engineer, the dynamic wave equation method of analysis, pile driver analyzer, shall be used to validate pile and pile hammer compatibility, establish pile driving criteria, establish terminal penetration resistance, or verify as-driven capacity of the pile. The PDA or static load test(s) shall be required for piles with required allowable design capacity equal to or greater than 40 tons.

A10 1.3 PERFORMANCE VERIFICATION AND ACCEPTANCE TESTING

Verification of satisfactory construction and system performance of the foundations shall be via Performance Verification Testing, and by field inspection, as detailed in this section of the RFP and in UFGS Section 01 45 00.05 20. Provide special tests and special inspections in accordance with UFGS Section 01 45 00.05 20, *Design and Construction Quality Control*.

A10 1.3.1 Earthwork

Perform quality assurance for earthwork in accordance with IBC Chapter 17 and UFGS Section 31 23 00.00 20. A competent person, as defined by COE EM 385-1-1, under supervision of a registered Professional Engineer is required to provide inspection of excavations and soil/groundwater conditions throughout construction. The Engineer shall be responsible for performing periodic site visits throughout construction to assess site conditions. The Engineer, with the concurrence of the contractor and the Contracting Officer, shall update the excavation, sheeting, shoring, and dewatering plans as construction progresses to reflect actual site conditions and shall submit the updated plan and a written report (with professional stamp) at least monthly informing the Contractor and the Contracting Officer of the status of the plan and an accounting of Contractor adherence to the plan; specifically addressing any present or potential problems. The Engineer shall be available to meet with the Contracting Officer at any time throughout the contract duration.

A10 1.3.2 Piles

If piles are required, perform quality assurance for pile construction in accordance with UFC 1-200-01, *General Building Requirements*. Pile installation procedures and installed piles shall be inspected and found to be in compliance with these specifications prior to acceptance of the work.

Install test piles as directed by the Contractor's Geotechnical Engineer. Pile load tests, if required, shall be performed in accordance with UFC 1-200-01. Test pile installation procedures shall be as directed by the Contractor's Geotechnical Engineer. Results of the pile test program and final pile installation criteria shall be submitted to the Contracting Officer prior to installation of the production piles. If deemed necessary by the Designer-of-Record's Geotechnical Engineer, the dynamic wave equation method of analysis, pile driver analyzer, shall be used to validate pile and pile hammer compatibility, establish pile driving criteria, establish terminal penetration resistance, or verify as-driven capacity of the pile. The PDA or static pile load test (ASTM D 1143) shall be required for piles with an allowable design capacity equal to or greater than 40 tons. When required, perform PDA on all indicator or test piles. Perform CAPWAP analysis on at least one test (indicator) pile to determine capacity with a minimum three day set-up and develop pile installation criteria.

A10 1.4 DESIGN SUBMITTALS

Design submittals shall be in accordance with Z10, *General Performance Technical Specifications*, UFGS section 01 33 10.05 20, *Design Submittal Procedures*, UFC 1-300-09N, *Design Procedures,*UFC 3-220-01N, *Geotechnical Engineering Procedures for Foundation Design of Buildings and Structures, and UFC 1-200-01, General Building Requirements*.

UFGS sections listed below or in the body of the PTS text are to be used by the Designer of Record (DOR) as a part of the design submittal. The DOR shall edit these referenced UFGS sections and submit them as a part of the design submittal specification. Edit the specification sections in accordance with the limitations stated in PTS section Z10, *General Performance Technical Specifications*.

UFGS Section 31 23 00.00 20 *Excavation and Fill*

A10 1.5 CONSTRUCTION SUBMITTALS

Submit construction submittals in accordance with PTS Section Z10, *General Performance Technical Specifications*. In addition to the Z10 requirements, the Designer of Record (DOR) shall approve the following submittals as a minimum:

All structural elements necessary for construction

Contractor-provided geotechnical report

Controlled fill or backfill material tests

Test pile and production pile installation records

Pile load testing reports

As-Built drawings - Include a statement on the drawings indicating the method used to verify the allowable design capacity of the piles (load tests or PDA).

A1010 STANDARD FOUNDATIONS

A1010 1.1 SHEETING AND SHORING

Provide sheeting and shoring as required. Sheeting and shoring plans shall be signed by the Contractor's Geotechnical Engineer.

A1010 1.2 TERMITE CONTROL

A1010 1.2.1 Termite Control Barrier System

Formulate and apply termiticide in accordance with the manufacturer's label directions. The termiticide label shall bear evidence of registration by the U.S. Environmental Protection Agency or appropriate requirements of the host country.

Apply termiticide to the soil that will be covered by or lie immediately adjacent to the building(s) and structure(s), providing a protective barrier against subterranean termites.

Maintain the Pest Management Maintenance Record, DD Form 1532-1 and submit the Pest Management Report, DD Form 1532 as required.

Applicator(s) shall be licensed or certified by the Federal government or the state or the host country, as applicable.

A1010 1.2.2 Warranty

Furnish a 3 year written warranty against infestations or reinfestation by subterranean termites of the buildings or building additions constructed under this contract. Perform annual inspections of the building(s) or building addition(s). If live subterranean termite infestation or subterranean termite damage is discovered during the warranty period, and building conditions have not been altered in the interim, the Contractor shall:

a. Perform treatment as necessary for elimination of subterranean termite infestation;
b. Repair damage caused by termite infestation;
c. Reinspect the building approximately 180 calendar days after the repair.

A1010 1.2.3 Visual Inspection Guide

To maintain resistance to termites, complete the system and do not disturb, penetrate or damage during the remaining contract time period. Provide Manufacturer’s Guidance for performing a visual assessment of the installed system to ensure the system provides the designed termite physical barrier.

A101001 WALL FOUNDATIONS

Provide foundation walls as required in accordance with the requirements of this section and other portions of this RFP.

A101002 COLUMN FOUNDATIONS AND PILE CAPS

Provide column foundations or pile caps and grade beams as required in accordance with the requirements of this section and other portions of this RFP.

A1020 SPECIAL FOUNDATIONS

A102001 PILE FOUNDATIONS

Where piles are required, design, install, and test piles (including sheet piles, as applicable) in accordance with UFC 1-200-01, except as noted otherwise. Provide piles in accordance with the requirements of the Contractor’s Geotechnical Engineer, and the following paragraphs.

A102001 1.1 DRIVING EQUIPMENT

Install piles (including sheet piles, as applicable) to the required tip elevation and capacity with the appropriate equipment as recommended by the Contractor's Geotechnical Engineer. Pile hammer shall be of sufficient weight and energy to suitably install piles without damage.

Drive production piles with the same hammer, cap block, and cushion materials, and using the same operating conditions as test piles, including pre-augering and spudding.

Pile driving equipment shall match the equipment assumptions on which the pile driving formulae used to determine blow counts are based.

A102001 1.2 INSTALLATION TOLERANCES

Locate the center of pile butts not more than four horizontal inches from the location indicated at cutoff elevation. Manipulation of the piles is not permitted. In addition to the stated tolerances, the clear distance between the heads of piles and the edges of pile caps shall be a minimum of five inches.

Locate top of sheet piles at cutoff elevation within 1/2 inch horizontally and 2 inches vertical of the location indicated. Manipulation of the piles is not permitted.

A variation of not more than 2 percent from the vertical for plumb piles, or not more than 4 percent from the required angle for batter piles will be permitted.

A102001 1.3 MISLOCATED AND DAMAGED PILES

Remove and replace with new piles those piles that are damaged, mislocated, or installed out of alignment tolerance or provide additional piles, installed as directed by the Contractor's Geotechnical Engineer and approved by the Contracting Officer, at no additional cost to the Government.

A102001 1.4 PILE SPACING

For cast-in-place concrete or augercast piles, provide adequate distance, as determined by the Contractor's Geotechnical/Structural Engineer, between

freshly placed concrete and other pile installation operations to avoid damage to concrete.

A102001 1.5 COATED PILES

Handle treated or coated piles so as to protect the treatment or the coating. Repair damage or defects to treatment or coating.

A102002 CAISSONS

If required, provide caissons as required in accordance with the requirements of this section and other portions of this RFP.

A102003 UNDERPINNING

If required, underpin existing construction as required in accordance with the requirements of this section and other portions of this RFP.

A102004 DEWATERING

Dewater site for foundation construction as required by soil conditions and local subsurface and surface water, including rainfall, and considering any potential adverse impact on adjacent facilities, including settlement. Dewatering requirements and methods shall be established by the Contractor’s Geotechnical Engineer, based on his subsurface exploration and investigation.

A102005 RAFT FOUNDATIONS

If required, provide a raft foundation as required to achieve the requirements of this section and other portions of this RFP and as required by the Contractor’s Geotechnical Engineer.

A102006 PRESSURE INJECTED GROUTING

If required, pressure inject grout as required in accordance with the requirements of this section and other portions of this RFP.

A1030 SLAB ON GRADE

A103001 STANDARD SLAB ON GRADE

If allowed by site conditions and recommended by the Contractor-provided Geotechnical Engineer, provide standard concrete slab on grade to meet the required loading requirement in accordance with the requirements of this section and other portions of this RFP.

Floor slab on grade shall be designed and constructed in accordance with EM 1110-1-1904, Settlement Analysis and so that any settlement of the floor slab shall not result in harmful distortion of the floor, nor vertical misalignment of the floor with other building components (such as doorways and trenches), building utilities or with pile-supported building elements. If these above conditions cannot be met, provide a pile supported slab.

A103003 TRENCHES

Trenches shall be constructed of reinforced concrete with water proof joints and seals to prevent ground water infiltration.

A103004 PITS AND BASES

Pits and bases shall be constructed of reinforced concrete with water proof joints and seals to prevent ground water infiltration.

A103005 FOUNDATION DRAINAGE

A103005 1.1 PERIMETER FOUNDATION DRAINAGE

Perimeter drainage system shall be provided to remove water away from the foundation of the facility and to be deposited in the storm sewerage system of the site. Pipe for the foundation drainage system shall be of the type specified, shall be perforated, and shall be of a size sufficient to remove water from the foundation successfully. Provide one, or a combination of more than one, of the following types of pipe:

a. Corrugated Polyethylene (PE) Drainage Pipe: ASTM F 405, heavy duty, for pipe 3 to 6 inches in diameter inclusive; ASTM F 667 for pipe 8 to 24 inches in diameter. Fittings shall be manufacturer's standard type and shall conform to the indicated specification.
b. Acrylonitrile-Butadiene-Styrene (ABS) Pipe: ASTM D 2751, with a maximum SDR of 35.
c. Polyvinyl Chloride (PVC) Pipe: ASTM F 758, Type PS 46, ASTM D 3034, or ASTM F 949 with a minimum pipe stiffness of 46 psi.

Installation shall include wrapping the pipe with filter fabric sock and careful bedding of the pipe with appropriate fill material to ensure that the pipe does not become odstructed with the bedding material.

A103090 OTHER SLAB ON GRADE

A103090 1.1 BLOCK OR BOARD PERIMETER INSULATION

Provide only thermal insulating materials recommended by manufacturer for perimeter insulation. Provide one of the board or block thermal insulations listed below conforming to the following standards:

a. Cellular Glass: ASTM C 552
b. Extruded Preformed Cellular Polystyrene: ASTM C 578

The thickness of insulation and thermal resistance value shall be sufficient to meet the applicable building code and energy budget for the facility.

-- End of Section --

THIS PAGE HAS BEEN INTENTIONALLY LEFT BLANK

SECTION A20

BASEMENT CONSTRUCTION
11/10

A20 GENERAL

RFP Part 3 including the Engineering System Requirements (ESR) provide project specific requirements. The RFP Part 4, Performance Technical Sections (PTS) provide generalized technical requirements that apply to multiple facility types and include more requirements than are applicable to any one project. Therefore, only the RFP Part 4 requirements that apply to the project and further define the RFP Part 3 project specific requirements are required.

A20 1.1 DESIGN GUIDANCE

Provide the design and installation in accordance with the following references. This Performance Technical Specification (PTS) adds clarification to the fundamental requirements contained in the following Government Standards. The general requirements of this PTS section are located in PTS Section Z10, *General Performance Technical Specification*.

A20 1.1.1 Government Standards

UNIFIED FACILITIES CRITERIA (UFC)

UFC 1-200-01	General Building Requirements(A reference in this PTS section to UFC 1-200-01 requires compliance with the Tri-Service Core UFCs that are listed in UFGS Section 01 33 10.05 20, which includes the following significant UFC(s):UFC 3-101-01, ArchitectureUFC 3-220-01N, Geotechnical Engineering Procedures for Foundation Design of Buildings and StructuresUFC 3-301-01, Structural Engineering)

UNIFIED FACILITIES GUIDE SPECIFICATIONS (UFGS)

UFGS Section 31 23 00.00Excavation and Fill
20

A20 1.2 GENERAL REQUIREMENTS

A20 1.2.1 Required Specifications

The Designer of Record shall utilize the following UFGS Specifications for the project specification.

Section 31 23 00.00 20, *Excavation and Fill*

A20 1.2.2 Geotechnical Report

A20 1.2.2.1 Contractor-provided Geotechnical Engineer

The Contractor-provided Geotechnical Engineer is required to be experienced with soil conditions in the region where the project site is located. The geotechnical engineer shall evaluate the RFP data, obtain and evaluate all additional data as required to support the design and construction, and prepare a Geotechnical Report.

A20 1.2.2.2 Subsurface Soils Information

Subsurface soil information, if provided, is included for the contractor’s information only, and is not guaranteed to fully represent all subsurface conditions. The data included in this RFP are intended for proposal preparation and preliminary design only. Contractor shall perform, at his expense, such subsurface exploration, investigation, testing, and analysis as his Designer of Record deems necessary for the design and construction of the foundation system.

All work by the Contractor-provided Geotechnical Engineer at the project location, if required, shall be coordinated with the Contracting Officer and shall not interfere with normal base operations. Prior to the Foundation Work Design submittal, provide a Contractor Geotechnical Report (an editable Adobe Acrobat PDF version on CD and two printed copies) for review and record keeping purposes. The report shall become the property of the Government. Geotechnical reports generated during construction, such as pile driving results and analysis, shall be provided to the Contracting Officer. In addition, provide an editable Adobe Acrobat PDF version and two printed copies for record keeping purposes.

A20 1.2.2.3 Contractor-Provided Geotechnical Report

Submit a written Geotechnical report based upon Government-provided subsurface investigation data and all additional field and laboratory testing accomplished at the discretion of the Contractor's Geotechnical Engineer. The Geotechnical Report shall include the following:

a. The project site description, vicinity map and site map.
b. Results of all the field and laboratory testing, whether Government or Contractor-provided.
c. Engineering analysis, discussion and recommendations addressing:
d. Settlement
e. Bearing Capacity
f. Foundation selection and construction considerations (shallow, deep, special); dimensions, and installation procedures.
g. Site preparation (earthwork procedures and equipment), compaction requirements, building slab preparation (as

applicable), soil sensitivity to weather and equipment, and groundwater influence on construction

h. Sheeting and shoring considerations, as applicable
i. Pavement design parameters, actual or assumed, including recommended thicknesses and materials, be for design or for proposed modifications to the RFP provided pavement design only
j. Haul routes and stockpile locations for earthwork, as applicable
k. Calculations to support conclusions and recommendations
l. Recommendations shall be presented on a structure-by-structure basis

The Geotechnical Report shall be signed by a registered Geotechnical Engineer.

The submitted report shall be accomplished by a cover letter identifying any recommendations of the report proposed to be adopted into the design which are interpreted by the Contractor as either conflicting with or being modifications to the Geotechnical or Pavement related requirements of the RFP.

A20 1.2.2.4 Geotechnical Site Data required in Design Drawings

The Contractor's final design drawings shall include the Government-provided subsurface data presented in the RFP as noted below, as well as any additional borings and laboratory test result data performed by the Contractor.

a. Logs of Borings and related summary of laboratory test results and groundwater observations.
b. The locations of all borings shall be indicated on the drawings. The applicable design drawings shall be revised to reference the Contractor’s Geotechnical Report as being a basis for design.

A20 1.3 PERFORMANCE VERIFICATION AND ACCEPTANCE TESTING

Verification of satisfactory construction and system performance shall be via Performance Verification Testing, as detailed in this section of the RFP. Provide special tests and special inspections in accordance with UFGS Section 01 45 00.05 20, *Design and Construction Quality Control*.

A20 1.3.1 Earthwork

Perform quality assurance for earthwork in accordance with IBC Chapter 17 and UFGS Section 31 23 00.00 20. If a registered Professional Engineer is required to provide inspection of excavations and soil/groundwater conditions throughout construction, the Engineer shall be responsible for performing pre-construction and periodic site visits throughout construction to assess site conditions. The Engineer, with the concurrence of the contractor and the Contracting Officer, shall update the excavation, sheeting, shoring, and dewatering plans as construction progresses to reflect actual site conditions and shall submit the updated plan and a written report (with professional stamp) at least monthly informing the Contractor and the

Contracting Officer of the status of the plan and an accounting of Contractor adherence to the plan; specifically addressing any present or potential problems. The Engineer shall be available to meet with the Contracting Officer at any time throughout the contract duration. The contractor shall bear all costs of the Engineer.

A20 1.4 DESIGN SUBMITTALS

Design Submittals shall be in accordance with Z10, General Performance Technical Specifications, UFGSS section 01 33 10.05 20, *Design Submittal Procedures*, UFC 1-300-09N, *Design Procedures*, UFC 3-301-01, *Structural Engineering*, and UFC 3-220-01N, *Geotechnical Engineering...Structures*.

In addition, UFGS sections listed below or in the body of the PTS text are to be used by the Designer of Record (DOR) as a part of the design submittal. If the UFGS products or systems are applicable to the project, the DOR shall edit these referenced UFGS sections and submit them as a part of the design submittal specification. Edit the specification sections in accordance with the limitations stated in PTS section Z10, *General Performance Technical Specifications*.

UFGS 31 23 00.00 20 (02315N), *Excavation and Fill*

A20 1.5 CONSTRUCTION SUBMITTALS

Submit construction submittals in accordance with PTS Section Z10, *General Performance Technical Specifications*. In addition to the Z10 requirements, the Designer of Record (DOR) shall approve the following submittals as a minimum:

Contractor-provided geotechnical report

Controlled fill or backfill material tests

All structural elements necessary for construction

A2010 BASEMENT EXCAVATION

A201001 EXCAVATION FOR BASEMENTS

Excavate for the basement as required in accordance with the requirements of this section and other portions of this RFP.

A201002 STRUCTURE BACKFILL AND COMPACTION

Provide backfill and soil compaction as required in accordance with the requirements of this section and other portions of this RFP.

A201003 SHORING

Provide shoring and sheeting as required in accordance with the requirements of this section and other portions of this RFP. Shoring and sheeting plans shall be signed by the Contractor's Geotechnical/Structural Engineer.

A2020 BASEMENT WALLS

A202001 BASEMENT WALL CONSTRUCTION

Provide basement walls as required in accordance with the requirements of this section and other portions of this RFP.

A202002 MOISTURE PROTECTION

A202002 1.1 BUILT-UP BITUMINOUS WATERPROOFING

A202002 1.1.1 Environmental Conditions

Apply the primers and waterproofing specified herein when the ambient temperature is above 40 degrees F.

A202002 1.1.2 Liquid Asphalt

Deliver bulk liquid asphalt in fully insulated, heated transport tanker vehicles with circulating pump devices. Maintain the temperature of the liquid asphalt between 400 and 450 degrees F during storage, provided the transport and storage time does not exceed 12 hours. If the transport and storage time exceeds 12 hours, lower the temperature to between 300 and 325 degrees F at the time the 12 hours are exceeded. Liquid asphalt shall be used within 36 hours after loading in the transport tanker.

A202002 1.1.3 Materials

a. Bitumen - Asphalt; ASTM D 449, Type I.
b. Bituminous Plastic Cement - ASTM D 4586, Type I for asphalt.
c. Membrane Fabric

The following requirements shall apply:

Felt or Fabric Material	Saturant or Impregnant	Specification
Glass (felt) mat	Asphalt	ASTM D 2178, Type III
Reinforcing glass fabric	Asphalt	ASTM D 1668, Type I

d. Nails - Galvanized roofing nails.
e. Primer - ASTM D 41 for asphalt.
f. Protection Board - ASTM D 517, plain, asphalt plank; ASTM C 208, construction grade building board, 1/2 inch thick, asphalt saturated or coated; ASTM C 726, 7/16 inch thick, covered on one side with waterproof paper or asphalt-saturated felt.

A202002 1.2 ELASTOMERIC SHEET WATERPROOFING

A202002 1.2.1 Environmental Conditions

Do not apply waterproofing during inclement weather or when there is ice, frost, surface moisture, or visible dampness on the surface to receive waterproofing and when ambient and surface temperatures are 40 degrees F or below. The restriction on the application of

waterproofing materials when ambient and surface temperatures are below 40 degrees F will be waived if the Contractor devises a means, approved by the Contracting Officer, of maintaining the surface and ambient temperatures above 40 degrees F.

A202002 1.2.2 Butyl Rubber Sheeting

Not less than 60 mils minimum thickness.

A202002 1.2.2.1 Butyl Rubber Sheeting Performance Requirements

a. Thickness Tolerance, ASTM D 412: Plus or minus 10 percent;
b. Specific Gravity, ASTM D 297: 1.20, plus or minus 0.05;
c. Tensile Strength, ASTM D 412: 1200 psi minimum;
d. Tensile Stress at 300 percent elongation, ASTM D 412: 600 psi minimum;
e. Elongation, ASTM D 412: 300 percent minimum;
f. Tear Resistance, Die C, ASTM D 624: 125 pound force per inch (lbf/inch) minimum;
g. Shore A Hardness, ASTM D 2240: Five-second interval before reading; 60 plus or minus 10;
h. Ozone Resistance, ASTM D 1149: No cracks, 7 days - 50 pphm - 100 degrees F, 20 percent elongation;
i. Heating Aging-Accelerated, ASTM D 573: Tensile retention, 60 percent of minimum original elongation retention; 60 percent of minimum original requirement; 7 days, 240 degrees F.
j. Butyl Identification, ASTM D 471, Tricresyl Phosphate Immersion: Maximum volume swell 10 percent, 70 hrs, 212 degrees F;
k. Low Temperature Flexibility, ASTM D 746: No failure at -40 degrees F;
l. Water Absorption, ASTM D 471: +1 percent maximum. 7 days, 158 degrees F;
m. Exposure to Fungi and Bacteria in Soil, Minimum 16 Weeks: Unaffected; and
n. Water Vapor Transmission, 80 Degrees F Permeance, ASTM E 96, Procedure B or BW: 0.15 perms maximum.

A202002 1.2.2.2 Adhesive, Cement, and Tape for Use with Butyl Rubber

Provide as recommended by the butyl rubber waterproofing membrane manufacturer.

A202002 1.2.3 Composite, Self-Adhering Membrane Sheeting

Cold applied composite sheet consisting of rubberized asphalt and cross laminated, high-density polyethylene film. Not less than 60 mils minimum thickness is required.

A202002 1.2.3.1 Composite, Self-Adhering Sheeting Performance Requirements

a. Tensile Strength, ASTM D 412, Die C: 250 psi minimum;

b. Ultimate Elongation, ASTM D 412, Die C: 200 percent minimum;
c. Water Vapor Transmission, ASTM E 96 80 Degrees F Permeance, Procedure B: 0.1 perm maximum;
d. Pliability Degrees F, ASTM D 146: (180 Degrees Bend Over One Inch Mandrel): No cracks at minus -25 degrees F;
e. Cycling Over Crack at Minus 15 Degrees F: Membrane is applied and rolled across two primed concrete blocks with no separation between blocks. Crack opened and closed from zero to 1/4 inch. No effect at 100 cycles;
f. Puncture Resistance, ASTM E 154: 40 lb. minimum;
g. Lap Adhesion at Minimum Application Temperature, ASTM D1876 Modified, 5 lbs/in.(880 N/m);
h. Peel Strength, ASTM D 903: Modified, 9 lbs/in;
i. Resistance to Hydrostatic Head, ASTM D 5385: 231 ft of water
j. Water Absorption, ASTM D 570; 0.1% maximum.

A202002 1.2.3.2 Primer

Asphalt composition, ASTM D 41, or synthetic polymer in solvent as recommended by the membrane manufacturer.

A202002 1.2.3.3 Mastic

Polymer modified asphalt in suitable solvent of trowel-grade consistency and as recommended by the membrane manufacturer.

A202002 1.2.4 Protection Board

Three-dimensional, high impact resistant polymeric grid with woven monofilament drainage fabric bonded to the grid.

A202003 BASEMENT WALL INSULATION

A202003 1.1 BLOCK OR BOARD INSULATION

Provide only thermal insulating materials recommended by manufacturer for the indicated application. Provide one of the board or block thermal insulations listed below conforming to the following standards:

a. Cellular Glass: ASTM C 552
b. Extruded Preformed Cellular Polystyrene: ASTM C 578
c. Unfaced Preformed Rigid Polyurethane and Polyisocyanurate Board: ASTM C 591
d. Faced Rigid Cellular Polyisocyanurate and Polyurethane Insulation: ASTM C 1289
e. Type I Aluminum Foil on both major surfaces. Class 1 - Non-reinforced core foam.

A202003 1.2 BLANKET INSULATION

ASTM C 665, Type I, blankets without membrane coverings; with a thermal resistance value, which will be sufficient to meet the applicable building

code and energy budget for the facility. The insulation material shall not contain asbestos materials.

A202003 1.2.1 Recycled Materials

Provide Thermal Insulation containing recycled materials to the extent practicable, provided the material meets all other requirements of this section. The minimum required recycled materials content by weight are:

Rock Wool: 75 percent slag

Fiberglass: 20 to 25 percent glass cullet

A202004 INTERIOR SKIN

Comply with Section C30, *Interior Finishes*.

-- End of Section --

SECTION B10

SUPERSTRUCTURE
11/10

B10 GENERAL

RFP Part 3 including the Engineering System Requirements (ESR) provide project specific requirements. The RFP Part 4, Performance Technical Sections (PTS) provide generalized technical requirements that apply to multiple facility types and include more requirements than are applicable to any one project. Therefore, only the RFP Part 4 requirements that apply to the project and further define the RFP Part 3 project specific requirements are required.

B10 1.1 DESIGN GUIDANCE

Provide the design and installation in accordance with the following references. This Performance Technical Specification (PTS) adds clarification to the fundamental requirements contained in the following Government Standards. The general requirements of this PTS section are located in PTS Section Z10, *General Performance Technical Specification*.

B10 1.1.1 Government Standards

UFC 1-200-01	General Building Requirements(A reference in this PTS section to UFC 1-200-01 requires compliance with the Tri-Service Core UFCs that are listed in UFGS Section 01 33 10.05 20, which includes the following significant UFC(s):UFC 3-101-01, ArchitectureUFC 3-301-01, Structural Engineering)
UFC 4-023-03	Design of Buildings to Resist Progressive Collapse

B10 1.2 PERFORMANCE VERIFICATION AND ACCEPTANCE TESTING

Verification of satisfactory construction and system performance shall be via Performance Verification Testing, as detailed in this section of the RFP. Provide special tests and special inspections in accordance with UFGS Section 01 45 00.05 20, *Design and Construction Quality Control*.

B10 1.3 DESIGN SUBMITTALS

Design submittals shall be in accordance with Z10, General Performance Technical Specifications, UFGS section 01 33 10.05 20, *Design Submittal Procedures*, UFC 1-300-09N, *Design Procedures*, UFC 3-100-10N, *Architecture*, and UFC 3-301-01, *Structural Engineering*.

B10 1.4 CONSTRUCTION SUBMITTALS

Submit construction submittals in accordance with PTS Section Z10, *General*

Performance Technical Specifications. In addition to the Z10 requirements, the Designer of Record (DOR) shall approve the following submittals as a minimum:

All structural elements necessary for construction of the superstructure.

B1010 FLOOR CONSTRUCTION

B101001 STRUCTURAL FRAME

Structural frame elements may include columns, girders, beams, trusses, joists, moment frames, shear walls, and bracing. See Section B20, *Exterior Enclosure*, for additional requirements for exterior walls used as load-bearing walls or shear walls.

B101002 STRUCTURAL INTERIOR WALLS

Provide structural interior walls as required in accordance with the requirements of this section and other portions of this RFP. See Section C10, *Interior Construction*, for additional requirements.

B101003 FLOOR DECKS AND SLABS

If required, provide floor decks as required in accordance with the requirements of this section and other portions of this RFP.

B101005 BALCONY CONSTRUCTION

Design and construct exterior balconies to drain and with the top of the balcony high-point below the interior floor elevation as required for flashing.

B101006 RAMPS

Provide ramps as required in accordance with the requirements of this section and other portions of this RFP.

B101007 FLOOR RACEWAY SYSTEMS

See Section D50, Electrical, for floor raceway systems.

B1020 ROOF CONSTRUCTION

B102001 STRUCTURAL FRAME

Structural frame elements may include columns, girders, beams, trusses, joists, moment frames, shear walls, and bracing. See Section B20, *Exterior Enclosure*, for additional requirements for exterior walls used as load-bearing walls or shear walls.

B102002 STRUCTURAL INTERIOR WALLS

Provide structural interior walls as required in accordance with the requirements of this section and other portions of this RFP. See Section C10, *Interior Construction*, for additional requirements.

B102003 ROOF DECKS AND SLABS

Provide roof deck as required in accordance with the requirements of this section and other portions of this RFP.

B102004 CANOPIES

Provide canopies as required in accordance with the requirements of this section and other portions of this RFP.

-- End of Section --

THIS PAGE HAS BEEN INTENTIONALLY LEFT BLANK

SECTION B20

EXTERIOR ENCLOSURE
11/10

B20 GENERAL

RFP Part 3 including the Engineering System Requirements (ESR) provide project specific requirements. The RFP Part 4, Performance Technical Sections (PTS) provide generalized technical requirements that apply to multiple facility types and include more requirements than are applicable to any one project. Therefore, only the RFP Part 4 requirements that apply to the project and further define the RFP Part 3 project specific requirements are required.

B20 1.1 DESIGN GUIDANCE

Provide the design and installation in accordance with the following references. This Performance Technical Specification (PTS) adds clarification to the fundamental requirements contained in the following Government Standards. The general requirements of this PTS section are located in PTS Section Z10, *General Performance Technical Specification*.

Industry standards, codes, and Government standards referenced in the section text that are not found in the Unified Master Reference List (UMRL) in the Construction Criteria Base (CCB) at the Whole Building Design Guide Website , are listed below for basic designation identification. Comply with the required and advisory portions of the current edition of the referenced standard at the time of contract award.

B20 1.1.1 Industry Standards and Codes

NATIONAL LUMBER GRADES AUTHORITY (NLGA)

B20 1.1.2 Government Standards

Military Handbook 1013/1A, Design Guidance for Physical Security of Facilities

UNIFIED FACILITIES CRITERIA (UFC)

UFC 1-200-01	General Building Requirements(A reference in this PTS section to UFC 1-200-01 requires compliance with the Tri-Service Core UFCs that are listed in UFGS Section 01 33 10.05 20, which includes the following significant UFC(s):UFC 3-101-01, Architecture)

B20 1.2 PERFORMANCE VERIFICATION AND ACCEPTANCE TESTING

Verification of satisfactory exterior enclosure system performance shall be via Performance Verification Testing, and by field inspection as detailed in this section of the RFP. Provide special tests and special inspections

in accordance with UFGS Section 01 45 00.05 20, *Design and Construction Quality Control*. The Contractor shall pay the cost of all testing.

B20 1.2.1 Required Brick Masonry Testing and Field Samples

a. Where field testing is required, masonry strength shall be determined in accordance with ACI 530.1.

b. Field Samples: Masonry Panel Requirements - At the job site submit for approval by the Designer of Record, a sample masonry panel minimum 8 feet (2.4 meters) long by a minimum of 4 feet (1.2 meters) high. Actual Sample size will be determined by number of components in the sample wall but provide a span of at least 4 feet (1.2 meters) of uninterrupted brickwork and 2 feet (.6 meters) above wall openings. The approved sample shall exhibit the standard for workmanship and materials for the project. The sample panel shall include brick coursing, bond, weep holes, flashing, thickness, anchors, joint reinforcing, wall ties, rigid-board insulation, intersection of walls, bond beams, expansion and control joints, and tooling of joints, range of color, texture of masonry, and mortar color; or cold-formed steel framing, insulation, fiberglass-faced gypsum sheathing, air barrier, air barrier connections to adjoining construction, sealing of air barrier penetrations vapor barrier, sealant, masonry ties and anchors, and tooling of joints, the range of color and texture of brick veneer, and the color of mortar. The sample panel shall be protected from damage and shall remain at the site until masonry work is complete and approved, at which time the panel shall be removed from the site. If there are windows or curtain walls in the project which interface with the masonry, a cut-away sample window or curtain wall mock-up shall be installed in the masonry field panel, with all accessories, finishes, and trim (see B20 1.2.4 and 1.2.5). Masonry work shall match the approved sample.

B20 1.2.2 Air Barrier Field Sample

Designate a portion of the project that reveals the various edge, seam, transition, and penetration conditions that the air barrier is exposed to. Determine this location with the Contracting Officer and obtain approval of the sealing methods employed on the project from the air barrier Manufacturer. Leave sample area exposed to view as long as practical to serve as a construction standard and comparison of future air barrier construction on the project. Before construction covers the sample area, provide detailed photographs of the air barrier details for future reference.

[B20 1.2.3 Air Barrier Performance Testing

If required in RFP Part 3, provide air barrier testing and repair as follows:

a. Provide a testing plan as a part of the Commissioning Plan and notify the Contracting Officer 7 working days before the testing will take place. Do not test the building until verifying that the continuous air barrier is in place and installed without failures in accordance with installation instructions so that repairs to the

continuous air barrier, if needed to comply with the required air leakage rate, can be done in a timely manner.

Also coordinate building access during the test with the Contracting Officer. Perform pretest inspection with all parties involved in the test and possible repairs of the building envelope. Record pretest conditions and utilize pictures to assist in the documentation.

b. Air leakage test shall be performed in accordance with ASTM E-779 (2003) or E-1827-96 (2002), with the following additions and exceptions using either Method 1 or Method 2. The flow rate must not exceed 0.25 CFM at 75 Pa per square foot of building envelope area including roof or ceiling, walls and floor as provided by the DOR.

Method 1: This test consists of measuring the flow rates required to establish 12 positive and 12 negative building pressures from at least 25 Pa to at least 50 Pa. At least 12 bias pressure readings must be taken across the envelope and averaged over 5 seconds each before and after the test. None of these readings must exceed 30% of the minimum test pressure.

Method 2: this test consists of measuring the flow rates required to establish 12 positive building pressures from at least 50 Pa to at least 75 Pa. At least 12 bias pressure readings must be taken across the envelope and averaged over 5 seconds each before and after the test. None of these readings must exceed 20% of the minimum test pressure.

The test results must be either pass or fail. Provide the theoretical size of the opening that leaks the same amount as the building envelope at 75 Pa, to facilitate the search for leaks and repair of the exterior enclosure.

c. Provide infrared thermography to determine air leakage paths if facility fails to retain the required air pressure in the test above. Utilize infrared cameras with a resolution of 0.1 degree C or better.

Perform infrared thermography in accordance with ISO 6781:1983 and ASTM C1060-90(1997). Determine air leakage pathways in accordance with ASTM E1186-03 *Standard Practices for Air Leakage Site Detection in Building Envelopes and Air Barrier Systems*, and perform corrective work as necessary to achieve the whole building air leakage rate specified.

Modify construction to stop identified air leakage until target 0.25 cfm/ft2 is reached. Correct air path leaks at the source of the leak, do not use sealant to close air leakage paths that are required to be opened for maintenance of the facility such as fixtures, switches covers, receptacle covers, access doors,...etc.

d. Air leaks shall be sealed in the following order of priority:

1) Top of the building. These include attics, roof/wall intersections, penthouse doors and walls, HVAC equipment.

2) Bottom of the building. These include ground floor access doors and inspection hatches, exhaust and air intake vents, service penetrations of enclosure, crawl spaces.

3) Vertical shafts. These include gasket stairwell fire doors, fire hose cabinets and recessed toilet accessories connected to vertical shaft, vertical and horizontal utility penetrations in service rooms, elevator rooms and shafts.

4) Exterior walls. These include weather strip doors and windows, exhaust fans and ducts, service penetrations, electrical receptacles, wall base.

]B20 1.2.4 Required Records for Concrete Wall Panels

a. Cast-in-place - Submit to DOR mandatory batch ticket information as ASTM C 94 for each load of ready-mixed concrete.
b. Submit to DOR commercial testing results in accordance with PCI MNL-117 and as required in paragraph entitled "Sampling and Testing for Precast"

B20 1.2.5 Precast Concrete Wall Panel Surface Finish Sample

Submit to DOR a concrete wall panel sample 12 inches (300 mm) by 12 inches (300 mm) by approximately 1 1/2 inches (38 mm) in thickness, to illustrate quality, color, and texture of both exposed-to-view surface finish and finish of panel surfaces that will be concealed by other construction. Obtain initial approval of color and texture from DOR prior to submission of sample panels.

B20 1.2.5.1 Manufacturing Plant Sampling And Testing for Precast

Plant Quality Control - PCI MNL-117 for PCI enrolled plants. Where panels are manufactured by specialists in plants not currently enrolled in the PCI "Quality Control Program," provide a product quality control system in accordance with PCI MNL-117 and perform concrete and aggregate quality control testing using an approved, independent commercial testing laboratory. Submit test results to the Contracting Officer.

a. Aggregate Tests: ASTM C 33. Perform one test for each aggregate size, including determination of the specific gravity.
b. Strength Tests: ASTM C 172. Provide ASTM C 39 and ASTM C 31/C 31M compression tests. Perform ASTM C 143 slump tests. Mold six cylinders each day or for every 20 cubic yards (15 cubic meters) of concrete placed, whichever is greater. Perform strength tests using two cylinders at 7 days and two at 28 days. Cure four cylinders in the same manner as the panels and place at the point where the poorest curing conditions are offered. Moist cure two cylinders and test at 28 days.
c. Changes in Proportions: If, the compressive strength falls below that specified, adjust the mix proportions and water content and make necessary changes in the temperature, moisture, and curing procedures to secure

the specified strength. Notify the Contracting Officer of all changes.

d. Strength Test Results: Evaluate compression test results at 28 days in accordance with ACI 214 using a coefficient of variation of 20 percent. Evaluate the strength of concrete by averaging the test results (two specimens) of standard cylinders tested at 28 days. Not more than 20 percent of the individual tests shall have an average compressive strength less than the specified ultimate compressive strength.

B20 1.2.5.2 Acceptable Appearance

Refer to *Architectural Precast Concrete*by the Prestressed Concrete Institute, in the "Acceptability of Appearance" paragraph for reasons to reject precast panels. Panels in place may be rejected for any one of the product defects or installation deficiencies remaining after repairs and cleaning have been accomplished. "Visible" means visible to a person with normal eyesight when viewed from a distance of 20 feet (6 meters) in broad daylight.

B20 1.2.6 Window Sample Mock-Up

a. Provide mock up of one (1) typical combination window unit to be used within the project and conduct a field mock-up test in strict compliance with AAMA 502 method A and method B. Each opening will be tested to achieve performance of ASCE 7-02 calculated requirements (PSF or Kg/m2) for water resistance, which shall not exceed .667 % of the products capable water based on AAMA 101/I.S. 2. Allowable rates of air leakage for field testing shall be 1.5 times applicable AAMA 101/I.S.2 rate for the Product Type and Performance Class.

b. Opening is to be tested under "Quality Control" testing by a designated independent testing agency.

1) Schedule mock up installation sufficiently in advance of need to allow adequate time for cure of sealants, testing and reconstruction, if needed, without delaying the project.

2) Build mock up in building envelope wall in location selected by Owner and Architect.

3) Modify mock up construction and perform additional tests as required to achieve specified minimum acceptable results. If corrections are not adequate, construct new mock up, at written direction of Owner and Architect. Co-ordinate construction of mock up with other involved trades.

4) Approved mock ups may become part of completed Work if undisturbed at time of Substantial Completion.

5) Flood test Mockup window subsill and obtain approval of DOR prior to installing window unit.

B20 1.2.7 Curtain Wall Systems Field Sample and Testing

a. At the job site submit for approval by the Designer of Record, a sample curtain wall installation which may be a cut-away portion of a curtain wall, if appropriate, to show the construction, the workmanship, tie-in to building, infiltration and moisture barriers, wrap, flashing, head, window unit installation where required, sill, lintel if required, interior and exterior trim, anchors and reinforcing, and sealants.

b. Provide mock up of (1) designated Curtain Wall System unit to be used in conducting a field mock-up test in strict compliance with AAMA 503 method A and method B. Each opening will be tested to achieve performance of ASCE 7-05 calculated requirements (PSF or Kg/m2) for water resistance, which shall not exceed the derived water expectation of 0 infiltration at the calculated Design Pressure. Allowable rates of air leakage for field testing shall be .30 CFM/Ft2 of wall area test specimen. Performance test at 6.24 PSF (30.3 Kg/m2) allows .30 cfm/ft2. Opening is to be tested under "Quality Control" testing by a designated independent testing agency.

1) Schedule mock up installation sufficiently in advance of need to allow adequate time for cure of sealants, testing and reconstruction, if needed, without delaying the project.

2) Build mock up in building envelope wall in location selected by DOR.

3) Modify mock up construction and perform additional tests as required to achieve specified minimum acceptable results. If corrections are not adequate, construct new mock up, at written direction of DOR. Co-ordinate construction of mock up with other involved trades.

4) Approved mock ups may become part of completed Work if undisturbed at time of Substantial Completion.

The sample curtain wall shall be protected from damage and shall remain at the site until curtain wall construction work is complete and approved, at which time the panel shall be removed from the site. On projects where the curtain wall interfaces with masonry walls, a cut-away sample curtain wall shall be installed with the masonry sample panel. Curtain wall installations shall match the approved sample.

Water Penetration: No water penetration shall occur when the wall is tested in accordance with ASTM E 331 at a differential static test pressure of 20 percent of the inward acting design wind pressure as specified, but not less than 15 psf (80 Kg/m2). Make provision in the wall construction for adequate drainage to the outside of water leakage or condensation that occurs within the outer face of the wall. Leave drainage and weep openings in members and wall open during test.

B20 1.3 DESIGN SUBMITTALS

Design submittals shall be in accordance with Z10, *General Performance Technical Specifications*, UFGS section 01 33 10.05 20, *Design Submittal*

Procedures, UFC 1-300-09N, *Design Procedures*, UFC 3-100-10N, *Architecture*and UFC 3-301-01, *Structural Engineering*.

In addition, UFGS sections listed below or in the body of the PTS text are to be used by the Designer of Record (DOR) as a part of the design submittal. If the UFGS products or systems are applicable to the project, the DOR shall edit these referenced UFGS sections and submit them as a part of the design submittal specification. Edit the specification sections in accordance with the limitations stated in PTS section Z10, *General Performance Technical Specifications*.

UFGS 08 34 16.10, *Steel Sliding Hangar Door*

UFGS 08 34 16.20, *Vertical Lift Fabric Door*

B20 1.4 CONSTRUCTION SUBMITTALS

Submit construction submittals in accordance with PTS Section Z10, *General Performance Technical Specifications*. In addition to the Z10 requirements, the Designer of Record(DOR) shall approve the following submittals as a minimum;

Shop drawings for reinforcing steel in masonry walls, doors, door hardware, windows, storefront, curtainwall, glazing, paint, air barrier system, and visible exterior materials.

All structural elements necessary for construction.

B20 1.4.1 Manufacturer's Verification Inspection Documentation for Galvanized Steel

Manufacturer's verification inspection documentation shall be submitted for all galvanized steel in accordance with ASTM A123, ASTM A 153, and ASTM A 653.

B20 1.4.2 Field Inspection of Field-erected Concrete Panels

a. Perform field inspection of panel welded connections. Furnish the services of AWS-certified welding inspector for erection inspections. Welding inspector shall visually inspect all welds and identify all defective welds.
b. The DOR shall be notified in writing of defective welds, bolts, nuts and washers within 7 working days of the date of inspection. All defective connections or welds shall be removed and re-welded or repaired as required by the DOR.

B2010 EXTERIOR WALLS

Exterior wall construction shall consist of exterior skin system of non-structural outside face elements with rain-screen back-up wall systems including; flashing (embedded, exposed, and thru-wall), vapor barriers, air barriers, and insulation systems with interior skin system materials to provide a protective finish on the

inside face of exterior walls. Provide all components necessary to direct water that would leak through faulty caulk joints to the outside of wall. Provide flashing, window subsill, caulking, and water barriers around wall openings to direct any water that gets behind the outside surface of the exterior door, window or louver to the exterior of the wall.

All work shall be designed to comply with UFC 3-100-10N, *Architecture*, and UFC 3-301-01, *Structural Engineering*, and the following requirements:

a. Vapor Transmission Analysis - Perform a job specific vapor transmission analysis in accordance with UFC 3-100-10N, Architecture. The conclusion of the analysis shall indicate the appropriate locations of needed vapor retarders, air barriers, and anticipated dew-point locations in the exterior enclosure during different critical times of the year.
b. Wind Loads - Provide wind load calculations for exterior cladding in accordance with UFC 1-200-01 and UFC 3-301-01 with comparative analysis of the cladding system to be provided.
c. Water Penetration - No water penetration shall occur at a pressure of 8 psf (39 Kg/m2) of fixed area when tested in accordance with ASTM E 331.
d. Insulating Value – The complete wall system shall have a minimum insulating value as required by the building code and as required to meet ASHRAE Standard 90.1 as modified by the Energy Policy Act of 2005.

B201001 EXTERIOR CLOSURE

B201001 1.1 MASONRY VENEER EXTERIOR WALL CLOSURE COMPONENTS

B201001 1.1.1 General Requirements

a. Masonry veneer shall include load bearing and non-load bearing exterior walls of the structure, and shall include colored mortar, special shapes such as sills, headers, trim units and copings of brick masonry, precast concrete, concrete masonry units, or other approved material. The veneer shall be tied to the backup wall system with a system that allows the veneer to move independently of the backup wall system, while being structurally supported. The masonry veneer shall allow for expansion and contraction of the veneer without cracking the exterior material.
b. Use running bond, tooled concave joints and full head joint weeps at 24 inches (610 mm) o.k. in the course immediately above the base flashing. Where rowlocks are permitted, slope rowlocks and project not less than 1/2 inch (13 mm) beyond the face of the wall to form a wash and drip. Where required, provide colored mortar conforming to ASTM C270. Provide special shapes where required.
c. Locate expansion/control joints and seal with proper backing material and ASTM C 920 polyurethane sealant, or preformed foam or rubberized expansion joint closure. Conform to UFC 3-101-01 and BIA Technotes 18, 18A. Joint shall match color of the brick, unless DOR directs otherwise.
d. Conform to ACI 530.1 for masonry veneer installation, including cold weather construction. Antifreeze admixtures are not to be used.
e. Clean the masonry in accordance with manufacturer's instructions and BIA Technote 20.
f. Utilize BIA Technical Notes to design, detail, and construct

brick masonry walls. This PTS section amends the BIA documents and takes precedence over similar BIA requirements. Substitute directive language in the place of BIA suggestive language as required in PTS Section Z10, *General Performance Technical Specifications*. The results of these wording substitutions change this document to required procedures.

B201001 1.1.2 Face Brick

a. Brick Masonry Appearance - Do not change source or supply of materials after brick manufacturing work has started. Blend all brick to produce a uniform appearance when installed. An observable "banding" or "layering" of colors or textures caused by improperly mixed brick is unacceptable.
b. Brick Type – Brick shall be ASTM C216, Grade SW, type FBX. ASTM C67 test rating shall be "Not effloresced".

B201001 1.1.3 Split Faced or Ground Faced Masonry

ASTM C 90. If required, provide split faced or ground faced units, or split-ribbed units or scored-faced units.

B201001 1.1.4 Cast Stone Trim Units

a. Cast stone shall be the product of a manufacturer regularly engaged in the manufacture of architectural cast stone (precast concrete building unit) products. Cast Stone shall meet or exceed the requirements of ASTM C 1364.
b. Trim units of cast stone shall include sills, fascia, header units, copings and other trim units as required by the approved design

B201001 1.1.5 The Wall Cavity

Comply with UFC 3-101-01 and BIA Technical Notes 21A, 21B, 21C, 28B.

B201001 1.1.6 Through-Wall Flashing Components

a. Through-wall flashing with weep holes shall be incorporated in cavity wall construction as required by UFC 3-100-10N and BIA Technotes. Install flashing according to BIA Technotes 7, 7A, 7B, 21A, 21B, 21C, 28B, and SMACNA figures 4-1A and 4-1B. Extend metal drip edge flashing beyond the wall plane using a 1/4 inch (6 mm) preformed 45 degree angle turn down.
b. Flashing material shall be as required by UFC 3-101-01 and the following: Flashing shall be 7 ounce copper flashing with a 3 ounce bituminous coating on each side or a fiberglass fabric bonded on each side of the copper sheet. Sixteen (16) ounce uncoated copper, 28 gauge Type 302 or 304 stainless steel is also acceptable. 'Flexible membrane flashing, plastic or PVC-based membrane flashing is prohibited. Lap and seal turndown solid metal drip edge flashing to through- wall flashing. Refer to "Flashing" in this section to find requirements for non-through-wall flashing.

B201001 1.1.7 Reinforcing in Veneer Layer

Reinforcing in the veneer layer shall be galvanized in accordance with ASTM A 123/A123M, ASTM A153/A153M, or ASTM A653/A653M, Z275 (G90) coating, and be of sufficient size to eliminate damage to the veneer layer from wind and other live and dead loads imposed on the veneer layer.

B201001 1.2 METAL WALL PANEL EXTERIOR CLOSURE

B201001 1.2.1 General Wall Panel Requirements

a. Factory Color Finish – Panels shall have factory applied, baked coating to the exterior and interior of metal wall panels and metal accessories. Exterior finish topcoat shall be of 70 percent polyvinylidene fluoride (PVDF) resin with not less than 0.8 mil dry film thickness (DFT). Exterior primer shall be standard with panel manufacturer with not less than 0.8 mil dry film thickness (DFT). Panels shall have factory applied 70 percent PVDF clear coating of 0.8 mil DFT over the color topcoat and edge coating for projects within 300 feet (91 meters) of a water shoreline or industrial environment. Field apply 70 percent PVDF clear coat to unfinished panel edges or field cut panels. Interior finish exposed to sun or rain shall be the same coating and DFT as the exterior coating. Interior finish shall be protected from sun or rain exposure.

b. Wall system and attachments shall resist wind loads as determined by ASCE 7, with a factor of safety appropriate for the material holding the anchor. Maximum deflection due to wind on aluminum wall panels shall be 1/60. Maximum deflection due to wind on steel wall panels and girts behind aluminum or steel wall panels shall be limited to 1/120 of their respective spans, except that when interior finishes are used the maximum allowable deflection shall be limited to 1/180 of their respective spans. The structural performance test methods and requirements of the wall system and attachments shall be in accordance with ASTM E 1592.

c. Conformations - Non-insulated steel or aluminum wall panels shall have configurations for overlapping adjacent sheets or interlocking ribs for securing adjacent sheets and shall be fastened to framework using exposed or concealed fasteners, as specified. Length of sheets shall be sufficient to cover the entire height of any unbroken wall surface when the length of run is 30 feet (9 meters) or less. Design provisions shall be made for expansion and contraction. Where required, provide series 305 stainless steel fasteners factory finished to match panels.

d. Shape - Standard V-beam or boxed beam type having 5 to 8 inch (125 mm to 200 mm) pitch for steel panels or 4 to 8 inch (100 mm to 200 mm) pitch for aluminum panels, and 1.5 inch (38 mm) overall depth, exclusive of coating. Other shapes may be considered if approved by the DOR.

B201001 1.2.2 Steel Wall Panels

a. Material and Coating - Form sheets from steel conforming to ASTM A 653/A 653M, Structural Grade 40, galvanized coating conforming to ASTM A 924/A 924M, Class G-90; aluminum-coated steel conforming to SAE AMS 5036; or steel-coated with aluminum-zinc alloy conforming to ASTM A 792/A 792M, except that coating chemical composition shall be approximately 55 percent aluminum, 1.6 percent silicon, and 43.4 percent zinc with minimum coating weight of 0.5 ounce per square foot.
b. Gage - Minimum 22 U.S. Standard Gage for wall panels, but in no case lighter than required to meet maximum deflection requirements specified.

B201001 1.2.3 Aluminum Wall Panels

a. Material and Coating - Form sheets of Alloy 3004 or Alclad 3004 conforming to ASTM B 209 having proper temper to suit respective forming operations.
b. Thickness - Minimum 0.032 inch (0.81 mm) nominal, but in no case thinner than that required to meet maximum deflection requirements specified.

B201001 1.2.4 Insulated Aluminum or Steel Wall Panels

Insulated wall panels shall be steel or aluminum factory-fabricated units with insulating core between metal face sheets securely fastened together and uniformly separated with rigid spacers. Panels shall have a factory color finish. Insulation shall be compatible with adjoining materials and capable of retaining its R-value for the life of the metal facing sheets; and unaffected by extremes of temperature and humidity. The assembly shall have a flame spread rating not higher than 25, and smoke developed rating not higher than 50 when tested in accordance with ASTM E 84. Panels shall be not less than 8 inches (200 mm) wide and shall be in one piece for unbroken wall heights.

Wall panels shall have edge configurations with interlocking ribs for securing adjacent panels. System shall utilize factory fabricated corners and trim pieces at intersections with other materials. Wall panels shall be fastened to framework using concealed fasteners. Installation shall be in accordance with DOR-approved shop drawings and manufacturer’s recommendations.

a. Insulated Steel Panels - Zinc-coated steel conforming to ASTM A 653/A 653M; or Aluminum-zinc alloy coated steel conforming to ASTM A 792/A 792M, AZ 55 coating. Uncoated wall panels shall be 0.024 inch (0.61 mm) thick minimum.
b. Insulated Aluminum Panels - Alloy conforming to ASTM B209, temper as required for the forming operation, minimum 0.032 inch (0.81 mm) thick.

B201001 1.3 STUCCO EXTERIOR WALL CLOSURE

B201001 1.3.1 Portland Cement Plaster

ASTM C150, gray Portland cement Type II with 1/2 inch (13 mm) maximum

chopped alkali resistant fiberglass strands, minimum 1.5 percent by weight to cement; 1 1/2 pounds (.68 kg) per sack of cement. Lime shall conform to ASTM C206, Type S. System shall utilize stainless steel or zinc corner beads, J-beads and other accessories.

a. Unless specifically deleted, the system shall utilize an acrylic admixture or coating to give additional moisture suppression to control fungus growth.
b. Sand aggregate for job-mixed base coat and job-mixed finish coat stucco shall conform to ASTM C897.
c. Sand for Finish Coats: Natural color and graded within the limits shown above for basecoats, except that the sand shall pass the No. 8 sieve, and for smooth finish the sand shall pass the No. 30 sieve.
d. Mix scratch coat in proportion of one part by volume Portland cement, 3/4 to 1 1/2 parts by volume hydrated lime and 2 1/2 to 4 parts sand (volume of sand per sum of cement and lime). Mix brown coat in proportion of one part by volume Portland cement, 3/4 to 1 1/2 parts by volume hydrated lime and 3 to 5 parts sand (volume of sand per sum of cement and lime). Mix proportions can vary depending on climate and application variations, with the approval of the DOR.
e. Portland Cement Stucco Finish Coat 3 to 5 parts sand (volume of sand per sum of cement and lime).
f. Portland cement plaster application shall be in accordance with ASTM C 926. Furring and lath application shall be in accordance with ASTM C 1063.
g. Bonding Agents: ASTM C 932. Provide for exterior applications to masonry or concrete substrates.

B201001 1.4 EXTERIOR INSULATION AND FINISH SYSTEM (EIFS)

EIMA TM 101 and 01 EIMA TM 101.86. Designate in the project program that EIFS shall be used as the non-primary or the primary exterior finish material for the project. The exterior insulation and finish system (EIFS) shall be a job-fabricated exterior wall covering consisting of sheathing, moisture drainable insulation board system, reinforcing fabric, base coat, finish coat, adhesive, primer, accessories, flashing, sealant, and mechanical fasteners. The system components shall be compatible with each other and with the substrate as recommended or approved by, and the products of, a single manufacturer regularly engaged in furnishing Exterior Insulation and Finish Systems. All materials shall be installed by an applicator trained and approved by the system manufacturer in accordance with DOR-approved shop drawings and manufacturer’s recommendations. EIFS shall be Class PB or Class PM. Class PB EIFS shall not be used in first floor, high traffic areas, or in areas where pedestrians congregate without at least one layer of 20 ounce (567 grams) reinforcing fabric mesh. Use 1/8 inch (4 mm) minimum thickness for PB finish system. Color of the EIFS finish shall be consistent, with no variation noticeable to the DOR. Seal all joints in EIFS in accordance with ASTM C 1481 and as recommended by the manufacturer. Furnish manufacturer's standard warranty for the EIFS. Warranty shall run directly to Government and cover a period of not less than 5 years from date Government accepted the work.

B201001 1.4.1 EIFS System Components

a. Glass Mat Gypsum Sheathing Board - Conform to ASTM C 1177/C

1177M. Nail Pull Resistance: No less than 120 lb (54.4 Kg) when tested in accordance with ASTM C 473.

b. Mechanical Fasteners - Corrosion resistant and as approved by EIFS manufacturer. Select fastener type and pattern based on applicable wind loads and substrate into which fastener will be attached, to provide the necessary pull-out, tensile, and shear strengths.

c. Thermal Insulation - Drainable type. No portion of any layer of insulation shall be less than 3/4 in (19 mm) thick. The maximum thickness of all layers shall not exceed 4 in (101 mm). Insulation Board shall be certified as aged, in block form, prior to cutting and shipping, a minimum of 6 weeks by air-drying, or equivalent. Insulating material shall conform to ASTM C 578, Type I or IV, as recommended by the EIFS manufacturer and treated to be compatible with other EIFS components.

d. Reinforcing Fabric - Reinforcing fabric mesh shall be alkali-resistant, balanced, open weave, glass fiber fabric made from twisted multi-end strands specifically treated for compatibility with the other system materials, and comply with EIMA TM 105.01 and as recommended by EIFS manufacturer.

B201001 1.5 CONCRETE EXTERIOR WALL CLOSURE

B201001 1.5.1 Precast Concrete Wall Panels:

ACI 211.1 and ACI 301. PCI MNL-116 or PCI MNL-117. Concrete shall have a minimum 28-day compressive strength of 4000 psi (281 Kg/cm2). Air content of plastic concrete shall be between 4 and 6 percent air by volume. Provide a dosage of air entraining agent, which will produce 19 plus or minus 3 percent air in a 1 to 4 by weight standard sand mortar in accordance ASTM C 185. Provide aggregate in accordance with ASTM C 33. Design for watertight joints, or weeping joints having back-up water penetration protection in precast elements. Cracking potential of precast concrete elements shall be minimized by implementing expansion and control joints in the precast assembly.

Joints shall include properly sized and placed backing material and fully loaded and tooled sealant joint of no less than 1/4 inch sealant material thickness.

a. Exposed Aggregates - In addition to the above aggregate, facing mixture aggregate, and aggregate for homogeneous panels with exposed aggregate finish, shall be crushed stone.

b. Cement - ASTM C 150.

c. Admixtures - ASTM C 260 for air-entraining admixtures. Other admixtures: ASTM C 494. Certify that admixtures are free of chlorides.

d. Reinforcement - ACI 301.

e. Inserts - ASTM A 47, Grade 32510 or 35018, or may be medium strength cast steel conforming to ASTM A 27/A 27M, Grade U-60-30. Where exposed to moisture, provide inserts hot-dip galvanized after fabrication in accordance with ASTM A 153/A 153M.

f. Embedded Plates - ASTM A 36/A 36.

g. Flashing Reglets - Fabricate of sheet metal, open-type with

continuous groove 1 1/8 inches (28 mm) deep minimum by 3/16 inch (5 mm) wide at opening and sloped upward at 45 degrees. Top surface shall have toothed lip section to anchor upturned edge of metal snap-lock counter flashing when inserted. Sheet metal shall be stainless steel, 0.011 inch (0.28 mm) minimum thickness, ASTM A 167, Type 302 or Type 304, Number 2D finish, soft temper.

h. Clip Angles - ASTM A 36/A 36M steel, galvanized after fabrication in accordance with ASTM A 153/A 153M.

i. Ferrous Casting Clamps - ASTM A 47, Grade 32510 or Grade 35018 malleable iron or cast steel, or ASTM A 27/A 27M, Grade U-60-30, cast steel casting, hot-dip galvanized in accordance with ASTM A 153/A 153M.

j. Threaded Fasteners – Provide galvanized machine bolts, washers and, when required, nuts.

1) Bolts: ASTM A 449, 3/4 inch (19 mm) diameter machine bolts with hexagon head.

2) Washers: ANSI B18.21.1, medium or heavy lock-spring washers.

3) Nuts: ASTM A 563, Grade C, heavy, hexagon-type nuts.

4) Square Nuts: ASTM A 563, Grade A, plain.

B201001 1.6 CONCRETE WALL PANEL RESTORATION

Materials, physical and chemical properties, and composition of new concrete shall match that of existing concrete to be repaired, unless samples and testing determine that existing mixtures and materials are faulty or non-performing.

B201001 1.6.1 Existing Concrete Testing

Representative samples of existing concrete shall be taken from areas of the structure to be repaired at indicated locations. The samples shall be taken in accordance with ASTM C 42 and ASTM C 823 and tested in accordance with ASTM C 39, ASTM C 42, ASTM C 295, ASTM C 457, ASTM C 856, ASTM C 1218/C 1218M, and ASTM C 642, ASTM C 114, and ASTM C 1084. Aggregates in the existing concrete shall be evaluated in accordance with ASTM C 136 and ASTM C 295. The air content of the existing concrete shall be determined in accordance with ASTM C 457 and ASTM C 642.

B201001 1.6.2 Admixtures

Air entraining admixtures shall conform to ASTM C 260, water-reducing or -retarding admixtures shall conform to ASTM C 494, and pigments for integrally colored concrete shall conform to ASTM C 979 and ASTM C 1017. Admixtures shall not contain added chlorides.

B201001 1.6.3 Aggregates

Aggregates shall conform to ASTM C 33.

B201001 1.6.4 Cement

Cement composition shall match that of cement used in existing concrete to be repaired as determined by samples and testing and shall conform to the basic requirements of ASTM C 150, Type I or II. Cement shall have non-shrink (shrinkage compensating) properties and shall conform to ASTM C 1107, Class B or C, expansive cement type.

B201001 1.6.5 Pozzolan

Pozzolan shall conform to ASTM C 618, Class F, including limit on available alkalis, "Table 2 - Supplementary Optional Chemical Requirements," and uniformity requirements, "Table 4 - Supplementary Optional Physical Requirements."

B201001 1.6.6 Epoxy Anchor Adhesives

An epoxy-resin grout shall be used to bond steel anchors to concrete, and shall be a 100 percent solids, moisture insensitive, low creep, structural adhesive. The epoxy shall conform to ASTM C 881, type IV; grade and class selected to conform to the manufacturer's recommendations for the application. The epoxy adhesive shall be conditioned, proportioned, mixed, and applied in accordance with the manufacturer's recommendations, except as otherwise specified herein.

a. Epoxy-resin grout - Shall be a two-component material, 100 percent solids by weight, formulated to meet the requirements of ASTM C 881, Type I or II. Type I material shall be used when materials or atmospheric temperatures are 70 degrees F (21 degrees C) or above. Type II material shall be used when materials or atmospheric temperatures are below 70 degrees F (21 degrees C). Epoxy-resin grout shall have the ability to structurally rebond cracks, delaminations, and hollow plane conditions in concrete; shall be insensitive to the presence of water; and shall have the capability to penetrate cracks down to 5 mils in width. Materials shall have been used in similar conditions for a period of at least five years.
b. Epoxy Injection Ports - Injection ports for epoxy-resin grout shall be designed for the intended use as detailed in this section and shall be made according to the recommendation of the epoxy manufacturer.

B201001 1.7 WOOD SIDING SYSTEM

B201001 1.7.1 Horizontal Wood Siding

Horizontal Wood Siding: DOC PS 20, exterior, lap type, 6 inches wide, maximum practicable lengths, 7/16 inch (11 mm) thick, smooth face. All surfaces of wood siding and trim shall be shop coated with an alkyd primer.

a. Species and Grades

Utilize species and grades listed:

1) Grade 1 Common spruce-pine-fir; NELMA, NLGA, WCLIB, or WWPA.

2) Grade Prime or D finish, pressure-preservative-treated hem-fir; NLGA, WCLIB, or WWPA.

3) Grade D Select (Quality) eastern white pine, eastern hemlock-balsam fir-tamarack, eastern spruce, or white woods; NELMA, NLGA, WCLIB, or WWPA.

4) Grade D Select northern white cedar; NELMA or NLGA.

5) Grade B & B, pressure-preservative-treated southern pine; SPIB.

B201001 1.8 VINYL SIDING SYSTEM

Integrally colored, vinyl siding complying with ASTM D 3679. Horizontal or vertical pattern with exposure and shape to be compatible with overall design concept. Install in accordance with manufacturer’s recommendations.

B201001 1.8.1 Texture, Thickness, Finish and Color

Wood grain texture. Minimum Nominal Thickness: 0.044 inch (1.1 mm). Minimum Profile Depth (Butt Thickness): 5/8 inch (16 mm) or 3/4 inch (19 mm). Nailing Hem: Double thickness. Nailing process and fasteners shall be approved by the manufacturer.

B201001 1.8.2 Accessories

Provide integrally colored, premanufactured accessories to match siding. Use accessories at terminations with other materials.

B201001 1.9 MANUFACTURED FACED PANELS SYSTEMS EXTERIOR WALL SIDING

B201001 1.9.1 Glass Fiber Reinforced Cementitious Panels System

Siding made from fiber-cement board that does not contain asbestos fibers; complies with ASTM C 1186, Type A, Grade II; is classified as noncombustible when tested according to ASTM E 136; and has a flame-spread index of 25 or less when tested according to ASTM E 84. Install in accordance with manufacturers recommendations. Panel system shall be a horizontal siding pattern in plain or beaded-edge style, unless vertical sheet panels are allowed by the RFP Part 3. Texture: Rough sawn or smooth, factory primed.

B201001 1.10 OTHER EXTERIOR WALL CLOSURE

B201001 1.10.1 Glass Block

a. Glass block units shall be made of clear colorless glass. Units to have polyvinyl butyral edge coating. Units to have 75 percent light transmission allowance. System shall utilize ventilators and accessories recommended by glass block manufacturer. Glass block specified is manufactured by

Pittsburgh Corning Corporation. The manufacturer's name and catalog identification are provided to describe physical characteristics and functional requirements of the product desired. Other manufacturers' products that are considered to be the functional equivalent will be acceptable.

b. Exterior Glass Block Units shall be DECORA, VUE, or ARGUS pattern. Units designated as "reflective glass block" shall have a highly reflective oxide surface coating of a gray color.

B201001 1.10.2 Concrete Unit Masonry

Masonry walls shall comply with ACI 530.1. Load-bearing units: ASTM C90, Non-load bearing- units: ASTM C129, Type I or II. Provide ground face units, split-faced units, ground-faced units, or split-ribbed units for exposed exterior walls. Provide water repellent admixture to masonry units where the exterior face of the units will not receive a waterproof coating such as paint. Mortar shall conform to ASTM C 270, Type S. Test mortar in accordance with ASTM C 780. Provide water repellent admixture and color additive in mortar for masonry walls that will not receive a waterproof coating such as paint. Do not use admixtures containing chlorides. Provide air entrainment, not to exceed 12 percent, in mortar.

a. Adjustable Anchors for Structural Members - Use adjustable anchors to anchor masonry structural steel columns or beams. Weld the fixed portion of the anchors (steel anchor rods) to the structural steel member. Provide adjustable anchors 3/16 inch (5 mm) diameter steel wire, triangular-shaped. Anchors attached to steel shall be 5/16 inch (8 mm) diameter steel bars placed to provide 1/16 inch (1.6 mm) play between flexible anchors and structural steel members.

b. Deformed Bars - ASTM A 615/A 615M, ASTM A 616/A 616M, ASTM A 617/A 617M, or ASTM A 706/A 706M.

B201002 EXTERIOR WALL BACKUP CONSTRUCTION

B201002 1.1 CONCRETE UNIT MASONRY

Provide concrete unit masonry as described in B201001 1.10.2

Dampproofing – Dampproof the cavity-facing wythe of the backup masonry using asphaltic primer according to ASTM D 41, if dampproofing is not provided by a sprayed on foam or other DOR-approved membrane insulation system. Coordinate dampproofing materials and methods to provide vapor transmission control for the lifetime of the structure. Repair any dampproofing damaged by other construction operations.

B201002 1.2 LOAD-BEARING METAL FRAMING SYSTEM

Exterior Studs:

Max. Deflection Criteria	Exterior Finish
L/360	Cement Plaster, Wood Veneer, Synthetic Plaster, Metal Panels

Wall deflections shall be computed on the basis that studs withstand all lateral forces independent of any composite action from sheathing materials. Studs abutting windows or louvers shall also be designed not to exceed 1/4-inch maximum deflection and as required in UFC 4-010-01.

a. Studs - ASTM A 1003/ASTM A 1003M, Structural Grade 50, Type H minimum; provide Z180 (G60) galvanized coating in accordance with ASTM A 653/ASTM A 653M. Do not expose studs to direct moisture contact. Studs shall be stamped with manufacturer's name, initials, or logo, an ICBO number, material thickness and yield strength. Size and gage shall be as required to meet the loading requirements specified.

b. Bracing - Provide horizontal bracing in accordance with design calculations and AISI SG-673, consisting of, as a minimum, runner channel cut to fit between and welded to the studs or hot- or cold-rolled steel channels inserted through cutouts in the web of each stud and secured to studs with welded clip angles. Provide bracing, as a minimum, at 5 feet (1.52 meters) o.c. for wind load only, and 3"-4"(1.0 meters) o.c. for axial loads.

c. Sheathing - Provide sheathing to withstand structural loads imposed on the wall structure. Cover sheathing with either a 15 pound asphalt-impregnated building paper, or air barrier as required by the wall moisture analysis. Sheathing shall be one of the following:

1) Plywood: C-D Grade, Exposure 1, with an Identification Index of not less than 24/0.

2) Structural-Use and OSB Panels: Sheathing grade with durability equivalent to Exposure 1, Span Rating of 24/0 or greater.

3) Gypsum: ASTM C 79/C 79M and ASTM C 1177/C 1177M, 1/2 inch (13 mm) thick fire retardant (Type X) 5/8 inch (15 mm) thick; 4 feet (1.2 meters) wide with square edge for supports 16 inches (400 mm) o.c. with or without corner bracing of framing. Gypsum sheathing shall be faced with materials capable of resisting six months of weathering exposure without degradation of the covering or the gypsum. Seal all joints as recommended by the manufacturer.

B201002 1.3 WOOD FRAMING SYSTEM

All materials shall be kiln-dried lumber complying with DOC PS 20. Installation shall be in accordance with AF&PA T11. System shall use preservative pressure treated lumber at sill plates and other members in contact with concrete and masonry surfaces.

a. Species and Grades - Provide species and grades listed:

1) Grade 2 Common spruce-pine-fir; NELMA, NLGA, WCLIB, or WWPA.

2) Grade 2 Common, hem-fir; Douglas-fir; NLGA, WCLIB, or WWPA.

3) Grade 2 Common, southern pine; SPIB.

b. Sheathing - Sheathing shall withstand structural loads imposed on the wall structure. Cover sheathing with either a 15 pound

asphalt-impregnated building paper, or air barrier as required by the wall moisture analysis. Sheathing shall be one of the following:

1) Plywood: C-D Grade, Exposure 1, with an Identification Index of not less than 24/0.

2) Structural-Use and OSB Panels: Sheathing grade with durability equivalent to Exposure 1, Span Rating of 24/0 or greater.

3) Gypsum: ASTM D 3273 for mold resistance, ASTM C 1177/C1177M, fire retardant (Type X) 5/8 inch (15 mm) thick; 4 feet (1.2 meters) wide with square edge for supports 16 inches (400 mm) o.c. with or without corner bracing of framing. Gypsum sheathing shall be faced with material capable of resisting six months of weathering exposure without degradation or the covering or the gypsum. Seal all joints as recommended by the manufacturer.

B201002 1.4 CAST-IN-PLACE CONCRETE SYSTEM

a. Unless otherwise noted herein, all concrete design and construction must be in accordance with UFC 1-200-01.
b. Concrete construction must be in accordance with ACI 301.
c. Refer to Performance Verification Testing for Cast-in-place field quality control.
d. Concrete construction tolerances must be in accordance with ACI 117.
e. Design for watertight joints, or weeping joints having back-up water penetration protection in precast elements. Cracking potential of precast concrete elements shall be minimized by implementing expansion and control joints in the precast assembly.
f. Joints shall include properly sized and placed backing material and fully loaded and tooled sealant joint of no less than 1/4 inch sealant material thickness.

B201003 INSULATION & VAPOR RETARDER

Insulation, Vapor Retarders, and Air Barrier Systems in or on Exterior Enclosure shall include: insulation, liquid, sheet or continuous film materials installed separately in or on wall assemblies to provide resistance to heat loss/gain, and vapor penetration.

B201003 1.1 VAPOR RETARDER

Comply with ASTM C755. Incorporate in the exterior wall system where required by vapor transmission calculations or dew point analysis indicates the need or in conditions of high moisture exposure.

B201003 1.1.1 Bituminous Dampproofing

Bituminous Dampproofing shall be ASTM D449, Type I or Type II bituminous dampproofing on the exterior surface of the interior wythe of masonry in a cavity wall (back-up wall for masonry veneer).

B201003 1.1.2 Building Paper

FS UU-B-790, Type I, Grade D, Style 1. Where required, provide over

sheathing on wood or metal framed wall construction to eliminate water penetration.

B201003 1.1.3 Polyethylene sheeting

ASTM 4397, minimum 6 mil thickness. Provide typically on the interior face of insulated, wood or metal stud wall construction, unless a moisture vapor analysis indicates otherwise. (Poly sheeting on the interior surface of the studs is not recommended for cold, mixed-humid, mixed-dry, hot-humid or hot-dry climates.)

B201003 1.2 AIR BARRIER

Provide continuous air barrier that is durable to last the life of the facility. Seal all holes and seams in the air barrier. Support air barrier to withstand maximum positive and negative air pressure to be placed on the building without displacement, or damage, and transfer the load to the structure. Do not install electrical boxes or fixtures with holes through the air barrier.

Air barrier materials shall have an air permeance not to exceed 0.004 cfm/sf at 0.3"wg (0.02L/s. m2 at 75 Pa) when tested in accordance with ASTM E 2178. Provide installation, seal edges, seal transitions, and seal penetrations as recommended by the air barrier manufacturer. Seal the air barrier in a flexible manner to allow for relative movement of adjacent building envelope components. Air barrier installation at windows shall be in accordance with ASTM E 2112.

Provide building envelope drawings indicating and locating each material that makes up the continuous air barrier. Details of the air barrier shall clarify edges, transitions, and penetrations sealing methods. In addition, identify the boundary limits of the air barrier and of the zone or zones to be tested for building air tightness.

Provide minimum 40 mil DFT elastomeric spray or 36 mil elastomeric sheet barrier when air barriers are used as water barriers.

B201003 1.3 INSULATION SYSTEMS

Vertical and horizontal polystyrene insulation conforming to ASTM C578 or rigid polyisocyanurate board wall insulating products conforming to ASTM C591 or mineral-fiber blanket insulation conforming to ASTM C 665 shall be provided. Wall insulating product shall have a minimum R-value to meet the code and the energy design of the facility. Seal the joints in rigid insulation within cavity/veneer walls for additional moisture and air infiltration protection.

B201004 PARAPETS

Avoid parapets when possible, but when necessary, provide parapets with the same materials as the exterior wall construction, including framing members, anchors, flashings, cants, and accessories. Parapets shall be designed to withstand the lateral loads prevailing at the project site and be provided with thruwall flashing below the parapet cap, at structural members, at penetrations, and at the roof level. Provide flashing and scuppers in accordance with SMACNA.

B201005 EXTERIOR LOUVERS & SCREENS

If required, provide louvers, which are not an integral part of the mechanical equipment, exterior closures, grilles and screens, storm shutters, and other materials used for a variety of purposes including screening of equipment or as louvers for exterior doors.

Louvers, screens, grilles in shall be selected in a color and design that is compatible with the fabric of the exterior architectural character as described below. For frame construction, install in accordance with ASTM E 2112.

B201005 1.1 WALL LOUVERS

Wall louvers shall be drainable blade type louver with blade slopes of 45 degrees minimum, but provide wind driven rain rated louvers for wall louvered rooms without a floor drain within the room. Louvers shall be made to withstand a wind load of not less than 30 psf (146 Kg/m2), .08 inch (2 mm) thick 6063-T5 or T52 extruded aluminum in a factory-finished color in accordance with AAMA 2605 with a minimum coating thickness of 1.2 mil to match the building facade. Wall louvers shall bear the AMCA certified ratings program seal for air performance and water penetration in accordance with AMCA 500 , 500L (wind driven rain), and AMCA 511. Provide sill flashing with sloped drain pan at base of louver to collect moisture that migrates down the interior face of the louver. This sill flashing shall drain water to the outside of the building. Louvers shall have bird screens.

B201005 1.2 SCREENED EQUIPMENT ENCLOSURE

Design and fabricate support frames to withstand wind loads. Anchor frames securely in place. Provide secondary horizontal steel or aluminum framing for attachment of screen materials. Screen material shall be factory finished coating in accordance with AAMA 2605 with a minimum coating thickness of 1.2 mils. Formed metal panels from galvanized steel sheet per ASTM A 653 or aluminum sheet per ASTM B 209.

B201005 1.3 STORM SHUTTERS

B201005 1.3.1 Roll Shutters

Roll shutters shall have factory finished 0.050 inch (1.27 mm), 6063-T5/T6 aluminum slats with continuous over-head housing, frame and tracks. Roll shutter shall be capable of being locked in a closed position by a non-key device.

B201005 1.3.2 Accordion Shutters

Accordion shutters shall have factory-finished aluminum alloy 6063-T5/T6 slats and tracks. Accordion shutter shall have stainless steel wheel carriers, nylon wheels and guides with stainless steel fasteners and be capable of being locked in a closed position by a non-key device.

B201005 1.3.3 Hinged Louvered Shutters

Hinged louvered shutters shall have factory finished 0.50 inch (13 mm), 6063-T5/T6 aluminum louvered blades and frames with stainless

steel hinges, holders, and fasteners. Allow minimum space between horizontal louver blades. Provide storm bar where required due to the lateral loads imposed on the shutter.

B201005 1.3.4 Removable Shutters

Removable shutters shall have formed factory finished 0.050 inch (1.27 mm), 3003-H16 aluminum panels and continuous 6063-T5/T6 header and base frame with stainless steel fasteners or spring tempered stainless steel clips.

B201005 1.3.5 Exterior Door Louvers

If allowed by UFC 4-010-01, louvers for exterior doors shall be inverted "Y" type with minimum of 30 percent net-free opening. Weld or tenon louver blades to continuous channel frame and weld assembly to door to form watertight assembly. Form louvers of hot-dip galvanized steel of same gage as door facings. Louvers shall have steel-framed insect screens secured to room side and readily removable. Louvers shall have aluminum wire cloth, 18 by 18 or 18 by 16 inch mesh, for insect screens. Net-free louver area to be before screening.

B201006 BALCONY WALLS & HANDRAILS

B201006 1.1 PRECAST CONCRETE BALCONY WALLS

Precast concrete balcony walls shall be in accordance with section B201001 EXTERIOR CLOSURE paragraph titled, "Precast Concrete Wall Panels."

B201006 1.2 UNIT MASONRY BALCONY WALLS

B201006 1.2.1 Clay Masonry Units

Clay masonry balcony walls shall be in accordance with section B201001 EXTERIOR CLOSURE, paragraph titled, "Face Brick."

B201006 1.2.2 Concrete Masonry Units

Concrete masonry balcony walls shall be in accordance with section B201001 EXTERIOR CLOSURE, paragraph titled, "Unit Masonry."

B201006 1.3 METAL FRAMED ASSEMBLY BALCONY WALLS

Metal framed assembly balcony walls shall be in accordance with section B201001 EXTERIOR CLOSURE, paragraph titled, "Load Bearing Metal Framing System."

B201006 1.4 WOOD FRAMED ASSEMBLY BALCONY

Wood framed assembly balcony walls shall be in accordance with section B201001 EXTERIOR CLOSURE, paragraph titled, "Wood Framing System."

B201006 1.5 HANDRAILS

Design handrails and anchorage connections to resist loads in accordance

with IBC. Provide materials in accordance with NAAMM PR, with the same size handrail and vertical post. Provide series 300 stainless steel pipe collars. Factory coat all metal railings, except ornamental metals such as brass, bronze, and nickel-silver, with a high performance coating in accordance with AAMA 2605 with a minimum coating thickness of 1.2 mils unless otherwise noted.

B201006 1.5.1 Steel Handrails

Steel handrails, including inserts in concrete, steel pipe conforming to ASTM A 53 or structural tubing conforming to ASTM A 500, Grade A or B of equivalent strength shall be provided. Steel railings shall be of 1 1/2 inches (38 mm) nominal size. Railings shall be hot-dip galvanized, shop primed shop painted for exterior applications.

B201006 1.5.2 Aluminum Handrails

Aluminum railing shall be of 1-1/2 inch (38 mm) nominal schedule 40 pipe conforming to ASTM B 429 or 1-3/4 inch (44 mm) square aluminum semi-hollow tube with rounded corners conforming to ASTM B 221. Railings shall be coated with a high performance coating or anodized in accordance with AAMA 611, Class I. All fasteners shall be Series 300 stainless steel.

B201006 1.5.3 Wood Handrails

Wood handrails shall be of pre-finished natural hardwood in oak, walnut, or ash. Wood shall be coated with hard acrylic finish to withstand indentations.

B201007 EXTERIOR SOFFITS

Exterior soffit system assemblies shall include trim and necessary accessories including high performance coatings, if required. Installation shall be crisp, fit and trim with tight joinery to back-up framing. Soffits shall be designed to be field assembled by lapping side edges of adjacent panels and mechanically attaching through panels to galvanized, non-load bearing framing conforming to ASTM A 653 (G60) and ASTM C 645, using concealed fasteners. Provide trim accessories of the same material and finish as the soffit material where soffit abuts other materials.

Use adequate backing material to assure snug joints and even face planes. Where soffits ventilate an attic space, or an otherwise unventilated space, provide a soffit/ridge/louver/ventilator ventilation system with air quantities complying to the IBC. For spaces intentionally not vented, provide sealed soffits to maintain the integrity of the air barrier and insulating envelope.

B201007 1.1 METAL SOFFIT PANELS

Metal soffit panels shall be factory-formed and factory-finished. Use factory-applied sealant in side laps

B201007 1.2 VINYL SOFFIT SYSTEM

If required, provide integrally colored vinyl soffit complying with ASTM D 4477.

B201007 1.3 EXTERIOR GYPSUM BOARD SYSTEM

Exterior gypsum wall board soffit system shall be tapered edge 5/8 inch (16 mm) thick, 48 inch (1.2 meter) wide exterior gypsum board panels conforming to ASTM C 931 and ASTM C 840, mechanically attached to galvanized non-load bearing framing conforming to ASTM A 653, G60 and ASTM C 754. Tape and finish gypsum board joints in accordance with ASTM C840. Soffit design shall assure that the gypsum soffit material does not have direct water contact.

B201008 WALL FLASHING

Flashing shall be aluminum or stainless steel or copper. Aluminum shall conform to ASTM B 209/B 209M, 0.040 inches (1.27 mm) thick and shall be coated to match the item flashed. Stainless steel shall conform to ASTM A 167, type 302 or 304, 2D finish, fully annealed, dead soft temper. Thickness shall be a minimum of 0.018 inches (0.4572 mm). Copper shall conform to ASTM B 370, cold rolled temper. Thickness of copper shall be 20 ounces per square foot (6.125 Kg/m2).

B201009 EXTERIOR PAINTING AND SPECIAL COATINGS

B201009 1.1 GENERAL REQUIREMENTS

Painting practices shall comply with applicable federal, state and local laws enacted to insure compliance with Federal Clean Air Standards. Apply coating materials in accordance with SSPC PA 1. SSPC PA 1 methods are applicable to all substrates.

All paint shall be in accordance with the Master Painter Institute (MPI) standards for the exterior architectural surface being finished. The current MPI, "Approved Product List" which lists paint by brand, label, product name and product code as of the date of contract award, will be used to determine compliance with the submittal requirements of this specification. The Contractor may choose to use a more current MPI "Approved Product List"; however, only one list may be used for the entire contract. All coats on a particular substrate, or a paint system, must be from a single manufacturer. No variation from the MPI Approved Products List is acceptable.

MPI paint systems identified in the RFP take precedence over other avilable MPI systems. The RFP does not identify all paint system applicable to all painting of the facility, therefore utilize the *MPI Architectural Painting, Exterior Systems Manual*to identify other appropiate paint systems for the project. Utilize the "Premium Grade" systems and comply with all limitations stated in the MPI "Approved Product List" for each paint product. Products having an MPI EPR 3 rating shall be given preferential consideration over lower EPR ratings. Use higher performing paint systems unless the lower performing paint system can be justified based on a lifecycle cost to include surface preparation, application, disposal, environmental impact, and required recoating cycles. Only use paint products that have been tested for MPI'S "DETAILED PERFORMANCE". Do not use products that have been tested for "INTENDED USE".

Paints and coatings shall comply with Master Painters Institute Green Performance Standard GPS-1-08 which is available at the following website; http://www.specifygreen.com/EvrPerf/EnvironmentalPerformance.html . Choose paints that provide performance, are environmentally friendly, and

that conform to but do not exceed EPA or local environmental regulations, whichever requires the lowest VOC content.

Remove dirt, splinters, loose particles, grease, oil, and other foreign matter and substances deleterious to coating performance as specified for each substrate before application of paint or surface treatments. For existing buildings, use MPI *Maintenance Repainting Manual*to determine the coatings that need to be removed. Remove deteriorated or loose coatings before repainting begins. Oil and grease shall be removed prior to mechanical cleaning. Cleaning shall be programmed so that dust and other contaminants will not fall on wet, newly painted surfaces. Exposed ferrous metals such as nail heads on or in contact with surfaces to be painted with water-thinned paints, shall be spot-primed with a suitable corrosion-inhibitive primer capable of preventing flash rusting and compatible with the coating specified for the adjacent areas. Notwithstanding MPI requirements, clean exterior ferrous metal that is exposed to weather conditions (wind, precipitation, solar degradation, and humidity) to a SSPC SP 10 level (near white).

B201009 1.1.1 MPI Gloss Levels

Gloss levels shall comply with the MPI system of determining gloss as defined in the Evaluation sections of the MPI Manuals. Utilize the performance characteristics of the paint gloss and sheen to categorize paint rather than manufacturers’ description of the product.

The MPI gloss Levels are indicated by the notation G1, G2, G3, G4, G5, G6, or G7. Use G2 "Velvet-like” flat for vertical surfaces and undersides of balconies and soffits. Use G3 "Eggshell-like" in high "traffic areas for ceilings and walls, when a surface can be touched and a slightly more durable finish is desired, and for dark accent colors. Use G5 Semigloss for ceilings, walls, doors and trim for high durability and cleanability. Use G6 Gloss only in special situations such as for exterior wood and metal, piping identification, or special effects. The MPI gloss and sheen standard values are per ASTM D523, method D and are as follows:

Gloss Level Number	Gloss@60 Degrees	Sheen@85 Degrees
Gloss Level 1(G1)–Matte or Flat	Max.5 units	Max.10 units
Gloss Level 2(G2)–"Velvet-like" Flat	Max. 10 units	10-35 units
Gloss Level 3(G3)–"Eggshell-like"	Max. 10-25 units	10-35 units
Gloss Level 4(G4)-"Satin-like	Max. 20-35 units	Min. 35 units
Gloss Level 5(G5)-Semi-Gloss	35-70 units	
Gloss Level 6(G6)–Gloss	70-85 units	
Gloss Level 7(G7)–High Gloss	More than 85 units	

B201009 1.1.2 MPI System Designations and Table Abbreviations

The MPI coating system number description is found in either the *MPI Architectural Painting Specification Manual*or the *Maintenance Repainting Manual*and defined as an exterior system

a. EXT - MPI short-term designation for an exterior coating system on a new surface.
b. REX - the MPI short term designation for an exterior coating system used in repainting projects or over existing coating systems.
c. DSD - the MPI short-term designation for Degree of Surface Degradation as defined in the Assessment sections in the *MPI Maintenance Repainting Manual*. Degree of Surface Degradation designates the MPI Standard for description and appearance of existing condition of surfaces to be painted. This DSD classification is used to determine the proper surface preparation necessary for painting.
d. DFT – The short-term designation for dry film thickness. DFT is the minimum acceptable depth or thickness of a coating or system in the dry state. The maximum acceptable DFT is not more than 50% greater than the minimum acceptable DFT (example... DFT = 2 mils, maximum DFT = 3 mils). The DFT indicated in the paint systems below relate to new coatings - MPI INT. MPI RIN will be less than the indicated DFT.
e. Paint Systems Abbreviations: BF – block filler; C – clear coat; SP – spot primer ;P – primer coat; I – intermediate coat; T – topcoat; .

B201009 1.1.3 Surface Preparation

Comply with the "Exterior Surface Preparation" section of the *MPI Architectural Painting Specification Manual*or the Exterior Surface Preparation” section of the *MPI Maintenance Repainting Manual*. All suggestive language such as "may" or "should" are deleted from the standard and "must" or "shall" inserted in its place. Suggestive language such as "recommended" or "advisable" is deleted from the standard and "require" or "required" inserted in its place. The results of these wording substitutions change this document to required procedures. For surface preparation, determine a MPI DSD Assessment of each surface and comply with the MPI Surface Preparation Requirements relating to the assessments.

B201009 1.2 EXTERIOR CONCRETE FINISHES

New and Existing, previously painted concrete, vertical surfaces, undersides of balconies and soffits, but excluding tops of slabs:

a. Latex, System DFT: 3.5 mils

1) MPI EXT 3.1A/ REX 3.1L-G3/G4 (Low sheen); P: MPI 3, I: MPI 15, T: MPI 15

New and Existing, previously painted concrete floors, patios, and walkways with low contact and traffic. Not for high abuse, wheel traffic, or high humid area applications:

a. Latex, System DFT: 3.5 mils

1) MPI REX 3.2A-G2/G3 (Low gloss); P: MPI 60, I: MPI 60, T: MPI 60

B201009 1.3 EXTERIOR CONCRETE MASONRY FINISHES

New and Existing, previously painted concrete masonry:

a. Latex, System DFT: 11 mils

1) MPI EXT 4.2A-G3/G4 (Low sheen) / REX 4.2-G5; BF:MPI 4, P:MPI 15, I: MPI 15, T: MPI 15

New and Existing Profiled Block (Split Faced Block)

a. Latex System DFT: 11 mils

1) MPI EXT 4.2L-G3/4 (Satin-like) P: MPI 3 I: MPI 15 T: MPI 15

B201009 1.4 EXTERIOR METAL FINISHES

B201009 1.4.1 New and existing steel that has been blast cleaned to SSPC SP 6 & 10:

a. Alkyd, System (in SSPC Zones 1B and 2A) DFT: 5.25 mils

1) MPI EXT/ REX 5.1D-G5 (Semigloss); P:MPI 79, I:MPI 94, T:MPI 9

b. Waterborne Light Industrial (in SSPC Zones 1B, 3A, 3B, and 3C), System DFT: 8.5 mils

1) MPI EXT 5.1R-G5 (Semigloss); P:MPI 101, I:MPI 108, T:MPI 163

B201009 1.4.2 New Galvanized surfaces:

a. Epoxy P/Waterborne Light Industrial (Use MPI 25 cleaner), System DFT: 4.5 mils

1) MPI EXT 5.3K-G5 (Semigloss); P:MPI 101, I:MPI 161, T:MPI 161

B201009 1.4.3 Galvanized surfaces with slight coating deterioration, with little or no rusting:

a. Epoxy P/Waterborne Light Industrial Coating (Use MPI 25 cleaner), System DFT: 4.5 mils

1) MPI EXT 5.3K-G5 (Semigloss); P:MPI 101, I:N/A, T:MPI 163

B201009 1.4.4 Galvanized surfaces with severely deteriorated coating or rusting:

a. Epoxy P/Waterborne Light Industrial Coating (Use MPI 25 cleaner), System DFT: 8.5 mils

1) MPI EXT 5.3K-G5 (Semigloss); P:MPI 101, I:MPI 163, T:MPI 163

B201009 1.5 EXTERIOR WOOD FINISHES

B201009 1.5.1 New and existing uncoated doors including backprime, top, bottom, edges of doors, and dressed lumber and plywood not specified otherwise:

a. Alkyd, System DFT: 5 mils

1) MPI EXT 6.3B-G5 (Semigloss); P:MPI 7, I:MPI 94, T:MPI 94

b. Latex, System DFT: 5 mils (Not for human or abrasive contact areas)

1) MPI EXT 6.3A-G5 (Semigloss); P:MPI 7, I:MPI 11, T:MPI 11

B201009 1.5.2 Existing dressed lumber or plywood, including top, bottom, and edges of doors previously coated with an alkyd / oil based finish:

a. Alkyd, System DFT: 5 mils

1) MPI REX 6.3B-G5 (Semigloss); P:MPI 5, I:MPI 94, T:MPI 94

b. Latex, System DFT: 5 mils (Not for human or abrasive contact areas)

1) MPI REX 6.3A-G5 (Semigloss); P:MPI 5, I:MPI 11, T:MPI 11

B201009 1.5.3 Existing dressed lumber or plywood, including top, bottom, and edges of doors previously coated with an latex / waterborne finish:

a. Latex, System DFT: 4.5 mils

1) MPI REX 6.3L-G5 (Semigloss); P:MPI 6, I:MPI 11, T:MPI 11

B201009 1.5.4 New and existing dressed lumber or plywood, including stairs and decks:

a. Latex, System DFT: 4.5 mils(not for use in high traffic areas)

1) MPI REX 6.5A-G5/G6 (Low gloss); P:MPI 5, I:MPI 60, T:MPI 60

B201009 1.6 EXTERIOR STUCCO FINISHES

B201009 1.6.1 New and existing stucco or plaster:

a. Latex, System DFT: 4.5 mils

1) MPI EXT/REX 9.1J-G3/G4 (Low sheen); P:MPI 3, I:MPI 15, T:MPI 15

2) MPI EXT/REX 9.1J-G5 (Semigloss); P:MPI 3, I:MPI 11, T:MPI 11

B201010 EXTERIOR JOINT SEALANT

Sealant joint design, priming, tooling, masking, cleaning and application shall be in accordance with the general requirements of *Sealants: A Professionals' Guide*from the Sealant, Waterproofing & Restoration Institute (SWRI). All sealant

shall conform to ASTM C 920.

Joints shall include proper backing material for sealant support during application, control of sealant depth, and to act as a bond breaker. Use filler boards, backer rods and bond breaker tapes. Provide priming unless specifically not recommended by the sealant manufacturer. Applied sealant shall be tooled. Tooling shall not compact sealant too less than the minimum sealant thickness required. Mask adjacent surfaces to control sealant boundaries during sealant application.

B201011 SUN CONTROL DEVICES (EXTERIOR)

Sun control devices shall be manufactured devices to provide sun control on exterior windows and storefronts. Sun control devices shall be designed and installed to withstand the wind loads prevailing at the project site.

B201011 1.1 EXTERIOR SUN SCREENS

Exterior sun screens shall be of aluminum with 6063-T5/T6 aluminum demountable frame attachment. Screen material shall be formed factory finished metal from aluminum sheet per ASTM B 209. Screen material shall be factory finished coating in accordance with AAMA 2605 with a minimum coating thickness of 1.2 mils. Sunscreen shall be awning, fin or other type appropriate to the installation.

B201012 SCREEN WALL

Screen walls include attached or unattached walls adjacent to the main building. Screen walls shall conform to the applicable portions of Section B201001 EXTERIOR CLOSURE.

B201090 OTHER EXTERIOR WALLS

B2020 EXTERIOR WINDOWS

Standard windows shall be in compliance with ANSI/AAMA/WDMA 101, SWI SWS, UFC 4-010-01, and the design criteria of ASCE 7 for glazed windows to meet the Building Code.

If required, provide windows that meet the requirements of AAMA/WDMA 101/I.S.2. Residential construction shall utilize windows that comply with AAMA LC-25 designation unless the wind pressure on the building exceeds 38 psf (185 Kg/m2). Commercial (non-residential) construction shall utilize windows that comply with AAMA designation HC-40 (60 psf - 293 Kg/m2) for windows that do not have to meet anti-terrorism requirements, and HC-60 (90 psf - 439 Kg/m2) for commercial windows that are required to meet anti-terrorism requirements, unless the wind pressure or blast pressure on the building exceeds the design pressure for these minimum windows. Determine the wind pressure on the building by converting the ASCE-7 basic wind speed to wind pressure and find the corresponding structural test pressure in the AAMA specific requirements or optional performance tables. If the residential window wind pressure exceeds of 38 psf (185 Kg/m2) or the commercial (non-residential) window wind pressure exceeds 60 psf (293 Kg/m2) or exceeds 90 psf (439 Kg/m2), utilize a higher AAMA designated window complying with the calculated wind pressure. Anti- Terrorism window systems (including connections) shall meet the testing requirements of UFC 4-010-01 when tested in accordance with ASTM F1642.

Comply with ASTM E 2112 and with flashing and weather-resistive barrier manufacturers' recommendations to install windows in framed wall construction. Comply with window flashing details from BIA for masonry back-up and veneer walls. Engineer and install window cleaning access and anchorage to the exterior wall for facilities over three stories tall without interior window cleaning access from pivoting or tilting sash. Provide anchors in accordance with OSHA standard 29 CFR Section 1910.66.

Windows shall be provided with sills on the exterior and stools on the interior of the opening. Sills shall be special shape or cut unit masonry or precast concrete in masonry exterior construction and extruded aluminum or aluminum-wrapped wood framing or formed metal in other construction. Positively slope sills away from windows. Window stools shall be slate or solid polymer for commercial construction and painted wood for residential construction.

B202001 WINDOWS

Exterior windows shall consist of fixed and operable sash used singly and in multiples. Provide operable sash in spaces occupied by people as a minimum. Include operating hardware, non-corroding framed metal screens for operable sash, integrated blinds set between glass panels and security grilles. Provide jamb support for larger windows where recommended by manufacturer. Metal windows with insulating glass shall have thermally broken frames and sash.

Provide glazing in exterior windows in accordance with section B202004 EXTERIOR GLAZING.

B202001 1.1 STANDARD WINDOW SYSTEMS

B202001 1.1.1 Steel Windows

Conform to SWI SWS. Solid hot-rolled steel shape welded frames and mullions. Provide chemically cleaned and primed galvanized frames with polysteel powder coat finish. Provide glazing beads, steel frame screens with aluminum mesh at operable sashes, hardware and locks, and tinted glazing. Aluminum screens shall comply with ANSI/SMA 1004.

B202001 1.1.2 Aluminum Windows

Conform to ANSI/AAMA/WDMA 101. Factory finish aluminum windows and provide with aluminum frame screens with aluminum mesh at operable sash, hardware and locks, and tinted glazing. Aluminum screens shall comply with ANSI/SMA 1004.

Exposed aluminum surfaces shall be factory finished with an AA 45 anodic coating or an AAMA organic coating. Provide a minimum of architectural Class II anodized coating or a baked enamel finish conforming to AAMA 2604 for residential construction. Provide a minimum of architectural Class I anodized coating or a high-performance organic coating conforming to AAMA 2605 for non-residential (commercial) construction. AAMA coatings shall have a total dry film thickness of 1.2 mils.

B202001 1.1.3 Security Windows

Security windows delay forced entry into the building through the

windows. In addition to meeting the requirements of AAMA 101, windows designated "resistance to forced entry" shall conform to the requirements of AAMA 1302.

B202001 1.1.4 Plastic Windows, Factory Finish

Provide integral colored or co-extruded color PVC, welded and reinforced corners, reinforcing members, fasteners, hardware, weatherstripping, welded sill, and anchors conforming to ANSI/AAMA/WDMA 101 or ASTM D 4099. The exterior grade polyvinyl chloride extrusion shall comply with AAMA 303 and ASTM 4726.

B202001 1.1.5 Wood Windows

Wood windows shall consist of complete units including sash, glass, frame, weatherstripping, insect screen, and hardware. Window units shall meet the requirements of AAMA 101, except maximum air infiltration shall not exceed 0.30 CFM per linear foot of sash crack when tested under uniform static air pressure difference of 1.57 psf (7.66 Kg/m2). Glass and glazing materials shall conform to section B202004, EXTERIOR GLAZING. Insect screen shall meet ASTM D 3656, Class 2, 18 by 14 mesh, color charcoal. Aluminum screen frames shall meet SMA 1004.

a. Finish

1) Vinyl (PVC) Cladding: Preservative treat all basic wood frame and sash members in accordance with WDMA I.S.4, except do not use pentachlorophenol. Clad all exterior surfaces with rigid polyvinyl sheathing, complying with ASTM D 1784, class 14344-C, not less than 35 mil average thickness.

2) Aluminum Cladding: Preservative treat all basic wood frame and sash members in accordance with WDMA I.S.4, except do not use pentachlorophenol. Clad all exterior surfaces with roll formed aluminum with joints sealed during assembly. Aluminum clad frames and sash shall meet performance requirements of AAMA 101. Aluminum finish shall be an organic coating of an AAMA 2604 coating for residential construction and AAMA 2605 for non-residential (commercial) construction with a minimum dry film thickness of 1.2 mils.

B202002 STOREFRONTS

Provide one-story storefront system fabricated from formed and extruded aluminum and glass components for exterior use.

B202002 1.1 ALUMINUM-FRAMED STOREFRONTS

B202002 1.1.1 Performance Requirements

a. Structural Requirements, as measured in accordance with ANSI/ASTM E330: Wind loads for exterior assemblies shall meet or exceed 25 psf (122 Kg/m2) acting inward and 25 psf (122 Kg/m2) acting outward. Design system to withstand this as a minimum and comply with design pressure established within the required ASCE 7-05 Wind Speed

Calculations determined by the overall average opening within the project.

b. Deflection: Maximum calculated deflection of any framing member in direction normal to plane of wall when subjected to specified design pressures for spans up to and including 13’-6" shall be limited to 1/175 of its clear span and for spans greater than 13’-6" deflection shall be limited to 1/240 + 1/4" of its clear span, except that maximum deflection of members supporting plaster surfaces shall not exceed 1/360 of its span.

c. Air Infiltration - Air leakage through fixed light areas of storefront shall not exceed 0.06 cfm per square foot of surface area when tested in accordance with ASTM E283 at differential static pressure of 6.24 psf (33.84 Kg/m2).

d. Water Penetration - When tested in accordance with ASTM E 331, there shall be no water penetration at a pressure of 15 psf (73 Kg/m2) of fixed area.

e. Water infiltration No uncontrolled leakage when tested in accordance with ASTM E331 at test pressure of 10 psf (48 Kg/m2) for system standard and capable of performing within the Design Pressure requirements derived from the ASCE 7-05 requirements.

B202002 1.1.2 Doors And Frames

Provide doors complete with frames, framing members, subframes, transoms, adjoining sidelights, adjoining window wall, trim, and accessories, as required for a complete installation. Anchors shall be stainless steel. Weatherstripping shall be Continuous wool pile, silicone treated, or type recommended by door manufacturer. See B203008, EXTERIOR DOOR HARDWARE for hardware requirements.

B202002 1.1.3 Aluminum Alloy for Doors and Frames

ASTM B 221, Alloy 6063-T6 for extrusions. ASTM B 209, alloy and temper best suited for aluminum sheets and strips.

B202002 1.1.4 Fabrication

a. Aluminum Frames: Provide removable glass stops and glazing beads for frames accommodating fixed glass. Use countersunk stainless steel Phillips screws for exposed fastenings, and space not more than 12 inches (300 mm) o.c.. Mill joints in frame members to a hairline fit, reinforce, and secure mechanically.
b. Aluminum Doors: Doors shall be medium or wide stile. Doors shall be not less than 1-3/4 inches (44 mm) thick. Minimum wall thickness, 0.125 inch (3.175 mm), except beads and trim, 0.050 inch (1.27 mm). Bevel single-acting doors at lock, hinge, and meeting stile edges. Double-acting doors shall have rounded edges at hinge stile, lock stile, and meeting stile edges.
c. Finishes: Provide exposed aluminum surfaces with factory finish of anodic coating conforming to AA45, Architectural Class I or an organic coating conforming to AAMA 2605 with a total dry film

thickness of not less than 1.2 mils.

B202003 CURTAIN WALLS

B202003 1.1 GLAZED CURTAIN WALL SYSTEM REQUIREMENTS

Provide system complete with framing, mullions, trim, panels, windows, glass, glazing, sealants, insulation, fasteners, anchors, accessories, concealed auxiliary members, and attachment devices for securing the wall to the structure as specified.

Fully coordinate system accessories directly incorporated and adjacent to related work and insure materials compatibility, deflection limitations, thermal movements, and clearances and tolerances as specified. Design and test in accordance with *AAMA Curtain Wall Manual*.

B202003 1.1.1 Source

Curtain wall system components shall be furnished by one manufacturer or fabricator; however, all components need not be products of the same manufacturer.

B202003 1.1.2 Cleaning Provisions

For curtain wall systems over two stories in height reinforce curtain wall members and provide support for cleaning rigs. The support for cleaning rigs may be provided by other elements of the facility.

B202003 1.1.3 Warranty

a. System Warranty – Manufacturer of the curtain wall system shall be warrant that the design, construction, and materials installed in the system shall be free of manufacturer's defects for the life of the installation. The manufacturer shall provide a similar warranty for the individual components of the system that are provided by other, outside manufacturers. Execute the warranty for the system directly to the Government.
b. Additional Glass Warranty – Insulating glass units shall be guaranteed not to develop material obstruction of vision as a result of dust or film formation on the inner glass surface caused by failure of the seal, other than through glass breakage, within a period of 5 years from date of acceptance of work by the Government. Units failing to comply with the terms of this guarantee shall be replaced with new units without additional cost to the Government. The Contractor shall require the manufacturer to execute their warranties in writing directly to the Government.

B202003 1.1.4 Design

a. Structural Requirements, as measured in accordance with ANSI/ASTM E330:

1) Wind loads for exterior assemblies: Provide systems capable

of performing at a minimum C acting inward and 25 psf (122 Kg/m2) acting outward. Design system to withstand this as a minimum and comply with design pressure established within the required ASCE 7-05 Wind Speed Calculations determined by the overall average opening within the project.

2) Deflection: Maximum calculated deflection of any framing member in direction normal to plane of wall when subjected to specified design pressures for spans up to and including 13'-6" shall be limited to 1/175 of its clear span and for spans greater than 13'-6" deflection shall be limited to 1/240 + 1/4" of its clear span, except that maximum deflection of members supporting plaster surfaces shall not exceed 1/360 of its span.

3) Water Penetration/Water infiltration - No uncontrolled leakage when tested in accordance with ASTM E331 at test pressure of 10 psf (48.6 Kg/m2) for system standard and capable of performing within the Design Pressure requirements derived from the ASCE 7-05 requirements.

4) Air Infiltration - Air leakage through fixed light areas of storefront shall not exceed 0.06 cfm per square foot of surface area when tested in accordance with ASTM E283 at differential static pressure of 26.24 psf (30.32 Kg/m2).

b. Delamination: Adhesively bonded metal-faced or glass faced panels shall show no evidence of delamination, warpage or other deterioration or damage when subjected to the six "Accelerated Aging Cycles" specified in ASTM D 1037.

c. Thermal Conductance: The thermal transmittance of opaque panels shall not exceed the specified U-value, when tested in accordance with ASTM C 236. The average calculated thermal transmittance of the complete wall assembly including panels, windows, and all other components shall not exceed a U-value necessary to meet the energy budget of the facility. Determine U-values of components in accordance with ASTM C 236.

d. Window Tests: Windows shall meet the requirements specified herein. Windows shall meet the same requirements for deflection and structural adequacy as specified for framing members when tested in accordance with ASTM E 330 except permanent deformation shall not exceed 0.4 percent; there shall be no glass breakage, and no permanent damage to fasteners, anchors, hardware, or operating devices. Windows shall have no water penetration when tested in accordance with ASTM E 331.

e. Fire Resistance Tests: Insulation provided in the curtain wall system or field applied in conjunction with the curtain wall system shall have a flame spread rating not exceeding 75 and a smoke developed rating not exceeding 150 when tested in accordance with ASTM E 84, except as specified otherwise herein.

1) Insulation: Insulation contained entirely within panel assemblies which meet the flame spread and smoke developed ratings of 75 and 150 respectively. Insulation isolated from the building interior by masonry walls, masonry cavity walls, or encased in masonry cores is not required to comply with the flame spread and smoke developed ratings specified.

2) Curtain Wall Systems: Material for firestopping the

opening between the edge of the floor slab and back of the curtain wall system, shall have not less than the flame spread and smoke developed ratings specified for insulation which is neither isolated from the building interior nor encased in masonry cores.

3) Curtain Wall Panels: Panels for fire resistive curtain walls shall have the required fire resistive rating when tested in accordance with ASTM E 119.

4) Firestopping Materials and Devices: Firestopping material and attachment devices shall be an effective barrier against the spread of fire, smoke, and gases for the required period of when exposed to the conditions of the standard ASTM E 119 time-temperature curve for a period equivalent to the fire rating of the floor system and shall also be rated noncombustible when tested in accordance with ASTM E 136.

B202003 1.1.5 Tolerances

Design and erect wall system to accommodate tolerances in building frame and other contiguous work. Provide with the following tolerances:

a. Maximum variation from plane or location shown on DOR-approved shop drawings: 1/8 inch (3 mm) per 12 feet (3.7 meters) of length up to not more than 1/2 inch (13 mm) in any total length.
b. Maximum offset from true alignment between two identical members abutting end to end in line: 1/16 inch (1.6 mm).

B202003 1.1.6 Structural Requirements

Deflection and Structural Tests: No curtain wall framing member shall deflect, in a direction normal to the plane of the wall, more than 1/175 of its clear span or 3/4 inch (20 mm), whichever is less, when tested in accordance with ASTM E 330, except that when a plastered or gypsum board surface will be affected the deflection shall not exceed 1/360 of the span. No framing member shall have a permanent deformation in excess of 0.2 percent of its clear span when tested in accordance with ASTM E 330 for a minimum test period of 10 seconds at 1.5 times the design wind pressures specified.

B202003 1.1.7 Thermal Movement

Fabricate, assemble, and erect system with adequate allowances for expansion and contraction of components and fastenings to prevent buckling damage, joint seal failure, glass breakage, undue stress on fastenings or other detrimental effects.

B202003 1.1.8 Curtain Wall Components

The curtain wall and the components listed below shall be designed to meet the performance requirements below.

a. Framing Members in Curtain Wall Main Frames and Sash or

Ventilator Members: extrusion strength shall meet or exceed the physical properties required for minimum ultimate tensile yield strength of 16,000 psi (110 MPa) when tested under AA ASDI, ASTM E34, and ASTM B221M (or ASTM B221).

b. Joint and Glazing Sealants: Perform tests as required by ASTM C 920.

c. Preformed Compression Gaskets and Seals: ASTM C 864.

d. Preformed Lock-strip Gaskets: ASTM C 542, modified as follows: Heat age specimens seven days at 158 degrees F (70 degrees C), in zipped or locked position under full design compression. Unzip, cool for one hour, re-zip, and test lip seal pressure, which shall be minimum 2.5 pounds per linear inch on any extruded or corner specimen.

e. Spandrel Glass: Fallout resistance test, ASTM C 1048.

f. Porcelain Enamel: Acid resistance, color retention, and spall resistance tests, PEI 1001.

g. Anodized Finishes: Aluminum used for framing shall have a color anodized NAAMM MFM finish designation AA-MIO-C22-A34 and AA-MIO-C22-A44, meeting the requirements of AAMA 611.

h. Glass and Glazing:

1) Conform to paragraph B202004, GLAZING.

2) Insulating Glass shall meet ASTM E 546 or ASTM E 576 at minus 20 degrees F (minus 29 degrees C), no frost or dew point.

i. Firestopping Material - Mineral fiber manufactured from asbestos-free materials, and conforming to ASTM C 612 or ASTM C 665, meeting fire resistance requirements specified.

j. Screens - ASTM D 3656, Class 2, 18 by 14 mesh, color charcoal.

k. Panels - Unless otherwise indicated, design for installation from outside the building. Provide vapor retarder on interior face of insulation. Seal edges of panels with cores of absorptive material to prevent entrance of water and allow venting of the core space to outside air.

1) Metal Facing Panels, Single Thickness - Metal facing panels shall be single thickness. Panel facing shall be flat sheet or textured type, made of porcelain enamel, aluminum, bronze, stainless steel and, with backside stiffeners or edge flanges spaced as required to meet flatness specified.

2) Adhesively Bonded Panels - Adhesively bonded panels shall be sandwich type, metal faced both sides, and bonded to form stable and composite unit. Nonexposed face shall be galvanized steel. Exposed face shall be porcelain enamel, aluminum, bronze, or stainless steel, with continuous laminated backing or internal stiffening ribs or breaks spaced as required to meet flatness specified.

3) Nonmetallic Panels

a) Panels shall be glass-faced on the side that will be exposed to view. Glass shall be spandrel glass with ceramic coating on its non-weathering surface and smooth finish on the exposed surface; backing shall be adhesively bonded to non-weathering surface.

b) Adhesively bonded insulated panels shall be nonmetallic faced, sandwich type, tempered hardboard on exposed face and on non-exposed face. Apply coating of epoxy or polyester followed by application of inert aggregate to exposed face in the factory. Inert aggregate shall be natural stone chips.

l. Metal Windows – Conform to ANSI/AAMA/WDMA 101. Provide inside glazing with removable metal glazing beads except for windows with structural glazing. Factory finish aluminum windows and provide with aluminum frame screens with aluminum mesh at operable sash, hardware and locks, and tinted glazing. Aluminum screens shall comply with ANSISMA 1004.

Exposed aluminum surfaces shall be factory finished with an AA 45 anodic coating or an AAMA organic coating. Provide a minimum of architectural Class II anodized coating or a baked enamel finish conforming to AAMA 2604 for residential construction. Provide a minimum of architectural Class I anodized coating or a high-performance organic coating conforming to AAMA 2605 for non-residential (commercial) construction. AAMA coatings shall have a total dry film thickness of 1.23 mils.

m. Metal Accessories - Provide gravel stops and fascias, flashings, metal sills, metal stools, louvers, venetian blind pockets, and closures. Fabricate accessories of sizes and shapes indicated from similar materials and finish as specified for the wall system.

B202004 EXTERIOR GLAZING

Provide setting and sealing materials, stops and gaskets as recommended by the glass or acrylic sheet manufacturer.

Provide warranty for insulating glass units for a period of 10 years against development of material obstruction to vision (such as dust or film formation on the inner glass surfaces) caused by failure of the hermetic seal, other than through glass breakage. The Contractor shall require the glazing warranty for curtain wall glazing to be written directly to the Government.

Provide warranty for polycarbonate sheet glazing for a period of 5-years against breakage, coating delamination, and yellowing.

Glazing thickness indicated in the following paragraphs is the minimum acceptable thickness. Provide thicker glazing if required by the manufacturer for the given application.

B202004 1.1 GLASS

B202004 1.1.1 Clear Glass

Type I, Class 1 (clear), Quality q4 (A).

B202004 1.1.2 Heat-Absorbing Glass

ASTM 1036, Type I, Class 2 (heat absorbing and light reducing), Quality q3 (select), 1/4 inch (6 mm) thick, with a light transmittance of approximately 45 percent and total solar transmittance of not more

than 50 percent for 1/4 inch (6 mm) thickness. Use warm color tint for warm color frames and cool color tints for white and gray frames.

B202004 1.1.3 Wire Glass

B202004 1.1.3 Wire Glass

Type II, Class 1, Form 1, Quality q8 Mesh m1 or Form 2, Quality q7, Finish f1, Mesh m1, 1/4 inch (6 mm) thick. Conform to NFPA 80. Glass for fire-rated windows shall be UL listed and shall be rated when tested in accordance with ASTM E 163.

B202004 1.1.4 Laminated Glass

ASTM 1172, fabricated from two pieces of Type I, Class 1, Quality q3 glass laminated together with a clear 0.030 inch (0.75 mm) thick polyvinyl butyral interlayer. The total thickness shall be nominally 1/4 inch (6 mm). Laminated glass used for anti-terrorism window assemblies must be a minimum of 1/4 inch (6 mm) thickness.

B202004 1.1.5 Insulating Glass Units

Provide insulated glass using a combination of the interior and exterior glazing materials listed below filled with a thermal resistive gas. The air space shall be sized to meet the thermal requirements below but not less than one half inch(12 mm) for non-residential construction and one quarter inch(6 mm) minimum for residential construction.

Provide active solar control glazing by using tinting, maximum thermal resistance, special coatings to meet Energy Star climate zone and window type requirements(including frames), and comply with the performance characteristics below. Provide an active low-emissivity coating on glass surface number 2 (the inside surface of the exterior glass pane).

If the building is located in a heat dominated climate zone, the facility is designed to utilize solar heat gain to augment the HVAC system, and the window overhang design prohibits excessive solar gain; a passive low-emissivity coating may be used to accommodate the design. Occupied spaces adjoining passive low-emissivity coated glass must be designed for comfortable use of the space.

Provide two panes of glass separated by a dehydrated airspace and hermetically sealed. Dimensional tolerances shall be as specified in IGMA TR-1200. The units shall conform to ASTM E 773 and ASTM E 774, Class A. Provide primary seal, secondary seal, and spacers to eliminate moisture and hydrocarbon vapor transmission into airspace. Warranty insulating glass units against development of material obstruction to vision (such as dust, fogging, or film formation on the inner glass surfaces) caused by failure of the hermetic seal for a 10-year period following acceptance of the work.

The interior glass pane shall be one of the following:

1. Typically ASTM C 1036, Type I, Class 1, Quality q4, minimum 1/4

inch (6 mm) thick;

2. ASTM C 1048, Grade B (fully tempered), Style I (uncoated), Type I, Class 1 (transparent), Quality q4, minimum 1/4 inch (6 mm) thick when required by ANSI Z97.1 or possible human impact is anticipated;
3. ASTM C 1172, laminated glass as specified above, when required by antiterrorism requirements.

The exterior glass pane shall be one of the following:

1. Typically ASTM C 1036, Type I, Class 2 (tinted heat absorbing or reflective), Quality q4, minimum 1/4 inch (6 mm) thick;
2. ASTM C 1048, Grade B (fully tempered), Style I (uncoated), Type I, Class 2 (tinted heat absorbing or reflective), Quality q4, minimum 1/4 inch (6 mm) thick when required by ANSI Z97.1 or possible human impact is anticipated.

Insulating glass performance for active solar control using low-emissivity coatings:

1. Visible Light Transmission, 66% or lower

2. Outdoor Light Reflectance, 11% or greater

3. Solar Heat Gain Coefficient, .36 or lower

4. Winter U-Value, .35 Btu/square foot x hr x degree F or lower for residential construction and .29 Btu/square foot x hr x degree F or lower for all other types of construction.

B202004 1.1.6 Tempered Glass

ASTM C 1048, Kind FT (fully tempered), Condition A (uncoated), Type I, Class 1 (transparent) or 2 (tinted heat absorbing, Quality q3, 1/4 inch (6 mm) thick.

B202004 1.1.7 Bullet-Resisting Glass

ASTM 1172 and UL 752, fabricated from Type I, Class 1, Quality q3 glass with polyvinyl butyral plastic interlayers between the layers of glass and listed by UL ABPMED as bullet resisting, with a power rating of Medium—Small Arms, High—Small Arms, Super—Small Arms, High—Rifle, or as required by the building program in accordance with UL 752.

B202004 1.1.8 Patterned Glass

ASTM 1036, Type II, Class 1 (translucent), Form 3 (patterned), Quality q7 (decorative), Finish f1 (patterned one side), Pattern p2 (geometric) 7/32 inch (5.55 mm) thick.

B202004 1.1.9 Spandrel Glass

ASTM C 1048, Kind HS or FT, Condition B (ceramic coated), Type I, Quality q5, 1/4 inch (6 mm) thick.

B202004 1.1.10 Spandrel Glass with Adhered Backing

ASTM C 1048, Kind HS or FT, Condition B (ceramic coated), Type I, Quality q5, 1/4 inch (6 mm) thick and shall pass the fallout resistance test specified in ASTM C 1048.

B202004 1.2 PLASTIC GLAZING

All plastic glazing exposed to the interior or exterior environment shall have an applied hardcoat.

B202004 1.2.1 Bullet-Resistant Plastic Sheet

Provide cast acrylic sheet or mar-resistant polycarbonate sheet laminated with a special interlayer, and listed in UL 752 as bullet resisting, Class I, II, III, clear, or in color.

B202004 1.2.2 Acrylic Sheet Glazing

ASTM D 4802, Type I, regular, Type II, heat resistant, in various thicknesses, clear or colored.

B202004 1.2.3 Polycarbonate Sheet Glazing

ASTM D 3595, ANSI Z97.1, Mar-resistant, Clear and smooth both sides when used for vision glazing; Translucent, textured both sides when used for obscure glazing, tint to match frame, ultraviolet stabilized, thickness to be specified in mm and inches, and listed in UL ABPMED as burglar resisting. Mar-resistant sheet shall have a change in haze of between 5 and 8 percent under silica carbide test, 56.44 ounces (1600 grams), ASTM D 673.

B202004 1.3 FRAGMENT RETENTION FILM FOR GLAZING

Existing windows that will not be replaced in the project shall have fragment retention film if they require antiterrorism protection. The film shall be polyester, polyethylene terephthalate, or a composite. Fragment retention film shall be optically clear and free of waves, distortions, impurities, and adhesive lines. The film may be a single layer or laminated. Lamination of the film shall only occur at the factory of the fragment retention film manufacturer. The film shall include an abrasion resistant coating on the surface that does not receive the film adhesive. Fragment retention film shall be a minimum thickness of 0.004 inch (0.1016 mm), or 0.007 inch (0.1778 mm), or 0.010 inch (0.254 mm). The film shall be supplied with an optically clear weatherable pressure sensitive adhesive. The adhesive shall contain ultraviolet inhibitors to protect the film for its required life and shall limit ultraviolet transmission to not more than 8 percent of the radiation between 300 and 380 nanometers. The adhesive shall not be water activated. A water-soluble detackifier or release liner may be incorporated over the adhesive to facilitate film application. The adhesive shall be 90 percent cured within 30 days of installation. Adhesives on film thicknesses of 0.010 inch (0.254 mm) and greater shall be a minimum of 0.0008 inch (0.02032 mm) thick.

B202090 OTHER EXTERIOR WINDOWS

B202090 1.1 OPERABLE TRAY PASS WINDOWS

Frames and glass channels shall be of heavy type 6063-TS aluminum extrusions with reinforcing as required. Include bullet-resistant glazing and heavy-duty operable pass tray. Unit shall have a minimum of architectural Class I anodized coating or a high-performance organic coating conforming to AAMA 2605. AAMA coatings shall have a total dry film thickness of 1.2 mils.

B2030 EXTERIOR DOORS

Exterior doors shall be heavy duty insulated steel doors and frames for service access. Door frames shall be welded. Corner knockdown door frames are not permitted.

Use heavy-duty overhead holder and closer to protect doors from wind damage. Provide kickplates on the inside face of all exterior doors.

Weather-protect all exterior doors and related construction with low infiltration weatherstripping and sealants. Provide threshold with offset to stop water penetration while maintaining accessibility compliance.

Conform to the design criteria of ASCE 7.

See section B203008, EXTERIOR DOOR HARDWARE, for door hardware requirements. For all installations, provide a recessed key box (Knox Box) approximately 7 inches x 7 inches (175 mm x 175 mm) with 4-3/4 inches (120 mm) solid steel door at primary exterior entry for storage of keys and access cards accessible by the fire department.

B203001 SOLID DOORS

B203001 1.1 STEEL DOORS

Hardware preparation shall be in accordance with ANSI A250.6. Doors shall be hung in accordance with ANSI A115.16.

B203001 1.1.1 Steel Doors

Steel doors shall be ANSI A250.8, Level 4, exterior, main entry doors, with a physical performance level of, Model 1 or 2.

Doors may be specified to be insulated. Door selection shall be specified in the project program according to the following:

a. Standard Duty Doors - Level 1, physical performance Level C, Model [1] [2]
b. Heavy Duty Doors - physical performance Level B, Model [1] [2]
c. Extra Heavy Duty Doors – ANSI A250.8, Level 3, physical performance Level A, Model [1] [2] [3]
d. Maximum Duty Doors – ANSI A250.8, Level 4, physical performance Level A, Model [1] [2]

B203001 1.1.2 Residential Insulated Steel Entry Door Systems

Insulated steel doors and frames shall be provided for residential

construction with a core of polyurethane foam and an R factor of 10.0 or more (based on a k value of 0.16). Face sheets, edges, and frames of galvanized steel not lighter than 23 gage thick (0.7 mm) for paneled door faces, or 16 gage thick (1.5 mm) for solid doors, with vinyl door bottom flashing. Frames shall be a minimum 16 gage thick (1.5 mm) respectively; with magnetic weatherstripping; nonremovable-pin hinges; thermal-break aluminum threshold. Doors and frames shall receive phosphate treatment, rust-inhibitive primer, and baked acrylic enamel finish. Doors shall have been tested in accordance with ANSI A250.4 and shall have met the requirements for Level C. Prepare doors to receive specified hardware. Doors shall be 1-3/4 inch (44.5 mm) thick.

B203001 1.1.3 Insulation Cores

Insulated cores shall be of type specified, and provide an apparent U-factor of .48 in accordance with SDI 113 and shall conform to:

a. Rigid Polyurethane Foam: ASTM C591, Type 1 or 2, foamed-in-place or in board form, with oxygen index of not less than 22 percent when tested in accordance with ASTM D2863; or
b. Rigid Polystyrene Foam Board: ASTM C578, Type I or II; or
c. Mineral board: ASTM C612, Type I.

B203001 1.1.4 Accessories

a. Louvers shall comply with SDI 111-C, shall be stationary, sight-proof type. Use lightproof louvers if function of room requires darkness. Louver frames shall be 20-gage steel with louver blades minimum 24 gage.
b. Astragals: For pairs of exterior steel doors that will not have aluminum astragals or removable mullions, provide overlapping steel astragals with the doors.
c. Moldings: Provide moldings around glass of exterior doors and louvers. Provide non-removable moldings on outside of exterior doors. Secure inside moldings to stationary moldings, or provide snap-on moldings. Muntins shall interlock at intersections and shall be fitted and welded to stationary moldings.

B203001 1.1.5 Standard Steel Frames

ANSI A 250.8. Form frames with welded corners for installation in exterior walls. Form stops and beads of 20 gage steel. Frames shall be set in accordance with ASTM A250.11.

B203001 1.1.6 Anchors

Anchor all frames with a minimum of three jamb anchors and base steel anchors per frame, zinc-coated or painted with rust-inhibitive paint, not lighter than 18 gage. Mortar infill frames in masonry walls, and infill with gypsum board compound at each jamb anchor in metal frame walls. Only use surface exposed bolted anchors in concrete walls.

B203001 1.1.7 Finishes

a. Exterior Doors, Factory-Primed and Field Painted Finish – Doors and frames shall be factory primed with a rust inhibitive coating as specified in ANSI A250.8. Factory prime doors on six sides of the door. Manufacturer's primer and field painting shall be compatible with finish system in the paragraph "EXTERIOR PAINTING AND SPECIAL COATINGS".
b. Exterior Doors Galvanized Finish – Shall be Commercial Quality, Coating Class A, zinc coating in accordance with ASTM A 591 when facility is located further than 300 feet (91 meters) from the ocean. When facility is located within 300 feet (91 meters) of the ocean, provide G60 galvanized coating in accordance with ASTM A 924/A 924M and ASTM A 653/A 653M.

B203001 1.2 WOOD DOORS

Solid wood or particleboard core with solid wood edge bands and reinforced at all hardware attachments to door with sound grade hardwood. Exterior wood doors are only allowed in residential construction where facility design, overhangs and porches eliminate direct rain/moisture contact from wind driven rain.

B203001 1.2.1 Stile and Rail Doors

Stile and rail doors shall be premium or custom grade Ponderosa pine stile and rail doors conforming to WDMA I.S.6A-01, heavy duty.

B203001 1.2.2 Flush Doors

Flush doors shall conform to WDMA I.S.1-A.

Exterior Flush Doors - Solid wood core, Type I conforming to WDMA I.S. 1-A.

B203001 1.2.3 Wood Door Louvers

Door louvers shall be of the manufacturer's standard design and shall transmit a minimum of 35 percent free air. Louver shall be a galvanized coated louvers with insect screens and comply with SDI 111-C, shall be stationary, sight-proof type. Use lightproof louvers if function of room requires darkness.

B203001 1.2.4 Door Light Openings

Where glazed openings are required, use the manufacturer's standard wood moldings. Moldings for doors to receive a natural finish shall be of the same species and color of the face veneer.

B203001 1.2.5 Fabrication

a. Marking - Each door shall bear a stamp, brand or other identifying mark indicating quality and construction of the door.
b. Adhesives and Bonds - WDMA I.S. 1-A. Use Type I bond for exterior doors. Adhesive for doors to receive a natural finish shall be non-staining.

B203002 GLAZED DOORS

B203002 1.1 ALUMINUM GLAZED DOORS

See B202002 STOREFRONTS, paragraph titled, "Doors and Frames."

B203004 OVERHEAD AND ROLL-UP DOORS

Large exterior overhead and roll-up doors system shall consist of manual or automatic exterior doors and door assemblies. Do not use roll-up doors on exterior walls of conditioned spaces.

B203004 1.1 ROLLING SERVICE DOORS AND GRILLES

Coiling overhead doors shall have minimum 22 gage thermal insulated slats. Electric operators shall have 3-button switches conforming to NEMA MG 1, NEMA ICS 1, and NEMA ICS 2, and auxiliary hand chain operation, weather-stripping and wind-locks. Doors shall be capable of withstanding the design wind loading of ASCE 7 and still operate normally. Finish of the door shall be hot-dipped galvanized with a painted finish.

B203004 1.2 SECTIONAL OVERHEAD DOORS

Sectional overhead doors shall conform to NAGDM 102, Residential or Commercial or Industrial door standards. Metal doors shall be horizontal sections hinged together which operate in a system of tracks to completely close the door opening in the closed position and make the full width and height of the door opening available for use in the open position. Doors shall be of the standard lift type designed to slide up and back into a horizontal overhead position and requiring a maximum of 16 inches (400 mm) of headroom for 2 inch (50 mm) tracks and 21 inches (525 mm) of headroom for 3 inch (75 mm) tracks, unless a low headroom type is required due to limited headroom, or a high lift type or vertical lift type is required to allow additional working clearance in the area immediately inside the door. If doors are electrically operated, pushbuttons shall be full-guarded to prevent accidental operation, and include limit switches to automatically stop doors at the fully open and closed positions. Limit switch positions shall be readily adjustable.

Doors shall be capable of withstanding the design wind loading of ASCE 7. Doors shall remain operable and undamaged after conclusion of tests conducted in accordance with ASTM E 330 using the design wind load. Form door sections of hot-dipped galvanized steel not lighter than 16 gage with flush surface without ribs or grooves. Sections shall be not less than 2 inches (50 mm) in thickness. Insulate door sections with fibrous glass or plastic foam to provide a "U" factor of 0.14 or less when tested in accordance with ASTM C 236. Cover interior of door sections with steel sheets of not lighter than 24 gage to completely enclose the insulating material. Provide galvanized steel tracks not lighter than 14 gage for 2 inch (50 mm) tracks and not lighter than 12 gage for 3 inch (75 mm) track. Provide a positive locking device and cylinder lock with two keys on manually operated doors.

B203005 HANGAR DOORS

DOR utilize UFGS Specification Section 08 34 16.10, *Steel Sliding Hangar Doors*,

or Specification Section 08 34 16.20, *Vertical Lift Fabric Doors*, for the project specification submittal for the project. Refer to the Project Program for which type of hanger door is used on this project.

B203008 EXTERIOR DOOR HARDWARE

Provide the services of an Architectural Hardware Consultant(AHC), Certified Door Consultant(CDC), or an Electrified Hardware Consultant(EHC) to assist the Designer of Record in preparation of the door hardware schedule and product selection. The hardware consultant shall sign and seal the door hardware construction submittal. Provide, as far as possible, door hardware of one manufacturer’s make. All hardware shall be clearly and permanently marked by the manufacturer where it will be visible after installation.

B203008 1.1 HINGES

BHMA A156.1, size to match door size, but in no case less than 4-1/2 x 4-1/2 inches (114 mm x 114 mm), with non-removable pin and anti-friction bearing hinges. Use two hinges for doors 60 inches (1500 mm) or less in height and one additional hinge for each additional 30 inches (750 mm), or fraction thereof, in door height.

B203008 1.2 PIVOTS

BHMA A156.4.

B203008 1.3 LOCKS AND LATCHES

Commercial (all construction except family housing) buildings locks and latches shall be BHMA A 156.13, Series 1000, Operational Grade 1, Security Grade 2 for exterior building entrances and other high-use doors not requiring exit devices. Use BHMA A 156.2, Series 4000, Grade 1 for all Commercial buildings locks and latches not using Series 1000 hardware.

For Residential (family housing) projects, use Series 4000, Grade 2 hardware.

B203008 1.3.1 Combination Locks for Sensitive Areas and Vault Doors

If required for exterior use, see C102007 1.1.6 "Combination Locks" for the specification. This installation may require special weather protection.

B203008 1.3.2 Pushbutton Combination Locks

Where required, provide a heavy-duty, mechanical combination lockset with 5 pushbuttons, standard-sized knob or lever, 3/4 inch (19 mm) deadlocking latch with 2-3/4 inch (70 mm) back-set. Provide deadbolt key override option. Safelock, Simplex, and Venn are acceptable manufacturers. Provide a hardware grade equivalent to Grade 1, series 4000. Include a 5-year parts and labor warranty.

B203008 1.4 CARD KEY SYSTEM

Where required, provide card key type access units. Provide lithium battery powered, magnetic stripe keycard locksets that are ANSI/BHMA A156.13, Series

1000, Grade 1, mortise or ANSI/BHMA A156.2, Series 4000, Grade 1, cylindrical locks, tamper resistant, UL listed with 1 inch (25 mm) throw deadbolt, 3/4-inch (19 mm) throw latch bolt, auxiliary deadlocking latch, and 2-3/4 inch (68.75 mm) backset. The latch bolt and the dead bolt shall be operated simultaneously by rotating inside lever. Locks with mechanical override lock cylinders are not acceptable. Locks shall be operated only by a correctly encoded keycard. Use of a newly issued keycard automatically re-keys the lock and voids the previous keycard. The lock shall re-lock immediately after outside lever is turned and latch retracted. Locks shall have memory that is capable of recording up to 140 entries into each room, identification of the keycard used to access the room, the date and time of entry. Entry information of the lock shall be retrievable by a data key that can be inserted into the lock and then taken to the front desk printer to display information. Other components that are required for this system at the front desk are a personal or laptop computer, printer and encoder to program each key.

For exit device locks with card key access, provide mortise type, narrow stile exit devices with 24 volt DC, solenoid option for card key exterior access at aluminum storefront doors. Provide mortise type exit devices with 24 volt DC, solenoid option with alarm and remote exterior access for card key access at insulated hollow metal doors. The alarmed exit device shall sound when exiting only.

System shall be capable of accepting a minimum of 12 keycard access levels, security auditing and computer interfacing with existing installations management system. Provide a single point of contact customer service representative accessible by telephone with a 10-digit telephone number without additional dialing hierarchies except that a maximum 4-digit extension is permissible. On-site service shall be provided within 3 hours from request within the first 12 months of occupancy. Provide a 5-year parts and labor warranty.

B203008 1.5 EXIT DEVICES

BHMA A 156.3, Grade 1. Provide on exit doors if it is anticipated that more than 50 people may use a particular door in an emergency exit situation. Touch bars shall be provided in lieu of conventional crossbars and arms. Use manufacturer's integral touch bars in aluminum storefront doors.

B203008 1.6 EXIT LOCKS WITH ALARM

BHMA A 156.5.

B203008 1.7 CYLINDERS AND CORES

If required, provide cylinders and cores for new locks, including locks provided under other sections of this specification. Cylinders and cores shall have seven pin tumblers. Cylinders shall be products of one manufacturer, and cores shall be the products of one manufacturer. Rim cylinders, mortise cylinders, and knobs of bored locksets shall have interchangeable cores, which are removable by special control keys. Stamp each interchangeable core with a key control symbol in a concealed place on the core.

B203008 1.8 KEYING SYSTEM

Keying system shall be a master key system for the facility, unless more than one tenant/tenant command shall reside in a facility, or a grand master keying system, or great, grand master keying system if multiple tenants or buildings are required. The keying system shall be an extension of the existing keying system for additions to existing facilities. The keying system shall allow for construction interchangeable cores when subcontractors require keys during construction. If required, provide a key cabinet.

The Contractor shall coordinate a keying system meeting. The Contractor's Project Manager, Superintendent, Hardware Subcontractor, Electrical Subcontractor (if keying hardware is electric), Designer of Record, Contracting Officer, Public Works Base Hardware Specialist, and the Using Activity shall attend this meeting to establish the keying system for the project. This meeting is intended to identify base limitations, the necessary security, and access control within the facility. The meeting shall produce a marked up copy of the floor plan indicating the doors to receive locks and the doors to be keyed together, and any master keying or grand master keying.

B203008 1.9 KEYS

Furnish one file key, one duplicate key and one working key for each key exchange and for each master and grand master keying system.

B203008 1.10 LOCK TRIM

Cast, forged or heavy wrought construction and commercial plain in design.

B203008 1.10.1 Knobs and Roses

Knobs and roses shall meet test requirements of BHMA A 156.2 and BHMA A 156.13.

B203008 1.10.2 Lever Handles

Provide lever handles in lieu of knobs as required by DoD ABAAS. Lever handles shall meet the test requirements of BHMA A 156.13 for mortise locks. All lever handles (mortise or cylinder) shall be the freewheeling type.

B203008 1.11 DOOR BOLTS

BHMA A 156.16, Grade 1. Provide two flush bolts for each inactive leaf of a pair of doors.

B203008 1.12 CLOSERS

BHMA A 156.4, Series C02000, Grade 1, with PT 4C, 1-1/2 inch piston, heavy duty forged arm, full size case. Provide closers for all exterior doors, fire-rated doors, corridor doors, stairway doors, and secure area doors, for non-residential (commercial) construction, as a minimum.

B203008 1.13 OVERHEAD HOLDERS

BHMA A 156.8, Grade 1. Provide for exterior doors for non-residential (commercial) construction.

B203008 1.14 DOOR PROTECTION PLATES

Kick plates shall conform to BHMA A 156.6. Provide kick plates on all doors with closers and all doors leading to corridors or circulation spaces. Provide armor plates on all doors to receive cart traffic. Provide mop plates on all doors in rooms with a mopable floor finish that do not have kick plates.

B203008 1.15 DOOR STOPS AND SILENCERS

BHMA A 156.16. Provide silencers, Type L03011, three per single door and four per double door, for doors in hollow metal frames.

B203008 1.16 THRESHOLDS

BHMA A 156.21. Provide thresholds with offset to stop water infiltration, while maintaining accessibility requirements.

B203008 1.17 WEATHERSTRIPPING

BHMA A 156.22. Air leakage of weatherstripped doors shall not exceed 0.5 CFM of air per square foot of door for residential doors, and 1.25 CFM for non-residential doors (unless a more restrictive infiltration level is specified).

B203008 1.18 RAIN DRIPS

For all exterior doors that open to the outside, where the door swing area is not covered by an overhang, provide top and bottom rain drips complying with ANSI R3Y535 as a minimum. Greater weathersealing may be required by the geographic location of the project.

B203008 1.19 FINISHES

One of the following hardware finish systems shall be provided, and match the interior door hardware:

a. BHMA A156.18. Hardware shall have BHMA 630 finish (satin stainless steel), unless specified otherwise. Provide items not manufactured in stainless steel in BHMA 626 finish (satin chromium plated) over brass or bronze, except surface door closers which shall have aluminum paint finish, and except steel hinges which shall have BHMA 652 finish (satin chromium plated). Hinges for exterior doors shall be stainless steel with BHMA 630 finish or chromium plated brass or bronze with BHMA 626 finish. Exit devices may be provided in BHMA 626 finish in lieu of BHMA 630 finish. Exposed parts of concealed closers shall have finish to match lock and door trim. Hardware for aluminum doors shall be finished to match the doors.
b. BHMA A156.18. Hardware shall have BHMA 612 finish (satin bronze), unless specified otherwise. Surface door closers shall have bronze paint finish. Steel hinges shall have BHMA 639 finish (satin bronze plated). Exposed parts of concealed closers shall have finish to match lock and door trim. Hardware for aluminum doors shall be

finished to match the doors. Hardware showing on interior of bathrooms, shower rooms, toilet rooms, washrooms, laundry rooms, and kitchens shall have BHMA 629 finish (bright stainless steel) or BHMA 625 finish (bright chromium plated).

B203090 OTHER EXTERIOR SPECIALTY DOORS

Where required, provide special function exterior doors and gates and assemblies required for the proper operation and functioning of the facility. Exterior doors system may include factory-finished or painted doors and frames.

B203090 1.1 AUTOMATIC ENTRANCE DOORS

B203090 1.1.1 Automatic Swinging Entrance Door Controller

Automatic swinging entrance doors shall be glazed aluminum doors and frames as specified in this section. Controller shall be a dual function safety device that utilizes planar K-band microwave motion detectors and active infrared presence sensors at each door to protect individuals in the path of the swinging door. The planar K-band motion detector shall be capable of sensing an individual moving as slow as 2.2 inches (55.8 mm) per foot. The infrared sensors shall employ both diffused presence sensors that see through the plane of the door, and distance measuring sensors. The infrared sensors shall constantly remain in operation. The safety device shall call for reactivation or creep closing function, depending on the location of the sensor. If the sensor is located on the swing side, it will call for reactivation; if it is located on the pull side, it will call for creep closing function. Sensing system shall be fully adjustable with a universal remote control, and meet or exceed the requirements of ANSI A156.10. System shall include aluminum guard rails and signage for additional personnel safety.

B203090 1.1.2 Automatic Sliding Entrance Door Controller

Automatic sliding entrance doors shall be glazed aluminum doors and frames as specified in this section. Controller shall be a dual function safety device that utilizes planar K-band microwave motion detectors and focused active infrared presence sensors at each door to protect individuals in the path of the sliding door. The planar K-band motion detector shall be capable of sensing an individual moving as slow as 2.2 inches (55.8 mm) per foot. The focused active infrared sensors shall overlap their patterns for full coverage of the motion pattern and extend its range all the way to the floor surface. The infrared sensors shall constantly remain in operation even when the door is in the closing cycle. Door and frame shall have a "break-away" feature that allows the door to be pushed open in an emergency exit situation.

-- End of Section --

THIS PAGE HAS BEEN INTENTIONALLY LEFT BLANK

SECTION B30

ROOFING
11/10

B30 GENERAL

RFP Part 3 including the Engineering System Requirements (ESR) provide project specific requirements. The RFP Part 4, Performance Technical Sections (PTS) provide generalized technical requirements that apply to multiple facility types and include more requirements than are applicable to any one project. Therefore, only the RFP Part 4 requirements that apply to the project and further define the RFP Part 3 project specific requirements are required.

B30 1.1 DESIGN GUIDANCE

Provide the design and installation in accordance with the following references. This Performance Technical Specification (PTS) adds clarification to the fundamental requirements contained in the following Government Standards. The general requirements of this PTS section are located in PTS Section Z10, *General Performance Technical Specification*.

Industry standards, codes, and Government standards that are referenced in the section text that are not found in the Unified Master Reference List (UMRL) in the Construction Criteria Base (CCB) at the Whole Building Design Guide Website are listed below for basic designation identification. Comply with the required and advisory portions of the current edition of the standard at the time of contract award.

B30 1.1.1 Government Standards

UNIFIED FACILITIES CRITERIA (UFC)

UFC 1-200-01	General Building Requirements(A reference in this PTS section to UFC 1-200-01 requires compliance with the Tri-Service Core UFCs that are listed in UFGS Section 01 33 10.05 20, which includes the following significant UFC(s):UFC 3-101-01 ArchitectureUFC 3-110-03 Roofing)

B30 1.2 PERFORMANCE VERIFICATION AND ACCEPTANCE TESTING

Verification of satisfactory roofing system performance shall be via Performance Verification Testing, and by field inspection as detailed in this section of the RFP. All performance and acceptance testing including final/warranty inspections shall be witnessed by the Contracting Officer on all significant roof projects.

A significant roof project is a single or group of buildings greater than 15,000 square feet (1,400 m2) in size, or where extenuating circumstances of the roof project such as building use, content, safety, or visibility

determine the roof design.

B30 1.2.1 Pre-Roofing Design Conference

If required in RFP Part 3, the Contractor shall hold a Pre-Roofing Design Conference with the Contracting Officer. Schedule this conference prior to the roof design and roof layout of the facility. Attendee's shall include the DOR, DQC Manager, Roof Design Assurance Consultant (if applicable), Commissioning Authority, and Subcontractors directly responsible for installing the roof and equipment that will be mounted on the roof. Discuss and coordinate the following as a minimum:

a. Sustainable systems to be mounted on the roof and interface with building systems and utilities,
b. Allocation of space on the roof for different functions,
c. Impact of sustainable systems and building orientation to the suns path,
d. Waterproofing, flashing, and future reroofing considerations of the facility resulting from sustainable systems inclusion on the roof,
e. Measures taken to eliminate penetration of the roof membrane. NRCA roof details proposed for each necessary penetration,
f. Structural requirements to support roof mounted equipment,
g. Aesthetic impact of roof mounted equipment on the facility and measures taken to mitigate negative appearances of equipment.
h. Maintenance and Commissioning requirements of the roof and roof mounted equipment to facilitate final testing and provide proper access and roof membrane protection.

B30 1.2.2 Pre-Roofing Conference

Prior to beginning roofing work, the Contractor shall hold a Pre-Roofing Conference with the Contracting Officer. Attendees' shall include personnel directly responsible for the roofing systems design and construction, DQC Manager, Commissioning Authority, as well as the roofing manufacturer's technical representative, and Roof Design Consultant (if applicable). At this time the Contractor will address any conflicts between the proposed roofing system, the design documents, and the scheduling of work / workers (trades) to assure a watertight roofing installation. Resolutions will be obtained and documented in writing prior to the start of roofing work. A quality assurance/quality control plan shall also be established at this time, inclusive of the roofing manufacturer's recommended testing and inspections procedures, and in accordance with industry standard guidelines.

Contractor shall provide the following additional information at the pre-roofing conference: Procedure for the roof manufacturer’s technical representative's onsite inspection and acceptance of the roofing substrate, roof insulation, and installation of the roofing in accordance with the roof system warranty, the name of the manufacturer's technical representatives, the frequency of the onsite visits, copies of the roof status reports from the technical representatives to the roof manufacturer, and pertinent structural details to the roofing system.

B30 1.2.3 Roof Design Assurance

If the roofing project is significant (defined above) or where extenuating circumstances of the roof project such as building use, content, safety, or visibility require a roofing consultant, the Contractor shall utilize the services of a Registered Roof Consultant (RRC) certified by the Roof Consultant Institute, or a Registered Professional architect or Engineer who specializes in roofing, to approve the roof design. The roof consultant must be engaged in roofing design and roofing construction as his primary endeavor. The roof consultant shall verify in writing that the design for the project is in accordance with the current edition of NRCA *Roofing and Waterproofing Manual*, UFC's, and RFP, and standard industry practices and building codes.

If a Roof Design Assurance Consultant is needed, consider using a Registered Roof Observer as a QC specialist in UFGS Section 01 45 00.05 20, *Design and Construction Quality Control*.

B30 1.2.4 Low Slope Roof Drain Test

Plug roof drains and fill with water to the edge of the drain sump for 24 hours. Not all drains shall be tested at one time. Measure water at the beginning and end of the 24 hour time period to ensure there is no leakage. Repeat testing until all leaks have been located, corrected, and no leaks found.

B30 1.2.5 Tests for Surface Dryness

Prior to application of roofing materials, perform surface dryness tests in presence of DOR. Asphalt of 350 to 400 degrees F (177 to 204 degrees C) shall not foam upon contact with substrate. After foaming test is performed, test for strippability (adherence).

B30 1.2.6 Quality Control Program

Contractor shall establish a quality control program to assure adherence to NRCA recommended Quality Control Guidelines for the Application of Roofing Systems and other specified application requirements. Compliance with UFGS Section 01 45 00.05 20, *Design and Construction Quality Control*, is required.

B30 1.3 DESIGN SUBMITTALS

Design submittals shall be in accordance with Z10, *General Performance Technical Specifications*, UFGS section 01 33 10.05 20, *Design Submittal Procedures*, UFC 1-300-09N, *Design Procedures*and UFC 3-101-01, *Architecture*.

B30 1.4 CONSTRUCTION SUBMITTALS

Submit construction submittals in accordance with PTS Section Z10, *General Performance Technical Specifications*. In addition to the Z10 requirements, the Designer of Record (DOR) shall approve the following submittals as a minimum:

Test reports, color samples, certificates of conformance, warranties, close

out documentation, and manufacturer's instructions for application and installation on all products used on the roof. Products used on the roof consist of but are not limited to structural deck, insulation, membrane or panels, Standing Seam Metal Roofing (SSMR), flashing, fasteners, nailers, accessories and equipment support curbs or equipment support stands for solar equipment, equipment roof plan, maintenance access and paths.

B3010 ROOF COVERINGS

Roof coverings shall comply with the requirements of UFC 3-110-03, *Roofing*, and NRCA, *Roofing and Waterproofing Manual*found at http://www.nrca.net/rp/technical/manual/manual.aspx as the primary NAVFAC roofing criteria. Roof selection shall comply with UFC 3-330-02A, *Design: Commentary on Roof Systems*. Determine wind uplift using wind speed in accordance with ASCE-7.

Submit the INFORMATION CARD (see "Form 1" at the end of this section) Provide a typewritten card, laminated in plastic and framed in a weather-tight frame, or a photoengraved 0.032-inch (0.81 mm) thick aluminum card for the roof. This card shall be a minimum size of 8 1/2 x 11 inch (216 x 280 mm) and contain information listed in the attached Form 1. Install the card where directed. Furnish framed card and a duplicate card to the Designer of Record.

B301001 STEEP SLOPE ROOF SYSTEMS

Slope conversions from low slope to steep slope roofing systems must specifically address temporary waterproofing protection where new framing connections penetrate the existing low slope system.

B301001 1.1 SLATE ROOFING

Slate roofing systems shall be installed in accordance with NRCA Standards.

B301001 1.1.1 Warranty

Contractor shall supply manufacturer's standard warranty against defects in product workmanship and materials, including related metal flashing for a period of 30 years from the date of FINAL acceptance of the work.

B301001 1.1.2 Materials

a. Slate - Slate materials shall meet the grading standards of the National Slate Association. Field punching of slate shall be from the back of the slate.
b. Underlayment Membrane - For standard slate roofs, roofing felts shall be un-perforated asphalt-saturated felts, No. 30 or heavier. For graduated slate roofs, two layers of felts shall be applied with joints and laps staggered. When roof slopes are less than 4:12, a double layer of felt shall be applied in mastic or hot asphalt shall be applied. At the roofing perimeter, eaves, rakes, sidewalls, head walls, valleys and all penetrations, install self-adhering membrane (3 foot band minimum) (900 mm band minimum).
c. Fastening - Nails shall be stainless steel or copper ring shank nails. Nails shall be long enough to penetrate the roof

sheathing with heads of sufficient diameter to prevent pullover of slate. Slate shall hang on the shaft of the fastener, and drawn to, but not tight against the slate surface. Exposed nails on the top courses shall be sealed. In high wind areas, provide mechanical fastening plus sealant adhesive attachment. Provide screws, wire ties, hook nails, tile locks and storm clips of brass, copper or stainless steel as recommended by the manufacturer for the project.

d. Flashing - Flashings for slate roofing shall be 16 oz. (454 g) copper or 24 gage stainless steel, and 16 oz. (454 g) lead-coated copper, and shall be protected to prevent the potential for galvanic action by having contact with dissimilar metals.

e. Snow Guards - Provide snow guards of type compatible with roof system specified, and designed to meet design loads for the project location.

B301001 1.2 ASPHALT SHINGLES

The shingle roofing system shall be installed in accordance with NRCA *Roofing and Waterproofing Manual*(Latest Edition), "Steep Roofing", closed cut valley flashing shall not be allowed and per ASTM D 3462.

B301001 1.2.1 Warranties

The contractor shall furnish to the Government the manufacturer's standard 30-year warranty for the asphalt shingles. The Contractor shall also warrant that the asphalt shingle roofing system, as installed, is free from defects in workmanship. Provide a minimum 10-year fungus resistance warranty in southern climate and areas susceptible to fungus growth on shingles.

B301001 1.2.2 Materials

a. Shingles - Shingles shall meet ASTM D 3018, Type I, and ASTM D 3462, and shall weigh not less than 210 pounds per 100 square feet (95 kg per 9.3 square meters). Shingles shall meet the fire resistance requirements of UL 790 for Class 'A' and resist winds in accordance with ASCE-7 when tested in accordance with UL 997.

b. Shingle Underlayment - Asphalt-saturated felt conforming to ASTM D 226, Type I.

c. Self-Adhering Membrane - Self-adhering rubberized asphaltic membrane, a minimum of 40 mils thick. Provide at all ridges, valleys, sidewalls and starter strips.

d. Nails - 11 or 12 gauge hot-dipped galvanized steel, corrosion resistant roofing nails, with sharp points and flat heads 3/8 inch to 7/16 inch (9.5 mm to 11 mm) diameter. Shank diameter shall be a minimum of 0.105 inch (2.7 mm) to a maximum of 0.135 inch (3.4 mm). Nails shall be long enough to penetrate through all layers of roofing materials and achieve secure anchorage into a roof deck. A minimum of 4 nails shall be used on a full width shingle, and six nails in high wind areas. Location of nails shall be as shown in manufacturers printed installation instructions. Staples are not permitted as a means of attachment.

e. Asphalt Roof Cement - ASTM D 4586, Type II

f. Asphalt Primer - ASTM D 41

B301001 1.3 ROOF TILES

B301001 1.3.1 Warranty

The contractor shall warrant for 30 years that the tile roofing system, as installed, is free from defects in workmanship.

B301001 1.3.2 Materials

a. Clay Tile - ASTM C 1167, machine-formed natural clay tiles, kiln-fired to vitrification and free from surface imperfections. Provide specially shaped units as required to provide watertight installation and closure. Form fastening holes prior to firing.
b. Concrete Tile - ASTM C 1492, molded or extruded, interlocking concrete roofing tile units, and specially shaped as required to provide a watertight installation and closure. Provide with cast-in anchor lugs, transverse weather checks and fastening holes.

B301001 1.3.3 Underlayment

Underlayment type shall be determined by slope as follows:

10:12 slope and above shall have a minimum of one layer of number 30 felt, laid in shingle fashion with a minimum of a 2 inch (50 mm) lap.

4:12 to 10:12 slopes shall have a minimum of 2 layers of number 30 felt or one layer of a modified bitumen underlayment for use with standard size tile as long as tile is laid with a minimum of a 3 inch (75 mm) headlap. Underlayment shall be laid shingle fashion with a 19-inch (480 mm) lap.

Tiles shall not be laid on slopes less than 4:12.

a. Felt Underlayment - Asphalt saturated felt conforming to ASTM D 226, Type I.
b. Flexible Hip, Starter and Ridge Flashing - Provide SBS Modified rubberized asphalt adhesive on a linear, low-density polyethylene membrane with a 60 mil total thickness, or 40 mil thick self-adhered membrane underlayment in accordance with ASTM D 1970. At the roofing perimeter, eaves, rakes, sidewalls, head walls, valleys and all penetrations, install self-adhering membrane (3 foot (900 mm) band minimum).

B301001 1.3.4 Substrate Panels for Application Over Metal Deck

a. Glass Mesh Mortar Units - ASTM E 84, exterior type panels of Portland cement.
b. Fiberglass-Faced Gypsum Roof Board - ASTM 1177/C 1177M

B301001 1.3.5 Fasteners

a. Nails for Applying Felt Underlayment - Hot dip galvanized steel, 11 gage, of sufficient length to penetrate through substrate panels.
b. Materials for Installation of Tile - Nails shall be round-head, sharp point, 11 or 12 gauge, copper or stainless steel ring shank roofing nails. Nail heads shall be low profile, smooth and flat. Shanks may be smooth, barbed or otherwise deformed for added pull out resistance. Nails should be of sufficient length to penetrate one inch (25 mm) into wood ridge and hip boards, or battens, with heads of sufficient size to prevent pullover of the tile.
1) Wind Locks shall be of 10 gage copper or brass, 12 gage galvanized steel, or 0.084 inch (2.1 mm) stainless steel formed wire clips.

2) Provide hurricane clips with two nail holes in the horizontal leg for anchorage to deck or substrate.

3) Provide dual means of attachment of tile as follows, or as recommended by the tile manufacturer: Mechanical fastening plus hurricane clips, mechanical fastening plus foam setting, mechanical fastening plus sealant adhesive attachment of tile to tile in headlap areas.

B301001 1.3.6 Preservative-Treated Lumber - AWPA C1

B301001 1.3.7 Sheet Metal Flashing and Trim

Fabricate sheet metal flashing and trim of 20 oz. Copper, lead-coated copper or stainless steel to comply with SMACNA *Architectural Sheet Metal Manual*.

B301001 1.3.8 Bird-stop for Concrete Tile

Provide 20 oz.(567 g) copper, lead or stainless steel "L" section with 3-inch (75 mm) wide horizontal leg and vertical leg cut to conform to bottom profile of tile, or provide mortar formed bird-stops with weep holes, molded plastic bird-stops, or prefabricated tiles as recommended by roofing tile manufacturer.

B301001 1.3.9 Mortar

ASTM C 270, Type M mortar mix. Mortar set tile shall not be used in high-wind areas.

B301001 1.3.10 Asphaltic Plastic Cement

ASTM D 4586.

B301001 1.3.11 Foam-set Tile

Provide foam plastic adhesive designed to meet the concrete and clay tile roofing industries requirements for adhering roofing tile to specified roof underlayment assemblies. Foam adhesive shall meet ASTM E 84, with a flame spread of less than 75. When tested in accordance with ASTM E 108, the roof covering system shall qualify as a Class 'A' roof covering system.

B301001 1.4 METAL ROOF PANELS (ARCHITECTURAL STANDING SEAM METAL ROOFS ON SUPPORTED SUBSTRATE)

B301001 1.4.1 Manufactured Sheet Metal Roofing

Provide galvanized steel or aluminum-zinc coated steel or aluminum panels formed at the manufacturing plant and conditioned for flatness. Panel thickness shall be determined by the requirements of NRCA, *Roofing and Waterproofing Manual*, but not less than 24 gauge for panels less than 16 inches wide (400 mm), and 22 gauge for panels 16 inches (400 mm) wide or greater. All panels greater than 12 inches (300 mm) wide shall have preformed reinforcing ribs or embossed for stiffening. The minimum gauge for aluminum panels shall be 20-gauge, .032 inch thick (.8 mm thick) or greater. Roofing design shall meet deflection and wind load requirements per building code.

The SSMR system covered under this specification shall include the entire roofing system; the standing seam metal roof panels, fasteners, connectors, roof securement components, and assemblies tested and approved in accordance with ASTM E 1592. In addition, the system shall consist of panel finishes, slip sheet, insulation, vapor retarder, all accessories, components, and trim and all connections with roof panels. This includes roof penetration items such as vents, curbs, skylights; interior or exterior gutters and downspouts; eaves, ridge, hip, valley, rake, gable, wall, or other roof system flashings installed and any other components specified within this contract to provide a weathertight roof system.

a. Provide inverted "L" Standing Seam shape roofing panels.
b. Panel Protection - Treat exposed cut edges with compatible coating comparable to the factory applied coating system for corrosion protection.
c. Sealants - Provide non-curing, non-skinning butyl based sealants and tapes for concealed locations such as within laps and under eaves. Provide polyurethane and curing butyl elastomeric sealants for exposed locations such as along top edge of surface mounted counter flashings.
d. Factory Color Finish - Provide factory applied, baked coating to the exterior and interior of metal wall panels and metal accessories. Provide exterior finish top coat of 70 percent polyvinylidene fluoride resin with not less than 0.8 mil dry film thickness. Provide exterior primer standard with panel manufacturer with not less than 0.8 mil dry film thickness. Interior finish shall consist of 0.5 mil dry film thick backer coat if permanently concealed from view by construction or the same coating and dry film thickness as the exterior coating if the panel interior side will be exposed. Provide

factory-applied clear 70 percent PVF, 0.8 mil top coat and edge coating on all factory-cut or unfinished panel edges for projects within 300 feet (91 meters) of the ocean or industrial environments.

e. Warranty - Furnish manufacturer's no dollar limit materials and workmanship warranty for the roofing system. The warranty period shall be not less than 20 years from the date of Government acceptance of the work. The warranty shall be issued directly to the Government. The warranty shall provide that if within the warranty period the metal roofing system becomes non-watertight or shows evidence of corrosion, perforation, peeling paint, rupture or excess weathering due to deterioration of the roofing system resulting from defective materials or workmanship the repair or replacement of the defective materials and correction of the defective workmanship shall be the responsibility of the roofing system manufacturer. Repairs that become necessary because of defective materials and workmanship while roofing is under warranty shall be performed within 7 days after notification, unless additional time is approved by the Contracting Officer. Failure to perform repairs within the specified period of time will constitute grounds for having the repairs performed by others and the cost billed to the manufacturer. The Contractor shall also provide a 2 year contractor installation warranty. Coating shall not show a color change greater than 5 NBS color units per ASTM D2244, and not show chalking in excess of 10 per ASTM D4214.

f. Wind Uplift - Metal roofing systems shall be designed and attached to resist wind uplift pressures calculated in accordance with ASCE 7. Uplift resistance shall be validated by applicable Factory Mutual (FM), Underwriters Laboratories (UL), or ASTM uplift resistance test procedures.

B301001 1.4.2 Metal Roof Design Requirements

The design of the SSMR system shall be provided by the Contractor as a complete system. Roof panels, components, transitions, accessories, and assemblies shall be supplied by the same roofing system manufacturer. Provide to the DOR a design analysis signed by a Registered Professional Engineer employed by the SSSMR manufacturer. The design analysis shall include a list of the design loads, and complete calculations for the roofing system and its components; valley designs, gutter/downspout calculations, screw pullout test results, and shall indicate how expected thermal movements are accommodated.

B301001 1.4.3 Accessories

Provide other sheet metal flashings, trim moldings, closure strips, caps and other preformed metal panel accessories, of the same material, thickness and finish as panels, except accessories that are concealed after installation, and are aluminum or zinc-coated steel may be provided unfinished. Provide molded closure strips of closed-cell or solid-cell synthetic rubber, neoprene, or polyvinyl chloride premolded to match configurations of preformed metal panels. All accessories shall be manufactured or approved by the roof panel manufacturer.

B301001 1.4.4 Fasteners

Provide concealed fasteners for attaching panels to structural supports and to adjoining panels as approved and in accordance with printed manufacturer's recommendations.

B301001 1.4.5 Field Quality Control

Install in accordance with the approved manufacturer's erection instructions, shop drawings, and diagrams. Panels shall be in full and firm contact with attachment clips. Where prefinished panels are cut in the field, or where any of the factory applied coverings or coatings are abraded or damaged in handling or installation, they shall, after necessary repairs have been made with material of the same color as the weather coating, be approved before being installed. Seal openings through panels. Correct defects or errors in the materials. Replace materials which cannot be corrected in an approved manner with nondefective materials. Provide molded closure strips where necessary to provide weathertight construction. Use shims as required to ensure attachment clip line is true. Use a spacing gage at each row of panels to ensure that panel width is not stretched or shortened. Provide 30 pound layer of asphalt-saturated felt placed perpendicular to roof slope, covered by a slip sheet. Overlap side and end laps 75 mm 3 inches, offset seams in building paper with seams in felt.

Apply roofing panels with the standing seams parallel to the slope of the roof. Provide roofing panels in longest practical lengths from ridge to eaves (top to eaves on shed roofs), with no transverse joints except at the junction of ventilators, curbs, and similar openings. Install flashing to assure positive water drainage away from roof penetrations. Locate panel end laps such that fasteners do not engage supports or otherwise restrain the longitudinal thermal movement of panels. Attach panels to the structure with concealed clips incorporated into panel seams. Clip attachment shall allow roof to move independently of the structure, except at fixed points as necessary.

B301001 1.5 STRUCTURAL METAL ROOFING SYSTEM

B301001 1.5.1 Structural Standing Seam Metal Roof (SSSMR) System

The SSSMR system covered under this specification shall include the entire roofing system; the standing seam metal roof panels, fasteners, connectors, roof securement components, and assemblies tested and approved in accordance with ASTM E 1592. In addition, the system shall consist of panel finishes, slip sheet, insulation, vapor retarder, all accessories, components, and trim and all connections with roof panels. This includes roof penetration items such as vents, curbs, skylights; interior or exterior gutters and downspouts; eaves, ridge, hip, valley, rake, gable, wall, or other roof system flashings installed and any other components specified within this contract to provide a weathertight roof system.

B301001 1.5.2 Design Requirements

The design of the SSSMR system shall be provided by the Contractor as a complete system, in accordance with ASCE 7. Framing members and connections not indicated on the drawings shall be designed by the Contractor. Roof panels, components, transitions, accessories, and assemblies shall be supplied by the same roofing system manufacturer. Provide to the DOR a design analysis signed by a Registered Professional Engineer employed by the SSSMR manufacturer. The design analysis shall include a list of the design loads, and complete calculations for the support system (when provided by the Contractor), roofing system and its components; valley designs, gutter/downspout calculations, screw pullout test results, and shall indicate how expected thermal movements are accommodated.

a. Dead Loads - The dead load shall be the weight of the SSSMR system. Collateral loads such as sprinklers, mechanical and electrical systems, and ceilings shall not be attached to the panels.
b. Concentrated Loads - The panels and anchor clips shall be capable of supporting a 300 pound concentrated load. The concentrated load shall be applied at the panel mid-span and will be resisted by a single standing seam metal roof panel assumed to be acting as a beam. The un-deformed shape of the panel shall be used to determine the section properties.
c. Uniform Loads - The panels and concealed anchor clips shall be capable of supporting the minimum uniform live load specified in the project program.
d. Roof Snow Loads - The design roof snow loads shall be shown on the contract drawings.
e. Wind Loads - The design wind uplift pressure for the roof system shall be shown on the contract drawings. The design uplift force for each connection assembly shall be that pressure given for the area under consideration, multiplied by the tributary load area of the connection assembly. The safety factor listed below shall be applied to the design force and compared against the ultimate capacity. Prying shall be considered when figuring fastener design loads.

   1) Single fastener in each connection.....3.0

   2) Two or more fasteners in each connection...2.25
f. Framing Members Supporting the SSSMR System - New or revised framing members and their connections shall be designed in accordance with AISC 335, AISI SG-973, or SJI Specs & Tables. Maximum deflection under applied live load, snow, or wind load shall not exceed 1/180 of the span length.
g. Roof Panels Design – Deflections shall be based on panels being continuous across three or more supports. Deflection shall be calculated and measured along the major ribs of the panels.

   1) Steel panels shall be designed in accordance with AISI SG-973.

   2) Aluminum panels shall be designed in accordance with AA ADM. The panel deflection from concentrated loads shall not exceed 1/180 of the span length. The panel deflection under applied live load, snow, or wind load shall not exceed 1/180 times the span length.

B301001 1.5.3 Performance Requirements

a. The SSSMR shall be tested for wind uplift resistance in accordance with ASTM E 1592; SSSMR systems previously tested and approved may be acceptable.

b. SSSMRS Warranty Certificate -- At the completion of the project the Contractor shall furnish signed copies of the 5-year Warranty for Structural Standing Seam Metal Roof (SSSMR) System, a sample copy of which is attached to this section, and the 20-year Manufacturer's Material Warranties, and the manufacturer's 20-year system weather-tightness warranty.

1) Contractor's Weather-tightness Warranty

The SSSMR system shall be warranted by the Contractor on a no penal sum basis for a period of five years against material and workmanship deficiencies; system deterioration caused by exposure to the elements or inadequate resistance to specified service design loads, water leaks, and wind uplift damage. The SSSMR system covered under this warranty shall include the entire roofing system including, but not limited to, the standing seam metal roof panels, fasteners, connectors, roof securement components, and assemblies tested and approved in accordance with ASTM E 1592. In addition, the system shall consist of panel finishes, slip sheet, insulation, vapor retarder, all accessories, components, and trim and all connections with roof panels. This includes roof penetration items such as vents, curbs, and skylights; interior or exterior gutters and downspouts; eaves, ridge, hip, valley, rake, gable, wall, or other roof system flashings installed and any other components specified within this contract to provide a weathertight roof system; and items specified in other sections of these specifications that are part of the SSSMR system. All material and workmanship deficiencies, system deterioration caused by exposure to the elements /or inadequate resistance to specified design loads, water leaks and wind uplift damage shall be repaired as approved by the DOR. See the attached Contractor's required warranty for issue resolution of warrantable defects. This warranty shall warrant and cover the entire cost of repair or replacement, including all material, labor, and related markups. The Contractor shall supplement this warranty with written warranties from the installer and system manufacturer, which shall be submitted along with Contractor's warranty; however, the Contractor shall be ultimately responsible for this warranty

2) Manufacturer's Material Warranties

The Contractor shall furnish, in writing, the following manufacturer's material warranties which cover all SSSMR system components such as roof panels, anchor clips and fasteners, flashing, accessories, and trim, fabricated from coil material:

a) A manufacturer's 20 year material warranty warranting that the aluminum, zinc-coated steel, aluminum-zinc alloy coated steel or aluminum-coated steel as specified herein will not

rupture, structurally fail, fracture, deteriorate, or become perforated under normal design atmospheric conditions and service design loads. Liability under this warranty shall be limited exclusively to the cost of either repairing or replacing nonconforming, ruptured, perforated, or structurally failed coil material.

b) A manufacturer's 20 year exterior material finish warranty on the factory colored finish warranting that the finish, under normal atmospheric conditions at the site, will not crack, peel, or delaminate; chalk in excess of a numerical rating of eight, as determined by ASTM D 4214 test procedures; or change color in excess of five CIE or Hunter Lab color difference (delta E) units in accordance with ASTM D 2244. Liability under this warranty is exclusively limited to refinishing with an air-drying version of the specified finish or replacing the defective coated material.

c) A roofing system manufacturer's 20 year, non-prorated, system weathertightness warranty.

B301001 1.5.4 Roof Panels

Panels shall be steel or aluminum and shall have a factory color or mill finish. Length of sheets shall be sufficient to cover the entire length of any unbroken roof slope for slope lengths that do not exceed 30 feet. When length of run exceeds 30 feet and panel laps are provided, each sheet in the run shall extend over three or more supports. Sheets longer than 100 feet may be furnished if approved by the DOR. Width of sheets shall provide not more than 24 inches of coverage in place. SSSMR system with roofing panels greater than 12 inches in width shall have standing seams rolled during installation by an electrically driven seaming machine.

a. Steel panels

1) Steel panels shall be zinc-coated steel conforming to ASTM A 653/A 653M; aluminum-zinc alloy coated steel conforming to ASTM A 792/A 792M, AZ 55 or 50 coating; or aluminum-coated steel conforming to ASTM A 463/A 463M,Type 2, coating designation T2 65. Zinc, zinc-aluminum alloy or aluminum coated panels shall be 0.023 inch (0.584 mm) thick minimum. Panels shall be within 95 percent of reported tested thickness as noted in wind uplift resistance testing required in paragraph "PERFORMANCE REQUIREMENTS".

2) Prior to shipment, if the panels are not specified with a factory color finish, mill finish panels shall be treated with a passivating chemical to inhibit the formation of oxide corrosion products. Panels that have become wet during shipment and have started to oxidize shall be rejected.

b. Aluminum Panels - Alloy conforming to ASTM B 209, temper as required for the forming operation, minimum 0.032 inch thick.

B301001 1.5.5 Concealed Anchor Clips

Concealed anchor clips shall be the same as the tested roofing system.

B301001 1.5.6 Accessories

Flashing, trim, metal closure strips, caps and similar metal accessories shall be the manufacturer's standard products. Exposed metal accessories shall be finished to match the panels furnished.

B301001 1.5.7 Fasteners

Fasteners for steel roof panels shall be zinc-coated steel, aluminum, corrosion resisting steel, or nylon capped steel, type and size specified below or as otherwise approved for the applicable requirements. Fasteners for aluminum roof panels shall be aluminum or corrosion resisting steel. Fasteners for structural connections shall provide both tensile and shear ultimate strengths of not less than 750 pounds per fastener. Exposed roof fasteners shall be sealed or have sealed washers on the exterior side of the roof to waterproof the fastener penetration. Washer material shall be compatible with the roofing; have a minimum diameter of 3/8 inch for structural connections; and gasketed portion of fasteners or washers shall be neoprene or other equally durable elastomeric material approximately 1/8 inch thick. Exposed fasteners for factory color finished panels shall be factory finished to match the color of the panels.

a. Screws - Screws for attaching anchor devices shall be not less than No. 14
b. Bolts - Bolts shall be not less than 1/4 inch diameter, shouldered or plain shank as required, with locking washers and nuts.
c. Structural Blind Fasteners - Blind screw-type expandable fasteners shall be not less than 1/4 inch diameter. Blind (pop) rivets shall be not less than 9/32 inch minimum diameter.

B301001 1.5.8 Sub-purlins

Cold formed supporting structural members/sub-purlins shall have a minimum thickness of 0.059 inches and a minimum tensile yield strength of 50000 psi. Hot rolled structural members shall have a minimum thickness of 0.25 inches and a minimum tensile yield strength of 36000 psi. Sub-purlins shall be galvanized or shop painted, as required by the project program.

B301001 1.5.9 Factory Color Finish

Panels shall have a factory applied polyvinylidene fluoride finish on the exposed side. The exterior finish shall consist of a baked-on topcoat with an appropriate prime coat. The exterior coating shall be a nominal 2 mil thickness consisting of a topcoat of not less than 0.7 mil dry film thickness and the paint manufacturer's recommended primer of not less than 1.0 mil thickness. The interior color finish shall consist of the same coating and dry film thickness as the exterior. The exterior color finish shall meet the test requirements specified below.

a. Salt Spray test - A sample of the sheets shall withstand a cyclic corrosion test for a minimum of 2016 hours in accordance with ASTM D 5894, including the scribe requirement in the test. Immediately upon removal of the panel from the test, the coating shall receive a rating of not less than 10, no blistering, as determined by ASTM D 714; 10, no rusting, as determined by ASTM D 610; and a rating of 6, over 21/16 to 1/8 inch failure at scribe, as determined by ASTM D 1654.
b. Formability Test - When subjected to testing in accordance with ASTM D 522 Method B, 1/8 inch diameter mandrel, the coating film shall show no evidence of cracking to the naked eye.
c. Humidity Test - When subjected to a humidity cabinet test in accordance with ASTM D 2247 for 1000 hours, a scored panel shall show no signs of blistering, cracking, creepage or corrosion.
d. Impact Resistance - Factory-painted sheet shall withstand direct and reverse impact in accordance with ASTM D 2794 0.500 inch diameter hemispherical head indenter, equal to 1.5 times the metal thickness in mils, expressed in inch-pounds, with no cracking.
e. Abrasion Resistance Test - When subjected to the falling sand test in accordance with ASTM D 968, Method A, the coating system shall withstand a minimum of 2.83 cubic feet (80 liters) of sand before the appearance of the base metal. The term "appearance of base metal" refers to the metallic coating on steel or the aluminum base metal.
f. Specular Gloss - Where considerations for flight line visibility (or other considerations) mandate, finished roof surfaces shall have a specular gloss value of 10 or less at an angle of 85 degrees or 30 plus or minus the value specified in the project program at 60 degrees when measured in accordance with ASTM D 523.
g. Pollution Resistance - Coating shall show no visual effects when covered spot tested in a 10 percent hydrochloric acid solution for 24 hours in accordance with ASTM D 1308.

B301001 1.5.10 Insulation

Thermal resistance of insulation shall be not less than the R-values shown on the contract drawings. R-values shall be determined at a mean temperature of 75 degrees F in accordance with ASTM C 518.

a. Polyisocyanurate Rigid Board Insulation for Use Above a Roof Deck - Polyisocyanurate insulation shall conform to ASTM C 1289, Type II.
b. Blanket Insulation - Blanket insulation shall conform to ASTM C 991.
c. Glass Mat Gypsum Roof Board - Glass mat gypsum roof board for use above the deck or insulation for thermal protection shall have a flame spread - 0, smoke developed - 0, shall be water resistant and have a compressive strength of 500 psi. Glass mat gypsum roof board shall conform to ASTM C 1177/C 1177M.

B301001 1.5.11 Sealant

Sealants shall be elastomeric type containing no oil or asphalt. Exposed sealant shall be colored to match the applicable building color or clear and shall cure to a rubber like consistency. Sealant

placed in the roof panel standing seam ribs shall be provided in accordance with the manufacturer's recommendations.

B301001 1.5.12 Vapor Retarder

a. Vapor Retarders as Integral Facing - Alloy conforming to ASTM B 209, temper as required for the forming operation, minimum 0.032 inch thick. Insulation facing shall have a permeability of 0.02 perm or less when tested in accordance with ASTM E 96.
b. Vapor Retarders Separate from Insulation - Vapor retarder material shall be polyethylene sheeting conforming to ASTM D 4397. A single ply of 10 mil polyethylene sheet; or, at the Contractor's option, a double ply of 6 mil polyethylene sheet shall be used. A fully compatible polyethylene tape with equal or better water vapor control characteristics than the vapor retarder material shall be provided. A cloth industrial duct tape in a utility grade shall also be provided to use as needed to protect the vapor retarder from puncturing.
c. Slip Sheet for Use With Vapor Retarder - Slip sheet for use with vapor retarder shall be a 5 lb. per 100 square feet rosin-sized, unsaturated building paper.

B301001 1.5.13 EPDM Rubber Boots

Flashing devices around pipe penetrations shall be flexible, one-piece devices molded from weather-resistant EPDM rubber. Rubber boot material shall be as recommended by the manufacturer. The boots shall have base rings made of aluminum or corrosion resisting steel that conform to the contours of the roof panel to form a weather-tight seal.

B301001 1.5.14 Prefabricated Curbs and Equipment Support

Prefabricated curbs and equipment supports shall be of structural quality, hot-dipped galvanized or galvanized sheet steel, factory primed and prepared for painting with mitered and welded joints. Integral base plates and water diverter crickets shall be provided. Minimum height of curb shall be 8 inches above finish roof. Curbs shall be constructed to match roof slope and to provide a level top surface for mounting of equipment. Curb flange shall be constructed to match configuration of roof panels. Curb size shall be coordinated, prior to curb fabrication, with the mechanical equipment to be supported. Strength requirements for equipment supports shall be coordinated to include all anticipated loads. Flashings shall not be rigidly attached to underline structure.

B301002 LOW SLOPE ROOF SYSTEMS

B301002 1.1 GENERAL REQUIREMENTS

a. Warranty (Except SSSMRS) - Furnish the roofing system manufacturer's materials and workmanship warranty for the roofing system. The warranty period shall not be less than 20 years from the date the Government acceptance of the work. The warranty shall be issued directly to the Government and shall not be limited in dollar value. The system warranty shall include roofing membrane, insulation,

flashings, accessories and attachments.

b. Wind Uplift - The complete roof covering assembly shall be rated in accordance with FM P7825, capable of withstanding an uplift pressure as determined by ASCE-7, and FM I-49 for perimeter and flashing attachment.

c. Fire Safety - The complete roof covering assembly shall meet ASTM E 108, Class 1A or UL 790, Class A; and be listed as Fire-Classified roof deck construction in the UL RMSD, or Class I roof deck construction in FM P7825. All components of the system shall be UL labeled. Complete roof covering assembly shall:
1) Be Class A or B rated in accordance with ASTM E 108 , FM 4470, or UL 790; and2) Be listed as part of Fire-Classified roof deck construction in UL RMSD, or Class I roof deck construction in FM P7825c.

d. Traffic Pads - Provide on roof system to protect roof from foot traffic. Provide traffic pads from roof access to and around roof mounted mechanical equipment and underneath removable mechanical equipment access panels. Traffic pads shall be of compatible material to roof.

B301002 1.2 BUILT-UP ASPHALT ROOFING (AGGREGATE SURFACED)

This paragraph covers the requirements for aggregate surfaced bituminous built-up roofing made up of glass felt, asphalt bitumen, and aggregate surfaced or modified bitumen cap sheet.

B301002 1.2.1 Materials

a. Asphalt - ASTM D 312, Type II, III or IV

b. Felts - Base Sheet (GB) – ASTM D 4601, Type II without perforations

1) Ply Felt (GA) – ASTM D 2178, Type IV or VI

2) Ventilating Base Sheet VB) – ASTM D 4897

3) Flashing Felt (SBS Modified Base Sheet - MB) per ASTM D 6162 (with combined polyester and glass fiber reinforcing), Type II, Grade G (weighing 4.3(90 lbs./100sf), and a thickness of 130 mils) or Grade S (weighing 58 lbs./100sf and a thickness of 85 mils), ASTM D 6163 (with glass fiber reinforcing), Type II, Grade G (weighing 90 lbs./100sf, and a thickness of 130 mils) or S (weighing 58 lbs./100sf and a thickness of 85 mils), ASTM D 6164 (with polyester reinforcing), Type II, Grade G (weighing 90 lbs./100sf, and a thickness of 130 mils) or S (weighing 70 lbs./100sf and a thickness of 115 mils).

4) SBS Bitumen Cap Sheet (RSS) – ASTM D 6162 (with combined polyester and glass fiber reinforcing), Type II, Grade G (weighing 90 lbs./100sf, and a thickness of 130 mils), ASTM D 6163 (with glass fiber reinforcing), Type II, Grade G (weighing 90 lbs./100sf, and a thickness of 130 mils), ASTM D 6164 (with polyester reinforcing),

c. Primer - ASTM D 41

d. Asphalt Roof Cement - ASTM D 4586, Type II for vertical surfaces and Type I for horizontal surfaces.

e. Aggregate for Surfacing Built-up Roofing - ASTM D 1863

f. Fasteners - Provide metal fasteners of copper, aluminum or stainless steel, compatible with materials to be penetrated. Fasteners shall be of sufficient length to achieve appropriate embedment or penetration into the substrate below.
g. Metal Discs - Flat discs or caps of zinc-coated steel not less than 28 gage and not less than 1-3/8 inches (35 mm) in diameter.
h. Traffic Pads - Preformed reprocessed rubber, compatible with the roof membrane, 1/4-inch (6.35 mm) minimum thickness, weighing not less than 1-1/2 pounds per square foot, to protect roof from foot traffic. Provide traffic pads around roof access and around roof mounted equipment and underneath removable mechanical equipment access panels.

B301002 1.2.2 FIELD QUALITY CONTROL

a. Tests for Surface Dryness - see paragraph B301002 1.2 for Performance Verification and Acceptance Testing requirements.

B301002 1.3 ETHYLENE PROPYLENE DIENE MONOMER (EPDM)

B301002 1.3.1 Materials

a. EPDM Sheet - ASTM D 4637.Â Ethylene Propylene Diene Monomer (EPDM), reinforced, 0.06 inch (1.5 mm) thick for fully adhered application. Seams shall be sealed with seam tape versus liquid adhesive, unless previously approved by DOR.
b. Flashing and Flashing Accessories - Flashing, including perimeter flashing, flashing around roof penetrations, and prefabricated pipe seals, shall be 0.06 inch (1.5 mm) minimum thick uncured EPDM sheet or 0.045 inch (1.1 mm) minimum thick cured EPDM.
c. Fasteners - Provide fasteners warranted by the roofing manufacturer for the EPDM sheet installation.
d. Roof Insulation - Provide rigid board insulation beneath the EPDM sheet as part of the warranted roof system, and compatible with the adhesive used in the installation.

B301002 1.4 MODIFIED BITUMINOUS MEMBRANE ROOFING

This paragraph covers the requirements for modified bituminous membrane sheet roofing, SBS modified for hot mopping or cold applied, with a minimum slope of 1/2 inch per foot. Contractor shall provide a complete modified bitumen roofing system, to include insulation, flashings, felts, primers and adhesives as recommended for the installation either on a nailable (plywood or metal deck) or non-nailable (concrete) substrate, from the materials below.

B301002 1.4.1 Materials

a. Asphalt - ASTM D 312, Type III or IV.
b. Ply Materials -

1) Ventilating Base Sheet (VB) – ASTM D 4897, Type II

2) Base Sheet (GB) – ASTM D 4601, Type II without perforations

3) SBS Modified Base Sheet (MB) – ASTM D 6162 (with combined polyester and glass fiber reinforcing), Type II, Grade S weighing 58 lbs./100sf and a thickness of 85 mils), ASTM D 6163 with glass fiber reinforcing), Type II, Grade S (weighing 58 lbs./100sf and a thickness of 85 mils), ASTM D 6164 (with polyester reinforcing), Type II, Grade S (weighing 70 lbs./100sf and a thickness of 115 mils).

4) SBS Interply Sheet: ASTM D 6162, ASTM D 6164, ASTM D 6163, Type I or II, Grade S, minimum 80 mils (2.0 mm) thick.

5) SBS Bitumen Cap Sheet (RSS) – ASTM D 6162 (with combined polyester and glass fiber reinforcing), Type II, Grade G (weighing 90 lbs./100sf, and a thickness of 130 mils), ASTM D 6163 (with glass fiber reinforcing), Type II, Grade G (weighing 90 lbs./100sf, and a thickness of 130 mils), ASTM D 6164 (with polyester reinforcing), Type II, Grade G (weighing 90 lbs./100sf, and a thickness of 130 mils). Provide polyester reinforced cap sheet on roofs expected to experience high levels of traffic, on roofs with congested equipment, where equipment is expected to receive regular service or high maintenance, and where other service conditions warrant.

c. Mineral Roofing Granules - Factory applied, requiring no further coating.
d. Primer - ASTM D 41
e. Asphalt Roof Cement - ASTM D 4586, Type II for vertical surfaces, Type I for horizontal surfaces.
f. Fasteners - Provide non-corrosive fasteners meeting the requirements of FM A/S4470.
g. Asphalt Adhesive - ASTM D 4479, Type III.
h. Reflective Coating - 100% Acrylic Elastomeric with Energy Star Rating exceeding the requirements of ASTM D-6083. Coating shall be intended for use as a roof topcoat.

B301002 1.5 STRUCTURAL STANDING SEAM METAL ROOFING

See B301001 1.5.1 "Structural Standing Seam Metal Roof System" for SSSMR requirements.

B301003 ROOF INSULATION & FILL

The insulation system shall be coordinated with the mechanical design to suit the energy requirements of the facility.

B301003 1.1 MINERAL FIBER BLANKET INSULATION

This paragraph covers the requirements for mineral fiber blanket thermal insulation in attics and above ceilings.

B301003 1.1.1 Products

a. Blanket Insulation - ASTM C 665, Type I, II, or III, as appropriate for the installation, Class A, membrane-faced surface with a flame spread of 25 or less; and a smoke developed rating of 150 or less when tested in accordance with ASTM E 84.

Indicate insulation R-values on the design drawings.

b. Blocking – Treated wood, metal, un-faced mineral fiber blankets in accordance with ASTM C665, Type I. Blocking around chimneys and other heat producing devices shall be non-combustible and shall meet the requirements of ASTM E 136.

c. Vapor Retarder - 6 mil (minimum) thick polyethylene sheeting conforming to ASTM D 4397, with a water permeance value of 1 perm or less when tested according with ASTM E 96.

B301003 1.2 ROOF AND DECK INSULATION

This paragraph covers the requirements for insulation materials used below the roofing systems.

B301003 1.2.1 Insulation Types

Roof insulation shall have an R-value determined per ASHRAE Standard 90.1 (latest edition) and be one or an assembly of a maximum of three of the following materials and compatible with attachment methods for the specified insulation and roof system:

a. Expanded Perlite Board – ASTM C 728, minimum thickness of 3/4" boards, and 4' by 4' board size.

b. Polyisocyanurate Board – ASTM C 1289, with a minimum compressive strength of 138 kPa (20 psi), unless overlaid with another board with a comparable or greater compressive strength. Use insulation facer as recommended by the roofing material manufacturer. Board size shall be restricted to 4' by 4' when applied in direct contact with concrete deck.

c. Composite Boards – ASTM C 984 (Polyisocyanurate-perlite) or ASTM C 1050 (Polystyrene-wood fiberboard), Type III, Grade 1, Class A, or ASTM C 1289, Type V, oriented strand board or waferboard on one side and fibrous felt or glass fiber mat membrane or aluminum foil on the other.

d. Wood Fiber (high density) – ASTM C 208

B301003 1.2.2 Tapered Roof Insulation

On portions of the roof where the sloping of structure does not allow the minimum slopes, provide a factory tapered roof insulation system to provide positive drainage of roof system, and to include drainage around curbs, penetrations, and projections through the roof plane. For new construction, provide one layer of the tapered roof insulation assembly factory tapered to a slope not less than 1/2" per foot (13 mm per 300 mm). For re-roofing applications where slopes of 1/2" per foot (13 mm per 300 mm) cannot be achieved, provide a minimum of 1/4" per foot (6.35 mm per 300 mm) slope.

B301003 1.2.3 Protection Board

Provide for use as a thermal barrier (underlayment) or protection board for hot-mopped applications.

B301003 1.2.4 Glass Mat Gypsum Roof Board

ASTM C 1177, with a 0 Flame Spread and 0 Smoke Developed when tested in accordance with ASTM E 84.

B301003 1.2.5 Bitumens

a. Asphalt Primer - ASTM D 41
b. Asphalt - ASTM D 312, Type III or IV
c. Asphalt Roof Cement - ASTM D 4586, Type I for horizontal surfaces, Type II for vertical and sloped surfaces. Roof cement shall be compatible with membrane materials.

B301003 1.2.6 Underlayment

a. Asphalt-Saturated Felt Base Sheet for Single Layer Application - ASTM D 4869, Type II or ASTM D 226, Type II (30 pounds).
b. Polymer-Modified Self-Adhering Bitumen Sheet, 40 mil (1.1 mm) minimum thickness. Provide at roof perimeter, valley and roof penetration locations as a minimum.

B301003 1.2.7 Seal at Penetrations

Provide pre-manufactured flashing components for use in single-ply roofing applications. Seal laps and penetrations to prevent moisture vapor penetration. Adhesives, sealants, prefabricated components and spray foam products may be required.

B301003 1.2.8 Fasteners

Fasteners shall be flat, round or hexagonal steel (not less than 1-3/8"(35 mm) diameter) and 28 gage, or plastic plates (not less than 3 inches (75 mm) in diameter).

Fasteners in lightweight cellular concrete decks shall penetrate at least 1 inch (25 mm) but not more than 1-1/2 inches (32 mm) into the deck. Withdrawal resistance from lightweight cellular concrete deck shall be not less than 40 lbs.(18 kg) each, or 120 lbs. (54 kg) each in metal deck.

Fasteners in steel decks shall be hardened fasteners or screws conforming to FM A/S4470 and listed in FM P7825 for Class I roof deck construction.

Fasteners shall be place to withstand an uplift pressure required by the project program in the field of the roof and FM LPDS 1-49 for perimeter component and flashing attachment.

Roofing Nails - Provide corrosion resistant ring shank nails of sufficient length to penetrate a minimum of 1 inch (25 mm) into wood nailers or so as to provide appropriate embedment in substrate below. Fasteners shall conform to FM A/S4470, and be placed to withstand an uplift pressure of 90 psf (4.3 kPa) conforming to FM P7825, and FM 1-49 for perimeter fasteners.

B301003 1.2.9 Wood Nailers

Wood nailers shall be pressure-preservative-treated in accordance with AWPA M2 Standards, permanently marked or branded, and installed flush with the top of the adjacent insulation board. Separate treated wood nailers from roofing metals with underlayment.

B301003 1.2.9.1 Fasteners

Provide stainless steel, double hot-dipped galvanized or other corrosion resistant fasteners recommended by the treatment manufacturer for use with treated wood.

B301004 FLASHINGS & TRIM

B301004 1.1 FLASHING AND SHEET METAL

This paragraph covers the requirements for flashing and sheet metal work including scuppers, splash pans, and sheet metal roofing. Flashing and sheet metal shall be provided in accordance with roof manufacturer’s printed installation instructions and in compliance with NRCA and SMACNA recommendations.

B301004 1.1.1 Materials

Furnish sheet metal items in minimum 8 to 10 foot (2.44 to 3.05 meter) lengths. Sheet metal items include the following: gutters, including hangers; downspouts; counter-flashings; gravel stops and fascias; cap, valley, stepped, base and eave flashings and related accessories.

a. Copper, Sheet and Strip - ASTM B 370, cold-rolled temper.
b. Lead-Coated Copper Sheet - ASTM B 101
c. Lead Sheet - Minimum weight 4 pounds per square foot (.19 kPa).
d. Steel Sheet, Zinc-Coated (Galvanized) - ASTM A 653/ A 653M. Galvanized steel items shall have a baked-on, factory applied finish of polyvinylidene fluoride or an equivalent fluorocarbon coating with a minimum thickness of 0.8 to 1.3 mils.
e. Stainless Steel - ASTM A 167, Type 302 or 304, 2D finish, fully annealed, dead-soft temper.
f. Aluminum Alloy Sheet and Plate - ASTM B 209
g. Pre-Finished Aluminum - Provide trim, gravel stops and fascias of Pre-finished aluminum. Finish shall be baked-on factory applied color coating of polyvinylidene fluoride (PVF2) or other equivalent fluorocarbon coating with a minimum thickness of 0.8 to 1.3 mils.
h. Aluminum alloy, Extruded Bars, Rods, Shapes, and Tubes - ASTM B 221
i. Solder - ASTM B 32
j. Polyvinyl Chloride Reglet - ASTM D 1784, Type II
k. Asphalt Primer - ASTM D 41
l. Fasteners - Fasteners shall be of the same or compatible metal with the item being fastened. Stainless steel fasteners shall be used to fasten dissimilar materials.

B301004 1.1.2 Field Quality Control

Fabrication and installation of sheet metal items shall be as follows:

a. Install work with watertight and hairline joints, without waves, warps, buckles, fastening stresses, or distortion, allowing for expansion and contraction.
b. Make surfaces to receive sheet metal plumb and true, clean, even, smooth, dry and free of defects and projections that could affect the application.
c. Provide sheet metal flashing in angles formed where roof decks abut walls, curbs, ventilators, pipes, or other vertical surfaces and wherever indicated and necessary to make the work watertight.
d. Provide prefabricated inside and outside corners at all sheet metal intersection pieces. Minimum leg length shall be 12 inches (300 mm), maximum length shall be 18 inches (450 mm).
e. Sheet metal shall be fabricated to conform to the contours of surfaces to which applied.
f. All sheet metal cap flashings shall have waterproof membrane underlayment installed behind or below the metal components.
g. Provide conforming sheet metal closures at all flashing termination conditions.
h. Provide fastenings and accessories as required to provide a securely attached, watertight construction. Cleats shall be a minimum of one gage heavier than the component to be attached.
i. Where sheet metal components are to be embedded in the roofing system, prime both sides of all metal flanges prior to installation.

B301005 GUTTERS AND DOWNSPOUTS

Provide gutters and downspouts compatible with roofing material and finish. Concealed (interior) gutters and downspouts are prohibited. The primary and secondary drainage systems shall be sized per applicable Plumbing and Building Codes. Finish shall be baked-on factory applied color coating of polyvinylidene fluoride (PVF2) or other equivalent fluorocarbon coating with a minimum thickness of 0.8 to 1.3 mils.

B301006 ROOF OPENINGS AND SUPPORTS

B301006 1.1 GENERAL REQUIREMENTS

Provide flashings for roof openings and supports as recommended by the NRCA and as specified below:

When existing pitch pans cannot be avoided and must be utilized, insure pitch pan is a preformed pan with minimum 4-inch (100 mm) height and 2-inch (50 mm) flange with 2-inch (50 mm) clearance on all sides of the penetration. Fill bottom 1/3 with non-shrink grout. Fill remainder with pourable elastomeric sealer sloped to drain. For round penetrations, provide a metal umbrella cap clamped to the penetration.

Assure all penetration flashings extend minimum 8 inches (200 mm) above the finished roof surface. Use round shapes to construct equipment supports. Equipment supports should be raised on a continuous curb a minimum of 14 inches (350 mm), but not less than as required by the NRCA.

B301006 1.2 ROOF HATCHES

Construct using NRCA approved techniques and details. Provide roof hatch where required by OSHA, or as access to roof when roof mounted equipment is used or other routine roof maintenance is required.

B301006 1.2.1 Construction

Provide insulated roof hatches of 14 gage galvanized steel with 22 gage galvanized steel liner or 18 gage aluminum liner, and have integral curb, flange and flashings for securing to roof deck. Hinge shall be heavy-duty zinc plated steel with non-removable pins. Latching mechanism shall be zinc-coated steel slam latch with inside and outside levers. Springs shall be greased compression springs in telescopic tubes. Provide interior locking of roof hatch. Provide a safety rail or ladder extension. Size roof hatch to allow access of routine maintenance equipment, but not less than 2'-6" x 3'-0" (750 mm x 900 mm). Hatch and access ladders shall conform to OSHA and other applicable safety standards.

B301006 1.3 GLAZED ROOF OPENINGS

This paragraph covers the requirements for skylights manufactured from glass-fiber or thermoplastic carbonate.

Skylights and other glazed roof openings shall be used only to supplement interior lighting levels (generally in steep slope or vertical applications), and otherwise, are discouraged from use. Proper detailing is critical, and shall be scrutinized closely to minimize the likelihood of future leaks at these locations.

B301006 1.3.1 Warranty

The contractor shall furnish to the Government the manufacturer's complete warranty for materials, workmanship and installation. The warranty is for 10 years from the time of project completion. The warranty shall guarantee, but shall not be limited to, the following:

a. Light transmission and color of the panels shall not change after exposure to heat of 300 degrees F (149 degrees C) for 25 minutes.
b. There is no delamination of the panel affecting appearance, performance, weatherability or structural integrity of the panels or the completed system.
c. There is no fiberbloom on the panel face.
d. Change in light transmission of no more than 6% per ASTM D 1003, and in color (yellowing index) no more than 10 points in comparison to the original specified value over a 10 year period.

B301006 1.3.2 Skylight Panels

Skylight panels shall be constructed of glass-fiber reinforced polyester or extruded cellular thermoplastic polycarbonate materials. Glass-fiber reinforced panels shall conform to ASTM D

3841 and to the requirements of AAMA 1600/I.S.7.

a. Non-Combustible Grid Core - The aluminum I-beams shall be 6063-T6 with provisions for mechanical interlocking of muntin-mullion and perimeter to provide full bonding surface to contact the face material. Panels shall withstand 1200 degrees F (650 degrees C) for a minimum of one hour without collapse or exterior flaming.
b. Adhesive - The laminate adhesive shall meet the following requirements:1) Tensile strength of 750 psi-in. in accordance with ASTM C 297.2) Shear strength shall meet or exceed the following per ASTM D 1002:a) 540 psi (3723 kPa) at 50% relative humidity and 73 degrees F (23 degrees C).b) 800 psi (5516 kPa) under accelerated aging per ASTM D 1037 at room temperature.c) 250 psi (1724 kPa) under accelerated aging per ASTM D 1037 at 182 degrees F (83 degrees C).d) 1400 psi (9653 kPa) after 500 hour Oxygen Bomb per ASTM D 572.e) 100 psi (690 kPa) at 182 degrees F (83 degrees C).
c. Panel Construction - Panels shall consist of fiberglass faces laminated to an aluminum I-beam grid core and shall not deflect more than 1.9 inches (48 mm) at 30 psf (1.44 kPa) in 10 feet (3.048 meters) per ASTM E 72, without a supporting frame.

B301006 1.3.3 Thermoplastic Polycarbonate Panels

The glazing panels shall meet the following requirements:

a. The interior flame spread classification shall be Class I in accordance with ASTM E 84, with a smoke developed rating no greater than 70 in accordance with ASTM D 2843.
b. The exterior and interior faces shall be an approved light transmitting panel with a CC1 fire rating classification in accordance with ASTM D 635.
c. Self-ignition shall be greater than 1058 degrees F (570 degrees C) in accordance with ASTM D 1929.
d. Fire rated roof assembly translucent panels shall be successfully evaluated for fire from exterior exposure per ASTM E 108 to meet Class 'A' rating, and be listed by an independent recognized listing laboratory.

B301006 1.4 GUARDS

Provide rails or guards as required by the OSHA, the International Building Code or other applicable safety standards.

B301090 OTHER ROOFING

B301090 1.1 LIGHTNING PROTECTION

Lightning protection component penetrations and attachments shall be sealed and flashed and anchored in a permanent manner and in a manner to avoid the degradation of the watertight integrity of the roof system. Do not cut or otherwise disturb the roof membrane. Mastic seals in the plane of the roof are unacceptable. Anchor plates set in mastic shall be set on roof surface cleaned of aggregate and loose material prior to mastic application.

B301090 1.2 ROOF DRAINS (EXISTING)

Where existing roof drains are to be reused in roof replacement construction, the contractor shall provide new, compatible flashing materials, a new drain clamping ring and new bolts for anchorage. Reuse of existing clamping ring and bolts is unacceptable.

-- End of Section --

FORMS

ROOFING SYSTEM COMPONENTS

1. Contract Number: _____

2. Building Number and Location: _____

3. NAVFAC Specification Number: _____

4. Deck Type: _____

5. Slope of Deck: _____

6. Insulation Type and Thickness:_____

7. Insulation Manufacturer: _____

8. Vapor Retarder (_____) Yes (_____) No

9. Vapor Retarder Type: _____

10. Roofing Description: _____

    Manufacturer (Name, address, and phone no.): _____

    _____

    Type: _____

    Method of attachment: _____

11. Statement of Compliance or Exception: _____

    _____

    _____

12. Date Roof Completed: _____

13. Warranty Period: _____

14. Roofing Contractor (Name and Address):

    _____

    _____

    _____

15. Prime Contractor (Name and Address):

    _____

_____

_____

Contractor's Signature _____ Date: _____

Inspector's Signature _____ Date: _____

Form page 1

CONTRACTOR'S FIVE (5) YEAR NO PENAL SUM WARRANTY FOR STRUCTURAL STANDING SEAM METAL ROOF (SSSMR) SYSTEM

FACILITY DESCRIPTION_____

BUILDING NUMBER:_____

CONTRACT NUMBER:_____

CONTRACTOR

CONTRACTOR:_____

ADDRESS:_____

POINT OF CONTACT:_____

TELEPHONE NUMBER:_____

OWNER

OWNER:_____

ADDRESS:_____

POINT OF CONTACT:_____

TELEPHONE NUMBER:_____

CONSTRUCTION AGENT

CONSTRUCTION AGENT:_____

ADDRESS:_____

POINT OF CONTACT:_____

TELEPHONE NUMBER:_____

Warranty page 1

CONTRACTOR'S FIVE (5) YEAR NO PENAL SUM WARRANTY FOR STRUCTURAL STANDING SEAM METAL ROOF (SSSMR) SYSTEM (continued)

THE SSSMR SYSTEM INSTALLED ON THE ABOVE NAMED BUILDING IS WARRANTED BY _____ FOR A PERIOD OF FIVE (5) YEARS AGAINST WORKMANSHIP AND MATERIAL DEFICIENCES, WIND DAMAGE, STRUCTURAL FAILURE, AND LEAKAGE. THE SSSMR SYSTEM COVERED UNDER THIS WARRANTY SHALL INCLUDE, BUT SHALL NOT BE LIMITED TO, THE FOLLOWING: THE ENTIRE ROOFING SYSTEM, MANUFACTURER SUPPLIED FRAMING AND STRUCTURAL MEMBERS, METAL ROOF PANELS, FASTENERS, CONNECTORS, ROOF SECUREMENT COMPONENTS, AND ASSEMBLIES TESTED AND APPROVED IN ACCORDANCE WITH ASTM E 1592. IN ADDITION, THE SYSTEM PANEL FINISHES, SLIP SHEET, INSULATION, VAPOR RETARDER, ALL ACCESSORIES, COMPONENTS, AND TRIM AND ALL CONNECTIONS ARE INCLUDED. THIS INCLUDES ROOF PENETRATION ITEMS SUCH AS VENTS, CURBS, SKYLIGHTS; INTERIOR OR EXTERIOR GUTTERS AND DOWNSPOUTS; EAVES, RIDGE, HIP, VALLEY, RAKE, GABLE, WALL, OR OTHER ROOF SYSTEM FLASHINGS INSTALLED AND ANY OTHER COMPONENTS SPECIFIED WITHIN THIS CONTRACT TO PROVIDE A WEATHERTIGHT ROOF SYSTEM; AND ITEMS SPECIFIED IN OTHER SECTIONS OF THE SPECIFICATIONS THAT ARE PART OF THE SSSMR SYSTEM.

ALL MATERIAL DEFICIENCIES, WIND DAMAGE, STRUCTURAL FAILURE, AND LEAKAGE ASSOCIATED WITH THE SSSMR SYSTEM COVERED UNDER THIS WARRANTY SHALL BE REPAIRED AS APPROVED BY THE CONTRACTING OFFICER. THIS WARRANTY SHALL COVER THE ENTIRE COST OF REPAIR OR REPLACEMENT, INCLUDING ALL MATERIAL, LABOR, AND RELATED MARKUPS. THE ABOVE REFERENCED WARRANTY COMMENCED ON THE DATE OF FINAL ACCEPTANCE ON _____ AND WILL REMAIN IN EFFECT FOR STATED DURATION FROM THIS DATE.

SIGNED, DATED, AND NOTARIZED (BY COMPANY PRESIDENT)

_____

(Company President) (Date)

Warranty page 2

CONTRACTOR'S FIVE (5) YEAR NO PENAL SUM WARRANTY FOR STRUCTURAL STANDING SEAM METAL ROOF (SSSMR) SYSTEM (continued)

THE CONTRACTOR SHALL SUPPLEMENT THIS WARRANTY WITH WRITTEN WARRANTIES FROM THE MANUFACTURER AND INSTALLER OF THE SSSMR SYSTEM, WHICH SHALL BE SUBMITTED ALONG WITH THE CONTRACTOR'S WARRANTY. HOWEVER, THE CONTRACTOR WILL BE ULTIMATELY RESPONSIBLE FOR THIS WARRANTY AS OUTLINED IN THE SPECIFICATIONS AND AS INDICATED IN THIS WARRANTY EXAMPLE.

EXCLUSIONS FROM COVERAGE

1. NATURAL DISASTERS, ACTS OF GOD (LIGHTNING, FIRE, EXPLOSIONS, SUSTAINED WIND FORCES IN EXCESS OF THE DESIGN CRITERIA, EARTHQUAKES, AND HAIL).

2. ACTS OF NEGLIGENCE OR ABUSE OR MISUSE BY GOVERNMENT OR OTHER PERSONNEL, INCLUDING ACCIDENTS, VANDALISM, CIVIL DISOBEDIENCE, WAR, OR DAMAGE CAUSED BY FALLING OBJECTS.

3. DAMAGE BY STRUCTURAL FAILURE, SETTLEMENT, MOVEMENT, DISTORTION, WARPAGE, OR DISPLACEMENT OF THE BUILDING STRUCTURE OR ALTERATIONS MADE TO THE BUILDING.

4. CORROSION CAUSED BY EXPOSURE TO CORROSIVE CHEMICALS, ASH OR FUMES GENERATED OR RELEASED INSIDE OR OUTSIDE THE BUILDING FROM CHEMICAL PLANTS, FOUNDRIES, PLATING WORKS, KILNS, FERTILIZER FACTORIES, PAPER PLANTS, AND THE LIKE.

5. FAILURE OF ANY PART OF THE SSSMR SYSTEM DUE TO ACTIONS BY THE OWNER TO INHIBIT FREE DRAINAGE OF WATER FROM THE ROOF AND GUTTERS AND DOWNSPOUTS OR ALLOW PONDING WATER TO COLLECT ON THE ROOF SURFACE. CONTRACTOR'S DESIGN SHALL INSURE FREE DRAINAGE FROM THE ROOF AND NOT ALLOW PONDING WATER.

6. THIS WARRANTY APPLIES TO THE SSSMR SYSTEM. IT DOES NOT INCLUDE ANY CONSEQUENTIAL DAMAGE TO THE BUILDING INTERIOR OR CONTENTS THAT IS COVERED BY THE WARRANTY OF CONSTRUCTION CLAUSE INCLUDED IN THIS CONTRACT.

7. THIS WARRANTY CANNOT BE TRANSFERRED TO ANOTHER OWNER WITHOUT WRITTEN CONSENT OF THE CONTRACTOR; AND THIS WARRANTY AND THE CONTRACT PROVISIONS WILL TAKE PRECEDENCE OVER ANY CONFLICTS WITH STATE STATUTES.

**

Warranty page 3

CONTRACTOR'S FIVE (5) YEAR NO PENAL SUM WARRANTY FOR STRUCTURAL STANDING SEAM METAL ROOF (SSSMR) SYSTEM (continued)

**REPORTS OF LEAKS AND SSSMR SYSTEM DEFICIENCIES SHALL BE RESPONDED TO WITHIN 48 HOURS OF RECEIPT OF NOTICE, BY TELEPHONE OR IN WRITING, FROM EITHER THE OWNER OR CONTRACTING OFFICER. EMERGENCY REPAIRS TO PREVENT FURTHER ROOF LEAKS SHALL BE INITIATED IMMEDIATELY; A WRITTEN PLAN SHALL BE SUBMITTED FOR APPROVAL TO REPAIR OR REPLACE THIS SSSMR SYSTEM WITHIN SEVEN (7) CALENDAR DAYS. ACTUAL WORK FOR PERMANENT REPAIRS OR REPLACEMENT SHALL BE STARTED WITHIN 30 DAYS AFTER RECEIPT OF NOTICE, AND COMPLETED WITHIN A REASONABLE TIME FRAME. IF THE CONTRACTOR FAILS TO ADEQUATELY RESPOND TO THE WARRANTY PROVISIONS, AS STATED IN THE CONTRACT AND AS CONTAINED HEREIN, THE CONTRACTING OFFICER MAY HAVE THE SSSMR SYSTEM REPAIRED OR REPLACED BY OTHERS AND CHARGE THE COST TO THE CONTRACTOR.

IN THE EVENT THE CONTRACTOR DISPUTES THE EXISTENCE OF A WARRANTABLE DEFECT, THE CONTRACTOR MAY CHALLENGE THE OWNER'S DEMAND FOR REPAIRS OR REPLACEMENT DIRECTED BY THE OWNER OR CONTRACTING OFFICER EITHER BY REQUESTING A CONTRACTING OFFICER'S DECISION UNDER THE CONTRACT DISPUTES ACT, OR BY REQUESTING THAT AN ARBITRATOR RESOLVE THE ISSUE. THE REQUEST FOR AN ARBITRATOR MUST BE MADE WITHIN 48 HOURS OF BEING NOTIFIED OF THE DISPUTED DEFECTS. UPON BEING INVOKED, THE PARTIES SHALL, WITHIN TEN (10) DAYS, JOINTLY REQUEST A LIST OF FIVE (5) ARBITRATORS FROM THE FEDERAL MEDIATION AND CONCILIATION SERVICE. THE PARTIES SHALL CONFER WITHIN TEN (10) DAYS AFTER RECEIPT OF THE LIST TO SEEK AGREEMENT ON AN ARBITRATOR. IF THE PARTIES CANNOT AGREE ON AN ARBITRATOR, THE CONTRACTING OFFICER AND THE PRESIDENT OF THE CONTRACTOR'S COMPANY WILL STRIKE ONE (1) NAME FROM THE LIST ALTERNATIVELY UNTIL ONE (1) NAME REMAINS. THE REMAINING PERSON SHALL BE THE DULY SELECTED ARBITRATOR. THE COSTS OF THE ARBITRATION, INCLUDING THE ARBITRATOR'S FEE AND EXPENSES, COURT REPORTER, COURTROOM OR SITE SELECTED, ETC., SHALL BE BORNE EQUALLY BETWEEN THE PARTIES. EITHER PARTY DESIRING A COPY OF THE TRANSCRIPT SHALL PAY FOR THE TRANSCRIPT. A HEARING WILL BE HELD AS SOON AS THE PARTIES CAN MUTUALLY AGREE. A WRITTEN ARBITRATOR'S DECISION WILL BE REQUESTED NOT LATER THAN 30 DAYS FOLLOWING THE HEARING. THE DECISION OF THE ARBITRATOR WILL NOT BE BINDING; HOWEVER, IT WILL BE ADMISSIBLE IN ANY SUBSEQUENT APPEAL UNDER THE CONTRACT DISPUTES ACT.

A FRAMED COPY OF THIS WARRANTY SHALL BE POSTED IN THE MECHANICAL ROOM OR OTHER APPROVED LOCATION DURING THE ENTIRE WARRANTY PERIOD.

Warranty page 4

THIS PAGE HAS BEEN INTENTIONALLY LEFT BLANK

SECTION C10

INTERIOR CONSTRUCTION
11/10

C10 GENERAL

RFP Part 3 including the Engineering System Requirements (ESR) provide project specific requirements. The RFP Part 4, Performance Technical Sections (PTS) provide generalized technical requirements that apply to multiple facility types and include more requirements than are applicable to any one project. Therefore, only the RFP Part 4 requirements that apply to the project and further define the RFP Part 3 project specific requirements are required.

C10 1.1 DESIGN GUIDANCE

Provide the design and installation in accordance with the following references. This Performance Technical Specification (PTS) adds clarification to the fundamental requirements contained in the following Government Standards. The general requirements of this PTS section are located in PTS Section Z10, *General Performance Technical Specification*.

Industry standards, codes, and Government standards that are referenced in the section text that are not found in the Unified Master Reference List (UMRL) in the Construction Criteria Base (CCB) at the Whole Building Design Guide Website , are listed below for basic designation identification. Comply with the required and advisory portions of the current edition of the standard at the time of contract award.

C10 1.1.1 Industry Standards and Codes

Sealant, Waterproofing & Restoration Institute

C10 1.1.2 Government Standards

UNIFIED FACILITIES CRITERIA (UFC)

UFC 1-200-01	General Building Requirements(A reference in this PTS section to UFC 1-200-01 requires compliance with the Tri-Service Core UFCs that are listed in UFGS Section 01 33 10.05 20, which includes the following significant UFC(s):UFC 3-101-01, ArchitectureUFC 3-120-10, Interior Design)

C10 1.2 PERFORMANCE VERIFICATION AND ACCEPTANCE TESTING

Verification of satisfactory interior construction assemblies' performance shall be via Performance Verification Testing, as detailed in this section of the RFP. Provide special tests and special inspections in accordance with UFGS Section 01 45 00.05 20, *Design and Construction Quality Control*. The Contractor shall pay the cost of all testing.

C10 1.2.1 Slump and Compressive Strength Tests for Grout

Slump between 8 and 11 inches (200 and 275 mm). Provide minimum grout strength of 2000 PSI in 28 days, as tested per ASTM C 1019.

C10 1.2.2 Door Closure Field Test for Demountable Partitions, Retractable Partitions, Operable Panels, and Accordion Partitions

Perform a flashlight test of all joints in partitions and partition to wall, floor, and ceiling. No light from a flashlight shall be visible from the opposite side of the partition. Adjust partition at locations where light is visible, and re-test.

C10 1.2.3 Field Test for Sprayed Fire-Resistive Materials

A qualified testing and inspection agency shall be engaged to prepare testing and adhesion reports to test for bond strength. Bond strength shall be tested per ASTM E 736 and be found to meet the requirements in UL's *Fire Resistance Directory*for coating materials.

C10 1.3 DESIGN SUBMITTALS

Design submittals shall be in accordance with Z10, *General Performance Technical Specifications*, UFGS section 01 33 10.05 20, *Design Submittal Procedures*, UFC 1-300-09N, *Design Procedures*, UFC 3-101-01, *Architecture*, and UFC 3-301-01, *Structural Engineering*.

C10 1.4 CONSTRUCTION SUBMITTALS

Submit construction submittals in accordance with PTS Section Z10, *General Performance Technical Specifications*. In addition to the Z10 requirements, the Designer of Record (DOR) shall approve the following submittals as a minimum:

Doors, door hardware, windows and glazing, cabinets and countertops, casework, and fireproofing/firestopping.

All structural elements necessary for construction

C1010 PARTITIONS

For general use, metal studs and standard grade GWB, CMU with prime filler coat, or CMU/cast-in-place concrete with GWB or skim coat plaster are acceptable unless shown otherwise in the Project Program. Reinforce points where doorknobs can strike a wall and anchorage points for wall mounted equipment.

Provide control joints and installation techniques as recommended by the manufacturer. See PTS Section C30, *Interior Finishes*, for additional information.

Provide painted GWB with access panels at surfaces furred for HVAC, plumbing and other utility services and controls behind wall surfaces.

Acceptable systems where "IMPACT RESISTANCE" (areas subject to physical abuse or wear) is designated in the project program requirements for impact resistance systems include:

a. CMU/cast-in-place concrete with or without plaster or furred impact resistant GWB or surface applied impact resistant textured acrylic architectural coating system.
b. GWB/metal stud system reinforced for impact resistance with a double layer of gypsum board using at least one layer of impact resistant gypsum board to resist denting and puncturing on the impact surface. If wall is subjected to impact on both sides, both sides of the stud require a double layer of gypsum board. Structural, mechanical, and acoustical design requirements effect the metal stud/gypsum support configuration.

C101001 FIXED PARTITIONS

Provide fixed partitions, except where demountable or retractable partitions are specifically required by the "Room Requirements", to include wood or metal studs, GWB, plaster, masonry and cast-in-place concrete walls. Sound-rated partition assemblies shall have a minimum Sound Transmission Coefficient (STC) as required by the project program. Construct sound-rated bulkheads above partition assemblies for continuity to the deck above.

C101001 1.1 CAST-IN-PLACE INTERIOR CONCRETE WALLS

Accomplish work in accordance with UFC 1-200-01, ACI 117 and 301/301M. Concrete Mix Design shall be suitable for the job conditions.

C101001 1.2 MASONRY PARTITIONS

Accomplish work in accordance with ACI 530.1/ASCE 6/TMS 602 and associated ASTM Standards for concrete masonry wall construction.

C101001 1.2.1 Testing

Masonry strength shall be determined in accordance with ACI 530.1. Where fire-rated assemblies are indicated, provide concrete masonry units that have been tested in conformance with ASTM E 119. Provide certificate of compliance to the Designer of Record (DOR) that the materials and assemblies meet the fire ratings indicated on the drawings.

C101001 1.2.2 Masonry Units Types

C101001 1.2.2.1 Concrete Masonry Units

Units of modular dimensions and air, water or steam cured. Surfaces of units to be plastered or stuccoed shall be sufficiently rough to provide bond and exposed surfaces of units shall be smooth and of uniform texture.

a. Hollow Load-Bearing Units: ASTM C 90, Type I or II, made of lightweight or normal weight aggregate.
b. Hollow Non-Load-Bearing Units: ASTM C 129, Type I or II, made with lightweight or normal weight aggregate.
c. Special Shapes: Provide special shapes as necessary to complete the work.
d. Fire-Rated CMU: Products shall be tested and approved by United Laboratories (UL) according to testing methods

described in ASTM E 119, and listed as 2, 3 or 4-hour fire-rated.

C101001 1.2.2.2 Glazed Structural Clay Tile

Provide glazed tile of Grade S, Type I, conforming to ASTM C 126. Tile for fire-rated walls shall have the percent of solid required for that rating.

C101001 1.2.2.3 Pre-Faced Concrete Masonry Units

Provide pre-faced concrete masonry units conforming to ASTM C 744, load-bearing or non-load-bearing, lightweight, Grade N, Type I.

C101001 1.2.2.4 Glass Masonry Units

Provide glass block units made of clear colorless glass with polyvinyl butyl edge coating. Provide all aggregates, horizontal and vertical joint reinforcing, panel anchors, and expansion strip as recommended by the glass block manufacturer.

C101001 1.2.3 Masonry Partition Materials

a. Mortar - Provide ASTM C 270, Type N or S for non-shear-wall interior masonry. For Glass Block use Type S, White Portland cement.
b. Portland Cement - ASTM C 150, Type I, II, or III.
c. Masonry Cement - ASTM C 91, Type N, S, or M.
d. Sand - ASTM C144.
e. Grout - ASTM C 476, Fine aggregate for grouting cells / spaces 3" (75 mm) or less, or coarse aggregate for grouting cells / spaces greater than 3" (75 mm). Slump between 8 and 11 inches (200 and 275 mm). Provide minimum grout strength of 2000 PSI in 28 days, as tested per ASTM C 1019.

C101001 1.2.4 Masonry Accessories

a. Horizontal Joint Reinforcement – Fabricate from cold drawn steel wire, ASTM A 82. Wire shall be hot-dipped galvanized after fabrication in accordance with ASTM A 153/ A 153M, Class B-2, 1.5 ounces of zinc per square foot (42.52 g / 0.0929 sq. meter).
b. Anchors and Wall Ties – Provide of stainless steel, ASTM A 167, Type 304, or zinc-coated steel.
c. Reinforcing Bars – ASTM A 615 / A 615M.

C101001 1.3 COLD-FORMED METAL FRAMING

Cold-Formed Metal Framing shall be designed and constructed in accordance with the provisions of UFC 1-200-01 and the International Building Code.

C101001 1.3.1 Studs

Galvanized steel, ASTM A 653 / A 653M, SS Grade 50, G60

C101001 1.3.2 Framing Accessories

Fabricate steel-framing accessories of the same material and finish used for framing members, with minimum yield strength of 33,000 psi (230 Mpa). Accessories include, but are not limited to, the following: bracing, bridging, blocking, web stiffeners, end and foundation clips, gusset plates, stud kickers, knee braces, girts, joist hangers, reinforcing and backer plates.

Provide permanent metal-to-metal contact separation from stud to electrical conduits, plumbing pipes, and other internal wall system components, such as electrical wires.

C101001 1.4 METAL SUPPORT ASSEMBLIES

Provide steel materials for metal support systems with galvanized coating per ASTM A 653/ A 653M, G60; aluminum coating ASTM A 463/ A 463M, T1-25; or a 55% aluminum-zinc coating ASTM A 792.

C101001 1.4.1 Suspended and Furred Ceiling Systems, and Wall Furring

ASTM C 841(for lath); ASTM C 645 (for GWB).

C101001 1.4.2 Non-load-Bearing Wall Framing / Furring

ML/SFA MLF (for lath); ASTM C 645, but not thinner than 0.0179 inch (0.4547 mm) thickness. Provide 0.0329 inch (0.8357 mm) minimum thickness for supporting wall hung items such as cabinetwork, equipment and fixtures and for GWB.

C101001 1.5 ROUGH CARPENTRY

Unless otherwise noted, all rough carpentry shall be concealed from view. All framing and board lumber shall be graded and marked by a recognized association or independent inspection agency. Certification of grade is acceptable in lieu of grade markings. Framing lumber such as studs, plates, caps, bucks and nailers shall be of the minimum grade for the application in accordance with the grading rules for the local species of framing and board lumber.

C101001 1.5.1 Moisture Content

Air-dry or kiln dry lumber as follows:

a. Framing lumber and boards – 19% maximum
b. Timbers 5" and thicker – 25% maximum

C101001 1.5.2 Fire-retardant Treatment

Comply with AWPA C20 or AWPA C27.

C101001 1.5.3 Preservative Treated Lumber

Preservative treated lumber shall be in accordance with AWPA Standards.

C101001 1.5.4 Structural Lumber

Provide of species and grade as listed in AF&PA 101 that have the following minimum allowable unit stresses: 1050 Fb, 700 Fc with 1,200,000 E (for engineered uses) but not less than required by structural calculations.

C101001 1.5.5 Plywood, Structural

PS-1, PS-2.

a. Plywood (Concealed) - C-D grade, exposure 1 durability classification, span rating of 24/16 or greater.
b. Plywood Shear Walls - Structural I, C-C or C-D grade, and a minimum thickness of 1/2 inch (12.5 mm), but not less than required by structural calculations.

C101002 DEMOUNTABLE PARTITIONS

This paragraph covers unitized/component based demountable walls/partitions and associated work, including tracks and anchoring systems. Requirements and configurations shall be in accordance with the project requirements. Majority of the components and hardware shall be provided by a single manufacturer and on the manufacturer's current GSA pricelist.

C101002 1.1 PERFORMANCE REQUIREMENTS

C101002 1.1.1 Product Construction

Panels and framework shall be unitized/component based(not stick built), and non-progressive. All panel components including frames, glass frames, door frames, base trim, ceiling trim, and tracks shall be cold-formed steel or extruded aluminum and powder coated. Panels shall be a minimum of 2-1/4" thick, and shall have panels available between 6"-48" with 1/16" minimum with nominal widths and filler panels available. Panels shall have no more than a Â¼" reveal between adjacent panels or the use of connectors in the same finish of the skin. Panels shall have integrated leveling devices and have a minimum of Â½" adjustability at the ceiling and 1" of adjustability at the floor. Walls shall be capable of hanging any manufacturer's systems furniture. Walls must meet seismic requirements when applicable.

C101002 1.1.2 Surface Skin

Wall surfaces to be available including fabric, wood veneer, plastic laminate, painted MDF, glass, plexi-glass, resin, dry erase board, metal, and custom paint, with the option of being be segmented or monolithic. Surfaces all be interchangeable with the ability to apply a new skin/finish.

C101002 1.1.3 Door Assemblies

Doors shall be a minimum of 1-3/4" thick and available as a hinged or pivot door with the option of being a single or double doors, and with or without glass. All hardware to be included. Door and Frame assemblies shall be aligned and fitted, and securely anchored to partitions.

C101002 1.1.4 Glazing

Comply with the Federal Safety Standard for Architectural Glazing Materials and shall be factory installed. Options shall include clear, frosted, patterned, custom etched, back painted, and available for use on panels and doors.

C101002 1.1.5 Burning Characteristics and Fire Endurance

The system shall have a Class 'A' (under 25) flame spread rating in conformance with ASTM E 84.

Provide fabric and lining with a flame spread rating of 25 or less, fuel contribution rating of 15 or less, and a smoke generation of 50 or less when tested in accordance with ASTM E 84.

C101002 1.1.6 Acoustical Performance

Sound-rated partition assemblies shall have a minimum Sound Transmission Coefficient (STC) as required by the RFP Part 3, Project Program. STC ratings must be laboratory test and documentation must be provided.

C101002 1.1.7 Structural Performance

Panel deflection shall not exceed 1/120th of the vertical span when tested in accordance with ASTM E 72.

C101002 1.1.8 Electrical Requirements

Modular power options shall be available within solid wall cavities, base areas and frames and shall have open accessibility before, during and after installation. Power shall be accessible to power and data cabling, disconnection, and reconnection to accommodate wall disassembly and relocation. Power Supply to consist of an 8-wire system with 3,3,2 circuits and 2+1 grounding or a 10-wire system with 4-4-2 circuits and 2+2 grounding with isolated grounding available. UL Listed manufactured wiring system rated for 20amp 120V/208V or 120V/240V. The components shall have a permanent label listing manufacturer, catalog number, CSA/UL listing. Component's wiring shall not be "de populated" to impede future configurations. Electrical system must be capable of working with other manufacturer's products. Light switch and outlet devices shall be provided by the mfr and be fully pre-wired and pre-installed at the factory. Cables shall have a J-Box option for hardwiring any manufacturer's furniture power feed cable. Receptacles to indicate which circuit within the modular wiring zone to which they are connected. Receptacles may/may-not be pre-dedicated but must be able to easily be switched to suit the user circuit requirements. Additional power and/or data

modules & hardwired outlets (fire, safety, thermostats etc) shall have the option of being installed on any panel.

C101002 1.1.9 Sustainability

The system is desired to be GreenGuard certified, Cradle to Cradle Certified, SCS, or SMaRT certified. Finish coats must use low VOC Adhesives and materials. FSC certified wood must be available.

C101002 1.1.10 Installation

To include all materials, labor, equipment, and additional seismic bracing as necessary, needed for a turn-key installation. Existing Walls, ceilings, ceiling suspension systems, or floors shall not be altered or damaged to accomodate function of partitions. Manufacturer or manufacturer's representative must take field measurements prior to fabrication.

C101002 1.1.11 Field Test

Perform field tests as required in Paragraph C30 1.2 PERFORMANCE VERIFICATION AND FIELD TESTING.

C101002 1.2 WIRE MESH PARTITIONS

Wire mesh partitions shall be complete with all items necessary for a useable, and rigid installation. Provide pre-manufactured assemblies with pre-bolted connections. Wire mesh partition doors require a means of locking. Key and cylinder locks are required for partition doors used daily.

C101002 1.2.1 Materials

a. Steel shapes, plates and bars – ASTM A 36/ A 36M.
b. Cold-formed steel – AISI SG-673.
c. Wire mesh – Provide carbon steel wire with woven diamond mesh and intermediate crimping. Wire shall be 10 gauge mesh for seasonal storage, 6 gage mesh for protection of equipment and tools.

C101003 RETRACTABLE PARTITIONS

This paragraph covers all retractable partitions and associated work, including tracks and anchoring systems. Wall assemblies above retractable partitions shall provide a sound barrier equal to, or greater than, the sound rating of the partition.

C101003 1.1 PERFORMANCE REQUIREMENTS

The retractable partitions below shall meet the following performance requirements.

C101003 1.1.1 Burning Characteristics

The system shall have a Class 'A' (under 25) flame spread rating in

conformance with ASTM E 84.

C101003 1.1.2 Fire Endurance

Provide fabric and lining with a flame spread rating of 25 or less, fuel contribution rating of 15 or less, and a smoke generation of 50 or less when tested in accordance with ASTM E 84.

C101003 1.1.3 Acoustical Performance

Sound-rated partition assemblies shall have a minimum Sound Transmission Coefficient (STC) as required by the project program. Construct sound-rated bulkheads above partition assemblies for continuity to the deck above.

C101003 1.1.4 Electrical Requirements

Electrically powered partitions shall be controlled by electrical switches located in the room where the partitions are stored. Electrical outlets shall be tied to the building electrical power system through over-head or end-mount base feeds.

C101003 1.1.5 Door Closure Field Test

Perform field tests as required in Paragraph C30 1.2 PERFORMANCE VERIFICATION AND FIELD TESTING.

C101003 1.2 PARTITION MATERIALS

a. Aluminum Extrusions - ASTM B221, Alloy 3003
b. Steel Sheets - ASTM A 653 / A653M
c. Fabric Coating - CFFA-W-101-B, Type II

C101003 1.2.1 OPERABLE PANEL PARTITIONS

Operable panel partitions shall be factory finished, supported from an overhead track without floor guides, and complete with hardware, track, and accessories necessary for operation.

a. Suspension System - shall consist of steel or heavy duty extruded aluminum track connected to the structural system by threaded rods, and trolleys designed to support the weight of the partition. Provide steel track of 16 gage minimum, phosphate treated and finished, or zinc or cadmium coated, or provide extruded aluminum track with minimum thickness of 1/8 inch (3.2 mm). Tracks shall have an integral ceiling guard. Trolleys shall have at least two ball bearing nylon or steel tired wheels spaced according to manufacturer's design criteria and four at an end post.

C101003 1.2.2 ACCORDION PARTITIONS

Provide full accordion type partitions, factory finished, supported from overhead track without floor guides, and complete with hardware,

track, and accessories necessary for operation.

Suspension System – shall consist of steel or aluminum track and trolleys designed to support the weight of the partition. Provide steel track of 16 gage minimum, phosphate treated and finished, or zinc or cadmium coated, or provide extruded aluminum track with minimum thickness of 1/8 inch (3.2 mm). Tracks shall have an integral ceiling guard. Trolleys shall have at least two ball bearing nylon or steel tired wheels spaced according to manufacturer's design criteria and four at an end post.

C101003 1.2.3 CUBICLE TRACK AND HARDWARE

Provide heavy-duty ceiling surface mounted tracks except in ceiling heights over nine feet, hanger mounted tracks may be used, with stainless steel fasteners. Track bends shall be a minimum of 18 inches radius.

C101003 1.2.3.1 Materials

a. Extruded Aluminum Track - ASTM B 221 and ASTM B 456; alloy 6063-TS, channel shape minimum 1-1/4 inch (32 mm) wide by 1-1/8 inch (29 mm) deep, 0.050 inch (1.27 mm) minimum wall thickness.
b. Carrier Unit - Provide silent type with double canted wheel carrier. Wheels shall have nylon on stainless steel hooks with swivel to support curtain. Provide 2.2 carriers for every foot of track length plus one additional carrier.

C101004 INTERIOR GUARDRAILS & SCREENS

This paragraph covers assemblies to include interior guardrails associated with open sides of floors, but not stairs' handrails. Also included are screens and associated work to include tracks and anchoring systems.

C101004 1.1 MATERIALS

a. Structural Carbon Steel - ASTM A 36/ A 36M
b. Structural Tubing - ASTM A 500
c. Steel Pipe - ASTM A 53, Type E or S, Grade B
d. Aluminum Alloy products - Products shall conform to ASTM B 209 for sheet plate, and ASTM B 221 for extrusions, and ASTM B 26/B 26M or ASTM B 108 for castings, as applicable.

C101004 1.2 FABRICATION FINISHES

C101004 1.2.1 Galvanizing

Hot-dip galvanize steel items to be exposed to water contact. Zinc-coat steel in the largest unit possible. Galvanize per ASTM A 123/ A 123M, ASTM A 153/ A 153M or ASTM A 653/ A 653M, G90, as applicable.

C101004 1.2.2 Non-Ferrous Metal Surfaces

Protect by plating, Class I anodic coatings, or 70% polyvinylidene fluoride organic coatings. See Section C30 for additional coatings/finish information.

C101004 1.3 GUARDRAILS

Design guardrails in accordance with the IBC, except delete the handrail design load reduction for code exceptions for residential, prisons, industrial, high hazard, and storage facilities. Provide materials in accordance with NAAMM PR, and provide the same size rail and post. Provide pipe collars of the same material and finish as the handrail and posts.

C101005 INTERIOR WINDOWS

For fixed interior windows, assemblies include frames, glazing, caulking, and other associated work. For other window types, see PTS Section B20, *Exterior Enclosure*. Glazing for windows specified under this section is located in C101007, "Interior Glazing."

C101005 1.1 ALUMINUM WINDOWS

Each window unit shall be a complete factory assembled unit with or without glass installed. Fabrication of window units shall comply with AAMA 101.

a. Fixed Windows - Type F, LC25 for residential, or HC40 for non-residential (commercial).
b. Sliding Glass Pass Windows - Frames and glass channels shall be of heavy type 6063-TS aluminum extrusions. Provide 1/4-inch (6.35 mm) clear tempered glass.
c. Bullet-Resistant Pass Windows - Conform to UL classification (1 through 8) as required by the installation. Provide fixed, bullet-resistant glazing with pass tray for installations requiring high levels of security.

C101005 1.2 VISION PANELS

a. Wood Windows

Wood windows shall consist of complete units, including sash, glass, frame and hardware. Window units shall meet the Grade 40 requirements of AAMA 101. Wood members that will receive a transparent finish shall be in one piece, not finger-jointed.

b. Plastic Windows

Provide PVC windows, reinforcing members, welded corners, fasteners, hardware and anchors conforming to AAMA 101 or ASTM D 4099.

1) Windows shall be fixed or operable, as stated in the project program.

2) Material and Color - Window (PVC) color shall be a consistent color all the way through the material.

c. Hollow Metal Vision Panels – shall meet the requirements of hollow

metal frames, paragraph C102001.

C101005 1.3 BULLET RESISTANT WINDOWS

Windows shall meet U.L. Classification, Rating Level 1 through 8, as required for the installation and stated in the project program. Each window shall be a complete factory-assembled unit with glass factory or field installed.

C101005 1.3.1 Glazing

Provide as specified under this section, paragraph entitled "Interior Glazing."

C101005 1.3.2 Setting Materials

Provide types required for the glazing applicable setting method specified in the GANA Glazing Manual. If sealants are employed, use elastomeric sealants, ASTM C 920, Type S or M, Grade NS, Class 12.5, Use NT.

C101005 1.4 FINISHES

Finish exposed aluminum or steel window surfaces as follows:

a. Anodic Coating

Architectural Class I (0.7 mil or thicker), designation AA-M10-C22-A41, clear (natural) or A42, integral color or A44, electrolytically deposited color anodized.

b. Organic Coating

Provide a high-performance coating in accordance with AAMA 2605 with a total dry film thickness not less than 1.2 mils (0.03 mm).

C101006 GLAZED PARTITIONS & STOREFRONTS

This paragraph covers fixed interior glazed partitions, including interior storefronts with doors. Assemblies include frames, glazing, caulking, and other associated work. See Section B20, *Exterior Enclosure*, for aluminum storefront framing components and performance requirements.

C101006 1.1 GLASS

Refer to "Interior Glazing".

C101006 1.2 SETTING AND SEALING MATERIALS

Provide as specified in the *GANA Glazing Manual*, SIGMA TM-3000 and SIGMA TB-3001, and per manufacturers recommendations.

C101007 INTERIOR GLAZING

ASTM C 1036, unless specified otherwise. Provide patterned glass where required to obscure view into bathrooms and dressing rooms.

Provide setting and sealing materials, stops and gaskets as recommended by the glass or acrylic sheet manufacturer.

Glazing thickness indicated in the following paragraphs is the minimum acceptable thickness. Provide thicker glazing if required by the code or the manufacturer for the given application.

C101007 1.1 GLASS

C101007 1.1.1 Clear Glass

Type I, class I (clear), quality q4 or q5 for patterned glass.

C101007 1.1.2 Wire Glass

Provide glazing of Type II, Class I, Form I, Quality q8 mesh stainless steel, diamond pattern, 1/4 inch (6.35 mm) thick. Glass shall comply with ASTM E 163.

C101007 1.1.3 Patterned Glass

Type II, Class 1 (translucent), Form 3 (patterned), quality q7 (decorative), Finish f2 (patterned two sides), 1/8 inch (3.2 mm).

C101007 1.1.4 Laminated Glass

Fabricate from two pieces of Type I, Class 1, quality q3 glass laminated together with a clear, 0.030 inch (0.75 mm) thick polyvinyl butyral interlayer. Total thickness shall be nominally 1/4 inch (6.35 mm).

C101007 1.1.5 Bullet-Resistant Glass

Provide bullet resistant composite glazing panel listed by UL ABPMED with a power rating corresponding to the installation prescribed, and in accordance with UL 752.

C101007 1.1.6 Tempered Glass

ASTM C 1048, Kind FT (fully tempered), Condition A (uncoated), Type I, Class 1 (clear), quality q3.

C101007 1.2 PLASTIC GLAZING

C101007 1.2.1 Bullet-Resistant Plastic Sheet

Bullet resistant rating in accordance with UL 752, Class I, clear in color. Only use bullet-resistant plastic sheet on existing interior windows that cannot be removed and replaced.

C101007 1.2.2 Polycarbonate Sheet

ANSI Z97.1, Mar-resistant, Clear and smooth both sides when used for vision glazing; Translucent, textured both sides when used for obscure glazing. Mar-resistant sheet shall have a change in haze of between 5 and 8 percent under silica carbide test, 1600 grams, ASTM D 673.

Provide warranty for polycarbonate sheet glazing for a period of 5-years that includes the following:

a. Warranty Type I, Class A (UV Stabilized) sheets against breakage;
b. Warranty Type III (coated and mar-resistant) sheets against breakage and coating delamination.
c. Warranty Type IV (coated sheet) against breakage and yellowing

C101008 INTERIOR JOINT SEALANT

Sealant joint design and application shall be in accordance with the general requirements of *Sealants: A Professionals' Guide*from the Sealant, Waterproofing & Restoration Institute. Refer to manufacturers' recommendations for chemical resistance.

C101008 1.1 JOINT SEALANT TYPES FOR INTERIOR WORK

Sealants shall be paintable, and shall match the color of adjacent surfaces.

a. Vertical Surfaces - ASTM C 920, Type M, Grade NS, Class 25, Use NT.
b. Horizontal Surfaces - ASTM C 920, ASTM D 1190 for traffic surfaces, Type M, Class 25, Use T.
c. Pools and pool decks – for vertical joints, Gun grade: ASTM C 920, Type M, Grade NS, Class 25, NT; for horizontal deck traffic joints pourable: ASTM C 920, Type M, Grade P, Class 25, T
d. Food Service – Use a Vinyl Acetate Homopolymer, or other low VOC, non-toxic sealant approved for use in food preparation areas.
e. Chemical Resistance - Ensure that all sealants are chemically compatible or resistant to adjacent materials, or materials that may come into contact with the sealants in the course of the building life.

C1020 INTERIOR DOORS

Door hardware shall be as specified in "Interior Door Hardware" in this section.

C102001 STANDARD INTERIOR DOORS

This paragraph covers all standard interior wood or hollow metal doors with frames, hardware, locks, and finish.

C102001 1.1 STEEL DOORS

Hardware preparation shall be in accordance with SDI 17, ANSI/DHI A115 and ANSI/SDI 100. Doors shall be hung in accordance with ANSI/SDI 100.

C102001 1.1.1 Standard Steel Doors

ANSI A 250.8, Level 1, (occasional use, low abuse types such as closet doors without locks); Level 2, (low use, moderate abuse types such as office/storeroom doors); Level 3, (moderate use, high abuse types such as BEQ sleeping room doors); Level 4, (high use, high abuse types such as corridors, stairways, assembly spaces, and main entry doors), with a physical performance level of 'A'. Maximum door undercut shall

not exceed 3/4 inch (19 mm).

C102001 1.1.2 Sound Insulated Doors and Frames

Provide sound insulated door and frame assemblies into rooms requiring wall assemblies to be sound insulated with a Sound Transmission Class (STC) rating as required.

C102001 1.1.3 Accessories

a. Shelves for Dutch doors shall comply with SDI 111-B, and be of steel not lighter than 16 gage.
b. Louver shall comply with SDI 111-C, shall be stationary, sight-proof type. Use lightproof louvers if function of room requires darkness. Louver frames shall be 20-gage steel with louver blades minimum 24 gage.

C102001 1.2 STANDARD STEEL FRAMES

ANSI A 250.8. Form frames with welded corners for installation in masonry partitions and knock-down field assembled corners for installation in metal stud and GWB partitions. Frames shall be set in accordance with SDI 105. Form stops and beads with 20 gauge steel.

Provide a minimum of three jamb anchors and base steel anchors per frame, zinc-coated or painted with rust-inhibitive paint, not lighter the 18 gauge. Secure frames to previously installed concrete or masonry with expansion bolts in accordance with SDI 11-F. Provide mortar infill of frames in masonry walls, and gypsum board compound infill at each jamb anchor in metal frame walls.

C102001 1.3 FINISHES

a. Factory-Primed Finish. Doors and frames in non-humid, non-corrosive environments shall be factory primed with a rust inhibitive coating as specified in ANSI A 250.8. Factory prime doors on six sides of the door.
b. Zinc-Iron Alloy Coating (Galvanealed) and Factory Primed Finish
c. Fabricate interior doors and frames (for installation in such rooms as kitchens, laboratories, battery charging, utility rooms and humid areas such as shower/drying areas, areas with frequent floor mopping, or corrosive chemical atmospheres) from zinc coated steel, alloyed type, complying with ASTM A 653/ A 653M. Factory prime doors and frames as specified in ANSI A 250.8.
d. Manufacturer’s primer shall be compatible with door finish system in C30, Interior Coatings.

C102001 1.4 WOOD DOORS

C102001 1.4.1 Wood Doors and Frames

Install wood doors and frames according to workmanship requirements of the Architectural Woodwork Institute Quality Standard 900-T-4 Custom Grade. Wood door frames may only be used in residential

construction.

For non-residential buildings provide extra-heavy doors for stairways, building entrances, corridors, assembly spaces, and other high use interior doors. Provide heavy duty doors for other non-residential locations and for residential buildings.

Wood doors shall be solid wood doors with wood core and solid wood edge bands. Vertical edge bands shall be one piece or laminated two-piece solid lumber to match face veneer species for natural finish wood doors. Reinforce door at all hardware attachments to door with sound grade hardwood. Horizontal edge bands shall be solid wood or structural composite lumber.

a. Stile and Rail Doors Provide premium or select grade Ponderosa pine, Douglas Fir, White Pine, or Yellow Poplar stile and rail doors conforming to WDMA I.S.6A-01. Doors shall be premium grade, heavy duty or as required by the project program.
b. Interior Flush Doors - Flush doors shall conform to WDMA I.S.6A-01. Doors shall be premium grade, heavy duty, or otherwise as required by the project program. Provide WDMA I.S. 1A-04 SCLC-5 structural composite lumber core, or staved lumber core, or PC-5 particleboard core construction. Do not use particleboard cores where it is anticipated that hardware may be screw mounted to the doors. Provide hardwood or softwood veneers cut for the best presentation for natural finishing of doors. Set match veneers of all components of a door opening. Face veneers shall be 1/20" thick before sanding.
c. Closet Doors – Provide flush, paneled, or louvered doors of premium or custom grade, conforming to WDMA I.S.1A-01, premium or custom grade, heavy duty. Doors shall be hinged or sliding.
d. Acoustical Doors and Frames - WDMA I.S 1-A-2004 WDMA I.S.6A-01. Doors shall be premium or custom grade, heavy duty as required by the project program. Provide acoustical doors in solid core, constructed for door, hardware, and frame to provide a Sound Transmission Class (STC) rating of 39 (minimum) when tested in accordance with ASTM E 90.

C102001 1.4.2 Wood Door Accessories

a. Door Louvers - Louver shall comply with SDI 111-C. Louver frames shall be 20-gage steel with louver blades minimum 24 gage.
b. Door Light Openings - Provide glazed openings with the manufacturer's standard wood moldings. Moldings for doors to receive a natural finish shall be of the same species and color of the face veneer.

C102001 1.4.3 Fabrication

a. Marking - Each door shall bear a stamp, brand or other identifying mark indicating quality and construction of the door.

b. Adhesives and Bonds - WDMA I.S. 1-A. Use Type I (water-proof) adhesive for assembly of interior doors and for the fabrication of stiles, rails, crossbands, and veneers. Adhesive for doors to receive a natural finish shall be non-staining. Type II (water resistant) is allowed for fabrication of core parts.

C102001 1.4.4 Finishes

Unless required otherwise by the project program, typically provide natural finish wood doors. Factory prime and or seal on all six sides of doors.

a. Factory Finish - Provide doors finished at the factory as follows: AWI Quality Standards Section 1500, specification for Conversion varnish, alkyd urea catalyzed polyurethane, or acrylated UV curable epoxy. The coating shall be AWI Quality Standards premium, medium rubbed sheen, with an open or closed grain effect. Poly-wrap prefinished wood doors at factory for shipping.
b. Field Finish - Prepare doors in accordance with WDMA I.S.1-A-2004. Factory prime or seal doors. Manufacturer's primer or sealer shall be compatible with door finish system in Section C30, *Interior Finishes*.
c. Plastic Laminate Finish - Factory applied, NEMA LD 3, 0.050 inch (1.27 mm) minimum thickness.

C102002 GLAZED INTERIOR DOORS

This paragraph covers all glazed interior doors with glass, frames, hardware and locking devices. See paragraph entitled "Interior Glazing" in this section for glazing options.

C102002 1.1 ALUMINUM DOORS, FRAMES AND STOREFRONT

Provide swing-type aluminum doors and frames complete with framing members, transoms, side-lites, and accessories. Fabricate of ASTM B 221, Alloy 6063-TS for extrusions.

C102002 1.2 FABRICATION

C102002 1.2.1 Aluminum Frames

Provide frames with removable glass stops and glazing beads to accommodate fixed glazing. Countersink screws for exposed fastenings. Jointing of framing members shall obtain hairline fit, be reinforced, and mechanically secured.

C102002 1.2.2 Aluminum Doors

Doors shall be not less than 1-3/4 inches (44 mm) thick, with a minimum wall thickness of 0.125 inch (3.2 mm), except beads and trim, 0.050 inch (1.27 mm). Full glazed stile and rail doors shall have medium or wide stiles and rails. Maximum water leakage of the door and frame shall be "no uncontrolled water penetrating systems or appearing on

systems' normally exposed interior surfaces from sources other than condensation." Water controlled by flashing and gutters that is drained to exterior and cannot damage adjacent materials or finishes is not considered water leakage.

C102002 1.2.3 Welding and Fastening

Locate welds and fasteners on unexposed surfaces, where possible. Exposed welds shall be dressed smoothly. Exposed fasteners shall have counter-sunk heads. Weld concealed reinforcements for hardware in place. Hardware reinforcements shall be of stainless steel or steel with a hot-dipped galvanized finish, and shall be secured with stainless steel screws.

C102002 1.2.4 Finishes

Provide exposed aluminum surfaces with factory finish of anodic or organic coating. Anodic coatings shall conform to AA 45, with an Architectural Class I finish, 0.7 mil or thicker. Organic coatings shall be a baked enamel finish in accordance with AAMA 2605 with a total dry film thickness not less than 1.2 mil. Exposed fasteners to match the door finish.

C102003 FIRE DOORS

This paragraph covers all interior fire doors, including all necessary frames, hardware, closing devices, and alarms associated with the door.

C102003 1.1 FIRE AND SMOKE DOORS AND FRAMES

Provide in conformance with NFPA 80 an NFPA 105. Fire doors and frames shall bear the label of UL, FM or WHI attesting to the rating required. Door and frame assemblies shall be tested for conformance per NFPA 252 or UL 10C (for positive pressure). Wood fire doors shall also comply with ASTM E 152.

Provide stainless steel astragals complying with NFPA 80 for fire-rated assemblies and NFPA 105 for smoke control assemblies.

C102004 SLIDING AND FOLDING DOORS

Provide paneled or louvered closet doors of premium or custom grade, conforming to WDMA I.S.6A-01, heavy duty. Doors shall be sliding or bi-folding, as required by the program.

C102005 INTERIOR OVERHEAD DOORS

See paragraph titled "OVERHEAD AND ROLL-UP DOORS" within PTS Section B20.

C102006 INTERIOR GATES

Any special type gate installed in the interior of a facility, including frames, hardware, hoisting devices, finish, and other associated work.

C102007 INTERIOR DOOR HARDWARE

C102007 1.1 DOOR HARDWARE

Provide the services of an Architectural Hardware Consultant (AHC), Certified Door Consultant (CDC), or an Electrified Hardware Consultant (EHC) to assist the Designer of Record in preparation of the door hardware schedule and product selection. The hardware consultant shall sign and seal the door hardware construction submittal. Provide, as far as feasible, locks, hinges, pivots, and closers from one lock, hinge, pivot, or closer manufacturer's make. All door hardware shall be clearly and permanently marked by the manufacturer, on a location to be visible after installation. Modify hardware as necessary to provide features indicated or specified. For necessary hardware items not indicated in these specification sections, provide ANSI/BHMA grade 1 rated hardware.

C102007 1.1.1 Hardware for Fire Doors

All hardware provided shall meet the requirements of NFPA 80 for Fire Doors and NFPA 101 for exit doors. Hardware shall bear the label of Underwriter's Laboratories, Inc., and be listed in UL BMD or labeled and listed by another testing laboratory acceptable to the contracting officer. Comply with NFPA 105 for smoke control assemblies.

C102007 1.1.2 Hinges

BHMA A156.1, Grade 1, 4-1/2 x 4-1/2 inches (108 x 108 mm) with non-removable pin or anti-friction bearing hinges.

C102007 1.1.3 Locks and Latches

For non-residential buildings use Series 1000, Operational Grade 1, Security Grade 2 for stairways, building entrances, corridors, assembly spaces, and other high use interior doors. Use Series 4000, Grade 1 for non-residential locations not using Series 1000 hardware. For residential buildings use Series 4000, Grade 2 for interior doors.

a. Mortise Locks and Latches - BHMA A 156.13, Series 1000, Operation Grade 1, Security Grade 2.
b. Bored Locks and Latches - BHMA A 156.2, Series 4000, Grade 1, or Grade 2.

C102007 1.1.4 Combination Locks

BHMA A 156.2. Heavy-duty, mechanical combination lockset with 5 pushbuttons, standard-sized knob or lever, 3/4-inch (19 mm) deadlocking latch, 2-3/4 inch (70 mm) back-set. Provide deadbolt key override option. Safelock, Simplex, and Venn are acceptable manufacturers. Provide a hardware grade equivalent to Grade 1, series 4000. Provide a 5-year parts and labor warranty.

A door into a sensitive area shall be fitted with a FF-L-2740A X-09 Heavy-duty, combination Electromechanical Deadbolt lock for pedestrian doors, with a drill resistant dial ring mounting plate, 2-3/4 inch (70 mm) back-set, with Automatic Lock Reset, High-Security combination scramble, and resistant to all forms of external manipulation and environmental attack. KABA-MAS is the acceptable manufacturer. Three Modes of Operation: 1) The Single Combination Mode

allows access by dialing a six-digit combination. 2) The Dual Combination Mode allows access only when two separate codes are entered within 10 seconds of one another. 3) The Supervisory/Subordinate Mode allows access by a subordinate only after a supervisor code has been entered. Audit Feature: Lock shall have a full compliment of auditing features, including non-resettable openings log, and unsuccessful attempts log (audits after 3 unsuccessful attempts) that resets once the proper access code is entered. Lock shall generate its own electrical energy with each turn of the dial, with no batteries or wires required. Lock shall be designed to fit industry standard door mounting pattern.

C102007 1.1.5 Card Key System

Provide card key type access units for specialized entries as required by the program. Provide lithium battery powered, magnetic stripe keycard locksets that are ANSI/BHMA A156.13, Series 1000, Grade 1, mortise or ANSI/BHMA A156.2, Series 4000, Grade 1, cylindrical locks, tamper resistant, UL listed with 1 inch (25 mm) throw deadbolt, 3/4-inch (19 mm) throw latch bolt, auxiliary dead-locking latch, and 2-3/4 inch (68.75 mm) backset. The latch bolt and the dead bolt shall be operated simultaneously by rotating inside lever. Locks with mechanical override lock cylinders are not acceptable. Locks shall be operated only by a correctly encoded keycard. Use of a newly issued keycard automatically re-keys the lock and voids the previous keycard. The lock shall re-lock immediately after outside lever is turned and latch retracted. Locks shall have memory that is capable of recording up to 140 entries into each room, identification of the keycard used to access the room, the date and time of entry. Entry information of the lock shall be retrievable by a data key that can be inserted into the lock and then taken to the front desk printer to display information. Other components that are required for this system at the front desk are a personal or laptop computer, printer and encoder to program each key.

For exit device locks with card key access, provide mortise type, narrow stile exit devices with 24 volt DC, solenoid option for card key exterior access at aluminum storefront doors. Provide mortise type exit devices with 24 volt DC, solenoid option with alarm and remote exterior access for card key access at insulated hollow metal doors. The alarmed exit device shall sound when exiting only.

System shall be capable of accepting a minimum of 12 keycard access levels, security auditing and computer interfacing with the existing or new management system. Provide a single point of contact customer service representative accessible by telephone with a 10-digit telephone number without additional dialing hierarchies except that a maximum 4-digit extension is permissible. On-site service shall be provided within 3 hours from request within the first 12 months of occupancy. Provide a 5-year parts and labor warranty.

C102007 1.1.6 Exit Devices

BHMA A 156.3, Grade 1. Touch bars shall be provided in lieu of conventional crossbars and arms. Use manufacturer's integral touch bars in aluminum storefront doors.

C102007 1.1.7 Cylinders and Cores

Provide cylinders and cores for new locks, including locks provided under other sections of this specification. Cylinders and cores shall have seven pin tumblers. Cylinders shall be products of one manufacturer, and cores shall be the products of one manufacturer. Rim cylinders, mortise cylinders, and knobs of bored locksets shall have interchangeable cores, which are removable by special control keys. Stamp each interchangeable core with a key control symbol in a concealed place on the core.

C102007 1.1.8 Keying System

Provide a master key system for the facility unless more than one tenant/tenant command shall reside in a facility. Provide a grand master keying system, or great, grand master keying system if multiple tenants or multiple buildings are required. Provide an extension of the existing keying system for existing facility additions. Name the manufacturer of the existing locks, and indicate if they have interchangeable cores. Provide construction interchangeable cores when subcontractors require keys during construction.

The Contractor shall coordinate a keying system meeting. The Contractor's Project Manager, Superintendent, Hardware Subcontractor, Electrical Subcontractor (if keying hardware is electric), Designer of Record, Contracting Officer, Public Works Base Hardware Specialist, and the Using Activity shall attend this meeting to establish the keying system for the project. This meeting is intended to identify base limitations, the necessary security, and access control within the facility. The meeting shall produce a marked up copy of the floor plan indicating the doors to receive locks and the doors to be keyed together, and any master keying or grand master keying

C102007 1.1.9 Keys

Furnish one file key, one duplicate key and one working key for each key exchange and for each master and grand master keying system.

C102007 1.1.10 Key Cabinet and Control System

BHMA A 156.5 Provide key cabinet with 25% more key hooks than required for interior and exterior doors.

C102007 1.1.11 Lock Trim

Cast, forged or heavy wrought construction and commercial plain in design.

a. Knobs and Roses - Knobs and roses shall meet test requirements of BHMA A 156.2 and BHMA A 156.13.
b. Lever Handles - Provide lever handles in lieu of knobs, as required by DoD ABAAS. All lever handles shall have the freewheeling feature.

C102007 1.1.12 Door Bolts

BHMA A 156.16. Provide automatic latching flush bolts for double doors with both door leafs active, BHMA A 156.3, Type 25.

C102007 1.1.13 Closers

BHMA A 156.4, Series C02000, Grade 1, with PT 4C, 1-1/2 inch piston, heavy duty forged arm, with full size cover.

C102007 1.1.14 Overhead Holders

BHMA A 156.8, Grade 1.

C102007 1.1.15 Closer Holder-Release Devices

BHMA A 156.15, Grade 1.

C102007 1.1.16 Door Protection Plates

Provide armor, mop, and kick plates conforming to BHMA A 156.6. Provide door kick plates on all doors with closers and doors leading to corridors or circulation spaces. Provide armor plates on all doors that receive cart traffic. Provide mop plates on all doors in rooms that have a mop-able floor finish.

C102007 1.1.17 Door Stops and Silencers

BHMA A 156.16, Type L03011, three per single door and four per double door.

C102007 1.1.18 Thresholds

BHMA A 156.21.

C102007 1.1.19 Door Gasketing

BHMA A 156.22. Use light-proof gasketing for room functions that require darkness and integral sound-proof gasketing on acoustically rated doors.

C102007 1.1.20 Finishes

Provide one of the following hardware finish systems, matching the exterior hardware finish system.

a. BHMA A156.18. Hardware shall have BHMA 630 finish (satin stainless steel), unless specified otherwise. Provide items not manufactured in stainless steel in BHMA 626 finish (satin chromium plated) over brass or bronze, except surface door closers which shall have aluminum paint finish, and except steel hinges which shall have BHMA 652 finish (satin chromium plated). Hinges for exterior doors shall be stainless steel with BHMA 630 finish or chromium plated brass or bronze with BHMA 626 finish. Exit devices may be provided in BHMA 626 finish in lieu of BHMA 630 finish except where BHMA 630 is specified under paragraph entitled "Hardware Sets". Exposed parts of

concealed closers shall have finish to match lock and door trim. Hardware for aluminum doors shall be finished to match the doors.

b. BHMA A156.18. Hardware shall have BHMA 612 finish (satin bronze), unless specified otherwise. Surface door closers shall have bronze paint finish. Steel hinges shall have BHMA 639 finish (satin bronze plated). Exposed parts of concealed closers shall have finish to match lock and door trim. Hardware for aluminum doors shall be finished to match the doors. Hardware showing on interior of bathrooms, shower rooms, toilet rooms, washrooms, laundry rooms, and kitchens shall have BHMA 629 finish (bright stainless steel) or BHMA 625 finish (bright chromium plated).

C102090 OTHER INTERIOR SPECIALTY DOORS

C102090 1.1 ACCESS DOORS

Provide manufactured access doors and frames of 16-gage steel minimum with concealed pivots or a continuous piano hinge and flush stainless steel cam latch. Finish with manufacturer's standard primer coat finish and paint to match the wall or ceiling unless a stainless steel finish is required in the Project Program. Provide UL Rated access doors in fire rated assemblies. Access panels located in furred wall spaces shall have an inserted material to match adjacent wall surface. Size access doors large enough to allow convenient hand and tool access and operation of controls and equipment beyond the door. If maintenance of controls or equipment beyond the door requires removal, size access door to allow removal and reinstallation of new equipment through the access door. Provide access panels capable of receiving finish material inserts in visible wall locations of habitable spaces.

C102091 OTHER INTERIOR PERSONNEL DOORS

Interior personnel doors not described by the assembly categories listed above.

C1030 SPECIALTIES

C103001 COMPARTMENTS, CUBICLES AND TOILET PARTITIONS

This paragraph covers assemblies for individual compartments, cubicles, toilet partitions and urinal screens.

C103001 1.1 TOILET PARTITIONS

FS A-A-60003. Provide toilet compartments at multi-fixture toilet rooms of Type I, Style B-Ceiling Hung, C-Overhead Braced, or F-Overhead braced-alcove. Reinforce panels to receive partition-mounted accessories. Steel and Plastic toilet partitions shall have a recovered materials content of 20 to 30 percent.

C103001 1.2 URINAL SCREENS

FS A-A-60003. Type III, Style A, floor supported and wall hung or Style D, wall hung. Wall hung urinal screens shall be secured with continuous flanges to urinal screen and wall.

C103001 1.3 HARDWARE AND FITTINGS

Chrome-plated or stainless steel door latches and coat hooks. Provide one coat hook per compartment door. Latches and hinges for handicapped compartments shall comply with DoD ABAAS.

C103001 1.4 FINISHES

Finishes shall comply with FS A-A-60003. Use only one type of partition per building.

a. Metal toilet partitions and urinal screens shall be made of stainless steel.
b. Solid plastic partitions shall be fabricated of polymer resins (polyethylene) formed under high pressure forming a single component section one inch thick. Color shall extend throughout the panel thickness.
c. Phenolic core panels.
d. Laminated plastic partitions are acceptable in low or limited use applications (one or two toilet stalls per toilet room).

C103002 TOILET AND BATH ACCESSORIES

This paragraph covers toilet and bath accessories including, but not limited to, soap dispensers, paper holders, towel receptacles, grab bars, and bathroom mirrors.

C103002 1.1 TOILET AND BATH ACCESSORIES

C103002 1.1.1 Toilet Tissue Dispensers

Provide surface or recessed mounted dispensers fabricated of stainless steel. Provide one horizontally or vertically mounted double-roll dispenser per toilet compartment, unless otherwise indicated.

C103002 1.1.2 Paper Towel Dispensers

Provide one per pair of sinks in toilet rooms without electric hand dryers, and one per room with electric hand dryers, unless otherwise indicated. Provide surface or recessed mounted towel dispenser constructed of a minimum 0.7mm 0.03 inch Type 304 stainless steel.

C103002 1.1.3 Combination Paper Towel Dispenser / Waste Receptacle

Provide a recessed or semi-recessed type with a capacity of 400 sheets of C-fold, single-fold, or quarter-fold towel and be constructed of 22-gage stainless steel. Provide one per pair of sinks, unless otherwise indicated. Provide the towel compartment door with a tumbler key lock locking mechanism.

C103002 1.1.4 Sanitary Napkin Disposal Units

Units shall be toilet partition or wall mounted of not less than 22 gage stainless steel, with top and bottom hinged access doors.

Provide one in each Woman's toilet stall, unless otherwise indicated. Each unit shall have leak-proof receptacle for disposable liners. Provide fifty disposable liners of the type standard with the manufacturer.

C103002 1.1.5 Medicine Cabinets

Provide units with plate or float glass mirrors on doors. Provide doors and frames of 16-gage steel with a continuous piano hinge and flush magnetic latch.

C103002 1.1.6 Towel Bars

Provide stainless steel towel bars with a minimum thickness of 0.015 inch (0.4 mm).

C103002 1.1.7 Grab Bars

Provide stainless steel grab bars per DoD ABAAS.

C103002 1.1.8 Robe Hooks

Provide stainless steel two-hook shape with integral wall flange, with a projection not less than 1-5/8 inches (41 mm).

C103002 1.1.9 Mirrors

Provide one manufactured framed electro-copper plated mirror per sink, or one full-size mirror for all sinks, unless otherwise indicated.

C103002 1.1.10 Soap Dispensers

Provide one soap dispenser per two sinks, with mechanical action dispensing valve. Do not mount soap dispenser on mirror. Surface mounted liquid type shall consist of a vertical Type 304 stainless steel tank with holding capacity of 1.2L (40 fluid ounces) with a corrosion-resistant all-purpose valve.

C103002 1.1.11 Electric Hand Dryer

Provide wall mount and electric hand dryer designed to operate at 110/125 volts, 60 cycles, single phase alternating current with a heating element core rating of a maximum 2100 watts. Provide dryer housing of single piece construction and of chrome plated steel. Provide one unit per three sinks, unless otherwise indicated.

C103003 MARKER BOARDS AND TACK BOARDS

This paragraph covers all marker boards, tack boards and fastening devices.

C103003 1.1 MATERIALS

a. Porcelain Enamel - Marker board writing surface shall be composed of porcelain enamel fused to a nominal 28 gage thick steel sheet, laminated to a 1/4-inch (6.35 mm) thick core material with a steel

or foil backing sheet.

b. Cork shall be a continuous resilient sheet made from soft, clean, granulated cork, relatively free from hardback and dust and bonded with a binder suitable for the intended purpose. The cork sheet shall have a tensile strength of not less than 40 PSI (275.8 kPa) when tested in accordance with ASTM F 152.

c. Tack-board Covers - Provide woven fabric or vinyl wall covering over cork tack surface.

d. Aluminum - Aluminum frame extrusions shall be alloy 6063-T5 or 6063-T6, conform to ASTM B 221, and be a minimum of 0.06 inches (1.5 mm) thick.

e. Hardwood - Exposed hardwood for frames, cabinets and cases shall be oak, walnut or mahogany, with a factory applied stain and lacquer finish.

f. Glass - Provide tempered glass in accordance with ANSI Z97.1 and in conformance with ASTM C 1048.

C103003 1.2 PRESENTATION BOARD

The presentation board shall be a laminate covered wall-hung cabinet with lockable doors. Doors are to be attached to the cabinet with continuous piano hinges, and have a catch or closure to keep doors closed when not in use. The interior of the cabinet shall contain a porcelain enamel marker board writing surface with chalk-tray, a flip chart that can be hung on an interior door panel, and fabric covered tack surface on the interior door panels.

a. Marker Board - Marker board shall be a factory assembled, one-piece unit, and have a 28 gauge nominal steel porcelain enamel writing surface and a chalk-tray with end closure. Frame shall be aluminum, powder-coated steel, oak, walnut or mahogany.

b. Tack Board - Tack boards shall consist of a minimum 1/4-inch (6.35 mm) thick natural cork laminated to a minimum 1/4-inch (6.35 mm) thick hardboard, shall have an oak or aluminum frame, and be vinyl or fabric covered. Covers shall have a Class 'A' flame spread rating of 0-50, and a smoke developed rating of 0-450 in accordance with ASTM E 84.

C103004 IDENTIFYING DEVICES

This paragraph covers all signs, plaques, and traffic markers.

C103004 1.1 ASSEMBLIES

The signage system assemblies shall consist of three primary elements; a structural rail (with coordinating rail joiners to increase sign height in the field), removable copy inserts, and interlocking end caps or frame, and trim.

C103004 1.1.1 Inserts

The signage rails shall be designed as to accept ABS plastic signage inserts.

C103004 1.1.1.1 Insert Fabrication

The insert is the signage member to which message signage copy in the form of letters, numbers, and symbols shall be applied, and shall be interchangeable with similar sized rails of any other sign of equal or greater width and height. The ends of the rail and insert assembly shall be enclosed by end caps of prefinished 6064T5 extruded aluminum. Inserts shall be fabricated from 0.090 minimum ultra-violet resistant thickness extruded ABS Acrylic sheet core with 20.003 polycarbonate non-glare clear cap bonded to the core during the extrusion texturing process.

C103004 1.1.2 End Caps

End caps shall be injection-molded ABS plastic with integral color. The end caps shall be interchangeable to either end of each sign type, and any other similar sign of equal height. The end caps shall be interlocking mechanically with the inserts, and rail, requiring no tools for assembly. End caps shall utilize straight corners (instead of radius corners). Spring clips shall be steel. Plastic spring clips are not acceptable.

C103004 1.1.3 Trim

Optional accessory top and bottom trim frames of prefinished (color as indicated 6063T5 extruded aluminum shall be provided to the signage types indicated.

C103004 1.1.4 Mounting

Mounting of the modular signage system shall include surface mounting with screw-on applications for interior and exterior walls and on selected doors as indicated, at the locations indicated, and other mounting devices as indicated.

C103004 1.1.5 Graphics Application

a. Tactile Letters and Symbols

Chemically weld tactile letters and symbols to front surface of signage inserts where indicated and where required by DoD ABAAS. Tactile letters and symbols shall be sized as indicated.

b. Braille

Grade II Braille. Provide Grad II Braille inlaid strip as indicated to match sign color.

C103004 1.2 ALUMINUM ALLOY PRODUCTS

Provide ASTM B 209 for aluminum sheet or plate, ASTM B 221 for aluminum extrusions and ASTM B 26/B 26M or ASTM B 108 for aluminum castings. Provide aluminum extrusions at least 1/8-inch (3.2 mm) thick and aluminum plate or sheet at least 16 gage thick. Provide aluminum castings of solid aluminum cast certified by AA 46 alloy designation B443.0. Where anodic coatings are specified, alloy shall conform to Aluminum Association’s alloy designation 514.0 or A514.0.

C103004 1.2.1 Aluminum Finishes

Provide exposed aluminum finishes with either mill finish, factory finished with anodic coating or organic coating. Anodized finishes shall conform to AA 45, Architectural Class I or II, with a coating thickness 0.7 mil or thicker. Organic coatings shall be a baked enamel finish with a dry film thickness not less than 1.2 mils, conforming to AAMA 605.2.

C103004 1.3 STEEL PRODUCTS

Provide ASTM A 36/A 36M for structural steel, ASTM A 167 for sheet and plates.

C103004 1.4 CAST METAL

a. Cast Aluminum, ASTM B 108
b. Cast Bronze, ASTM B 62

C103004 1.5 GLASS

ASTM C 1036, Type 1, Class 1, Quality q3

C103004 1.6 FIBER-REINFORCED POLYESTER (FRP)

ASTM D 3841, Type II, Grade 1

C103004 1.7 ACRYLIC SHEET

ASTM D 4802, Type III

C103004 1.8 POLYCARBONATE SHEET

SAE AMS 3611

C103004 1.9 EXTERIOR POST AND PANEL SIGNS

C103004 1.9.1 Posts and Panels

Provide one-piece extruded aluminum posts with not less than 0.125 inch (3.2 mm) wall thickness. Posts shall permit attachment of panel framing system. Provide cap for each post. Panel framing system shall consist of aluminum extrusions and interlocking track components designed to interlock with concealed fasteners. Panels shall be fabricated of rectangular extruded tubular aluminum with a minimum wall thickness of 0.125 inches. Panels shall be removable and interchangeable. Posts shall be embedded in solid concrete foundation.

C103004 1.9.2 Illumination

Provide concealed lighting within panel framing members. Provide T-12 slim-line lamps,. Ballast shall be integrally mounted with high power factor and rated for use in up to minus 20 degrees F (minus 29 degrees C) ambient starting temperature.

C103005 LOCKERS

C103005 1.1 STEEL CLOTHING LOCKERS

C103005 1.1.1 FS AA-L-00486 (Rev J), enameled steel.

Provide ventilated, Single Tier Units (unless multi-tier permitted by Project Program), fully framed. Provide galvanized or galvaneal shelves and bottoms for all lockers, and fully galvanized or galvaneal lockers in locker spaces adjoining shower rooms. Provide full height door stiffeners.

C103006 SHELVING

Assemblies include all types of shelving with brackets and all supporting materials and finish, if required.

C103007 FIRE EXTINGUISHER CABINETS

Cabinet shall be constructed of 16 gauge cold-rolled steel door panel / front, and a 22 gauge cold-rolled steel tub. Cabinet shall be fire-rated if located in a fire rated wall assembly, and have a full-length piano hinge, and baked enamel finish. Provide a stainless steel cabinet door if cabinet is exposed to the environment. Size and locate fire extinguisher cabinets to encase extinguisher as required by NFPA 10 & 101.

C103008 COUNTERS

C103008 1.1 LAMINATE COVERED COUNTER TOPS

Fabricate with lumber and a core of exterior grade plywood (A-C Grade) or particleboard (ANSI A208.1, Grade 1-M-2 or better), glued and screwed to form an integral unit. Bond laminated plastic under pressure to exposed surfaces using manufacturer’s recommended glue.

a. Countertops shall be constructed to meet "Custom" quality grade as defined in AWI Quality Standards.
b. Finish shall meet NEMA LD 3, Grade PF 42 for plastic laminate.

C103008 1.2 ACRYLIC COUNTER TOPS

Provide 100% acrylic counter tops for use in non-residential construction.

Solid surfacing material shall consist of 100% pure acrylic polymer, mineral fillers, and pigments. The material shall be homogenous, not coated or laminated. Superficial damage to a depth of 0.010 inch (.254 mm) shall be repairable by sanding or polishing. Install with factory recommended fasteners/adhesives/sealant. Provide the following performance characteristics:

a. Tensile strength, ASTM D 638: 5800 psi minimum
b. Hardness, ASTM D 2583: Barcol Impressor 55 minimum
c. Flammability, ASTM E 84: Class I/A, flame spread 25 maximum; smoke developed 30 maximum
d. Thermal Expansion, ASTM D 696:.00002 in/in/F maximum
e. Boiling water resistance, NEMA LD 3: No effect

f. High temperature resistance, NEMA LD 3: No effect
g. Liquid absorption, ASTM D 570 (24 hours): 0.10 percent maximum
h. Mold and mildew growth, ASTM G 21: No growth, no effect
i. Bacteria growth, ASTM G 22: No growth, no effect
j. Sanitation, NSF 51: "Food Contact" approval for food area applications
k. Impact resistance, NEMA LD 3 (1/2 lb. ball drop): 1/4 inch material, 36 inch drop, no failure 1/2 inch material, 120 inch drop, no failure

C103009 CABINETS

This paragraph includes casework items that are permanently fixed in-place. Included are all cabinetry and millwork items with their associated accessories and anchoring devices.

C103009 1.1 WALL AND BASE CABINETS

Wall and base cabinets shall be of the same construction and appearance, with solid ends and frame fronts, or with frames all around. Frames shall be not less than 3/4 inch by 1 1/2 inches (19 mm by 38 mm) hardwood. All ends, bottoms, backs, and partitions shall be hardwood plywood. Cabinet doors and drawer fronts shall be a minimum 3/4 inch (19 mm) of either plywood or medium density fiberboard cores with solid edge bands.

C103009 1.1.1 Quality Standards

Wall and base cabinets shall be constructed to meet "Custom" quality grade as defined in AWI Quality Standards, except where this specification exceeds AWI Custom.

C103009 1.1.2 Hardware

Provide cabinet hardware including two self-closing hinges for each door and two side-mounted metal drawer slides for each drawer and pulls for all doors and drawers as follows. All cabinet hardware exposed to view shall be ANSI/BHMA 156.9, Grade 1, and comply with the following requirements:

a. Concealed Euro-Style, back mounted hinges with opening to 165 degrees and a self-closing feature at less than 90 degrees.
b. Drawer slides shall have a static rating capacity of 100 lbs. (444 N).
c. Provide adjustable shelving standards with shelf support hardware for wall cabinets.
d. Provide heavy-duty magnetic latch and door and drawer catch

C103009 1.1.3 Finish

Provide plastic laminate (NEMA LD3) or transparent finish with sealer and varnish as selected by Designer of Record.

C103010 CASEWORK

This paragraph includes all built-in premanufactured metal cabinetry for

specialized functions such as labs, libraries, medical and dental facilities. At a minimum, all casework shall conform to the following chart:

Metals	Thickness and Material
Uprights (all)	
Horizontal foot	4" x 2" tube, 14 ga. (.075") HRPO Steel
Vertical upright	6" x 2" tube, 11 ga. (.118") HRPO Steel
Leveler	Threaded steel with plastic foot and rubber boot
Bridge Channels	
Channel (halves)	14 ga. (.075") CQCR Steel
Utility Rails	
Top and Bottom Channels	18 ga. (.047") CQCR Steel
Covers	18 ga. (.047") CQCR Steel
Dividers	16 ga. (.059") CQCR Steel
End Brackets	22 ga. (.030") CQCR Steel
Top Stretchers	
Channel	14 ga. (.075") CQCR Steel
End Brackets	18 ga. (.047") CQCR Steel
Vertical Utility Chase	
Chase Assembly	
Upper Chase Cover	
Cover	16 ga. (.059") CQCR Steel
Middle Chase Cover	
Cover	16 ga. (.059") CQCR Steel
Lower Chase Cover	
Cover	16 ga. (.059") CQCR Steel
Attachment Bracket	11 ga. (.118") CQCR Steel
Chase Cover	
Panel	18 ga. (.047") CQCR Steel

Bridge Cover Extension

Panel	18 ga. (.047") CQCR Steel

Chase Cabinet Filler

Panel	18 ga. (.047") CQCR Steel

Cantilever

Cantilever	11 ga. (.118") HRPO Steel

End Panel

Outer Cover	11 ga. (.118") HRPO Steel
Inner Cover	20 ga. (.036") CQCR Steel
Angle Bracket	16 ga. (.059") CQCR Steel

Shelves

Shelf (all)	16 ga. (.059") CQCR Steel
End Panels (all)	14 ga. (.075") CQCR Steel
Reinforcement Channel (Flat and Seismic Flat Shelves)	16 ga. (.059") CQCR Steel
Seismic Shelf Support Lip	20 ga. (.036") CQCR Steel

Laminate Overhead Storage Cabinets

Hanger bracket	14 ga. (.075") CQCR Steel
Solid door pull	Steel, aluminum or zinc
Glass door pull	Steel
Glass door track	Aluminum
Reinforcing hat channel for shelf	11 ga. (.118") HRPO Steel

Steel Overhead Storage Cabinets

Sides, Back and Door	20 ga. (.036") CQCR Steel
Top, Bottom and Shelf	18 ga. (.047") CQCR Steel
Hanger bracket	14 ga. (.075") CQCR Steel
Solid door pull	Steel, aluminum or zinc
Glass door pull	Steel

Glass door track	Aluminum
Reinforcing hat channel for shelf	11 ga. (.118") HRPO Steel

Laminate Storage and Sink Cabinets

Drawer glides	Steel rails with ball bearings
Door hinges	Steel
Door and Drawer pulls	Steel, aluminum or zinc
Leveler bracket	11 ga. (.118") HRPO Steel
Leveler	Threaded steel with plastic foot and rubber boot
Reinforcing hat channel for shelf	11 ga. (.118") HRPO Steel

Steel Storage and Sink Cabinets

Sides, Back and Top	20 ga. (.036") CQCR Steel
Base, Bottom and Shelf	18 ga. (.047") CQCR Steel
Door (interior and exterior panels)	20 ga. (.036") CQCR Steel
Drawer glides	Steel rails with ball bearings
Door hinges	Steel
Door and Drawer pulls	Steel, aluminum or zinc
Leveler bracket	11 ga. (.118") HRPO Steel
Leveler	Threaded steel with plastic foot and rubber boot
Reinforcing hat channel for shelf	11 ga. (.118") HRPO Steel

Cord Reel

Cord Reel	11 ga. (.118") HRPO Steel

Cable Storage Tray

Tray	24 ga. (.024") CQCR Steel

Phenolic Drying Rack

Mounting brackets, in-line	14 ga. (.075") CQCR Steel

Mounting brackets, end-of-bench	14 ga. (.075") CQCR Steel
Modular Power Block with GFCI Receptacle	
Housing and back bracket	16 ga. (.059") CQCR Steel
Modular Connector Faceplates	
Faceplate	16 ga. (.059") CQCR Steel
Non-Metals	**Thickness and Material**
Laminate Worksurfaces	
Worksurface core	1.12" X 45 lb/cu ft medium density particle board
Top and bottom laminate (standard)	.012" thick laminate
Front edge banding	3mm thick rigid plastic
Side and back edge banding	1mm thick, flat profile rigid plastic
ChemsurfÂ® Chemical-Resistant Laminate Worksurfaces	
Worksurface core	1.12" X 45 lb/cu ft medium density particle board
ChemsurfÂ® (option)	VGP grade, resin-impregnated kraft paper
Front edge banding	3mm thick rigid plastic
Side and back edge banding	1mm thick, flat profile rigid plastic
Phenolic Resin Worksurfaces	
Worksurface core	.75" thick, phenolic resin-impregnated kraft paper
Phenolic Drying Rack	
Panel	1.00" thick, phenolic resin-impregnated kraft paper
Pegs	.38" dia x 5" long polypropylene pegs
Phenolic Drip Trough	
Trough	1.00" thick, phenolic resin-impregnated kraft paper
Drain tube	.50" OD rigid phenolic tube

Drain flexible tube	.50" OD x 3' long flexible clear PVC tubing

Laminate Overhead Storage Cabinets

Panel core (Top, Bottom, Ends, Back, Door, Shelf)	.75" X 45 lb/cu ft industrial grade particle board
Laminate	.012" thick laminate
Cabinet edge banding	1mm thick, flat profile rigid plastic
Door edge banding	2mm thick, flat profile rigid plastic
Glass door	.25" thick tempered safety glass

Steel Overhead Storage Cabinets

Glass door	.25" thick tempered safety glass

Laminate Storage and Sink Cabinets

Panel core (Top, Bottom, Base, Ends, Back, Door, and Shelf)	.75" X 45 lb/cu ft industrial grade particle board
Laminate	.012" thick laminate
Cabinet edge banding	1mm thick, flat profile rigid plastic
Drawer/Door edge banding	2mm thick, flat profile rigid plastic
Drawer/Door stop	Rubber

Steel Storage and Sink Cabinets

Drawer/Door stop	Rubber

Power Block

Housing	Ultramid Nylon

Harness-to-Harness Connector

Housing	Ultramid Nylon

Duplex Receptacles

Housing	Ultramid Nylon

Modular Harnesses and Multipurpose Power Infeeds

Connector housing	Ultramid Nylon

Wire Manager

Channel	Rigid plastic

C103011 CLOSETS

This paragraph includes all built-in closets with associated work and finishes.

C103012 FIRESTOPPING PENETRATIONS

This paragraph covers fire-stopping assemblies to include sleeves, caulking and flashing. See PTS Section D40, *Fire Protection*, for additional requirements.

C103012 1.1 FIRESTOPPING

Provide asbestos-free firestopping material capable of maintaining an effective barrier against flame, gases and temperature. Provide non-combustible firestopping that is non-toxic to human beings during installation or during fire conditions. Devices and equipment for firestopping service shall be UL FRD listed or FM P7825 approved for use with applicable construction, and penetrating items.

C103012 1.1.1 Fire Hazard Classification

Material shall have a flame-spread of 25 or less, a smoke developed rating of 50 or less when tested in accordance with UL 723 or UL listed and accepted.

C103012 1.1.2 Firestopping Rating

Firestopping materials shall be UL FRD listed or FM P7825 approved for "F" and "T" ratings at least equal to the fire-rating of the fire wall in which penetrated openings are to be protected.

C103013 SPRAYED FIRE-RESISTIVE MATERIALS

See PTS Section D40, *Fire Protection*, for additional requirements.

C103013 1.1 SPRAYED FIRE-RESISTIVE MATERIALS

C103013 1.1.1 Quality Assurance

A pre-installation conference shall be held with the manufacturer’s approved installer prior to the application of the sprayed fire-resistive materials. See Paragraph C10 1.2 for field testing requirements for the fire-resistive material. Products provided shall not contain asbestos per 40 CFR 763.

C103013 1.1.2 Warranty

Contractor shall provide manufacturer's standard materials and workmanship warranty stating that the manufacturer agrees to repair or replace materials that fail within 2 years, or as required by the project program, from date of Substantial Completion.

C103013 1.1.3 Material Composition

Provide sprayed fire-resistive material consisting of factory-mixed, dry formulation of gypsum or Portland cement binders and light-weight mineral or synthetic aggregates mixed with water at the Project site, or provide sprayed-fiber fire-resistive material consisting of factory-mixed, dry formulation of inorganic binders, mineral fibers, fillers, and additives conveyed in a dry state by pneumatic equipment and mixed with water at a spray nozzle to form a damp, as-applied product.

C103013 1.1.4 Physical Properties

a. Dry Density: 15 lb/cubic foot (240 kg/cubic meter) for referenced fire-resistance design to attain the ratings indicated, per ASTM E 605.
b. Thickness: Provide minimum average thickness required for fire-resistance design indicated according to the following criteria, but not less than 0.375 inch (9 mm), per ASTM E 605:

   1) Where the referenced fire-resistance design lists a thickness of 1 inch (25 mm) or greater, the minimum allowable individual thickness of sprayed fire-restive material is the design thickness minus 0.25 inch (6 mm).

   2) Where the referenced fire-resistance design lists a thickness of less than 1 inch (25 mm) but more than 0.375 inch (9 mm), the minimum allowable individual thickness of sprayed fire-resistive material is the greater of 0.375 inch (9 mm) or 75 percent of the design thickness.

   3) No reduction in design thickness is permitted for those fire-resistance designs whose fire-resistance ratings were established at densities of less than 15 lb/cubic foot (240 kg/cubic meter).
c. Bond Strength: 150 lb/sq. ft. (7.2 kPa) minimum per ASTM E 736.
d. Compressive Strength: 5.21 lb/sq. in. (35.9 kPa) as determined per ASTM E 761. Minimum thickness of sprayed fire-resistive material tested shall be 0.75 inch (19 mm) and minimum dry density shall be as specified, but not less than 15 lb/cubic foot (240 kg/cubic meter).
e. Corrosion Resistance: No evidence of corrosion per ASTM E 937.
f. Deflection: No cracking, spalling, or delaminating per ASTM E 759.
g. Effect of Impact on Bonding: No cracking, spalling, or delaminating per ASTM E 759.
h. Air Erosion: Maximum weight loss of 0.025 g/sq. foot (0.270 g/sq. meter) in 24 hours per ASTM E 859.
i. Fire-Test-Response Characteristics: Provide sprayed fire-resistive materials with the following surface-burning characteristics per ASTM E 84 by United Laboratories: flame-spread index of 10 or less and a smoke developed index of 0.
j. Fungal Resistance: No observed growth on specimens per ASTM G 21.

C103014 ENTRANCE FLOOR GRILLES AND MATS

Provide entrance mats at all entrances to the facility. Provide recessed entrance mats at building entrances with enclosed vestibule and or surface applied entranceway mats or entranceway floor tiles at all other entrances. Entranceway mats and entranceway floor tile require the use of a transition edge where he mat adjoins other floor materials. Mat system shall meet ASTM D-2047 coefficient of friction requirements for dry and wet surfaces. All portions of mat system shall comply with ASTM E 648, Class I for flammability and ASTM E 662 for smoke development of â‰¤ 450. Fasteners shall be non-corrosive screws and anchors for securing frames together to floors. Provide continuous vinyl bottom cushion to quiet clatter at recessed entrance mat systems. Hinges shall be flexible aluminum or thermoplastic hinge retained in aluminum tread port, and allow debris and moisture to flow through recessed mat. Provide ball and socket hinge for easy roll-up of recessed mat inserts for cleaning. Recessed entrance mat systems shall use either an aluminum or thermoplastic framework and shall have replaceable wearing surface inserts. Provide inserts as follows:

a. Carpet Inserts - Carpet insert fiber shall be colorfast, solution dyed, anti-static, anti-microbial, and waterproof. Fiber shall be 100% nylon or polypropylene. Each carpet fiber shall be bonded to rigid ply backing to prevent fraying and supplied in continuous splice-free lengths. Carpet shall be minimum of 30-oz./ydÂ².
b. Vinyl or Rubber Inserts - Vinyl or rubber inserts shall be removable and be made from recycled materials wherever possible. Inserts shall have serrated edges for scraping purposed or flexible abrasive grit tape, bonded to a rigid vinyl tread insert.

C103014 1.1 RECESSED MAT THERMOPLASTIC FRAME PROPERTIES

Thermoplastic frame shall be colorfast and UV-resistant. Tensile strength of frame shall comply with ASTM D 638. Tensile impact of frame shall comply with ASTM D 1822. Flexural strength of frame shall comply with ASTM D 790. Shore D hardness of frame shall comply with ASTM D 2240. Rockwell R hardness of frame shall comply with ASTM D 785. Coefficient of thermal expansion of frame shall comply with ASTM D 696.

C103014 1.2 RECESSED MAT ALUMINUM FRAME REQUIREMENTS

Aluminum frame and rail shall comply with ASTM B 221, alloy 6063-T5. Frame shall have butted corners and be factory coated with zinc chromate or manufacturer's standard protective finish where surfaces are in contact with concrete. Provide standard mill finish, color anodized finish complying with AAMA 606.1, clear anodized finish complying with AAMA 607.1, or bronze complying with ASTM B455, alloy 385.

C103014 1.3 SURFACE MOUNTED/LOOSE-LAY ENTRANCE MATS

Loose-lay mats shall have beveled vinyl or rubber transition edge and shall have surface of carpet or vinyl/rubber surfaces. Edges shall conform to ADA accessibility guideline 4.5.2, for loose-lay surface applications. Mats shall be easily removed yet remain adhered to floor to prevent mat from moving as pressure from walking is applied. Do not use carpet inserts unless directed otherwise.

C103014 1.4 SURFACE APPLIED ENTRANCEWAY FLOOR TILE

Applied entranceway floor tiles shall be in the form of carpet tiles, carpet tiles with vinyl or rubber scrubbing surfaces, or tiles of thermoplastic scrubbing surfaces only. Tiles shall be installed in areas where permanent mat is required but slab is not recessed to receive permanent recess mat. Tiles shall be securely installed without obvious seams, cleanable, dimensionally stable, and with maximum finished tile thickness of 1/2" above finished floor line. Carpet fibers shall 100% nylon or polypropylene, anti-static, anti-microbial, colorfast, solution dyed, mold and mildew resistant, and waterproof with minimum face weight of 30 oz/yd2. Thermoplastic only tiles shall be PVC free and UV-resistant.

C103015 ORNAMENTAL METALWORK

Building components made from ornamental metals. Ornamental stair handrails are included in B1010 EXTERIOR STAIRS and PTS C20, *Stairs*.

C103090 OTHER INTERIOR SPECIALTIES

This paragraph covers other interior specialties not described by other assembly categories listed previously.

C103090 1.1 PROJECTION SCREEN

Motorized projection screen shall be wall, ceiling, or above ceiling mounting, and shall have a 120V motor that is lubricated for life, quick reversal type, has overload protector, integral gears, and preset accessible limit switches. Screen shall be flame retardant, mildew resistant and have black masked borders. Controls shall be wall mounted with wiring concealed within the wall construction. Pull-down projection screens shall be provided in lieu of motorized projection screens as approved by the Activity, as specified in the project program.

C103090 1.2 OTHER INTERIOR SPECIALTIES

Also see PTS Sections C20 and C30 for additional interior specialties not specified here.

-- End of Section --

THIS PAGE HAS BEEN INTENTIONALLY LEFT BLANK

SECTION C20

STAIRS
11/10

C20 GENERAL

RFP Part 3 including the Engineering System Requirements (ESR) provide project specific requirements. The RFP Part 4, Performance Technical Sections (PTS) provide generalized technical requirements that apply to multiple facility types and include more requirements than are applicable to any one project. Therefore, only the RFP Part 4 requirements that apply to the project and further define the RFP Part 3 project specific requirements are required.

C20 1.1 DESIGN GUIDANCE

Provide the design and installation in accordance with the following references. This Performance Technical Specification (PTS) adds clarification to the fundamental requirements contained in the following Government Standards. The general requirements of this PTS section are located in PTS Section Z10, *General Performance Technical Specification*.

Industry standards, codes, and government standards that are referenced in the section text that are not found in the Unified Master Reference List (UMRL) in the Construction Criteria Base (CCB) at the Whole Building Design Guide Website , are listed below for basic designation identification. Comply with the required and advisory portions of the current edition of the standard at the time of contract award.

C20 1.1.1 Industry Standards and Codes

AISC American Institute of Steel Construction

C20 1.1.2 Government Standards

UNIFIED FACILITIES CRITERIA (UFC)

UFC 1-200-01	General Building Requirements(A reference in this PTS section to UFC 1-200-01 requires compliance with the Tri-Service Core UFCs that are listed in UFGS Section 01 33 10.05 20, which includes the following significant UFC(s):UFC 3-101-01, Architecture)

C20 1.2 PERFORMANCE VERIFICATION AND ACCEPTANCE TESTING

Verification of satisfactory stair performance shall be via Performance Verification Testing, as detailed in this section of the RFP.

C20 1.2.1 Field Testing for Concrete

Field Quality Control Test Reports to be submitted to DOR shall comply

with ACI 301. If concrete is found to be below the strength required in the tests, Contractor shall remove and replace that concrete and all associated building components at his own expense.

C20 1.3 DESIGN SUBMITTALS

Design Submittals shall be in accordance with Z10, *General Performance Technical Specifications*, UFGS section 01 33 10.05 20, *Design Submittal Procedures*, UFC 1-300-09N, *Design Procedures*and UFC 3-101-01, *Architecture*.

C20 1.4 CONSTRUCTION SUBMITTALS

Submit construction submittals in accordance with PTS Section Z10, *General Performance Technical Specification*. In addition to the Z10 requirements the Designer of Record (DOR) shall approve the following construction submittals as a minimum:

Stairs, handrails.

C2010 STAIR CONSTRUCTION

C201001 INTERIOR AND EXTERIOR STAIRS

Provide primed and painted steel stairs with concrete filled pans or cast-in-place concrete stairs for industrial and commercial construction. Design load shall not be less than 100 PSF (4.8 kPa) for live load, and 300 pounds (136 kg) for concentrated loads. Required means of egress stairs shall conform to NFPA 101. Provide steel guard and handrails.

C201001 1.1 STEEL STAIRS

Design shall conform to AISC S335 or AISC S342L.

C201001 1.1.1 Materials

a. Structural Carbon Steel - ASTM A 36/A 36M
b. Structural Tubing - ASTM A 500
c. Steel Pipe - ASTM A 47
d. Gratings - Gray cast iron ASTM A 48, Class 40
e. Metal plank grating, non-slip requirement, FS RR-G-1602 aluminum ASTM B 209, 6061-T6; steel ASTM A 653/ A 653M, G90.
f. Floor Plates, Patterned - ASTM A 786/A 786M, 14 gage.
g. Anchor Bolts - ASTM A 307
h. Galvanized Structural Steel - All steel exposed to the environment or direct water contact shall be galvanized in accordance with ASTM A 123 /A123M, ASTM A153/A153M, and ASTM A653/A653M, Z275 (G90) coating. Galvanize all components after fabrication in accordance with ASTM A385. Fabricate all steel components in the largest units practical using bolted connections for field assembly. Repair damage to, or voids in, galvanizing in accordance with ASTM A780, Annex A1 or Annex A3.

C201001 1.2 ALUMINUM ALLOY PRODUCTS

Conform to ASTM B 209 for sheet plate, ASTM B 221 for extrusions and ASTM B 26/B 26M or ASTM B 108 for castings. Aluminum extrusions shall be at least

1/8-inch (3.2 mm) thick and aluminum plate or sheet at least 0.050 inch (1.27 mm) thick.

C201001 1.3 FINISHES

C201001 1.3.1 Galvanizing

Hot-dip galvanizing: ASTM A 123/A123M, ASTM A 153/A 153M or ASTM A 653/A 653M, G90, as applicable.

C201001 1.3.2 Aluminum Finishes

Protect by plating, Class I anodic coatings, or 70% polyvinylidene fluoride organic coatings. See PTS Section C30 for additional coatings/finish information.

C201001 1.3.3 Safety Treads

NAAMM BG steel, Type W (welded).

C201001 1.3.4 Other Coatings

See PTS Section C30, *Interior Finishes*, for painted finishes.

C201001 1.4 CONCRETE STAIRS / STEPS

Provide interior or exterior concrete steps and stair with non-slip finish. For interior stairs, provide rubber or other finish treads. For exterior stairs, provide cast-in-place abrasive nosing. Provide steel guard and handrails as necessary. Fire stairs shall comply to NFPA 101.

C201001 1.4.1 Materials

a. Concrete - ACI 211.1, ACI 301/301M, and ACI 318/318M, with a compressive strength of 3,000 psi (20,680 kPa) or greater. Concrete Mix Design shall be suitable for the job conditions.
b. Reinforcements - Bars, fabrics, connectors, and chairs shall be galvanized.
c. Reinforcing Bars - ACI 301/301M
d. Welded Wire Fabric - ASTM A 185 or ASTM A 497
e. Cast Aluminum Safety Nosings – For exterior concrete stairs, provide safety nosings of cast aluminum with abrasive surfaces or with abrasive inserts.

C201001 1.5 WOOD STAIRS

Wood stairs may be used only for residential construction. Provide wood treads of minimum 1-1/4 inches thickness, of clear red or white oak. Risers shall be nominal one-inch finish lumber. Provide natural finish equivalent to one coat of sealer and two coats of varnish on all exposed surfaces.

C201002 FIRE ESCAPE STAIRS

Design fire escapes of the type and arrangement to conform to Fire Escape Stairs, of NFPA 101, Life Safety Code. Escape stairs shall be of steel or aluminum, conforming to the requirements of this specification section.

C201090 STAIR HANDRAILS, GUARDRAILS, AND ACCESSORIES

C201090 1.1 HANDRAILS

Design handrails in accordance with the IBC, except delete the handrail design load reduction code exceptions for residential, prisons, industrial, high hazard, and storage facilities. NAAMM PR, provide the same size rail and post. Provide series 300 stainless steel pipe collars. Factory coat all metal railings (except for ornamental metals such as brass, bronze, stainless steel, and nickel-silver) with a high performance coating in accordance with AAMA 2605, with a minimum coating thickness of 1.2 mils unless otherwise noted.

C201090 1.1.1 Steel Handrails

Provide steel handrails, including inserts in concrete, steel pipe conforming to ASTM A 53 or structural tubing conforming to ASTM A 500, Grade A or B of equivalent strength. Railings shall be hot-dip galvanized and shop painted for exterior applications and primed and shop painted for interior applications. Railing may be unpainted hot-dip galvanized in industrial areas.

C201090 1.1.2 Aluminum Handrails

Provide aluminum pipe railing conforming to ASTM B 429 or square aluminum semi-hollow tube conforming to ASTM B 221. Railings shall be coated with a high performance coating or anodized in accordance with AAMA 611, Class I.

C201090 1.1.3 Ornamental Handrails

Provide ornamental railings. Provide anchorage and fasteners as recommended by the product manufacturer. Railing system shall conform to ASTM E 985, minimum concentrated test load requirement.

C201090 1.1.4 Glass Handrails

Provide glass railings consisting of continuous 1/2-inch (13 mm) beveled tempered glass structural balusters with continuous railing cap and bottom shoe molding. Railing cap and shoe molding shall be 6063-T52 aluminum, type 304 stainless steel, brass, or bronze.

C201090 1.1.5 Wood Handrails

Wood handrails shall only be used for residential construction. Provide wood handrails of pre-finished natural hardwood. Wood shall be coated with hard acrylic finish to withstand indentations.

C201090 1.2 METAL LADDERS

C201090 1.2.1 Metal Ladders

Provide vertical ladders conforming to Section 7 of 29 CFR 1910.27.

C201090 1.2.2 Installation

Offset distance from the rungs to the finished wall surface not less than 7 inches (175 mm). Provide heavy clip angles riveted or bolted to the stringer and drilled for not less than two 1/2-inch (12 mm) diameter expansion bolts as indicated. Provide intermediate clip angles not over 48 inches (1200 mm) on center.

C201090 1.2.3 Ladder Cages

Where the height of the ladder is greater than 20 feet (6000 mm), provide a cage to conform to 29 CFR 1910.27.

a. Cage fabrication – Provide attachments for fastening bands to the side rails of ladders or directly to the structure.

-- End of Section --

THIS PAGE HAS BEEN INTENTIONALLY LEFT BLANK

SECTION C30

INTERIOR FINISHES
11/10

C30 GENERAL

RFP Part 3 including the Engineering System Requirements (ESR) provide project specific requirements. The RFP Part 4, Performance Technical Sections (PTS) provide generalized technical requirements that apply to multiple facility types and include more requirements than are applicable to any one project. Therefore, only the RFP Part 4 requirements that apply to the project and further define the RFP Part 3 project specific requirements are required.

C30 1.1 DESIGN GUIDANCE

Provide the design and installation in accordance with the following references. This Performance Technical Specification (PTS) adds clarification to the fundamental requirements contained in the following Government Standards. The general requirements of this PTS section are located in PTS Section Z10, *General Performance Technical Specification*.

Industry standards, codes, and Government standards referenced in the section text that are not found in the Unified Master Reference List (UMRL) in the Construction Criteria Base (CCB) at the Whole Building Design Guide Website , are listed below for basic designation identification. Comply with the required and advisory portions of the current edition of the referenced standard at the time of contract award.

C30 1.1.1 Industry Standards And Codes

FLOOR COVERING INSTALLATION CONTRACTOR'S ASSOCIATION (FCICA)

FLOOR COVERING INSTALLATION BOARD (FCIB)

C30 1.1.2 Government Standards

UNIFIED FACILITIES CRITERIA (UFC)

UFC 1-200-01	General Building Requirements(A reference in this PTS section to UFC 1-200-01 requires compliance with the Tri-Service Core UFCs that are listed in UFGS Section 01 33 10.05 20, which includes the following significant UFC(s):UFC 3-101-01, ArchitectureUFC 3-120-10, Interior Design)

C30 1.2 QUALITY ASSURANCE

C30 1.2.1 Paint Applicatorâ€™s Qualifications

C30 1.2.1.1 SSPC QP 1 Certification

For the application of industrial coatings identified in the Project Program, all contractors and subcontractors that perform surface preparation or coating application shall be certified by the Society for Protective Coatings (formerly Steel Structures Painting Council) (SSPC) to the requirements of SSPC QP 1 prior to contract award, and shall remain certified while accomplishing any surface preparation or coating application. The painting contractors and painting subcontractors must remain so certified for the duration of the project. If a contractor's or subcontractor's certification expires, the firm will not be allowed to perform any work until the certification is reissued. Requests for extension of time for any delay to the completion of the project due to an inactive certification will not be considered and liquidated damages will apply. Notify the Contracting Officer of any change in contractor certification status.

C30 1.2.2 Aircraft Maintenance Hangar and Vehicle Maintenance Flooring Installer Qualifications

The Designer of Record shall utilize UFGS Specification Section 09 67 23.14, *Fuel Resistive Resinous Flooring, 3-Coat*to provide the required installer qualifications for the floor coating system.

C30 1.3 PERFORMANCE VERIFICATION AND ACCEPTANCE TESTING

Verification of satisfactory interior finish assemblies' performance shall be via Performance Verification Testing, as detailed in this section of the RFP.

C30 1.3.1

Provide sample of textured ceiling application for DOR approval before resuming work. Sample shall be used as a reference for remaining application.

C30 1.3.2

Provide sample of multicolor paint application for DOR approval before resuming work. Sample shall be used as a reference for remaining application.

C30 1.3.3

Provide sample of terrazzo and/ or architectural cast-in-place concrete floor application for DOR approval before resuming work. Sample shall be used as a reference for remaining application.

C30 1.4 DESIGN SUBMITTALS

Design Submittals shall be in accordance with Z10, *General Performance Technical Specifications*, UFGS section 01 33 10.05 20, *Design Submittal Procedures*, UFC 1-300-09N, *Design Procedures*and UFC 3-101-01, *Architecture*.

In addition, UFGS sections listed below or in the body of the PTS text are

to be used by the Designer of Record (DOR) as a part of the design submittal. If the UFGS products or systems are applicable to the project, the DOR shall edit these referenced UFGS sections and submit them as a part of the design submittal specification. Edit the specification sections in accordance with the limitations stated in PTS section Z10, General Performance Technical Specifications.

C30 1.5 CONSTRUCTION SUBMITTALS

Submit construction submittals in accordance with PTS section Z10, *General Performance Technical Specifications*. In addition to the Z10 requirements, the Designer of Record (DOR) shall approve the following construction submittals as a minimum:

Paint, Finish materials, Finish colors

Installation drawings for floors with carpet, tile, stone, architectural cast-in-place concrete or terrazzo to include locations and details of seams, color and material transitions, details of divider strips, control joints, and crack control solutions.

Changes shall not be made to the finishes that are submitted and approved by the Government during the design phase. In the event that revisions may be required because of unforeseen conditions such as discontinued product, the revisions must be approved by the DOR and then submitted to the Government Interior Designer for approval before substitutions can be made.

C3010 WALL FINISHES

Interior wall finishes shall be moisture and mildew resistant, easily maintained, and suitable in accordance with industry standards for the architectural surface being finished. For painted wall finishes, refer to C3040 "INTERIOR PAINTING AND SPECIAL COATINGS".

C301001 CONCRETE WALL FINISHES

C301001 1.1 SPECIAL OR ARCHITECTURAL FINISHES ON INTERIOR CONCRETE WALLS

Cast-in-place or pre-cast concrete wall finishes shall include, but are not limited to, abrasive blasted surfaces, colored surfaces, exposed aggregate, grooved surfaces, or tooled surfaces.

C301002 PLASTER WALL FINISHES

Veneer plaster shall be gypsum plaster veneer finish on gypsum base finishes, or cement plaster veneer finish on concrete or masonry. Refer to Section C3040 for paint system and gloss level.

C301002 1.1 GYPSUM PLASTER

Provide gypsum neat plaster or high strength gypsum plaster base coat conforming to ASTM C28. High strength gypsum plaster shall have a compressive strength of not less than 2,500 psi, when tested dry in accordance with ASTM C472.

C301002 1.1.1

High strength gypsum gaging plaster finish coat shall have a compressive strength of not less that 4,500 psi when tested dry in accordance with ASTM C472.

C301002 1.1.2

Provide gypsum molding plaster for ornamental plaster in accordance with ASTM C59.

C301002 1.1.3

Provide Keene's cement finish coat conforming to ASTM C61.

C301002 1.1.4

Provide acoustical gypsum plaster finish coat conforming to ASTM E1042 Type I or II Class A, noncombustible.

C301002 1.2 CEMENT PLASTER

C301002 1.2.1

Portland cement plaster base coat in accordance with ASTM C150, gray portland cement. Use Type I when no special characteristics are required, Type II when plaster and stucco will be exposed to moderate sulfate (alkali) action, Type III when early strength is needed as in cold weather, and Type V when high resistance to sulfate is required.

C301002 1.2.2

Portland cement plaster finish coat in accordance with ASTM C150, gray portland cement Type I when no special characteristics are required, Type II when plaster and stucco will be exposed to moderate sulfate (alkali) action, Type III when early strength is needed as in cold weather.

C301002 1.2.3

Factory-mixed finish coat according to the manufacturer's instructions.

C301003 GYPSUM WALLBOARD FINISHES

Conform to specifications, standards and requirements in accordance with Gypsum Association GA 214, GA 216 and GA 224. Provide asbestos free materials only. Provide Type X gypsum board in fire rated assemblies. Provide a foil back gypsum board when a vapor retarder is required.

C301003 1.1 REGULAR GYPSUM BOARD

ASTM C36/C36M and ASTM C1396/C1396M 1/2 or 5/8 inch (12.7 mm or 15.9 mm) thick in residential construction, and 5/8 inch (15.9 mm) thick in non-residential construction, tapered edges for exposed layers, square edges for concealed backer layers.

C301003 1.2 MOISTURE RESISTANT GYPSUM BOARD

ASTM C630/C630M, 1/2 or 5/8 inch (12.7 mm or 15.9 mm) thick in residential construction, and 5/8 inch (15.9 mm) thick in non-residential construction. Use in humid areas or spaces but not as a substrate in tiled areas where wall tile is exposed to direct moisture contact or condensation accumulation.

C301003 1.3 FOIL BACKED GYPSUM BOARD

ASTM C1396/C1396M 1/2 or 5/8 inch (12.7 mm or 15.9 mm) thick in residential construction, and 5/8 inch (15.9 mm) thick in non-residential construction, tapered edges for layers exposed to view, square edges for concealed layers. Seal joints in foil backing to other panels and adjoining materials as recommended by the panel manufacturer.

Alternative to foil backed gypsum board in Secured Areas: Field applied foil faced barrier material is an acceptable alternative for pre manufactured foil backed gypsum board. Provide a continuous composite multilayer barrier with a woven polyethylene sheet sandwiched between two sheets of solid reflective aluminum surfaces. Shielding effectiveness tested in accordance with IEEE 229/ ASTM D4935. Install barrier in accordance with manufactures instructions.

C301003 1.4 CEMENTITIOUS BACKING UNITS

ANSI A108.11 and ANSI A118.9, 5/8 inch (15.9 mm) thick; use as a substrate for ceramic tile in wet areas that are exposed to direct moisture contact or condensation accumulation for areas including, but not limited to, tubs, shower enclosures, saunas, steam rooms, gang shower rooms, and shower drying rooms. Provide screws specifically designed for use with cement panels.

C301003 1.5 IMPACT RESISTANT GYPSUM BOARD

Reinforced gypsum panel with imbedded fiber mesh or polycarbonate resin thermoplastic backing, 5/8 inch (15.9 mm) thick, tapered edges, in accordance with Structural Failure Test; ASTM E695 or ASTM D2394 and Indentation Test; ASTM D5420 or ASTM D1037. Provide metal framing of 20-gauge minimum. Provide fasteners that meet manufacturer requirements and specifications. Impact resistant gypsum board shall have a flame spread rating of 25 or less and a smoke developed rating of 50 or less, ASTM E84. Finish with a high strength plaster veneer. Refer to PTS C10 for further requirements on impact resistant wall construction.

C301003 1.6 JOINT TREATMENT

ASTM C475, Joint compound shall be specifically formulated and manufactured for use with and compatible with tape, substrate and fasteners as recommended by the manufacturer. Tape and finish gypsum board in accordance with ASTM C840, GA 214 and GA 216. Provide premanufactured joints at all structural expansion joints, crack control joints, and change of materials as recommended by the manufacturer and in accordance with GA 216.

C301003 1.7 FASTENERS

ASTM C514. Fasteners shall be compatible with each type of gypsum board

material as recommended by the gypsum board manufacturer and in accordance with GA 216 and GA 224.

C301003 1.8 ACCESSORIES

ASTM C1047. Fabricate from corrosion protected steel or plastic designed for intended use. Accessories manufactured with paper flanges are not acceptable. Flanges shall be free of dirt, grease, and other materials that may adversely affect bond of joint treatment. Provide prefinished or job decorated materials. For predecorated gypsum board provide prefinished metal or plastic trim to match predecorated gypsum board. Install as recommended by GA 214, GA 216 and GA 224.

C301003 1.9 LEVEL OF FINISH

C301003 1.9.1

Tape and finish gypsum board in accordance with ASTM C840, GA 214 and GA 216. Plenum areas above ceilings shall be finished to GA 214, Level 1. Water resistant gypsum backing board, ASTM C630/C630M, to receive ceramic tile shall be finished to GA 214, Level 2. Walls to receive a heavy-grade wall covering or have textured finish before painting shall be finished to GA 214 Level 3. Walls without wall wash lighting to receive paint (MPI Gloss Level 2), light textures, or wall coverings shall be finished to GA 214 Level 4. Unless otherwise specified, all gypsum board walls, partitions shall be finished to GA 214 Level 5. Provide joint, fastener depression, and corner treatment. Do not use fiberglass mesh tape with conventional drying type joint compounds; use setting or hardening type compounds only. Provide treatment for water-resistant gypsum board as recommended by the gypsum board manufacturer.

C301003 1.9.2

Wherever gypsum board is to receive eggshell (MPI Gloss Level 3), semigloss (MPI Gloss Level 5), or gloss (MPI Gloss Level 6) paint finish, finish gypsum wall surface to GA 214 Level 5.

C301003 1.9.3

Where wall wash lighting will accent the flatness of the wall and surface irregularities in gypsum board joints, provide feature edge gypsum board and two coat joint compound fillers. Provide this special joint treatment at up lighting, down lighting and horizontal lighting at the end of a passageway wall.

C301004 TILE AND TERRAZZO WALL FINISHES

C301004 1.1 CERAMIC TILE WALL SYSTEM FINISHES

Provide ceramic tile wall systems as defined in the Tile Council of America (TCA) handbook for ceramic tile installations suitable for the service requirements listed. Install systems in accordance with ANSI A108/A118 series standards. Colored grout with sealer shall be provided. Coordinate with ceramic bath accessories for modularity. Include all trim pieces, caps, stops, and returns to complete installation.

C301004 1.1.1

Ceramic Mosaic Wall Tile shall be a minimum of 1/4 inch (6 mm) thick and installed from floor to ceiling, unless otherwise noted.

C301004 1.1.2

Wall tile shall be glazed, matte glazed or unglazed finish. Refer to project program for tile type, pattern, and surface texture.

C301004 1.1.3

Porcelain wall tile shall be through color, polished or unpolished. Refer to project program for tile type, pattern, and surface texture.

C301004 1.1.4

Provide wall tile color and style selections a minimum of one grade above base grade.

C301004 1.1.5

Provide Designer accent tile, accent strips and accessory ceramic tile shapes as an integral part of the ceramic wall tile system.

C301005 WALL COVERINGS

Wall coverings shall be material designed specifically for the specified use. The wallcovering shall contain a non-mercury based anti-microbial. The wallcovering shall be the type made without the use of cadmium-based stabilizers. Wallcovering shall have a Class A flame spread rating of 0-25 and smoke development rating of 0-50 when tested in accordance with ASTM E84. The wall preparation, trimming, adhesive and application shall be according to the manufacturer’s printed directions. The manufacturer shall approve the installers in writing. The material must be easily cleaned by traditional methods such as washing, wiping, or vacuuming. Primer and adhesive shall be of a type recommended by the wallcovering manufacturer and shall contain a non-mercury based anti-microbial. Adhesive shall be strippable type. Do not apply wall coverings to the interior surface of exterior walls.

C301005 1.1 VINYL WALL COVERING

C301005 1.1.1

Vinyl wallcovering shall be a vinyl coated woven or nonwoven fabric with germicidal additives and shall conform to ASTM F793, Category V Type II, 13.1 to 22 ounces (371 g to 624 g) total weight per square yard and width of 54 inches (1370 mm). Provide ASTM F793, Category VI, Type III, 22 ounces (624 g) and above to cover rough textured walls such as masonry.

C301005 1.1.2

Provide a polyvinyl fluoride film, 0.0005 inch (0.012 mm) thick or thicker shall be factory applied to the wall covering where additional resistance to staining and soiling from exposure to staining reagents

or chemicals and resistance from abuse is required. The film shall be transparent (clear), medium gloss.

C301005 1.2 FABRIC WALL COVERING

C301005 1.2.1

Fabric wallcovering shall be woven material of Polyester or Polyolefin, or a combination of the two fibers with an acrylic backing. The face shall be treated with a soil repellent finish. The material must be a minimum of 48 inches (1219 mm) wide. "Tackable" wall covering shall be "self-healing" from tack penetration through the covering into the substrate. The material must be a minimum of 12 ounces (340 g) per square yard exclusive of backing. A tackable wall covering will not be required for smoother, less textured surface appearance.

C301005 1.2.2

Acoustical wallcovering shall be textured, woven or non-woven material of polyester or polyolefin, or a combination of the two fibers with an acrylic backing. The material must be a minimum of 48 inches (1219 mm) wide and a minimum of 16 ounces (454 g) per square yard. The material shall have an NRC rating of .15 on gypsum board in accordance with ASTM C423.

C301005 1.3 WALLCOVERING BORDER

Vinyl wallcovering border shall be a vinyl coated woven or nonwoven fabric with germicidal additives and shall conform to ASTM F793, Type I, 7 to 13 ounces (198 g to 368 g) or Type II, 13.1 to 22 ounces (371 g to 624 g) total weight per square yard.

C301005 1.4 SURFACE PREPARATION FOR UNEVEN WALLS

C301005 1.4.1

Wall liner shall be a non-woven polyester cellulose blend having a minimum weight of 3.7 ounces (105 g) per square yard and a total minimum thickness of 0.013 inches (0.33 mm). Wall liner shall have a Class A flame spread rating of 0-25 and smoke development rating of 0-50 when tested in accordance with ASTM E84. Use for masonry walls or walls with uneven surfaces.

C301005 1.4.2

For masonry or rough textured walls, use a veneer plaster finish to smooth the walls prior to wallcovering installation.

C301005 1.5 CORNER GUARDS

C301005 1.5.1

Corner guards shall be 3/32 inch (2.4 mm) thick and shall cover 1 inch (25 mm) each side of corner at right angles. Corner guards shall be clear polycarbonate. Use in executive areas, office areas, and

wall-covered areas subject to cart traffic as a minimum.

C301005 1.5.2

Corner guards shall be 3/32 inch thick and shall cover 2-1/2 inches (64 mm) each side of corner at right angles. Corner guards shall be through color polycarbonate or rubber. Use in corridors or other high traffic areas.

If protective wall components from paragraphs C301090 – 1.5 and 1.6 are provided, corner guards shall be from the same lot and color as protective wall components.

C301005 1.6 WAINSCOT CAP

C301005 1.6.1

Wainscot cap shall be satin-finished extruded aluminum approximately 3/4 inch (19 mm) high, feathered at bottom edge, with an approximate 3/16 inch (5 mm) exposed face on top edge, and grooved to receive the covering. Adhesive to install wainscot cap shall be of a type recommended by the manufacturer of the cap.

C301005 1.6.2

Wood wainscot cap shall be 3-1/2 by 3/4 inch (89 mm by 19 mm) solid hardwood, AWI Custom grade, with painted or stained finish. Profile shall be a molded shape.

C301006 ACOUSTICAL PANELS ADHERED TO WALLS

Acoustical wall treatment shall be acoustical panels, sound absorbing wall units, or acoustical wall systems. Acoustical panel system shall include manufacturer's standard concealed fasteners, splines, tracks, and other components necessary to complete the installation. Fire rating for the complete composite system shall be Class A, 200 or less smoke density and flame spread less than 25, when tested in accordance with ASTM E84.

C301006 1.1 ACOUSTICAL FABRIC COVERED WALL PANELS

C301006 1.1.1

Prefinished factory assembled wall panels shall consist of, seamless fabric covered fiberglass or mineral fiber core system. Perimeter edges shall be reinforced by an aluminum frame or a formulated resin edge hardener. Fabric covering shall be stretched free of wrinkles and then bonded to the edges and back or bonded directly to the panel face, edges, and back of panel a minimum distance standard with the manufacturer. Mounting shall be by manufacturer's standard concealed spline, mechanical fasteners, magnetic fasteners, hook and loop or adhesive mounting.

C301006 1.1.2

Stretched fabric wall panel system shall consist of continuous perimeter and butt seam mounting extrusions, site-fabricated and

applied directly to the substrate. Facing fabric shall be stretched over core materials and attached without adhesives, nails, tacks, screws or tapes so that fabric may be removed and replaced with framework in place.

C301006 1.1.3

Fabric shall be seamless, 100% polyester or olefin or a blend of the two. Light fastness (fadeometer) shall be approximately 40 hours in accordance with AATCC 16.

C301006 1.1.3.1

Non-woven, embossed texture, or needle punched 100 percent polyester, minimum 12 ounces (340 g) per linear yard. Tear strength shall be minimum 25 pounds (11.25 kg) machine direction and minimum 40 pounds (18 kg) cross-machine direction in accordance with ASTM D1117. Tensile strength shall be minimum 50 pounds (22.5 kg) machine direction and minimum 75 pounds (34 kg) cross-machine direction in accordance with ASTM D5034.

C301006 1.1.3.2

Woven, minimum 2-ply 100 percent polyester or olefin, minimum 12 ounces (340 g) per linear yard. Tear strength shall be minimum 29 pounds (13 kg). Tensile strength shall be 150 pounds (68 kg) minimum in accordance with ASTM D5034.

C301006 1.1.3.3

Perforated vinyl covering with fabric backing, minimum 20 ounces (567 g) per linear yard total weight.

C301006 1.2 ACOUSTICAL WALL PANELS

Aspen wood fibers bonded together with an inorganic hydraulic cement binder, formed in a continuous process under heat and pressure. Nominal overall panel thickness shall be 1 inch (25 mm). Noise Reduction Coefficient shall be not less than NRC 0.85 for Type C-40 and C-80 mounting.

C301090 OTHER WALL FINISHES

C301090 1.1 SOLID SURFACING WALL FINISHES

Solid surfacing material shall consist of 100% pure acrylic polymer, mineral fillers, and pigments. The material shall be homogenous, not coated or laminated, meeting ANSI Z124.3 and ANSI Z124.6 requirements. Superficial damage to a depth of 0.010 inch (.254 mm) shall be repairable by sanding or polishing. Provide manufacturer's full range of colors and patterns. Flammability, ASTM E84: Class I/A, flame spread 25 maximum; smoke developed 30 maximum.

C301090 1.1.1

If used in a shower, solid surfacing wall finishes shall extend from top of shower pan to a minimum of 84 inches (2130 mm) or to underside

of ceiling and shall surround the shower enclosure. Wall finish shall extend from top of tub to 84 inches (2130 mm) and shall surround tub shower. If used in a kitchen, solid surfacing wall finish shall extend from top of kitchen countertop to underside of wall cabinet.

C301090 1.1.2

Provide solid surfacing with factory recommended fasteners/adhesives/caulk to complete the installation.

C301090 1.2 PLASTIC LAMINATE WALL FINISHES

Plastic laminate used for wall applications shall be commercial grade, high-pressure laminate with a #60 finish, approved for vertical applications. NEMA LD 3.

C301090 1.2.1

The kitchen wall area between the counter top backsplash and the bottom of the wall cabinet shall be plastic laminate. Laminate wall finish shall include factory recommended fasteners/adhesives/caulk to complete the installation.

C301090 1.3 DECORATIVE PANELING SYSTEM

Architectural paneling system applied to interior walls shall include associated furring, fastening, and trim to complete the installation. Wood paneling system finish shall be factory or field applied.

C301090 1.4 WOOD TRIM AND DETAILING FINISHES

Decorative panels, chair rail, standing and running trim, shall be of AWI custom grade hardwood with a painted or stained finish. Refer to C3040 "INTERIOR PAINTING AND SPECIAL FINISHES" for finish system. Chair rail shall be a minimum of 3-1/2 inches (89 mm) high. Profile of chair rail shall be a molded shape. Wood trim shall include associated furring, fastening, adhesives and trim to complete the installation.

C301090 1.5 IMPACT RESISTANT PANEL OR WAINSCOT WALL FINISHES

The wall covering panel system, or wainscot, shall be an impact-resistant acrylic PVC sheet of a minimum 0.060 inch (1.5 mm) thickness in 4 foot by 8 foot (1219 mm by 2438 mm) sheets. The system shall be Class A (ASTM E84), UL listed, and chemical and stain resistant. It shall include all accessories, such as top caps, joint covers, and inside and outside corners, necessary for a complete installation. A full range of colors and textures shall be included. The wall panel system shall have coordinating color and pattern options for all components within the system. The wall panel system shall offer a 21 ounce (595 g) fabric backed vinyl wallcovering laminated to a 0.020 inch (.51 mm) rigid acrylic/PVC backing capped with 1 mil of protective film.

C301090 1.5.1

Impact Resistant Trim Finishes - Impact resistant chair or handrail system shall be a formed rigid PVC product. Chair or handrail shall

be a minimum of 3 inches (76 mm) high and be mounted with concealed hardware. Chair or handrail system shall be chemical, stain, and bacteria resistant. Chair rail shall be UL classified, conforming to NFPA Class A fire rating and ASTM D256-90b for impact strength of 30.2 ft-lbs/inch thick.

C301090 1.6 CORNER AND WALL GUARDS

Corner and wall guards shall be high-impact formed polyvinyl chloride a minimum of 0.078 inch (2 mm) with concealed mounting hardware and end closure. If used with an impact resistant panels system, the guards shall be from the same manufacturer as the impact resistant wall panel system, chair or hand rail system and shall include all accessories necessary for a complete installation. A full range of styles, colors and textures shall be included.

C3020 FLOOR FINISHES

Refer to C3040 "INTERIOR PAINTING AND SPECIAL FINISHES" for painted floor coatings.

C302001 TILE FLOOR FINISHES

Provide ceramic tile floor systems as defined in the Tile Council of America (TCA) handbook for ceramic tile installation and materials for the service requirements listed. Provide installation and materials in accordance with ANSI A108/A118 series standards, except do not use organic adhesives. Provide manufacturer’s full range of colors and styles. Tile shall be a minimum of one grade above base grade.

Mortar shall be Portland cement, ANSI A108.1A/1B/1C/ A118.1, Latex-portland cement, ANSI A108.5/A118.4 or Epoxy ANSI A108.6/A118.3.

Grout shall be factory sanded Portland cement, ANSI A108.10/A118.6, Latex-portland cement, ANSI A108.10/A118.7 or Epoxy ANSI A108.6/A118.3. Provide tile joint grout sealer on white, light colored areas that are routinely exposed to water and liquid cleaning materials, entrance areas, and areas that require a high degree of stain resistance, and as required by the manufacturer. Provide chemical resistant epoxy resin for kitchens and other areas where high resistance to staining and absorption are required, ANSI A118.3.

Slip resistant tile shall have a minimum Coefficient of Friction (wet and dry) of 0.6, ASTM C1028. Tile shall have smooth, non-slip or textured surface and a glazed or unglazed finish. Non-slip or textured surface required for tile in areas where there is excessive water or grease and oils such as kitchens, dining facilities, toilets, and in industrial and maintenance facilities.

C302001 1.1 CERAMIC GLAZED FLOOR TILES

Ceramic glazed floor tiles shall be a minimum of 5/16 inch (8 mm) thick with a minimum of 1/8 inch (3 mm) grout width with cushioned edge. Tile shall have a 0.5 to 3.0 percent water absorption rate, ASTM C373. Do not use in areas where there is excessive water or grease and oils such as kitchens, dining facilities, toilets, showers, shower drying rooms, building entrance areas, and in industrial and maintenance facilities.

C302001 1.2 CERAMIC MOSAIC UNGLAZED FLOOR TILES

Ceramic Mosaic unglazed floor tiles shall be a minimum of 1/4 inch (6 mm) thick with a maximum of 1/16 inch (1.6 mm) grout width with cushioned edge. Tile shall have less than a 0.5 percent water absorption rate, ASTM C373. Use in toilets, showers and shower drying rooms and locker rooms.

C302001 1.3 PORCELAIN FLOOR TILE

Porcelain floor tiles shall be a minimum of 5/16 inch (8 mm) thick with a maximum of 1/4 inch (6 mm) grout width with cushioned edge. Tile shall have a minimum breaking strength of 300 pounds (202 kg), ASTM C648 and a maximum absorption rate of 0.5%, ASTM C373. Use in lobbies, corridors, toilets, kitchens, dining facilities, and other areas with minimal maintenance requirements, high resistance to staining, absorption and high durability requirements. Tile shall be color through, impervious, unglazed or glazed finish with an unpolished, semi-polished, polished, or textured surface.

C302001 1.4 QUARRY FLOOR TILE

Quarry floor tiles shall be a minimum of 1/2 inch (12.7 mm) thick tiles with a maximum of 1/4 inch (6 mm) grout width. Tile shall have a minimum breaking strength of 350 pounds (158 kg), ASTM C648 and a maximum absorption rate of 3%, ASTM C373. Use in lobbies, corridors, kitchens, dining facilities, and other areas with high durability requirements. Use grout release for darker pigmented grout colors. Tile shall have a maximum of 3.0 percent water absorption rate when tested in accordance with ASTM C373. Non-slip, abrasive grain or textured surface required for tile in areas where there is excessive water or grease and oils. Tile shall consist of semi-vitreous, vitreous or clay material with smooth or textured surface and unglazed finish.

C302002 TERRAZZO FLOOR FINISHES

Refer to Project Program for special design requirements.

C302002 1.1 BONDED TERRAZZO

Provide terrazzo, bonded to concrete, consisting of a terrazzo topping over an underbed. Use in all general areas requiring terrazzo. Where structural movement is anticipated which may injure the terrazzo, use the sand cushion (floating) method. Provide cementitious terrazzo in accordance with the NTMA bonded terrazzo specification.

C302002 1.2 RESINOUS TERRAZZO

Resinous terrazzo flooring shall be an epoxy terrazzo system that conforms to the requirements specified in the NTMA resinous epoxy specification.

C302003 WOOD FLOORING

C302003 1.1 WOOD FLOORING SYSTEM

Wood strip flooring shall be 3/4 inch (19 mm) thick by 2-1/4 inches (57 mm) face width, kiln dried, continuous tongue and groove and of standard lengths. Beech and birch shall be second grade in accordance with NOFMA Grading Rules. Hard maple shall be second and better in accordance with MFMA-01. Red and white oak shall be select grade in accordance with NOFMA Grading Rules.

Strip flooring shall be marked with the trademark of the grading agency. The strip flooring shall be NOFMA certified and installed in accordance with NOFMA publication *Installing Hardwood Flooring*. Nails shall be as recommended by strip flooring manufacturer's recommendations. Resilient pads shall be pneumatic rubber, PVC, or polyurethane resilient mounts to fit the floor system. Moisture barrier shall be 6 mil minimum thickness polyethylene.

C302003 1.1.1

Rooms where wood flooring is to be installed shall have permanent heating and air conditioning installed and working or adequate arrangements for ventilation and temperature controls starting not less than 3 days prior to beginning the installation of flooring and continuing throughout the remainder of the contract period.

C302003 1.1.2

Concrete slab shall be level, steel troweled to a tolerance of 1/8 inch (3 mm) plus or minus in a 10 foot (3048mm) radius. Slab surface shall be clean, dry, and approved by wood floor manufacturer prior to start of installation.

C302003 1.1.3

Unless otherwise approved, flooring shall be laid parallel to the length of the area to be floored. Strips shall be laid with close joints, snugly driven up but providing for expansion in accordance with humidity conditions expected during the life of the flooring. End joints shall be so alternated that there will be at least two boards between end joints in the same plane and at least 6 inches between end joints in adjacent boards. Space for expansion shall be left along perimeter walls and around fixed projections through the floor surface.

C302003 1.1.4

Flooring shall be sanded to a smooth, even, uniform finish without burns in accordance with the flooring manufacturer's recommendations. The flooring shall be left clean and ready to receive the finishing materials. Refer to C3040 "INTERIOR PAINTING AND SPECIAL FINISHES" for floor finishes.

C302004 RESILIENT FLOOR FINISHES

All resilient flooring shall meet or exceed applicable ADA horizontal requirements. Each type of flooring shall be installed with recommended adhesive in accordance with the manufacturers' written instructions. Installers shall be approved by the manufacturer in writing and shall have a minimum of 3 yrs experience for each type of flooring to be installed. A minimum of 2% total quantity for each type flooring, color and pattern shall be provided and stored within each building for future replacement and patching. Provide manufacturers full line of color and pattern selections, including multi-color patterns. Use the resilient floor finishes as identified in the Project Program or as directed below.

C302004 1.1 RESILIENT SHEET FLOORING SYSTEMS

C302004 1.1.1

Resilient linoleum sheet flooring shall be made with natural raw materials including linseed oil, flour, and rosin or resin binders double calendared onto natural jute backing, ASTM F2034, Type I. Pattern and color shall extend throughout thickness of material. Gage shall be 0.10 inch (2.5 mm). Static load limit shall be 250 psi per ASTM F970. Seal linoleum using manufacturer's recommended sealer for commercial application. The manufacturer's technical representative shall review and approve each typical sample application on-site prior to resuming the installation and shall spot check each 1,196 square yards (1000 square meters) for quality control. Work shall not commence on any portion of work until the manufacturer's technical representative renders approval on site. A manufacturer's five year warranty is required.

C302004 1.1.2

Resilient rubber sheet flooring shall be commercial quality, dimensionally stable, wear resistant, firm and slip resistant with integral color. The rubber sheet flooring shall be a three-layer construction consisting of a rubber wear layer, a cushioned layer, and a polyester backing. All components of the construction shall be thoroughly vulcanized to prevent delamination. The rubber sheet flooring shall conform to ASTM F1860-98 and require no wax maintenance.

C302004 1.1.3

Resilient homogeneous vinyl sheet flooring shall be commercial quality, 0.080 inch (2.0 mm) overall nominal gauge with a minimum wear layer thickness of 0.066 inch (1.6 mm) and a minimum of 6 feet (1.83 m) wide. It shall be non-layered, non-backed and include a protective urethane finish for ease of maintenance and conform to ASTM F1303, Type II Grade 1 Class A. Seams shall be recess scribed and heat welded with patterned or solid color weld rods depending on the contractor’s design intent to camouflage, blend or accent the seam lines. Resilient homogeneous vinyl sheet flooring shall require no wax maintenance.

C302004 1.1.4

Resilient heterogeneous vinyl sheet flooring shall be commercial quality, 0.080 inch (2.0 mm) overall nominal gauge with a minimum wear layer thickness of 0.066 inch (1.6 mm) and a minimum of 6 feet (1.83 m) or 12 feet (3.6 m) wide. It shall include a protective urethane finish for ease of maintenance and conform to ASTM F1303, Type I Grade 1 Class A. Seams shall be recess scribed and heat welded with patterned or solid color weld rods depending on the contractor's design intent to camouflage, blend or accent the seam lines. Resilient heterogeneous vinyl sheet flooring shall require no wax maintenance.

C302004 1.2 RESILIENT TILE FLOORING SYSTEM

C302004 1.2.1

Resilient vinyl composition tile (VCT) shall be commercial grade, asbestos free, with a nominal overall gauge of 1/8 inch (3 mm) and a wear layer thickness of 1/8 inch (3 mm) nominal. The tile shall be manufactured in accordance with Federal Specification SS-T-312B (1), Type IV, Comp. 1, Class 2, through pattern. Tile shall be finished in accordance with manufacturer’s written instructions.

C302004 1.2.2

Resilient static dissipative vinyl composition tile (SDT) shall be of commercial grade, asbestos free, with a nominal overall gauge of 1/8-inch (3 mm) and a wear layer thickness of 1/8-inch (3 mm) nominal; with an antistatic additive. The SDT tile shall conform to ASTM F1066, Class 2 through pattern. The flooring shall be installed with recommended adhesive and accessories; and finished in accordance with the manufacturer's written instructions. Use SDT floors in computer areas or areas with sensitive electronic where the Project Program requires tile.

C302004 1.2.3

Resilient vinyl tile shall be 0.1 inch (2.5 mm) thick, with a vinyl wear layer of 0.035 inches (.9 mm) and shall be planks or square tiles. It shall include a protective urethane finish for ease of maintenance and conform to ASTM E648, Type III, Class 1 and ASTM F1700, Class III. Provide vinyl tile that are easily cleaned with off-the-shelf products. Surface finishes requiring manufacturer supplied or special order cleaning solutions are not acceptable. Vinyl tile flooring shall have a marble, granite, stone, terrazzo or wood pattern. A manufacturer's 10-year warranty is required.

C302004 1.2.4

Resilient rubber tile shall be 100% synthetic rubber with color through, slip resistance formulation, with a minimum base thickness of 0.125 inch (3.2 mm) and a minimum stud height of 0.024 inch (0.6 mm). Rubber tile shall conform to ASTM F1344, Class I and ASTM E648, Class 1. The product shall require no wax maintenance. A manufacturer's 10-year warranty is required for a raised round or square surface profile. A manufacturer's 5-year warranty is required for other surface textures with slip resistant formulation.

C302004 1.2.5

Resilient athletic rubber tile shall be 100% synthetic heavy rubber or recycled crumb rubber tile, 3/8 inch (9 mm) thick. Rubber tile shall conform to ASTM F1344 for recycled crumb rubber tile. The product shall require no wax maintenance. A manufacturer’s 2-year warranty is required. Use rubber tile flooring in weight and exercise rooms.

C302004 1.2.6

Resilient linoleum tile shall be made with natural raw materials including linseed oil, flour, and rosin or resin binders double

calendared onto synthetic jute backing, ASTM F2034, Type I. Pattern and color shall extend throughout thickness of material. Gage shall be 0.10 inch (2.5 mm). Static load limit shall be 250 psi per ASTM F970. Seal linoleum using manufacturer's recommended sealer for commercial application. The manufacturer's technical representative shall review and approve each typical sample application on-site prior to resuming the installation and shall spot check each 1,196 square yards (1000 square meters) for quality control. Work shall not commence on any portion of work until the manufacturer's technical representative renders approval on site. A manufacturer's 5-year warranty is required.

C302005 CARPETING

C302005 1.1 GENERAL

Installer(s) shall be approved by the manufacturer in writing. Carpet manufacturer shall be established and in good standing with the industry. A minimum of 5% total quantity for each color and pattern shall be provided and stored within the building for future replacement patching.

C302005 1.2 CARPET CONSTRUCTION

Provide carpet types based on Table I, "Carpet Construction Type by Facility."

TABLE I - CARPET CONSTRUCTION TYPE BY FACILITY

Facility Type	Tufted Cut Pile	Tufted Loop Pile	Tufted Cut and Loop	Tufted Tip Shear	Tufted Frieze	Woven Loop or Cut & Loop	Carpet Tile
Administrative	-	X	X	X	X	X	X
Open Plan Offices	-	X	X	X	-	X	X
Private Offices	X	X	X	X	X	X	X
Corridors	-	X	X	X	-	X	X
Conference Rooms	X	X	X	X	X	X	X
Child Care Centers	-	X	-	-	-	-	X
Family Housing	X	X	-	-	-	-	-
Bachelor Officer's Quarters	X	X	X	-	-	X	-
Bachelor Enlisted Quarters	-	X	-	-	-	X	X
Lodging Facilities	X	X	X	X	X	X	X

Training/Educational	-	X	X	-	-	X	X
Borders and insets	X	X	X	X	X	X	X

C302005 1.3 CARPET SEVERE WEAR SPECIFICATIONS

Provide carpet that complies with Table II, "Carpet Specifications for Severe Wear Classification."

TABLE II - CARPET SPECIFICATIONS FOR SEVERE WEAR CLASSIFICATION

Carpet Construction	Pile Fiber	Weight oz/SY (kg/m2) min. x.037	Pile Height in.(mm) min.	Gauge min.	Pile Density oz/cuyd (kg/m3) min.
Tufted Cut Pile	CF NYLON	32(1.18)	.175(4.45)	1/10	6600 (270)
Tufted Loop Pile	CF NYLON	26(0.82)	.120(3.05)	1/10	6600 (270)
Tufted Cut and Loop	CF NYLON	28(1.04)	.135(3.43)	1/10	7400 (303)
Tufted Tip Shear	CF NYLON	28(1.04)	.135(3.43)	1/10	7400 (303)
Tufted Frieze	CF NYLON	32(1.18)	.175(4.45)	1/10	6600 (270)
Woven Loop	CF NYLON	26(1.04)	.135(3.43)	1/8	7400 (303)
Woven Cut and Loop	CF NYLON	26(1.04)	.135(3.43)	1/8	7400 (303)

C302005 1.4 CARPET PILE FIBER

Provide one of the following:

a. 100% premium branded, yarn-dyed, Type 6.6 continuous hollow filament nylon
b. 100% premium branded, solution-dyed, Type 6 or Type 6.6 continuous hollow filament nylon
c. 100% premium branded, combination yarn died and solution-dyed, Type 6 or Type 6.6 continuous hollow filament nylon

C302005 1.5 CARPET BACKING REQUIREMENTS

a. Provide manufacturer's standard high performance carpet backing.
b. Moisture resistant carpet backing shall pass the 24 hour British Spill Test.
c. Moisture proof carpet backing shall pass the 10,000 Impacts Test.
d. Provide moisture resistant carpet backing with an attached urethane cushion, minimum 18 lb. density.
e. Provide moisture proof carpet backing with integral high density cushion of thermoplastic, urethane, or PVC.

C302005 1.6 CARPET PERFORMANCE CHARACTERISTICS

a. Flammability: Carpet shall meet the Critical Radiant Flux Classification of not less than 0.45 W/sq. cm. when tested in accordance with ASTM E648. Carpet shall generate less than 450 rating when tested in accordance with ASTM E662
b. Static Control: Carpet shall include a permanent static control system to control static build-up to less than 3.0 KV in accordance with AATCC-134.
c. Dimensional Stability: Carpet shall be permanently dimensionally stable with no delamination of components or any edge raveling or zippering.
d. Colorfastness to Crocking: Not less than 4, wet and dry, per AATCC-165.
e. Colorfastness to Light: Not less than 4 after 40 AFU (AATCC fading units) per AATCC-16.
f. Antimicrobial Activity: Not less than 0.08-inch (2-mm) halo of inhibition for gram-positive bacteria; not less than 0.04-inch (1-mm) halo of inhibition for gram-negative bacteria; no fungal growth, per AATCC-174.
g. Sustainability; Provide carpets with recycled fiber content, and renewable material content in the attached cushion or backing materials certified by an independent testing agency.
h. Written Warranty: Lifetime commercial warranty for texture retention and edge raveling, zippering, delamination is required. Seam preparation and adhesives shall be recommended by the carpet manufacturer in accordance with the warranty.
i. Appearance Retention: Provide carpet with a multi-color pattern for excellent appearance retention and soil hiding characteristics.
j. Indoor Air Quality: Provide carpets that meet the criteria of the CRI "Green Label" Indoor Air Quality Testing Program. Carpet adhesive VOC's shall be less than 50 g/L.

C302005 1.7 CARPET INSTALLATION

Install carpet by one of the following methods in accordance the manufacturer's recommendations and in accordance with the Carpet and Rug Institute, CRI-104, Standard for Installation Specification of Commercial Carpet, compatible with the construction, backing, and pattern characteristics of each carpet provided.

a. Direct Glue Down Carpet Installation
b. Double Glue Down Carpet and Pad Installation
c. Carpet with Attached-Cushion Installation
d. Preapplied releasable "dry" adhesive system installation.
e. Stretch-In Carpet Installation with tack strips and pad

C302006 MASONRY AND STONE FLOORING

C302006 1.1 UNIT MASONRY FLOORING SYSTEM

Unit masonry flooring system and coordinating base shall be fired red clay brick, or chemical resistant brick unit masonry flooring. Provide unit masonry flooring systems in accordance with the Brick Industry Association recommendations and the Tile Council of America *Handbook for Ceramic Tile Installation*.

C302006 1.2 STONE FLOOR AND BASE FINISHES

C302006 1.2.1

Natural Stone Flooring and coordinating base shall be of marble, granite, or travertine.

C302006 1.2.2

Aggregate Stone Tile and coordinating base shall be a composite of marble or granite.

C302006 1.2.3

Install stone floor and base in accordance with the recommendations of the Marble Institute of America, the Indiana Limestone Institute of America, Inc. the National Building Granite Quarries Association, Inc. in addition to the Tile Council of America *Handbook for Ceramic Tile Installation*as applicable to the type of stone being installed.

C302007 WALL BASE FINISHES

Provide a wall base for transition between floor and wall finish. If no other type of base is required, provide rubber or vinyl straight base at carpet installations, rubber or vinyl cove base at exposed concrete or resilient tile floors, and a base to match the floor material at hard surface tile floors, or as required in the project program.

C302007 1.1 RESILIENT WALL BASE FINISHES

C302007 1.1.1

All rubber wall base shall be 4 inch (100 mm) high and 1/8 inch (3.2 mm) thick as required unless indicated otherwise. The wall base shall include inside and outside corners and shall conform to ASTM F1861-98, Type TS. Provide wall base in rolls and not 4 foot lengths.

C302007 1.1.2

Flash-coved integral resilient sheet wall bases shall be installed in accordance with the manufacturers' printed instructions to include a cove stick having a minimum radius of 3/4 inch (19 mm) and finished with an approved cap strip.

C302007 1.2 CARPET WALL BASE FINISHES

Carpet wall base finishes shall consist of a strip of carpet matching or contrasting adjacent carpet, 4 inch (100 mm) high, with the top edge finished with an aluminum or vinyl edge profile; or an edge binding material matching the carpet.

C302007 1.3 WOOD BASE FINISHES

Wall base shall be a minimum of 3-1/2 inches (90 mm) high and AWI custom grade hardwood molding with mitered inside and outside corners. Refer to C302008 – 1.1.2 for wood finishes.

C302007 1.4 STONE AND MARBLE BASE FINISHES

Stone and marble wall base shall coordinate with the adjacent flooring and shall be 4 inch (89 mm) and 3/4 inch (19 mm) thick.

C302007 1.5 TILE BASE FINISHES

Coordinate tile base with ceramic wall and floor tile for color, material match and modularity. Include all pre-manufactured trim pieces, special shapes, caps, stops, and returns to provide a complete installation. Provide coordinating wall, base and floor tile for curb construction at showers.

C302008 STAIR FINISHES

C302008 1.1 RESILIENT STAIR TREADS, RISERS AND LANDINGS

Refer to C302004 for resilient landing finishes. Provide rubber risers to match treads or one piece tread/risers. Provide treads with raised patterns and visually impaired nosing inserts as required.

C302008 1.2 PORCELAIN AND STONE STAIR TREADS, RISERS AND LANDINGS

Refer to C302001 and C302006 for porcelain and stone stair finishes. Provide treads with textured surfaces or raised patterns and visually impaired nosing inserts as required.

C302008 1.3 CARPETED STAIR TREADS, RISERS AND LANDINGS

Refer to C302005 for carpeted stair finishes. Provide dense padding on treads and nosings for increased appearance retention and durability.

C302009 FLOOR TOPPINGS AND TRAFFIC MEMBRANES

Assemblies include floor toppings and membrane systems.

C302009 1.1 REFLECTIVE, CHEMICAL AND SLIP RESISTANT FLOOR SYSTEMS

C302009 1.1.1 Thin Film Floor Coating

The Designer of Record shall utilize UFGS Specification Section 09 62 50.10, *Thin Film Flooring System for Aircraft Maintenance Facilities*, for the project specification submittal and for test patch, surface preparation, and installation requirements. Use MPI Product #212 "Thin Film Flooring System for Aircraft Maintenance Facilities" for product specifications.

C302009 1.1.2 Dry Shake Floor Topping

System shall be a nonferrous, non-oxidizing metallic aggregate, dry-shake surface hardener system consisting of specially processed cementitious binder, plasticizer, and water-reducing admixtures, formulated and processed under the stringent quality control of the manufacturer. The hardener shall be proportioned and sealed in standard moisture resistant bags. The manufacturer shall guarantee their aggregate to be free of rust, corrosive materials, oil, petroleum, or other water-base materials when delivered. The manufacturer shall replace any material found to contain any such materials, or any other material, which is deemed unsatisfactory. The manufacturer shall provide a full-time technical representative, qualified in designing and adjusting concrete mixes, to assist in the application of the aggregate surface hardener system. A mono molecular surface evaporation retardant film, as recommended by ACI 305R and ACI 308R, shall be provided for use under drying conditions, due to high concrete or ambient temperatures, low humidity, high winds, and so forth. This includes heated interiors during cold weather, to aid in maintaining concrete moisture during the early placement stages of the plastic concrete. Retarder shall be certified by its manufacturer to be compatible with the surface hardener and shall be used in accordance with the manufacturer's recommendations. Curing and sealing materials and procedures shall be as recommended by the manufacturer of the aggregate surface hardener system and ASTM C309 or ASTM C1315. All installation shall be in accordance with manufacturer’s instructions. Coordinate the concrete mix design with the dry shake floor topping manufacturer to optimize bond of floor finish to slab. Spread topping mix with a mechanical spreader.

C302010 HARDENERS AND SEALERS

C302010 1.1 HARDENED AND SEALED CURE CONCRETE FLOORS

Harden and seal concrete floors in accordance with the finished floor manufacture requirements. Utilize other methods of concrete curing if the floor finish manufacturer does not recommend a chemical hardener or sealer. Concrete floors that can utilize a hardener-sealer and will be exposed to traffic shall receive a minimum of two coats of hardener-sealer curing agent for dust protection. These hardener-sealer-cured floors shall be finished with a curing agent that shall penetrate the concrete to permanently seal the floor against moisture and the penetration of contaminants. The curing agent shall be non-toxic, non-flammable, and non-combustible and shall be installed in accordance with the manufacturer’s printed instructions. The finished floor shall be dust-free.

C302010 1.2 COLORED CONCRETE FLOORS

Colored concrete floors shall include a colored pigment either applied as a topical dye; or a concrete topping with integral color pigment; or a dry shake pigment application, as required by the project program. Concrete floor shall be trowel applied in a pattern, or shall include grit for slip resistance.

C302011 RAISED ACCESS FLOORING

C302011 1.1 FLOORING SUPPORT SYSTEM

Design support system to allow for 360 degree clearance in laying out cable and cutouts for service to machines and so that panel and stringer together take up maximum of 2 inches (50 mm).

C302011 1.1.1 Pedestals, Shafts, and Caps

Provide pedestals of steel or aluminum, each capable of carrying 4,960 pounds (2250 kg) axial load without permanent deformation. Provide permanent factory applied corrosion resistant finish for pedestals made of ferrous materials. Provide base plate not less than 4 inch by 4 inch by 1/8 inches (100 mm by 100 mm by 3 mm) thick, welded to shaft of pedestal. Approved die-formed bases of equivalent load spreading capacity and bearing area may be provided in lieu of flat base plates. Provide shafts to support design loads. Provide Pedestal Caps designed to fit precisely over pedestal shafts and to interlock with panels and stringers to prevent tilting, rocking, or vibrating of panels when live load is applied. Provide pedestals with adjusting threads or other devices that will permit leveling of floor system with adjustment range of approximately 2 inches (50 mm). Provide lock nuts, set screws, or other locking devices to positively lock final pedestal vertical adjustments in place, independent of floor panels. Do not use self-tapping screws, snap type connections, or spring-action lock-nuts. All adhesives used shall be as recommended by the manufacturer.

C302011 1.1.2 Stringers

Fabricate from rolled or formed galvanized steel conforming to ASTM A591/A592M. Incorporate interlocking pedestal and stringers in pedestal stringer system, providing positive seating of panels to prevent tilting, rocking, or vibrating of panels when live load is applied. Provide stringers that can be added or removed after floor is in place. Fasten end of each stringer and mid-point of each four foot stringer positively to pedestal heads, using manufacturer's standard screws. Provide screws that are removable from top.

C302011 1.2 FLOOR PANELS

Provide interchangeable 24 inch by 24 inch (610 mm by 610 mm) square module panels capable of supporting design loads. Panels shall be of weight that can readily be removed and handled by one person using lifting tool furnished by access floor manufacturer. Panel finish surface to be Grade HW 120 high pressure plastic laminate conforming to NEMA LD. Use either factory attached carpet tile, factory attached - static dissipative grounded carpet tile or field installed carpet tile with seams overlapping the access floor grid panels or to transition areas where only part of the space is recessed for access floor.

a. Aluminum Panels - ASTM B85, SC84A, die-cast or extruded construction for rooms with MRI equipment.

b. Steel Panels - Die-formed construction. Weld flat steel top sheet to one or more formed steel stiffener sheets. Provide zinc-coating conforming

to ASTM A591/A591M, Class C, with manufacturer's standard corrosive resistant electrically conductive epoxy paint finish . Wood, plastic and other combustible products are prohibited.

c. Cementitious or Concrete Filled Formed Steel Panels Entirely non-combustible steel shell and cementitious or concrete fill, corrosive resistant inside and out. Seal cut edges in accordance with manufacturer's recommendations.

d. All panels to be manufactured in USA and individually labeled "Made in USA"

C302011 1.2.1 Gravity Held Factory Finished Panels with Bolted Stringer Understructure

Fasten end of each stringer and mid-point of each four foot stringer positively to pedestal heads, using manufacturer's standard screws. Provide corner lock system for all general office (bare for carpet tile) applications with screws that are removable from top.

C302011 1.3 GROUNDING

Ground access floor system for safety hazard and static suppression. Connection of access floor support system to building grounding electrodes is specified in another section of this RFP. Provide positive contact between components for safe, continuous electrical grounding of entire floor system. Total system resistance from wearing surface of floor to building grounding electrode shall be within the range of 0.5 megohms to 20,000 megohms for computer rooms, electronics offices, data centers and control rooms, 0.2 megohms to 2.0 megohms for clean rooms and laboratories.

C302011 1.4 THRESHOLD(S)

Provide interior thresholds of nonferrous materials where flooring materials or floor levels change.

C302011 1.5 RAMPS

Provide ramps of required slip resistance and slope conforming to ATBCB ADA Title III.

C302011 1.6 INSTALLATION

Install access floor system and accessories under supervision of the access flooring manufacturers authorized representative to insure rigid, firm installation free of vibration, rocking, rattle, squeaks, and other unacceptable performance. Install in accordance with the following;

a. Set pedestal in adhesive as recommended by the access flooring manufacturer to provide full bearing of the pedestal base on the sub floor.
b. Layout floor panel installation to keep the number of cut panels at the floor perimeter at a minimum. Scribe panel assemblies at the perimeter to provide a clase fir with no voids greater than 1/18" where panels abut vertical surfaces. At spaces where access floor connects to the walls provide connection detail that seals the access floor

to the wall to reduce air leakage.

c. Secure grid member to pedestal heads in accordance with access floor manufacturers instructions.

d. Thoroughly clean up dust, dirt and construction debris caused by floor installation.

e. Level installed access floor to within 0.060" of true level over the entire area and within 0.10" in any 10" distance.

C3030 CEILING FINISHES

Refer to C3040 "INTERIOR PAINTING AND SPECIAL COATINGS" for painted ceiling finishes.

C303001 ACOUSTICAL CEILING TILES AND PANELS

C303001 1.1 ACOUSTICAL CEILING PANELS

All acoustical ceiling panels shall be 24 inch by 24 inch (610 mm by 610 mm), with a minimum light reflectance of .75 (except as noted), Class A, flame spread 25 or less and smoke development of 50 or less, ASTM E84. All acoustical ceiling panels shall have minimum 60% recycled content except as noted. Acoustical ceiling panels shall conform to ASTM E1264. Provide square edge except as noted.

C303001 1.1.1

For typical open office areas, conference rooms, executive offices, provide non-asbestos mineral composition acoustical ceiling panels of Type III with factory-applied standard washable painted finish or Type IV with factory-applied plastic membrane-faced vinyl, Form: 1, 2, or 3. Provide reveal edge in lobbies, conference rooms and command suites; otherwise, provide square edge in all other locations to receive acoustical panels.

C303001 1.1.2

For typical humid areas such as toilets, kitchens, fitness and locker rooms, provide non-asbestos mineral or glass composition acoustical ceiling panels bonded with ceramic, moisture resistant thermo-setting resin, or other moisture resistant material with factory-applied standard washable painted finish; and recycled content: minimum of 40%.

C303001 1.1.3

For areas with very high humidity, heavy soiling, staining, impact abrasion, or limited security concerns, such as bachelor's quarters, laundry rooms, or maintenance shops, provide Type V, Steel or Type VII, aluminum faces with white baked on enamel finish, and non-asbestos mineral composition absorbent backing.

C303001 1.1.4

For areas requiring a concealed grid system, provide non-asbestos mineral composition acoustical ceiling panels of Type III with factory-applied standard washable painted finish or Type IV with

factory-applied plastic membrane-faced vinyl, Form: 1, 2, or 3; Size: 12 inch by 12 inch by 5/8 inch (305 mm by 305 mm by 19 mm), Edge: for concealed grid installation.

C303001 1.1.5

Provide NRC and CAC ratings as follows:

Type of space	Minimum NRC	Minimum CAC
Open Office Areas	.75	40-44
Conference Rooms, Classrooms	.60	35-39
Activity spaces, Lobbies, Corridors	.60	35-39
Executive offices	.60	35-39
Toilets	.50	35-39
Kitchens	.50	35-39
Fitness/Locker Rms	.50	35-39
All other spaces	.50	35-39

Base the tested NRC value on Mounting Type E-400 of ASTM E795.

C303002 GYPSUM WALLBOARD CEILING FINISHES

Conform to specifications, standards and requirements in accordance with Gypsum Association GA 214, GA 216 and GA 224. Provide asbestos free materials only. Provide featured edge gypsum board on all gypsum surfaces that flatness of joints will be visible, such as uplighted ceilings, window lighted ceilings, and as recommended by the manufacturer. Provide Type X gypsum board in fire rated assemblies.

C303002 1.1 REGULAR GYPSUM BOARD

ASTM C36/C36M and ASTM C1396/C1396M, 1/2 or 5/8 inch(12.7 mm or 15.9 mm) thick, tapered edge. Provide 5/8 inch (15.9 mm) for all projects except for single family residential, which may utilize 1/2 inch (12.7 mm) if other requirements, such as sound control, are met.

C303002 1.2 MOISTURE RESISTANT GYPSUM BOARD

ASTM C630/C630M, 1/2 or 5/8 inch (12.7 mm or 15.9 mm) thick, tapered edges. Use for ceilings in humid areas. Do not use as a substrate in tiled areas where tile will be exposed to direct moisture contact or condensation accumulation. Support moisture resistant gypsum board at 12 inches (305 mm) on center. Provide 1/2 inch (12.7 mm) for single-family residential projects only. Provide 5/8 inch (15.9 mm) for all other projects.

C303002 1.3 FOIL BACKED GYPSUM BOARD

ASTM C1396/C1396M 1/2 or 5/8 inch (12.7 mm or 15.9 mm) thick in residential construction, and 5/8 inch (15.9 mm) thick in non-residential construction, tapered edges for layers exposed to view, square edges for concealed layers. Seal joints in foil backing to other panels and adjoining materials as recommended by the panel manufacturer.

Alternative to foil backed gypsum board in Secured Areas: Field applied foil faced barrier material is an acceptable alternative for pre manufactured foil backed gypsum board. Provide a continuous composite multilayer barrier with a woven polyethylene sheet sandwiched between two sheets of solid reflective aluminum surfaces. Shielding effectiveness tested in accordance with IEEE 229/ ASTM D4935. Install barrier in accordance with manufactures instructions

C303002 1.4 CEMENTITIOUS BACKING UNITS

ANSI A108.11 and ANSI A118.9, 1/2 or 5/8 inch (12.7 mm or 15.9 mm) thick; use for adhesive applied ceramic tile in wet areas (tubs, shower enclosures, saunas, steam rooms, gang shower rooms, or for shower areas with a veneer plaster finish. Support cementitious backing units at 12 inches (305 mm) on center. Provide screws specifically designed for use with cement panels.

C303002 1.5 IMPACT RESISTANT GYPSUM BOARD

Reinforced gypsum panel with imbedded fiber mesh or polycarbonate resin thermoplastic backing, 5/8 inch (15.9mm) thick, tapered edges, in accordance with Structural Failure Test; ASTM E695 or ASTM D2394 and Indentation Test; ASTM D5420 or ASTM D1037. For use whenever gypsum board partitions are allowed for barracks, training facilities, and industrial facilities. Provide metal framing of 20-gauge minimum. Provide fasteners that meet manufacturer requirements and specifications. Impact resistant gypsum board shall have a flame spread rating of 25 or less and a smoke developed rating of 50 or less, ASTM E84. Finish with a high strength veneer plaster.

C303002 1.6 TEXTURED CEILING FINISH SYSTEM

Applied textured ceiling finish shall be plaster based. Refer to paragraph "C301002 – 1.1 GYPSUM PLASTER" for finish requirements.

C303002 1.7 JOINT TREATMENT

ASTM C475, Joint compound shall be specifically formulated and manufactured for use with and compatible with tape, substrate and fasteners as recommended by the manufacturer. Tape and finish gypsum board in accordance with ASTM C840, GA 214 and GA 216. Provide premanufactured joints at all structural expansion joints, crack control joints, and change of materials as

recommended by the manufacturer and in accordance with GA 216.

C303002 1.8 FASTENERS

ASTM C514, Fasteners shall be compatible with each type of gypsum board material as recommended by the gypsum board manufacturer and in accordance with GA 216 and GA 224.

C303002 1.9 ACCESSORIES

ASTM C1047, Fabricate from corrosion protected steel or plastic designed for intended use. Accessories manufactured with paper flanges are not acceptable. Flanges shall be free of dirt, grease, and other materials that may adversely affect bond of joint treatment. Provide prefinished or job decorated materials. Install as recommended by GA 214, GA 216 and GA 224.

C303002 1.10 LEVEL OF FINISH

C303002 1.10.1

Tape and finish gypsum board in accordance with ASTM C840, GA 214 and GA 216. Ceilings to receive a heavy-grade wall covering or heavy textured finish before painting shall be finished to GA 214, Level 3. Ceilings without critical lighting to receive flat paints, light textures, or wall coverings shall be finished to GA 214, Level 4. Unless otherwise specified, all gypsum board walls, partitions and ceilings shall be finished to GA 214, Level 5. Provide joint, fastener depression, and corner treatment. Do not use fiberglass mesh tape with conventional drying type joint compounds; use setting or hardening type compounds only. Provide treatment for water-resistant gypsum board as recommended by the gypsum board manufacturer.

C303002 1.10.2

Wherever gypsum board is to receive eggshell, semigloss or gloss paint finish, or where severe, up or down lighting conditions occur, finish gypsum wall surface to GA 214 Level 5. In accordance with GA 214 Level 5, apply a thin skim coat of joint compound to the entire gypsum board surface, after the two-coat joint and fastener treatment is complete and dry.

C303003 PLASTER CEILING FINISHES

C303003 1.1 VENEER PLASTER CEILING FINISHES SYSTEM

Veneer plaster ceilings shall be gypsum plaster veneer finish to gypsum base finishes. Refer to Section C3040 for paint system and gloss level. Provide gypsum neat plaster, gypsum ready-mixed plaster, or high strength gypsum plaster base coat conforming to ASTM C28. High strength gypsum plaster shall have a compressive strength of not less than 2,500 psi, when tested dry in accordance with ASTM C472.

C303004 WOOD CEILINGS

Not Used.

C303005 SUSPENSION SYSTEMS

C303005 1.1 EXPOSED SUSPENDED ACOUSTICAL CEILING GRID

Provide 24 inch by 24 inch (610 mm by 610 mm) aluminum or steel non-corroding intermediate-duty standard grid system for lay-in acoustical panels (ASTM C635). Finish shall be factory applied white baked enamel. Provide manufacturer's hold down clips for fire rated assemblies and wall or edge molding. Hang grid system as recommended by manufacturer but with no less than 0.106 inch (2.7 mm) diameter wires (ASTM A641A, A641M, Class 1), or with one by 3/16 inch (4.76 mm) galvanized steel straps conforming to ASTM A653A, A653M (for light commercial zinc coating) or ASTM A366A, A366M (with an electrodeposited zinc coating, Type RS). Use ASTM A580/A580M, composition 302 or 304, condition annealed stainless steel, 0.106 inches (2.7 mm) in diameter over high humidity areas such as commercial kitchens and pools. Install suspended grid system with acoustical sealant (ASTM C843, nonstaining and ASTM C636). Recycled content shall be a minimum of 25%.

C303005 1.2 CONCEALED SUSPENDED ACOUSTICAL CEILING GRID

Provide 12 inch by 12 inch (305 mm by 305 mm) aluminum or steel non-corroding intermediate-duty concealed grid system for lay-in acoustical panels (ASTM C635). Finish shall be factory applied white baked enamel. Provide manufacturer’s wall or edge molding. Hang grid system as recommended by manufacturer but no less than with 0.106 inch (2.7 mm) diameter wires (ASTM A641A, A641M, Class 1), or with one by 3/16 inch (4.76mm) galvanized steel straps conforming to ASTM A653A, A653M (for light commercial zinc coating) or ASTM A366A, A366M (with an electrodeposited zinc coating, Type RS). Install suspended grid system with acoustical sealant (ASTM C843, nonstaining) and in accordance with ASTM C636. Recycled content shall be a minimum of 25%.

C303005 1.3 SUSPENDED AND FURRED CEILING SYSTEMS

ASTM C841 (for lath); ASTM C645 (for GWB).

Provide steel materials for metal support systems with galvanized coating per ASTM A653/A653M, G60; aluminum coating ASTM A463/A463M, T1-25; or a 55% aluminum-zinc coating. Provide suspended ceiling framing in accordance with ASTM C754, except framing members shall be 16 inches (400mm) unless otherwise noted.

C303006 METAL STRIP CEILINGS

Not Used.

C303090 OTHER CEILING AND CEILING FINISHES

C3040 INTERIOR COATINGS AND SPECIAL FINISHES

The following coatings are applied directly to all surfaces of interior construction.

C304001 GENERAL REQUIREMENTS

All paint shall be suitable in accordance with the Master Painter Institute (MPI)

standards for the interior architectural surface being finished. The current MPI, "Approved Product List" as of the date of contract award, will be used to determine compliance with the submittal requirements of this specification. The Contractor may choose to use a more current MPI "Approved Product List"; however, only one list may be used for the entire contract. All coats on a particular substrate, or a paint system, must be from a single manufacturer. No variation from the MPI Approved Products List is acceptable.

Paints and coatings shall comply with Master Painters Institute Green Performance Standard GPS-1-08 which is available at the following website; http://www.specifygreen.com/EvrPerf/EnvironmentalPerformance.html . Provide Interior flat intermediate and topcoats of a maximum of 50 g/L VOC and interior non-flat intermediate and topcoats of a maximum 150 g/L VOC. Choose paints that provide performance and are environmentally friendly by using LEED VOC Budgeting to analyze the total impact of all flat, non-flat and special purpose coatings on the project.

MPI paint systems identified in the RFP take precedence over other avilable MPI systems. The RFP does not identify all paint system applicable to all painting of the facility, therefore utilize the *MPI Architectural Painting, Interior Systems Manual*to identify other appropiate paint systems for the project. Utilize the "Premium Grade" systems and comply with all limitations stated in the MPI "Approved Product List" for each paint product. Products having an MPI EPR 3 rating shall be given preferential consideration over lower EPR ratings. Use higher performing paint systems unless the lower performing paint system can be justified based on a lifecycle cost to include surface preparation, application, disposal, environmental impact, and required recoating cycles. Only use paint products that have been tested for MPI’S "DETAILED PERFORMANCE". Do not use products that have been tested for "INTENDED USE".

C304001 1.1 MPI GLOSS LEVELS

Gloss levels shall comply with the MPI system of determining gloss as defined in the Evaluation sections of the MPI Manuals. Utilize the performance characteristics of the paint gloss and sheen to categorize paint rather than manufactures' description of his product.

The MPI Gloss Levels are indicated by the notation G1, G2, G3, G4, G5, G6, or G7. Use G2 "Velvet-like" Flat for ceilings, residential walls away from human contact and low traffic areas. Use G3 "Eggshell-like" in high traffic areas for ceilings and walls, when human contact with the wall is limited, and for dark accent colors. Use G5 Semigloss for ceilings, walls, doors and trim for high durability and clean ability when a surface is expected to have human contact and is routinely touched. Use G6 Gloss only in special situations such as for piping identification or special effects. The MPI Gloss and Sheen Standard values are measured per ASTM D523, method D and are as follows:

Gloss Level Number	Gloss@ 60 Degrees	Sheen@85 Degrees
Gloss Level 1(G1) – Matte or Flat	Max.5 units	Max.10 units
Gloss Level 2(G2) – "Velvet-like" Flat	Max. 10 units	10-35 units
Gloss Level 3(G3) – "Eggshell-like"	Max. 10-25 units	10-35 units
Gloss Level 4(G4) - "Satin-like"	Max. 20-35 units	Min. 35 units
Gloss Level 5(G5) - Semi-Gloss	35-70 units	
Gloss Level 6(G6) – Gloss	70-85 units	

Gloss Level 7(G7) – High Gloss More than 85 units

C304001 1.2 MPI SYSTEM DESIGNATIONS AND ABBREVIATIONS

The MPI coating system number in each Division is found in either the *MPI Architectural Painting Specification Manual*or the *Maintenance Repainting Manual*and defined as an interior system (INT/RIN).

a. INT designates an interior coating system for new surfaces.
b. RIN designates an interior coating system used in repainting projects or over existing coating systems.
c. DSD – the MPI short-term designation for Degree of Surface Degradation as defined in the Assessment sections in the *MPI Maintenance Repainting Manual*. Degree of Surface Degradation designates the MPI Standard for description and appearance of existing condition of surfaces to be painted. This DSD classification is used to determine the proper surface preparation necessary for painting.
d. DFT – The short-term designation for dry film thickness. DFT is the minimum acceptable depth or thickness of a coating or system in the dry state. The maximum acceptable DFT is not more than 50% greater than the minimum acceptable DFT (example... DFT = 2 mils, maximum DFT = 3 mils). The DFT indicated in the paint systems below relate to new coatings - MPI INT. MPI RIN will be less than the indicated DFT.
e. Paint System Abbreviations: BF - Block Filler; C – Clear coat; P – Primer coat; I – Intermediate coat; T – Topcoat.

C304001 1.3 SURFACE PREPARATION

Comply with the "Interior Surface Preparation" section of the *MPI Architectural Painting Specification Manual*or the "Interior Surface Preparation" section of the *MPI Maintenance Repainting Manual*. All suggestive language such as "may" or "should" are deleted from the standard and "must" or "shall" inserted in its place. Suggestive language such as "recommended" or "advisable" is deleted from the standard and "require" or 'required" inserted in its place. The results of these wording substitutions change this document to required procedures. For surface preparation, determine a MPI DSD Assessment of each surface and comply with the MPI Surface Preparation Requirements relating to the assessments. Notwithstanding MPI requirements, clean interior ferrous metal to a SSPC SP 10 level (near white) that have aggressive chemical environments (SSPC Zones 3A, 3B, 3C, 3D, and 3E) or waterfront exposure to open structures (SSPC Zones 2A or 2B). Examples of these types of facilities are indoor water training facilities, indoor swimming pools, and open or mostly open waterfront maintenance buildings/ waterfront warehouses/ canopies.

C304002 CONCRETE FINISHES

C304002 1.1

New and uncoated existing vertical concrete surfaces and underside of mezzanines/ stairs, and previously painted concrete surfaces:

a. High Performance Architectural Latex, System DFT: 4 mils

1) MPI INT 3.1C-G2/RIN 3.1J-G2 (Flat); P: MPI 3, I: MPI 138, T: MPI 138

2) MPI INT 3.1C-G3/RIN 3.1J-G3 (Eggshell-like); P: MPI 3, I: MPI 139, T: MPI 139

3) MPI INT 3.1C-G5/RIN 3.1J-G5 (Semigloss); P: MPI 3, I: MPI 141, T: MPI 141

b. Institutional Low Odor / Low VOC Latex (for repaint of existing occupied spaces), System DFT: 4 mils

1) MPI RIN 3.1L-G3 (Eggshell-like); P: MPI 3, I: MPI 145, T: MPI 145

2) MPI RIN 3.1L-G5 (Semigloss); P: MPI 3, I: MPI 147, T: MPI 147

C304002 1.2

New and uncoated existing and Existing, previously painted Concrete surfaces in toilets, food-preparation, food-serving, restrooms, laundry areas, shower areas, areas requiring a high degree of sanitation, and other high humidity areas unless otherwise specified, (Fill all holes in masonry surface):

- Epoxy, System DFT: 4 mils

1) MPI INT 3.1P-G3/4 /RIN 3.1E-G3/4 (Low gloss); P: MPI 108, I: MPI N/A, T: MPI 108

2) MPI INT 3.1Q-G6 /RIN 3.1E-G6 (Gloss); P: MPI 108, I: MPI N/A, T: MPI 98

C304002 1.3

New and uncoated existing concrete floors:

a. Latex Floor Paint (Not for heavy foot traffic or vehicular traffic - only use as recommended by MPI's Evaluation of Interior Systems for Architectural Painting), MPI INT/RIN 3.2A-G2 (Flat); System DFT: 5 mils, P: MPI 60, I: MPI 60, T: MPI 60

b. Epoxy (not for vehicular traffic), DFT: 5 mils

1) MPI INT 3.2L-G3/4 (Low gloss), System , P: MPI 108, I: N/A, T: MPI 108

2) MPI INT 3.2M-G6 (Gloss), P: MPI 108, I: N/A, T: MPI 98 (Add slip resistant additive),

C304003 CONCRETE MASONRY FINISHES

C304003 1.1

New and uncoated Existing Concrete masonry (not for profiled/split faced block):

a. High Performance Architectural Latex, System DFT: 11 mils

1) MPI INT 4.2D-G2 (Flat); BF: MPI 4, P: N/A, I: MPI 138, T: MPI 138

2) MPI INT 4.2D-G3 (Eggshell-like); BF: MPI 4, P: N/A, I: MPI 139, T: MPI 139

3) MPI INT 4.2D-G5 (Semigloss); BF: MPI 4, P: N/A, I: MPI 141, T: MPI 141

b. Multi-color, MPI INT 4.2H, BF: MPI 4, P: MPI 125, I: MPI 112, T: MPI 112, C: MPI 121

C304003 1.2

Existing, previously painted Concrete masonry:

a. High Performance Architectural Latex, System DFT: 4.5 mils

1) MPI RIN 4.2K-G2 (Flat); Spot Prime: MPI 138/ Full Prime: MPI 50 (for DSD 3 existing conditions), I: MPI 138, T: MPI 138

2) MPI RIN 4.2K-G3 (Eggshell-like); Spot Prime: MPI 139/ Full Prime: MPI 50 (for DSD 3 existing conditions), I: MPI 139, T: MPI 139

3) MPI RIN 4.2K-G5 (Semigloss); Spot Prime: MPI 141/ Full Prime: MPI 50 (for DSD 3 existing conditions), I: MPI 141, T: MPI 141

b. Institutional Low Odor / Low VOC Latex (for repaint of existing occupied spaces), System DFT: 4 mils

1) MPI RIN 4.2L-G3 (Eggshell-like); Spot Prime: MPI 145/ Full Prime: MPI 50 (for DSD 3 existing conditions), I: MPI 145, T: MPI 145

2) MPI RIN 4.2L-G5 (Semigloss); Spot Prime: MPI 147/ Full Prime: MPI 50 (for DSD 3 existing conditions), I: MPI 147, T: MPI 147

c. Multi-color, MPI RIN 4.2E; Spot Prime: MPI 125, I: MPI 112, T: MPI 112, C: MPI 121

C304003 1.3

New and uncoated Existing Concrete masonry units in toilets, food-preparation, food-serving, restrooms, laundry areas, shower areas, areas requiring a high degree of sanitation, and other high humidity areas unless otherwise specified, (Patch imperfections and fill all masonry surface voids with block filler):

1. Epoxy, System DFT: 10 mils

1) MPI INT 4.2R-G3/4 (Low gloss); BF: MPI 116, P: 108, I: N/A, T: MPI 108

2) MPI INT 4.2S-G6 (Gloss); BF: MPI 116, P: 108, I: N/A, T: MPI 98

C304003 1.4

Existing, previously painted, concrete masonry units in toilets, food-preparation, food-serving, restrooms, laundry areas, shower areas, areas requiring a high degree of sanitation, and other high humidity areas unless otherwise specified (Patch imperfections and fill all masonry surface voids with block filler):

a. Epoxy, System DFT: 5 mils;

1) MPI RIN 4.2R-G3/4 (Low gloss); Spot prime: MPI 108, I: N/A, T: MPI 108

2) MPI RIN 4.2S-G6 (Gloss); Spot prime: MPI 98, I: N/A, T: MPI 98

C304004 METAL FINISHES

C304004 1.1

New steel/ferrous surfaces not otherwise specified:

a. High Performance Architectural Latex, System DFT: 5 mils

1) MPI INT 5.1R-G3 (Eggshell-like); P: MPI 79, I: MPI 139, T: MPI 139

2) MPI INT 5.1R-G5 (Semigloss); P: MPI 79, I: MPI 141, T: MPI 141

C304004 1.2

New and Existing, previously painted steel/ferrous surfaces in toilet, food preparation, food serving, restrooms, shower areas and areas requiring a high degree of sanitation and other high humidity areas not otherwise specified except floors, hot metal surfaces, and new prefinished equipment:

a. Epoxy, System DFT: 10 mils

1) MPI INT 5.1Y/ RIN 5.1Y-G5 (Semigloss); P: MPI 101, I: MPI 108, T: MPI 108

2) MPI INT 5.1Z/ RIN 5.1Z-G5 (Semigloss); P: MPI 101, I: MPI 98, T: MPI 98

C304004 1.3

New and Existing, previously painted miscellaneous non-ferrous (non-hand contact aluminum and copper) surfaces not otherwise specified:

a. High Performance Architectural Latex, System . MPI INT 5.4F-G5 (Semigloss), DFT: 5 mils; P: MPI 95, I: MPI 141, T: MPI 141

C304004 1.4

New and existing unpainted galvanized doors not otherwise specified:

a. Epoxy, System, MPI INT 5.3D-G6 (Gloss); P: MPI 101, I: MPI 77, T: MPI 77

C304004 1.5

Existing Previously painted galvanized doors:

a. High Performance Architectural Latex, System DFT 5 mils MPI RIN 5.3J-G5 (Semigloss); P: MPI 134, I: MPI 141, T: MPI 141

C304005 INTERIOR WOOD FINISHES

C304005 1.1

New and Existing, uncoated wood and plywood not otherwise specified:

a. High Performance Architectural Latex, System DFT: 4.5 mils

1) MPI INT 6.4S-G4 (Satin-like); P: MPI 39, I: MPI 140, T: MPI 140

2) MPI INT 6.4S-G5 (Semigloss); P: MPI 39, I: MPI 141, T: MPI 141

C304005 1.2

Existing, previously painted wood and plywood not otherwise specified:

a. High Performance Architectural Latex, System DFT: 4.5 mils

1) MPI RIN 6.4B-G4 (Satin-like); P: MPI 46, I: MPI 140, T: MPI 140

2) MPI RIN 6.4B-G5 (Semigloss); P: MPI 46, I: MPI 141, T: MPI 141

b. Institutional Low Odor / Low VOC Latex (for repaint of existing occupied spaces), System DFT: 4 mils

1) MPI RIN 6.4D -G4 (Satin-like); P: MPI 39, I: MPI 146, T: MPI 146

2) MPI RIN 6.4D-G5 (Semigloss); P: MPI 39, I: MPI 147, T: MPI 147

C304005 1.3

New and Existing, previously finished or stained wood and plywood, except floors; natural or stained finish:

a. Natural finish, oil-modified urethane, System DFT: 4 mils, MPI INT 6.4J-G5/ RIN 6.4L-G5 (Semigloss); P: MPI 74, I: MPI 74, T: MPI 74

b. Stained, oil-modified urethane, System DFT: 4 mils, MPI INT 6.4E-G5/ RIN 6.4G-G5 (Semigloss); P: MPI 90, I: MPI 74, T: MPI 74

C304005 1.4

New and Existing, previously finished or stained wood floors; natural or stained finish:

a. Natural finish, oil-modified urethane, System DFT: 4 mils, MPI INT/RIN 6.5C-G6 (Gloss); P: MPI 56, I: MPI 56, T: MPI 56

b. Stained, oil-modified urethane, System DFT: 4 mils, MPI INT/RIN 6.5B-G6 (Gloss); P: MPI 90, I: MPI 56, T: MPI 56

C304005 1.5

New and Existing, uncoated wood surfaces in toilets, food-preparation, food-serving, restrooms, laundry areas, shower areas, areas requiring a high degree of sanitation, and other high humidity areas not otherwise specified:

a. Epoxy, System DFT: 5 mils, MPI INT 6.3L-G5 (Semigloss); P: MPI 77, I: MPI 77, T: MPI 77

C304005 1.6

New and existing uncoated wood doors:

a. Alkyd, System DFT: 4.5 mils,

1) MPI INT 6.3B-G5 (Semigloss); P: MPI 45, I: MPI 47, T: MPI 47

C304006 GYPSUM WALL BOARD FINISHES

C304006 1.1

New and Existing, previously painted Gypsum Wallboard not otherwise specified (interior gypsum finish of exterior wall):

a. High Performance Architectural Latex, System DFT: 4 mils

1) MPI INT/RIN 9.2B-G2 (Flat); P: MPI 50, I: MPI 138, T: MPI 138

2) MPI INT/RIN 9.2B-G3 (Eggshell-like); P: MPI 50, I: MPI 139, T: MPI 139

3) MPI INT/RIN 9.2B-G5 (Semigloss); P: MPI 50, I: MPI 141, T: MPI 141

b. Institutional Low Odor / Low VOC Latex (for repaint of existing occupied spaces), System DFT: 4 mils

1) MPI RIN 9.2M-G3 (Eggshell-like); P: MPI 50, I: MPI 145, T: MPI 145

2) MPI RIN 9.2M-G4 (Satin-like); P: MPI 50, I: MPI 146, T: MPI 146

3) MPI RIN 9.2M-G5 (Semigloss); P: MPI 50, I: MPI 147, T: MPI 147

c. Multi-color, MPI INT9.2G; P: MPI 125, I: MPI 112, T: MPI 112, Clear Coat: MPI 121

C304006 1.2

New and Existing, previously painted Gypsum Wallboard in toilets, food-preparation, food-serving, restrooms, laundry areas, shower areas, areas requiring a high degree of sanitation, and other high humidity areas not otherwise specified:

a. Epoxy, Use for high humidity areas requiring easy cleaning enamel finishes. System DFT: 4 mils,

1) MPI INT 9.2N-G3/4 / MPI RIN 9.2N-G3/4 (Low gloss) P: MPI 50, I: MPI 108, T: MPI 108

2) MPI INT 9.2P-G6 / MPI RIN 9.2P-G6 (Gloss) P: MPI 50, I: MPI 98, T: MPI 98

C304007 SPECIAL COATINGS TO WALLS

C304007 1.1 HIGH PERFORMANCE ARCHITECTURAL COATING (HIPAC)

HIPAC shall be a durable, organic system applied to a continuous (seamless) high-build film and cure to a hard glaze finish. They shall be resistant to continuous heat and humidity, abrasion, staining, chemicals, and biological growth. Coating shall be installed as a complete system, and as recommended by the manufacturer and have a flame spread index of not more than 25 and a smoke developed index of not more than 50 when tested in accordance with ASTM E84.

C304007 1.1.1

Two-component, epoxy-polyamide shall be chemical and corrosion-resistant, adhesive, alkali-resistant, and water-tolerant for metal, wood, concrete, masonry surfaces, and painted surfaces where high gloss or glaze type finish, extreme workability and resistance to abrasion and stains is required. Minimum dry film thickness is 3 mils for each of two coats. Furnish Gloss or Semigloss finish. Maximum volatile organic compounds (VOC) shall be 340 grams/liter.

C304007 1.1.2

Single Component, Moisture-Curing Urethane shall be a flexible, abrasion- and impact-resistant, use for floors, walls, machinery, equipment and other surfaces where good abrasion resistance, color retention, gloss retention, graffiti resistance and good resistance to acids, alkalis, solvents, strong cleaners and sanitizers, fuel and chemicals are necessary. Can also be used on concrete floors, brick and masonry surfaces (properly conditioned), metals (properly primed), and wood (properly prepared and sealed.) Minimum dry film thickness is 3 mils for each of 3 coats. Use Type I, Aliphatic, for exterior use except for oily or resinous exterior wood surfaces. Use Type II, Aromatic, for interior use.

C304007 1.2 IMPACT RESISTANT WALL FINISHES

Provide textured acrylic architectural coating system: a seamless textured acrylic water-based coating system, having a thickness of at least 20 mils, on surfaces scheduled to receive it. System shall be composed of pure acrylic polymers, silica dioxide, ethylene dioxide and pigments. System shall have a Barcoll Hardness Index of 35.0 or greater, a flame spread of 8.5 or less as determined by ASTM E84, smoke contribution of 7.0 or less, and have water vapor permeability of 27.5 English Perms or greater when tested in accordance with ASTM E96. (MPI 42)

Finish may only be installed by factory-qualified applicators in accordance with the manufacturer's printed instructions and recommendations, to fulfill warranty requirements. All coating system components shall be products of the same manufacturer. A minimum of one sample wall application shall be provided. Upon approval of the sample wall by the project manager, the application shall serve as a standard for the remaining work. The manufacturer's certified representative shall provide an on-site training demonstration of the application and care of the finish for the end-user's facility manager or other representative.

-- End of Section --

SECTION D10

CONVEYING
08/12

D10 GENERAL

RFP Part 3 including the Engineering System Requirements (ESR) provide project specific requirements. The RFP Part 4, Performance Technical Sections (PTS) provide generalized technical requirements that apply to multiple facility types and include more requirements than are applicable to any one project. Therefore, only the RFP Part 4 requirements that apply to the project and further define the RFP Part 3 project specific requirements are required.

Comply with the requirements of UFC 1-200-01, *General Building Requirements*.

D10 1.1 DESIGN GUIDANCE

Provide the design and installation in accordance with the following references. This Performance Technical Specification (PTS) adds clarification to the fundamental requirements contained in the following Government Standards. The general requirements of this PTS section are located in PTS Section Z10, *General Performance Technical Specification*.

Industry standards, codes, and Government standards referenced in the section text that are **not** found in the Unified Master Reference List (UMRL) in the Construction Criteria Base (CCB) at the Whole Building Design Guide Website , are listed below for basic designation identification. Refer to the UMRL for full reference standard title and current document date. Comply with the required and advisory portions of the current edition of the referenced standard at the time of contract award.

D10 1.1.1 Industry Standards and Codes

Although some the following references are listed in the UMRL, they are repeated here for emphasis.

References publications in this RFP that refer to the "authority having jurisdiction" shall be interpreted to mean the "Contracting Officer."

AMERICAN GEAR MANUFACTURERS' ASSOCIATION (ANSI/AGMA)

ANSI/AGMA 6035	Design, Rating and Application of Industrial Globoidal Wormgearing

AMERICAN NATIONAL STANDARDS INSTITUTE (ANSI)

ANSI B4.1	Preferred Limits and Fits for Cylindrical Parts

AMERICAN SOCIETY OF CIVIL ENGINEERS (ASCE)

ASCE 7	Minimum Design Load for Buildings and Other Structures

AMERICAN SOCIETY OF MECHANICAL ENGINEERS (ASME)

ASME A17.1	Safety Code for Elevators and Escalators
ASME A17.2	Guide for Inspection of Elevators, Escalators and Moving Walks
ASME A18.1	Safety Standard for Platform Lifts and Stairway Chairlifts
ASME B20.1,	Safety Standards for Conveyors and Related Equipment
ASME B30.10,	Hooks
ASME B30.2,	Safety Standard for Overhead and Gantry Cranes (Top Running Bridge, Single or Multiple Girder, Top Running Trolley Hoist)

AMERICAN SOCIETY FOR TESTING AND MATERIALS (ASTM)

ASTM A27,	Mild to Medium Strength Carbon Steel Castings for General Application

ASTM A36,	Structural Steel
ASTM A434,	Standard Specification for Steel Bars, Alloy, Hot-Wrought or Cold-finished, Quenched and Tempered
ASTM A521,	Standard Specification for Steel, Closed Impression Die Forgings for General Industrial Use.
ASTM A563,	Standard Specification for Carbon and Alloy Steel Nuts (NOT in Spec TEXT)
ASTM A1023/A,	Standard Specification for Stranded Carbon Steel Wire Ropes for General Purposes (NOT in Spec TEXT)
ASTM E1417,	Standard Practice for Liquid Penetrant Examination (NOT in Spec TEXT)

AMERICAN WELDING SOCIETY (AWS)

AWS D1.1,	Structural Welding Code Steel (NOT in Spec TEXT)

NATIONAL FIRE PROTECTION ASSOCIATION

NFPA	National Electric

70, Code

RESEARCH COUNCIL ON STRUCTURAL CONNECTIONS (RCSC)

RSCS	Specification for Structural Joints Using High-Strength Bolts

SOCIETY OF AUTOMOTIVE ENGINEERS (SAE)

SAE J995,	Mechanical and Material Requirements for Steel Nuts
SAE J123,	Surface Discontinuities on Bolts, Screws, and Studs in Fatigue Applications

D10 1.1.2 Government Standards

NAVAL FACILITIES ENGINEERING COMMAND (NAVFAC)

ITG NAVFAC Elevator Design Guide(2001) – This guide can be found at the following web address:

http://www.wbdg.org/ccb/NAVFAC/INTCRIT/fy01_01.pdf

NAVFAC P-307,	Management of Weight Handling Equipment

NAVAL SEA SYSTEMS COMMAND (NAVSEA)

T9074-AS-GIB-010/271,	Requirements for Nondestructive Testing Methods.

US NATIONAL ARCHIVES AND RECORDS - OCCUPATIONAL SAFETY AND HEALTH ADMINISTRATION (NARA/ OSHA)

29 CFR, Part 1910.23,	Guarding Floor and Wall Openings and Holes
29 CFR, Part 1910.27,	Fixed Ladders
29 CFR, Part 1910.179,	Overhead and Gantry Cranes
29 CFR, Part 1910.306,	Specific Purpose Equipment and Installations

U.S. DEPARTMENT OF DEFENSE (DOD) UNIFIED FACILITIES CRITERIA (UFC)

UFC 1-200-01,	General Building Requirements(UFC 1-200-01 is a hub document that provides general building requirements and references other critical UFCs. A reference to UFC 1-200-01 requires compliance with the Tri-Service Core UFCs listed in the document.)

D10 1.2 PERFORMANCE VERIFICATION AND ACCEPTANCE TESTING

Verification of satisfactory Conveying systems performance shall be via Performance Verification Testing, as detailed in this section of the RFP.

D10 1.2.1 Testing and Inspections for Elevators

a. Conduct all testing and inspections in the presence of both the Elevator Specialist and a NAVFAC Certified Elevator Inspector. The Elevator Inspector must complete, sign and post the results of all tests and inspection results after successful completion of inspection and testing. The Contractor is responsible for all costs involved with reinspection and retesting required to correct discrepancies discovered during testing and the subsequent retesting required, including all costs and expenses incurred by the Government Furnished Inspector.

b. Testing Materials and Instruments
Provide testing materials and instruments required for final inspection, including a current equipment calibration certification.

c. Field Tests for Elevators

In addition to the tests required by AMERICAN SOCIETY OF MECHANICAL ENGINEERS (ASME) A17.1 AND ASME A17.2, perform the

following:

(1) Endurance Tests - Test each elevator for a period of one hour continuous run, with specified rated load in the car. Restart the one hour test period from beginning, following any shutdown or failure. During the test run, stop car at each floor in both directions of travel for standing period of 10 seconds per floor. Meet the requirements for Rated Speed, Leveling, Temperature Rise, and Motor Amperes testing specified herein throughout the duration of the Endurance test.

(2) Speed Tests - Determine actual speed of each elevator in both directions of travel with rated load and with no load in elevator car. Minimum acceptable elevator speed is the Rated speed specified. Maximum acceptable elevator speed is 110 percent of Rated speed.

(3) Leveling Tests - Test elevator car leveling devices for landing accuracy of plus or minus 1/4-inch (6 mm) at each floor with no load in car, symmetrical load in car, and with rated load in car in both directions of travel. Car sill must be level with landing sills.

(4) Temperature Rise Tests - Determine temperature rise of elevator hoisting motor, motor-generator, exciter, and booster during full-load test run for one hour minimum. Under these conditions, maximum acceptable temperature rise shall not exceed acceptable temperature rise indicated on manufacturer's data plate. Start test only when equipment is within 9 degrees F (5 degrees C) of ambient temperature.

(5) Motor Ampere Tests - Measure and record motor amperage when motor is running and elevator is lifting at rated load and speed. Measure and record motor amperage at beginning and end of Endurance test. Test results must not exceed nameplate amperage when motor is running and elevator is lifting at rated load speed.

(6) Balance Load for Electric Elevators Tests - Perform electrical and mechanical balance load tests of car and counterweight.

(7) Automatic Shutoff Valve Tests - For hydraulic elevators, test the automatic shutoff valve twice. Once at beginning of acceptance test and again at conclusion of one-hour Endurance test to ensure consistent performance of shutoff valve, regardless of temperature of equipment and oil.

(8) Perform miscellaneous tests called for in this Section.

D10 1.2.2 Crane System and Monorail with Hoist/TrolleySystem Installation and Certification

Provide verification of satisfactory conveying systems performance via Inspection and Testing, as detailed in this section of the RFP. Erect and install the crane or monorail system, complete in accordance with the approved submittals and in condition to successfully perform

the inspections, operational tests, and acceptance tests listed below. In addition, provide statements and certifications listed below.

a. Certification

The following certifications are required to be submitted and approved prior to acceptance load testing.

(1) Load Chain or Wire Rope - Submit wire rope or chain manufacturer's certification of minimum wire rope or load chain breaking force for each hoist.

(2) Overload Test Certificate - Submit a statement that the crane or monorail system and hoist/trolley can be periodically load tested at up to 131.25 percent of rated load.

(3) Loss of Power Test Certificate - Submit a statement that the crane or monorail system can be subjected to loss of power testing without damage (See paragraph entitled "Load Test").

(4) Hazardous Material Certificate - Submit a statement that the crane or monorail system contains no asbestos, lead paint, polychlorinated biphenyl's (PCB's), elemental mercury and that chromates have been avoided where feasible.

(5) Hook Proof Test - Submit a statement that load and suspension hooks have been proof tested and satisfy the acceptance criteria of ASME B30.10.

(6) Welding Certifications

(a) Submit a statement that all welders, welding operators, weld inspectors and welding procedures meet the requirements of AMERICAN WELDING SOCIETY (AWS) D14.1 for all work performed in manufacturing the cranes.

(b) Submit a statement that all welders, welding operators, weld inspectors, and welding procedures meet the requirements of AWS D1.1 for all field welds.

(7) Design Review by Professional Engineer - Submit a statement that non-commercial component design and any modifications to commercial products have been reviewed by a professional engineer. Indicate on the certificate, the name, state of licensure and license number of the professional engineer.

(8) Crane Runway Rail - For runway rails provided as part of this contract, submit survey data and a statement that the runway rails are in accordance with the requirements of CRANE MANUFACTURERS' ASSOCIATION OF AMERICA (CMAA) 70, Table 1.4.2-1, or MH 27.1, Figure 1, as applicable.

(9) Frequency Allocation Application - Complete the technical section of the Application for Equipment Frequency Allocation, Form DD 1494, addressing the radio equipment provided, submitted by the

manufacturer of the radio control equipment being furnished under this contract.

b. Inspection and Testing

After erection, jointly inspect the crane or monorail system and associated components to determine compliance with specifications and approved submittals with representatives of the Contracting Officer and of the end user's Weight Handling Equipment (WHE) Certifying Official. The WHE certifying official is the designated representative of the supported command empowered to designate lifting and handling equipment acceptable for use. Provide a report of the inspection indicating the crane or monorail system is considered ready for operational tests

(1) Operational Tests - After erection and inspection, test the crane or monorail system and hoist/trolley as specified herein. Test the systems in service to determine that each component operates as specified, is properly installed and adjusted, and is free from defects in material, manufacture, installation, and workmanship. Rectify all deficiencies disclosed by testing and retest the system or component under load to prove the system is operational. Furnish loads for testing, operating personnel, instruments, and all other necessary apparatus.

(2) Test Data - Record test data on appropriate test record forms suitable for retention for the life of the crane or monorail system. Record operating and startup current measurements for electrical equipment (motors) using appropriate instrumentation (i.e., clamp-on ammeters). In addition, note, investigate, and correct high temperatures or abnormal operation of any equipment or machinery. Record function speeds during each test cycle.

(3) Hook Measurement

(a) Measure hook for hook throat spread before and after load test. Establish a throat dimension base measurement by installing two tram points and measuring the distance between these tram points. Record this base dimension. Measure the distance between tram points after load test. Any twist or increase in the throat opening from the base measurement shall be cause for rejection.

(b) Hook Identification - Uniquely identify each hook and nut or eye pin (and swivel eye bar as applicable) with some type of permanent marking in order to provide positive traceability to the non-destructive test report. Mark hooks in low stress areas using low stress marking methods.

(4) Load and Suspension Hook Inspection - Non-Destructive Test (NDT) the entire hook, eye pin (and swivel eye bar as applicable) for defects. No linear indications greater than 1/16 inch(1.6 mm) is the acceptance criterion. Acceptance criteria for external hook threads may be based on the acceptance criteria in SAE standard J123. Use magnetic particle method in accordance with NAVAL SEA SYSTEMS COMMAND (NAVSEA) Technical Publication T9074-AS-GIB-010/271 for NDT. American Society for Testing and Materials (ASTM) A275 may be used

with the following restrictions: DC yokes (including switchable AC/DC yokes used in the DC mode) and permanent magnet yokes shall not be used; automatic powder blowers or any other form of forced air other than from a hand-held bulb shall not be used for the application or removal of dry magnetic particles; arc strikes shall be removed; and equipment ammeters shall have an accuracy of +/- 5 percent of full scale (equipment ammeter accuracy other than that stated is acceptable provided the MT procedure states that a magnetic field indicator is used to establish and verify adequate field strength for all aspects of the inspection). For hooks of non-magnetic material, use liquid penetrant (PT) method in accordance with ASTM E 1417 or T9074-AS-GIB-010/271 for NDT. For PT testing of hooks containing stainless steels, titanium, or nickel-based alloys, total halogens, and sulphur used in the NDT process shall be controlled as specified in T9074-AS-GIB-010/271. If NDT cannot be performed on surfaces inside small holes (e.g. hook/nut captivation roll pin holes), visually inspect those surfaces to the maximum extent practical. Perform NDT prior to load tests.

(5). Non-Destructive Test Quality Assurance Requirements.

(a) The magnetic particle inspection report shall include a letter from the performing vendor certifying that the vendor meets the requirements of ASTM E543. Provide current certification, within one year of the date the NDT was performed.

(b) In addition, include report procedures, for review, including technique sheets specific to the types, shapes, and sizes of the parts being examined (e.g., shank hook, eye hook, duplex hook, eye pin, swivel eye bar). Describe the orientation of the hook or pin to the magnetizing equipment in the procedures.

(c) Indicatie review by an independent Level III examiner certified in the applicable NDT method and not an employee of the NDT vendor in the procedures.

(d) In lieu of a., b., and c. above, state in the NDT report that non-destructive testing was performed per Crosby Quality Control Procedure No. 0120, Revision 16, and Technique Sheet No. 319N, Revision 1, or Gunnebo Johnson Quality System Procedure QSP-69, Revision A.

(6) No-Load Test

(a) Hoist: Lower and raise each load hook through the hoist range. Operate at various speeds in both directions. Operate each load hook slowly the full operating lift distance into the hoist primary limit switch or stop and verify satisfactory operation of hoist, upper limit switch or stop, and lower limit switch or stop. Verify that a minimum of two wraps remain on the drum for wire rope hoists and that the load chain is slack on the dead end side for chain hoists when the lower limit switch is engaged. If the hoist is equipped with slow down limits, verify proper operation during the hook travel test. For electric or air powered hoists with primary and secondary limit switches, bypass the primary upper limit switch and check for proper operation of the backup limit switch. For electric hoists, verify

all power to hoist is removed upon actuation of backup limit switch, and the keyswitch reenergizes hoist and allows operation in the down direction only. Operate the hoist at full speed in the up direction until the primary upper limit switch activates. Verify that the hoist stops prior to secondary limit switch operation. Operate the hoist at full speed in the up direction with the primary limit switch bypassed until the secondary upper limit switch is activated. Verify that the hoist stops prior to the load block contacting any portion of the hoist frame. For hoists with two electromechanical brakes, remove power to the crane and observe the proper timing sequence in the application of the primary and secondary brake.

(b) Trolley: Operate the trolley the full length of the monorail or crane bridge rails in both directions. Check the existence of OSHA required 2 inch side and 3 inch overhead clearances during the trolley operation check. Operate at all various speeds in each direction. Verify proper trolley brake operation, if equipped. Slowly contact all trolley stops with the bumpers to verify even bumper contact and that there will be no contact between the crane and any obstruction within the crane envelope with the bumpers fully compressed. Contact the trolley stops with the bumpers at full rated speed, unpowered, and verify structural integrity and that there was no contact between the crane and any obstruction within the crane envelope with the bumpers fully compressed.

(c) Bridge (if equipped): Operate the crane assembly the full length of the crane runway in both directions. Check the existence of OSHA required 2 inch side and 3 inch overhead clearances during the bridge operation check. Operate at all available speeds in each direction. Verify proper bridge brake operation, if equipped. Slowly contact all bridge end stops with crane bumpers to verify even bumper contact and structural integrity and that there will be no contact between the crane and any obstruction within the crane envelope with the bumpers fully compressed. Contact the runway stops with the bumpers at full rated speed, unpowered, and verify structural integrity and that there was no contact between the crane and any obstruction within the crane envelope with the bumpers fully compressed.

(7) Rated Load Speed Test - Test at 100 percent (plus 0 percent minus 5) of rated capacity. If the crane is equipped with multiple trolleys that are used to achieve the rated load of the crane (e.g., two 2,000 pound trolleys which together allow for a 4,000 pound maximum capacity), then perform this bridge rated load speed test with the multiple trolleys loaded simultaneously.

(a) With the hoist loaded to rated capacity, raise and lower the load and record maximum and minimum load speeds in each direction. Also record the voltage and steady state motor amperage draw in both directions at maximum speed. Verify that the hoisting and lowering speeds are provided as specified. Verify slow speed operation (if equipped).

(b) If the capacity overload limit activates during lifting of the rated load (typical of the adjustable type), verify that the drive stops and the load can only be lowered. Bypass capacity overload

device utilizing keyswitch and continue with test.

(c) With the hoist loaded to rated capacity and the load lifted a minimum distance, operate the trolley along the crane bridge, or monorail and record maximum and minimum load speeds in each direction. Also record the steady state motor amperage draw in both directions at maximum speed. Verify that the trolley speeds are provided as specified. Further, verify that the trolley comes to a stop from maximum speed in each direction within a distance (in feet) equal to 10 percent of rated capacity high speed (in feet per minute). Verify slow speed operation (if equipped).

(d) With the hoist loaded to rated capacity and the load lifted a minimum distance, operate crane bridge (if equipped) along the crane runway and record maximum and minimum load speeds in each direction. Also record the steady state motor amperage draw in both directions at maximum speed. Verify that the bridge speeds are provided as specified. Further, verify that the crane bridge comes to a stop from maximum speed in each direction within a distance (in feet) equal to 10 percent of rated capacity high speed (in feet per minute). Verify slow speed operation (if equipped).

(e) With the hoist loaded to rated capacity and the load lifted a minimum distance, operate the swing function (if equipped) at maximum and minimum radius and record maximum and minimum load speeds in each direction. If swing function is powered, record the steady state motor amperage draw in both directions at maximum speed. Verify that the swing speeds are provided as specified. Further, verify that the boom comes to a stop and retains its position. Verify slow speed operation (if equipped).

(8) Rated Load Deflection Test - Test at 100 Percent (plus 0 percent minus 5) of rated capacity.

(a) With the unloaded trolley moved to one end of the bridge or monorail, measure the height of a point near the midpoint of a bridge crane, near the midpoint of the longest unsupported length of a monorail,.

(b) With the hoist loaded to rated capacity, move the trolley to the midpoint of the bridge, midpoint of the longest unsupported length of a monorail. Repeat the measurement taken in step a. Record the difference between the measurements taken in step a. and step b.

(c) Verify that the difference recorded in step b. is less than 1/888 of the span for top running and cambered underunning girder bridge cranes, 1/600 of the span for uncambered underrunning bridge cranes, 1/450 of the longest unsupported length for monorails. Patented track deflection may not exceed 1.25 inch regardless of span.

(d) For bridge cranes, move the unloaded bridge crane over a runway structural support, move the trolley to the opposite end of the bridge, and measure the height of a point near the midpoint of the longest unsupported length of runway. Hoist a load at rated capacity a minimum distance, move the trolley to the end of the bridge nearest the structural support, and travel the bridge to the midpoint of the

longest unsupported length of runway. Repeat the measurement. Record the difference between the measurements. Verify that the difference is less than 1/450 of the unsupported span length for patented rail and underrunning runways, or 1/600 of the longest unsupported length for top running rolled shape runways. Patented track deflection may not exceed 1.25 inch regardless of span.

(9) Load Test - Test at 125 Percent (plus 5 percent minus 0) of rated capacity. If the crane is equipped with multiple hoists or trolleys that are used to achieve the rated load of the crane (e.g., two 2,000 pound trolleys which together allow for a 4,000 pound maximum capacity), then perform these tests with the multiple hoists or trolleys loaded simultaneously. During load testing, only lift the test load a minimum height as necessary to perform the specified tests.

(a) If the capacity overload limit activates during lifting of the test load (typical of the adjustable type), verify that the drive stops and the load can only be lowered. Bypass capacity overload device utilizing keyswitch and continue with test

(b) Hoist Static Test: Raise test load approximately 12 inches (300 mm) above the floor and hold for 10 minutes. Rotate load and hook 360 degrees clockwise and counter-clockwise to check bearing operation. Observe for load lowering that may occur indicating possible malfunction of hoisting components or brakes. Lower the test load to the floor until the hoist line is slack.

(c) Hoist Dynamic Test: Raise the test load using all available speeds. Lower the load back to the floor using all speeds. Visually observe smooth control and acceleration/deceleration between speeds. Stop the test load at least once while hoisting and once while lowering at highest speed and observe that the brake stops and holds the load. Repeat the above cycle for at least 15 minutes.

(d) Load Brake Test (for powered hoists equipped with mechanical load brake and single holding brake):

1. Raise test load no more than 5 feet (1.5 meters). With the hoist controller in the neutral position, release the holding brake. The load brake must hold the test load.

2. Raise test load the minimum amount to perform the following test. Again, with the holding brake in the released position, start the test load down slowly and return the controller to the neutral position as the test load lowers. The load brake must stop and hold the test load.

3. Document the method used to release the holding brake. Brake release method must be recorded to enable repeating that method during later periodic load testing by the end user. Methods of releasing the holding brake vary from hoist to hoist depending upon the design of the brake and hoist and must be specified by the crane manufacturer prior to testing.

(e) Trolley: With test load hoisted to a minimum height, operate the trolley the full distance of the monorail or crane bridge in both

directions using slow speed. Verify satisfactory operation. Verify proper brake operation, if equipped.

(f) Bridge (if equipped): With test load hoisted to a minimum height and the trolley at one end of the bridge, operate the crane assembly the full length of the crane runway. Move the trolley to the opposite end of the bridge, then operate the crane assembly the full length of the crane runway in the opposite direction. Verify satisfactory operation and that bridge trucks move without binding. Verify proper brake operation, if equipped.

(g) Loss of Power Test: Raise the test load approximately 3 feet (900 mm) and while lowering test load, disconnect main power to hoist and return the hoist controller to neutral. Load must stop. Repeat the test for the trolley, bridge and swing functions, as applicable.

c. Field Test Reports.

(1) Brake Adjustment Records. Provide a brake adjustment record for each brake on the crane or monorail system that contains the adjusted air gap, measured brake lining thickness, measured torque spring length, as well as the manufacturer provided range of acceptable measurement for each. Submit the brake adjustment records on the official form, which can be obtained from the Contracting Officer upon request.

(2) Field Test Record. Upon successful completion of all testing, submit a copy of the completed test record and all test data.

(3) After the crane has passed the acceptance test, complete a control system parameter record for the crane including all control system parameters, and explanation of their functions, and their final settings. Designate each control system parameter as either used or unused.

D10 1.3 DESIGN SUBMITTALS

Provide Design Submittals in accordance with Z10, *General Performance Technical Specifications*, UFGS section 01 33 10.05 20, *Design Submittal Procedures*, UFC 1-300-09N, *Design Procedures*, UFC 3-101-01, *Architecture* and UFC 3-301-01, *Structural Engineering*. Provide design submittals that include the following items:

a. Elevators and Weight Handling Equipment (WHE):

(1) Drawings. Show the design of the track beam system, including weight handling equipment curves and switches, principal dimensions, details of structural connections, all component details, and electrical one-line diagrams. Show clearances between elevator and/ or crane structure and building and identify interferences. Provide weight handling equipment wheel load diagrams and hook configuration.

(2) Specification. Provide edited version(s) of the UFGS elevator and weight handling equipment specification(s) that are applicable to this project. Edit this UFGS in accordance with restrictions of RFP Part 4 - PTS Section Z-10 and refer to UFGS 01 33 10.05 20, *Design Submittal Procedures*

for format and further specification requirements. Do not add or delete requirements to the UFGS for weight handling equipment unless specifically approved by Navy Crane Center. Edit UFGS for weight handling equipment only to add project specific information such as capacity and hook height. Submit the applicable UFGS as a part of the Contractor originated design submittal, DO NOT submit RFP Part 4 - D10 as part of the design submittal.

If this RFP includes a type of elevator and weight handling equipment that is not covered in this D10 PTS Section and is specified in a Prescriptive Specification located RFP Part 5, include this Prescriptive Specification in the Contractor's design submittal without modification.

(3) Catalog Cuts. Include catalog cuts in addition to the UFGS sections for all major components. Mark and highlight all catalog cuts to identify all the specific components that are applicable to the project.

D10 1.4 CONSTRUCTION SUBMITTALS

Submit construction submittals in accordance with PTS section Z10, *General Performance Technical Specifications*. In addition to the Z10 requirements, the Designer of Record (DOR) shall approve the following construction submittals as a minimum:

a. Construction Submittals for Vertical Transportation Equipment (VTE)

(1) Elevator Construction Submittals

In addition to the submittal requirements of ASME A17.1, provide the following submittals:

Detail drawings must include dimensioned layouts in plan and elevation showing the arrangement of elevator equipment, accessories, supporting systems, anchorage of equipment and anchorage forces from seismic, gravity, impact, etc. loads, clearances for maintenance and operation; and details on hoistway, doors and frames, operation and signal stations, controllers, motors, guide rails and brackets, and points of interface with normal power, fire alarm system, HVAC or exhaust systems, and interface with emergency power systems. Drawings shall show any revised building electrical system required to make supplied elevator system function as specified. Drawings shall contain complete wiring diagrams showing electrical connections and other details required to demonstrate sequence of operations and functions of system devices. Drawings shall include the appropriate sizing of electrical protective devices, which are frequently different from National Electrical Code standard sizes.

Submit one set of wiring diagrams in plastic or glass cover, framed and mounted in elevator machine room. Deliver other sets to Contracting Officer. Coded diagrams are not acceptable unless adequately identified.

(2) Construction Submittals for Facility Electronic Operation and Maintenance Support Information (eOMSI):

Submit final submittals for eOMSI Submittal. After approval by the DOR and sign-offs by the elevator inspector, assimilate construction submittals into the OMSI manuals required under Section 01 78 24.00 20, *Facility Electronic Operation and Maintenance Support Information*.

b. Construction Submittals for Weight Handling Equipment (WHE):

(1) Drawings. Submit to DOR for approval, the construction submittal and drawings described below. After DOR approval submit to the Government for approval or surveillance as required in UFGS section 00 33 00.05 20, *Construction Submittal Procedures.* Manufacturer's catalog data will suffice for standard commercial products. Each assembly and subassembly drawing shall include an integral Bill of Materials or shall be followed by a consecutively numbered drawing with the applicable Bill of Materials.

(a) General Arrangement Drawings. Show in plan, elevation and end view the crane or monorail system assembly and each major component, including runways for underrunning cranes to demonstrate proper interface with the facility building. Show all major features including: clearances, lifts, speeds, hook approaches (on all sides), maximum wheel loads (without impact), electrical or pneumatic power supply, and general locations of components such as: hoists, trolleys, brakes, motors, speed reducers, and control panels (including size). Indicate torque value or tightening method (e.g. turn of the nut) for bolts on the drawing. In addition, show estimated weights for major components (girders, trolleys, runway beams, control panels and end trucks) and the completely assembled crane. Provide approximate locations of center of gravity and location of lifting points for completely assembled crane and for each major component with the design drawings.

(b) Structural Drawings. Show fabrication details including all weldments, fastener joints, structural components, and list of materials for fabricated crane girders (including end stops), fabricated trolleys and fabricated end trucks on these drawings. Specify the type of structural bolted connection (i.e. slip critical, snug-tightened, or pretensioned) on the drawing.

(c) Mechanical Drawings. Show the layout of mechanical equipment on cranes and monorail systems on the drawings, in particular drive arrangements (including assembled components). On pneumatically powered cranes, show the layout of pneumatic equipment, including control panel enclosures, motors, brakes, limit switches, piping and valves on the drawings. The drawings must also include:

1. Complete schematic diagram of pneumatic systems with narrative of any special description of operation. All components shown on schematics shall have labels that correspond to the nameplates that will be on the crane. Pipe material and size shall be included.

2. Rating and types of over-pressure protective devices.

3. Complete assembly diagrams including a component material list. Show on the drawings the layout of pneumatic equipment on the crane including: motors, brakes, limit switches, conduits, and piping systems.

(d) Electrical Drawings. Show the layout of electrical equipment on cranes and monorail systems, including control panel enclosures, motors, brakes, limit switches, conduits, disconnects, and conductor systems on the drawings. The drawings must also include:

1. Complete schematic diagram with narrative of any special description

of operation. All components shown on schematics must have labels that correspond to the nameplates that will be on the crane. Wiring type, size, and temperature ratings must be included on schematic diagrams. Remove all optional equipment not included in this project from the schematic diagrams.

2. Motor nameplate data (including all information called for in NATIONAL FIRE PROTECTION ASSOCIATION(NFPA) 70, Section 430.7 (A) items 1 through 7)

3. Rating and types of over-current protective devices.

4. Complete assembly (wiring) diagrams including a component material list. Show on the drawings, the layout of electrical equipment on the crane, including control panel enclosures, motors, brakes, limit switches, conduits, and conductor systems.

5. Layout diagrams showing component placement in control panel enclosures.

(2) Product Data. Provide manufacturer's catalog data for all major components of cranes and monorail systems. Mark-up or supplement the catalog cuts with additional sheets to clearly identify the model or size, selected options, features, and/or modifications to demonstrate compliance with specification requirements. Catalog cuts which show modifications beyond the standard options and all supplemental pages must bear original signatures and dates of the equipment manufacturer's authorized representative. Clearly identify the item on the catalog cuts and each supplemental sheet to which it applies.

(a) Structural Product Data. Submit product data for Bridge End Trucks, Trolley Frame, Patented Track, Runway and Bridge Rails and Support System, and End Stops.

(b) Mechanical Product Data. Submit product data for Speed Reducers, Brakes (including electrical information), Bearings, Couplings, Load Blocks, Hoist/Trolley (if procured as a packaged unit), Hose Reels, Oilers, Pressure Regulators and Bumpers.

(c) Electrical Product Data. Submit product data for Variable Frequency Drives, Motors, Electrical Enclosures, Runway Electrification and Collectors, Limit Switches, Bridge to Trolley Electrification, Pendant or Radio Control Station, Warning and Pilot Devices, Disconnect Switches, and Fuses and Circuit breakers.

(3) Design Data. Provide calculations that demonstrate compliance with all design requirements. Design data will not be approved if their evaluation/review is dependent on data or information not previously approved. List and define all variables at the beginning of each calculation section; variables must be in accordance with required references. Include sufficient information in the design data, so that they may be approved without reference to detail (shop) drawings.

When there is one hoist on one monorail system, the monorail system rated capacity and the hoist rated capacity will be equal. When there is more than one hoist on the monorail system, the rated capacity of the monorail track beam system shall be designed equal to the sum of the two hoists rated capacities. An exception to this is that if the two hoists are separated

by positive track beam stops and distance so that the track beam is strength-wise essentially two independent track beam systems.

(a) Structural Calculations. Submit calculations verifying the sizing of any track, track suspension device and additional supports, which are not the runway or monorail system manufacturer's standard cataloged product. Include support reactions and recommended method of connecting/attaching the support. Provide calculations verifying compliance with Section 3 of CMAA No.70 or No. 74 or Section 6 of MH 27.1. In addition to Load Cases 1 and 2 of CMAA No. 70 and 74, the following load combinations are also required in the crane design calculations:

1. CMAA Case 3: Test Loads. The crane will be periodically tested up to 131.25% of rated capacity. Combined stresses for the following load combinations must be calculated to ensure structural adequacy during testing:

DL (DLFB) + TL (DLFT) + LL (1 + HLF) + IFD + SK

Test Loads (Stress Level 3). In this calculation use LL = 1.3125 x rated capacity. Do not consider the test and extraordinary loads in the fatigue analysis. Formula abbreviations correspond to principal loads as defined in CMAA #70 and 74, Section 3.3. The subscripts T and B refer to trolley and bridge, respectively.

2. CMAA Case 4: Seismic Load. Provide seismic analysis in accordance with AMERICAN SOCIETY OF CIVIL ENGINEERS (ASCE) 7-05. Consider loading condition in an event while the crane is operating at rated capacity without lowering or dropping the load.

3. Calculations verifying design of runway and bridge rail stops and bumpers in accordance with the dynamic requirements of Association for Iron and Steel Technology (AIST) TR-06.

4. For cranes that operate outdoor without wind protection, calculations determining the wind speed that will cause the crane travel, trolley, and rotate functions to drive through the brake with the brakes set, and, for rail mounted or wheel mounted cranes, the wind speed that will cause the crane to slide on the rail or runway surface with the brakes set.

(b) Mechanical Calculations. Calculations verifying compliance with Section 4 of CMAA #70, regardless of crane type, for any non-commercial items.

(c) Electrical Calculations

1. Minimum required horsepower for each drive motor - Motor power rating must be based upon the formulae given in CMAA#70 regardless of crane type. For hoist motor sizing calculations, the factor "Kc" shall not be less than 1.0 .For bridge and trolley drive motor sizing calculations, the factor "E" shall be the published gear reducer efficiency ratings. For the bridge drive the minimum acceleration rate must be 4 seconds and 2 seconds for simulated plugging (deceleration). For the trolley drive the minimum acceleration rate must be 3 seconds and 1.5 seconds for simulated plugging. Calculations are not required for packaged hoists, but packaged hoists must still meet acceleration and deceleration requirements.

2. Overcurrent protection.

3. Conductor sizing and Conduit fill calculations (using tables from NFPA 70, Chapter 9 or manufacturer's data sheets).

4. Protective device coordination study showing proper coordination for any overcurrent devices that have the same rating as another overcurrent device upstream

5. Transformer sizing.

6. Drive controller sizing for hoist motors.

(4) Facility Electronic Operation and Maintenance Data, Documents, and Training Information. Submit the WHE's operation and maintenance data, document, and training information to be incorporated in the UFGS 01 78 24.00 20, *Electronic Facility Operation and Maintenance Support Information*(eOMSI) submittal. Make a copy of the eOMSI submittal available at the acceptance test. Include in the eOMSI submittal a table of contents, operation instructions, preventive maintenance instructions including maintenance, training materials, and programming instructions for the adjustable frequency drives, parts information, a drawing list, design drawings, lubrication drawing supply list, catalog cuts, photographs as needed to explain maintenance or repair procedures, and calculations. Provide maintenance instructions to include recommended maintenance procedures and component manufacturer's installation and maintenance manuals and lubrication instructions. Include detailed crane operating and safety instructions in the operating instructions. Parts information must include information on purchased sub-assemblies and components, including manufacturer's original part number, and detailed drawings of contractor-designed parts. Break-out the parts information into the smallest replacement part.

(5) Provide onsite training for unique critical job skills associated with the crane or attachments

(6) Field Test Reports. Submit a copy of all Field Reports.

D1010 ELEVATORS AND LIFTS

Comply with the *ITG Elevator Design Guide*for the design and construction of elevators.

D1010 1.1 QUALIFICATION OF MANUFACTURER AND INSTALLER

Provide elevator by manufacturer regularly engaged in the manufacture of elevator systems. Manufacturer must either install elevator system or provide letter of endorsement certifying that installer is acceptable to manufacturer. Installer is required to be regularly engaged in installation and maintenance of elevator systems.

If the project is located in the State of Hawaii, perform work involving the installation or repair of elevator equipment under the supervision of a person who is licensed in elevator repair in the State of Hawaii or who possesses the equivalent experience. Furnish data to the Contracting

Officer for verification that the person exercising direct supervision of the work possesses such experience.

D101001 GENERAL CONSTRUCTION ITEMS

Comply with ASME A17.1 AND ASME A17.2 in their entirety, and additional requirements specified herein. Install in accordance with manufacturer's instructions, ASME A17.1, DoD ABA and DEPSECDEF Memorandum (dated October 31, 2011), and NFPA 70. Do not cut or alter Structural Members. Restore damaged or defaced work to original condition. Include recesses, cutouts, slots, holes, patching, grouting, and refinishing to accommodate installation. Use core drilling to drill new holes in concrete ensuring that no existing reinforcing is cut. Finish work to be straight, level, and plumb. During installation, protect machinery and equipment from dirt, water, or mechanical damage. At completion, clean all work, and repair any prefinished items that have been damaged during the performance of the work.

Elevators that are intended to carry personnel other than one (1) operator must be classified as a passenger elevator. Passenger elevators that are intended to carry furniture or equipment, must have an oversized cab. Refer to the Project Program for the type of elevator required.

D101001 1.1 TRAFFIC ANALYSIS

Provide a traffic analysis in accordance with criteria established by a nationally recognized elevator manufacturer's association and conduct interviews with the U ser to determine the following:

a. Passenger or Freight
b. Rated load
c. Rated speed
d. Travel length
e. Number of stops
f. Number of hoistway openings
g. Car platform, car inside, and hoistway door opening dimensions
h. Hoistway Door Types
i. Car Door type
j. For Freight Elevators, identify Class Loading Type - Class A, B, or C, to handle loads as indicated on the project program.

D101001 1.2 ELEVATOR MACHINE ROOM

Provide a machine room for every elevator. Locate the elevator machine and controller in the Elevator Machine Room.

D101002 PASSENGER ELEVATORS

D101002 1.1 HOISTWAY AND CAR EQUIPMENT

D101002 1.1.1 Car and Counterweight Guide Rails and Fastenings

Paint rail shanks with one coat of black enamel. Only T-section type guide rail is acceptable.

D101002 1.1.2 Pit Channel

Provide pit channel for anchorage of main guide rail brackets and also for anchorage of counterweight guide rail brackets and buffer for electric elevators. Each channel must span distance between guides. Fully grout both pit channels on completion of guide rail and buffer installation.

D101002 1.1.3 Pit "STOP" Switch

Provide push/pull type pit "STOP".

D101002 1.1.4 Wiring and Traveling Cables

Suspend cables by means of self-tightening webbed devices.

D101002 1.2 CAR AND LANDING DOOR EQUIPMENT

D101002 1.2.1 Infrared Curtain Unit

Provide Infrared Curtain Unit (ICU) with multiple infrared beams that protect to the full height of the door opening. Extend minimum coverage from 2 inches (50 mm) off the floor to 70 inches (1778 mm) above floor level.

D101002 1.2.2 Hoistway Entrance Frames

Provide 14 gage (1.8 mm) thick #4 brushed stainless steel door frame unless directed otherwise by Contracting Officer. Solidly grout uprights of entrance ways to height of 5 feet (1500 mm).

D101002 1.2.3 Car and Hoistway Landing Sills

Car and Hoistway Landing Sill - Provide one piece cast solid white bronze or nickel silver entrance sill. Use same material for hoistway and car entrance sills. Solidly grout under full length of sill.

D101002 1.3 IN-CAR AND LANDING FIXTURES

D101002 1.3.1 Car and Hall Buttons

Provide recessed vandal-resistant push buttons of minimum 3/4-inch (19 mm) size satin-finish stainless steel with illuminating jewel center.

D101002 1.3.2 Position and Direction Indicators

Provide position and direction indicators in car and at each landing.

D101002 1.3.3 Direction Audible Signals

Provide audible signals in car and at each landing.

D101002 1.4 CAR AND CAB EQUIPMENT

D101002 1.4.1 Roller Guides

Provide coil-spring loaded roller guide assemblies in adjustable

mountings on each side of car and counterweight frames in accurate alignment at top and bottom of frames.

D101002 1.4.2 Certificate Window

Provide 4 inch (100 mm) high by 6 inch (150 mm) wide certificate window in car operating panel for elevator inspection certificate.

D101002 1.4.3 Cab Ventilation

Provide natural and forced ventilation with two-speed fan.

D101002 1.4.4 Protection Pads and Mounting Hooks

Provide stainless-steel hooks and fire retardant protective pads for one elevator in a set.

D101002 1.4.5 Car Enclosure

Car Shell Return Panels, Entrance Columns, Cove Base, and Transom: Provide 14 gage (1.9 mm) minimum non perforated steel. Apply sound-deadening mastic on all exterior components.

Provide finishes for the elevator cab interior that are appropriate for the type of facility. Finishes shall not exceed the flame spread rates mandated by ASME A17.1.

D101002 1.4.6 Car Size

Provide at least one elevator of a size and arrangement to accomidate an ambulance stretcher in the open, horizontal position. The minimum size of the ambulance stretcher used to design the elevator must be 24 inch by 84 inch (609.6 mm by 2133.6 mm) with not less than 5 inch (127 mm) radius corners. Identify all stretcher accessable elevators with the international symbol for emergency medical services (Star of Life).

D101002 1.5 ELEVATOR CONTROLLER

D101002 1.5.1 Non-proprietary Controller

Provide micro-processor controllers from controller manufacturers who provide generic controllers that are designed to function with all or most manufacturers elevator equipment. The manufacturer of the controller shall engage solely in the manufacture and sale of controllers to the elevator industry and not engage in the elevator installation, service, or maintenance. The follow controller manufactures comply with this requirement:

a. Elevator Controls Corporation, 3525 La Grande Boulevard, Sacramento, CA 95823

b. G.A.L. Manufacturing Corporation, 50 East 153th Street, Bronx, New York 10451

c. Motion Control Engineering, Inc., 11354 Whiterock Road, Rancho

Cordova, CA 95742-6522

d. Virginia Controls, Inc., 2513 Mechanicsville Turnpike, Richmond, VA 23223

e. Computerized Elevator Control Corporation (Swift), 24 Empire Blvd., Moonachie, NJ 07074-1303

The following are required features of the generic micro-processor controllers and manufacturers training:

a. On-Board Diagnostic Panel

(1) Provide a non-proprietary micro-processor controller for each individual elevator and group controller. Provide an on-board diagnostic control and LCD display panel that allows unrestricted access to the comprehensive range of adjustable parameters necessary to perform installation, adjusting, service, maintenance, and testing of the elevator.

(2) Provide LCD displays with the capability to display, monitor, and diagnose any and all fault logs, fault history, trouble calls, and diagnostics. Provide three (3) copies of the complete manufacturer's software program, with complete software documentation, that must enable the same level of unrestricted access to all controllers of the same make and model, regardless of the installation date or location.

b. External Port - For each individual elevator and group controller, provide a USB port or an RS 232 port that allows connection to an on-site portable laptop computer. Provide the same level of unrestricted access as the on-board diagnostic panel.

c. Repair Requirements - For repair of the microprocessor control system(s), provide maintenance tools, supporting computer software, and software documentation required for complete maintenance of elevator system including diagnostics and adjustments. On-board diagnostic panels must not require recharging to maintain their memory or authorization for use. Software must not require periodic reprogramming, or reauthorization. Store programs in non-volatile memory.

d. Training - The elevator controller manufacturer must offer and conduct technical support and factory training that is available to all state licensed elevator service providers qualified to bid on navy elevator maintenance service contracts. Include in the factory training all aspects of the installation, service, and maintenance of the elevator controller.

D101002 1.6 OPERATIONAL CONTROLS

D101002 1.6.1 Independent Service

Provide exposed key-operated switch in car operating panel to enable independent service.

D101002 1.6.2 Hoistway Access Switches

Provide key-operated hoistway access switch to permit limited movement of car at terminal floors for car positioning, operative only when "INSPECTION" switch in car operating panel is in the "INSPECTION" position. Locate switch 6 feet (1800 mm) above floor level, within 12 inches (300 mm) of hoistway entrance frame or with only ferrule exposed when located in entrance frame.

D101002 1.6.3 Emergency Commandeering Service

Provide momentary pressure "ON-OFF" key switch and indicator light at all landings. Provide indicator lights that automatically illuminate during emergency service. Key must be removable only when key is in "OFF" position. Provide in accordance with ASME A17.1.

D101002 1.6.4 Keys for Elevator Key Switches

Provide minimum of twelve keys per unique cylinder used on all key switches for single elevator.

D101002 1.7 MAINTENANCE AND DIAGNOSTIC COMPONENTS

D101002 1.7.1 Maintenance and Diagnostic Tools

Provide all special tools and software necessary to service and maintain each elevator; deliver at time of final acceptance. Provide one of each tool for each elevator machine room.

D101002 1.8 ADDITIONAL REQUIREMENTS FOR HYDRAULIC ELEVATORS

D101002 1.8.1 Hydraulic System

Provide hydraulic system which operates at a maximum working pressure of less than 500 psig.

a. Scavenger Pump Unit - Provide a scavenge oil reservoir, with strainer and transfer pump. Provide a manual-reset pit flood switch to prevent pump operation if pit is flooded. Anchor pump and oil reservoir to the pit floor.
b. Pressure Piping and Accessories - Provide ASTM A 53/A 53M or ASTM A 106/A 106M, Schedule 80, black steel piping with ASME B16.9 or ASME B16.11 fittings for supply piping. Provide welded or threaded forged pipe fittings that are located between the pump control valve body and the cylinder inlet. Extend Schedule 80 piping from the pump control valve body, inside the pump unit, to the hydraulic cylinder in the hoistway. Provide dielectric union at each end of the "pump to cylinder" oil supply line. Provide hangers or supports for all piping.
c. Oil Temperature Device - Provide means to maintain oil temperature between 80 and 120 degrees F (27 and 49 degrees C) regardless of ambient temperature.

D101002 1.8.2 Cylinder-Plunger Unit

Provide a plunger of single-piece seamless steel construction.

Provide threaded 1/4-inch (6 mm) bleeder valve at top of cylinder just below packing gland. Telescopic or inverted cylinder-plunger units are not acceptable. Provide cylinder with self-stabilizing mount that will support and hold cylinder plumb without the need for stabilization means at the bottom of the cylinder.

D101002 1.8.3 Automatic Shutoff Valve

Provide automatic shut-off valve in oil supply line as close to cylinder inlet as possible. Provide threaded pipe connections to the valve. Provide manual lowering feature on valve. Provide exposed adjustments of automatic shut-off valve with means of adjustment sealed by certified elevator inspector after being set to correct position and tested.

D101002 1.8.4 Well Casing

Line well with steel casing, minimum 1/4-inch (6 mm) wall with welded 1/2-inch(10 mm) steel bottom, set plumb. Install cylinder well casing plumb using spider bob method.

a. PVC Liner - Provide Schedule 80 PVC pipe liner with bottom cap and couplings; joints sealed watertight using PVC pipe manufacturer's recommended adhesive or heat welding methods. Provide liner inside diameter not less than 3-inch (76 mm) larger than elevator cylinder maximum outside diameter. Set PVC liner into well casing, centered and plumb. PVC liner may be provided as a manufacture’s applied liner or as a separate component.
b. Cylinder Installation - Install Cylinder plumb into PVC.
c. Cylinder Evacuation Tube - Provide a 3/4-inch (19 mm) PVC evacuation tube with strainer located within 6 inch (152 mm) of bottom of liner. Provide top of test tube with removable cap to exclude foreign matter.
d. Pressure Test - Test liner-cylinder assembly as a sealed unit. Provide safety relief valve set to relieve at 10 psig (69 kPag); 4.5 inch (114 mm) diameter dial pressure gage scaled for 0 to 50 psig (0 to 175 kPag) and calibrated to 0.5 percent accuracy; and an air pressure admission throttling and shutoff valve. Perform air pressure test in the presence of the Elevator Inspector. For safety, pressure test shall only be performed when liner and cylinder are fully inserted and assembled in the well casing. Perform the test from remote location outside of the elevator pit.
e. Secure cylinder/PVC liner assembly as recommended by cylinder manufacturer.
f. Seal - Seal gap between steel well casing and PVC liner with foam insert strong enough to retain and support final grouting. Provide 3000 psi (21 MPa) grout to a minimum of 4 inch (102 mm) thickness and level top of final grouting with pit floor.
g. Containment - Protect exposed portions of hydraulic elevator oil supply line that are installed below ground, including portions encapsulated in concrete, or covered by construction, with continuous Schedule 80 PVC containment.
h. Provide layout diagram, foundation support details, and foundation loads.

D101003 FREIGHT ELEVATORS

D101003 1.1 FREIGHT ELEVATOR REQUIRMENTS

Code compliance and all other general compliance items for freight elevators must be as for passenger elevators, except for such items deleted, altered or added to by the Project Program.

D101003 1.2 ADDITIONAL REQUIREMENTS FOR FREIGHT ELEVATORS

a. Guides - In addition to ASME A17.1, for freight elevators with greater than 10,000 pound (4545 Kg) capacity, slide guides are permitted in lieu of roller guides.
b. Horizontal Buck Board Wall Protection – Provide 2-1/2 inch (63 mm) thick (minimum) x 12 inch (304 mm) high (minimum) #2 oak protection boards on all side walls of the elevator at a height to prevent damage from fork lift traffic.

D101004 WHEELCHAIR LIFT

Comply with ASME A18.1, *Safety Standard for Platform Lifts and Stairway Chairlifts*.

D101005 DUMBWAITERS

Comply with ASME A17.1, *Code for Elevators and Escalators*.

D1020 WEIGHT HANDLING EQUIPMENT

Cranes and monorail systems must be designed, fabricated, assembled, shop tested, delivered, installed, inspected, field tested, and made ready for use in accordance with these RFP requirements, the applicable UFGS specification, the reference standards, and building codes. Build the crane or monorail system to the design drawings of a registered professional engineer. This PTS section is designed to provide requirements for all of the most commonly used building cranes types. Equipment provided must meet the paragraphs entitled BASIC REQUIREMENTS FOR CRANES AND MONORAIL WITH HOIST/TROLLEYS below, requirements of paragraphs entitled OVERHEAD CRANES for the crane type provided below, requirements of paragraphs entitled HOISTS for the hoist type provided as stated below, and the applicable UFGS specification section.

D102001 BASIC REQUIREMENTS FOR CRANES OR MONORAILS WITH HOISTS/TROLLEYS

D102001 1.1 SAFETY

Comply with ARCHIVES AND RECORDS (NARA/ OSHA) 29 CFR, Part 1910.179, *Overhead and Gantry Cranes*and the mandatory (shall) and advisory (should) safety requirements of ASME B30.2, B30.11, B30.16 and B30.17, as applicable depending upon crane type.

D102001 1.2 MATERIALS

Provide material free from defects and imperfections that might affect the serviceability and appearance of the finished product. Provide new and unused materials that conform to the following standards.

a. Ductile Materials. All nonâ€‘redundant components directly supporting the load must be of ductile materials. These components include, but are not limited to all hoist drive gear reducer housings, motor frames and end bells (except for C-face mounted components of packaged hoists), flanged adapters, and brake wheels and discs. For the purposes of this specification ductile is defined as having a minimum elongation of 5% in 2 inches. Furthermore, provide all shafts, keys, gears, torque carrying coupling components, and wire rope drum of steel.
b. Structural Steel conforms to ASTM A36, A572 or A992.
c. Cast Steel conforms to ASTM A27 or ASTM A148.
d. Ductile Cast Iron conforms to ASTM A536.
e. Forged steel conforms to ASTM A668 or ASTM A521, grade as applicable.
f. Steel shafts conform to ASTM A434.
g. Aluminum castings conform to ASTM B26 or ASTM B108.
h. Welding materials for crane fabrication conform to AWS D14.1
i. Welding materials for field welds conform to AWS D1.1.

D102001 1.3 TOLERANCES

Provide tolerances in accordance with the RFP requirements and the standards referenced herein.

D102001 1.4 OPERATING ENVIRONMENT

Provide pendant or radio controlled cranes and monorail systems designed to operate on electric or pneumatic or hand power as indicated in the Project Program. Design indoor equipment for an environment with an ambient temperature range of 40 Â°F to 105 Â°F. Design outdoor equipment for an environment typical of the installation location, including protection against adverse temperature, humidity, ultraviolet radiation, wet weather, salt air, corrosive atmosphere, and include features necessary to prevent in-service or premature age related failure.

D102001 1.5 APPLICABLE DESIGN STANDARD

Design cranes and monorail systems in accordance with CMAA #70, CMAA #74, MH 27.1, 29 CFR 1910.179, 29 CFR 1910.306, paragraph (b), ASME B30.2, ASME B30.11, ASME B30.16, ASME B30.17, ASCE 7-05 and other requirements specified herein. Design packaged hoist in accordance with ASME HST. A packaged hoist is defined as a hoist where the components are mounted via c, d, or p-face flanges as opposed to base mounted. All packaged hoists must be produced by established manufacturers. Furnish and install runway electrification or air distribution system as well as runways for underhung cranes, monorails as part of this specification. Provide the hook work envelope to be the maximum practical consistent with good design.

Choose rated speed of all crane functions from the SLOW or MEDIUM speeds provided in CMAA 70 or CMAA 74 for the crane configuration and rated capacity and to agree with the Project Program stated end User requirements. Provide minimum function speeds to be 1/10 rated speeds.

D102001 1.6 COMPONENTS

A standard commercial product/assembly is defined as an item that is advertised for sale in current commercial literature and is being sold in

substantial quantities on the open market in the course of normal business operations. Nominal quantities, as normally associated with models, samples, prototypes, or experimental units are not acceptable under this definition. The contractor may utilize standard commercial products/assemblies in the design of the crane provided such components meet the requirements of this specification. Component selection must be substantiated by means of manufacturer's published ratings, selection method, or pro-rating. All components and assemblies furnished must be new and unused.

D102001 1.7 STRUCTURAL DESIGN

Structural design must conform to AISC Steel Construction Manual, CMAA No. 70, CMAA No. 74 or MH27.1 using ASTM A36, A572, A588 or A992 structural steel, 29 CFR Part 1910.179, ASME B30.2, 29 CRF Part 1910.23 and 1910.27, ASCE 7-05, and other requirements specified herein.

D102001 1.7.1 Space Envelope

Design cranes and monorail systems to operate in the space and match the runway dimensions indicated in building design drawings. Provide the maximum practical hook work envelope to be consistent with good design, but not less than indicated in the Project Program.

D102001 1.7.2 Structural Fasterner Tightening

All bridge girder to end truck connection fasteners and any other fasteners critical to the structural integrity of the cranes must be installed and tightened in accordance with one of the methods in the RCSC Specification for Structural Joints using High Strength Bolts.

D102001 1.7.3 Welding

All welding procedures, nondestructive testing requirements and welder qualifications shall be in accordance with the requirements of AWS D14.1 for crane and monorail system fabrication and D1.1 for building interface welds.

D102001 1.7.4 Wheel Loads

Maximum wheel loads (without impact), as well as column loads and moments due to dead load and the rated capacity live loads, with the trolley in any position, must not cause greater shear or moment in runway girders and/or supporting structures than that produced by the design crane or monorail system load and spacing shown in the facility final design. Building designs/drawings will be provided to the contractor for planning the design, shipping and erection of components.

D102001 1.7.5 Patented Track Monorail, Runway Systems and Bridge Girders

Provide monorails, underrunning runway systems and bridge girders for underrunning hoists with patented steel track, specially designed, fabricated and heat treated in accordance with MH 27.1, minimum Duty

Service Classification C.

Utilize the runway or monorail (be supported from) the structural supports indicated on the facility final design. The track system and track suspension are the sole responsibility of the runway track supplier. However, design in accordance with the requirements of this RFP. Design and construct the suspension system to ensure no impairment of the strength of track or the structural support. Locate hanger or suspension at each track splice joint. Provide bracing to hold track sections in rigid alignment at all joints.

a. Sway Bracing - Brace track laterally and longitudinally to prevent damaging sway from loading conditions (dynamic, impact, seismic, etc).

b. Cataloged Products - If possible, provide track manufacturer's standard cataloged devices for connection of the track to the indicated supporting structures. If track manufacturer's cataloged devices are not provided for this suspension system, submit complete shop drawings and calculations for each custom suspension device for review and approval.

c. Suspension of Curves and Switches - Provide steel framing (structural supports), in addition to that indicated, as required by the track curve and switch manufacturer to support curves and switches. The additional steel framing shall be the sole responsibility of the track supplier.

D102001 1.7.6 Wind Force Countermeasures For Outdoor Cranes

Provide wind brakes for each function (e.g. travel, trolley, rotate) of outdoor operating cranes where design calculations show that the function brake(s) are not sufficient to prevent inadvertent movement during crane operation in the event of worst case anticipated wind forces. Provide a securing method for each function (e.g. travel, trolley, rotate) of cranes stowed outdoors where design calculations show that the function brake(s) and additional wind brakes are not sufficient to prevent inadvertent movement during stowed condition in the event of worst case anticipated wind forces.

D102001 1.8 MECHANICAL DESIGN

The mechanical design of the cranes must conform to minimum of CMAA 70, Class C, MH 27.1, Duty Service Classification C, ASME B30.2, ASME B30.11, ASME B30.17 and other requirements specified herein. All drives which are not directâ€‘connected with shafts in line must be driven through gears. Do not rely upon retaining rings for axial retention of sheave pins or bearings on pins and axles and they are permitted only on standard commercial assemblies. Do not rely on press fits for transmission of torque, except in travel drives. Cotter pins are permitted only for locking nuts to prevent loosening and for retaining pins in standard commercial brake assemblies. Conform enclosed gearing to ANSI/ AMERICAN GEAR MANUFACTURERS' ASSOCIATION (AGMA) 6013, 6034, or 6035, as permitted. Design open gearing in accordance with ANSI/AGMA 2001.

D102001 1.8.1 Design Factors

Design cranes and monorails using the following factors:

a. Compute stresses and ratings, except as modified herein, using the locked rotor torque or horsepower of the driving motor.

b. For wire rope drum and related component calculations, the line pull off the drum shall be taken as that necessary to balance rated motor torque.

c. Design the hoist drive, except the wire rope, to withstand the setting of the hoist brake(s) under a full speed lowering condition with either no-load or rated load on the hook whichever load condition represents the worst case scenario.

d. Unless otherwise specified, design or select all mechanical components, including fasteners, to provide design factors of 4.0 and 5.0 based on material yield and ultimate tensile strengths respectively at rated load. Furthermore, except where stated otherwise, those components that are subjected to momentary peak loads (due to starting, braking, or locked rotor torque) must be designed to limit the peak stresses to 0.75 of the material yield strength, except that peak compressive stresses must be limited to 0.90 of the material yield strength.

e. Design the load suspension parts of hand chain operated hoists including load chain so that the static stress calculated for the rated load do not exceed 25% of the minimum ultimate tensile strength.

f. Design shafts and axles subjected to reversing stresses for fatigue loading per CMAA #70, regardless of crane configuration. Do not consider shaft loading resulting from the setting of brakes in the fatigue evaluation.

D102001 1.8.2 Mechanical and Threaded Fasteners and Tightening

All fasteners used in securing mechanical or electrical-mechanical (i.e., brakes) components to their foundations must be tightened to accepted torque values from standard tables based on the lubricant used. The fasteners must be lubricated and not be installed "dry". Where self-locking nuts are used, the prevailing torque of the locking element must be accounted for. Nominally tighten all mechanical fasteners to 70% of the fastener yield strength, except in applications where component manufacturers prescribe specific fastener torque requirements.

Fasten all flange-mounted components and all mechanical connections subjected to calculable loads with SAE J429, Grade 5 or Grade 8 fasteners, ASTM F436 washers, and SAE J995 Grade 5 or Grade 8 nuts. Mounting fasteners from flange-mounted components, including keeper bars, may be installed into tapped holes provided that adequate thread engagement is provided to develop the full tensile strength of the fastener. Provide all nuts with a minimum of one thread pitch of the bolt protruding above the nut top surface. Size fastener connections neglecting any benefit from shear bars or dowel pins.

D102001 1.8.3 Hoist Load Chain or Wire Rope

Provide uncoated load chain. Provide uncoated wire rope that conforms to XIP or XXIP, 6x36, IWRC per ASTM 1023/A. Minimum design factor of 5 to 1 must be provided based on ratio of minimum chain or wire rope breaking force to the calculated load on the chain or wire rope when the hoist is assumed loaded to rated capacity. Certification from hoist manufacturer of provided chain's proof test at 150% of the hoist's rated load divided by the number of chain parts supporting the load for at least 10 minutes without deformation or wire rope's breaking force must be submitted to Contracting Officer and approved prior to final acceptance of hoist. Do not paint, galvanize or coat the load chain or wire rope. Wedge sockets are not permitted as terminal fittings on wire rope. Hoisting rope dead end connections to equalizer bar (if used) or hoist frame must be by means of poured socket connections or swaged fittings installed in a manner that develops the full breaking strength of the hoisting rope. Provide forged steel sockets. Anchor hoisting rope ends on the drum by means of swaged fittings or by clamping. Clamped hoisting rope ends must be neatly and securely seized with wire. Maintain a minimum of two full wraps of rope at the dead end(s) of the drum with the block in its lowest indicated position.

D102001 1.8.4 Load Block and Hook

Construct load blocks of steel. Design the load block to preclude the wire rope from being cut, pinched, crushed, or chafed in case of two-blocking or unloading of the wire rope. Construct load blocks so that hooks and hook nuts can be removed without re-reeving the hoist. Hooks must be able to rotate freely with 131.25% of rated load and employ a thrust bearing rated at no less than 150% of the rated load. Clearly mark hoist capacity in pounds on both sides of the load blocks.

Provide single barb forged carbon steel (conforming to ASTM A668 or ASTM A521 with a material longitudinal elongation of not less than 18% and a safety factor of no less than 5:1), swivel type hook in accordance with ANSI B30.10. Proof test hooks in accordance with ANSI B30.10 for a minimum of 10 minutes without deformation. Secure hook nuts to hooks by a commercial standard removable and reusable means (tack-welding is prohibited). Size hook throat opening for users needs. Provide hook with spring loaded steel safety latch for closing the hook throat opening. Do not paint or coat the hook or hook nut. Permanently mark hook and hook nut with a unique identification number traceable to each other and to the NDT certification. Locate unique hook and nut markings to be visible when the hook and nut are assembled on the hook block. Mark in a low stress area using low stress marking methods.

D102001 1.8.5 Wire Rope Sheaves

Provide forged steel sheaves. The minimum pitch diameters of running and equalizer sheaves must be in accordance with HST-4 for packaged hoist. Do not paint contact surfaces of sheaves. Machine or grind the grooves to contour and rim toughen them to not less than 320 BHN. Sheave groove depth must be not less than 1.15 times the hoisting rope

diameter. Mount all rotating sheaves on bearings.

D102001 1.8.6 Wire Rope Drum

The drum must be a one-piece steel weldment; finish-machined after all welding and stress relieving has been completed. Include in the drum integral stub shafts or shaft hubs for through shafts as required. Design the drum such that all hoisting rope is wound in a single layer. Do not mount drums in a 3 bearing configuration. Provide drums that are grooved, with grooves that are helical and machined right and left hand. Minimum drum groove depth must be .375 x rope diameter and drum groove pitch must be 1.14 x rope diameter or rope diameter plus 1/8 inch, whichever is smaller. Provide 18 times wire rope diameter for the minimum pitch diameter of drum.

D102001 1.8.7 Gearing

Provide enclosed (gear reducer) type gearing, except that the final drive may be open gearing. Do not use shafts with three or more bearing supports. Utilize standard commercial products for gear reducers. Provide enclosed reducers with a convenient means of lubricant level indication, oil sampling and draining. Provide base mounted reducers with a ball valve for draining. Hoist gearing shall be spur, helical, or herringbone type only, except for high speed gearing which shall be helical or herringbone. Provide spur gears only on open type drum gear-pinion sets (if applicable). Travel drive gearing may be spur, helical, herringbone or spiral bevel. Shaft mounted gear reducers may be used for travel and trolley drives only. Torque arms shall be other than threaded rod type and shall be designed and installed so that no eccentric loads are imposed on them. Provide enclosed gearing that complies with ANSI/AGMA 6013, 6034, or 6035, as permitted. Design open gearing in accordance with ANSI/AGMA 2001. If the design uses a drum gear, fabricate the gear to be removable from the drum. Provide guards on all gearing not enclosed in gear cases that may constitute a hazard under normal operating conditions, and include guards with provisions for lubrication and inspection.

D102001 1.8.8 Hoist Brakes

See HOISTS, in this section for hoist brake requirements by hoist type.

D102001 1.8.9 Travel Brakes

Provide powered trolley and bridge drives with end mounted electro-mechanical or pneumatic brakes that are spring applied, electrically or air pressure released. Manual and push bridges and trolleys do not require braking. Travel brakes shall have a torque rating of at least 50 percent for indoor cranes and have a torque rating of at least 100 percent for outdoor cranes. The The torque setting must be adjustable Provide brakes capable of stopping within a distance in feet equal to 10% of the rated speed in feet per minute when traveling at rated speed with rated load. Equip brakes with a manual self-return to ON brake release. Provide brake housings with easy access for wear and setting inspection.

D102001 1.8.10 Travel Drives

The bridge and trolley drives must be A-4 type.

D102001 1.8.11 Shafts, Axles, and Pins

All shafts, axles, and pins must be steel. Top running bridge and trolley axles must be of the rotating type.

D102001 1.8.12 Wheels

Underrunning wheels shall be flanged. Provide double flanged for top running bridge and trolley wheels. All wheels shall be straight tread and rolled to shape or roll forged to provide properties in congruence with ASTM A504. Do not make wheels by casting, fabrication from plate steel or hollow stamping. Rim toughen wheels that run on standard runway rails to not less than 320 BHN. Heat treat wheels that run on patented track beam to have minimum tread hardness of 375 BHN. Design bridge and trolley wheels to be compatible with their respective runway's profile. Provide wheel sizing and flange-to-rail head clearances in accordance with MH 27.1 and CMAA recommendations.

Equip bridge and trolley wheels of top running cranes and trolleys with rail sweeps. Provide a means to prevent bridge end truck and trolley from dropping more than one inch in case of wheel or axle failure.

D102001 1.8.13 Bumpers

Provide bumpers of the elastomeric, hydraulic or spring type on trolleys (or ends of bridge girders) and bridge end trucks. Design bumpers to withstand rated load at rated speed IAW AIST TR-6. Fully mate bumpers with the end stops and crane bumpers where applicable. Mount bumpers to provide proper clearance when bumpers are fully compressed. Where practical, mount bumpers to provide for easy removal of the travel wheels. Ensure trolley and bridge end truck frames are designed so that travel wheels do not contact the end stops. Design and install bumpers per the requirements of ASME B30 with a means of retaining the bumper in case of broken or loosened mounting connection(s).

D102001 1.8.14 Keys and Ketseats

Provide parallel type and machined key/keyseat assemblies. Install the key/ keyset assembly in a manner that preclude any possibility of a key shifting out of its intended position.

D102001 1.8.15 Fits

Interference fit all gears, pinions, couplings, brake drums, wire rope drums, wheels, other similar components to their respective shaft or axle. Interference fits must conform to the force fit requirements prescribed in ANSI B4.1 and must be medium drive fits unless length of engagement, material, or loading indicates otherwise. Alternatively, in bridge and trolley drives, keyless hub-to-shaft connections shall be permitted where minimum potential interface fits

capable of transmitting maximum torque (not less than 200% rated motor torque) is provided. The individual component manufacturers must endorse these interference fits. Fit bearings, bushings, and seals in accordance with the manufacturer's recommendations. Where multiple interference fitted components are installed on a single shaft from the same end, there must be clearance between each component's bore and the portion of the shaft from the installation end up to its mounting location. Fits of components within standard commercial assemblies, such as gear reducers and electric motors, must comply with the applicable industry standards or with the manufacturer's standard practice if industry standard criteria are not available.

D102001 1.8.16 Bearings

Provide anti-friction type bearings, except those subject to a small rocker motion. Use permanently lubricated sealed bearings wherever practical. Provide an easily accessible means of lubrication for bearings not considered lifetime lubricated by the manufacturer. Supply inner races for all antifriction bearings, except that bearings without inner races are permitted as part of packaged hoist unit. If a pedestal bearing is used to support the drum, the bearing housing must be steel.

D102001 1.8.17 Bushings and Thrust Washers

Fit all connections, including equalizer sheaves or bars, subject only to small rocking motion with bronze bushings and/or thrust washers, as applicable. Groove bushings to distribute lubricant.

D102001 1.8.18 Painting of System

Protect all parts of the cranes against corrosion. Clean, prime, and finish paint all surfaces normally painted at the contractor's plant as specified hereinafter. Do not paint, coat, or galvanize the following surfaces: load chain, hoisting rope, load hook, suspension hook, load hook nut, suspension hook nut, load chain sheave (sprocket), wire rope contact areas of sheaves and drum, trolley and travel wheel treads, gear teeth, load bearing surfaces of travel rails, machined surfaces that are bearing surfaces, lubrication fittings, corrosion resistant steel, bronze, anodized aluminum, name plates, flange mounting faces, other items not normally painted, and wheel tread contact surfaces of runway beams. Provide painting systems and scheme as follows:

a. Paint Systems. Provide primer coat and the finish coat of paint that is smooth, even and free of runs, sags, orange peel, or other defects. Take precautions to avoid painting surfaces specified as non-painted. Any painted over grease fittings must be replaced; they may not be cleaned and reused. Provide a painting system that consists of anti-corrosive primer and topcoat(s) appropriate for the intended environmental conditions. The primer and topcoat(s) must be compatible with each other, the substrait, and be products of the same manufacturer. Apply primer and topcoat(s) in accordance with the manufacturer's recommended process. The use of paint containing lead or mercury is prohibited. Identify the primer and finish coats

in the technical manual or drawings.

b. Painting Scheme. The painting scheme is as follows:

(1) Paint crane structural beams, hook block, and end trucks brilliant yellow.

(2) Paint sides of hook blocks to have additional gloss black diagonal safety striping.

(3) Paint faying surfaces of slip-critical structural bolted connections, both interior and exterior, with coatings as specified in RCSC Specification for Structural Joints Using High Strength Bolts".

(4) Clean and repaint any painted surfaces damaged during erection.

(5) Paint other components not specified above. The color and coating may be in accordance with the component manufacturer's standards.

D102001 1.8.19 Identification Plates

Provide two capacity plates with permanent lettering, one for each side of the bridge, monorail. Indicate the rated hoisting capacity of the hook in pound units on the plates and securely attach each plate. Size lettering to be easily read from the floor. Beneath the rated capacity the following information shall be included:

Naval Facilities Engineering Command

Contract Number

Manufacturer's name, address, crane model number and crane serial number

Voltage of AC or DC power supply, and phase and frequency of AC power supply, if applicable.

D102001 1.8.20 Direction Identification

Provide cardinal direction indication letters centered on the bottom of each trolley where space permits. Denote North, South, East, and West and reflect the travel directions given on the controller. Size lettering to be easily read from the floor.

D102001 1.8.21 Unique Identifier Tag

In accordance with DEFENSE FEDERAL ACQUISITION REGULATIONS (DFAR) 252.211-7003, assign a unique identifier to the crane. Attach the Unique Identification Tag to the outside of the main electrical disconnect panel.

D102001 1.9 ELECTRICAL DESIGN

Electrical design must conform to CMAA #70, CMAA #74, MH 27.1, ASME B30.2,

ASME B30.16, as applicable, NFPA 70, NATIONAL ELECTRICAL MANUFACTURERS' ASSOCIATION (NEMA) ICS 7, NEMA ICS 8, and other requirements specified herein. Each drive mechanism must be provided with a separate and independent drive unit with a circuit breaker branch circuit protection device capable of being locked in the open position. Design the electrical system to allow simultaneous motions of the main hoist and all traversing functions, and ancillary loads. Design the crane to operate on the designated power supply.

Provide disconnecting means for cranes and monorail hoists in accordance with NEC 610.32. Disconnecting means provided for cranes must be a lever arm type switch (rotary type switches are not acceptable) located in a separate enclosure on the crane.. Configure crane disconnects such that when the disconnect is secured, there are no energized conductors in any associated control panels.

Provide a separate runway disconnecting means in accordance with NEC 610.31. Runway disconnect switches for runways or monorails longer than 50 feet must be at the midpoint of the runway as much as possible.

Feed all control circuits from a single phase, air cooled, double-wound transformer. Furnish and install all electric drive equipment on the crane, including motors, brakes, switches, controllers, panels, items associated with the pendant, wiring system, cables, and electrification. All contactors and relays must have appropriate MOVs or R-C surge absorbers installed across the respective device's coil. Do not mix power and control cables in the same conduit in order to prevent interference where feasible.

D102001 1.9.1 Electrical Assembly

Install electrical wiring, conduit, and components in accordance with the requirements of NFPA 70. As a minimum, comply with the following items:

a. Install all electrical connections in accordance with NFPA 70 sections 110.14 or 430.9, as applicable, or as recommended by the device manufacturer.

b. If used, properly size crimped terminal lugs for the wire and install using the device(s) - e.g., crimping tool and indenter - recommended by the terminal lug manufacturer.

c. Identify all spare conductors, and insulate their ends to preclude accidental contact with energized equipment.

d. Adhesive-backed wiring tie wraps and cable-clamping devices can not be used unless they are secured with fasteners, in addition to the adhesive.

e. Bond all panel doors, back sheets, and panel boards with flexible bonding straps.

f. Remove paint from termination points, or install "cut" washers to insure proper grounding of equipment at bonding straps and equipment grounding conductors.

g. Wrap wiring around sharp edges, such as panel doors, to protect sleeves (e.g., "spiral wrap") and prevent wiring insulation damage from chafing, cutting or abrasion.

h. Control panels can not be used as raceways for conductors not terminating within the panel.

i. Use bushings or chafing protection gear on all panel conduit entries.

j. Mount only equipment that needs to be viewed or accessed from the panel door (i.e. dataloggers, key switches, pilot lights, etc.) on the panel door.

k. Tie wraps are prohibited as a permanent mounting means on festoon loops.

l. Flexible metal conduit may be used in lieu of ferrous rigid metal conduit for lengths of three feet or less when flexible connections are needed for motors and lighting.

m. Excluding conduit directly connected to dynamic breaking resistors, raceways shall maintain a 12-inch clearance between the raceway and dynamic braking resistors.

n. Route a separate grounding wire, sized in accordance with Section 250-122 of NFPA 70, with all ungrounded conductors.

o. Number or tag all wiring at all connection points.

p. Label power conductors which are shielded as to the conductor size.

q. Plug all unused conduit openings.

r. Terminate all conductors on terminal blocks; splices are not acceptable, with the following exceptions:

(1) Motor and brake connections may be made using split-bolts or lugged and connected with nuts, bolts, flat washers and lock washers in lieu of installing a terminal block in the motor connection box.

(2) Wire-nuts are not permitted except where making connections for lighting ballasts. Secure wire nut connections such that during operation of the crane they will not loosen.

(3) Provide encoder conductors with a continuous run from the encoder to the drive. Use fiber optic cable if the length of cable required between a drive and its respective encoder is longer than 150 feet.

(4) Wire terminals with more than one wire must be rated by the manufacturer for use with multiple wires.

D102001 1.9.2 Enclosures

Provide enclosures for control panels and auxiliary devices in

accordance with UL or CSA listed metallic NEMA type 12 for indoor cranes or NEMA Type 4X stainless steel for all outdoor cranes as defined by NEMA Standards Publication Number 250. Design enclosures with appropriate heating and/or cooling accessories to maintain a climate within the panel that provides an appropriate internal temperature environment for proper operation of the drives. Condensation inside the control panels is not acceptable. Provide industrial grade electrical components and located so they are easily accessible for inspection and maintenance.

D102001 1.9.3 Wiring System

Unless otherwise specified, provide interconnecting wiring of copper stranded construction complying with Table 310-13 of NFPA 70. Aluminum conductors are prohibited. Aluminum connectors are allowed if they are rated for use with copper conductors (marked AL/CU). All conductors connected to or routed above resistors must have at least 8 inches clearance, with the exception of type SA and FEPB insulation shown in NFPA 70 (National Electric Code (NEC)) Table 610-14(a) for 125Â°C maximum temperature. Size motor branch circuit conductors to have an ampacity not less than 150% of the motor full load current rating and to be no smaller than 12 AWG. Conductors must be selected and de-rated based on maximum ambient temperature. Continuous loads such as utility, heating, lighting, and air conditioning must be multiplied by 2.25 to determine ampacity in order to permit application of NFPA 70 NEC 610-14 (e) for crane supply conductors. Provide raceways of ferrous rigid metal conduit.

D102001 1.9.4 Drive Mechanism Electric Motors

Provide electric drive mechanism motors that conform to NEMA MG 1. Hoist, bridge and trolley drive motors shall be AC inverter duty, totally enclosed non-ventilated (TENV) or totally enclosed fan cooled (TEFC), squirrel cage induction type. All motors must have a 60 minute duty rating minimum. Provide motor insulation of a minimum of Class F, but with a Class B temperature rise. Furnish motors located outdoors with anti-condensation heaters.

Equip motors with thermal trip type over-temperature protection. Provide automatic resetting type temperature sensors installed integral to the motor windings. Activation of any integral motor over-temperature device energizes a red indicating FAULT light mounted on the crane and de-energizes the individual function as follows:

a. Hoists: hoisting direction only

b. Traverse Functions: motion in either direction.

The red indicating fault light remains energized until the over-temperature device resets.

D102001 1.9.5 Hoist, Trolley, Bridge Electric Controls

Comply with the following hoist, trolley and bridge controls requirements:

a. Provide static reversing, adjustable frequency controllers for all functions. Provide all controllers with a keypad or other interface allowing the end user to view/change parameters and view drive faults. Hoist drives are required to be selected such that the continuous rating of the controller is not less than 130% of the calculated motor full load current based on CMAA #70 paragraph 5.2.9.1.1.1, regardless of crane configuration, NFPA 70 NEC Table 430.250, and NEMA ICS7. Equip all hoist drives with a motor overtorque limit to lock out the hoist and prevent gross overload of the associated hoist. Set the overtorque limit such that an overload test can be performed without tripping the overtorque fault. All controllers must be from the same manufacturer. Each electric drive requires dynamic braking. Provide infinitely variable type speed control for each function. Design controls such that the maximum speed of each function is limited to 25% of rated speed when a slow speed switch is actuated on the operator's controller. Energize a yellow/amber light mounted on the crane while in slow speed mode.

b. Set all function brakes only after the associated controller decelerates the drive motor to a controlled stop. Size all controllers to provide sufficient starting torque to initiate motion of that crane drive mechanism from standstill with 0 to 131.25% of rated load on the hook and not produce any rollback. The hoist controller must enable the drive motor to develop full torque continuously at zero speed. Motors must operate smoothly at all speeds without torque pulsations, and only be energized within the frequency range of 50-60 Hz at rated speed. With respect to AC control wiring, no neutral wire shall pass through the contacts of a control relay or contactor, i.e., a device shall not be shut off or disengaged by breaking the device's neutral conductor.

D102001 1.9.6 Transients and Harmonic Protection

Provide varistors for transient protection internal to the controller. Minimum harmonics protection must consist of a reactor connected in series with each controller's line (input) terminals. Rate all reactors for continuous duty operation based upon motor nameplate amperes and design for 60 HZ operation. For a drive motor branch circuit that exceeds 100 feet in length, connect a reactor in series with the controller load (output) terminals to provide standing wave protection.

D102001 1.9.7 Drive Faults

Energize a red indicating FAULT light visible to the operator for drive faults.

D102001 1.9.8 Brake Controls

Release each drive mechanism's electro-mechanical brake only upon movement of the electric drive's controller from the OFF position and verification of motor torque, and set only after the electric drive's controller is returned to the OFF position and motors have regeneratively slowed to a controlled stop.

D102001 1.9.9 Main Line Contactors

Provide a main line contactor. Control energization of the main line contactor by a POWER-OFF/POWER-ON pushbutton on the control station. Except for the POWER OFF-POWER ON circuit, the control circuit including directional contactors must not be energized without energization of the mainline contactor. Provide black POWER-ON pushbutton and equipped with a guard to prevent accidental actuation. Provide red POWER -OFF mushroom-head pushbutton with no guard for quick and easy access.

D102001 1.9.10 Electrical Overload Protection

Protection must not be less than required by NEMA ICS 8, CMAA #70, MH 27.1, and NFPA 70. Use circuit breakers or fuses for protection. Individually protect motor branch circuits by circuit breakers capable of being locked in the open position to isolate that function without use of a portable lockout device. Caculate the circuit breaker size using the motor full load current from NEC 430, Part XIV (Tables).

D102001 1.9.11 Operator Controls

Comply with the following operator contol requirements:

a. Control cranes from a radio control station where permitted, or pendant pushbutton station if radio frequency control is not desired (see project program for control configuration). Legibly mark and arrange operator controllers in accordance with ASME B30 guidance, except label traverse functions of bridge cranes with ordinal directions (NORTH, SOUTH, EAST, WEST) to agree with direction labels on the cranes. Provide all pushbuttons and levers with spring returns to the OFF position upon operator's release. Also provide a maintained two-position selector switch for slow speed selection and an ON/OFF switch for flood lights, if equipped. Equip operator stations to accept keys enabling a user to lock out the station from use.

b. Suspend pendant pushbutton stations by a 1/8 inch minimum stainless steel wire rope strain lead from an independent festoon system. Provide strain relief hardware consisting of a stainless steel wire mesh cable grip. The pendant pushbutton station must be a rubber molded enclosure. Provide pendant cable of type SOO.

c. Include an identical back-up transmitter unit for each radio control system. Provide portable transmitters that weigh not more than eight pounds each (including the batteries and antenna), with an adjustable belt or harness to support it when worn by the operator. Ensure that only one transmitter at a time can control the crane and assure interference from one crane's controller does not affect operation of the other cranes in the building. Each transmitter includes: individual spring return joystick motion control levers for each function; a maintained contact, keyed switch, marked ON-OFF, for portable transmitter unit power; one or more LEDs indicating POWER ON, TRANSMITTING and LOW BATTERY; a red emergency STOP mushroom pushbutton; a 25% speed selector switch; a maintained switch to control the floodlights (if equipped); and a separate auxiliary pushbutton for a crane warning device (horn).

d. Design the remote radio control system to meet the requirements of NEMA ICS 8, Part 9. Each radio remote control lever must be in the OFF position before the associated crane function can begin. Choose the system frequency to be within the unlicensed FCC Part 15 range, unless licensed frequency is required by the end User. Maintain a continuous status signal between each control unit and the associated receiver. Provide a contact monitoring board with each crane radio system receiver.

e. Use rechargable type batteries in the radio transmitter. Provide a minimum of three sets of batteries(one for each transmitter plus one on recharge). There must be no significant loss in systems efficiency and function at the end of eight hours of continuous battery use. Provide a battery charger.

D102001 1.9.12 Pendant Conductor System

Operate the pendant controller on its own independent festoon system. The festoon cables must consist of flat cables suspended from carriers riding on a rigid I-beam or similar type beam. The pendant controller must be capable of traveling the entire length of the bridge. Festoon loops must not extend below the high hook position. Provide at least 20% of the conductors to be spare at the time of crane acceptance. Pendant festoon systems must move independently of the trolley.

D102001 1.9.13 Indicator Lights and Warning Devices

Comply with indicator lights and warning device requirements as follows:

a. Install indicator lights and beacons with LED type lights sized to be visible from the operator's location. Provide a white light to indicate that power is available on the load side of the crane disconnect, a blue light to indicate that the main line contactor is energized, a yellow/amber slow speed light, and a red fault warning light to indicate a drive fault or motor over-temperature. Design light to use 115 VAC voltage. Provide nameplates with lettering of sufficient size to be easily read from the floor. The nameplates must read in their respective order "POWER AVAILABLE", "POWER ON", "SLOW SPEED", and "FAULT".

b. Install a lamp test pushbutton on the outside of the control panel to allow for simultaneously energizing all lights in this section for testing purposes.

c. Provide a wind indicating device for outdoor cranes. This device must either provide a visible or audible alarm to the crane operator(s) when the wind velocity exceeds a preset limit. Assure that the chosen device does not conflict with any other previously listed indication/warning.

D102001 1.9.14 Overtravel Limit Switches

Comply with the overtravel limit switch requirements as follows:

a. See requirements in paragraph entitled HOIST for numbers and types

of overtravel limit switches required by hoist type.

b. Hoist Limit Switch Settings. Set each primary upper limit switch at the maximum practical hook height but not lower than high hook position. Set the secondary upper limit switch not lower than the hook height of the primary upper limit switch setting plus the primary runout distance, but not less than the secondary runout distance below the lowest contact point of the hoist or trolley structure (two-block condition). (The runout distances are defined as the load block maximum drift, after switch activation, in the hoisting direction at rated speed with no load on the hook. Primary and secondary runout distances are associated with the primary and secondary upper limit switches, respectively.)

c. Hoist Slow-Down Limit Switches. Slow down limit switches may be used, set below the primary upper limit switch, to automatically decrease the hoisting speed to a predetermined slow speed before tripping the primary upper limit switch. The runout distances would then be defined as the load block maximum drift, after slow down switch activation, in the hoisting direction at slow speed with no load on the hook.

D102001 1.9.15 Runway Electrification

Comply with the following runway electrification requirements

a. Provide a runway electrification system to power the crane and connect it to the crane runway disconnect. Refer to the facility final design for the length of the system. Runway electrification for crane must be of the flat festooned type or enclosed safety bar type (see project program) with four continuous copper conductors. Ground the crane through the runway electrification system. Provide electrical work in accordance with Section D50, Electrical.

b. Rigid runway electrification systems shall include all necessary hardware to the crane or monorail system from a wall or column mounted disconnect switch. Provide discreet rail type rigid runway electrification systems such that sections can be easily replaced if damaged and have insulating covers. Make outdoor rigid runway electrification systems with stainless steel or be coated specifically to prevent corrosion and use UV resistant insulating covers. Design rigid runway electrification systems for a dusty environment, consisting of three power conductors and an equipment grounding conductor. Color the ground runway conductor green, if individual conductor bars are used (not a 4-conductor system).

c. For overhead cranes, install a guard if normal crane operations could result in the hook block or wire rope contacting the conductors.

d. Provide heavy duty sliding shoe type design for collectors and specifically design to match conductor contact surface. Collector arms must be insulated, spring loaded and shall permit sufficient lateral and vertical movement to allow for imperfect track and for misalignment relative to the crane. Provide two collector shoes (tandem design) for each conductor; each collector shoe to be rated for its branch circuit current, or higher so as to provide redundancy.

e. Utilize flat cables suspended from carriers riding on an I-beam or C-track for festooned type electrification systems. Select the conductors so as to be of the longest length without splices. Fabricate conductors from copper. Provide a minimum of 20% of the festoon control circuit conductors for each electrification system to be spares at the time of crane acceptance. Festooned cable loops must not extend below the high hook position. Provide UL or CSA listed materials.

f. Size runway conductors for simultaneous motions of the main hoist plus all traverse crane functions plus any ancillary loads. When more than one crane makes use of the same runway electrification, size the system to accommodate simultaneous operations of the main hoist plus all traverse functions of all cranes at once.

D102001 1.9.16 Bridge-to-Trolley Electrification

Utilize flat cables suspended from carriers riding on an I-beam or C-track for festooned type electrification systems from bridge-to-trolley. Select the conductors so as to be of the longest length without splices. Fabricate conductors from copper. Provide a minimum of 20% of the festoon control circuit conductors for each electrification system to be spares at the time of crane acceptance. Electrically powered trolleys are required to be grounded through this conductor system. Festooned cable loops must not extend below the high hook position. Provide UL or CSA listed materials.

D102001 1.9.17 Nameplates

Provide nameplates for all electrical control equipment such as contactors, relays, transformers, etc., and all electrical panels. As a minimum, identify the associated function and system designation on each nameplate. Retain all electrical component nameplates, markings, etc. provided by the original manufacturer.

D102001 1.9.18 Electrical Outlets

For cranes with maintenance walkways, provide a minimum of one 120 VAC duplex outlet on the crane. Mount the outlet on the outside of the control panel(s). Incorporate ground-fault circuit-interrupter protection and a circuit breaker with a minimum rating of 15 amps for protection of circuit supplying receptacles.

D102001 1.9.19 Flood Lights

Provide flood lights where the crane, hoist or trolley cast a shadow on workstations. Select flood lights to match the building lighting color and intensity. Evenly space the light bulbs along the crane to provide a minimum illumination level of 50 foot-candles at three feet above the finished floor. Provide all light fixtures rated for rough service, vibration resistant, and designed to prevent any material from falling from the fixture. Equip the lights with safety cables to prevent the fixtures from falling to the floor if dropped while being serviced. For cranes with maintenance walkways, locate the lights to be serviceable from the walkway(s). Provide a switch on the operator's controller to operate the floodlights.

D102001 1.9.20 Capacity Overload Protection

Provide overload limiting for each hoist motor circuit separate from the hoist drive overtorque limit specified in paragraph above entitled HOIST, TROLLEY, BRIDGE CONTROLS. The device must have a maintained keyed override located on the control panel that can be deactivated during overload testing. When an overload is detected limit the hoist function to the lowering direction only. Resetting of the overload shall only be accomplished by moving the hoist in the down direction or by cycling power. Initially set the overload limit at 100% and ensure that it is adjustable from 80% to 150% of rated capacity.

D102001 1.9.21 Hour Meter

Provide a non-resettable hour meter, connected across the main line contactor, readable from the exterior of the main control panel, to indicate the elapsed number of hours the crane is energised. Additionally provide non-resettable hour meters for each function, readable from the exterior of the main control panel, connected to each function's brake contactors to indicate the running time of each individual function.

D102001 1.10 PNEUMATIC DESIGN

Pneumatic design must conform to CMAA #70, MH 27.1, ASME B30.2, ASME B30.16, ASME HST-5, ASME HST-6 as applicable, and other requirements specified herein. The pneumatic power for the crane must be fed from a junction with a quarter-turn to off valve, accessible to the crane or monorail system operator, capable of being locked in the off position. Disconnect valves for runways or monorails longer than 50 feet must be at the midpoint of the runway as much as possible. The pneumatic supply system must have capacity to allow simultaneous motions of all hoisting and traversing functions. Design the crane to operate on the designated pressure and flow rate. Configure disconnect valves such that when a valve is secured, there are no other sources of air supply to any part of the crane.

D102001 1.10.1 Pneumatic Assembly

Perform Installation of all pneumatic piping and components as stated below:

a. Install all pneumatic piping and connections as recommended by the device manufacturer.

b. Use rigid metal piping of the correct pressure rating for all piping runs. Flexible lines may be used in lieu of rigid metal piping for lengths of three feet or less when flexible connections are needed between components. Flexible lines must be rated for the system pressure.

c. Number or tag piping at all connection points.

d. Presure test piping runs to ensure that they are free of leaks prior to connection to cranes.

e. Provide system fittings, piping and connectors exposed to the

outdoor environment of corrosion resistant material.

D102001 1.10.2 Drive Mechanism Pneumatic Motors

Provide pneumatic drive mechanism motors with adequate power and starting torque and operate without perceptible vibration at any of the hoist loads or speeds within the rated load and speed capacity. The hoist motor may be either axial piston or rotary vane type.

D102001 1.10.3 Overload Protection

Equip the hoist with overload protection to prevent gross overload and any resulting damage to the crane or monorail system. The device must allow load testing at up to 131.25% of rated capacity. If adjustable, initially set the overload limit at 100% of rated capacity. Limit hoist operation to the lowering direction only when an overload occurs.

D102001 1.10.4 Operator Controls

Comply with the following operator control requirements:

a. Provide an operator station suspended from the hoist/trolley unit. Pull cord or rod controls are not desired. Legibly mark and arrange control stations functions in accordance with ASME B30 guidance, except that traverse functions of OETs are labeled with ordinal directions (NORTH, SOUTH, EAST, WEST) to agree with direction labels on the cranes. Spring return all levers to the OFF position upon operator's release.

b. Suspend operator station by a 1/8 inch minimum stainless steel wire rope from the hoist/trolley unit structure.

D102001 1.10.5 Overtravel Limit Switches

Provide a lift limiting device so that the load hook, either loaded or empty, at any operating speed, will not allow the load block to contact the hoist frame. Install a stop or other device to prevent the load hook from being lowered beyond the hoist design limit of travel.

D102001 1.10.6 Runway Air Supply

Comply with the following runway air supply requirements:

a. Provide a runway air supply system, including retractable hose reel, to power the crane and connect it to the crane runway disconnect. Refer to the Project Program for the operating length of the system.

b. Pneumatic supply emergency shut-off devices must be readily accessible from the floor, and located within proximity to the crane runway, monorail track system.

c. Size runway air supply piping for simultaneous motions of all crane functions plus any ancillary loads. When more than one crane makes use of the same runway air supply, size the system to accommodate

simultaneous operations of all functions of all cranes at once.

D102001 1.10.7 Nameplates

Provide nameplates for all pneumatic control equipment. As a minimum, identify the associated functions and system designations on each nameplate. Retain all pneumatic component nameplates, markings, etc. provided by the original manufacturer.

D102001 1.10.8 Hour Meter

Provide a non-resettable meter in the air supply calibrated to indicate the elapsed number of hours the crane is operating.

D102001 1.10.9 Pressure and Flow Regulation

Provide a device to limit inlet pressure and air flow in line between the air supply and the crane air inlet, mounted at the level of the hoist. The device(s) must ensure pressure does not exceed the rated pressure at the hoist and that the crane or monorail system functions at the desired speed and capacities. The device must allow sufficient air flow and pressure to operate the brake release mechanism.

D102001 1.10.10 Moisture Separator/ Oiler

Provide a device in the supply line to the crane or monorail to remove moisture and add lubrication to the incoming air supply.

D102002 OVERHEAD CRANES

In accordance with the project program, provide an overhead top running multiple girder bridge cranes, single girder top running bridge crane, single girder underrunning bridge crane, monorail system, or hoist with the required equipment quantity, span, runway length, capacity and hook height needed to fulfill the mission of the end user.

D102002 1.1 TOPRUNNING MULTIPLE GIRDER CRANE

Provide a top running multiple girder crane with hoist and trolley complete, tested and ready for operation. The crane, hoist and trolley must be electrically, pneumatically or manually powered in compliance with the Project Program. Crane, hoist, trolley, equipment, materials, installation, examination, inspection, and workmanship must meet the applicable requirements of ASME B30.2 and CMAA 70, Class C minimum, as modified and supplemented by this specification. Provide the following girder crane components in addition to the general requirements of the paragraphs entitled BASIC REQUIREMENTS FOR CRANES OR MONORAILS WITH HOISTS/TROLLEYS above.

D102002 1.1.1 Bridge Girders

Provide welded box section type bridge girders for spans greater than 40 feet. For spans less than 40 feet, open web girders may be used. Minimize splices in the bridge girder and avoid splices in locations of high stress. Provide full penetration welds at splices. Design bridge girders to be end notched to fit over the end truck.

D102002 1.1.2 Bridge Rails

Select bridge rails from the sizes listed in CMAA #70, Table 4.13.3-4; Do not use solid stock material (square, round or rectangular) for bridge rails. Select the rails so that the allowable wheel loads are not exceeded by the design rated load on the hoist. Attach the rails to the bridge girders with pairs of adjustable rail clips spaced not more than 36 inches apart designed per the wheel loading design. Secure the rail clips to the top flange of the bridge girder by welding. If rail joints cannot be avoided due to the length of the span, the joints shall be staggered and located directly over girder diaphragms. Provide rail joint gaps less than 1/32 of an inch. Weld creep bars in place at each end of the rail. Locate bridge rails above the shear center of the girder.

D102002 1.1.3 Walkways

Where necessary to access maintainable features, provide full length maintenance walkways on both girders with crossovers at the end trucks to allow movement between girders. At least one walkway shall have a means of boarding the crane and shall match the elevation and position of the access platforms located in the building.

D102002 1.1.4 Hoist and Trolley

Provide electric, air-powered, or manual hoist and trolley in compliance with the general requirements of paragraphs entitled BASIC REQUIREMENTS FOR CRANES OR MONORAILS WITH HOISTS/TROLLEYS above and the specific requirements of HOISTS below.

D102002 1.1.5 Bridge and Trolley End Trucks

Provide end trucks of box section design with wheels centered between the webs. Commercially available end trucks that are not box section may be used for bridge spans less than 40 feet. Equip end trucks for the bridge and trolley with rail sweeps that conform to ASME B30.2 extending below the rail head designed to move an obstruction.

D102002 1.1.6 Drop Lugs

Provide safety lugs or drop lugs to prevent bridge and trolley end trucks from dropping more than one inch or derailing in the event of wheel or axle failure.

D102002 1.1.7 End Stops

Provide end stops on the building runway and bridge girders designed and installed in accordance with AIST TR-13 to resist crane bumper and trolley bumper dynamic forces specified in AIST TR-6. Do not bolt end stops to the bridge rails.

D102002 1.1.8 Major Component Attachments for Lifting and Handling

Design and fabricate major components (e.g. bridge girders, end trucks, and trolleys) with structural or mechanical attachment points (lifting lugs, safety hoist rings, hoist rings or approved equivalent)

when they are to be lifted or handled by suspended rigging.

D102002 1.2 TOP RUNNING BRIDGE, UNDERRUNNING HOIST SINGLE GIRDER CRANE

Provide a top running bridge, underrunning hoist/trolley crane with hoist and trolley complete, tested and ready for operation. The crane, hoist and trolley must be electrically, pneumatically or manually powered in compliance with the Project Program. Crane, hoist, trolley, equipment, materials, design, installation, examination, inspection, and workmanship must be in accordance with the applicable requirements, (shall statements) and recommendations (should statements), ASME B30.17, and MH 27.1, Duty Class C, as modified and supplemented by this specification. Provide the following bridge/ girder crane components in addition to the general requirements of the paragraphs entitled BASIC REQUIREMENTS FOR CRANES OR MONORAILS WITH HOISTS/TROLLEYS above.

D102002 1.2.1 Bridge Girder

Provide bridge girders for single girder cranes not to exceed 50 feet in any single span. Provide a bridge girder of specially designed trackage in accordance with MH 27.1 Duty Class C, e.g., patented track beam constructed from welded steel components. Minimize splices in the bridge girder and avoid splices in locations of high stress. Provide full penetration welds at splices. Design bridge girders to be end notched to fit over the end truck.

D102002 1.2.2 Hoist and Trolley

Provide electric, air-powered, or manual hoist and trolley in compliance with the general requirements of the paragraphs entitled BASIC REQUIREMENTS FOR CRANES OR MONORAILS WITH HOISTS/TROLLEYS above and the specific requirements of HOISTS below.

D102002 1.2.3 Bridge End Trucks

Provide end trucks of box section design with wheels centered between the webs except that commercially available end trucks that are not box section may be used for bridge spans less than 40 feet. Equip end trucks with rail sweeps that conform to ASME B30.17 extending below the rail head designed to move an obstruction.

D102002 1.2.4 Drop Lugs

Provide safety lugs or drop lugs or a functionally equivalent feature on the trolley frame and end truck frames to prevent a drop of more than one inch in the event of wheel or axle failure.

D102002 1.2.5 Trolley Stops

Provide extended wrap-around trolley frame plates or similar to contact the end stops. The trolley wheels shall not contact the end stops.

D102002 1.2.6 End Stops

Provide end stops on the bridge runway designed and installed in

accordance with AIST TR-13 to resist crane bumper dynamic forces specified in AIST TR-6. Trolley end stops may be the standard product of the bridge girder manufacturer.

D102002 1.2.7 Major Components Attachments for Lifting and Handling

Design and fabricate major components (e.g. bridge girders, end trucks, and trolleys) with structural or mechanical attachment points (lifting lugs, safety hoist rings, hoist rings or approved equivalent) when they are to be lifted or handled by suspended rigging

D102002 1.3 UNDERRUNNING BRIDGE, UNDERUNNING HOIST, SINGLE GIRDER CRANE

Provide an underrunning single girder bridge crane with underrunning hoist and trolley complete, tested and ready for operation. The crane, hoist and trolley must be electrically, pneumatically or manually powered in compliance with the Project Program. Crane, hoist, trolley (carrier), end trucks, equipment, materials, installation, examination, inspection, and workmanship must be in accordance with the applicable requirements of ASME B30.11, and MH 27.1, Duty Class C, as modified and supplemented by this specification. Crane girder and runway tracks must be patented track. Provide the following bridge/girder crane components in addition to the general requirements in the paragraphs entitled BASIC REQUIREMENTS FOR CRANES OR MONORAILS WITH HOISTS/TROLLEYS components above.

D102002 1.3.1 Bridge Girder

Provide bridge girders for single girder cranes not exceed 50 feet (except top running multiple girder cranes) in any single span. Provide a bridge girder of specially designed trackage in accordance with MH 27.1 Duty Class C, e.g., patented track beam constructed from welded steel components. Minimize splices in the bridge girder and avoid splices in locations of high stress. Provide full penetration welds at splices.

D102002 1.3.2 Runway Rails

Provide runway rails in accordance with MH 27.1 of length and span to meet the requirements of the facility final design. Attachment to overhead structures or building columns must be as shown in the Project Program without exceeding design loads.

D102002 1.3.3 Hoist and Trolley

Provide electric, air-powered, or manual hoist and trolley in compliance with the general requirements of the paragraphs entitled BASIC REQUIREMENTS FOR CRANES OR MONORAILS WITH HOISTS/TROLLEYS above and the specific requirements **HOISTS** below.

D102002 1.3.4 Drop Lugs

Provide safety lugs or drop lugs or a functionally equivalent feature on the trolley frame and end truck frames to prevent a load drop of more than one inch or derailing in the event of wheel or axle failure.

D102002 1.3.5 Stops

Provide extended wrap-around trolley frame plates or similar to contact the trolley end stops. The trolley wheels shall not contact the end stops. End stops on the bridge and trolley runway may be the standard product of the runway and bridge girder manufacturer.

D102003 MONORAILS

Provide a monorail system with hoist and trolley complete, tested and ready for operation. The hoist and trolley must be electric, pneumatic, manual or push operation as indicated in the Project Program. Crane, hoist, trolley, equipment, materials, installation, examination, inspection, and workmanship must be in accordance with the applicable requirements of ASME B30.11 and MH 27.1, Duty Class C, as modified and supplemented by this RFP. Monorail must be patented track. In addition to the general requirements of the paragraphs entitled BASIC REQUIREMENTS FOR CRANES OR MONORAILS WITH HOISTS/TROLLEYS above, the following design requirements apply:

D102003 1.1 HOIST AND TROLLEY

Provide electric, air-powered, or manual hoist and trolley in compliance with general requirements of the paragraphs entitled BASIC REQUIREMENTS FOR CRANES OR MONORAILS WITH HOISTS/TROLLEYS above and the specific requirements of HOIST below.

D102003 1.2 MONORAIL BEAM

Provide the monorail beam of specially designed trackage in accordance with MH 27.1 Duty Class C, e.g., patented track beam. Provide standard catalog devices for connection of the track to the indicated supporting structures. If track manufacturer's catalog devices are not provided for this suspension system, complete shop drawings and calculations for each custom suspension device must be submitted for review.

D102003 1.3 DROP LUGS

Provide safety lugs (drop stops) or a functionally equivalent feature on the trolley frame to limit trolley drop to 1 inch in the event of wheel or axle failure.

D102003 1.4 TROLLEY STOPS

Provide trolley stops to stop trolley motion at both ends of the monorail. Extended wrap-around trolley frame plates or similar to contact the end stops. The trolley wheels shall not contact the end stops.

D102003 1.5 END STOPS

End stops may be the standard design of the monorail manufacturer.

D102004 HOIST

Comply with the packaged hoist units design requirements of ASME HST-1 (electric chain), HST-2 (hand chain), HST-4 electric wire rope), HST-5 (pneumatic chain) or HST-6 (pneumatic wire rope), with modifications as specified herein. Comply with the safety requirements of ASME B30.16 on all hoists.

D102004 1.1 CAPACITY

Provide the hoist minimum rated load capacity as required by the Project Program. Mark the hoist capacity in pounds on both sides of the hoist or load block. Size lettering to be easily read from the floor.

D102004 1.2 ELECTRIC POWERED WIRE ROPE HOIST(S)

Provide electric wire rope hoists to comply with "should" and "shall" statements of AMERICAN NATIONAL STANDARDS INSTITUTE (ANSI) B30.16 and ASME HST-4, Class H3 or higher, except as modified and supplemented herein. Provide double-reeved wire rope type hoist reeving systems.

D102004 1.2.1 Hoist Brakes

Equip each hoist with one electro-mechanical brake plus a mechanical load brake, each with a minimum torque rating of 131.25% of the rated motor torque. Provide adjustable brake torque settings on the electro-mechanical brakes. The electromechanical brake and mechanical load brake each must be able to independently stop and hold the maximum test load. Electro-mechanical hoist brakes must be provided with a manual, self-return to ON, release mechanism. Maintained OFF, release mechanisms are not permitted. Design all electro-mechanical hoist brakes to permit easy access for inspection and adjustment.

D102004 1.2.2 Hoist Limits

Provide electric powered wire rope hoist(s) limits as follows:

a. Provide two upper limit switches. Provide geared control circuit type primary switches (rope guide actuated limit switches are not acceptable). When the primary upper limit is reached, the operator must still be able to lower the block out of the upper limit switch. Lowering of the block must automatically reset the primary limit switch. The hoist secondary upper limit switch must be a mechanical block actuated control circuit type limit switch. The block actuated switch must remove all power from the affected hoist drive motor and brake independent of the hoist drive controller, utilizing a hoist line contactor, and set the brake when the secondary upper limit is reached. Provide a spring-returned three position keyed bypass switch on the hoist control panel to bypass the hoist limits. The far right position must allow resetting of the secondary upper limit switch prior to resuming operation. During resetting of the secondary limit, the hoist must operate in the lowering direction only. The far left position must allow bypassing of the primary upper limit switch to allow the secondary limit switch to be tested on a periodic basis. The center position of the bypass switch must be the NORMAL position with neither upper limit being bypassed.
b. Provide a geared control circuit type hoist lower limit switch. When the lower limit is reached, the operator must still be able to raise the block. Automatically reset the limit switch when the block is raised.

D102004 1.3 ELECTRIC POWERED CHAIN HOIST(S)

Provide electric powered chain hoists to comply with "should" and "shall" statements of AMERICAN NATIONAL STANDARDS INSTITUTE (ANSI) B30.16 and ASME HST-1, Class H3 or higher, except as modified herein and supplemented herein.

D102004 1.3.1 Hoist Brakes

Equip the hoist with one electro-mechanical brake plus a mechanical load brake, each with a minimum torque rating of 131.25% of the rated motor torque. Provide adjustable brake torque setting on electro-mechanical brakes. The electromechanical brake and mechanical load brake each must be able to independently stop and hold the maximum test load. Provide electro-mechanical hoist brakes with a manual, self-return to ON, release mechanism. Maintained OFF, release mechanisms are not permitted. Design all electro-mechanical hoist brakes to permit easy access for inspection and adjustment.

D102004 1.3.2 Chain Container

Equip chain hoists of 10 foot (3 meters) lift or more with a fabric or corrosion resistant metal load chain container.

D102004 1.3.3 Overtravel Limits

Provide a mechanical block actuated control circuit type upper limit switch or a chain stop with a geared upper limit switch to prevent two blocking of the hoist.

D102004 1.3.3.1 Block Actuated Switch

Provide a block actuated switch that does the following:

a. Remove all power from the affected hoist drive motor and brake independent of the hoist drive controller, utilizing a hoist line contactor, and set the hoist brake.
b. Include a spring-returned reset switch on the operator's controller to allow resetting the switch to resume hoist operation. When the spring-returned switch is activated but prior to exiting the limit switch, the hoist must operate only in the lowering direction.

D102004 1.3.3.2 Geared Upper Limit Switch

Provide a geared upper limit switch that does the following:

a. Provide a control circuit type and when reached, allow the operator to lower the block out of the limit. Automatically reset the limit switch when the block is lowered.
b. b. Include a spring-returned keyed bypass switch on the hoist control panel to bypass the limit for functional testing of the chain stop.

D102004 1.3.3.3 Geared Lower Limit Switch

Provide a geared control circuit type hoist lower limit switch or chain stop. When the lower limit is reached, the operator must still be able to raise the block. Automatically reset the limit switch when the block is raised. If a geared lower limit switch is provided, then a chain stop is still required to prevent the load chain from running out of the hoist at its fully extended position.

D102004 1.4 PNEUMATIC POWERED WIRE ROPE HOIST(S)

Provide pneumatic powered wire rope hoists that comply with all "should" and "shall" statements of AMERICAN NATIONAL STANDARDS INSTITUTE (ANSI) B30.16 and ASME HST-6 Duty Class A4. Provide double-reeved wire rope hoist type reeving system.

D102004 1.4.1 Hoist Brakes

Equip the hoist with a braking system that can stop and hold 131.25% of the rated hoist capacity. The hoist braking system must be able to prevent uncontrolled lowering of the load in the event of a loss of air supply. Provide hoist brakes with a manual, self-return to ON, release mechanism. Maintained OFF, release mechanisms are not permitted. Design hoist brakes to permit easy access for inspection and adjustment.

D102004 1.5 PNEUMATIC POWERED CHAIN HOIST(S)

Provide hoist or hoist/trolley unit that complies with all "should" and "shall" statements of AMERICAN NATIONAL STANDARDS INSTITUTE (ANSI) B30.16 and the American Society of Mechanical Engineers (ASME) HST-5, Duty Cycle A4.

D102004 1.5.1 Hoist Brake

Design the hoist braking system to prevents an uncontrolled lowering of the load in the event of a loss of air supply, and can stop and hold 131.25% of rated capacity. Provide hoist brakes with a manual, self-return to ON, and release mechanism. Maintained OFF, release mechanisms are not permitted. Design hoist brakes to permit easy access for inspection and adjustment.

D102004 1.5.2 Chain Container

Equip chain hoists of 10 foot (3 meters) lift or more with a fabric or corrosion resistant metal load chain container

D102004 1.6 MANUAL HOIST WITH TROLLEY

Provide hoist or hoist/trolley unit that complies with all "should" and "shall" statements of AMERICAN NATIONAL STANDARDS INSTITUTE (ANSI) B30.16 and ASME HST-2.

D102004 1.6.1 Hoist Brake

Provide a hoist mechanical load brake that can stop and hold 131.25% of rated capacity.

D102004 1.6.2 Chain Container

Equip chain hoists of 10 foot (3 meters) lift or more with a fabric or corrosion resistant metal load chain container

D102004 1.6.3 Hoist Overload Limiting Device

Equip the hoist with a means to prevent destructive overloads.

D1030 ESCALATORS AND MOVING WALKS

Comply with ASME A17.1 and ASME A17.2.

D103001 ESCALATORS

Comply with ASME A17.1 and ASME A17.2.

D103002 MOVING WALKS

Comply with ASME A17.1 and ASME A17.2.

D109002 CONVEYORS

Comply with ASME B20.1, *Safety Standards for Conveyors and Related Equipment*.

THIS PAGE HAS BEEN INTENTIONALLY LEFT BLANK

SECTION D20

PLUMBING
11/10

D20 GENERAL

RFP Part 3 including the Engineering System Requirements (ESR) provide project specific requirements. The RFP Part 4, Performance Technical Sections (PTS) provide generalized technical requirements that apply to multiple facility types and include more requirements than are applicable to any one project. Therefore, only the RFP Part 4 requirements that apply to the project and further define the RFP Part 3 project specific requirements are required.

D20 1.1 NARRATIVE

This section must be used in conjunction with all parts of the Design Build (D/B) Request for Proposal (RFP) to determine the full requirements of this solicitation.

This section includes the construction of interior plumbing systems. This section covers installations inside the facility and out to the five foot line. See Section G30, *Site Mechanical Utilities*, for continuation of systems beyond the five foot line.

D20 1.2 PLUMBING DESIGN GUIDANCE

Provide the design and installation in accordance with the following references. This Performance Technical Specification (PTS) adds clarification to the fundamental requirements contained in the following Government Standards. The general requirements of this PTS section are located in PTS Section Z10, *General Performance Technical Specification*.

D20 1.2.1 Government Standards

Federal Energy Management Program (FEMP)

UNIFIED FACILITIES CRITERIA (UFC)

UFC 1-200-01	General Building Requirements(A reference in this PTS section to UFC 1-200-01 requires compliance with the Tri-Service Core UFCs that are listed in UFGS Section 01 33 10.05 20, which includes the following significant UFC(s):UFC 3-400-10N, Mechanical EngineeringUFC 3-420-01, Design: Plumbing Systems)

D20 1.3 DESIGN SUBMITTALS

Design Submittals shall be in accordance with Z10, *General Performance Technical Specifications*, UFGS section 01 33 10.05 20, *Design Submittal*

Procedures, UFC 1-300-09N, *Design Procedures*and UFC 3-400-10N, *Mechanical Engineering*.

D20 1.4 CONSTRUCTION SUBMITTALS

Submit construction submittals in accordance with PTS section Z10, *General Performance Technical Specifications*. In addition to the Z10 requirements, the Designer of Record (DOR) shall approve the following construction submittals as a minimum:

Fixtures, equipment, and OMSI information for all equipment and fixtures.

D2010 PLUMBING FIXTURES

Plumbing fixtures shall be provided in accordance with the IBC, IPC, and as specified. Provide EPA's "WaterSense" labeled fixtures where available.

D201001 WATER CLOSETS

D201001 1.1 FLUSH VALVE WATER CLOSETS

ASME A112.19.2, white vitreous china, siphon jet. Provide ASME A112.19.5 trim. Provide self-closing metering type flush valve, unless electronic flush control is specified in the ESR Section D20. Electronic flush control shall conform to UL 1951 and ASSE 1037. Flush valve shall not exceed 1.28 GPF (4.8 LPF). Handicapped fixture mounting height and appurtenances shall be in accordance with UFAS and ADAAG.

D201001 1.2 DUAL FUNCTION FLUSH VALVE WATER CLOSETS

ASME A112.19.2, white vitreous china, siphon jet. Provide ASME A112.19.5 trim. Provide self-closing metering type dual function flush valve, unless electronic flush control is specified in the ESR Section D20. Electronic flush control shall conform to UL 1951 and ASSE 1037. Dual function flush valve shall provide a flush of 0.8 to 1.1 GPF (3.0 to 4.2 LPF) or 1.28 GPF (4.8 LPF). Maximum flush volume shall not exceed 1.28 GPF (4.8 LPF). Handicapped fixture mounting height and appurtenances shall be in accordance with UFAS and ADAAG.

D201001 1.3 FLUSH TANK WATER CLOSETS

ASME A112.19.2, white vitreous china, siphon jet. EPA "WaterSense" labeled. Provide ASME A112.19.5 trim. Water flushing volume of the water closet shall not exceed 1.28 GPF (4.8 LPF). Handicapped fixture mounting height and appurtenances shall be in accordance with UFAS and ADAAG.

D201001 1.4 DUAL FUNCTION FLUSH TANK WATER CLOSETS

ASME A112.19.2, white vitereous china, siphon jet. Provide ASME A112.19.5 trim. Dual function flush tank water closet shall provide a dual flush that allows a flush of 0.8 to 1.1 GPF (3.0 to 1.6 LPF) or 1.28 GPF (4.8 LPF). Maximum flush tank volume per flush shall not exceed 1.28 GPF (4.8 LPF). Handicapped fixture mounting height and appurtenances shall be in accordance with UFAS and ADAAG.

D201002 URINALS

D201002 1.1 FLUSH VALVE URINALS

ASME A112.19.2, white vitreous china, wall-mounted, wall outlet, siphon jet, integral trap, extended side shields. EPA "WaterSense" labeled. Provide large diaphragm (not less than 2.625 inches (66 mm) upper chamber inside diameter at the point where the diaphragm is sealed between the upper and lower chambers) flush valve of chrome plated cast brass conforming to ASTM B 584, including vacuum breaker and angle (control-stop) valve. Maximum flush valve volume per flush shall not exceed 0.5 gallons per flush (1.9 lpf). Provide ASME A112.19.5 trim and ASME 112.6.1M concealed chair carriers. Provide self-closing metering type flush valve, unless electronic flush control is specified in the ESR Section D20. Electronic flush control shall conform to UL 1951 and ASSE 1037.Handicapped fixture mounting height and appurtenances shall be in accordance with UFAS and ADAAG.

D201002 1.2 NON WATER USE URINALS

ASME A112.19.2, white vitreous china, wall-mounted, wall outlet, non-water using, integral drain line connection, with sealed replaceable cartridge or integral liquid seal trap insert. The urinal and trap assembly shall maintain a sufficient barrier of a biodegradable immiscible liquid to provide the trap seal and inhibit the backflow of sewer gases. For urinals that use a replaceable cartridge, provide four additional cartridges for each urinal installed. Provide an additional quart of biodegradable liquid for each urinal installed. Provide ASME A112.6.1M concealed chair carriers. Installation and testing shall be in accordance with the manufacturers’ recommendations. Drain lines that connect to the urinal outlet shall not be made of copper tube or pipe. Urinal design and installation shall be ADA compliant. Slope the sanitary sewer branch line for non-water use urinals a minimum of 1/4-inch per foot. Manufacturer shall provide an operating manual and on-site training for the proper care and maintenance of the urinal.

D201003 LAVATORIES

D201003 1.1 COUNTERTOP LAVATORIES

Unless integral bowl is specified elsewhere, lavatories shall be white, ASME A112.19.2 vitreous china lavatories with minimum dimensions of 20 inches (508 mm) wide x 18 inches (457 mm) front to rear, and self-rimming type. Provide ASME 112.18.1 copper alloy centerset faucets unless self closing metering or electronic control is specified in ESR section D20. Faucets shall be EPA "WaterSense" labeled. Provide with aerator, adjustable P-traps, and perforated grid strainers, unless pop-up drain fittings are specified in ESR section D20.

D201003 1.2 WALL-MOUNTED LAVATORIES

ASME A112.19.1, white enameled cast-iron or ASME A112.19.2 white vitreous china with ASME A112.6.1M concealed arm carrier support, with minimum dimensions of 20 inches wide by 18 inches (508 mm wide by 457 mm) front to rear. Provide ASME 112.18.1 copper alloy centerset faucets unless self closing metering or electronic control is specified in ESR section D20. Faucets shall be EPA "WaterSense" labeled. Provide with aerator, adjustable P-traps, and perforated grid strainers, unless pop-up drain

fittings are specified in ESR section D20.

D201003 1.3 HANDICAPPED LAVATORIES

Same as Paragraphs 1.1 or 1.2, except height and appurtenances shall be in accordance with UFAS and ADAAG.

D201004 SINKS

D201004 1.1 COUNTERTOP SINKS

ASME A112.19.3 sink, 20 gage stainless steel with integral mounting rim, minimum dimensions of 33 inches (840 mm) wide for two compartment or 21 inches (560 mm) wide for one compartment by 21 inches (560 mm) front to rear, with ledge back and undersides coated with sound dampening material. Provide top-mounted ASME A112.18.1 copper alloy faucets, swing spout with aerator, and stainless steel drain outlets with cup strainers. Provide adjustable P-trap with drain piping to vertical vent stack. If specified in ESR section D20, provide UL 430 waste disposer unit in right compartment.

D201004 1.2 SERVICE SINKS

ASME A112.19.1, white enameled cast-iron or ASME A112.19.2 white vitreous china, wall mounted and floor supported by wall outlet cast-iron P-trap, minimum dimensions of 22 inches (560 mm) wide by 18 inches (457 mm) front to rear with 9 inch (230 mm) splashback, and stainless steel rim guard. Provide ASME A112.18.1 copper alloy back-mounted combination faucets with vacuum breaker and 0.75 inch (20 mm) external hose threads.

D201004 1.3 MOP SINKS

Pre-cast terrazzo floor-mounted mop sink, 36 inches x 36 inches x 12 inches (914 mm x 914 mm x 305 mm) shall be made of marble chips cast in white Portland cement to a compressive strength of not less than 3625 PSI (25 mPa) 7 days after casting. Provide brass body drains with nickel bronze strainers cast integral with terrazzo. Provide stainless steel rim guard for mop sink. Provide chrome-plated exposed hot and cold water faucets ASME A112.18.1 wall-mounted copper alloy faucets swing spout with 3/4 inch (20 mm) hose connection, vacuum breaker, and pail hook. Provide mop hanger on wall above sink suitable for four mops.

D201004 1.4 LAUNDRY SINKS

IAPMO Z124.6, plastic, two compartment, minimum dimensions of 40 inches wide by 21 inches (1016 mm wide by 533 mm) front to rear, with floor-supported steel mounting frame secured to wall. Provide ASME A112.18.1 copper alloy centerset faucets, swing spout with aerator, and stainless steel drain outlets with cup strainers, and 1.5 inch (40 mm) adjustable P-trap with drain piping to vertical vent stack.

D201005 SHOWERS/TUBS

D201005 1.1 ONE PIECE BATH AND SHOWER MODULES

IAPMO Z124.1.2, made of white fiberglass reinforced plastic (FRP) or acrylic with slip-resistant bathing surfaces, integral grab bar, and three walls

integrally molded in one piece. Provide outlet at left or right as necessary to suit module arrangement. Provide pop-up drain fittings and adjustable P-trap. Bathtub and shower supply fittings shall be diverter type with body mounted from behind the wall. Provide tub fill over-rim spout with diverter.

D201005 1.2 SHOWER FLOORS

Precast terrazzo or Acrylic Shower Floors: Terrazzo shall be made of marble chips cast in white Portland cement to produce a compressive strength of not less than 3625 psi (25 MPa) 7 days after casting. Provide brass body drains with nickel bronze strainers cast integral with terrazzo.

D201005 1.3 BATHTUBS

ASME A112.19.1 white enameled cast-iron or porcelain steel bathtubs, recessed type, minimum dimensions of 56 inches (1424 mm) wide by 30 inches (762 mm) front to rear by 16 inches (406 mm) high with drain outlet for above-the-floor drain installation. Bathtub and shower supply fittings shall be diverter type with body mounted from behind the wall. Provide tub over fill rim spout with diverter.

D201005 1.4 SHOWER SUPPLY FITTINGS

ASME A112.18.1, ball joint, self-cleaning, adjustable spray pattern shower heads, connected to concealed pipe connected to copper alloy pressure balance single control type mixing valves with front access integral screwdriver stops. Showerhead shall be EPA "WateSense" labeled. Anchor the mixing valves and the pipe to each showerhead in wall to prevent movement.

D201005 1.5 HANDHELD SHOWER HEAD

ASSE 1014, adjustable spray hand-held shower head with swivel fitting, 60 inch (1524 mm) minimum flexible chrome plated copper alloy hose and in-line vacuum breaker. Provide push button flow control if specified in ESR section D20. Provide 25 inch (635 mm) grab bar with sliding spray holder that locks at any height.

D201006 DRINKING FOUNTAINS AND COOLERS

D201006 1.1 DRINKING FOUNTAINS

Wall mounted drinking fountain shall be constructed of white enameled cast iron with bubbler and push button control. Handicapped fixture mounting height and appurtenances shall be in accordance with UFAS and ADAAG.

D201006 1.2 ELECTRIC WATER COOLERS

AHRI 1010, wall-mounted, bubbler style, air-cooled condensing unit, 4.0 gph (4.20 mL per second) minimum capacity, stainless steel splash receptor, double wall heat exchanger, and all stainless steel cabinet. Provide ASME A112.6.1M concealed wall hangers with thru-bolts and back plates. Handicapped fixture mounting height and appurtenances shall be in accordance with UFAS and ADAAG.

D201090 EMERGENCY FIXTURES

Pressure-compensated tempering valve is required for emergency fixtures, with leaving water temperature setpoint adjustable throughout the range 60 to 95 degrees F (15.5 and 35 degrees C) unless cold water supply meets temperature criteria.

Where indicated in ESR section D20, provide packaged, UL listed, alarm system; including an amber strobe lamp, horn with externally adjustable loudness and horn silencing switch, mounting hardware, and waterflow switch, assembled and prewired for waterproof service within NEMA Type 3 or 4 enclosures or for explosion proof service within NEMA Type 7 or 9 enclosures.

D201090 1.1 EMERGENCY SHOWER

ISEA Z358.1, wall-mounted self-cleaning, non-clogging 10 inch (250 mm) diameter stainless steel deluge shower head with elbow, one inch (25 mm) full-flow stay-open ball valve with pull rod and 8 inch (200 mm) diameter ring or triangular handle, one inch (25 mm) interconnecting fittings.

D201090 1.2 EMERGENCY EYE & FACE WASH

ISEA Z358.1, wall-mounted self-cleaning, non-clogging eye and face wash with quick opening, full-flow valves, stainless steel eye and face wash receptor. Provide copper alloy control valves.

D201090 1.3 COMBINATION EMERGENCY SHOWER & EYEWASH

ISEA Z358.1, column mounted on a floor flange. Design combination unit so components can be operated individually from a common fixture supply line. Provide a self-cleaning, non-clogging 10 inch (250 mm) diameter stainless steel deluge shower head with elbow, full flow stay-open ball valve with pull rod and 8 inch (200 mm) diameter ring or triangular handle one inch (25 mm) interconnecting fittings. Provide a self-cleaning, non-clogging eye and face wash with quick opening, full-flow valves, stainless steel eye and face wash receptor. Provide copper alloy control valves.

D2020 DOMESTIC WATER DISTRIBUTION

D202001 PIPES & FITTINGS

D202001 1.1 COPPER

Use copper tubing and fittings for pipe sizes 4 inches (100 mm) or smaller. Use type L tubing above ground with either solder fittings, or press-on copper fittings. For buried piping, use type K tubing with either solder fittings, or press-on copper fittings.

D202001 1.2 CHLORINATED POLYVINYL CHLORIDE (CPVC)

When specified in ESR section D20, provide CPVC pipe, fittings, and solvent cement per ASTM D 2846/D 2846M for sizes 4 inches (100 mm) and smaller. Provide transition union connections or threaded gate valve between metallic piping and CPVC piping.

D202002 VALVES & HYDRANTS

D202002 1.1 VALVES

Provide valves at water supplies to fixtures and to provide ease of maintenance as required in the IPC.

D202002 1.2 HOSE BIBBS & HYDRANTS

Use non-freeze wall hydrants where the winter design temperature is at or below freezing. Hose bibbs are acceptable for use elsewhere.

D202002 1.2.1 Hose bibbs

Angle type, copper alloy hose bibbs with vacuum breaker.

D202002 1.2.2 Wall Hydrants

Non-freeze, ASSE 1019, cast bronze, with vacuum breaker, locking shield and tee-handle.

D202003 DOMESTIC WATER EQUIPMENT

D202003 1.1 BACKFLOW PREVENTERS

Furnish proof that each make, model/design, and size of backflow preventer being furnished for the project is approved by and has a current "Certificate of Approval" from the Foundation for Cross-Connection Control and Hydraulic Research (FCCCHR)-USC. Listing of the particular make, model/design, and size in the current FCCCHR-USC will be acceptable as the required proof. Provide freeze protection for aboveground exterior applications in areas where the winter design temperature is at or below freezing.

D202003 1.2 WATER HEATERS

D202003 1.2.1 Electric Water Heaters

Electric water heaters with double heating element per UL 174 for water heaters with less than 120 gallons of storage and 200,000 btuh input. Provide water heater per UL 1453 for commercial water heaters with 120 gallons of storage or more and 200,000 btuh input or more. Water heaters shall be equipped with glass-lined steel tanks, high efficiency type, insulated with polyurethane foam insulation, replaceable anodes, and adjustable range thermostat to allow hot water settings between 110 and 160 degrees F (43 and 71 degrees C). Water heater warranty shall be a minimum of 5 years.

D202003 1.2.2 Gas-Fired Water Heaters

High efficiency storage type water heaters per CSA/AM Z21.10.1 for water heaters with less than 120 gallons of storage and input ratings of 75,000 btuh or less. Provide water heater per CSA/AM Z21.10.3 for commercial water heaters with 120 gallons of storage or more and input ratings above 75,000 btuh. Water heaters shall meet AGA requirements. Water heaters shall be equipped with glass-lined steel tanks, polyurethane foam insulation, replaceable anodes, and adjustable range thermostat to allow hot water settings between 110 and 160 degrees F (43 and 71 degrees C). Water heater warranty shall be a minimum of 5years. Provide vent in accordance with NFPA 54.

D202003 1.2.3 Oil-Fired Water Heaters

UL 732 oil-fired water heaters with glass-lined steel tanks, high efficiency type, insulated with polyurethane foam insulation, replaceable anodes, with adjustable range thermostat to allow hot water settings between 110 and 160 degrees F (43 and 71 degrees C). Provide vent in accordance with NFPA 58. Oil-fired water heater system design shall be in accordance with NFPA 31.

D202003 1.2.4 Instantaneous Water Heater (Electric)

UL 499, heater(s) shall be of the modulating, under the sink, point-of-use type. Output temperature shall be adjustable from 40 degrees F to 160 degrees F. Heating elements shall be field replaceable. Unit(s) shall have a 10-year warranty.

D202003 1.2.5 Steam Heat Exchangers

Double wall copper tube domestic water heating elements constructed with air gap to atmosphere between the two walls using steam as the heating medium exterior of the heating elements. Provide posted operating instructions for water heaters.

D202003 1.2.6 Storage Tanks

AWWA D100, glass-lined vertical steel tanks, minimum of 125 psig (862 kPa) (gage) working pressure.

D202003 1.3 PUMPS

D202003 1.3.1 Inline Pumps

In-line circulator for service water distribution system. Factory assembled and tested pumps constructed of materials suitable for hot domestic water service.

D202003 1.3.2 Base Mounted Pumps

Potable water service, base mounted, end suction pumps with mechanical seals and drip-proof electric motors.

D202003 1.4 DOMESTIC WATER PRESSURE BOOSTER SYSTEM

Factory assembled, tested, and certified by a single manufacturer who assumes undivided responsibility for the system to include providing start-up services, two days instruction and furnishing related operations and maintenance manuals. Each building shall be provided with its own system. Each system will consist of a minimum of two pumps mounted on a single, welded structural steel base. Provide bladder type low-flow accumulator storage tank, lead-lag pump alternator selector switches and all related controls and alarms required for safe and proper system operation. Provide variable frequency drive pump operation.

D202003 1.5 EXPANSION TANKS

Steel expansion tank with potable water rated polypropylene or butyl lined

diaphragm at water heater.

D202003 1.6 WATER METERS

AWWA C701 turbine type, with register reading in liters and U.S. gallons.

D202004 INSULATION & IDENTIFICATION

D202004 1.1 PIPING INSULATION

Mineral fiber insulation on domestic hot water supply and recirculation piping. Insulate domestic cold water piping with cellular glass insulation (ASTM C 552, Type II, and Type III) or polyisocyanurate insulation (ASTM C 591, type I).

D202004 1.2 PIPING & EQUIPMENT IDENTIFICATION

In addition to the requirements in Section Z10, *General Performance Technical Specification*, provide laminated plastic nameplates for valves. Stop valves in supplies to fixtures will not require nameplates. Identify above ground pipe with the type of service and direction of flow. Letter size, lengths and colors shall be per ANSI A13.1.

D202005 SPECIALTIES

D202005 1.1 WASHING MACHINE CONNECTOR BOX

Recessed wall box fabricated of PVC plastic. Provide bronze dual washing machine valve with single lever shut-off.

D202005 1.2 VALVE BOXES

For each buried valve provide cast-iron, ductile-iron box of a suitable size. Provide cast-iron or ductile-iron cover for the box with the word "WATER" cast on the cover.

D202005 1.3 WATER HAMMER ARRESTORS

PDI WH 201, water hammer arrestors in lieu of air chambers.

D202005 1.4 ICEMAKER CONNECTOR BOX

Recessed wall box fabricated of PVC plastic. Provide bronze shut-off valve.

D202090 OTHER DOMESTIC WATER SUPPLY

D202090 1.1 SUPPORTS

Provide piping supports in accordance with the IPC.

D202090 1.2 INSPECTIONS

Prior to initial operation, inspect piping system for compliance with drawings, specifications, and manufacturer's submittals.

D202090 1.3 DISINFECTION

Upon completion of the installation, disinfect all systems per the IPC.

D202090 1.4 PLUMBING SYSTEMS TESTING

Upon completion of the installation test all systems per the IPC.

D2030 SANITARY WASTE

D203001 WASTE PIPE & FITTINGS

D203001 1.1 PIPING AND FITTINGS

Cast iron hub and spigot pipe and fittings, rubber compression gasket joints or cast-iron hubless pipe and fittings, CISPI 301 with CISPI 310 couplings. Where indicated in ESR Section D20, plastic PVC or ABS piping, fittings, and solvent cement per ASTM D 2665 or ASTM D 2661 may be provided. Plastic piping shall be equipped with approved firestopping devices as required by code.

D203001 1.2 CLEANOUTS

Provide cleanouts as required by the IPC. Material shall be consistent with the piping system materials.

D203002 VENT PIPE & FITTINGS

Cast-iron hubless pipe and fittings, CISPI 301 with CISPI 310 couplings. Where indicated in ESR Section D20, plastic PVC or ABS piping, fittings, and solvent cement per ASTM D 2665 or ASTM D 2661. PVC piping shall be equipped with approved firestopping devices as required by code. Single drainage/vent stack systems (such as Philadelphia system) and mechanical air admittance valves are not acceptable.

D203003 FLOOR DRAINS

Floor drains shall be flush strainer or extended rim type as required by the IPC. Provide in mechanical rooms, restrooms, fire pump room, laundry room, and plumbing chase areas. Provide floor sinks in kitchens. Provide floor sinks where required for interior air handling unit condensate drains.

D203004 SANITARY & VENT EQUIPMENT

D203004 1.1 PUMPS

D203004 1.1.1 Submersible Sump Pumps

Factory assembled and tested submersible type pumps for operation under water.

D203004 1.1.2 Sewage Pumps

FS A-A-50555, single or duplex type to meet demand. Duplex types shall be provided with automatic controls to alternate the operation from one pump to the other.

D2040 RAIN WATER DRAINAGE

D204001 PIPE & FITTINGS

Cast iron hubless pipe and fittings, CISPI 301 with CISPI 310 couplings. Where indicated in ESR Section D20, plastic PVC or ABS piping, fittings, and solvent cement per ASTM D 2665 or ASTM D 2661 may be used. PVC piping shall be equipped with approved firestopping devices as required by code. Size and install piping in accordance with the IPC.

D204002 ROOF DRAINS

Roof drains shall conform to ASME A112.6.4, with dome and integral flange, and shall have a device for making a watertight connection between roofing and flashing.

D204003 RAIN WATER DRAINAGE EQUIPMENT

Where required by building design, provide expansion joint(s) of proper size to receive the conductor pipe. The expansion joint shall consist of a heavy cast-iron housing, brass or bronze sleeve.

D204004 INSULATION & IDENTIFICATION

Mineral fiber insulation on all drainage piping that may be subject to condensation. Provide a vapor retarder. Identify aboveground pipe with the type of service and direction of flow. Letter size, lengths and colors shall be per ANSI A13.1.

D2090 OTHER PLUMBING SYSTEMS

D209001 SPECIAL PIPING SYSTEMS

D209001 1.1 NATURAL GAS PIPING

Conform to requirements of the local natural gas utility and ASME B31.8, *Gas Transmission and Distribution Piping Systems*, for exterior piping. Conform to requirements of NFPA 54, *National Fuel Gas Code*, for interior gas piping. Provide meter and pressure regulator in accordance with the requirements of the local utility. Provide earthquake valve where required by code.

D209002 ACID WASTE SYSTEMS

Acid-resistant DWV pipe, fittings, and couplings with mechanical, bell and spigot, or fusion type joints. Material for buried piping and aboveground piping shall be silicon-iron composition. Borosilicate glass pipe and fitting may be provided for aboveground piping where acid composition dictates, except vent piping through and above roofs shall be silicon-iron composition. Provide cleanouts and drains as specified for DWV piping, except material shall be silicon-iron composition.

D209003 INTERCEPTORS

D209003 1.1 OIL/WATER SEPARATOR

Oil/water separator, where required, in accordance with the IPC and with

a minimum flow capacity to meet system demand.

D209003 1.2 GREASE INTERCEPTORS

Provide in accordance with the IPC and PDI G 101.

D209005 COMPRESSED AIR SYSTEM (NON-BREATHING)

D209005 1.1 AIR COMPRESSOR

Factory packaged electric motor driven, duplex air compressor including manufacturer's standard air filter, oil filter, and plug drain. Air compressor, aftercooler, and receiver shall be factory packaged as a unit. Receiver tank shall be per ASME PBVC Sec. VIII D1, labeled and rated for 125 PSI (862 kPa) gage, equipped with required valves and trimmings, including gage and automatic drain valve and ASME BPVC pressure safety relief valve. Air compressor and receiver shall be sized in accordance with the Compressed Air and Gas Institute (CAGI) guidelines. Locate air compressor away from noise sensitive areas.

D209005 1.2 REFRIGERATED AIR DRYER

Low-pressure compressed air dryer of the mechanical refrigeration type, equipped with an automatic temperature shutdown switch to prevent freezing, a regenerative air-to-air exchanger (as standard with the manufacturer), and a main compressed air cooling exchanger. Refrigeration system shall use non-CFC refrigerant and shall cool compressed air to dry the air. Dryer operating pressure shall be not less than 125 PSI (862 kPa) gage. Dryer size shall be based on system pressure, the entire system air flow, and provide air with a dew point 5 degrees F (-15 degrees C) lower than the most stringent equipment or outlet requirement. The pressure drop of the dryer shall not exceed 2 PSI (13.8 kPa) gage.

D209005 1.3 COMPRESSED AIR PIPING SYSTEM

Piping shall conform to the requirements of ASME B31.1 for materials, assembly, and testing. Piping shall be steel, black seamless schedule 40 carbon steel per ASTM A 53/A 53M with threaded fittings or copper tubing per ASTM B 88, Type K or Type L, hard drawn, Class 1, with wrought copper or bronze fittings. Provide compressed air drops in locations to facilitate work required with quick disconnects throughout the work areas to allow connection of such as pneumatic tools and air guns. Each air drop shall be equipped with a filter/moisture separator, pressure gauge, air pressure regulator, and a quick-disconnect.

-- End of Section --

SECTION D30

HVAC
11/10

D30 GENERAL

RFP Part 3 including the Engineering System Requirements (ESR) provide project specific requirements. The RFP Part 4, Performance Technical Sections (PTS) provide generalized technical requirements that apply to multiple facility types and include more requirements than are applicable to any one project. Therefore, only the RFP Part 4 requirements that apply to the project and further define the RFP Part 3 project specific requirements are required.

D30 1.1 NARRATIVE

This section includes the construction of interior mechanical systems. This section covers installations inside the facility and out to the five foot line. See Section G30, *Site Civil/Mechanical Utilities*, for continuation of systems beyond the five-foot line.

D30 1.2 MECHANICAL DESIGN GUIDANCE

Provide the design and installation in accordance with the following references. This Performance Technical Specification (PTS) adds clarification to the fundamental requirements contained in the following Government Standards. The general requirements of this PTS section are located in PTS Section Z10, *General Performance Technical Specification*.

D30 1.2.1 Government Standards

Federal Energy Management Program (FEMP)

UNIFIED FACILITIES CRITERIA (UFC)

UFC 1-200-01	General Building Requirements(A reference in this PTS section to UFC 1-200-01 requires compliance with the Tri-Service Core UFCs that are listed in UFGS Section 01 33 10.05 20, which includes the following significant UFC(s):UFC 3-400-10N, Mechanical EngineeringUFC 3-420-01, Plumbing Systems)
UFC 3-440-04N	Solar Heating of Buildings and Domestic Hot Water

UNIFIED FACILITIES GUIDE SPECIFICATIONS (UFGS)

UFGS 01 78 24.00 20	Electronic Facility Operation and Maintenance Support Information

UFGS 23 05 93	Testing, Adjusting, and Balancing for HVAC
UFGS 23 09 23.13 20	BACNET Direct Digital Control Systems for HVAC
UFGS 23 81 23.00 20	Computer Room Air Conditioning Units

D30 1.3 PERFORMANCE VERIFICATION AND ACCEPTANCE TESTING

a. Verification of satisfactory HVAC system performance shall be via Performance Verification Testing, as detailed in this section.
b. The Government reserves the right to witness all Acceptance Tests and Inspections, review data, and request other such additional inspections and repeat tests as necessary to ensure that the system and provided services conform to the stated requirements.
c. The Qualified Testing Organization shall provide the Acceptance Tests and Inspections test plan and perform the acceptance tests and inspections. Test methods, procedures, and test values shall be performed and evaluated in accordance with appropriate standards, and the manufacturer's recommendations. Equipment shall be placed in service only after completion of required tests and evaluation of the test results have been completed. Contractor shall supply to the testing organization complete sets of shop drawings, settings of adjustable devices, and other information necessary for an accurate test and inspection of the system prior to the performance of any final testing. Perform acceptance tests and inspections on Computer Room Air Conditioning Units, Direct Digital Control System, and HVAC Testing/Adjusting/Balancing.

D30 1.4 HVAC COMMISSIONING

Commission the HVAC systems per the Commissioning Plan as required by UFGS Specification Section 01 45 00.05 20, *Design & Construction Quality Control*. HVAC system commissioning shall coordinate with and incorporate the testing, reporting, training & O&M documentation requirements of UFGS 23 05 93, *Testing, Adjusting, and Balancing for HVAC*and UFGS 23 09 23.13 20, *BACnet Direct Digital Control Systems for HVAC*.

D30 1.5 DESIGN SUBMITTALS

Design Submittals shall be in accordance with Z10, *General Performance Technical Specifications*, UFGS section 01 33 10.05 20, *Design Submittal Procedures*, UFC 1-300-09N, *Design Procedures*, and UFC 3-400-10N, *Mechanical Engineering*.

In addition, UFGS sections listed below or in the body of the PTS text are to be used by the Designer of Record (DOR) as a part of the design submittal. If the UFGS products or systems are applicable to the project, the DOR shall edit these referenced UFGS sections and submit them as a part of the design submittal specification. Edit the specification sections in accordance with the limitations stated in PTS section Z10, *General Performance Technical Specifications*.

UFGS 01 78 24.00 20, *ElectronicFacility Operation and Maintenance Support Information*

UFGS 23 09 23.13 20, *BACnet Direct Digital Control Systems for HVAC*

UFGS 23 05 93, *Testing, Adjusting, and Balancing for HVAC*

UFGS 48 14 13.00 20, *Solar Liquid Flat Plate Collectors*

D30 1.6 CONSTRUCTION SUBMITTALS

Submit construction submittals in accordance with PTS section Z10, *General Performance Technical Specifications*. In addition to the Z10 requirements, the Designer of Record (DOR) shall approve the following construction submittals as a minimum:

Solar hot water heating system fixtures and equipment, and OMSI information for all equipment and fixtures.

D30 1.7 MOTORS

Single-phase fractional-horsepower alternating-current motors shall be high efficiency types corresponding to the applications listed in NEMA MG 11. Select polyphase motors based on high efficiency characteristics relative to the applications as listed in NEMA MG 10. Additionally, all polyphase squirrel-cage medium induction motors with continuous ratings shall meet or exceed energy efficient ratings per Table 12-10 of NEMA MG 1. Provide controllers for 3-phase motors rated 1 hp (0.75 kW) and above with phase voltage monitors designed to protect motors from phase loss and over/under-voltage. Provide means to prevent automatic restart by a time adjustable restart relay. For packaged equipment, the manufacturer shall provide controllers including the required monitors and timed restart. Provide reduced voltage starters for all motors 25 hp and larger.

D3010 ENERGY SUPPLY

D301001 OIL SUPPLY SYSTEM

Conform to requirements of International Mechanical Code for piping. Conform to requirements of NFPA 31 for testing. Contractor is responsible for providing the complete oil supply system to the facility, including any applications and permits.

D301001 1.1 OIL SUPPLY SYSTEM PIPING & EQUIPMENT

ASTM A 53/A 53M or ASTM A 106/A 106M piping with associated ASME fittings or ASTM B 88, type L or M copper tubing with ASME B16.26 flared fittings or compression type fittings. Provide welded fittings on piping below grade. Pumps that are not part of the burner assembly shall be positive displacement type. Provide oil filter prior to oil entering appliance or pump. Storage tanks shall meet the requirements of NFPA 31.

D301002 GAS SUPPLY SYSTEM

D301002 1.1 NATURAL GAS PIPING

Conform to requirements of the local natural gas utility and ASME B31.8, *Gas Transmission and Distribution Piping Systems*, for exterior piping. Conform to requirements of NFPA 54, *National Fuel Gas Code*, for interior gas piping. Provide meter and pressure regulator in accordance with the requirements of the local utility. Provide earthquake valve where required by code. Contractor is responsible for providing the complete natural gas system to the facility, including any applications and permits.

D301002 1.2 MATERIALS AND EQUIPMENT

D301002 1.2.1 Aboveground Within Buildings

Black steel per ASTM A 53/A 53M, Schedule 40, and associated ASME fittings threaded ends for sizes 2 inches (50 mm) and smaller; otherwise, plain end beveled for butt welding.

D301002 1.3 PRESSURE TESTS

Pressure test per NFPA 54 at 1.5 times maximum working pressure, but in no case less than 50 PSI (350 kPa).

D301002 1.4 PROPANE PIPING

If required, provide the same as specified for natural gas and comply with NFPA 58.

D301002 1.4.1 Underground

Polyethylene (PE) pipe conforming to ASTM D 2513 for 100 PSI (690 kPa) (gage) working pressure. Standard Dimension Ratio shall be 11.5 maximum. Provide detectable aluminum plastic backed tape or detectable magnetic plastic tape manufactured specifically for warning and identification of direct buried piping. Tape shall be detectable by an electronic detection instrument. Polyethylene Fittings shall be ASTM D 2683 socket fittings or ASTM D 2513 molded butt-fusion fittings.

D301002 1.5 PROPANE TANKS

If not provided by the propane provider, the tank material and installation shall comply with NFPA 58.

D301003 STEAM SUPPLY SYSTEM (FROM CENTRAL PLANT)

Refer to Section G30, *Site Civil/Mechanical Utilities*

D301004 HOT WATER SUPPLY SYSTEM (FROM CENTRAL PLANT)

Refer to Section G30, *Site Civil/Mechanical Utilities*

D301005 SOLAR ENERGY SUPPLY SYSTEM

Design and build each solar domestic hot water heating system meeting the requirements of UFC 3-440-04N *Solar Heating of Buildings and Domestic Hot Water*. Each system shall be fully integrated with the building DDC controls system.

Provide complete solar domestic hot water system designed and built by a single contractor who specializes in solar heated water systems. System shall be designed, built, and tested by this contractor who shall be responsible for the provided system to operate as proposed. This design-build contractor must be endorsed in writing, prior to system design, by the manufacturer of the solar plate collectors provided for this solicitation.

The solar domestic hot water system designer shall work with the building designers to optimize the roof area, slope and orientation available for solar domestic hot water. Coordinate with other solar systems utilizing the roof area such as photovoltaic systems.

Provide solar liquid flat plate collector systems to comply with the requirements specified in UFGS Section 48 14 13.00 20, *Solar Liquid Flat Plate Collectors.*

D3020 HEAT GENERATING SYSTEMS

D302001 BOILERS

If required, provide Boiler(s) type for the load capacity of the building as indicated in ESR Section D30.

D302001 1.1 REQUIREMENTS

Boiler shall be designed, tested, and installed per ASME CSD-1 (Controls and Safety Devices) and ASME BPVC (Boiler and Pressure Vessel Code). The boiler shall meet the requirements of the UL 795, ANSI Z83.3, and ASME CSD. Oil-fired boiler system design shall be in accordance with NFPA 31.

D302001 1.2 BOILER BURNER

Burners provided shall be the make, model and type certified and approved by the manufacturer of the boiler being provided. Burner controls and flame safety equipment shall conform to either ASME CSD-1 or NFPA 58 as dictated by the input.

D302001 1.3 BOILER TRIM AND CONTROL EQUIPMENT

D302001 1.3.1 Boiler Controls

Mount controls, including operating switches, indicating lights, gages, alarms, motor starters, fuses, and circuit elements of the control systems, on a single control panel mounted on the burner or separate from the burner. Location of the separate panel shall be at the side of the boiler or in a freestanding control cabinet away from the front of the boiler. When using BACnet communication protocol, use the ASHRAE 135 protocol without gateways to interface with the BACnet Direct Digital Control System in specification UFGS 23 09 23.13 20.

D302001 1.3.2 Boiler Trim

Comply with ASME BPVC SEC IV, ASME CSD-1, and additional appurtenances as specified herein.

D302001 1.3.3 Pressure Gages

Provide pressure gages with a scale equivalent to 1.5 times the outlet water pressure on supply water piping and return water piping.

D302001 1.3.4 Thermometers

Provide thermometers with a scale equivalent to 1.5 times the outlet water temperature on supply water piping and return water piping.

D302001 1.3.5 Drain Trapping

Provide drain valve and piping to a floor drain.

D302001 1.3.6 Air Vent Valve

Provide with screwed connection, stainless steel disk, and stainless steel seats to vent entrapped air.

D302001 1.4 STEAM BOILERS

Steam boilers shall meet the requirements of hot water boilers, except as follows.

D302001 1.4.1 Pressure Gages

Provide pressure gages with a scale equivalent to 1.5 times the outlet water pressure on boiler feedwater supply piping and condensate return water piping. Provide boiler steam pressure gage with scale equivalent to 1.5 times the boiler rated working pressure.

D302001 1.4.2 Thermometers

Provide thermometers with a scale equivalent to 1.5 times the outlet water temperature on boiler feedwater piping and return water piping.

D302001 1.5 BOILER STACK AND ACCESSORIES

Provide pre-manufactured, multi-wall stacks complying with NFPA 54 or NFPA 58 and UL-listed. Provide flue gas thermometer and mount in flue gas outlet.

D302001 1.6 BOILER STARTUP AND OPERATIONAL TESTS

D302001 1.6.1 Boiler Cleaning

Prior to startup, clean boiler(s) in accordance with ASME *Boiler and Pressure Vessel Code*and manufacturer's recommendations.

D302001 1.6.2 Operational Tests

Furnish the services of an engineer or technician approved by the boiler manufacturer for installation, startup, operational and safety testing. Demonstrate proper operability of combustion control, flame safeguard control, and safety interlocks.

D302003 FUEL-FIRED UNIT HEATERS

D302003 1.1 GAS-FIRED UNIT HEATERS

ANSI Z83.8 and AGA label. Equip each heater with individually adjustable package discharge louver. Provide with thermostat.

D302003 1.2 INFRARED HEATERS

ANSI Z83.8 and AGA label.

D302004 AUXILIARY EQUIPMENT

D302004 1.1 HEAT EXCHANGERS

Steam to hot water converter as required for the application. Provide factory assembled, u-tube units constructed in accordance with ASME BPVC for steam or hot water. Factory assembled, plate type heat exchangers may be provided for hot water.

D302004 1.2 CONDENSATE RETURN UNITS

Floor-mounted receiver and duplex pump unit.

D302005 EQUIPMENT THERMAL INSULATION

Insulate hot water pumps and equipment as suitable for the temperature and service in rigid block, semi-rigid board, or flexible unicellular insulation to fit as closely as possible to equipment.

D3030 COOLING GENERATING SYSTEMS

If coatings are indicated in ESR Section D30, provide with copper tube/copper fin construction or immersion applied, baked phenolic or other approved coating that passes the 3000 hour salt spray resistance test using the ASTM B117 procedure. Field applied coatings are not acceptable.

D303001 CHILLED WATER SYSTEMS

D303001 1.1 AIR-COOLED CHILLERS

Air-cooled chillers shall be type indicated in Project Program and meet the requirements of AHRI 550/590. Provide control panel with the manufacturers' standard controls and protection circuits. If DDC system is required in project, provide a control interface for remote monitoring of the chiller's operating parameters, functions and alarms from the DDC control system central workstation. When using BACnet communication protocol, use the ASHRAE 135 protocol without gateways to interface with the BACnet DDC system in specification UFGS 23 09 13.13 20.

D303001 1.1.1 Stages

Provide continuous variable speed compressor adjustment to match actual load, or minimum of four stages of unloading at 25% per stage minimum for reciprocating, centrifugal, and scroll chillers. Provide reciprocating units with hot gas bypass.

D303001 1.1.2 Pressure Control

Provide head pressure control for cold temperature operation. Provide freeze protection for chiller and piping.

D303001 1.1.3 Coil Construction

Provide copper tube, aluminum fins for condenser coils. Provide manufacturer's optional louvered covers or hail guards for condenser coils to provide protection against vandalism, debris, or hail.

D303001 1.2 WATER-COOLED CHILLERS

Self-contained chiller meeting the requirements of AHRI 550/590. Provide control panel with the manufacturers' standard controls and protection circuits. If DDC system is required in project, provide a control interface for remote monitoring of the chiller's operating parameters, functions and alarms from the DDC control system central workstation. Provide automatic capacity-reduction system for stable operation from 100 to 10 percent of full load capacity. When using BACnet protocol, use the ASHRAE 135 protocol without gateways to interface with the BACnet DDC system in specification 23 09 23.13 20.

D303001 1.3 COOLING TOWERS

Factory assembled, conforming to NFPA 214. Fire hazard rating for plastic impregnated materials shall not exceed 25. Provide Cooling Technology Institute 201 certification of tower capability and performance. Cooling Tower performance shall meet or exceed that listed in ASHRAE 90.1. Construct as indicated in ESR Section D30 with fill material of PVC formed sheets. Provide stainless steel hardware. Provide vibration cutout switch interlocked with the fan motor. Provide 2-speed or adjustable frequency drive fan motors. Provide work platform(s) at all locations in the tower that require periodic maintenance. For multi-cell installations, provide isolation valves on inlets and outlets of each cell.

D303001 1.4 CLOSED CIRCUIT COOLERS

Factory assembled, conforming to NFPA 214. Fire hazard rating for plastic impregnated materials shall not exceed 25. Provide Cooling Technology Institute 201 certification of tower capability and performance. Cooler performance shall meet or exceed that listed in ASHRAE 90.1. Provide stainless steel hardware. Provide vibration cutout switch interlocked with the fan motor. Provide 2-speed or adjustable frequency drive fan motors. Meet OSHA safety requirements for stairs and handrails.

D303002 DIRECT EXPANSION SYSTEMS

If coatings are indicated in ESR Section D30, provide with copper tube/copper fin construction or immersion applied, baked phenolic or other approved coating that passes the 3000 hour salt spray resistance test using the ASTM B117 procedure. Field applied coatings are not acceptable.

D303002 1.1 HEAT PUMPS

D303002 1.1.1 Air to Air

Air-cooled, split system heat pumps with ducted air distribution. Provide units factory assembled, designed, tested, and rated in accordance with AHRI 210/240 or AHRI 340/360. Provide manufacturer's minimum recommended clearance around condensing units. Refrigerant piping size shall be per the manufacturer's recommendations. Insulate refrigerant piping suction lines and condensate drain.

D303002 1.1.2 Water Source

Factory assembled, designed, tested, and rated in accordance with AHRI/ISO 13256-1 or AHRI/ISO 13256-2. Unit shall be AHRI/ISO 13256-1 or AHRI/ISO 13256-2 certified, or listed in the AHRI/ISO 13256-1 or AHRI/ISO 13256-2 directory.

D303002 1.1.3 Ground-Coupled

Factory assembled, designed, tested, and rated in accordance with AHRI/ISO 13256-1 or AHRI/ISO 13256-2. Unit shall be AHRI/ISO 13256-1 or AHRI/ISO 13256-2 certified, or listed in the AHRI/ISO 13256-1 or AHRI/ISO 13256-2 directory. Ground-coupled heat pumps shall be connected to the heat exchanger by a closed loop ground source vertical well field. Design and installation of each well field shall comply with IGSHPA and ASHRAE Standards.

D303002 1.2 CONDENSING UNITS

Air-cooled, split system air conditioner with ducted air distribution. Provide units factory assembled, designed, tested, and rated in accordance with AHRI 210/240 or AHRI 340/360. Provide manufacturer's minimum recommended clearance around condensing units. Refrigerant piping size shall be per the manufacturer's recommendations.

D303002 1.3 DX VARIABLE AIR VOLUME (VAV) UNITS

Direct expansion equipment shall be specifically designed and manufactured for VAV applications. The same manufacturer shall provide central air handling units, VAV boxes/zone dampers and zone controls. Airflow through the evaporator coils shall not be modulated. Provide duct mounted zone control damper units with integral control box, designed for use with DX VAV packaged systems. Self-modulating air diffusers will not be allowed.

D303002 1.4 DUCTLESS SPLIT SYSTEM

Air-cooled, ductless split system. Provide units factory assembled, designed, tested, and rated in accordance with ARI 210/240. Provide manufacturer's minimum recommended clearance around heat pump or condensing units. Refrigerant piping size shall be per the manufacturer's recommendations. Insulate refrigerant piping suction lines and condensate drain.

D3040 DISTRIBUTION SYSTEMS

D304001 AIR DISTRIBUTION, HEATING & COOLING

D304001 1.1 DUCTWORK

Except as specified herein, provide ductwork constructed, braced, reinforced, installed, supported, and sealed per SMACNA standards.

D304001 1.1.1 Flexible Ducts

Use insulated flexible duct only for connections to air distribution devices to adapt to minor offsets. Flexible duct shall be UL 181 listed and per SMACNA 1966 duct construction standards with a minimum R value of 4. Maximum length of flexible ductwork shall be 6 feet (2 meters).

D304001 1.1.2 Flexible Connections

Provide flexible connectors between fans and ducts.

D304001 1.1.3 Volume Dampers

Provide manual volume dampers in each branch take-off from the main duct to control air quantity except for primary supply ductwork on VAV systems. Dampers shall conform to SMACNA 1966 duct construction standards and shall be seal class "A" construction.

D304001 1.1.4 Fire Dampers

Fire dampers shall be rated per UL 555. Fire dampers shall be dynamic type rated for closure against a moving airstream. Provide fire dampers that do not intrude into the air stream when in the open position.

D304001 1.1.5 Smoke Dampers

Smoke dampers shall be rated per UL 555S.

D304001 1.1.6 Sound Attenuators

Fabricated attenuators that will reduce the rated sound pressure level of the fan down to at least 65 decibels in the 250 Hz (third octave band) center frequency by using a reference sound source calibrated in decibels of sound power at 10 to 12 watts. Maximum permissible pressure drop shall not exceed 0.63 inch of water (157 Pa).

D304001 1.2 LOUVERS & HOODS

D304001 1.2.1 Louvers

Louvers shall bear AMCA ratings seal for air performance and water penetration in accordance with AMCA 500L and AMCA 511. Louvers shall be constructed of anodized aluminum alloy or stainless steel. Provide birdscreens.

D304001 1.2.2 Hoods

Hoods shall be constructed of anodized aluminum alloy or stainless steel. Provide with birdscreens.

D304001 1.3 GRILLES, REGISTERS, & DIFFUSERS

Factory-finished grilles, registers, and diffusers. Exterior and exposed edges shall be rolled, or otherwise stiffened and rounded.

D304001 1.4 INSULATION

Provide external thermal insulation for all ductwork. Insulate ductwork in concealed spaces with blanket flexible mineral fiber. Insulate ductwork in Mechanical Rooms and exposed locations with rigid mineral fiber insulation.

Provide insulation with factory applied all-purpose jacket with integral vapor retarder. In exposed locations, provide a jacket with white surface suitable for painting. Flame spread/smoke developed rating for all insulation shall not exceed 25/50. Minimum insulation thickness shall be the minimum thickness required by ASHRAE 90.1. Insulate the backs of all supply air diffusers with blanket flexible mineral fiber insulation.

D304001 1.5 VAV BOXES

Pressure-independent type variable air volume units rated per AHRI 880. Boxes shall not be allowed to fully shut-off. Provide each box with a heating coil unless not required by space reheat or heating. Provide electronic controls.

D304001 1.6 VARIABLE AIR VOLUME VAV FAN-POWERED UNITS

Pressure-independent, fan powered, VAV units rated per AHRI 880 and UL listed. Provide each box with a heating coil. Provide electronic controls with speed controller, discharge volume control damper(s), and return/recirculation air frame and filter. If discharge dampers are not provided with the unit, coordinate installation with the sheet metal contractor. Insulate in accordance with ASHRAE 90.1.

D304002 STEAM DISTRIBUTION SYSTEMS

D304002 1.1 STEAM PIPING

Steam piping shall be ASTM A 106/A 106M or ASTM A 53/A 53M Grade B, Schedule 40, black steel, electric-resistance welded or seamless.

D304002 1.2 CONDENSATE RETURN PIPING

Condensate return piping shall be ASTM A 106/A 106M or ASTM A 53/A 53M, Grade B, Schedule 80, black steel, electric-resistance welded or seamless.

D304002 1.3 STEEL PIPE FITTINGS

For piping 2 inch (50 mm) and smaller, provide ASME B16.3 malleable iron screwed fittings or ASME B16.11 socket welding (Class 3000) or threaded type (Class 2000). Provide ASME B16.9 butt-welding fittings or ASME B16.5 flanged type for piping 2-1/2 inch (63 mm) and larger.

D304002 1.4 INSULATION

Insulate steam and condensate return piping with mineral fiber or cellular

glass insulation with all-purpose jacket.

D304002 1.5 STEAM PRESSURE REDUCING STATION

For each building, provide steam pressure reducing station(s).

D304002 1.6 STEAM TRAPS

Provide steam traps and accessories in accordance with UFC 3-400-10N.

D304003 HOT WATER DISTRIBUTION SYSTEMS

D304003 1.1 HOT WATER PIPING

Hot water piping shall be electric resistance welded or seamless Schedule 40 black steel pipe conforming to ASTM A 53/A 53M. Piping 4 inch (100 mm) and smaller may be ASTM B 88 Type K or L copper.

D304003 1.2 STEEL PIPE FITTINGS

For piping 2 inch (50 mm) and smaller, provide ASME B16.3 malleable iron screwed fittings or ASME B16.11 socket welding (Class 3000) or threaded type (Class 2000). Provide ASME B16.9 butt-welding fittings or ASME B16.5 flanged type for piping 2-1/2 inch (63 mm) and larger. Grooved joint pipe coupling systems of appropriate pressure rating are acceptable in lieu of welded or screwed fittings.

D304003 1.3 COPPER FITTINGS

ASME B16.18 cast bronze solder joint type or ASME B16.22 wrought copper solder joint type.

D304003 1.4 ISOLATION VALVES

Provide isolation valves on supply and return lines at take-offs for service to each building(s). Valves shall be located in valve boxes.

D304003 1.5 INSULATION

Insulate hot water piping with mineral fiber insulation with factory-applied all-purpose jacket. Provide aluminum metal wrap over insulation for all exterior piping.

D304003 1.6 VALVES

Provide shut off valves, appropriately sized relief valves, and appropriately sized balancing valves as necessary to balance water flows, protect components and isolate equipment for service and repairs.

D304003 1.7 APPURTENANCES

Provide appurtenances such as air separators, expansion tanks, suction diffusers, strainers, and other required features to allow for proper operation of hot water systems.

D304003 1.8 TEST PORTS

Provide test ports in piping at inlet and outlet of all major system components including boilers, pumps, and other equipment as required.

D304004 CHANGEOVER DISTRIBUTION SYSTEMS

Provide as specified for Hot Water Distribution Systems see D304003.

D304005 GLYCOL DISTRIBUTION SYSTEMS

Provide as specified for Chilled Water Distribution Systems see D304006.

D304006 CHILLED / CONDENSER WATER DISTRIBUTION SYSTEMS

D304006 1.1 ABOVEGROUND CHILLED AND CONDENSER WATER PIPING

Aboveground chilled water piping shall be electric resistance welded or seamless Schedule 40 black steel pipe conforming to ASTM A 53/A 53M. Piping 4 inch (100 mm) and smaller may be ASTM B 88 Type K or L copper.

D304006 1.2 STEEL PIPE FITTINGS

For piping 2 inch (50 mm) and smaller, provide ASME B16.3 malleable iron screwed fittings or ASME B16.11 socket welding (Class 3000) or threaded type (Class 2000). Provide ASME B16.9 butt-welding fittings or ASME B16.5 flanged type for piping 2-1/2 inch (63 mm) and larger.

D304006 1.3 COPPER FITTINGS

ASME B16.18 cast bronze solder joint type or ASME B16.22 wrought copper solder joint type.

D304006 1.4 ISOLATION VALVES

Provide isolation valves on supply and return lines at take-offs for service to each building(s). Valves shall be located in valve boxes.

D304006 1.5 INSULATION

Insulate chilled water pumps and accessories for the temperature and service in rigid block, semi-rigid board, or flexible unicellular insulation to fit as closely as possible to equipment. Insulate above ground chilled water piping with cellular glass insulation (ASTM C 552, Type II, and Type III) or polyisocyanurate insulation (ASTM C 591, type I). Flexible unicellular insulation may be used on small piping runouts. Insulate condenser water piping with mineral fiber insulation. Provide all-purpose jacket with vapor retarder. Provide aluminum metal wrap over insulation for all exterior piping.

D304006 1.6 VALVES

Provide shut off valves, appropriately sized relief valves, and appropriately sized balancing valves as necessary to balance water flows, protect components and isolate equipment for service and repairs.

D304006 1.7 TEST PORTS

Provide test ports in piping at inlet and outlet of all major system components including chillers, pumps, and other equipment as required.

D304007 EXHAUST SYSTEMS

D304007 1.1 FANS

Fans shall be AMCA 210 certified, with AMCA seal. Fan bearings shall have a minimum average life of 200,000 hours at design operating conditions. Provide bird screens for outdoor inlets and outlets. Provide direct-drive type fans with means for verifying operation via the building DDC system or with speed controllers

D304007 1.2 IN-LINE FANS

UL-Listed centrifugal fans.

D304007 1.3 WALL FANS

Propeller fans with fan guards. Provide centrifugal fans with backdraft dampers and wall bracket.

D304007 1.4 ROOFTOP FANS

UL-Listed centrifugal fans with roof curb.

D304007 1.5 UTILITY SETS

AMCA 210 with AMCA seal.

D304007 1.6 BATHROOM FANS

UL 507 and UL-listed, Home Ventilating Institute (HVI) certified and with AMCA seal for ceiling installation.

D304007 1.7 RANGE HOODS

UL 507 and UL-listed, with AMCA seal, range hood with light over stove. Minimum fan capacity shall be 160 cfm with maximum sound level of 5.6 sones.

D304008 AIR HANDLING UNITS

AMCA 210 certified fans with AMCA seal. Fan bearings shall have a minimum average life of 200,000 hours at design operating conditions. Provide bird screens for outdoor inlets and outlets.

D304008 1.1 CENTRAL STATION AIR HANDLERS

Modular construction, double wall air handling units with minimum of 1 inch (25 mm) casing insulation. Provide AHRI 430 certified fans and AHRI certified coils. Provide stainless steel, positive draining condensate drain pan. For 100% outside air units provide capability for cooling, heating, dehumidification and reheat.

D304008 1.1.1 Ultraviolet Disinfection System

For central station air handling units provide an ultra violet c-band (UVC) disinfection system for mold, bacteria and odor control in each air handler that has a chilled water or DX cooling coil. Irradiation-emitters and fixtures are to be installed in sufficient quantity and in such an arrangement so as to provide an equal distribution of UVC energy on the coil and in the drain pan. To maintain energy efficiency, the UVC energy produced shall be of the lowest possible reflected and shadowed losses. Energy Efficiency - Power supplies shall be of the high efficiency electronic type and matched to the emitter. Intensity - The minimal UVC energy striking the leading edge (if installed upstream) or trailing edge (if installed downstream) of all the coil fins shall not be less than 820 ÂµW/cm2 at the closest point and through placement, not less than 60% of that value at the farthest point. Equal amounts are to strike the drain pan, either directly or indirectly through reflection. The foregoing sets the placement and minimum quantity of fixtures to be installed. Installation - emitters and fixtures shall be installed at right angles to the conforming lines of the coil fins, such that through incident angle reflection, UVC energy bathes all surfaces of the coil and drain pan as well as all of the available line of sight airstream. One complete set of spare bulbs will be supplied.

D304090 OTHER DISTRIBUTION SYSTEMS

D304090 1.1 PUMPS

Centrifugal circulating pumps with motor, motor starter, and motor enclosure conforming to the appropriate NEMA standards. Provide suction diffusers on base-mounted pumps. Insulate pumps used for hot service and chilled water service.

D304090 1.1.1 In-Line Pumps

Pumps constructed of manufacturer's standard materials suitable for chilled, condenser, and hot water heating systems.

D304090 1.1.2 Base Mounted Pumps

Single stage end suction pumps suitable for chilled, condenser, and hot water heating systems.

D304090 1.2 VARIABLE FREQUENCY DRIVES (VFD)

Factory-assembled variable frequency drive control systems for variable speed control. All air handling unit and pump VFD's shall be from the same manufacturer. Each VFD shall include motor starter, motor disconnects and controls as required for a complete system. Units shall be UL-listed and comply with the National Electric Code.

Provide the following accessories:

Disconnect switch

Control circuit transformer, with primary and secondary fuses

Manual bypass

System hand-off-auto switch with provisions for remote start/stop of the system.

System initialized light

Run light

Failure alarm

LCD digital display with numeric keypad

Provide a control interface for remote monitoring of VFD functions and alarms from the DDC control system computer.

D304090 1.3 AIR SEPARATORS

ASME rated air separators with tangential inlet and outlet connections and automatic air vent.

D304090 1.4 SOLIDS SEPARATORS

Provide centrifugal solids separator with automatic drain in open systems.

D304090 1.5 EXPANSION TANKS

ASME rated expansion tanks with polypropylene or butyl diaphragm or compression tanks as indicated in UFC 3-400-10N.

D304090 1.6 MAKE-UP WATER STATION

Station shall consist of a water pressure-reducing valve and a relief valve in the make-up water line to the chilled and hot water systems to maintain the operating pressure. Provide a 3/4 inch (20 mm) globe valve by-pass around this pressure reducing station. Provide reduced pressure backflow preventer upstream of the by-pass.

D304090 1.7 GLYCOL MAKE-UP STATION

If required, provide a glycol makeup system to maintain system proper operating mixture.

D304090 1.8 CONDENSATE DRAIN PIPING

ASTM B 88, Type M or L, hard drawn copper.

D304090 1.9 CONDENSATE DRAIN INSULATION

Insulate condensate drain piping with flexible cellular insulation.

D304090 1.10 CHEMICAL TREATMENT

If required, Provide chilled and hot water systems with automatic chemical treatment system for the control of pH, scale formation, and corrosion

inhibition. Provide shot-type feeders for manual chemical feed. Feeders shall be rated for use with pressures up to 130 PSI (900 kPa) (gage). Provide condenser water systems with automatic chemical treatment systems that monitor conductivity, and pH, and provide for water metering and bleed-off. Provide chemicals in accordance with EPA and equipment manufacturer's recommendations.

D304090 1.11 PIPING IDENTIFICATION

Provide piping identification labels or Stencil names or code letters for piping systems in clearly visible letters and symbols. Provide arrow-shaped markings to indicate direction of flow.

D304090 1.12 PIPE SLEEVES

Provide pipe sleeves at each wall and floor penetration. The sleeve shall be of a material suitable to protect the carrier pipe (two pipe sizes larger) and sealed with an appropriate flexible material. Provide fire stopping in fire rated walls in accordance with IBC.

D304090 1.13 SYSTEM FLUSHING

Thoroughly flush hydronic systems prior to system startup. Isolate coils during initial flushing until water is clear.

D304090 1.14 HEAT TAPE

UL-Listed, self-regulating, heat tape on piping subject to freezing.

D3050 TERMINAL & PACKAGE UNITS

D305002 UNIT HEATERS

See D302004 for gas fired unit heaters.

D305002 1.1 STEAM

UL-Listed, factory assembled, unit heaters.

D305002 1.2 HOT WATER

UL-Listed, factory assembled, unit heaters.

D305002 1.3 CABINET UNIT HEATER

UL-Listed, factory assembled, heaters.

D305003 FAN COIL UNITS

UL-Listed, factory assembled and tested fan coils, AHRI 440 and AHRI certified.

D305004 FIN TUBE RADIATION

D305004 1.1 FIN TUBE RADIATORS AND CONVECTORS

Fin tube radiators and Convectors shall be provided with copper tubes and

aluminum fins. Provide normally open, spring return control valves.

D305005 ELECTRIC HEATING

D305005 1.1 UNIT HEATERS

Factory assembled, UL-1025, unit heaters.

D305005 1.2 BASEBOARD HEATERS

Factory assembled, UL-1042, heaters.

D305005 1.3 WALL HEATERS

Factory assembled, UL-1025, cabinet heaters.

D305005 1.4 INFRARED HEATERS

Factory assembled, UL-Listed and labeled heaters.

D305006 PACKAGE UNITS

D305006 1.1 ROOFTOP AIR HANDLERS

Factory packaged units in accordance with AHRI 430 and suitable for outdoor installation. Provide with manufacturer's roof curb.

D305006 1.2 DUCT HEATER

Factory assembled, UL-listed heaters. Provide control cabinet and heating coil.

D3060 CONTROLS AND INSTRUMENTATION

D306001 HVAC CONTROLS

D306001 1.1 DIRECT DIGITAL CONTROLS

Provide one of the following as directed in ESR Section D30.

a. Provide Direct Digital Controls (DDC) to comply with the requirements specified in UFGS Section 23 09 23.13 20, *BACNET Direct Digital Control Systems for HVAC*.
b. Provide a partial direct digital control (DDC) system to that will communicate with the existing DDC system. If using BACnet protocol, comply with the requirements specified in UFGS Section 23 09 23.13 20, *BACnet Direct Digital Control Systems for HVAC.* Notwithstanding any other provisions of this contract, no other product will be acceptable other than that indicated in ESR Section D30. Provide a distributed control system. Integrate all new DDC points on the existing server providing a seamless logical flow from the existing facilities to the new integrated facility.

The Designer of Record shall use UFGS Section 23 09 23.13 20 if using BACnet protocol, and submit the edited specification section as a part of the project design submittal.

Design requirements shall be in accordance with all specification notes and the BAS Owner shall be identified and designated early in the design documentation.

The system shall have stand alone digital controllers, a communication network, and a workstation computer with control software. Provide stand-alone control routines that operate without connection to the network during a loss of communication. Provide trending, scheduling and alarm tables (may be included with the sequence of operation). Provide reset routines (based on outdoor air temperature or zone demand) for hot water loop temperature setpoints and supply air static pressure control. Use alarming and trending services during performance testing or commissioning. Alarm every sequence routine when out-of-limits or control/response failure occurs. Display all graphic floor plans, equipment graphics, DDC ladder diagrams, and sequence of operations graphic pages.

All 120-volt wiring shall comply with NFPA 70. All 24-volt wiring shall comply with the IMC and terminal device manufacturer’s recommendations.

Provide training on the installed system according to the maximum training days in UFGS 23 09 23.13 20. All operator workstation functions requiring BACnet services, i.e., navigating through the graphic displays, trending, alarming and monitoring of the new controls system must be demonstrated from the existing operator workstation using only the existing application software and without the need to launch other applications or logon to other vendor applications.

D306001 1.2 ELECTRONIC CONTROLS

If required, provide programmable thermostats with built in keypads for scheduling of day and night temperatures with two setback periods per day. Provide independent summer and winter programs. Thermostats shall have temporary and manual override of schedule and battery backup.

D3070 SYSTEMS TESTING AND BALANCING

D3070 1.1 HVAC SYSTEM

Provide HVAC systems testing and balancing that complies with the requirements specified in UFGS Specification Section 23 05 93, *Testing, Adjusting, and Balancing for HVAC*. The Designer of Record shall prepare UFGS Specification Section 23 05 93, as a part of the project specification and shall include the prepared specification section in the design submittal for the project.

D3090 OTHER HVAC SYSTEMS AND EQUIPMENT

D309001 GENERAL CONSTRUCTION ITEMS

D309001 1.1 SEISMIC DESIGN

Provide in accordance with UFC 3-400-10N, *Mechanical Engineering*.

D309002 REFRIGERATION SYSTEMS

D309090 OTHER SPECIAL MECHANICAL SYSTEMS

D309090 1.1 ENERGY RECOVERY WHEELS

Total energy (enthalpy) type energy recovery wheels (heat wheels). Media shall be aluminum or a lightweight polymer coated with a corrosion-resistant finish. Etched or oxidized surfaces are not acceptable. Heat transfer surfaces shall be coated with a non-migrating (permanently bonded) absorbent specifically developed for the selective transfer of water vapor. Equal sensible and latent recovery efficiencies shall be documented through a certification program conducted per ASHRAE 84 and AHRI 1060. The energy recovery wheel shall have an insulated housing of double wall construction, rotor seals that are specifically designed to limit cross-contamination, and a rotation detector. Should rotation stop, the rotation detector shall alarm the HVAC control system. Filter sections shall be readily accessible for maintenance.

D309090 1.2 HEAT PIPES

Factory fabricated, assembled and tested heat pipes with counter-flow arrangement. Provide hermitically sealed, seamless aluminum tube cores with extended surfaces. Heat exchanger frame shall be constructed of not less than 16-gage galvanized steel and fitted with intermediate tube supports, and flange connections. Provide tube end covers and a partition of galvanized steel to separate exhaust and supply air streams without cross-contamination. A refrigerant shall be used as the working fluid. Type I refrigerants are not allowed.

-- End of Section --

SECTION D40

FIRE PROTECTION
11/10

RFP Part 3 including the Engineering System Requirements (ESR) provide project specific requirements. The RFP Part 4, Performance Technical Sections (PTS) provide generalized technical requirements that apply to multiple facility types and include more requirements than are applicable to any one project. Therefore, only the RFP Part 4 requirements that apply to the project and further define the RFP Part 3 project specific requirements are required.

D40 1.1 DESIGN GUIDANCE

Provide the design and installation of fire protection systems in accordance with the following references. This Performance Technical Specification (PTS) adds clarification to the fundamental requirements contained in the following Government Standards. The general requirements of this PTS section are located in PTS Section Z10, *General Performance Technical Specification.*

D40 1.1.1 Government Standards

UNIFIED FACILITIES CRITERIA (UFC)

UFC 1-200-01	General Building Requirements(A reference in this PTS section to UFC 1-200-01 requires compliance with the Tri-Service Core UFCs that are listed in UFGS Section 01 33 10.05 20, which includes the following significant UFC(s):UFC 3-600-01, Fire Protection Engineering for Facilities)
UFC 3-600-10N	Fire Protection Engineering

D40 1.2 QUALITY ASSURANCE

Materials and assemblies installed in the work shall be inspected and found to be in compliance with industry standards and these specifications prior to acceptance of the work. Items found not to be in compliance shall be removed, or corrective measures taken, to assure compliance with the referenced standard.

Qualifications, Training Plans, and Test Plans and Procedures indicated herein, shall be submitted 45 calendar days prior to the expected date of execution. Notify the Contracting Officer 14 calendar days prior to all testing. Submit test results within 7 calendar days of completion of testing.

D40 1.2.1 Qualified Workers

D40 1.2.1.1 Fire Protection Designer of Record

Services and qualifications of the FPDOR shall be as specified in UFC 3-600-01 and UFC 3-600-10N. The FPDOR shall review and approve all fire protection engineering submittals.

D40 1.2.1.2 Fire Protection Engineering Technicians

Workers required herein to be certified by the National Institute for Certification in Engineering Technologies (NICET) as an engineering technician in the Fire Protection Engineering Technology program shall be thoroughly trained and experienced, and completely familiar with the specified requirements and the methods needed for proper performance of the work in this section. All documentation required to be submitted for record and/or approval shall include the NICET engineering technician's signature, along with the technician's current NICET certification number, certification subfield, and level.

Installation drawings, shop drawings or working plans, calculations, other required pre-construction documentation and as-built drawings shall be prepared by, or under the direct supervision of a NICET engineering technician as specified in Section 6 D40 of Part 3.

D40 1.2.1.3 Qualified System Installers

Fire Suppression System and Fire Alarm System installers shall be regularly engaged in the installation of the type and complexity of system specified in the Contract documents, and shall have served in a similar capacity for at least three systems that have performed in the manner intended for a period of not less than 6 months.

Installers of Chlorinated Poly Vinyl Chloride (CPVC) sprinkler systems shall be certified by the manufacturer and maintain a copy of their certification on hand at all times.

D40 1.2.1.4 Fire Protection QC Specialist

The Fire Protection (FP) QC Specialist shall be a U.S. Registered Fire Protection Engineer (FPE) and shall be an integral part of the Prime Contractor's Quality Control Organization. This FPE shall have no business relationships (owner, partner, operating officer, distributor, salesman, or technical representative) with any fire protection equipment device manufacturers, suppliers or installers for any such equipment provided as part of this project. The Fire Protection Designer of Record (FPDOR) may serve as the FPQC Specialist provided the following qualifications are met.

a. Qualifications/Experience: The FPQC Specialist shall have obtained their professional registration by successfully completing the Fire Protection Engineering discipline examination. This FPE shall have a minimum of 5 years full time and exclusive experience in every aspect of facility design and construction as it relates

to fire protection, which includes, but is not limited to, building code analysis, life safety code analysis, design of automatic detection and suppression systems, passive fire protection design, water supply analysis, and a multi-discipline coordination reviews, and construction surveillance.

b. Area of Responsibility: The FPQC Specialist is responsible for assuring the proper construction and installation of life safety and fire protection features across all disciplines and trades. The FPQC Specialist shall be responsible for assuring that life safety and fire protection features are provided in accordance with the design documents, approved construction submittals, and manufacturer's requirements. Examples include, but are not limited to, water distribution systems including fire pumps and fire hydrants, fire resistive assemblies such as spray-applied fire proofing of structural components and fire rated walls/partitions, fire alarm and detection systems, fire suppression and standpipe systems, and emergency and exit lighting fixtures.

c. Construction Surveillance: The FPQC Specialist shall visit the construction site as necessary to ensure life safety and fire protection systems are being constructed, applied, and installed in accordance with the approved design documents, approved construction submittals, and manufacturer's requirements. Frequency and duration of the field visits are dependent upon particular system components, system complexity, and phase of construction. At a minimum, field visits shall occur just prior to installation of suspended ceiling system to inspect the integrity of passive fire protection features and fire suppression system piping, preliminary inspections of fire alarm/detection and suppression systems, and final acceptance testing of fire alarm/detection and suppression systems. The FPQC Specialist shall prepare a written report detailing compliance of any outstanding submittal review comments, summarizing the results of all tests, detailing all discrepancies discovered, corrective action taken, all forms as required by the respective NFPA codes, and recommendations/certifications for acceptance. Forward one copy of the report with attachments to the Naval Facilities Engineering Command Fire Protection Engineer.

D40 1.2.2 Performance Verification Testing

All systems shall have operational tests to demonstrate compliance with contract requirements and respective NFPA codes, International Building Code and as noted below. Test procedures shall be in full compliance with the respective NFPA codes, the equipment manufacturer recommendations, and UFC 3-600-10N. Provide all personnel, equipment, and materials for tests. Return trips to witness repeat acceptance tests due to failure of previous tests will be at the Contractor’s expense.

D40 1.2.2.1 Preliminary Inspections and Final Acceptance Testing

The FPQC Specialist shall personally witness all preliminary inspections of fire alarm/detection and suppression systems. Once preliminary inspections have been successfully completed, the FPQC Specialist shall submit a signed certificate to the QC Manager that systems are ready for final inspection and testing. The Naval Facilities Engineering Command Fire Protection Engineer will witness formal tests and approve all systems before they are accepted. The QC Manager shall submit the request for formal inspection at least 15 days prior to the date the inspection is to take place. The QC manager shall provide 10 days advance notice to the Contracting Officer and the activity Fire Inspection Office of scheduled final inspections.

D40 1.2.2.2 Final Life Safety/Fire Protection Certification

The FPQC Specialist shall provide certification that all life safety and fire protection systems have been installed in accordance with the contract documents, approved submittals, and manufacturer's requirements. This certification shall summarize all life safety and fire protection features, and shall bear the professional seal of the FPQC Specialist.

D40 1.2.2.3 System Manufacturers Representatives

The systems manufacturer technical representative shall be present for the final inspection and test for the following systems: fire alarm and detection, fire pump.

D40 1.2.2.4 Fire Suppression Water Supply and Equipment

The fire hydrants shall be inspected prior to backfilling the trench surrounding the fire hydrants. A report, including pictures, shall be provided to the Contracting Officer.

Fire pump tests shall be conducted in the presence of the pump, controller, and engine manufacturer technical representatives. The fire pump manufacturer shall also be present for the preliminary test of the fire pump system.

D40 1.2.2.5 Kitchen Hood Fire Extinguishing Systems

The kitchen hood fire extinguishing system shall contain water for the actual performance testing. The nozzles may be bagged in order to minimize damage from water spray.

D40 1.2.2.6 Spray-Applied Fire Proofing and Fire Stopping

See Section C1030 for requirements.

D40 1.2.3 Training

The contractor shall provide training for the active systems within 6 weeks of final acceptance of the systems. The training shall be scheduled at least 2 weeks in advance.

D40 1.3 DESIGN SUBMITTALS

Design Submittals shall be in accordance with Z10, *General Performance Technical Specifications*, UFGS section 01 33 10.05 20, *Design Submittal Procedures*, UFC 1-300-09N, *Design Procedures*and UFC 3-600-10N, *Fire Protection Engineering*.

D40 1.4 CONSTRUCTION SUBMITTALS

Submit construction submittals in accordance with PTS Section Z10, *General Performance Technical Specifications*. In addition to the Z10 requirements, the Designer of Record (DOR) shall approve the following construction submittals as a minimum:

All fire protection engineering submittals including:

a. Shop Drawings. Provide shop drawings for all systems.
b. Product Data. Provide product data for all equipment.
c. Design Data. Provide design data for all system calculations.
d. Test Reports
e. Certificates

D4010 FIRE ALARM AND DETECTION SYSTEMS

D401001 FIRE ALARM DISTRIBUTION

D401001 1.1 REMOTE ANNUNCIATORS

Remote annunciators shall have a minimum 80 character alphanumeric display with alarm acknowledge, alarm silence, and reset functions.

D401001 1.2 TRANSMITTED SIGNALS

Provide the following signals to be sent to the fire alarm receiving station:

a. Sprinkler Water Flow
b. Smoke Detector
c. Manual Pull Station
d. Supervisory (i.e., valve tamper switch, fire pump loss of power, fire pump phase reversal)
e. Duct Smoke Detector
f. Fire Pump Running

D4020 FIRE SUPPRESSION WATER SUPPLY AND EQUIPMENT

D402001 FIRE PROTECTION WATER PIPING AND EQUIPMENT

The design point of connection to the existing water supply shall require the approval of the Contracting Officer. The FP DOR shall conduct additional flow tests after contract award prior to any design submissions. Tests shall be conducted under the supervision of the Contracting Officer.

D4040 SPRINKLERS

D404001 SPRINKLERS & RELEASING DEVICES

D404001 1.1 DESCRIPTION

Areas subject to freezing shall be provided with a dry pipe system. Loading docks may be protected with dry-type sidewall sprinklers supplied by the wet-pipe system.

D404001 1.2 REQUIREMENTS

Utilize upright sprinklers with ordinary temperature rating and color to match finish in normally occupied rooms without a finished ceiling (i.e., laboratories, and other spaces with exposed ceilings).

D4090 OTHER FIRE PROTECTION SYSTEMS

D409001 CARBON DIOXIDE SYSTEMS

Not applicable.

D409002 FOAM GENERATING EQUIPMENT

D409002 1.1 SYSTEM CRITERIA

Not applicable.

D409002 1.2 SYSTEM OPERATION

Not applicable.

D409002 1.3 AFFF CONCENTRATE PUMPS

Not applicable.

D409002 1.4 FOAM CONCENTRATE STORAGE TANK

Not applicable.

D409002 1.5 LOW-LEVEL LOW-EXPANSION FOAM SYSTEM

D409002 1.5.1 Discharge Devices

Not applicable.

D409002 1.5.2 Test Header

Not applicable.

D409002 1.6 AUTOMATIC WATER CONTROL VALVE ASSEMBLY (DELUGE VALVE)

Not applicable.

D409002 1.7 FOAM SYSTEM RELEASING CONTROL SYSTEM

D409002 1.7.1 Manual Releasing Stations

Not applicable.

D409002 1.7.2 Flame Detectors

Not applicable.

D409002 1.7.3 Abort Switch

Not applicable.

D409003 CLEAN AGENT SYSTEMS

D409003 1.1 SYSTEM INSTALLATION

The system shall be supplied and installed by a factory-authorized distributor. The distributor shall be trained by the manufacturer to design, install, test, and maintain the system and shall be able to provide proof of training upon request.

D409003 1.2 RELEASING CONTROL SYSTEM

Where provided manual release stations shall be dual-action type located inside a clear plastic tamper cover that must be lifted prior to actuating the station. The words "fire" or "fire alarm" shall not appear on the cover. The station shall not require the breaking of glass to actuate. Unit shall have operating instructions clearly marked on the station cover. Unit shall be compatible with the control panel to which it is connected. Operation of a station shall result in immediate release of the clean agent system for that space.

D409004 HOOD & DUCT FIRE PROTECTION

Exhaust hoods with grease extractors listed by UL or FM are not required to have protection downstream of the grease extractor.

-- End Of Section --

THIS PAGE HAS BEEN INTENTIONALLY LEFT BLANK

SECTION D50

ELECTRICAL
11/10

D50 GENERAL

RFP Part 3 including the Engineering System Requirements (ESR) provide project specific requirements. The RFP Part 4, Performance Technical Sections (PTS) provide generalized technical requirements that apply to multiple facility types and include more requirements than are applicable to any one project. Therefore, only the RFP Part 4 requirements that apply to the project and further define the RFP Part 3 project specific requirements are required.

D50 1.1 NARRATIVE

This section covers installations inside the facility and out to the five foot line. See PTS Section G40, *Site Electrical*, for continuation of systems beyond the five foot line.

D50 1.2 ELECTRICAL DESIGN GUIDANCE

Provide the design and installation in accordance with the following references. This Performance Technical Specification (PTS) adds clarification to the fundamental requirements contained in the following Government Standards. The general requirements of this PTS section are located in PTS Section Z10, *General Performance Technical Specification*.

When all product Quality Control information is included in the Unified Facility Criteria (UFC) and there are requirement options identified in the ESR, then the Uniformat Level 4 titles (and possible subtitles) are included without additional verbiage. One example of this is D501090, OTHER SERVICE AND DISTRIBUTION.

D50 1.2.1 Government Publications

UNIFIED FACILITIES CRITERIA (UFC)

UFC 1-200-01	General Building Requirements(A reference in this PTS section to UFC 1-200-01 requires compliance with the Tri-Service Core UFCs that are listed in UFGS Section 01 33 10.05 20, which includes the following significant UFC(s):UFC 3-501-01, Electrical Engineering)
UFC 3-580-10	Navy and Marine Corps Intranet (NMCI) Standard Construction Practices

UNIFIED FACILITIES GUIDE SPECIFICATIONS (UFGS)

UFGS 26 23 00	Switchboards and Switchgear

UFGS 26 29 23	Variable Frequency Drive Systems Under 600 Volts
UFGS 26 32 13.00 20	Single Operation Generator Sets
UFGS 26 32 26	Motor Generator Sets, 400 Hertz
UFGS 26 33 53.00 20	Uninterruptible Power Supply (UPS)
UFGS 26 35 43	400 Hertz Solid State Frequency Converters
UFGS 26 36 23.00 20	Automatic Transfer Switches
UFGS 28 20 00.00 20	Electronic Security System (ESS), Commercial

D50 1.3 QUALITY ASSURANCE

Qualifications, certifications, and Test Plans indicated herein shall be submitted 45 calendar days prior to the expected date of execution. Notify the Contracting Officer 14 calendar days prior to all testing. Submit test results within 7 calendar days of completion of testing.

The Designer of Record is responsible for approving the submittals listed below.

D50 1.3.1 Qualified Testing Organization

Contractor shall engage the services of a qualified testing organization to provide inspection, testing, calibration, and adjustment of the electrical distribution system and equipment listed in paragraph entitled "Acceptance Tests and Inspections" herein. Organization shall be independent of the supplier, manufacturer, and installer of the equipment. The organization shall be a first tier subcontractor.

Submit name and qualifications of organization. Organization shall have been regularly engaged in the testing of electrical materials, devices, installations, and systems for a minimum of 5 years. The organization shall have a calibration program, and test instruments used shall be calibrated in accordance with NETA ATS.

Submit name and qualifications of the lead engineering technician performing the required testing services. Include a list of three comparable jobs performed by the technician with specific names and telephone numbers for reference. Testing, inspection, calibration, and adjustments shall be performed by an engineering technician, certified by NETA or the National Institute for Certification in Engineering Technologies (NICET) with a minimum of 5 years' experience inspecting, testing, and calibrating electrical distribution and generation equipment, systems, and devices.

D50 1.3.2 NEC Qualified Worker

Provide in accordance with NFPA 70. Qualified Workers shall be allowed to be assisted by helpers on a 1 to 1 ratio, provided such helpers are registered in recognized apprenticeship programs. Submit a certification confirming NEC Qualified Worker requirements.

D50 1.3.3 Qualified Telecommunications Worker

All installers assigned to the installation of telecommunications systems or any of its components shall be Building Industry Consulting Services International (BICSI) Registered Cabling Installation Technicians or have a minimum of 3 years experience in the installation of the specified copper and fiber optic cable and components. Include names and locations of two projects successfully completed using optical fiber and copper communications cabling systems. Include written certification from users that systems have performed satisfactorily for not less than 18 months. Include specific experience in installing and testing structured telecommunications distribution systems using optical fiber and Category 5e cabling systems.

D50 1.3.4 Material Standards

Ensure service support and provide manufacturer's nameplate in accordance with PTS Section Z10, *General Performance Technical Specification*.

D50 1.3.4.1 Warning Labels

Provide arc flash warning labels.

D50 1.3.4.2 Field-Required Nameplates

Provide laminated plastic nameplates for each switchboard, switchgear, panelboard, equipment enclosure, motor controller, relay, and switch. Each nameplate must identify the function and, when applicable, the position. Provide melamine plastic nameplates, 0.125 inch (3 mm) thick, white with black center core. Surface shall be matte finish. Corners shall be square. Accurately align lettering and engrave into the core. Minimum size of nameplates shall be 1-inch by 2-1/2 inches (25 mm by 65 mm). Lettering shall be a minimum of 0.25 inch (6.35 mm) high normal block style.

D50 1.3.5 Factory Testing

The Government reserves the right to witness all factory testing. The manufacturer shall have a calibration program that assures that all applicable test instruments are maintained within rated accuracy.

D50 1.3.6 Electrical System Startup and Testing

Submit test plans for approval. The test plans shall be tailored to the systems provided.

The test plan shall list make and model and provide functional description of the test instruments and accessories and shall describe the setup of the tests to be conducted. Test instruments shall be capable of measuring and recording or displaying test data at a higher resolution and greater accuracy than specified for the equipment's performance.

D50 1.3.6.1 Factory Trained Engineer

Provide a factory trained engineer to supervise start-up and testing as required in referenced specifications.

D50 1.3.6.2 Performance Verification Testing

The Contractor shall show by demonstration in service that all circuits and devices are in operating condition. Tests shall be such that each item of control equipment will function not less than five times. The Contractor shall provide all necessary test equipment, tools, fuel, load banks, labor, and materials for testing. As a minimum, all systems shall be tested in accordance with manufacturer's recommendations. Additional testing requirements for the various systems are described with those systems, hereinafter. The Contractor shall assure that all applicable test instruments are maintained within rated accuracy. Dated calibration labels shall be visible on all test equipment.

Submit a separate electrical field test plan in accordance with manufacturer's recommendations and that conforms to NETA ATS for each piece of Electrical Distribution Equipment and System requiring Performance Verification Testing.

The following items identify specific test requirements. Additional test requirements are contained in the applicable UFGS.

a. Panelboards - Field test each GFI and AFI circuit breaker with a UL 1436-certified outlet circuit tester to verify correct operation.
b. Motor control centers – Test motor control centers and motor starters in accordance with NETA ATS.
c. Transient voltage surge suppressors(TVSS) –

1) Inspect for physical damage and compare nameplate data with the drawings and specifications, if applicable. Verify from the nameplate data that the TVSS equipment is appropriate for the system voltage.

2) Verify lead length between the TVSS equipment and the circuit connection is less than one foot.

3) Verify wiring between the TVSS equipment and the circuit connection does not include high-inductance coils or sharp bends.

4) Confirm circuit breaker used for TVSS circuit

connection is sized in accordance with TVSS manufacturer's requirements.

5) Ensure TVSS equipment is grounded in accordance with TVSS manufacturer's requirements. Check the ground lead on each device for individual attachment to the ground bus or electrode.

6) Check tightness of connections in accordance with NETA ATS.

7) For TVSS equipment with visual indications of proper operation, verify that it displays normal operating characteristics.

d. Busway – Conduct standard tests for busway in accordance with NETA ATS.

e. Receptacles – Test GFI receptacles with a UL 1436-certified outlet circuit tester to verify correct operation.

f. Lighting - Aim photocell switches and locate light level sensors in accordance with the manufacturer's recommendations. Verify that equipment operates in accordance with user's requirements and in accordance with manufacturer’s recommendations. Fluorescent lamps on electronic dimming ballast control shall be burned in at full light output for 100 hours before dimming.

g. Telecommunication - Test telecommunications systems in accordance with applicable EIA/TIA requirements.

h. Public address and intercommunications systems - Tests shall include originating and accepting messages at each station, at proper volume levels, without cross-talk or noise from other links or non-designated units. Test shall utilize the phonetically balanced monosyllabic work intelligibility test in accordance with ANSI S3.2 (ASA 85). In order to be acceptable, a score of at least 75 percent must be obtained for each system test.

i. Community Antenna Television Systems - Confirm design and installation is in compliance with NCTA-02, 47 CFR 76.605 and in accordance with FCC proof of performance requirements. Test plan shall define tests required to ensure that the system meets technical, operational, and performance specifications. Test plan shall include plan for testing for signal leakage.

j. Electronic security systems (ESS) – Test ESS in accordance with UFGS requirements.

k. Grounding systems - Test the grounding system in accordance with NETA ATS.

l. Lightning protection - Upon completion of the installation, Contractor shall furnish the UL Lightning Protection Inspection Certificate certified to UL 96A for the system.

m. Emergency lighting - Test emergency lighting that is intended for means of egress in accordance with NFPA 101, Section 5-9. Confirm the emergency lighting system operates for a minimum of 90 minutes and emergency illumination satisfies NFPA 101, Section 5-9, specified levels.

n. Building Integrated or Mounted Photovoltaic System (BIMPV) - Start up report including system performance. System performance shall be compared to expected performance and shall include at a minimum solar irradiance, DC energy, AC energy, ambient air temperature and PV cell temperature. System performance shall be measured and reported for at least one full day. If the performance monitoring of the installed array indicates the array is not meeting its required performance predictions it shall be corrected by the Contractor at the Contractor's expense. Following correction, performance monitoring will again be performed until the array meets required performance predictions. Measurements made under actual installation and temperature will be normalized to Standard Test Conditions (STC).

D50 1.3.6.3 Acceptance Tests and Inspections

The Government reserves the right to witness all Acceptance Tests and Inspections, review data, and request other such additional inspections and repeat tests as necessary to ensure that the system and provided services conform to the stated requirements.

The Qualified Testing Organization shall provide the Acceptance Tests and Inspections test plan and perform the acceptance tests and inspections. Test methods, procedures, and test values shall be performed and evaluated in accordance with NETA ATS, the manufacturer's recommendations, and paragraph entitled "Field Quality Control" of each applicable specification section. Tests identified as optional in NETA ATS are not required unless otherwise specified. Equipment shall be placed in service only after completion of required tests and evaluations of the test results have been completed. Contractor shall supply to the testing organization complete sets of shop drawings, settings of adjustable devices, and other information necessary for an accurate test and inspection of the system prior to the performance of any final testing. Perform acceptance tests and inspections on Diesel-Electric Generators, Uninterruptible Power Supply (UPS) Systems, 400-Hertz Motor Generator Sets, 400-Hertz Solid State Frequency Converters, Automatic Transfer Switches, and Switchboards and Switchgear.

D50 1.4 DESIGN SUBMITTALS

Design Submittals shall be in accordance with PTS Section Z10, *General Performance Technical Specifications*, UFGS Section 01 33 10.05 20, *Design Submittal Procedures*, UFC 1-300-09N, *Design Procedures*, and UFC 3-501-01, *Electrical Engineering*.

In addition, UFGS sections listed below or in the body of the PTS text are to be used by the Designer of Record (DOR) as a part of the design submittal. If the UFGS products or systems are applicable to the project, the DOR shall edit these referenced UFGS sections and submit them as a part of the design

submittal specification. Edit the specification sections in accordance with the limitations stated in PTS Section Z10, *General Performance Technical Specifications*.

UFGS 26 23 00, *Switchboards and Switchgear*

UFGS 26 29 23, *Variable Frequency Drives System Under 600 Volts*

UFGS 26 32 13.00 20, *Single Operation Generator Sets*

UFGS 26 32 26, *Motor Generator Sets, 400 Hertz*

UFGS 26 33 53.00 20, *Uninterruptible Power Supply (UPS)*

UFGS 26 35 43, 400 *Hertz Frequency Converters*

UFGS 26 36 23.00 20, *Automatic Transfer Switches*

UFGS 28 20 00.00 20, *Electronic Security System (ESS), Commercial*

D50 1.5 CONSTRUCTION SUBMITTALS

Submit construction submittals in accordance with PTS Section Z10, *General Performance Technical Specifications*. In addition to the PTS Section Z10 requirements, the Designer of Record (DOR) shall approve the following construction submittals as a minimum:

Electrical Equipment, OMSI information for equipment, and Quality Assurance Submittals listed above.

Provide certification that all adjustable protective device settings have been set in accordance with the coordination study for the as-built equipment and configuration.

D5010 ELECTRICAL SERVICE AND DISTRIBUTION

D501001 MAIN TRANSFORMERS

Pad mounted distribution transformers shall be in accordance with PTS Section G40, *Site Electrical Utilities*.

D501002 SERVICE ENTRANCE EQUIPMENT

When a switchboard or switchgear is required, the Designer of Record shall utilize UFGS Section 26 23 00 for the project specification, and shall submit the edited specification section as a part of the design submittal for the project.

D501003 INTERIOR DISTRIBUTION TRANSFORMERS

D501004 PANELBOARDS

Panelboards shall comply with UL 67 and UL 50. UL 869A shall apply if used as service entrance equipment. Panelboards for non-linear loads shall be UL listed, including

heat rise tested, in accordance with UL 67, except with the neutral assembly installed and carrying 200 percent of the phase bus current during testing.

Provide molded case circuit breakers in accordance with UL 489. Ground fault circuit interrupting circuit breakers shall comply with UL 943. Arc fault circuit breakers shall comply with UL 489 and UL 1699.

D501005 ENCLOSED CIRCUIT BREAKERS

Provide molded case circuit breakers in accordance with UL 489. UL 869A shall apply if used as service entrance equipment. Provide with solid neutral when grounded conductor is present.

D501006 MOTOR CONTROL CENTERS

Motor control centers shall comply with UL 845, NEMA ICS 2, and NEMA ICS 3. Motor controllers shall comply with UL 508. Provide disconnecting means capable of being locked out for machines and other equipment to prevent unexpected startup or release of stored energy in accordance with 29 CFR 1910.147.

D501006 1.1 VARIABLE FREQUENCY DRIVES (VFD)

When Variable Frequency Drives are required, the Designer of Record shall utilize UFGS Section 26 29 23 for the project specification, and shall submit the edited specification section as a part of the design submittal for the project.

D501090 OTHER SERVICE AND DISTRIBUTION

D501090 1.1 TRANSIENT VOLTAGE SURGE SUPRESSORS (TVSS)

D501090 1.2 BUSWAY

Busway shall comply with NEMA BU 1 and UL 857.

D5020 LIGHTING AND BRANCH WIRING

D502001 BRANCH WIRING

Provide wiring and connections for special outlets where required.

All homerun circuits must contain no more than 3 phase conductors.

Switches shall comply with NEMA WD-1 and UL 20.

D502002 LIGHTING EQUIPMENT

Installation shall meet requirements of manufacturer's recommendations and the additional requirements for "Severe Seismic Disturbance" contained in ASTM E 580. Fixture support wires shall conform with ASTM A 641/A 641M, galvanized regular coating, soft temper.

D502002 1.1 BALLASTS

Electronic ballasts shall include a 5-year warranty.

D5030 COMMUNICATIONS AND SECURITY

D503001 TELECOMMUNICATIONS SYSTEMS

D503002 PUBLIC ADDRESS SYSTEMS

D503003 INTERCOMMUNICATIONS SYSTEMS

D503004 TELEVISION SYSTEMS

D503004 1.1 CLOSED CIRCUIT TELEVISION (CCTV) FOR VIDEO TRAINING

D503004 1.2 COMMUNITY ANTENNA SYSTEM (CATV)

D503005 SECURITY SYSTEMS

D503005 1.1 ELECTRONIC SECTURITY SYSTEMS (ESS)

When an ESS system is required, the Designer of Record shall utilize UFGS Section 28 20 00.00 20 for the project specification and shall submit the edited specification section as a part of the design submittal for the project.

D503005 1.2 PROTECTED DISTRIBUTION SYSTEMS (PDS)

Protected Distribution Systems shall be in accordance with UFC 3-580-10 and IA PUB-5239-22, Information Assurance Protected Distribution System (PDS) Guide Book.

D503005 1.3 SENSITIVE COMPARTMENTED INFORMATION FACILITIES (SCIF)

Electrical systems installed within SCIF spaces or facilities shall be in accordance with the Director of Central Intelligence Directive (DCID) 6/9.

D503090 OTHER COMMUNICATIONS AND ALARM SYSTEMS

D5090 OTHER ELECTRICAL SERVICES

D509001 GENERAL CONSTRUCTION ITEMS (ELECTRICAL)

D509002 EMERGENCY LIGHTING AND POWER

D509002 1.1 EMERGENCY LIGHTING

D509002 1.2 EMERGENCY GENERATORS

When an emergency generator is required, the Designer of Record shall utilize UFGS Section 26 32 13.00 20 for the project specification, and shall submit the edited specification section as a part of the design submittal for the project.

D509002 1.3 AUTOMATIC TRANSFER AND BYPASS/ISOLATION SWITCHES

When an Automatic Transfer Switch is required, the Designer of Record shall utilize UFGS Section 26 36 23.00 20 for the project specification, and shall submit the edited specification section as a part of the design submittal

for the project.

D509002 1.4 UNINTERRUPTIBLE POWER SUPPLY (UPS) SYSTEM

When a UPS system is required, the Designer of Record shall utilize UFGS Section 26 33 53.00 20 and shall submit the edited specification section as a part of the design submittal for the project.

D509003 GROUNDING SYSTEMS

D509004 LIGHTNING PROTECTION

D509005 ELECTRIC HEATING

D509006 ENERGY MANAGEMENT CONTROL SYSTEM

D509007 BUILDING PHOTOVOLTAIC SYSTEM

Provide building integrated or mounted photovoltaic (BIMPV) systems on building rooftops. System shall be a non grid-tied system and the system output voltage shall match the building voltage and be a 3-phase, 4-wire system.

Provide all labor, materials, equipment and supervision required to implement the design and to provide a fully operational system;

Provide PV modules with a 20-year limited manufacturer warranty that generates no less than 80% of the rated output under Standard Test Conditions (STC).

Provide manufacturer start-up, testing and balancing, and document final operation testing.

D509007 1.1 CODES AND STANDARDS

The PV system hardware and services shall meet or exceed all local, State and utility requirements, conform to the applicable codes and standards, and have passed the listing and qualification tests, listed below. (Comply with the most recent version of each document).

a. IEEE 1262 "Recommended Practice for Qualifications of Photovoltaic Modules".
b. PowerMark certification for PV modules.
c. IEEE Standard 928-1986, Recommended Criteria for Terrestrial Photovoltaic Power Systems (PV system performance criteria).
d. IEEE 929-2000, Recommended Practice for Utility Interface of Photovoltaic (PV) Systems.
e. Underwriters Laboratories 1741-2001 (UL Standard for Inverters and Charge Controllers).
f. Underwriters Laboratories 1703 (UL Standard for Listing Photovoltaic Modules).
g. Certification of PV Equipment: All PV modules, inverters, and electrical components shall be required to be listed or recognized by an appropriate and recognized United States Safety Laboratory (for example: UL or ETL).

D509007 1.2 PHOTOVOLTAIC ROOFTOP APPLICATION ANALYSIS

Provide a comprehensive "Photovoltaic Application Analysis" with a detailed description of system, application, site shading conditions and expected kW output of the rooftop photovoltaic applications. The analysis shall utilize the Solmetric Suneye or the Solar Pathfinderr shading analyzers to analyze the effects of the existing site shading conditions. Analysis shall include thick crystal vs thin film system options and anticipated PV output in kW and kWh per year. Coordinate rooftop application analysis with other equipment that is required to be placed on the roof to determine space available and proper solar orientation for photovoltaic equipment.

D509007 1.3 TECHNICAL REQUIREMENTS

The contractor work responsibilities include at a minimum: system design, equipment selection, and PV system installations. System shall be individually capable of providing peak power output of at least proposed PV system size, 208 or 480 volt, 3-phase, 4-wire power.

The final System configuration shall allow automatic operation without operator intervention. System design and equipment specifications shall minimize maintenance requirements. System shall include metering that must be incorporated with current AMI network (Advanced Metering Infrastructure) and planned energy metering projects.

The inverter(s) disconnects and associated electrical equipment must be located in an area that is accessible, weather-protected, and secure from vandalism and personal injury.

Disconnects and over current devices shall be mounted in approved boxes, enclosures, or panel boards. Disconnects and switches shall be DC rated when used in DC applications. Metal enclosures and boxes shall be bonded to the grounding conductor.

At a minimum, electrical meters shall capture the following data on individual system performance (minimum solar irradiance, DC power, AC real power, AC current, AC voltage, and power factor (recommend ION 8600 for AC); ambient air temperature, PV cell temperature, kW, and kWh). This data shall be captured at hourly intervals for a minimum one year. Units of temperature, power, and current shall be in Fahrenheit, Watts, and Amps respectively.

Transformers, if required, shall have a minimum efficiency based on factory test results of not less than the efficiency indicated in 10 CFR 431, Subpart K, paragraph 431.196(b). Transformers shall be housed in a NEMA 4X enclosures.

Mounting structures shall be corrosion resistant to marine environment.

D509007 1.4 OPERATORS MANUALS AND TRAINING

Operators manuals for each system component shall include detailed instructions on how to operate the system, programming and installation instructions, emergency operating procedures, default program values and set points, listing of field programmed variables and set points, equipment wiring diagrams, product model number, with Name, Address and Telephone number of local representative, and starting, operating, and shut down procedures. Include normal and emergency shut down procedures, schedule of

maintenance work, if any, recommended cleaning agents and methods, replacement parts list, including internal fuses, and warranty information.

Provide a formal 2-hour on-site training session instructing operators in the operation and maintenance of the new system, including operation and maintenance of inverters, disconnects and other system components. Instruct personnel in removal and installation of panels, including wiring and all connections. At the time of training the Contractor shall furnish, for the equipment specified, operation and maintenance manuals, record drawings and recommended spare parts lists identifying components adequate for competitive supply procurement for operation and maintenance of system.

D509090 OTHER SPECIAL SYSTEMS AND DEVICES

D509090 1.1 400 HERTZ SYSTEMS

The Designer of Record shall utilize UFGS Section 26 32 26 or UFGS Section 26 35 43 for the project specification, and shall submit the edited specification section as a part of the design submittal for the project.

--End Of Section--

SECTION E10

EQUIPMENT
11/10

E10 GENERAL

RFP Part 3 including the Engineering System Requirements (ESR) provide project specific requirements. The RFP Part 4, Performance Technical Sections (PTS) provide generalized technical requirements that apply to multiple facility types and include more requirements than are applicable to any one project. Therefore, only the RFP Part 4 requirements that apply to the project and further define the RFP Part 3 project specific requirements are required.

E10 1.1 GENERAL REQUIREMENTS

Where required by the project program, the contractor shall obtain the services of equipment specialists to specify any audiovisual, shop, fitness equipment, or other specialty equipment. Equipment specialists shall not have any affiliation with the product specified. All specialty equipment will be installed by qualified installers regularly engaged in installing the specialty equipment. Systems furnishings installers must be the systems furniture manufacturer's dealer of record.

E10 1.2 DESIGN GUIDANCE

Provide the design and installation in accordance with the following references. This Performance Technical Specification (PTS) adds clarification to the fundamental requirements contained in the following Government Standards. The general requirements of this PTS section are located in PTS Section Z10, *General Performance Technical Specification*.

Industry standards, codes, and Government standards that are referenced in the section text that are not found in the Unified Master Reference List (UMRL) in the Construction Criteria Base (CCB) at the Whole Building Design Guide Website , are listed below for basic designation identification. Comply with the required and advisory portions of the current edition of the standard at the time of contract award.

E10 1.2.1 Industry Standards and Codes

Loading Dock Equipment Manufacturers' Association (LODEM)

E10 1.2.2 Government Standards

UNIFIED FACILITIES CRITERIA (UFC)

UFC 1-200-01	General Building Requirements(A reference in this PTS section to UFC 1-200-01 requires compliance with the Tri-Service Core UFCs that are listed in UFGS Section 01 33 10.05 20, which includes the following significant UFC(s):UFC 3-101-01, ArchitectureUFC 3-120-10, Interior Design)

E10 1.3 PERFORMANCE VERIFICATION AND COMPLIANCE TESTING

Verification of satisfactory special equipment and furnishing systems performance shall be via Performance Verification Testing, as detailed in this section of the RFP.

E10 1.3.1 Field Tests for Dock Leveling Equipment

a. Roll-over Tests - Move roll-over load of 20,000 pounds (9,072 kg) over the dock leveler between the bed of a freight carrier and the building loading dock surface for ten cycles. With the ramp extension retracted and the ramp platform leveled with the building loading dock surface, run a 20,000 pound (9,072 kg) roll-over load over the ramp in various directions for 20 cycles. No permanent deformation or hydraulic fluid leakage shall occur subsequent to examination after these tests.

b. Drop Tests - Twice, drop test the dock leveler at the indicated rated capacity as follows: With the load on the platform and the load resting on a vehicle carrier bed not less than 10 inches (254 mm) above loading dock surface, pull the carrier or pull away from the lip, leaving the loading ramp unsupported. The measured vertical drop of the dock leveler taken at the point where the lip rests on the vehicle carrier shall not exceed 4 inches (102 mm) during each of the drop tests. Inspect the loading ramp after each drop and ensure no damage or distortion to the mechanical, electrical, or structural components. There shall be no leakage from the hydraulic system.

c. Acceptance Tests - Perform an acceptance test in the presence of the dock leveler manufacturer and the Contracting Officer subsequent to the roll-over load and drop tests. Conduct operation of the equipment through all of its motions and specified checks as follows: (a) extend lip to rest on a variety of freight carriers with beds up to 12 inches (305 mm) above and below deck level; (b) test 102 mm (4 inches) drop limitation with 7,000 pound (3,175 kg) load on ramp, evenly distributed; (c)test level compensation with the ramp, loaded with a minimum of 7,000 pounds (3,175 kg); and (d) test proper compensation (float) for various compression of counter-springs, with ramp loaded and unloaded.

E10 1.4 DESIGN SUBMITTALS

Design Submittals shall be in accordance with UFGS section 01 33 10.05 20, *Design Submittal Procedures*, UFC 1-300-09N, *Design Procedures*, UFC 3-101-01, *Architecture*, UFC 3-120-10, *Interior Design*.

E10 1.5 CONSTRUCTION SUBMITTALS

Submit construction submittals in accordance with PTS Section Z10, *General Performance Technical Specifications*. In addition to the Z10 requirements, the Designer of Record (DOR) shall approve the following construction submittals as a minimum:

Field tests of equipment, vault door, loading dock equipment, kitchen equipment and unit kitchens.

E1010 COMMERCIAL EQUIPMENT

E101005 SECURITY & VAULT EQUIPMENT

E101005 1.1 VAULT AND DOORS

The Vault ("Weapons Storage Area" (WSA) or "Armory", or other title according to the project program) space shall be designed in accordance with criteria in MIL-HDBK-1013/1A to provide at least 10 minutes of delay time against low and medium threat severity levels of forced entry. The space is required to be built to the construction standards described in MIL-HDBK-1013/1A for Class A vaults. The reinforced concrete must have minimum 28-day compressive strength of at least 3000 PSI (20,684 kPa) and the floor, walls, and ceiling/roof components of this space must all be cast in place and at least 8 inches (200 mm) thick. The door into the vault must be a GSA-Approved and labeled Class 5 Security Vault Door that conforms to Federal Specification AA-D-00600. Provide door manufacturer’s modified standard or custom Day Gate, designed for use with the vault door furnished, for access control and weapons issue. Except for the door opening, penetrations and openings through the structural “security” envelope of the floor, walls, and ceiling/roof of the Vault that are 96 sq. inches (618 sq. cm) or greater with the least dimension greater than 6 inches (150 mm) are not allowed. PTS Section D50, Electrical, includes requirements for Intrusion Detection System (IDS) within the space and for Security Lighting at the outside of the Vault Door to the space.

E101005 1.1.1 Set-backs

Where the perimeter walls of the WSA spaces are part of the facility exterior walls, the vault walls shall be set back from the exterior part of the exterior wall to allow at least 4 inches (100 mm) for the normal wall facing to cover the vault walls.

E101005 1.1.2 Egress

Where a WSA space exceeds 1000 square feet (90 sq m) in floor area, or will have more than eight occupants, the space shall have a minimum of 2 exits for safety purposes. When more than one entrance / exit is required, each shall be equipped with a Security Vault Door, with only one used for normal entry access.

E101005 1.2 SECURITY VAULT DOOR

Security Vault Door must be GSA-Approved and labeled Class 5 Security Vault Door that conforms to Federal Specification AA-D-00600. Provide GSA-Approved and labeled Class 5 Security Vault Door that conforms to Federal Specification AA-D-00600. Door(s) for normal or special entry access shall be Class 5, either Type IIR- right opening swing without optical device or Type IIL- left opening swing without optical device as determined by design arrangement, Style K- Key change combination lock, Design S- single lock.

Where a second or additional door is required for safety purposes, door(s) for exit only shall be Class 5, either Type IR- right opening swing with

optical device or Type IL- left opening swing with optical device as determined by design arrangement, Style K- Key change combination lock, Design B- no exterior hardware.

E101005 1.3 DAY GATE

Provide vault door manufacturer's modified standard or custom day gate designed for use with vault door furnished, for access control and weapons issue. Day gate construction shall be minimum 10 gage (3.4 mm) steel flattened and expanded metal welded to a 1 inch (25 mm) minimum steel channel or angle welded frame; expanded metal pattern shall be 1 inch by 1-3/4 inch (25 by 45 mm) diamond grid. Maximum clearance between sides, top and bottom of the day gate and the vault door-frame and floor shall be 1 inch (25 mm) when the day gate is closed. Provide gate hinged on same side as the vault door, swinging to 180 degrees into the vault from closed to open positions. Provide day gate with locking device operable from both sides; the outside by key and the inside by key, knob, lever, or deadbolt; the inside locking device shall either be positioned so that it is not accessible from the outside or it shall be operable by key only. Day gate shall include an issue port opening, cover with locking mechanism, and shelf. The issue port shall be a framed opening welded to the day gate frame with a hinged door cover. The hinged door shall be minimum 18 gage (1.2 mm) steel and shall be lockable from the inside only. The opening shall be 8 inches (200 mm) high and 12 inches (300 mm) wide; tolerances are plus or minus 0.125 inch (3.2 mm). When the issue port is closed, the hinged door cover shall match the opening to within 0.0625 inch (1.6 mm). The shelf shall be minimum 16 gage (1.5 mm) stainless steel, 12 inches (300 mm) deep by 12 inches (300 mm) wide to match the port opening, and shall be capable of withstanding a vertical force of 100 lbf (445 N) at any point without deformation. Provide the manufacturer’s standard painted finish to match that of the vault door. The day gate shall not interfere with the operation of vault door inner escape device.

E1020 INSTITUTIONAL EQUIPMENT

Institutional equipment includes items that are normally found in hospitals, laboratories, auditoriums, and libraries.

E102001 MISCELLANEOUS COMMON FIXED & MOVABLE EQUIPMENT

This section shall include fixed workbenches, hazardous and non-hazardous shop materials cabinetry, shop tools, and other fixed and movable equipment.

E102009 AUDIO-VISUAL EQUIPMENT

E102009 1.1 CEILING MOUNT FOR PROJECTOR

Provide the ceiling mounted hardware for a digital projector, to be coordinated with support blocking (see PTS Section C10, *Interior Construction*) and electrical and data connections (see Section D50, *Electrical*).

E1030 VEHICULAR EQUIPMENT

E103002 LOADING DOCK EQUIPMENT

This paragraph covers the requirements for dock bumpers, truck-trailer restraining devices, and industrial, mechanical and electro-hydraulic dock levelers of a fixed hinged type. All loading dock equipment shall be Navy certified.

Provide a Loading Dock Equipment System for the protection of service docks and for the loading and unloading of service vehicles.

E103002 1.1 DOCK LEVELERS

Based on the performance requirements of the project program, provide ANSI MH30.2 (see LOEDM) steel tread plate lip and platform, hinged and supported from beneath by steel framework that contains lifting, positioning, and lowering assembly. The design shall permit washing with water and detergents, and operation in an ambient temperature from 0 degrees F to plus 110 degrees F (–18 degrees C to plus 43 degrees C). Minimum roll over capacity shall be not less than 20,000 pounds (9,072 kg).

E103002 1.1.1 Height Adjustment

Provide a ramp with a minimum incline adjustment of 24 inches (600 mm). Divide 12 inches (300 mm) above and 12 inches (300 mm) below the platform height.

E103002 1.1.2 Loading Ramp Compensation

a. Freight Carrier Out of Level - Allow a minimum correction of one inch for each 18 inches (450 mm) and maximum of 4-inch (100 mm) correction of ramp width over the width of the ramp.
b. Loading and Unloading of the Freight Carrier - When the lip is extended, provide a 4-inch (100 mm) compensation for carrier spring deflection to allow full contact between the lip and the carrier bed.

E103002 1.1.3 Safety Devices

a. Electro-hydraulic System - Provide a device to automatically prevent a drop of more than 4 inches (100 mm) of the lip should the freight carrier move away from the dock leaving the lip unsupported.
b. Mechanical System - Provide a three-position safety system to limit platform fall to dock level and 4 and 8 inches (100 and 200 mm) below dock level.
c. Dock Bumpers - Provide laminated rubber, tire fabric or equivalent dock bumpers along the length of the loading dock.

E103002 1.1.4 Operation

a. Mechanical Control - Mechanical chain activated, with extension-spring operation and counter-balance non-manual, raising and lowering system.
b. Electro-Hydraulic Control - Provide dock leveler with pushbutton control, heavy-duty dust tight and oil tight rated in accordance with NEMA ICS 2, Part ICS2-216 for alternating current.
c. Construction and Materials - The entire live load carrying surface of the ramp and rear attachment shall be not less than

1/4-inch(6 mm) thick, 55,000 PSI (379,200 kPa) minimum yield strength, low alloy, non-skid steel tread plate.

d. Toe Guards - Provide sides or edges of the ramps which rise above the surrounding loading dock with sheet carbon steel skirts or toe guards of minimum 14 gage nominal thickness.

E103002 1.1.5 Electro-Hydraulic Lift System

Provide a complete and separate system for each dock leveler. Design system to withstand not less than 150 percent of the design operating pressure. Provide hose, fittings, pipe and tubing with working pressures based upon a minimum 4 to 1 safety factor of bursting pressure.

E103002 1.1.6 Electrical Requirements

NFPA 70, NEMA ICS 2, NEMA ICS 6 and NEMA MG 1

a. Motor - Conform to NEMA MG 1 and continuous duty or 60-minute time rated, industrial type, single speed rated for operating conditions.
b. Control - NEMA ICS 2, size 0 controller for heavy industrial service.
c. Transformer - Totally enclosed, self-cooled, dry type transformer. Incorporate circuit breakers with ground fault interrupting protection conforming to UL 943.

E103002 1.1.7 Structural Warranty

Present a manufacturer's warranty certifying the leveler against operational malfunction or structural failure, or both, for a period of 10 years from the date of acceptance by the Government. Warranty may exclude failure through overloading evidenced by member breakage or residual deformation; but it may not exclude breakage of welds or fastenings, fatigue breakage of components, or wear of moving parts. Provide warranty to cover the full costs of repairs, or replacements in case of a nonrepairable failure.

E103002 1.1.8 Accessories

a. Dock Truck or Trailer Restraining Device - Provide self-aligning device, with a positive restraining force of not less than 18,000 pounds (8,165 kilograms). Device shall service all truck or trailers with ICC bars located between 12 and 30 inches (300 and 750 mm) above ground level.

E103003 WAREHOUSE EQUIPMENT

This paragraph covers the requirements for storage racks, heavy duty shelving, material handling conveyors, and other warehouse equipment. See the project program.

E103004 AUTOMOTIVE SHOP EQUIPMENT

This paragraph covers the requirements for automotive vehicle lifts meeting the requirements of ANSI/ALI ALCTV-1998 standards, and other automotive shop equipment

such as pneumatic liquids delivery systems. See the project program.

E1040 GOVERNMENT FURNISHED EQUIPMENT

Refer to the project program.

E1090 OTHER EQUIPMENT

E109002 FOOD SERVICE EQUIPMENT

Provide Food Service Equipment and the kitchen design in accordance with UFC 4-722-01, *Dining Facilities*. This paragraph covers the items of commercial food service equipment. Included are items used for liquid and solid food storage, food preparation, display, serving, and clean up equipment. Provide 180 degree F (82 degree C) hot water or chemical treatment for sinks, dishwashers, pot washers, and exhaust ventilator wash down systems.

E109002 1.1 COMMERCIAL FOOD SERVICE EQUIPMENT

E109002 1.1.1 Equipment Materials

Fabricate custom and commercial equipment in accordance with NSP 2.

a. Stainless Steel Sheets - ASTM A167, 18-8 Composition, Type 302 or 304 or 316, non-magnetic, with a No. 4 finish on the exposed face.
b. Tubing - ASTM A 270
c. Framing and Cross Bracing - ASTM A 276, Type 302 or Type 304 or Type 316
d. Copper Tubing –

   1) Tube - ASTM B 88, Type K, annealed, for buried or embedment in concrete, and Type L, hard drawn, for above grade installation.

   2) Fittings - ANSI B16.18, above grade, ASME B16.22 or ASME B16.26, above or below grade.
e. Welded Joints - Use tungsten inert gas process. Use filler metal compatible with the material being welded. Make all visible welds ductile and of same color as adjoining surfaces. Coat welds in hidden areas that are not finished by grinding and polishing and the accompanying discoloration in the factory with a metallic-based paint to prevent progressive corrosion. Grind exposed welded joints flush with the adjoining material and finish and polish to match the adjoining surface. Grind off excess metal and smooth to a No. 4 finish. Remove imperfections such as pits, runs, sputter, cracks, low spots, voids and buckle.

   Penetrate entire thickness for the entire length of the joint; make joints flat, continuous and homogeneous with the sheet metal without reliance on straps under seams or spot welding. When stainless steel is joined to dissimilar metals, use stainless steel for fastening devices and welding material.
f. Solder - ASTM B 32, 95.5 tin-antimony solder or other lead-free solder for contact with potable water or food. Provide ASTM

B 32, alloy grade 50B for temperatures up to 150 degrees Fahrenheit (65 degrees Celsius).

E109002 1.1.2 Custom-Fabricated Counters, Dishwasher Counters, and Sinks

Fabricate of 14 gage (1.8 mm) stainless steel, with all shop seams and water tight welded corners ground smooth, and polished. Pitch all flat surfaces to drain and eliminate any chance of standing water. Counters and sinks shall be furnished complete with integral stainless steel backsplashes, side splashes, and legs with adjustable feet.

a. Sinks - Provide integral sinks in accordance with the requirements of NSF 2, and ASTM A112.19.3M. Provide minimum of 0.75 inch (19 mm) radius on all corners.

E109002 1.1.3 Exhaust Ventilators

Exhaust ventilators shall conform to NFPA 96, UL 710, and SMACNA DCS. Fabricate exhaust ventilators of minimum 18 gage stainless steel in segments not longer than 12'-0". Provide centrifugal grease-extracting design to remove 95% of matter from the air with non-removable extracting baffles located in the plenum chamber. Exhaust ventilators shall provide integral make-up air system in accordance with NFPA 96. Provide automatic wash-down cycle and fan control on adjacent wall.

a. Fire Damper - Provide mechanically driven damper and damper control. Activate by heat-sensing thermostat set to react to a temperature of 350 degrees F (177 degrees C) in exhaust duct at exhaust ventilators.
b. Fire Protection System - Provide a pre-engineered wet system in accord with NFPA 96.

E109002 1.1.4 Pre-Fabricated Walk-in Refrigerators and Freezers

Provide walk-in units manufactured for food service use conforming to NSF 7, UL 207, and UL 471. Provide refrigeration unit complying with ASHRAE 15. Outside compressors, if used, require winter controls, housing, and crankcase heater. Provide monitoring system to alarm abnormally low or high temperatures, and personnel safety alarm. If the unit utilizes the floor of the facility as an interior surface of the unit, it shall be insulated and separated from adjacent floors.

E109002 1.1.5 Food Waste Disposer - ASTM F917

E109002 1.1.6 Beverage Dispenser, Non-Carbonated, Refrigerated - ASTM F918

E109002 1.1.7 Food Slicing Machine - ASTM F919

E109002 1.1.8 Food Mixing Machine - ASTM F952

E109002 1.1.9 Powdered Iced Tea Dispenser - ASTM F1023

E109002 1.1.10 Frying and Braising Pan, Tilting - ASTM F1047

E109002 1.1.11 Food Cutter - ASTM F1126

E109002 1.1.12 Food Waste Pulper - ASTM F1150

E109002 1.1.13 Cooker, Steam - ASTM F1217

E109002 1.1.14 Ovens, Microwave - ASTM F1360

E109002 1.1.15 Vegetable Peeling Machine - ASTM F1371-04

E109002 1.1.16 Combination Oven - ASTM F1495

E109002 1.1.17 Food Processor - ASTM F1568

E109002 1.1.18 Kettle, Steam Jacketed (20-200 gal) Floor or Wall Mounted - ASTM F1602

E109002 1.1.19 Kettle, Steam Jacketed (32 oz-20 gal), Table Mounted - ASTM F1603

E109002 1.1.20 Freezer, Ice Cream, Soft Serve - ASTM F1604

E109002 1.1.21 Griddle, Single or Double Sided - ASTM F1919

E109002 1.1.22 Deep Fat Fryers - ASTM F1963

E109002 1.1.23 Dough Divider/Rounder - ASTM F1966

E109002 1.1.24 Dishwashing Machines

a. Hot Water Sanitizing Rack Type, ASTM F857
b. Hot Water Sanitizing Single Tank, ASTM F858
c. Hot Water Sanitizing, Multi-Tank, ASTM F859
d. Hot Water Sanitizing, Multi-Tank, Conveyor, ASTM F860
e. Chemical Sanitizing, Stationary Rack, ASTM F953
f. Chemical Sanitizing, Fresh Water Rinse, ASTM F1022
g. Hot Water Sanitizing, Oval Conveyor, Multi-tank, ASTM F1237

E109002 1.1.25 Pot and Pan Washing Machines

a. Heat Sanitizing, Oscillating Arm Type, ASTM F1202
b. Heat Sanitizing, Rotary Conveyor, ASTM 1203
c. Heat Sanitizing, Rack Type, Rotary Spray, ASTM F1114

E109002 1.2 RESIDENTIAL OR LIGHT COMMERCIAL ELECTRIC KITCHEN EQUIPMENT

E109002 1.2.1 Cooking Top

Conform to UL 197 and UL 858.

E109002 1.2.2 Freezer

UL 250, minimum 14 cubic feet (0.39 cubic meters), frost-free.

E109002 1.2.3 Refrigerator

UL 250, refrigerator with frost-proof freezer, minimum 14.6 cubic feet (0.41 cubic meters).

E109002 1.2.4 Freestanding Ice Maker

UL listed and NSF approved; self-contained, air-cooled model, minimum ice production of 355 pounds (161 kg) per 24 hours, and a minimum bin storage capacity of 180 pounds (82 kg) of ice cubes.

E109002 1.2.5 Griddle

UL 197 and NSF 2, built-in counter-top model. Minimum capacity shall be 260 pancakes or 420 hamburgers 4 ounces (110 g) per hour.

E109002 1.2.6 Microwave Oven

UL 923, minimum 1 cubic foot (0.03 cubic meter) capacity.

E109002 1.2.7 Oven

UL 858, self-cleaning and built-in.

E109002 1.2.8 Trash Compactor

UL 1086, under-counter model with storage compartment and 20 gallon (75 liter) trash disposal bag capacity.

E109002 1.2.9 Kitchen Exhaust Hood

NFPA 96 and NSF 2, factory fabricated of minimum 18 gage stainless steel.

E109002 1.2.10 Range Hood

UL 858, vented or non-vented with two-speed fan.

E109002 1.2.11 Dishwasher

UL 921 or UL 749 with detergent dispenser. For heavy-duty dishwasher, provide stainless steel commercial grade with approximately 300-dish per hour and 540 glasses per hour ratings.

E109002 1.2.12 Residential Garbage Disposal

UL 430, stainless steel, continuous feed with minimum 1/3 hp motor.

E109005 UNIT KITCHENS

E109005 1.1 UNIT KITCHENS

Unit kitchens must be complete with countertops, sinks, faucets, appliances, and accessories. Comply with DoD ABAAS in units for the disabled. Provide high pressure laminate or natural wood finish.

E109005 1.2 UNIT KITCHEN COMPONENTS

a. Cabinets - ANSI/FCMA A161.1 wood and plywood cabinetry with drainers and cabinet doors.

1) Provide 3/4-inch (19 mm) solid wood for face framing, drawer fronts, and shelves up to 36 inch (91.44 cm) wide. Cabinet body members require spline, biscuit, dowel or dado joining.

2) Provide 1/2-inch (12.8 mm) solid wood for drawer boxes with dovetail or dowelled joints.

3) Provide 3/8-inch (9 mm) plywood for cabinet box and toe board.

4) Provide cabinet doors of High Pressure Laminate covered medium density fiberboard or stile and rail doors.

b. Countertop - Provide ASTM 2124.3 and ASTM 2124.6, solid polymer countertop and 3-1/2 inch (89 mm) backsplash.

c. Sink and Faucet - Provide ANSI A112.18.1M, NSF International Standard 61 sink and faucet. Section 9 for sink and faucet. Provide large 22 gauge stainless steel sink with basket strainer in w with water stopper. Faucet shall be a washerless cartridge system

d. Refrigerator-Freezer – 5 cubic foot minimum undercounter refrigerator freezer. Provide interior light, defrost, adjustable shelving, adjustable thermostat features, and zero degree freezer.

e. Microwave Oven/Ventilation Hood Combination. Provide 1.4 cubic foot 900 watt minimum, microwave/hood above cooktop. Ductless hood must be convertible to ducted at the project site.

f. Cooktop – Provide drop-in 2 burner black ceramic cooktop with 1200 watt elements.

g. Dishwasher – Provide 24 inch wide Energy Star Large capacity dishwasher.

h. Accessories

1) Back wall shield and end wall shields when against an end wall.

2) Countertop fluorescent lighting.

3) Drawer slides rated for 100 pound capacity.

4) Door hinges to be adjustable, self-closing, and configured to allow screw application to cabinet door from two directions.

E109090 OTHER SPECIALIZED FIXED AND MOVABLE EQUIPMENT

Specialized fixed and moveable equipment not described by the other assembly categories.

E109090 1.1 WEAPONS RACKS

Weapons Storage Racks may be purchased or may be steel fabrications. Comply with OPNAVINST 5530.13c and standard operating procedure for the facility.

E109090 1.2 GEAR DRYING CAGES

Drying cages (racks) for SCUBA gear may be purchased or may be fabrications. Comply with standard operating procedures for the facility.

-- End of Section --

SECTION E20

FURNISHINGS
09/12

E20 GENERAL

RFP Part 3 including the Engineering System Requirements (ESR) provide project specific requirements. The RFP Part 4, Performance Technical Sections (PTS) provide generalized technical requirements that apply to multiple facility types and include more requirements than are applicable to any one project. Therefore, only the RFP Part 4 requirements that apply to the project and further define the RFP Part 3 project specific requirements are required.

E20 1.1 DESIGN GUIDANCE

Provide the design and installation in accordance with the following references. This Performance Technical Specification (PTS) adds clarification to the fundamental requirements contained in the following Government Standards. The general requirements of this PTS section are located in PTS Section Z10, *General Performance Technical Specification*.

Industry standards, codes, and Government standards referenced in the section text that are not found in the Unified Master Reference List (UMRL) in the Construction Criteria Base (CCB) at the Whole Building Design Guide Website , are listed below for basic designation identification. Comply with the required and advisory portions of the current edition of the standard at the time of contract award:

E20 1.1.1 Industry Standards and Codes

E20 1.1.2 Government Standards

UNIFIED FACILITIES CRITERIA (UFC)

UFC 1-200-01	General Building Requirements(A reference in this PTS section to UFC 1-200-01 requires compliance with the Tri-Service Core UFCs that are listed in UFGS Section 01 33 10.05 20, which includes the following significant UFC(s):UFC 3-10i-01, ArchitectureUFC 03-120-10, Interior Design)

E20 1.2 GENERAL REQUIREMENTS

The Contractor shall have an Interior Designer, certified by the National Council for Interior Design Qualification (NCIDQ), or a state and/or jurisdiction Certified, Registered, or Licensed Interior Designer prepare both the FF&E and the SID Package and participate in any design charettes to develop the building floor plan. As required, the Contractor shall obtain services of equipment specialists to specify the audiovisual, shop, or specialty equipment. The Interior Designer and any specialists shall not

be affiliated with any furniture dealership/vendor or manufacturer. The Government Interior Designer reserves the right to approve/disapprove the qualifications of the Contractor's Interior Designer.

Systems furnishings installers must be the systems furniture manufacturer's approved dealer of record. In addition, installation dealers must be located within a 100 mile radius of the project site unless approved by the government Interior Designer.

[Contractor to re-purpose/ recycle existing furniture if not relocated by the government. Contractor to provide verification that the existing furniture was not disposed of at the landfill.]

E20 1.3 DESIGN SUBMITTALS

Design Submittals shall be in accordance with Z10, *General Performance Technical Specifications*, UFGS section 01 33 10.05 20, *Design Submittal Procedures*, UFC 1-300-09N, *Design Procedures*, and UFC 03-120-10, *Interior Design*.

E20 1.4 CONSTRUCTION SUBMITTALS

Submit construction submittals in accordance with PTS Section Z10, *General Performance Technical Specifications*. In addition to the Z10 requirements, the Designer of Record (DOR) shall approve the following construction submittals as a minimum:

Art work and FF&E Package

E2010 FIXED FURNISHINGS

E201001 FIXED ARTWORK

E201002 WINDOW TREATMENTS

Provide interior window coverings, associated hardware and controls at each exterior window and at any interior view window where privacy may be required. Refer to the Project Program for size, pattern and style of window treatments. At a minimum, functional window coverings such as blinds or solar shades are required on all projects.

E201002 1.1 BLINDS

Venetian blinds shall be one-inch horizontal room-darkening commercial grade aluminum at a minimum thickness of 0.2mm (.008") (after coating) with a minimum of 45.72 slats per meter (15 slats per foot). Blinds shall be provided at each exterior window and at any interior window where privacy may be required. One full size sample shall be provided and installed for review and approval.

E201002 1.2 SHADES

Provide energy efficient solar shading systems for exterior windows. The

system shall maintain visibility while reducing glare, solar heat gain during the summer and heat loss during the winter. Openness configuration shall be no more than 5% for most areas. The system fabrics and components shall be dimensionally stable and shall be manufactured to withstand fading, fire, mildew, and soiling.

E201002 1.3 DRAPERIES AND HARDWARE

Draperies shall be manufactured under GSA contract as part of FF&E. Drapery can be accordion-fold, ripple-fold, or pinch-pleat with associated hardware suitable for the project requirements. All draperies shall meet the NFPA Code 701 California Fire Marshall's flame retardant requirements.

E201003 SEATING (FIXED)

E201003 1.1 AUDITORIUM, LECTURE AND CLASSROOM SEATING

The system shall permit the standards to be installed on radial lines from a common center for which concentric circles are determined with each row of units utilizing common middle standards. Standards in each row shall be placed laterally so the aisle-end standards will be in alignment as indicated on seating layout drawing. The angle of inclination of backs shall be adjusted for variations in sightlines. Mechanical attachment of components shall be of sufficient flexibility so that when permanently assembled they will compensate for the changing dimensions laterally between standards caused by convergence toward the center. Seat and back attachments shall absorb inaccuracies in lateral spacing of standards at point of attachment caused by unevenness of floor. Varying lateral dimensions of backs and seats shall be in accordance with approved seating layout. Minimum width of seating unit shall be 20 inches and may be used only to complete a specific row dimension.

E201003 1.2 FIXED TABLES FOR AUDITORIUM, LECTURE AND CLASSROOMS

Provide worksurfaces mounted to floor standards shall be tubular steel, sheet steel, or cast iron. The standards shall be formed to fit the floor incline so that the standards will be vertical. The feet shall be formed to eliminate tripping hazards and shall have holes for bolt attachment to the floor. Provide riser standards, cantilevered standards and aisle and end standards as required. Provide communications, data and power routing as required. Provide a high-pressure plastic laminate over medium density particleboard for the worksurfaces with coordinating vinyl or resin edge detail.

E2020 MOVABLE FURNISHINGS

Furnishings, Fixtures, and Equipment (FF&E) shall include furniture, shop equipment, audiovisual equipment, and specialty equipment. Weapon racks, drying cages, and lockers are not considered FF&E. FF&E shall be fully integrated with the building systems and finishes. FF&E may also include specialty items for which the customer activity shall be responsible for specifying.

Design and provide as required FF&E for all areas as developed during client programming. Design an FF&E package and prepare supporting plans and procurement data in accordance with the general interior design requirements in UFC 3-120-10.

E2020 1.1 FF&E PACKAGE

FF&E Package: Design and provide a fully usable and complete facility to include a FF&E movable furnishings package from Government supply sources according to Federal Acquisition Regulations. The FF&E will include, but not limited to, systems and modular furniture, training and conference furniture, seating, tables, artwork, decorative window covering, specialty furniture and equipment, dormitory room furnishings, and accessories. NAVSUP Blanket Purchase Agreements (BPA) must be used whenever possible. The government will provide separate funding for the FF&E package. Construction funds will not be used. The FF&E Package must include shipping, freight, handling, installation and the HAR percentage as applied to the final FF&E total cost.

E2020 1.1.1 Authorization

The government will provide separate funding for procurement of the FF&E package. Upon receipt of required funding, the Contractor shall be authorized by the Contracting Officer as a planned line item modification to the contract/task order to procure all FF&E using predominately negotiated Federal contracts. The amount of the modification will be the actual cost of these items from the Federal price schedules or NAVSUP BPAs, including any freight and installation charges from the furniture supplier as well as the contractor's FF&E Handling and Administration Rate (HAR). The HAR includes all of the prime contractor's effort related to storage, coordination, handling, administration of subcontractors, and all other associated costs and profit for the procurement of FF&E. The prime contractor will propose in the contract/task order solicitation the FF&E HAR. The contractor's proposed HAR may not exceed 5% of the total FF&E costs, as noted on the bid schedule. No other charges, expenses, fees, markups, etc will be authorized.

The government Interior Designer will approve the final FF&E submittal. The FF&E package will be presented to the Contracting Officer and the Contractor shall provide the FF&E exactly as specified and approved.

The Contractor will receive a letter of authorization from the Contracting Officer citing the name of the furniture dealer and other information to use when accessing the government supply sources. FF&E items are subject to the Buy American Act.

E2020 1.2 PURCHASE AND INSTALLATION

The Contractor shall coordinate the building completion date with the installation dealer specified in the FF&E Package. The Contractor or contractor's representative is responsible for the following: issuing purchase orders, receiving acknowledgements, sending copies of purchase orders to the installation dealer(s) specified in the FF&E package, and providing necessary deposits to furniture manufacturers.

The FF&E installation dealer(s) is responsible for the following: Receiving and installing all FF&E specified in the FF&E package, coordinating delivery and installation with the Contractor, inspecting for damage, providing delivery receipts to the Contractor, filing necessary freight claims,

hanging artwork, bulletin boards, etc., removing packaging material, cleaning up the site upon completion, and adhering to Contractor's safety requirements.

E2020 1.2.1 Use of GSA Schedules and Blanket Purchase Agreements (BPAs)

The prime contractor or FF&E dealer will be authorized to purchase supplies or services from the Navy Furniture BPAs for FF&E requirements, under the terms of the contract. The Contractor will receive a letter of authorization from the Contracting Officer citing the name of the furniture dealer and other information to use when accessing the government supply sources or BPAs.

E2020 1.2.2 Deposits

The Contractor should anticipate providing a deposit of between 30% to 50% of the furniture costs when placing their order.

The Contractor shall also anticipate possible manufacturer price increases. Recommend ordering FF&E product once funds are received to avoid incurring additional costs. Delayed production and delivery dates can be noted at the time of order placement to coincide with building completion dates. Any costs incurred due to manufacturer price increases will be the burden of the contractor.

E2020 1.2.3 Davis Bacon Wages

Davis Bacon wages do not apply to the FF&E installer from the government supply sources. The workforce for the FF&E installation and delivery shall be separate and distinct from the labor workforce performing under the construction contract.

E2020 1.2.4 Sales Tax

Exemptions for certain State or Local taxes may be available to the contractor and/or its subcontractors. The contractor shall take maximum advantage of all exemptions, including obtaining a resale permit, from State and Local taxation authorities whether available to it directly or available to the contractor based on an exemption afforded the government. The responsibility for paying applicable taxes rests with the contractor. State and local taxes applicable to the FF&E line will be included with the subcontractor's quote, if applicable. Any items purchased as building materials such as carpet are taxable.

E2020 1.2.5 Bonds

FF&E line item is not considered construction and the prime contractor shall not be required to secure any additional bond for the award of the FF&E line item unless otherwise indicated in the RFP. If any additional bond is required for the FF&E line item it is to be included in the prime contctor's FF&E HAR.

E2020 1.2.6 Unique Item Identification (IUID) and Validation

Unique item identification and valuation is a system of marking and

valuing items delivered to DoD that enhances logistics, contracting, and financial business transactions. The IUID policy is mandatory for all DoD contracts that require the delivery of items. An item is a single article or a single unit formed by a grouping of subassemblies, components or constituent parts. The contractor shall provide DoD Unique item identification, valuation and delivery of data for all required FF&E items for which the government's unit acquisition cost is $5,000 or more.

E2020 1.2.7 Buy American Act and Trade Agreement Act

All supplies under the FF&E line item are subject to the Buy American Act and Trade Agreement Act (TAA). The GSA contracts and NAVSUP Blanket Purchase Agreements are required to comply with the Buy American Act and TAA.

E2020 1.2.8 Small Business Requirements

The FF&E is subject to the Contractor's Small Business Goals however the government requires the furniture be purchased from NAVSUP Blanket Purchase Agreements (BPA). Most manufacturers on the Office Furniture BPA are large business and most manufacturers on the Dorm and Quarters BPA are small business. Installation dealers are small business. Under the terms of the BPA, the FF&E must be ordered directly through the GSA manufacturer. Using pass-through companies to achieve Small Business Goals will not provide the Contractor credit unless they manufacturer 20% or provide 50% of the service purchased. The government will not incur additional costs to use small business.

E2020 1.2.9 Installation

The FF&E package includes the installation of all furniture and furnishings as specified in the FF&E package. The installation dealer specified in the FF&E package will receive, store, if required, transport to the project site, off load, inside deliver, unpack, assemble, place/install, clean, if required, and dispose of all the trash for all furniture and furnishings. The Contractor's Interior Designer shall be responsible for specifying installation services and warehousing, as required, for all collateral equipment. It is the Contractor's responsibility to coordinate the building completion, occupancy, and furniture installation dates with the installation dealer specified in the FF&E package. Any costs associated with storing or delaying furniture shipments is the responsibility of the construction contractor.

E2020 1.2.10 Installation Warranty

All movable furnishings shall be installed in accordance with the manufacturer’s instructions and warranty requirements. All movable furnishings shall be level and aligned and all doors, drawers and accessories shall be level and aligned to open, close and otherwise operate smoothly and securely. All systems furniture shall be installed by the systems furniture manufacturer’s dealer of record and not the General Contractor. The Contractor shall repair, to the customer’s satisfaction, any/all damage to any facility finish that is a result of the furniture installation and correct all punch list

items for the furniture/furnishings.

E2020 1.2.11 Ordering Documentation

Two copies of all ordering documentation shall be provided to the Contracting Officer including Factory Order number (FO) and warranty information.

E2020 1.2.12 Post Award Changes

After award of the FF&E line item modification, any request to change the FF&E items must be submitted on the Contracting Officer. The FF&E modification has been accepted, priced, and negotiated based on specific line items as detailed in the final package. Those items have been agreed to considering color, specific type and quality of material, price, sustainability, life cycle, and dealership service. The Government will expect and require the contractor to provide exactly those items. Should changes become necessary, careful consideration is required to ensure that equivalent quality, price and other aspects of the item is maintained. Otherwise, price adjustments must be negotiated. The Contracting Officer will obtain approval from the Government Interior Designer/Collateral Equipment Manager in consultation with the client for any changes to the FF&E.

Post award FF&E manufacturer's price increases are the responsibility of the Contractor and shall not be transferred to the government. Recommend ordering FF&E product once funds are received to avoid incurring additional costs. Delayed production and delivery dates can be noted at the time of order placement to coincide with building completion dates.

E2020 1.3 BEST VALUE DETERMINATION

A best value determination is required by FAR 8.404 when placing orders against Federal Supply Schedules for the selection of furniture and furnishings. A BVD must also be provided for FF&E installation services. Best Value is defined in FAR 2.101 as ensuring that the order to be placed under a Federal Supply Schedule results in the lowest overall cost alternative (considering price, special features, administrative costs and client's needs) to meet the government's needs.

The Contractor's Interior Designer is responsible for the following written BVD justifications:

$3,000 or less: For any procurement in the FF&E package with a value of $3,000 or less, the interior designer may utilize any BPA holder. If the BPA holders cannot supply the item, then any other manufacturer may be utilized.

Greater than $3,000 and $150,000 or less: for any procurement in the FF&E package with a value greater than $3,000 and $150,000 or less, the contractor's interior designer shall always review pricing from at least three manufacturers as well as UNICOR. In addition to the review of published list prices, the contractor's interior designer must confirm the pricing with the vendor. Manufacturer's quotes are NOT required. The BVD form must be completed and submitted for all FF&E procurements greater than

$3,000 and $150,000 or less.

Greater than $150,000: The contractor's interior designer shall solicit proposals from all BPA holders under the applicable group for FF&E procurements greater than $150,000. UNICOR must always be solicited. The contractor's interior designer shall develop performance criteria and project requirements based on a generic design for the BPA holders and UNICOR to develop a price and performance proposal. The BVD form must be completed and submitted for all FF&E procurements greater than $150,000 and manufacturer's quotes and a summary of all proposals must be attached.

Federal Prison Industries (UNICOR) must be considered as part of all BVDs. This must be done by sending an email with the requirements and evaluation criteria If they are not comparable in one or more areas of price, quality, and time of delivery, the designer can specify product under NAVSUP BPA or GSA schedule.

The best value determination shall address issues such as space planning; human factors data related to anthropometrics (reach, clearance, adjustability), space, and acoustics; ergonomics; product quality (including construction and materials); sustainability features, product warranties; history of the product and/or manufacturer; ability to service products through dealers or others within a certain geographical range of the project; price (including freight); aesthetics; appropriateness; and lighting, power and telecommunications systems management and/or coordination as related to the facility (when applicable); and other project specific factors as identified and/or required. Emphasis shall be to create a fully integrated design solution by providing quality products to meet the functional needs of the customer. Customer preferences shall be considered. The focus shall be on the best overall value. Use the GSA Best Value Determination forms provided in Part 6 of this RFP as guidelines for information to be provided.

E202001 MOVABLE ART WORK

The Contractor shall provide artwork for wall installation as part of the FF&E Submittal according to the project program. Installation of artwork to be completed by installation dealer specified in the approved FF&E package. Type of artwork to be determined by client requirements and budget as described in the Project Program for the project. Install framed artwork 63 inches (1600 mm) on center above finished floor. Include security mounting hardware as required.

E202002 MODULAR PREFABRICATED FURNITURE

E202002 1.1 FURNITURE SYSTEMS

Provide products that meet the NAVFAC performance specifications for systems furniture. The Government Interior Designer must approve any other systems furniture manufacturer. The typical workstation shall maximize each allocated space with worksurfaces and overhead closed storage with a surface to accommodate a Government provided computer. An attached articulated keyboard/mouse tray shall be selected or provided. Provide a monitor lift if required by the project program.

Powered raceways that will accommodate data and voice wire management shall be completely coordinated with all facility systems. The Contractor's

Interior Designer shall ensure the coordination of all electrical/data and furniture locations. Use of power poles will not be permitted to power FF&E. The Contractor shall provide and coordinate all telecommunication receptacles and outlet requirements (i.e. RJ 11/45 receptacles and cover plates) with the Contractor's Interior Designer and the systems furniture installer. The Contractor shall hardwire all pre-wired furniture with the building systems, and coordinate all IT and telephone connections.

E202002 1.2 MODULAR FREESTANDING FURNITURE AND WORKSTATIONS

Provide products that meet the NAVFAC performance specifications for modular freestanding furniture including wood. Provide modular furniture with electrical/data cable trays and grommet holes for private offices and smaller work areas. An attached articulated keyboard/mouse tray (and monitor lift if required by the project program) shall be selected. Wood surfaces shall be provided as appropriate. Include accommodation for a Government provided computer and printer.

E202003 FREESTANDING FURNITURE

E202003 1.1 SEATING

E202003 1.1.1 Task Seating

Provide task seating that is fully ergonomic and coordinated by finish and scale to the workstation. Seating specifications to include: adjustable arms, back, height, and seat pan; 5 star base, appropriate castors for floor surface, lumbar support and availability in a minimum of two (2) sizes. Task seating can be from the same manufacturer as the systems or major furniture supplier or other seating manufacturer as approved by the government Interior Designer, provided it is determined to be a BPA "Best Value".

E202003 1.1.2 Lounge, Reception and Guest Seating

Provide lounge, reception and guest seating with upholsteries consistent with the Project Program. Seating shall be easily reupholstered or have removable covers.

E202003 1.1.3 Training Room Seating

Provide seating with passive ergonomic features in that the seat and back offers some synchronized movement to allow the person seated to change positions. The support can be legs, sled base or single pedestal with 5 star base and casters as determined by user requirements. Provide high density stack chairs or nesting chairs as required. Provide attached, storable tablet arm as required.

E202003 1.2 STORAGE AND FILING

Provide freestanding storage units, file cabinets and file safes to accommodate the specific and unique storage requirements of the user. Coordinate closely with storage provided in PTS Section E10, Equipment, for high density filing.

E202003 1.3 CHILD DEVELOPMENT CENTERS

Provide all child care and classroom furnishings such as cribs, rocking chairs, feeding chairs, tables, seating, toy storage, book display storage, activity centers, freestanding floor activity toys, and any other required furnishings. Outdoor structural play equipment may be required. The cribs shall be of stainless steel construction. The chairs and tables shall be appropriately sized for each age group.

E202003 1.4 TRAINING/CONFERENCE ROOM FURNISHINGS

E202003 1.4.1 Tables

Provide single or multi-person worksurfaces or tables as determined from user requirements. Where computers are used, provide tables with wire management capability or pre-wired tables to accommodate data/telecommunications requirements. Powered raceways that will accommodate data and voice wire management shall be completely coordinated with all facility systems. The Contractor's Interior Designer shall ensure the coordination of all electrical/data and furniture locations. The Contractor shall provide and coordinate all telecommunication receptacles and outlet requirements, hardwire all pre-wired furniture with the building systems and coordinate all IT and telephone connections.

E202003 1.4.2 Fixed Presentation Furnishings

Provide markerboards with porcelain on steel writing surfaces. Coordinate with building construction to include appropriate blocking or structural support for the installation of markerboards and tackboards.

E202003 1.4.3 Movable Presentation Furnishings

Provide audio-visual carts, lecterns, multi-media presentation cabinets to accommodate power/data requirements.

E202003 1.5 DINING ROOM FURNISHINGS

E202003 1.5.1 Cafeteria, Dining Hall Furnishings

Provide stackable seating and associated dollies for transport and storage, tables with folding or fixed legs or flip tops, and associated mobile carts for transport and storage, and trash and recycling containers.

E202003 1.5.2 Executive Dining Furnishings

Provide premium quality dining furnishings to include tables, chairs, buffet and serving units, hutches and cabinets as require by the Project Program.

E202004 RUGS & ACCESSORIES

E202004 1.1 RUGS

Provide Area or Accent rugs. Refer to the Project Program for requirements.

E202004 1.2 LAMPS

Provide decorative lamps. Refer to the Project Program for requirements.

E202004 1.3 INTERIOR LANDSCAPING

Provide artificial plants of a variety of sizes and 'species' to provide interior landscaping, including planters or containers for artificial plants to coordinate with the interior finishes and furnishings of the project.

E202004 1.4 OTHER DECORATIVE ITEMS

Refer to the Project Program for requirements.

E202090 OTHER MOVABLE FURNISHINGS

E202090 1.1 MISCELLANEOUS ITEMS

E202090 1.1.1 Containers

Provide waste receptacles, recycling containers, and ash urns as required.

E202090 1.1.2 Accessories

Provide clocks, wall mounted or freestanding literature and coat racks, and mirrors as required.

E202090 1.1.3 Small Equipment

Provide small appliances such as coffee pots, microwaves, refrigerators, washers, dryers, and icemakers, as required.

E202090 1.1.4 Special Equipment

Provide mailroom work and storage tables, mail sorter units, carts and equipment tables as required.

-- End of Section --

THIS PAGE HAS BEEN INTENTIONALLY LEFT BLANK

SECTION F10

SPECIAL CONSTRUCTION
11/10

F10 GENERAL

RFP Part 3 including the Engineering System Requirements (ESR) provide project specific requirements. The RFP Part 4, Performance Technical Sections (PTS) provide generalized technical requirements that apply to multiple facility types and include more requirements than are applicable to any one project. Therefore, only the RFP Part 4 requirements that apply to the project and further define the RFP Part 3 project specific requirements are required.

F10 1.1 DESIGN GUIDANCE

Provide the design and installation in accordance with the following references. This Performance Technical Specification (PTS) adds clarification to the fundamental requirements contained in the following Government Standards. The general requirements of this PTS section are located in PTS Section Z10, *General Performance Technical Specification*.

Industry standards, codes, and Government standards referenced in the section text that are not found in the Unified Master Reference List (UMRL) in the Construction Criteria Base (CCB) at the Whole Building Design Guide Website , are listed below for basic designation identification. Comply with the required and advisory portions of the current edition of the standard at the time of contract award.

F10 1.1.1 Government Standards

UNIFIED FACILITIES CRITERIA (UFC)

UFC 1-200-01	General Building Requirements(A reference in this PTS section to UFC 1-200-01 requires compliance with the Tri-Service Core UFCs that are listed in UFGS Section 01 33 10.05 20, which includes the following significant UFC(s):UFC 3-101-01, ArchitectureUFC 03-301-01, Structural Engineering)

F10 1.2 PERFORMANCE VERTIFICATION AND ACCEPTANCE TESTING

Verification of satisfactory special construction system performance shall be via Performance Verification Testing, as detailed in this section of the RFP. Provide special tests and special inspections in accordance with UFGS Section 01 45 00.05 20, *Design and Construction Quality Control*.

F10 1.3 DESIGN SUBMITTALS

Design submittals shall be in accordance with Z10, *General Performance Technical Specifications*, UFGS section 01 33 10.05 20, *Design Submittal*

Procedures, UFC 1-300-09N, *Design Procedures*, and UFC 3-101-01, *Architecture*, and UFC 3-301-01, *Structural Engineering*.

F10 1.4 CONSTRUCTION SUBMITTALS

Submit construction submittals in accordance with PTS Section Z10, *General Performance Technical Specifications*. In addition to the Z10 requirements, the Designer of Record (DOR) shall approve the following submittals as a minimum:

All structural elements necessary for construction.

For a pre-engineered metal building, provide shop drawings showing engineering data and complete building drawings, signed and sealed by a registered professional engineer.

F1010 SPECIAL STRUCTURES

F101001 METAL BUILDING SYSTEMS

F101001 1.1 DESIGN REQUIREMENTS

The metal building manufacturer shall have AISC FCD, category MB certification. The Metal Building System design shall be in accordance with the Metal Building Manufacturers Association (MBMA) *Low Rise Manual*.

All structural design shall comply with the provisions of PTS Section B10, *Superstructure*. The steel structure shall be as designed by the structural engineer. If used for thrust bracing, tie rods shall be concrete encased. Design framed openings structurally.

F101001 1.1.1 Additional Roof Design Requirements

a. Roof Decking – In addition to any other load requirements, roof decking shall be designed to support a 200-pound (91 kg) concentrated load at mid-span on a 12-inch (300 mm) wide section of deck.
b. When used as a diaphragm, roof decks shall be designed in accordance with SDEI DDM.

F101001 1.1.2 Deflection

a. Structural Members

1) Maximum deflection of main framing members and for roof members shall not exceed values required by the IBC.

2) Purlins and Roof Panels: The deflection due to live, snow, or wind shall not exceed L/180. The design analysis shall establish that the roof when deflected under dead plus live or snow loads will not result in a negative gradient. Maximum deflections shall be based on sheets continuous across two or more supports with sheets unfastened and free to deflect. Provide bracing of purlin compression flanges as required to resist applied loading.

b. Wall Panels - Maximum deflection of wall panels due to wind loads

shall be as required by the IBC and UFC.

F101001 1.2 WALL AND ROOF MATERIALS

F101001 1.2.1 Aluminum/Zinc-Coated Steel Sheet

ASTM A792/ A792M, AZ 55.

F101001 1.2.2 Aluminum Sheet

Alloy 3004 Alclad conforming to ASTM B209.

F101001 1.3 FRAMING AND STRUCTURAL MEMBERS

F101001 1.3.1 Steel

ASTM A992 / A992M, ASTM A529/ A529M, ASTM A572/ A572M, or ASTM A588/ A588M.

F101001 1.3.2 Aluminum

ASTM B221 or ASTM C308.

F101001 1.3.3 Structural Tube

ASTM A500 or ASTM B221.

F101001 1.4 MISCELLANEOUS ITEMS

F101001 1.4.1 Fasteners

Fasteners shall be compatible with the materials they are fastening to, be gasketed when exposed to weather to prevent leaks, and shall provide both shear and tensile strengths not less than 750 pounds (3,336 N) per fastener. The main fastening system shall use concealed fasteners, however, when exposed fasteners are needed, color fasteners shall be color coated to match wall/roof panels.

F101001 1.4.2 Light Transmitting Roof Panels (Non-Insulated)

ASTM D3841, Type II, Grade 1

F101001 1.4.3 Insulation

Blanket-type fiberglass insulation with a factory applied facing on one side and having a permeance rating of 0.05 or less in accordance with ASTM E96.

a. Flame Spread Rating 75 or less, and a Smoke Developed Rating of 150 or less when tested in accordance with ASTM E84.
b. Insulation R-value in accordance with ASTM C236 as determined by energy use analysis or identified in the RFP.

F101001 1.5 FINISH

Factory Color Finish - Provide factory applied baked coatings to the exterior

and interior of metal wall panels and metal accessories. Provide exterior finish top coat of 70 percent inorganic pigments with 0.8 mil dry film thickness (DFT). Provide exterior primer standard with panel manufacturer but not less than 0.8 mil DFT over the color topcoat and edge coating for projects within 300 feet (91 meters) of a water shoreline or industrial environments. Field apply 70 percent PVDF clear coat to unfinished panel edges or field cut panels. Interior finish exposed to sun or rain shall be the same coating and DFT as the exterior coating. Interior finish protected from sun or rain exposure shall receive 1.0 mil DFT coating of siliconized polyester (SMP) resin coating with organic or blended pigments and manufacturer’s standard primer.

F1030 SPECIAL CONSTRUCTION SYSTEMS

F103001 VAULTS

This paragraph is for prefabricated vaults. See PTS Section E10, Equipment, for vault doors and day gates.

-- End of Section --

SECTION F20

SELECTIVE BUILDING DEMOLITION
02/11

F20 GENERAL

RFP Part 3 including the Engineering System Requirements (ESR) provide project specific requirements. The RFP Part 4, Performance Technical Sections (PTS) provide generalized technical requirements that apply to multiple facility types and include more requirements than are applicable to any one project. Therefore, only the RFP Part 4 requirements that apply to the project and further define the RFP Part 3 project specific requirements are required.

F20 1.1 DESIGN GUIDANCE

Provide the design and installation in accordance with the following references. This Performance Technical Specification (PTS) adds clarification to the fundamental requirements contained in the following Government Standards. The general requirements of this PTS section are located in PTS Section Z10, *General Performance Technical Specification*.

Industry standards, codes, and government standards that are referenced in the section text that are not found in the Unified Master Reference List (UMRL) in the Construction Criteria Base (CCB) at the Whole Building Design Guide Website , are listed below for basic designation identification. Comply with the required and advisory portions of the current edition of the standard at the time of contract award.

F20 1.1.1 Industry Standards

Refer to UMRL for reference designation identification.

F20 1.1.2 Government Standards

UNIFIED FACILITIES CRITERIA (UFC)

UFC 1-200-01	General Building Requirements(A reference in this PTS section to UFC 1-200-01 requires compliance with the Tri-Service Core UFCs that are listed in UFGS Section 01 33 10.05 20, which includes the following significant UFC(s):UFC 3-101-01, Architecture)
UFC 3-800-10N	Environmental Engineering for Facility Construction

UNIFIED FACILITIES GUIDE SPECIFICATIONS (UFGS)

UFGS 01 57 19.00 20	Temporary Environmental Controls
UFGS 01 57 19.01 20	Supplementary Temporary

	Environmental Controls
UFGS 02 82 14.00 10	Asbestos Hazard Control Activities
UFGS 02 83 19.00 10	Lead Based Paint Hazard Abatement, Target Housing and Child Occupied Facilities

U.S. ARMY CORPS of ENGINEERS (USACE)

EM 385 -1-1	(2008) Safety -- Safety and Health Requirements or latest edition including changes

F20 1.2 QUALITY ASSURANCE

Materials and assemblies installed in the work shall be inspected and found to be in compliance with industry standards prior to acceptance of the work. Items found not to be in compliance shall be removed, or corrective measures taken, to assure compliance with the referenced standard. Disposal of materials shall be as specified and performed in a manner to protect workers and existing structures to remain.

F20 1.3 PERFORMANCE VERIFICATION AND ACCEPTANCE CRITERIA

Compliance with the requirements will be determined by a review of the design and construction submittals and by field inspection. See UFGS Section 01 33 10.05 20, *Design Submittal Procedures*, and UFGS Section 01 33 00.05 20, *Construction Submittal Procedures*, for additional requirements.

F20 1.4 DESIGN SUBMITTALS

Design Submittals shall be in accordance with Z10, *General Performance Technical Specifications*, UFGS section 01 33 10.05 20, *Design Submittal Procedures*, UFC 1-300-09N, *Design Procedures*, and UFC 3-800-10N, *Environmental Engineering for Facility Construction*.

F20 1.5 CONSTRUCTION SUBMITTALS

Submit construction submittals in accordance with PTS Section Z10, *General Performance Technical Specifications*. In addition to the Z10 requirements and if applicable to this project, the Designer of Record (DOR) shall obtain governing body approval for the construction submittals contained in the following UFGS sections and USACE Safety Manual as a minimum:

UFGS 01 57 19.05 20, *Temporary Environmental Controls for Design-Build*

UFGS 01 57 19.01 20, *Supplementary Temporary Environmental Controls*

UFGS 02 82 14.00 10, *Asbestos Hazard Control Activities*

EM 385-1-1, *Safety and Health Requirements*, latest edition including changes

a. Engineering Safety Survey

b. Demolition Plan/ Deconstruction Plan

F2010 BUILDING ELEMENTS DEMOLITION

All demolition materials and appurtenances shall be properly disposed and in accordance with all applicable regulations. Maximize the use of deconstruction and recycling services. Before demolition can commence, any hazardous materials shall be abated in accordance with the requirements of the ESR and other parts of the RFP. Provide a Demolition Plan/ Deconstruction Plan that is based on a Registered Engineers Survey in accordance with EM 385-1-1 and has been approved by the DOR. The Contractor shall obtain approval from the Contracting Officer for the proposed demolition plan and work/outage schedule prior to demolition activities.

F2010 1.1 GENERAL DEMOLITION

The work includes demolition, salvage of identified items and materials and removal of resulting rubbish and debris. Rubbish and debris shall be removed from Government property daily, unless otherwise directed. Materials that cannot be removed daily shall be stored in areas specified in the approved Demolition Plan as described in UFGS 01 57 19.00 20.

F2010 1.2 UTILITIES

Remove existing utilities and terminate in a manner conforming to the nationally recognized code covering the specific utility. Disturbance to utilities can not cause a failure to utilities to remain operational, unless a planned outage is approved by the FEAD/ROICC and coordinated with on-site personnel.

F2010 1.3 DUST CONTROL

Perform dust control activities in accordance with approved Dirt and Dust Control Plan as described in UFGS 01 57 19.00 20.

F2010 1.4 TRAFFIC CONTROL

Where pedestrian, vehicle, aircraft safety is endangered, use traffic barricades.

F2010 1.5 WEATHER PROTECTION

For portions of the building to remain, protect building interior, materials, and equipment from weather at all times.

F2010 1.6 BURNING

Perform burning operations in accordance with the ESR.

F201001 SUBSTRUCTURE & SUPERSTRUCTURE

Perform substructure or superstructure demolition work in accordance with the ESR.

F201002 EXTERIOR CLOSURE

Perform exterior closure demolition work in accordance with the ESR.

For occupied buildings ensure openings to the exterior are secured by the end of the work shift.

F201003 ROOFING

Perform roofing demolition work in accordance with the ESR.

For removal and re-roofing projects, remove only as much roofing as can be re-covered by the end of the work shift.

F201004 INTERIOR CONSTRUCTION & FINISHES

Perform interior construction & finishes demolition in accordance with the ESR.

F201005 CONVEYING SYSTEMS

Perform conveying systems demolition in accordance with the ESR.

F201006 MECHANICAL SYSTEMS

Perform mechanical systems demolition in accordance with the ESR.

F201007 ELECTRICAL SYSTEMS

Perform electrical systems demolition in accordance with the ESR.

F201008 EQUIPMENT & FURNISHINGS

Perform special equipment and furnishing demolition in accordance with the ESR.

F201009 OTHER NON-HAZARDOUS SELECTIVE BUILDING DEMOLITION

Perform non-hazardous selective building demolition in accordance with the ESR.

F2020 HAZARDOUS COMPONENTS ABATEMENT

Prior to starting work, conduct any additional testing that may be needed to provide a final design and comply with all applicable Federal, regional, state and local regulations. Refer to UFC 3-800-10N, *Environmental Engineering for Facility Construction*, for restrictions and for additional requirements and criteria.

F2020 1.1 PRIVATE QUALIFIED PERSON (PQP)

The PQP must perform independent inspections, testing and verification of the hazardous components work as indicated in the ESR and the approved work plans as described in UFGS 01 57 19.00 20. The PQP shall be appropriately licensed in the state in which the work will be performed.

F2020 1.2 FURNISHINGS

The government shall remove all uncontaminated furnishings and equipment from the work area prior to the start of the work.

F2020 1.3 ASBESTOS

Perform asbestos related work as indicated in the RFP, in accordance with the ESR, and the approved asbestos removal work plan as described in UFGS 01 57 19.00 20.

For asbestos work in DoD schools the Designer of Record shall edit UFGS 02 82 14.00 10, *Asbestos Hazard Control Activities*, as described in UFGS 01 57 19.00 20. The Designer of Record must be an EPA accredited Asbestos Project Designer. Perform asbestos related work in DoD schools in accordance with the approved edited UFGS 02 82 14.00 10.

F2020 1.4 LEAD BASED PAINT

Perform lead based paint related work as indicated in the RFP, in accordance with the ESR and the approved lead based paint removal work plan as described in UFGS 01 57 19.00 20.

All federal, state and local regulations regarding lead based paint within a child occupied facility must be followed. For lead based paint work performed in child occupied facilities the Designer of Record shall edit UFGS 02 83 19.00 10, *Lead Based Paint Hazard Abatement, Target Housing and Child Occupied Facilities*, as described in UFGS 01 57 19.00 20. The Designer of Record must be an EPA accredited Lead Project Designer. Perform lead based paint related work in child occupied facilities in accordance with the approved edited UFGS 02 82 14.00 10.

F2020 1.5 PAINT RELATED WORK

Perform paint related work as indicated in the RFP, in accordance with the ESR and the approved paint removal work plan as described in UFGS 01 57 19.00 20.

F2020 1.6 MERCURY & LLR COMPONENTS

Perform work as indicated in the RFP, in accordance with the ESR and the approved mercury & LLR components removal work plan as described in UFGS 01 57 19.00 20.

F2020 1.7 PCB'S

Perform PCB related work as indicated in the RFP, in accordance with the ESR and the approved PCB removal work plan as described in UFGS 01 57 19.00 20. Notify the contracting officer immediately on discovery of any equipment leaking PCB containing fluid. Take reasonable preventative measures to contain the leak and prevent movement of the PCB containing fluids.

F2020 1.8 ODS

Perform ODS related work as indicated in the RFP, in accordance with the ESR and the approved ODS removal work plan as described in UFGS 01 57 19.00

20.

F2020 1.9 ANIMAL DROPPINGS

Perform animal droppings related work as indicated in the RFP, in accordance with the ESR and the approved animal droppings removal work plan as described in UFGS 01 57 19.00 20.

F2020 1.10 MOLDS AND SPORES

Perform mold and spore related work as indicated in the RFP, in accordance with the ESR and the approved mold and spore work plan.

F2020 1.11 DISPOSAL

All waste materials shall become the property of the Contractor and shall be transported, disposed of and recycled in accordance with the approved disposal plan as described in UFGS 01 57 19.00 20.

F202001 *SUBSTRUCTURE & SUPERSTRUCTURE*

F202002 *EXTERIOR CLOSURE*

F202003 *ROOFING*

F202004 *INTERIOR CONSTRUCTION & FINISHES*

F202005 *CONVEYING SYSTEMS*

F202006 *MECHANICAL SYSTEMS*

F202007 *ELECTRICAL SYSTEMS*

F202008 *EQUIPMENT & FURNISHINGS*

F202009 *OTHER HAZARDOUS SELECTIVE BUILDING DEMOLITION*

Perform all other building components abatement work in accordance with the ESR.

-- End of Section --

SECTION G10

SITE PREPARATION
11/10

G10 GENERAL

RFP Part 3 including the Engineering System Requirements (ESR) provide project specific requirements. The RFP Part 4, Performance Technical Sections (PTS) provide generalized technical requirements that apply to multiple facility types and include more requirements than are applicable to any one project. Therefore, only the RFP Part 4 requirements that apply to the project and further define the RFP Part 3 project specific requirements are required.

G10 1.1 DESIGN GUIDANCE

Provide the design and installation in accordance with the following references. This Performance Technical Specification (PTS) adds clarification to the fundamental requirements contained in the following Government Standards. The general requirements of this PTS section are located in PTS Section Z10, *General Performance Technical Specification*.

G10 1.1.1 Industry Standards and Codes

Refer to UMRL for reference designation identification.

G10 1.1.2 Government Standards

CORPS OF ENGINEERS (COE)

COE EM 385-1-1	Safety and Health Requirements Manual

UNIFIED FACILITIES CRITERIA (UFC)

UFC 1-200-01	General Building Requirements(A reference in this PTS section to UFC 1-200-01 requires compliance with the Tri-Service Core UFCs that are listed in UFGS Section 01 33 10.05 20, which includes the following significant UFC(s):UFC 3-200-10N, Civil EngineeringUFC 3-220-01N, Geotechnical Engineering)
UFC 3-800-10N	Environmental Engineering for Facility Construction

UNIFIED FACILITIES GUIDE SPECIFICATIONS (UFGS)

UFGS 31 23 00.00 20	Excavation and Fill

G10 1.2 PERFORMANCE VERIFICATION AND ACCEPTABLE TESTING

Compliance with the requirements will be determined by a review of the design and construction submittals and by field inspection. See Section 01 33 10.05 20, *Design Submittal Procedures*, and Section 01 33 00.05 20, *Construction Submittal Procedures*, for additional requirements. Verification of satisfactory earthwork performance shall be via testing detailed in the paragraph, "Field Quality Control", in UFGS Specification Section 31 23 00.00 20, *Excavation and Fill*.

G10 1.3 DESIGN SUBMITTALS

Design Submittals shall be in accordance with UFGS section 01 33 10.05 20, *Design Submittal Procedures*, UFC 1-300-09N, *Design Procedures*, UFC 3-200-10N, *Civil Engineering*, and UFC 3-220-01N.

In addition, UFGS sections listed below or in the body of the PTS text are to be used by the Designer of Record (DOR) as a part of the design submittal. If the UFGS products or systems are applicable to the project, the DOR shall edit these referenced UFGS sections and submit them as a part of the design submittal specification. Edit the specification sections in accordance with the limitations stated in PTS section Z10, *General Performance Technical Specifications*.

UFGS 31 23 00.00 20 (02315N), *Excavation and Fill*

G10 1.4 CONSTRUCTION SUBMITTALS

Submit construction submittals in accordance with PTS Section Z10, *General Performance Technical Specifications*. In addition to the Z10 requirements, the Designer of Record (DOR) shall approve the following construction submittals as a minimum:

Submittals in UFGS 01 57 19.05 20 (01577N), Temporary Environmental Controls for Design-Build.

Submittals in UFGS Specification Section 31 23 00.00 20 (02315N), Excavation and Fill.

Demolition plan in accordance with Section 01 74 19, Construction and Demolition Waste Management.

G10 1.5 GEOTECHNICAL REPORT

G10 1.5.1 Subsurface Soils Information

Any provided subsurface soil information is included for the Contractor's information only, and is not guaranteed to fully represent all subsurface conditions. The data included in this RFP are intended for proposal preparation and preliminary design only. The Contractor shall perform, at his expense, such subsurface exploration, investigation, testing, and analysis as his Designer of

Record deems necessary for the design and construction of the site improvements.

G10 1.5.2 Contractor-provided Geotechnical Engineer

The Contractor-provided Geotechnical Engineer is required to be experienced with soil conditions in the region where the project site is located. The Geotechnical Engineer shall evaluate the RFP data, obtain and evaluate all additional data as required to support the design and construction, and prepare a Geotechnical Report.

All work by the Contractor-provided Geotechnical Engineer at the project location, if required, shall be coordinated with the Contracting Officer and shall not interfere with normal base operations. A minimum of two weeks prior to the Foundation Work Design submittal, provide the Contractor's Geotechnical Report (an editable Adobe Acrobat PDF version on CD and two printed copies) for review and record keeping purposes. The report shall become the property of the Government. Provide the geotechnical reports generated during construction, such as pile driving results and analysis, to the Contracting Officer. In addition, provide an editable Adobe Acrobat PDF version and two printed copies for record keeping purposes.

G10 1.5.3 Contractor-Provided Geotechnical Report

Submit a written Geotechnical report based upon Government-provided subsurface investigation data and all additional field and laboratory testing accomplished at the discretion of the Contractor’s Geotechnical Engineer. The Geotechnical Report shall include the following:

a. The project site description, vicinity map and site map indicating the location of borings and any other sampling locations. Provide 24 hour groundwater observations for at least 20% of the borings, minimum one boring. Provide notes explaining any abbreviations or symbols used and describing any special site preparation requirements.
b. Results of all applicable field and laboratory testing, whether Government or Contractor-provided. Address existing subsurface conditions, selection and design of the foundation and floor slab, all underground construction including utility installation and all other site specific requirements (such as soil stabilization and slope stability).
c. Engineering analysis, discussion and recommendations Addressing:

   1) Settlement analysis - Settlement shall be limited as required in EM 1110-1-1904 "Settlement Analysis".

   2) Bearing Capacity analysis

   3) Foundation selection (shallow, deep, special) and construction considerations; dimensions, and installation procedures.

4) Site preparation (earthwork procedures and equipment, compaction requirements, building slab preparation (as applicable), soil sensitivity to weather and equipment, groundwater influence on construction, mitigation of expansive soils or liquefaction potential, and dewatering requirements).

5) Sheeting and shoring considerations, as applicable.

6) Pavement design calculations with parameters defined, actual or assumed, and recommended thicknesses and materials.

7) Haul routes and stockpile locations for earthwork, as applicable.

8) Calculations to support conclusions and recommendations.

9) Recommendations shall be presented on a structure-by-structure basis.

The Geotechnical Report shall be signed by a registered Geotechnical Engineer.

The submitted report shall be accompanied by a cover letter identifying any report recommendations proposed to be adopted into the design which are interpreted by the Contractor as a changed condition to the Geotechnical or Pavement related requirements of the RFP.

G10 1.5.4 Geotechnical Site Data required in Design Drawings

The Contractor's final design drawings shall include the Government-provided subsurface data presented in the RFP, as well as any additional borings and laboratory test result data performed by the Contractor. The data provided shall include:

a. Logs of Borings and related summary of laboratory test results and groundwater observations. Provide 24 hour groundwater observations for at least 20% of the borings, minimum one boring. Provide notes explaining any abbreviations or symbols used and describing any special site preparation requirements.
b. The locations of all borings shall be indicated on the drawings. The applicable design drawings shall be revised to reference the Contractor's Geotechnical Report as being a basis for design.

G1010 SITE CLEARING

G1010 1.1 GENERAL

Clear and grub project site as required for project construction.

G1010 1.2 BURNING

Where burning is permitted, adhere to the applicable federal, state, and local regulations.

G101001 CLEARING

G101001 1.1 CLEARING

The Contractor shall clear all trees, shrubs, brush and vegetation necessary for construction of the project. Clearing includes the felling, trimming, and cutting of trees into sections.

G101001 1.2 PRESERVATION

Preserve and protect trees, shrubs and vegetation not directly impacted by the construction in accordance with Section 01 57 19.00 20, *Temporary Environmental Controls*.

G101002 TREE REMOVAL

Remove and dispose of trees to a depth of at least 18 inches (450 mm) below ground surface. Fill depressions with satisfactory material and compact. Mound fill 2 inches (50 mm) above adjacent surface to allow for settling when not part of a subbase.

G101003 STUMP REMOVAL

Remove stumps to a depth of at least 18 inches (450 mm) below ground surface and grind stumps 18 to 30 inches (450 to 750 mm) below ground surface. Fill depressions with satisfactory material and compact. Mound fill 2 inches (50 mm) above adjacent surface to allow for settling when not part of a subbase.

G101004 GRUBBING

Within the clearing limits, remove and dispose of all logs, shrubs, brush, matted roots, roots larger than 2 inches (50 mm) in diameter, and other debris to a depth of at least 18 inches (450 mm) below ground surface. Fill depressions made by grubbing with satisfactory material and compact to make the new surface conform to the adjacent surface of the ground.

G101005 SELECTIVE THINNING

G101005 1.1 TREE THINNING

Trim trees to remain of dead branches 1-1/2 inches (38 mm) or more in diameter. Neatly cut limbs and branches to be trimmed close to the bole of the tree or main branches.

G101006 DEBRIS DISPOSAL

Prevent spillage on pavements, streets, or adjacent areas. Dispose of all surplus and unsuitable material off of Government property.

G1020 SITE DEMOLITION & RELOCATIONS

G1020 1.1 GENERAL

Demolition work shall include the demolition, removal and legal disposal of existing construction debris as required to accommodate the new construction. The Contractor shall take care to prevent damages to existing

utilities, construction and materials not scheduled for demolition, repair or replacement, and shall repair damages to the construction and materials to the satisfaction of the Contracting Officer and at no additional cost to the Government.

G1020 1.2 AUTHORIZATION

Do not begin demolition until the Demolition Plan has been approved by and authorization is received from the Contracting Officer.

G1020 1.3 TITLE TO MATERIALS

Whenever possible, all features demolished shall be salvaged or recycled in lieu of being disposed of as waste in a landfill. Existing features to be demolished which are not salvageable or reused, shall become the property of the Contractor and shall be removed from project site. The Government will not be responsible for the condition, loss of, or damage to, such property after contract award. Materials and equipment shall not be viewed by prospective purchasers or sold on the site.

G1020 1.4 REUSE OF MATERIALS AND EQUIPMENT

Remove and store materials and equipment to be reused or relocated to prevent damage, and reinstall as the work progresses.

G1020 1.5 SALVAGED MATERIALS AND EQUIPMENT

Salvage materials and equipment that are to be removed by the Contractor and that are to remain the property of the Government, and deliver to a storage site on the station in accordance with instructions of the Contracting Officer.

G102001 BUILDING MASS DEMOLITION

Refer to Section F20 for additional information.

G102002 ABOVEGROUND SITE DEMOLITION

G102002 1.1 DUST AND DEBRIS CONTROL

Prevent the spread of dust and debris to occupied portions of a building or on pavements and avoid the creation of a nuisance or hazard in the surrounding area. Do not use water for dust control if it results in hazardous or objectionable conditions such as, but not limited to, ice, flooding, or pollution. Sweep pavements as often as necessary to control the spread of debris that may result in foreign object damage potential to aircraft.

G102002 1.2 PROTECTION

G102002 1.2.1 Traffic Control

G102002 1.2.2 Foreign Object Damage (FOD)

G102002 1.2.3 Existing Work

G102002 1.2.4 Noise Pollution

G102002 1.3 PAVING AND SLABS

Remove concrete and asphaltic concrete paving and slabs as required for construction of project. Remove the existing aggregate base in areas to receive new pavement to the depth of the proposed pavement section below new finish grade. Remove the existing aggregate base in areas not to receive new pavement to a depth of 8 inches (200 mm) below existing adjacent grade and break remaining pavement (if any) to allow drainage. Provide neat sawcuts at limits of pavement removal; protect sawcuts so that new pavement will butt against the existing without feathering.

G102002 1.4 ABOVEGROUND STORAGE TANKS

Perform aboveground storage tank removal work as indicated in the RFP, in accordance with the ESR and the approved aboveground storage tank removal work plan as described in Section 01 57 19.00 20, *Temporary Environmental Controls*.

G102003 UNDERGROUND SITE DEMOLITION

G102003 1.1 UTILITY TERMINATION

Terminate utilities in accordance with state and local rules and regulations; the nationally recognized code; and the requirements of the utility provider covering the specific utility; UFC 3-200-10N, *Civil Engineering*; and approved by the Contracting Officer.

G102003 1.2 PROTECTION OF EXISTING UTILITIES

Protect existing utilities to remain. Where removal of existing utilities and pavement is required, provide approved barricades, temporary covering of exposed areas, and temporary services or connections. Repair damage to existing utilities to remain at no additional expense to the government.

G102003 1.3 UNDERGROUND STORAGE TANKS

Perform underground storage tank removal work as indicated in the RFP, in accordance with the ESR and the approved underground storage tank removal work plan as described in Section 01 57 19.00 20, *Temporary Environmental Controls*.

G102004 BUILDING RELOCATION

Refer to applicable portions of Section F20 for additional information.

G102005 UTILITY RELOCATION

Repair relocated items that are damaged or replace damaged items with new undamaged items as approved by the Contracting Officer and at no additional expense to the government.

G102006 FENCING RELOCATION

Remove and replace post foundations. Repair relocated items that are damaged or

replace damaged items with new undamaged items as approved by the Contracting Officer and at no additional expense to the government. Refer to Section G204001 for requirements for new fence systems, as applicable.

G102007 SITE CLEANUP

Remove rubbish and debris from the station daily; do not allow accumulations inside or outside the building(s) or on pavements. Store materials that cannot be removed daily in areas specified by the Contracting Officer.

G1030 SITE EARTHWORK

G1030 1.1 GENERAL

This section includes the design and construction requirements for earthwork and grading related to construction of the roadways, parking, paved areas and other related sitework. Refer to Section A10 for earthwork related to construction of structures, including building, footings, foundations, retaining walls, slabs, tanks, and utility appurtenances.

The Designer of Record shall utilize UFGS Specification Section 31 23 00.00 20, *Excavation and Fill*, for the project specification, and shall submit the edited specification section as a part of the design submittal for the project.

G103001 GRADING

G103001 1.1 ELEVATIONS

Establish finish floor elevations as required by UFC 3-200-10N, *Civil Engineering*.

G103001 1.2 SITE GRADING

The Contractor shall preserve natural topographic features to minimize the impact on the existing drainage patterns at and adjacent to the site. Provide site grading in accordance with the requirements of the UFC 3-200-10N, *Civil Engineering*.

G103001 1.3 FINISHED SURFACES

Finish grading shall provide drainage towards new and existing drainage features. Finish grading shall not result in low spots that hold water or that direct runoff towards new or existing facilities or site amenities. Finish grading shall be in accordance with the requirements of the UFC 3-200-10N, *Civil Engineering*.

G103002 COMMON EXCAVATION

The Contractor shall preserve natural topographic features to minimize cut and fill requirements. All unsuitable material and surplus excavation shall become the property of the Contractor and shall be disposed of as indicated in the Project Program.

G103003 ROCK EXCAVATION

If blasting is allowed, it shall be conducted in accordance with EM 385-1-1 and Federal, state, and local safety regulations. Blasting mats shall be provided, and non-electric blasting caps shall be used. Notify the Contracting Officer 24 hours prior to blasting.

Requests for additional compensation shall not be made by the Contractor for degree of hardness or difficulty encountered in removal of material. All unsuitable material and surplus excavation shall become the property of the Contractor and shall be disposed of as indicated in Project Program.

G103004 FILL & BORROW

G103004 1.1 SOURCES

Where sufficient topsoil and satisfactory materials are not available on the project site, provide suitable borrow materials.

G103004 1.2 UNSATISFACTORY SOIL MATERIALS

Remove unsatisfactory soil materials from the site in accordance with the Project Program and replace with satisfactory soil materials in accordance with UFGS Specification Section 31 23 00.00 20, *Excavation and Fill*.

G103004 1.3 TOPSOIL

Refer to Section G2050, "Landscaping". Remove unsatisfactory, existing topsoil from the site in accordance with the Project Program.

G103005 COMPACTION

Provide compaction in accordance with UFGS Specification Section 31 23 00.00 20, *Excavation and Fill*, and the recommendations of the Contractor's Geotechnical Engineer, whichever is greater.

G103006 SOIL STABILIZATION

Provide soil stabilization designed to function as required by site conditions in accordance with the State Highway specifications and standards in the state where the project is located. Apply and install geosynthetics in accordance with the manufacturer's written instructions.

G103007 SLOPE STABILIZATION

Provide slope stabilization methods in accordance with the State Highway specifications and standards in the state where the project is located. Design and install manufactured products, gabions, geogrids, rock anchors in accordance with the manufacturer's written instructions.

G103008 SOIL TREATMENT

G103008 1.1 TERMITE CONTROL

Refer to Section A1010 1.2, "Termite Control".

G103008 1.2 RODENT AND VEGETATION CONTROL

Prevent and eliminate standing water.

G103009 SHORING

Provide sheeting, shoring, bracing, cribbing and underpinning in accordance with the Army Corps of Engineer's Safety and Health Requirements Manual (COE EM 385-1-1), UFC 3-220-01N, *Geotechnical Engineering*, UFC 3-301-01N, *Structural Engineering*, and all other applicable Federal, State and local codes and requirements

Provide protection of existing structures.

G103010 TEMPORARY DEWATERING

The design of the temporary dewatering system shall account for soil conditions, rainfall, fluctuations in the groundwater elevations and the potential settlement impact on adjacent facilities due to dewatering. Provide dewatering in accordance with UFGS Specification Section 31 23 00.00 20. While the excavation is open, the water level shall be maintained continuously, at least 1.0 foot (0.30 m) below the working level.

French drains, sumps, ditches or trenches will not be permitted within 3 feet (0.9 m) of the foundation of any structure without written approval of the NAVFAC Civil/Geotechnical Reviewer.

G103011 TEMPORARY EROSION & SEDIMENT CONTROL

G103011 1.1 TEMPORARY EROSION & SEDIMENT CONTROL

Develop and implement temporary erosion and sediment control measures and other Best Management Practices (BMPs) prior to or in conjunction with commencement of earthwork in accordance with the state Erosion and Sediment Control Laws and Regulations. Remove all non-permanent erosion control measures after vegetation is fully established.

G103011 1.2 MAINTENANCE

Maintain temporary erosion control measures in accordance with state Erosion and Sediment Control Laws and Regulations throughout the project until areas are fully stabilized.

G103090 OTHER SITE EARTHWORK

G103090 1.1 HISTORIC AND ARCHAEOLOGIC ARTIFACTS

Refer to Section 01 50 00.05 20, *Temporary Facilities and Controls for Design-Build*, in Part 2 of this RFP.

G103090 1.2 PIPELINE CASING UNDER RAILROADS OR PAVEMENTS

Where required by code or local practice provide casing for piping under railroads or pavements. The Contractor is responsible for obtaining permits from all government and nongovernment owners/agencies in designing and providing the work.

G103090 1.3 TOPSOIL AND SEED

Provide topsoil and seed according to UFGS Specification Section 31 23 00.00 20, *Excavation and Fill*, except when landscaping is required.

G1040 HAZARDOUS WASTE REMEDIATION

G1040 1.1 EXCAVATION

Perform excavation of contaminated soil and groundwater as indicated in the RFP, in accordance with the ESR and the approved contaminated soil and groundwater removal work plan as described in Section 01 57 19.00 20, *Temporary Environmental Controls*. Areas of contamination shall be excavated to the depth noted elsewhere in the RFP. Select methods and equipment to minimize disturbance to areas beyond the limits of the excavation area. Material that becomes contaminated as a result of the Contractor's operations shall be removed and disposed of at no additional cost to the Government. Where excavation extends into groundwater levels, dewatering methods shall be employed on a localized basis to facilitate excavation operations. Water generated by dewatering during excavation shall be collected and tested in accordance with the ESR and the approved work plan.

Water that contains contaminants above the levels indicated in the ESR shall be disposed of in accordance with the ESR and the approved work plan.

Non-contaminated water may be disposed of on-site.

G1040 1.2 STOCKPILED SOILS

Soils determined to be contaminated in accordance with the criteria in the ESR must be stockpiled in accordance with the contaminated soil and groundwater removal work plan as described in Section 01 57 19.00 20, *Temporary Environmental Controls*, and shall be disposed of in accordance with the requirements of the ESR.

Soils that are determined to contain contaminants below the criteria listed in the ESR may be used as clean fill.

G1040 1.3 CLEAN FILL

Soils that are determined as clean fill via testing shall be backfilled and compacted in accordance with the requirements listed in the ESR.

G1040 1.4 SPILLS

In the event of a spill or release of hazardous substances, pollutant, contaminant or oil, notify the Contracting Officer immediately. Containment actions shall be taken immediately to minimize the effect of any spill or leak. Clean up shall be performed at the Contractor's expense in accordance with the ESR and the approved spill work plan as described in Section 01 57 19.00 20, *Temporary Environmental Controls*.

G1040 1.5 DISPOSAL

All waste materials shall become the property of the Contractor and shall be transported, disposed of in accordance with the criteria listed in the ESR and the approved disposal plan as described in Section 01 57 19.00 20,

Temporary Environmental Controls.

-- End of Section --

SECTION G20

SITE IMPROVEMENTS
11/10

G20 GENERAL

RFP Part 3 including the Engineering System Requirements (ESR) provide project specific requirements. The RFP Part 4, Performance Technical Sections (PTS) provide generalized technical requirements that apply to multiple facility types and include more requirements than are applicable to any one project. Therefore, only the RFP Part 4 requirements that apply to the project and further define the RFP Part 3 project specific requirements are required.

G20 1.1 DESIGN GUIDANCE

Provide the design and installation in accordance with the following references. This Performance Technical Specification (PTS) adds clarification to the fundamental requirements contained in the following Government Standards. The general requirements of this PTS section are located in PTS Section Z10, *General Performance Technical Specification*.

G20 1.1.1 Industry Standards and Codes

AMERICAN SOD PRODUCERS ASSOCIATION (ASPA)

NATIONAL FEDERATION OF STATE HIGH SCHOOL ASSOCIATIONS (NF)

U.S CONSUMER PRODUCT SAFETY COMMISSION, PUBLICATION NO. 325

G20 1.1.2 Government Standards

U.S. GENERAL SERVICES ADMINISTRATION (GSA)

FS RR-F-191	Fencing and Wire and Post Metal (and Gates, Chain-link Fence Fabric, and Accessories)

CORPS OF ENGINEERS (COE)

TM 5-822-5	Pavement Design for Roads, Streets, Walks, and Open Storage Areas

NAVAL FACILITIES ENGINEERING COMMAND (NAVFACENGCOM)

Military Handbook, MIL-HDBK-1013/14	Selection and Application of Vehicle Barriers

UNIFIED FACILITIES CRITERIA (UFC)

UFC 1-200-01	General Building Requirements(A reference in this PTS section to UFC 1-200-01 requires compliance with the Tri-Service Core UFCs that are listed in UFGS Section 01 33 10.05 20, which includes the following significant UFC(s):UFC 3-200-10N, Civil EngineeringUFC 3-201-02, Landscape ArchitectureUFC 3-220-01N, Geotechnical Engineering))
UFC 3-210-04	Children's Outdoor Play Areas
UFC 3-270-01	O&M: Asphalt Maintenance and Repair
UFC 3-270-02	O&M: Asphalt Crack Repair
UFC 3-270-03	O&M: Concrete Crack and Partial Depth Spall Repair
UFC 3-270-04	O&M: Concrete Crack Repair
UFC 3-800-10N	Environmental Engineering for Facility Construction

UNIFIED FACILITIES GUIDE SPECIFICATIONS (UFGS)

UFGS 32 11 16.13	Sand-Clay [Base] [Subbase] Course
UFGS 32 11 16.16	[Base Course for Rigid] [and Subbase Course for Flexible] Paving
UFGS 32 11 24	Graded Crushed Aggregate Base Course for Flexible Pavement
UFGS 32 11 26.16	Bituminous Concrete Base Course
UFGS 32 11 30	Lime Treated Subgrade [Lime Modified Soils]
UFGS 32 11 33	Cement Stabilized [Base] [Subbase] Course at Airfields and Roads
UFGS 32 11 36.13	Lean Concrete Base Course
UFGS 32 12 17	Hot Mix Bituminous Pavement
UFGS 32 13 13.03	Airfields and Heavy-Duty Concrete Pavement Less Than 10,000 Cubic Yards
UFGS 32 13 13.16	Portland Cement Concrete Pavement for Roads and Site Facilities

G20 1.2 QUALITY ASSURANCE

G20 1.2.1 Qualifications of Tree Location Contractor

Contractor shall be a professional tree moving company holding landscape contractor's license in the state where the work is to be performed and have a minimum ten years of tree relocation experience.

G20 1.2.2 Qualifications of New Landscape Contractor

Construction company shall hold a landscape contractor's license in the state where the work is to be performed and have a minimum five years of landscape construction experience.

G20 1.3 PERFORMANCE VERIFICATION AND ACCEPTANCE TESTING

Compliance with the requirements will be determined by a review of the design and construction submittals and by field inspection. See Section 01 33 10.05 20, *Design Submittal Procedures*, and Section 01 33 00.05 20, *Construction Submittal Procedures*, for additional requirements.

Verification of satisfactory performance shall be via Performance Verification, as detailed in this section of the RFP. Verification of satisfactory performance shall also be via testing as detailed in the paragraph, Field Quality Control, in applicable UFGS Specification Sections utilized.

G20 1.3.1 Subgrade Preparation Performance Verification

Perform subgrade preparation in accordance with PTS Section G10. If required by the Designer of Record, perform proof rolling. Proof rolling shall be performed in the presence of the Contracting Officer. Rutting or pumping of material shall be undercut as directed by the Contracting Officer and replaced with satisfactory soil materials as defined in Section G10, *Site Preparation*.

G20 1.3.2 Base Course Performance Verification

G20 1.3.2.1 Aggregate Base Course

a. Sampling: ASTM D 75.
b. Gradation: ASTM C 136.
c. Thickness: Confirm in-place compacted thickness. Acceptable tolerances are plus or minus 0.5 inches (13 mm). One test for every 500 square yards (418 square meters); minimum 2 tests.
d. Density: ASTM D 1556 or ASTM D 2922 and ASTM D 3017. One field test for every 1000 square yards (836 square meters); minimum 2 tests. ASTM D 1557, Method D; one laboratory test for the project.
e. Visual: Surface shall be smooth with no ruts.

G20 1.3.2.2 Other Types of Base Courses

For other types of base courses, provide field testing in accordance with the SHS.

G20 1.3.3 Bituminous Concrete Pavement Performance Verification

a. Visual: Finished surface shall be uniform in texture and appearance and free of cracks and creases.
b. Sampling: ASTM D 979.
c. Job Mix: Determine gradation and bitumen content. One sample for every 400 tons (362,500 kilograms); minimum 1 test.
d. Thickness: ASTM D 3549. Confirm in-place compacted thickness. Acceptable tolerances are plus or minus 0.5 inches (13 mm) for bituminous base course and plus or minus 0.25 inches (6 mm) for bituminous surface course. One test for every 500 square yards (418 square meters); minimum 2 tests.
e. Surface Smoothness: Test surface smoothness by using a 10 foot (3 meter) straightedge in transverse and longitudinal directions to pavement. Acceptable tolerances are plus or minus 0.25 inches (6 mm) for bituminous base and surface courses.
f. Density: Conduct field density of in-place compacted pavement in accordance with ASTM D 2950 and correlated with ASTM D 1188 or ASTM D 2726. One field test for every 1000 square yards (836 square meters); minimum 2 tests. One laboratory test for the project.

G20 1.3.4 Portland Cement Concrete Pavement Performance Verification

a. Visual: Finished surface shall be uniform in texture and appearance and free of cracks.
b. Sampling: ASTM C 31M (ASTM C 31).
c. Thickness: Acceptable tolerances are plus or minus 0.5 inches (13 mm). One test for every 500 square feet (418 square meters); minimum 2 tests.
d. Surface Smoothness: Test surface smoothness by using a 10 foot (3 meter) straightedge in transverse and longitudinal directions to pavement. The finished surfaces of the pavements shall have no abrupt change of 0.12 inch (3 mm) or more.
e. Strength: Samples for strength tests of each mix design of concrete placed each day shall be taken not less than once a day, nor less than once for each 100 cubic yards (120 cubic meters) of concrete, nor less than once for each 5000 square feet (500 square meters).

1) Compressive Strength: ASTM C 39. Make five test cylinders for each set of tests. Test two cylinders at 7 days, two cylinders at 28 days, and hold one cylinder in reserve. Each strength test result shall be the average of two cylinders from the same concrete sample tested at 28 days. If the average of any three consecutive strength test results is less than f'c or if any strength test result falls below f'c by more than 500 psi, take a minimum of three ASTM C 42/C 42M core samples from the in-place work represented by the low test cylinder results and test. Concrete represented by core test shall be considered structurally adequate if the average of three cores

is equal to at least 85 percent of f'c and if no single core is less than 75 percent of f'c. Locations represented by erratic core strengths shall be retested.

2) Flexural Strength: ASTM C 78. Make four test specimens for each set of tests. Test two specimens at 28 days, and the other two at 90 days. Concrete strength will be considered satisfactory when the minimum of the 90-day test results equals or exceeds the specified 90-day flexural strength, and no individual strength test is less than the design strength. If the ratio of the 28-day strength test to the specified 90-day strength is less than 65 percent, make necessary adjustments for conformance.

f. Remove concrete not meeting strength criteria and provide new acceptable concrete at no expense to the government. Repair core holes with nonshrink grout. Match color and finish of adjacent concrete.

G20 1.3.5 Concrete Joint Performance Verification

Install a test section of 500 linear feet (150 m) at start of sealing operation for each type sealant to be used. Obtain approval of test section by Contracting Officer prior to installing additional joint seal. Joint sealer that fails to cure properly, or fails to bond to joint walls, or reverts to uncured state or fails in cohesion, or shows excessive air voids, blisters, or has surface defects, swells, or other deficiencies, or is not recessed within indicated tolerances shall be rejected. Remove rejected sealer and reclean and reseal joints.

G20 1.3.6 Topsoil Performance Verification

Prior to planting design, provide a commercial soil analysis. Amend planting areas based on the soil test's interpretation, amendment type, and quantity recommendations (including soil nutrients and texture, with percentages shown). Additional topsoil shall be used only in areas where soil analysis shows that the existing soil is inadequate for growth of plant materials.

G20 1.3.7 Final Inspection for Planting and Irrigation

Final inspection shall be made upon written request from the Contractor at least 10 days prior to the last day of the planting and irrigation Establishment Period. The Landscape Contractor shall attend the inspection with the Contracting Officer and document the inspection. The Landscape Architect-of-Record shall also attend the inspection and provide the Contracting Officer with a letter certifying that the planting and irrigation is installed per the plans and irrigation coverage is correct and appropriate for optimum plant survival. At the end of the Establishment Period, remove all stakes and guy cables.

G20 1.3.8 Landscape and Irrigation Establishment Period and Guarantee

All transplanted trees, newly planted trees, shrubs, ground covers, turf, and irrigation systems shall be guaranteed for a period of one

year after the Contracting Officer's final acceptance. This acceptance, and the submittal of irrigation as-builts and controller charts, shall begin the Establishment Period. All trees, shrubs, and ground covers that die or have 20 percent or more of their crowns that die during planting operations or the guarantee period shall be replaced with healthy plants of the same species or variety during the appropriate planting season. The Landscape Architect-of-Record shall, along with the Contracting Officer, attend, approve and document the start of the Establishment Period and document quarterly and final inspections. During this period, the Contractor shall perform tasks which shall include, but not be limited to: watering, mowing, overseeding, fertilizing, mulching, pruning, weeding, eradicating pests (rodents, rabbits, insects, mammals and fungus), restaking, adjusting guy wires, adjusting irrigation systems, and replenishing mulch to assure all plant material is in a healthy and thriving condition or the Contractor shall replace plant material at his own expense. Broadcast seeded or hydro-seeded areas that do not achieve the 95-percent coverage by the end of the Establishment Period shall be reseeded by the same method and be maintained an additional 120 days to ensure coverage requirements are met. Turf shall be maintained in a manner that promotes proper health, growth, rich natural green color, and a neat, uniform, manicured appearance, free of bare areas, ruts, holes, weeds, pests, dead vegetation, debris, and unwanted vegetation that present an unsightly appearance. Mow weekly during the growing season and remove excess clippings.

G20 1.4 DESIGN SUBMITTALS

Design Submittals shall be in accordance with UFC 1-200-01, General Building Requirements, UFGS section 01 33 10.05 20, *Design Submittal Procedures*, UFC 1-300-09N, *Design Procedures*, and UFC 3-200-10N, *Civil Engineer*ing.

In addition, UFGS sections listed below or in the body of the PTS text are to be used by the Designer of Record (DOR) as a part of the design submittal. If the UFGS products or systems are applicable to the project, the DOR shall edit these referenced UFGS sections and submit them as a part of the design submittal specification. Edit the specification sections in accordance with the limitations stated in PTS section Z10, *General Performance Technical Specifications*.

32 11 26.16, *Bituminous Concrete Base Course*

32 11 36.13, *Lean Concrete Base Course*

32 11 33, *Cement Stabilized [Base] [Subbase] Course at Airfields and Roads*

32 11 30, *Lime Treated Subgrade [Lime Modified Soils]*

32 11 16.16, *[Base Course for Rigid] [and Subbase Course for Flexible] Paving*

32 11 24, *Graded Crushed Aggregate Base Course for Flexible Pavement*

32 11 16.13, *Sand-Clay [Base] [Subbase] Course*

32 12 17, *Hot Mix Bituminous Pavement*

32 13 13.16, *Portland Cement Concrete Pavement for Roads and Site Facilities*

G20 1.5 CONSTRUCTION SUBMITTALS

Provide product data for all exterior furnishings.

Submit construction submittals in accordance with PTS Section Z10, *General Performance Technical Specifications*. In addition to the Z10 requirements, the Designer of Record (DOR) shall approve the following construction submittals as a minimum:

Provide product data for all exterior furnishings, field test reports. transporting plan, and irrigation plan.

G20 1.5.1 Transplanting Plan

A transplanting plan shall be submitted for all projects which include transplanting trees. The plan shall be submitted showing existing and proposed locations of transplanted trees. The plan shall delineate methods and times for root pruning, digging, balling, removing, storing, transporting, planting, watering, and maintenance to ensure survivability. The plan shall also include equipment, anti-desiccant, and pesticides to be used. A listing of the plant material to be transplanted shall be provided by common name and botanical name as listed under "Nomenclature" in ANSI Z60.1; classification; caliper; and height.

G20 1.5.2 As-Builts

Submit a complete set of irrigation as-builts to the Contracting Officer, to include the recording of measurements onto a record set of full-size project irrigation plans. Measurements shall locate water meters, pressure supply lines at 100 foot (30 m) intervals, backflow prevention devices, rain/freeze sensors, valves (including quick couplers and hose bibbs), controllers (and control wire, if routed separately from pressure supply line); all dimensioned from two permanent points of reference, such as building corners, sidewalks, and other permanent features.

G20 1.6 ANTITERRORISM (AT) STANDARDS

INCORPORATE THE MINIMUM AT STANDARDS INDICATED IN UFC 4-010-01, *DOD MINIMUM ANTITERRORISM STANDARD FOR BUILDINGS*.

G20 1.7 PROJECT LIMITATIONS

Prior to the start of design, the Contractor shall determine the exact limit-of-work line for the project periphery, considering items such as, but not limited to, utility work, landscape revegetation of disturbed areas, and laydown areas. The Designer of Record shall determine limit-of-work lines.

G2010 ROADWAYS

G2010 1.1 PAVEMENT DESIGN

Provide geometric and pavement design, including minimum pavement sections, in accordance with UFC 3-200-10N, *Civil Engineering*, and the State Department of Transportation. Provide pavement calculations in accordance with UFC 1-300-09N, *Design Procedures*. Provide any required additional pavement design to provide a complete and useable facility.

For pavements subject to aircraft traffic or aircraft ground support equipment traffic consult Government Civil Reviewer for design criteria and requirements. State Department of Transportation standards are not acceptable for airfield pavements.

G2010 1.2 PAVEMENT AESTHETICS

Provide surfaces consistent in color and finish.

G2010 1.3 LANDSCAPING

Designs for streets and roads shall include adequate space for trees and other landscape material.

G2010 1.4 TRAFFIC CONTROL DEVICES

New traffic control devices (i.e., signsand markings) shall be provided and installed in accordance with the United States Department of Transportation Federal Highway Administration's *Manual on Uniform Traffic Control Devices*and their standard, "Rigid Sign Supports". New traffic control devices shall also be provided along/in the existing streets adjacent to the project site as necessary to provide complete traffic control to the new facilities.

G2010 1.5 EXISTING UTILITY STRUCTURES

Existing utility structures shall be adjusted to meet the new finished pavement grades as required.

G201001 BASES & SUBBASES

Prepare subgrade in accordance with Section G10, *Site Preparation*. Geotextiles may be used for separation or reinforcement in accordance with manufacturer's instructions. Provide base course under paved areas in accordance with the State Highway specifications (SHS) in the state where the project is located.

Place base course in accordance with the SHS for that particular base course and in layers of equal thickness with no compacted layer more than 6 inches (150 mm) thick. Compact base course at optimum moisture content to 100 percent ASTM D 1557 maximum dry density.

Where SHS are not available or applicable, the Designer of Record shall utilize the applicable UFGS Specification Sections referenced under paragraph 1.1.2 entitled "Government Standards" for the project specification. Submit these specifications in edited form as a part of the design submittal for the project.

G201002 CURBS & GUTTERS

Provide concrete curbs and gutters in accordance with the SHS and standards or as specified in UFC 3-200-10N, Civil Engineering, whichever is more stringent. Where the SHS do not include concrete materials for curbs and gutters, provide concrete in accordance with the applicable standard mix of the SHS for a minimum compressive strength at 28 days of 3500 psi (25 MPa) concrete.

G201003 PAVED SURFACES

Where SHS are not available or applicable, the Designer of Record shall utilize the applicable UFGS Specification Sections referenced under paragraph 1.1.2 entitled "Government Standards" for the project specification. Submit these specifications in edited form as a part of the design submittal for the project.

G201003 1.1 PAVEMENT MIX

G201003 1.1.1 Bituminous Concrete Pavement

Provide bituminous concrete pavement in accordance with the applicable standard mix of the SHS based on the pavement design and vehicle loading indicated in this RFP.

G201003 1.1.1.1 Bituminous Concrete Placement

Bituminous concrete placement, including minimum temperature during placement, joints, and maximum lift thickness shall be in accordance with the SHS. Compact bituminous concrete in accordance with the SHS, modified to 96 percent of maximum laboratory density.

G201003 1.1.2 Portland Cement Concrete Pavement

If reinforced, the welded wire fabric shall conform to ASTM A 185. Bar reinforcement shall conform to ASTM A 615/A 615M, Grade 400 (Grade 60).

Provide concrete in accordance with the applicable standard mix of the SHS for the design strength plus any allowable deviations.

G201003 1.2 JOINTS FOR PORTLAND CEMENT CONCRETE PAVEMENT

Joints shall be in accordance with SHS and the applicable portions of TM 5-822-5, *Pavement Design for Roads, Streets, Walks, and Open Storage Areas*. Joints shall be installed in a manner and at such time to prevent random or uncontrolled cracking. Joints shall form a regular rectangular pattern. Wherever curved pavement edges occur, make joints to intersect tangents to curve at right angles.

G201003 1.2.1 Expansion Joints

Provide thickened edge expansion joints at the intersection of two rigid pavements. Use preformed joint filler, ASTM D 1751. Filler must be compatible with joint sealer material. Preformed joint filler shall be securely held in position during concreting operations.

G201003 1.2.2 Isolation Joints

Provide thickened edge isolation joints by placing a 1/2-inch (12 mm) preformed joint filler (ASTM D 1751) around each structure that extends into or through the pavement before concrete is placed at that location.

G201003 1.2.3 Contraction Joints

Joint lines shall be sawed within specified tolerance, straight, and extend for width of transverse joint, and for entire length of longitudinal joint.

G201003 1.2.4 Construction Joints

If an emergency stop occurs remove the concrete back to location of transverse joint and install a construction joint.

G201003 1.2.5 Joint Sealants

ASTM D 5893; Provide single component cold-applied silicone. Silicone sealant shall be self-leveling and non-acid curing.

G201003 1.2.6 Preformed Compression Seals

Use performed compression seals in areas where silicone joint sealant does not perform, such as areas subject to water inundation, blasts, or constant/repeated fuel spillage.

ASTM D 2628. ASTM D 2835, for lubricant.

G201003 1.3 PRIME COAT

Use prime coat in accordance with the SHS. Prime coat shall be emulsified asphalt materials.

G201003 1.4 TACK COAT

Tack coat is required for bituminous pavement overlays and on vertical cut faces of pavement patches. Tack coat shall be in accordance with the SHS.

G201003 1.5 PAVEMENT PATCHES

Provide pavement patches for existing pavements where required for installation of utility trenches. Sawcut 12 inches beyond edge of trench. Thicknesses of pavement materials shall be equal to or greater than the existing pavement section.

For spalls or repairs of existing concrete pavement, perform repairs in conformance with UFC 3-270-03, *O&M: Concrete Crack and Partial Depth Spall Repair*, and UFC 3-270-04, *O&M: Concrete Repair*. Spall repair materials shall be either Rapid Setting Cementitious Concrete (RSCC), epoxy concrete, or polymer-modified Portland Cement (non-sag mortar) products specially formulated for spall repairs, with a proven record (in service at least three years) of satisfactory use under loading and environmental conditions similar to those at the location of intended use. A manufacturer's data

sheet and certificate supporting the satisfactory use shall be provided to the Contracting Officer with the design. A product manufacturer's representative shall be present during the initial two days of product application to verify that manufacturer's instructions for use are adhered to. The Contracting Officer shall be given 7 days notice prior to the initial application in order to be present.

G201004 MARKING & SIGNAGE

G201004 1.1 MARKING

Pavement markings shall be in accordance with the SHS. Materials shall be designed for life expectancy of at least 3 years under an average daily traffic count per lane of approximately 9000 vehicles. Water based paints shall have durability rating of at least 4 when determined in the wheel path area.

Provide a half-rate initial marking application on bituminous pavements. Provide the remaining application at the end of the normal curing period.

G201004 1.2 SIGNAGE

Provide signage in accordance with the MUTCD.

G201005 GUARDRAILS & BARRIERS

G201005 1.1 GUARDRAILS

Provide guard (guide) rails in accordance with the SHS. Where the SHS do not include materials for guardrails, provide guardrails in accordance with the applicable portions of the *AASHTO Roadside Design Guide*.

G201005 1.2 BOLLARDS

Bollards shall be 4" diameter minimum steel pipe filled with concrete and embedded in a portland cement concrete foundation. Bollards associated with passive barrier systems are specified in Section G204004, "Security Structures".

G201006 RESURFACING

Adjust rims of existing utility structures to match proposed grades after resurfacing.

G201006 1.1 SLURRY SEAL

ASTM D 3910 and in accordance with the SHS.

G201006 1.2 BITUMINOUS CONCRETE OVERLAY

Remove old pavement by cold milling to depths required to provide new surface and leave underlying materials intact. Clean the pavement of excessive dirt, clay or other foreign matter with power brooms and hand brooms immediately prior to the milling operation.

Repair or replace damaged utility structures, valve boxes, or pavement that

is torn, cracked, gouged, rutted, broken or undercut at no addition expense to the government.

Provide bituminous concrete overlay produced from hot or cold recycling of the milled material or from virgin materials in accordance with the applicable provisions of UFC 3-200-10N, *Civil Engineering*, and the standard mix of the SHS based on the pavement design and vehicle loading as indicated in this RFP.

G201006 1.3 CRACK SEALING

Fiber reinforced crack sealer shall be used for sealing cracks in asphalt pavement after milling and prior to resurfacing. Crack sealing shall conform to the following requirements in UFC 3-270-01, *O&M: Asphalt Maintenance and Repair*, and UFC 3-270-02, *O&M: Asphalt Crack Repair*.

G2020 PARKING LOTS

G202001 BASES & SUBBASES

Refer to Section G201001.

G202002 CURBS & GUTTERS

Refer to Section G201002.

G202003 PAVED SURFACES

Refer to Section G201003.

G202004 MARKING & SIGNAGE

Refer to Section G201004. Provide water-based paints only.

Mark neatly to denote traffic lanes and parking spaces; mark in accordance with the requirements of UFC 3-200-10N, *Civil Engineering*.

G202005 GUARDRAILS & BARRIERS

Refer to Section G201005.

G202005 1.1 WHEELSTOPS

Provide precast concrete wheelstops.

G202006 RESURFACING

Refer to Section G201006.

G2030 PEDESTRIAN PAVING

Locate new sidewalks such that they maintain continuity of pedestrian traffic to and from the existing sidewalks adjacent to the site(s).

G203001 BASES & SUBBASES

Provide as required by local standards or geotechnical report; refer to Section G201001.

G203003 PAVED SURFACES

G203003 1.1 SIDEWALKS

Sidewalks shall be portland cement concrete pavement, 4 inches (100 mm) thick minimum. Provide concrete in accordance with the applicable standard mix of the SHS for a minimum compressive strength at 28 days of 3500 psi (25 MPa) concrete. Sidewalks shall be at least 5 feet (1.5 meters) wide, except that sidewalks connecting entry points of housing units to the housing unit's parking shall be at least 36 inches (900 mm) wide. Use the maximum percentage of fly ash allowed in the applicable standard mix of the SHS. In housing areas, offset sidewalks paralleling streets to maintain a minimum grassed separation of 5 feet (1.5 meters) from the back face of the curb to the closest edge of the sidewalk.

Provide a broomed finish. Unless indicated otherwise, provide a transverse slope of 1/48. Limit variation in cross section to 0.25 inch in 5 feet (6 mm in 1.50 m).

G203003 1.1.1 Joints

Provide contraction joints spaced at intervals equivalent to the width of the sidewalk. Provide 0.5 inch (13 mm) thick transverse expansion joints at changes in direction where sidewalk abuts curb, steps, rigid pavement, or other similar structures; space expansion joints every 50 feet (15 m) maximum. Provide isolation joints by placing a 1/2-inch (12 mm) preformed expansion joint filler around each structure that extends into or through the sidewalk before concrete is placed at that location.

G203003 1.2 CONCRETE PAVERS

G203003 1.3 HANDICAPPED RAMPS

Provide handicapped ramps of portland cement concrete pavement with a minimum compressive strength at 28 days of 3500 psi (25 MPa) and an exposed aggregate finish, truncated domes, or as required by the SHS at roadway intersections.

G203004 GUARDRAILS & BARRIERS

Refer to Section G201005.

G2040 SITE DEVELOPMENT

G204001 FENCING & GATES

G204001 1.1 CHAIN LINK FENCE

Aluminum fabric, posts or accessories shall not be used.

Chain link fence fabric shall be at least 9 gauge (3 mm) steel wire mesh material (before any coating) with mesh openings not larger than 2 inches

(51 mm). Install fence in accordance with ASTM F 567 and the manufacturer's written installation instructions.

G204001 1.1.1 Tensions Wires and Top Rails

Provide rails in accordance with FS RR-F-191/3, Class 1, steel pipe, Grade A.

G204001 1.1.2 Gates

Provide gates in accordance with FS RR-F-191/2 with posts and fabric as specified for fence.

G204001 1.1.3 Posts and Braces

Provide posts and braces in accordance with FS RR-F-191/3, Class 1, steel pipe, Grade A. Each gate, terminal and end post will be braced with truss rods.

G204001 1.1.4 Fencing Accessories

Provide fencing accessories in accordance with FS RR-F-191/4. If PVC coating is required, provide accessories with PVC color coating similar to that specified for chain-link fabric or framework.

G204001 1.2 ORNAMENTAL FENCE

G204001 1.3 SECURITY FENCE

Provide security fencing systems in accordance with UFC 3-200-10N, *Civil Engineering*, and this RFP.

G204001 1.3.1 Chain Link Security Fence

Provide chain link fence in accordance with paragraph G204001 – 1.1, excepted as noted otherwise. Ensure that the fabric has twisted and barbed selvage at the top and bottom. Do not provide top rails. All posts and structural supports shall be located on the inner side of the fencing. Outriggers shall be installed facing outward except when the fence must be mounted directly on the property line.

G204001 1.3.2 Signage

Provide signage at a minimum of 200 foot (61 m) intervals along the entire perimeter.

G204001 1.3.3 Drainage Culverts and Utility Openings

Provide protective measures to prevent access through culverts, storm drains, sewers, air intakes, exhaust tunnels and utility openings or across drainage ditches or swales.

G204001 1.4 OPENINGS IN PERIMETER AND SECURITY FENCING

Openings in perimeter fencing and security fencing shall not be covered, blocked or laced with material which would prevent a clear view of personnel,

vehicles or material in the outer or inner vicinity of the fenceline.

G204001 1.5 FENCE GROUNDING

Ground fencing on either side of every gate and at other locations when the fencing is near and parallel to high tension power lines. Grounding shall also be at intervals of 1000 feet (305 meters) to 1500 feet (457 meters) when the fencing runs through isolated areas and at lesser distances depending on the proximity of the fencing to public roads, highways and buildings where the fencing is around or within any explosive storage, production, operating or handling areas.

G204001 1.6 ENCLOSURES FOR UTILITY EQUIPMENT

Where fencing is used to provide an enclosure for utility equipment, ensure a minimum clearance is provided no less than 3 feet (900 mm) around the equipment to permit maintenance access and ventilation. Provide stone, gravel or concrete paving within the enclosure.

G204002 RETAINING WALLS AND FREESTANDING WALLS

Provide retaining walls to permanently resist soil pressures as well as live loads. Provide wall drainage to minimize lateral loading and protect wall materials against degradation.

G204003 EXTERIOR FURNISHINGS

Refer to ESR G20 and other portions of the RFP for exterior furnishings required on this project. All site furnishings shall be permanently attached to concrete pads. Site furnishings shall conform to the Base Exterior Architecture Plan (BEAP) and or Installation Appearance Plan for each Activity. If no product guidance is given, coordinate material, finish and color with architecture (fiberglass and aluminum are not acceptable) and provide to the greatest extent possible, materials with industrial recycled content, preferably from regionally local manufacturers.

G204003 1.1 PICNIC AND PASSIVE RECREATION AREAS

Picnic areas shall include tables, with attached benches, on concrete bases sloped to drain and permanent barbecue grill(s). Additionally, separate receptacles shall be provided for trash, recycling and barbecue ashes. All site furnishings shall be permanently attached to concrete paving which shall extend a minimum of 12 inches (300 mm) past the furnishing, with the exception of picnic tables and benches, which shall extend 2 feet (600mm) minimum on all sides. The elevation of the finished concrete shall be plus 1 inch (25 mm) above adjacent grade.

G204003 1.2 TRASH RECEPTACLES

Trash receptacles, with drain hole, shall have stationary or self-closing lids with anchor chains secured to the receptacle to protect the contents from weather. Receptacles shall be designed to hold heavy-duty plastic or galvanized steel liners of the same manufacturer. Consideration shall be given to potential weight of full containers when deciding on 'top loading' or 'side loading' receptacles. Trash receptacles shall include a concrete pad 12 inches (300 mm) larger on all sides than the size of the trash

receptacles.

G204003 1.3 BENCH

Minimum 6 feet (1.8 meter) length to match trash and recycling receptacle material & color, installed a minimum of 18 inches (450 mm) above finish grade, permanently installed with anchor bolts or in-ground.

G204003 1.4 RECYCLING RECEPTACLES

Single-piece with separate slots for cans, bottles, newspaper. Height, material, and style shall match trash receptacle.

G204003 1.5 BARBEQUE

Minimum 12 inches (300 mm) x 18 inches (450 mm) with heavy-duty grill and hinged stainless steel lid, factory primed and painted with rust-resistant paint. Install so coal height is a minimum of 36 inches (0.91 meter) above finish grade.

G204003 1.6 HOT ASH RECEPTACLE

Minimum 28 square inches (181 square centimeters) x 42 inches (1.1 meter) high pre-cast reinforced concrete with drain hole with steel ash grate and cast in "Hot Coals Only" logos on each side with white letters on a red background.

G204004 SECURITY STRUCTURES

Where identified for project elsewhere in this RFP, provide active and passive vehicle barriers to effectively stop or detect penetration by explosive-laden vehicles through the perimeter of a protected area in accordance with MIL-HDBK-1013/14, *Selection and Application of Vehicle Barriers*.

G204005 SIGNAGE

Provide facility signage as required by local code, the Installation and Appearance Guide, the Base Exterior Architectural Plan (BEAP) and this RFP.

Size messages and graphics on signs according to the functional viewing distance. Typically, at least 1 inch (25 mm) of letter height per 25 feet (7.62 meters) of viewing distance is required for readability.

Refer to Section G201004, "Marking & Signage" for traffic signage.

G204007 PLAYING FIELDS

G204007 1.1 PLAYGROUNDS

Design playgrounds and provide surfacing and equipment in accordance with this RFP and U.S. Consumer Products Safety Commission Publication 325 and ASTM F 1487. Tot-Lots and Play-Lots shall be bordered with reinforced concrete curbing to a depth appropriate to the type safety surfacing utilized. Provisions for shade and wind protection shall be made where these elements may significantly limit the use of the facilities. Tot-lots and play-lots shall have separated areas with appropriately sized equipment and

materials to serve their developmental levels. The areas shall be separated by a buffer zone, which can be an area of shrubs, hardscape or benches. Tot-lots and play-lots shall have signage to give guidance to adults as to the age appropriateness of the equipment.

G204007 1.1.1 Tot Lots

Design each "tot lot" to accommodate children from ages 2 through 5 to provide a variety of play activities and motor skill development opportunities which may include, as a minimum:

Multi-activity structures shall have a minimum of two platforms and two slides, one wheel chair accessible, swing set for young children, paired spring mounted 'riders' or other similar types of apparatus. At least two benches, with backs, on concrete bases, shall be located for convenience to, and observation of, the tot-lot.

G204007 1.1.2 Play Lots

Design each "play lot" to accommodate children from ages 5 to 12 which provide a wider range of activities and opportunities for greater motor skills development and improvement. These may include, as a minimum:

Multi-activity structure shall have a minimum of three platforms and two slides, one wheel chair accessible. A swing set, or other similar types of apparatus. At least two benches, with backs, on concrete bases, shall be located for convenience to, and observation of, the play-lot.

G204007 1.1.3 Equipment

Tot lot and play lot equipment shall be factory finished institutional quality, in compliance with ASTM F1487, the United States Consumer Products Safety Commission's *Guidelines for Public Playgrounds*, UFC 3-210-04, *Design: Children's Outdoor Play Areas*, and the UFC 3-200-10N, *Civil Engineering*. Use only equipment that has been approved by IPEMA and installed by a NPCA contractor.

Tot lot and play lot equipment shall be sited to provide use and no encroachment zones in accordance with ASTM F1487. A use zone is a clear, unobstructed area under and around play equipment where a child would be expected to land when jumping or falling from a piece of play equipment. Requirements for use zones vary for the age group and for different pieces of equipment. All use zones for play equipment shall be shown on the site plan to ensure there is no conflict between play activities on the ground and swinging or jumping from the equipment. The No-encroachment zone is an additional area beyond the use zone where children using the equipment can be expected to move about and should have no encroaching obstacles. This area will vary according to the types of adjacent equipment, and their orientation to one another.

G204007 1.1.4 CCA-Treated Lumber

CCA-treated lumber shall not be used in recreational facilities for

children.

G204007 1.1.5 Playground Safety Surface

A playground safety surface, in accordance with ASTM F355 and ASTM F1292, shall be provided throughout all use zones and under all play equipment in tot lots and play lots. Natural wood products are not allowed for surfacing. Loose fill surfacing shall be a minimum of 4 inches (100 mm) below the top of edging. Local climate, soil conditions, location and size of area, type of activity, age of users, and intensity of use shall be considered when choosing surfacing material. Provide soil separator fabric between playground loose-fill material and subgrade soil. Provide 4 inch perforated pipe around perimeter of playground and slope to drain. Drain to sump a minimum of 20 feet out from the playground curbing or to storm drain.

G204007 1.2 PLAYING FIELDS

Provide playing surfaces in accordance with this RFP.

G204090 OTHER SITE IMPROVEMENTS

Other site improvements shall conform to the BEAP or Installation Appearance Plan (whichever is applicable) and to the requirements of UFC 4-010-01.

G204090 1.1 DUMPSTER PADS AND ENCLOSURES

G2050 LANDSCAPING

G2050 1.1 DESIGN

The design of landscaped areas shall be in accordance with Presidential Executive Order 13148 of April 2000, with a goal to reduce fertilizers, pesticides, and water use. The intent is to achieve a base-wide ratio of 20 percent maximum non-native plants and 80 percent minimum locally or regionally native plants. Do not use plants deemed invasive by the project state or region's Exotic Pest Plant Council, State Department of Agriculture or local chapter of the American Society of Landscape Architects as a threat to ecosystems or agriculture. All non-paved site areas inside the project limits or outside the project limits disturbed by construction operations, after meeting plant quantity requirements, shall be covered with plant material or inorganic mulch. Stabilized soil or organic mulch is not acceptable as a ground cover. For NAVFAC Southwest projects, eliminate or minimize the use of turf, except when needed for active or passive recreation. Provide landscape architectural work in accordance with UFC 3-201-02, *Landscape Architecture*. All projects with planting and or irrigation areas shall utilize the design services of a Landscape Architect licensed in the state of the project. The Landscape Architect of Record shall visit the site at least once prior to design, twice during construction, and quarterly during the Establishment Period, including the Establishment Period start and completion.

G205001 FINE GRADING AND SOIL PREPARATION

See Section G10, Site Preparation.

G205002 EROSION CONTROL MEASURES

See Section G10, Site Preparation.

G205003 TOP SOIL AND PLANTING BEDS

See paragraph titled, G205005 PLANTINGS.

G205004 SEEDING, SPRIGGING, AND SODDING

Areas that are to be seeded that are larger than 1,000 square feet (92.90 square meters) shall be hydroseeded. Hydroseed mix composition shall be appropriate for surrounding land use and compatible and consistent with local application rates, seed availability and established practice in the project area. If project dates are unknown, specify required planting dates or alternative species for different seasons. Apply seed at a time best suited for germination of the selected species. Seeded areas shall achieve a 95-percent coverage of the selected species and be weed free at the end of the Establishment Period.

G205005 PLANTINGS

G205005 1.1 EXISTING PLANT MATERIAL TO REMAIN OR BE TRANSPLANTED

Preserve existing trees to the greatest extent possible. The Contractor shall tag trees to be saved with plastic or vinyl tape tied to the tree caliper. The Contractor shall protect existing trees by fencing planting areas to remain from compaction and any other damage with a barrier of metal poles a maximum 8 feet (2.4 meter) on center with plastic netting to a minimum of 10 feet (3.0 meter) radius from outside of the tree’s trunk. Where tree drip lines are greater than 10 feet (3.0 meter) from the tree's trunk, locate barrier fencing at the drip line of the tree. The Contractor shall not allow debris from tree or stump removal operations to fall on or otherwise damage plants that are not scheduled for removal. Plastic tape and barrier fencing shall not be removed until planting operations are ready to begin and or instructed by the Contracting Officer. Existing trees to remain or to be transplanted that are unhealthy, that die, or have 20 percent or more of their crowns that die during the establishment period shall be replaced with healthy plants of the same species or variety during the appropriate planting season. During the landscape establishment period, trees, turf, shrubs, and ground cover that are damaged or destroyed during construction operations shall be replaced by the Contractor at no additional cost to the Government. The Contractor, at the direction of the Contracting Officer, shall remove the existing tree and stump and replace it with trees of the same genus and species equal to the total caliper of the existing tree. Minimum caliper of replacement trees shall be 4 inch (100 mm). Replace shrubs with 5 gallon (18.9 liter) size container, ground cover with flat containers planted at 8 inches (200 mm) on center, and turf with sod, all of the same genus and species.

G205005 1.2 UTILITIES

Trees shall not be placed within 10 feet (3 meter) of any above or below-grade utility line or structure. Within roadway sightlines, mature shrubs shall not be greater than 3 feet (1 m) in height and trees shall be limbed up a minimum of 6 feet (2 m) so their mature growth will not obstruct views from vehicle intersections or points of vehicle ingress or egress.

G205005 1.3 RECYCLING

Green waste: Contact the Public Works Department for potential green waste collection and hauling by the Government. Green waste not collected by the Government shall be separated from construction debris and delivered to the base's or local landfill's green waste recycling area. Quantify and report diverted waste to the Contracting Officer.

G205005 1.4 PLANTING

G205005 1.4.1 Plant Quantities

Provide trees at the rate of one (1) tree per 1,000 square feet (92.9 square meters) of Landscape Area. Landscape area is defined as all permeable areas within the project boundaries not covered by buildings, roads, parking lots, sidewalks, and other non-permeable areas. Total minimum quantities may be reduced only by the reviewing government landscape archtect. For bioretention areas, minimum quantities of trees, shrubs, and ground covers shall be as required by State regulations. Provide a minimum tree size of 24 inch (600 mm) box/2 inch (50 mm) caliper, or if within an anti-terrorism zone provide a minimum size of 36 inch (910 mm) box/3 inch (76 mm) caliper. For trees within concrete or other non-permeable paved areas, allow a minimum non-paved planting area of 4 feet by 8 feet (1.2 m by 2.4 m) per tree.

For NAVFAC Southwest only: A minimum of forty percent (40%) of the landscaped areas shall be planted with shrubs and groundcover so that at 50 percent (50%) plant maturity, they will form mass plantings. Utilize a minimum ratio of 60 percent (60%) 5 gallon (18.9 liter) shrubs or groundcover and 40 percent (40%) 1 gallon (3.79 liter) shrubs or groundcover. The remaining sixty percent (60%) of the landscape area may be inorganic mulch, decomposed granite, planted or a combination. For inorganic mulch, provide 3 inch (76 mm) depth of 3/4-inch (19 mm) and smaller rock, and for larger than 3/4-inch (19 mm) size, assure complete ground surface coverage. For decomposed granite, provide 2 inch (50 mm) minimum depth. Do not use decomposed granite as a ground cover on slopes 5:1 and greater.

For all other NAVFAC Regions: Plant the majority of shrubs at major entrances to buildings and at other important planting zones that are specific to each site. The overall design intent should be to plant mostly trees and turf, with shrubs and ground covers used sparingly, to reduce maintenance costs while still providing for functional planting requirements (e.g., soil stabilization, energy conservation, force protection, and aesthetics). Provide a minimum size 3 gallon (11.4 liter) container for shrubs and 1 gallon (3.79 liter) container for ground covers.

G205005 1.4.2 Plant Quality

All plants shall comply with ANSI Z60.1 and ANSI Z133.1, current editions. All plants shall be in a healthy, disease and pest free condition. All seed, sod, and sprigs shall be State Certified.

G205005 1.4.3 Plant Selection

The reviewing Government Landscape Architect shall have final approval authority on all selected plant material. Species deemed unsuitable for planting by the Government Landscape Architect will not be allowed.

G205005 1.4.4 Plant Installation

Planting operations, including but not limited to planting soil mixes and fertilization, shall comply with local established practices and agricultural extension service recommendations. Stake or guy new or transplanted trees with three stakes [2 – 2 Â½ inch(63.5 mm) x 8 feet (2.4 m) hardwood], or three guy cables [five-strand, 3/16 inch (5 mm) diameter galvanized steel cable].

G205005 1.4.5 Edging Materials and Mulching Materials

Provide 3/16 inch (5 mm) thick by 4 inch (100 mm) deep galvanized steel or 6 inch (150 mm) by 6 inch (150 mm) concrete edging dividing all turf and shrub areas and dividing all planted and non-planted inorganic mulch areas. Plastic edging is not allowed. Mulch planted areas not mulched with inorganic mulch or stabilized decomposed granite with a 3-inch (75 mm) depth of organic shredded hardwood mulch during the Establishment Period while plants are growing to form a mass.

G205005 1.4.6 Fertilizer

Fertilize all transplanted trees, new trees, shrubs, ground covers, turf, perennials and ornamental grasses as recommended by local agricultural extension services.

G205005 1.4.7 Weed Fabric and Erosion Control Fabric

Provide a weed barrier fabric of sheet polypropylene or polyester fabric specifically designed for weed control purposes beneath all planted or mulched non-planted areas. Fabric shall be treated for protection against deterioration due to ultraviolet radiation. Fabric shall be a minimum 99 percent opaque to prevent photosynthesis and seed germination from occurring, yet allowing air, water and nutrients to pass through to the roots. Minimum weight shall be 5 ounces per square yard (0.11 kg per square meter) with a minimum thickness of 20 mils (0.50 mm) with a 20 year minimum guarantee. Provide a biodegradable product designed specifically for erosion control on all sloped areas 3:1 and greater in slope.

G205005 1.4.8 Drainage

Provide for proper grading and drainage of turf and planting areas. Provide sub-surface drainage where soil or other conditions do not allow surface drainage. Do not drain roof gutters into planter areas.

G205007 IRRIGATION SYSTEMS

G205007 1.1 IRRIGATION

Where irrigation system is required per other parts of this RFP, provide a permanent, below-grade system. Provide 100 percent sprinkler head to head coverage. Provide pop-up heads in turf and landscape zones when adjacent to walks, roads, parking lots, or in sparsely planted landscape areas where pedestrians may circulate. Provide pop-up heads project-wide on high-traffic sites such as, but not limited to, dining, housing, entertainment, daycare, education and recreation facilities. Verify adequate water pressure for irrigation purposes and provide booster pumps and or pressure regulation as required. Provide minimum 12 inch (300 mm) cover over PVC irrigation pipe. 1/2-inch (13mm) pipe is not allowed. The Landscape Contractor shall test the entire system in the presence of the Contracting Officer and Landscape Architect-of-Record to ensure proper performance. All irrigation components shall be commercial or institutional quality. Provide rain shut-off device and watertight splices. Sprinkler heads, bodies and nozzles shall be of the same manufacturer.

G205007 1.2 OPERATION AND CONTROL

Assure systems will automatically operate on an "irrigation window" between 2130-0530. Provide compatible and fully functional control if a central control system exists on base. Otherwise, provide evapotranspiration-measuring control with flow meter and master valve with controller capable of indicating visible or auditory notification, such as a blinking light or beeping sound, of system shut-off.

G205007 1.3 ZONING

Provide separate control valves for differing solar exposures, for areas with differing irrigation head types or differing precipitation rates, and top and bottom of slopes. Provide a separate irrigation backflow prevention device and water meter. Turf and shrubs/groundcover are not allowed on the same valve. Provide separate concrete valve box with cast iron lid and valve ID for each valve and wire splice. Provide quick coupling valves at 100 feet (30 m) on center. Provide in-head check valves for sloped areas with 0.5 feet (150 mm) or more in elevation change.

G205007 1.4 TEMPORARY IRRIGATION

Provide ultra-violet resistant pipe and fittings for above-grade, temporary irrigation. Only non-pressure pipe is allowed above grade. Irrigation systems intended to remain in place longer than one year shall be installed below grade.

G205007 1.5 NON-POTABLE IRRIGATION

Provide lavender-colored pipe, sprinkler head and quick coupler caps, valve tags, signage, and associated filtration equipment.

G205007 1.5.1 Controller Charts

Provide one chart for each new controller or existing re-sequenced controller. The chart shall be an actual plan reduced to fit inside maximum dimensions of the controller housing. Use black line print for chart and a different color to indicate each station area of coverage. After chart is completed and approved for final

acceptance, seal chart between two 20 mil (0.5 mm) pieces of clear plastic. The chart shall be affixed to the inside of the controller cabinet door using approved mastic or fastening system.

-- End of Section --

THIS PAGE HAS BEEN INTENTIONALLY LEFT BLANK

SECTION G30

SITE CIVIL/MECHANICAL UTILITIES
11/10

G30 GENERAL

RFP Part 3 including the Engineering System Requirements (ESR) provide project specific requirements. The RFP Part 4, Performance Technical Sections (PTS) provide generalized technical requirements that apply to multiple facility types and include more requirements than are applicable to any one project. Therefore, only the RFP Part 4 requirements that apply to the project and further define the RFP Part 3 project specific requirements are required.

G30 1.1 DESIGN GUIDANCE

Provide the design and installation in accordance with the following references. This Performance Technical Specification (PTS) adds clarification to the fundamental requirements contained in the following Government Standards. The general requirements of this PTS section are located in PTS Section Z10, *General Performance Technical Specification*.

G30 1.1.1 Industry Standards and Codes

AMERICAN SOCIETY OF MECHANICAL ENGINEERS (ASME)

G30 1.1.2 Government Standards

UNIFIED FACILITIES CRITERIA (UFC)

UFC 1-200-01	General Building Requirements(A reference in this PTS section to UFC 1-200-01 requires compliance with the Tri-Service Core UFCs that are listed in UFGS Section 01 33 10.05 20, which includes the following significant UFC(s):UFC 3-200-10N, Civil EngineeringUFC 3-400-10N, Mechanical Engineering)
UFC 3-800-10N	Environmental Engineering for Facility Construction

G30 1.2 QUALITY ASSURANCE

Materials and assemblies installed in the work shall be inspected and found to be in compliance with industry standards and these specifications prior to acceptance of the work. Items found not to be in compliance shall be removed, or corrective measures taken, to assure compliance with the referenced standard. The Contractor shall perform field tests and provide labor, equipment and incidentals required for testing.

G30 1.2.1 Materials

All materials shall be new, and shall bear the label of standardizing agency whenever standards have been established and label service is normally and regularly furnished by the agency. All equipment provided shall be listed and labeled suitable for the specified purpose, environment, and application and installed in accordance with manufacturer’s recommendations.

G30 1.2.2 Additional Work

Provide such other labor and materials as are required for a complete and usable system in accordance with the requirements of the criteria listed, regardless of whether such materials and associated labor are called for elsewhere in this RFP.

G30 1.2.3 Qualifications of Well Drillers for Water Supply Wells

If required by the state waterworks' regulations, the well driller shall be certified by the state and shall remain certified while constructing the well.

G30 1.2.4 Qualifications of Coating Contractors for Water Storage Tanks

All contractors and subcontractors that perform surface preparation or coating application shall be certified by the Society for Protective Coatings (formerly Steel Structures Painting Council)(SSPC) to the requirements of SSPC QP 1 prior to contract award, and shall remain certified while accomplishing any surface preparation or coating application.

G30 1.2.5 Qualifications of Oil/Water Separator Manufacturers

Manufacturers shall have produced packaged oil/water separate units of similar size required for over five years.

G30 1.3 PERFORMANCE VERIFICATION AND ACCEPTANCE TESTING

Compliance with the requirements will be determined by a review of the design and construction submittals and by field inspection. See Section 01 33 10.05 20, *Design Submittal Procedures*, and Section 01 33 00.05 20, *Construction Submittal Procedures*, for additional requirements.

Verification of satisfactory utility system performance shall be via Performance Verification Testing, as detailed in this section of the RFP. Verification of satisfactory performance shall also be via testing as detailed in the paragraph, "Field Quality Control", in applicable UFGS Specification Sections utilized.

G30 1.3.1 Water Supply Well Performance Verification

Upon completion of the permanent well, conduct performance testing for well capacity, drawdown and pump equipment and water quality testing in accordance with AWWA A100 and its appendices and the state

waterworks' regulations.

G30 1.3.2 Water Distribution System Verification Testing

Provide testing on water mains and service lines in accordance with the state waterworks' regulations and the following:

a. Ductile Iron and other materials: AWWA C600.
b. PVC: AWWA C605.

Do not begin testing on any section of a pipeline where concrete thrust blocks have been provided until at least 5 days after placing of the concrete.

G30 1.3.3 Water Booster Pump Station Verification Testing

Test the water booster pump station in accordance with the state waterworks' regulations. Conduct testing on discharge and site piping in accordance with tests for water distribution mains; see G30, paragraph 1.3.2. Test pumps, controls, and alarms, in operation, under design conditions to ensure proper operation of all equipment.

G30 1.3.4 Sanitary Sewer Distribution System Verification Testing

Provide testing on sewer mains and laterals in accordance with the state sewerage regulations.

G30 1.3.4.1 Deflection Test

Deflection of pipe in the installed pipeline under external loads shall not exceed 4.5 percent of the average inside diameter of pipe, in accordance with ASTM D 2412.

G30 1.3.4.2 Leakage Tests

G30 1.3.5 Sanitary Sewer Manholes Verification Testing

Provide testing on sanitary sewer manholes in accordance with the state sewerage regulations. At minimum, perform hydraulic testing in accordance with ASTM C 969M (ASTM C 969).

G30 1.3.6 Wastewater Pump Station Verification Testing

Test the wastewater pump station in accordance with the state sewerage regulations. Conduct testing on discharge piping and force main in accordance with tests for water distribution mains; see G30, paragraph 1.3.2. Test pumps, controls, and alarms, in operation, under design conditions to ensure proper operation of all equipment.

G30 1.3.7 Storm Sewer System Verification Testing

G30 1.3.7.1 Deflection Test

Deflection of pipe in the installed pipeline under external

loads shall not exceed 4.5 percent of the average inside diameter of pipe, in accordance with ASTM D 2412.

G30 1.3.7.2 Leakage Tests for Storm Sewer Under Pavements

Test lines for leakage by either infiltration tests or exfiltration tests, or by low-pressure air tests in accordance with the following:

a. Exfiltration Tests:

ASTM C 969M (ASTM C 969) and perform calculations in accordance with its Appendix.

b. Low-pressure Air Tests:

1) Pipelines: ASTM C 924M (ASTM C 924) and perform calculations in accordance with its Appendix.

2) PVC plastic pipelines: UBPPA UNI-B-6 and perform calculations in accordance with its Appendix.

G30 1.4 DESIGN SUBMITTALS

Design Submittals shall be in accordance with UFGS section 01 33 10.05 20, *Design Submittal Procedures*, UFC 1-300-09N, *Design Procedures*, UFC 3-200-10N, *Civil Engineering*, and UFC 3-400-10N, *Mechanical Engineering*.

G30 1.5 CONSTRUCTION SUBMITTALS

Submit construction submittals in accordance with PTS Section Z10, *General Performance Technical Specifications*. In addition to the Z10 requirements, the Designer of Record (DOR) shall approve the following construction submittals as a minimum:

All test reports.

G30 1.6 COORDINATION

To the extent that site work is indicated on the RFP drawings, the Contractor shall verify that the locations and inverts of all site utility lines are coordinated with building utility lines. If necessary, the Contractor shall make adjustments to the locations and inverts indicated on the RFP drawings in accordance with applicable codes and standards.

G30 1.7 ANTITERRORISM (AT) STANDARDS

Incorporate the minimum AT standards indicated in UFC 4-010-01, *DoD Minimum Antiterrorism Standards for Buildings*.

G30 1.8 BACKFLOW PREVENTION

The Contractor shall submit backflow prevention training certificates and backflow preventer devices certification in accordance with Section 01 50 00.05 20 (01501N), *Temporary Facilities and Controls for Design-Build*.

G30 1.9 WATER STORAGE TANK

The Contractor shall submit a certificate signed by a registered professional engineer providing a (1) description of the entire tank and foundation structural design loading conditions; (2) description of structural design methods and codes used in establishing allowable stresses and safety factors; (3) statement that the structural design has been checked by experienced engineers specializing in hydraulic structures to ensure that design calculations for member sizes, dimensions and fabrication processes are as prescribed by ACI and AWWA standards; and (4) certification that the completed work was inspected in accordance with AWWA D100 or AWWA D103 as applicable.

G30 1.10 NACE CERTIFIED CATHODIC PROTECTION SPECIALIST QUALIFICATIONS

Submit prior to site welding. Certifications shall not be more than one year old. Submit documentation of NACE certification.

G30 1.11 EXCAVATION, BACKFILLING AND COMPACTION OF UTILITIES

Refer to Section G10, *Site Preparation*.

G30 1.12 DELIVERY, STORAGE AND HANDLING OF MATERIALS

Inspect materials delivered to site for damage. Unload and store with minimum handling. Store materials on site in enclosures or under protective covering. Store plastic piping, jointing materials and rubber gaskets under cover out of direct sunlight. Do not store materials directly on the ground. Keep inside of pipes, fittings, valves, and hydrants free of dirt and debris. Handle in a manner to ensure delivery to the trench in sound undamaged condition. Take special care to avoid injury to coatings and linings on pipe and fittings; make satisfactory repairs if coatings or linings are damaged. Carry, do not drag pipe to the trench.

G3010 WATER SUPPLY

G3010 1.1 WATER SYSTEM DESIGN

The Contractor shall determine domestic and fire demands for the facility and shall verify the design of all components of the domestic and fire protection supply systems. The water system design and construction shall be in accordance with UFC 3-200-10N, *Civil Engineering*, the state waterworks' regulations, and the utility provider's requirements. Design the water supply systems to provide required flows and maintain residual pressures based upon peak demands.

If the new water system is an extension of an existing water system, the Contractor shall obtain all necessary static pressure, residual pressure and flow characteristics of the existing distribution system by actual field tests. The Contractor shall conduct flow and pressure tests and provide design calculations that show the existing lines are capable of handling the additional flows. The new water system shall connect to the nearest existing fitting or water line.

The Contractor shall design the connections to the water system including the necessary meter assemblies and backflow-preventing devices in accordance with the requirements of the Activity or utility provider and the state waterworks regulations.

Wherever possible, valve boxes and all other utility access structures shall be located out of paved areas.

G301001 WELL SYSTEMS

The potable water well system shall be designed and constructed in accordance with AWWA A100 and its appendices; the state waterworks' regulations, and the system owner's preferences and requirements.

G301001 1.1 WATER METER

Provide a water meter on the well pump discharge piping aboveground in a pump enclosure or in a meter vault underground. Provide type of water meter and remote reading capability in accordance with system owner's preferences and requirements: AWWA C700, displacement type; AWWA C701, turbine type; or AWWA C702, compound type.

G301001 1.2 TEST HOLE

Drill test hole(s) at the well site before construction of the permanent well to determine the existing site-specific geologic/hydrologic conditions and groundwater-quality parameters. A test hole may be incorporated into the finished construction provided it meets the requirements for a finished well. Seal test holes not used in finished construction as recommended in accordance with AWWA C654 and the state waterworks' regulations. Upon completion of test hole, provide recommendations for permanent wells and submit data obtained at each well site. Include with the recommendations the appropriate depth, details of construction, length and location of screens, screen openings, gravel size, grout, and an estimation of the quantity of water that can be obtained from each water-bearing stratum and from each completed well. Submit electric log, a drillers log drawn to scale with coarseness and fineness modulus of each strata, time penetration log (time to drill through each formation), and sieve analysis to substantiate recommendations.

G301001 1.3 WELL CONSTRUCTION

G301001 1.3.1 Well Development

Provide well development in accordance with AWWA A100 and the state waterworks' regulations.

G301001 1.3.2 Disinfection

Disinfect well, equipment, and material in accordance with AWWA C654 and the state waterworks' regulations. Provide a sanitary seal for the well to prevent contamination until the pump foundation and pump are installed on the well.

G301001 1.4 ABANDONMENT OF EXISTING WELLS

Abandon and seal existing wells in accordance with AWWA A100 and the state waterworks' regulations.

G301002 POTABLE WATER DISTRIBUTION

G301002 1.1 WATER SYSTEM DESIGN

Provide all materials, equipment, labor, testing, and miscellaneous related items for water distribution mains and service lines to the facility and connections to the existing water system in accordance with UFC 3-200-10N, *Civil Engineering*; the utility provider's requirements; and the state waterworks' regulations; whichever is more stringent.

Available flow at the residual pressure at each point of connection shall be determined by conducting flow tests in accordance with AWWA M17 and NFPA 291.

Water main piping, service lines, fittings, valves, accessories and all other materials shall meet the American Water Works Association (AWWA) standards for a minimum system working pressure of 150 psi (1050 kPa).

G301002 1.2 WATER DISTRIBUTION MAINS

For underground applications, water mains 12 inches (300 mm) in diameter and less shall be ductile iron, PVC, or high density polyethylene (HDPE). Water mains deeper than 10 feet (3.0 m) or larger than 12 inches (300 mm) in diameter shall be ductile iron.

For aboveground applications, water mains shall be flanged ductile iron pipe.

G301002 1.2.1 Materials

a. Ductile Iron Pressure Pipe

   1) Pipe: AWWA C151, Pressure Class 350.

   2) Fittings: AWWA C110 or AWWA C153.

   3) Interior Lining: AWWA C104.

   4) Exterior Protection (if required): AWWA C105, polyethylene encasement.

b. PVC Pressure Pipe

   1) Pipe: AWWA C900, Pressure Class 150.

   2) Fittings: Ductile Iron (AWWA C110 or AWWA C153).

c. HDPE Pressure Pipe: AWWA C906.

d. Flanged Ductile Iron Pipe

   1) Pipe: AWWA C115 and its appendices.

2) Fittings: AWWA C110 or AWWA C153.

3) Lining: AWWA C104.

G301002 1.2.2 Installation

a. Ductile Iron: AWWA C600.
b. PVC: AWWA C605.
c. HDPE: applicable requirements of ASTM D 2774.

Provide a continuous length of tracer wire for the full length of each run of nonmetallic pipe.

G301002 1.2.3 Connections to Existing Water Lines

Make connections to existing water lines after approval from the system owner is obtained and with a minimum interruption of service on the existing line. Make connections to existing lines under pressure in accordance with the recommended procedures of the manufacturer of the pipe being tapped.

G301002 1.3 WATER SERVICE LINES

Water service lines less than 4 inches (100 mm) in diameter shall be copper tubing, PVC, or polyethylene (PEX) tubing. Water service lines 4 inches (100 mm) and 6 inches (150 mm) in diameter shall be ductile iron pipe and PVC pressure pipe; see G301002, paragraph 1.2, "Water Distribution Mains" for additional requirements for ductile iron and PVC piping.

G301002 1.3.1 Materials

a. Copper Tubing

1) Pipe: ASTM B 88M (ASTM B 88), Type K.

2) Fittings for Solder-Type Joint: ANSI B16.8 or ASME B16.22.

3) Fittings for Compression-Type Joint: ASME B16.26, flared tube type.

b. PVC Pressure Pipe

1) Pipe: ASTM D1785, Schedule 40 or ASTM D 2241, with SDR rating for 160 psi (1.1 MPa) pressure rating.

2) Fittings: ASTM D 2466.

3) Joints: Elastomeric gaskets for pressure rating; solvent cement joints, ASTM D 2564.

c. Polyethylene Tubing: AWWA C901.

G301002 1.3.2 Service Connections

Connect service lines 2-inch (50 mm) diameter or less to the main by

a corporation stop and install a gate valve on service line below the frostline.

a. Ductile-iron water mains: AWWA C600.
b. PVC water mains: UBPPA UNI-B-8 and the recommendations of AWWA M23, Chapter 9, "Service Connections."

G301002 1.3.3 Installation

Install pipe, fittings and accessories in accordance with manufacturer's instructions.

a. Metallic Piping: applicable requirements of AWWA C600.
b. PVC: applicable requirements of ASTM D 2774 and ASTM D 2855.
c. Polyethylene: applicable requirements of ASTM D 2774 and ASTM F 645.

G301002 1.4 CORROSION PROTECTION

G301002 1.4.1 Insulating Joints

Provide insulating joints to prevent contact between dissimilar metals at the joint between adjacent sections of piping in accordance with the pipe manufacturer’s recommendations. Ensure that there is no metal-to-metal contact between dissimilar metals after the joint has been assembled.

To prevent the possibility of bi-metallic corrosion, service lines of dissimilar metal to the water mains and the attendant corporation stops shall be wrapped with polyethylene or suitable dielectric tape for a minimum clear distance of 3 feet (900 mm) from the main.

G301002 1.5 VALVES

Valves shall be the same diameter and have the same joint ends as the mains to which they are installed. Each type of valve shall be of one manufacturer.

G301002 1.5.1 Gate Valves

G301002 1.5.1.1 Location

Valves shall be installed at all new points of connection. At a minimum, valves shall be located to ensure that no more than two fire hydrants will be out of service in the event of a single break in a water main. Valves shall be located outside of pavement and heavy traffic areas whenever possible.

G301002 1.5.1.2 Gate Valves 3-inch (75 mm) and Larger in Diameter

a. Valves (20-inch and smaller in diameter): AWWA C509 or AWWA C515, nonrising stem and of one manufacturer.
b. Valves (greater than 20-inch in diameter): AWWA C500.
c. Valves for Indicator Post: AWWA C500 with indicator post

flange in accordance with applicable requirements of UL 262.

d. Interior Coating: AWWA C550.

G301002 1.5.1.3 Gate Valves Smaller than 3-inch (75 mm) in Diameter

MSS SP-80, Class 150, solid wedge. Valves shall have flanged or threaded end connections, with unions on both sides of the valve and a handwheel operator.

G301002 1.5.1.4 Valve Box

Provide a cast iron, adjustable, valve box for each gate valve on buried piping. Valve boxes shall be of a size suitable for the valve on which it is to be used with a minimum diameter of 5-1/4 inches (130 mm). Provide a round head and cast the word "WATER" on the lid.

G301002 1.5.2 Check Valves

Valves sized 2-inches (50 mm) to 24-inches (600 mm) shall be swing-check type (AWWA C508) and have a protective epoxy interior coating conforming to AWWA C550. For underground applications, provide check valve in a valve vault.

G301002 1.5.3 Air Release, Air/Vacuum, and Combination Air Valves

AWWA C512 and AWWA M51.

G301002 1.5.4 Corporation Stops

If service lines 2—inch diameter or less are tapping water mains, provide corporation stops. The corporation stops shall be ground key type, bronze, ASTM B61 or ASTM B62.

G301002 1.5.5 Installation of Valves

Make and assemble joints to valves as specified for making and assembling the same type of joints between pipe and fittings.

G301002 1.6 WATER METERS

Provide water meter and remote reading as required by the utility provider and in accordance with AWWA standards.

G301002 1.7 BACKFLOW PREVENTION

Provide backflow prevention and cross connection control in accordance with AWWA M-14 and governing local/state plumbing codes and waterworks' regulations.

G301002 1.8 FIRE HYDRANTS

Fire hydrants shall all be of one manufacturer. Provide protection for fire

hydrants located in areas subject to vehicle damage. Fire hydrants shall have National Standard threads on hose and pumper connections. Provide a 6 inch (150 mm) inlet, two 2.5 inch (62 mm) hose connections and one pumper connection sized to accommodate local fire department equipment requirements. Stencil hydrant number and main size on the hydrant barrel using black stencil paint.

a. Dry Barrel Fire Hydrants: AWWA C502 with frangible sections.
b. Wet Barrel Fire Hydrants: AWWA C503 or UL 246, "Wet Barrel" design, with breakable features.
c. Installation: Install hydrants with the pumper connection facing the adjacent paved surface. If there are two, paved adjacent surfaces, contact the Contracting Officer for further direction.

G301002 1.9 THRUST RESTRAINT

Provide thrust restraint for all piping, valves, fittings, and other appurtenances of the water distribution system.

a. Concrete Thrust Blocks: AWWA C600.
b. Restrained Joints: Pipe manufacturer's recommendations and required length of pipe to be restrained calculated in accordance with UFC 3-200-10N, *Civil Engineering*.

G301002 1.10 DISINFECTION

Disinfect new water piping and existing water piping affected by Contractor's operations in accordance with the state waterworks' regulations and AWWA C651.

G301003 POTABLE WATER STORAGE

G301003 1.1 POTABLE WATER STORAGE TANKS

Provide potable water storage facilities in accordance with UFC 3-200-10N, *Civil Engineering*, and the state waterworks' regulations.

An elevated, steel water storage tank shall be in accordance with AWWA D100. A ground, steel water storage tank shall be in accordance with AWWA D100 for welded tanks and AWWA D103 for bolted tanks.

G301003 1.2 TANK ACCESSORIES

Piping and valves shall be in accordance with G301002. An altitude valve shall be installed in a valve vault with appropriate shut off valves and check valve.

G301003 1.3 TANK COATINGS

G301003 1.3.1 Interior Coating System

Provide interior coating system complying with NSF 61 and the state waterworks' regulations.

G301003 1.3.2 Exterior Coating System

Primer coat shall be epoxy polyamide, MIL-DTL-24441/19 (Formula 159, Type III). Intermediate coat shall be epoxy polyamide, MIL-DTL-24441/31 (Formula 152, Type IV, White (Tinted)). Tint to approximately FED-STD-595 color number 27778 parchment using pigment dispersions prepared for epoxy paint tinting. Manufacturer shall tint material and appropriately label. All other requirements of this Military Specification apply.

Provide polyurethane coating topcoat of MIL-PRF-85285, Type II, Beige FED-STD-595 color number 27769 in gloss. The color of the final coat shall be approved in writing by the Contracting Officer before application begins.

G301004 FIRE PROTECTION WATER DISTRIBUTION

G301004 1.1 GENERAL REQUIREMENTS

Refer to applicable portions of Section G301002 and Section D40, *Fire Protection Systems*. Water main piping, service lines, fittings, valves, accessories and all other materials shall meet the American Water Works Association (AWWA) standards for a minimum system working pressure of 200 psi (1380 kPa).

G301004 1.2 DETECTOR CHECKS

UL 312; detector check shall include bypass meter, piping, gate valves, check valve and connections to detector check valve. Set valve to allow minimal water flow through bypass meter when major water flow is required.

G301004 1.3 FIRE DEPARTMENT CONNECTIONS

UL 405.

G301004 1.4 INDICATOR POSTS

UL 789.

G301005 FIRE PROTECTION WATER STORAGE

Refer to G301003.

G301006 NON-POTABLE WATER DISTRIBUTION

Refer to G301002; note that system disinfection is not required.

G301007 PUMPING STATIONS

If a pump station is allowed, provide a packaged booster pump station including pumps, piping, valves, sensors, controls, and accessories to maintain the water system pressure in accordance with UFC 3-200-10N, *Civil Engineering*, and the state waterworks' regulations.

The packaged booster pump station shall have an Underwriter's Laboratories (UL) label indicating compliance of the equipment under the packaged pumping systems UL listing category. This label shall be inclusive of the entire station with enclosure so as to demonstrate compliance with the National Electrical Code requirements for working clearances and wiring procedures.

All interior coatings of pumps, piping, valves and other accessories shall be a National Standard Foundation (NSF) Standard 61 certified material for potable water.

G301008 PACKAGED WATER TREATMENT PLANTS

Provide packaged water treatment plants in accordance with UFC 3-200-10N, *Civil Engineering*, for pipeline materials and the state waterworks' regulations for treatment plant requirements.

G3020 SANITARY SEWER

G3020 1.1 GENERAL REQUIREMENTS

The gravity sanitary sewage collection system shall be designed and constructed in accordance with UFC 3-200-10N, *Civil Engineering*, and the state sewer collection and treatment regulations. The new sanitary sewage collection system shall connect to the nearest existing sanitary manholes or sanitary line adjacent to the project site. The Contractor shall provide design calculations that show the existing system is capable of handling the additional flows.

In areas where chemicals and other substances may be stored (including mechanical and electrical rooms), the contractor shall eliminate floor drains or shall make provisions made to prevent spills from entering the sanitary sewer system. If there is process flow from equipment, discharge can be hard piped, with air gap, to the sanitary sewer.

Wherever possible, manholes and all other utility access structures shall be located out of paved areas.

G302001 SANITARY SEWER PIPING

G302001 1.1 GENERAL REQUIREMENTS

Provide all materials, equipment, labor, testing, and miscellaneous related items to provide sanitary sewage lines necessary for collection and services from the buildings.

G302001 1.2 GRAVITY SEWER PIPING

Gravity sewer mains and laterals shall be PVC sewer pipe and fittings, except under roadways or at depths greater than 10 feet (3.0 m) where ductile iron pipe shall be provided.

G302001 1.2.1 Materials

a. PVC Gravity Sewer Pipe

1) Piping and Fittings: ASTM D 3034, SDR 35.

2) Joints: ASTM D 3212 and ASTM F 477.

b. Ductile Iron Gravity Sewer Pipe

1) Piping: ASTM A 746. Provide required Thickness Class based on design information and methods in ASTM A 746.

2) Fittings: AWWA C110 or AWWA C153.

3) Joints: AWWA C111.

4) Interior Coating: AWWA C104.

5) Exterior Protection (if required): AWWA C105, polyethylene encasement.

G302001 1.2.2 Connections to Existing Lines

Obtain approval from the Contracting Officer before making a connection to an existing line. Conduct work so that there is minimum interruption of service on existing line and provide a new manhole at the connection point.

G302001 1.2.3 Installation

Install pipe, fittings and accessories in accordance with manufacturer's instructions.

a. PVC: ASTM D 2321. Do not use ASTM D 2321 Class IV or V materials for bedding, haunching or initial backfill materials.

b. Ductile Iron: AWWA C600.

G302001 1.3 PIPING FOR CLEANOUTS

G302001 1.3.1 Materials

a. Cast-Iron Soil Pipe for Cleanouts

1) Pipe: ASTM A 74, service.

2) Joints: ASTM C 564 compression-type rubber gaskets.

3) Exterior Protection (if required): AWWA C105, polyethylene encasement.

G302001 1.3.2 Installation

Install cast iron pipe and fittings in accordance with the recommendations of the pipe manufacturer.

G302002 SANITARY SEWER MANHOLES & CLEANOUTS

G302002 1.1 GENERAL REQUIREMENTS

Provide all materials, equipment, labor, testing, and miscellaneous related items for the sanitary manholes in accordance with the following:

a. Manhole rim elevations shall be set flush with finished surface of paved areas or 1 inch (25 mm) above finished grade in unpaved areas.
b. Resilient connectors for making joints between manhole and pipes entering manhole shall conform to ASTM C 923M (ASTM C 923).
c. Provide drop manholes when a gravity sewer pipe enters a manhole at an elevation of 24 inches (610 mm) or more above the manhole invert.

G302002 1.2 PRECAST CONCRETE MANHOLES

ASTM C 478M (ASTM C 478); base and first riser shall be monolithic.

Precast manhole sections shall have:

a. ASTM C 990M (ASTM C 990) butyl gaskets;
b. ASTM C 443M (ASTM C 443) rubber O-ring joints; or
c. AASHTO M 198, Type B preformed plastic gaskets.

G302002 1.3 CAST-IN-PLACE CONCRETE MANHOLES

Reinforced concrete; designed according to ASTM C 890 for A-16 (AASHTO HS20-44), heavy-traffic, structural loading. Concrete work shall be in accordance with ACI 301M (ACI 301) and ACI 350-01; provide a minimum compressive strength of 4000 psi (28 MPa).

G302002 1.4 MANHOLE FRAMES AND COVERS

FS A-A-60005; cast iron or ductile iron; designed to accommodate the traffic loadings. The word "Sewer" shall be stamped or cast into covers so that it is plainly visible.

G302002 1.5 MANHOLE STEPS

a. Zinc-coated steel: 29 CFR 1910.27.
b. Plastic or rubber coating pressure molded to steel: ASTM D 4101, copolymer polypropylene; or ASTM C 443M (ASTM C 443), except shore A durometer hardness shall be 70 plus or minus 5.

Aluminum steps or rungs will not be permitted.

Steps are not required in manholes less than 4 feet (1.2 m) deep.

G302002 1.6 MANHOLE CONSTRUCTION

Where a new manhole is constructed on an existing line, remove existing pipe as necessary to construct the manhole. Cut existing pipe so that pipe ends are approximately flush with the interior face of manhole wall, but not protruding into the manhole. For changes in direction of the sewer and entering branches into the manhole, make a circular curve in the manhole invert of as large a radius as manhole size will permit. For cast-in-place

concrete, no parging will be permitted on interior manhole walls.

G302002 1.7 CONNECTIONS TO EXISTING MANHOLES

Pipe connections to existing manholes shall be centered on the manhole. Holes for the new pipe shall be of sufficient diameter to allow packing cement mortar around the entire periphery of the pipe but no larger than 1.5 times the diameter of the pipe. Cutting the manhole shall be done in a manner that will cause the least damage to the walls.

G302002 1.8 CLEANOUTS

Construct cleanouts of cast iron soil pipe and fittings; see G302001, paragraph 1.3.

G302003 LIFT STATIONS AND PUMPING STATIONS

G302003 1.1 GENERAL REQUIREMENTS

If a pump station is allowed, provide all materials, equipment, labor, testing and miscellaneous related items for a packaged lift or pump station system for the facility in compliance with the UFC 3-200-10N, *Civil Engineering*; the state sewerage regulations; and the utility provider's requirements.

G302003 1.2 SUBMERSIBLE PUMPS

Pumps handling raw wastewater shall be capable of passing spheres of at least 3 inches (75 mm) in diameter. The pump's suction and discharge openings shall be at least 4 inches (100 mm) in diameter.

Provide submersible type sewage pumps, with guide rail system. Include ASTM A48M (ASTM A48), Class 25, nonclog, cast-iron impeller; and hermetically sealed motor with moisture-sensing probe, mechanical seals, and waterproof power cable. Guide rail system shall be constructed of stainless steel. Provide a stainless steel lifting chain for raising and lowering the pump in the basin.

G302003 1.3 GRINDER PUMPS

Provide grinder-type sewage pumps, with guide rail system. Include stainless steel or bronze impeller and hermetically sealed motor with moisture-sensing probe, mechanical seals, and waterproof power cable. Guide rail system shall be constructed of stainless steel. Provide a stainless steel lifting chain for raising and lowering the pump in the basin.

G302003 1.4 SUCTION LIFT PUMPS

Pumps handling raw wastewater shall be capable of passing spheres of at least 3 inches (75 mm) in diameter. The pump's suction and discharge openings shall be at least 4 inches (100 mm) in diameter.

Provide dry-chamber-mounting, vacuum-primed, nonclog sewage pumps located in dry compartment above wet pit. Include ASTM A48M (ASTM A48), Class 25,

nonclog, cast iron impeller; mechanical or stuffing box seals; pedestal mounted motor; and suction piping extending to bottom of wet pit.

Suction-lift pumps shall be capable of automatic rapid self priming and re-priming at the "lead pump on" elevation. Suction piping shall not exceed 25 feet (7.6 meters) in total length. Priming lift at the “lead pump on” elevation shall include a safety factor of at least 4 feet (1.2 meters) from the maximum allowable priming lift for the specific equipment at design operating conditions. The combined total of dynamic suction-lift at the "pump off" elevation and the required net positive suction head at design operating conditions shall not exceed 22 feet (6.7 meters).

G302003 1.5 PUMP MOTOR

Provide pump motor sized to accommodate pump operation along the entire impeller curve.

G302003 1.6 STATION PIPING WITHIN WET WELL AND VALVE VAULT

G302003 1.6.1 Piping Less than 4-Inch (100 mm) in Diameter

a. PVC Pressure Pipe

1) Pipe: ASTM D 1785, Schedule 80.

2) Fittings: Schedule 80 socket fittings, ASTM D 2467; Schedule 80 threaded fittings, ASTM D 2464.

G302003 1.6.2 Piping 4 inch (100 mm) Diameter and Larger

a. Flanged Ductile Iron Pipe

1) Pipe: AWWA C115 and its appendices.

2) Fittings: AWWA C110 or AWWA C153.

3) Lining: AWWA C104.

G302003 1.7 FORCE MAINS

G302003 1.7.1 Force Mains for Submersible and Suction Lift Pumps

Force mains shall be at least 4 inches (100 mm) in diameter and shall be either ductile iron or PVC pressure pipe.

a. Ductile Iron Pressure Pipe

1) Pipe: AWWA C151, Pressure Class 350.

2) Fittings: AWWA C110 or AWWA C153.

3) Interior Lining: AWWA C104.

4) Exterior Protection (if required): AWWA C105,

polyethylene encasement.

b. PVC Pressure Pipe

1) Pipe: AWWA C900, Pressure Class 150.

2) Fittings: Ductile Iron (AWWA C110 or AWWA C153).

G302003 1.7.2 Force Mains for Grinder Pumps

Force mains less than 4 inches (100 mm) in diameter shall be PVC pressure pipe:

a. PVC Pressure Pipe

1) Pipe: ASTM D 1785, Schedule 40 or ASTM D 2241, with SDR rating for 160 psi (1.1 MPa) pressure rating.

2) Fittings: ASTM D 2466.

3) Joints: Elastomeric gaskets for pressure rating; solvent cement joints, ASTM D 2564.

G302003 1.8 PIPING ACCESSORIES

G302003 1.8.1 Insulating Joints

Provide between pipes of dissimilar metals a rubber gasket or other approved type of insulating joint or dielectric coupling to effectively prevent metal-to-metal contact between adjacent sections of piping.

G302003 1.8.2 Accessories

Provide flanges, connecting pieces, transition glands, transition sleeves, and other adapters as required.

G302003 1.8.3 Flexible Flanged Coupling

Provide flexible flanged coupling applicable for sewage as indicated. Use flexible flanged coupling designed for a working pressure of 350 psi (2400 kPa).

G302003 1.9 VALVES

Suitable shutoff and check valves shall be provided on the discharge line of each pump. Locate the check valve between the shutoff valve and the pump. Locate valves in accordance with state sewerage regulations. Check valves shall be suitable for the material being handled and placed on the horizontal portion of the discharge piping except for ball check valves, which may be placed in the vertical run. Valves shall be capable of withstanding normal pressure and water hammer. Use valves from one manufacturer.

G302003 1.9.1 Shut Off Valves

G302003 1.9.1.1 Shut Off Valves Less than 4 Inch (100 mm) in Diameter

PVC ball valves.

G302003 1.9.1.2 Shut Off Valves 4 Inch (100 mm) and Larger in Diameter

AWWA C509 or AWWA C515, nonrising stem, and flanged. Provide valves with handwheels that open by counterclockwise rotation of the valve stem. Provide epoxy coating in accordance with AWWA C550.

G302003 1.9.2 Check Valves

G302003 1.9.2.1 Check Valves Less than 4-Inch (100 mm) in Diameter

Neoprene ball check valve with integral hydraulic sealing flange, designed for a hydraulic working pressure of 175 psi (1200 kPa).

G302003 1.9.2.2 Check Valves 4-Inch (100 mm) and Larger in Diameter

AWWA C508, flanged. Provide a nonclog, swing check valve rated for not less than 175 psig (1200 kPa) working pressure capable of passing 3-inch (75 mm) diameter solids.

G302003 1.9.3 Air Relief Valves

Provide air relief valves at high points in the force main to prevent air locking in accordance with AWWA M51. Provide vacuum relief valves, where required, to relieve negative pressures on force mains.

G302003 1.10 IDENTIFICATION TAGS AND PLATES

Provide valves with tags or plates numbered and stamped for their usage. Use plates and tags of brass or nonferrous material and mounted or attached to the valve.

G302003 1.11 THRUST RESTRAINT

Provide thrust restraint for force mains, valves and other features of the wastewater distribution system.

a. Concrete Thrust Blocks: AWWA C600.
b. Restrained Joints: Pipe manufacturer's recommendations and required length of pipe to be restrained calculated in accordance with UFC 3-200-10N, *Civil Engineering*.

G302003 1.12 STATION CONTROL SYSTEM

G302003 1.12.1 Operating Controls

G302003 1.12.2 Alarm Controls

Provide alarms for all pumping and lift stations; at minimum provide alarms for high level, power failure, pump failure, unauthorized entry or any cause of station malfunction. Provide alarms as required by the pump manufacturer to obtain warranty.

G302003 1.12.3 Telemetry

If required, provide a telemetry system in accordance with state sewer collection and treatment regulations and system owner's requirements to relay alarms to a facility that is manned 24 hours a day.

G302003 1.13 UNDERGROUND ENCLOSURES

G302003 1.14 STATION ACCESSORIES

G302003 1.14.1 Ventilation

Covered wet wells shall have provisions for air displacement venting to the outside. Galvanized ASTM A 53/A 53M pipe with insect screening.

Provide adequate ventilation for all pump stations.

G302003 1.14.2 Metering

Provide devices for measuring wastewater flow at all pumping stations. Provide indicating, totalizing and recording flow measurement at pumping stations with a 1200 gpm (76 l/s) or greater design peak hourly flow. For smaller stations, provide elapsed time meters in conjunction with pumping rate tests.

G302003 1.14.3 Pipe and Valve Supports

Use schedule 40 galvanized steel piping conforming to ASTM A 53/A 53M for pipe and valve supports. Provide either ANSI B16.3 or ANSI B16.11 galvanized threaded fittings.

G302003 1.14.4 Miscellaneous Metals

Use stainless steel bolts, nuts, washers, anchors, and supports for installation of equipment.

G302004 PACKAGED SANITARY SEWER TREATMENT PLANTS

Provide packaged wastewater treatment facilities in accordance with UFC 3-200-10N, *Civil Engineering*, for pipeline materials and the state sewer collection and treatment regulations for treatment plant requirements.

G302005 SEPTIC TANKS

Provide septic tanks in accordance with the state and treatment regulations and the International Private Sewage Disposal Code 2000.

G302006 DRAIN FIELDS

Provide drain fields in accordance with the state and treatment regulations and the International Private Sewage Disposal Code 2000.

G302090 OTHER SANITARY SEWER

G302090 1.1 OIL/WATER SEPARATOR

Refer to G303090.

G3030 STORM SEWER

Provide all materials, equipment, labor, testing, and miscellaneous related items to provide storm drainage collection system necessary to drain the site. The storm sewer collection system shall be designed and constructed in accordance with UFC 3-200-10N, *Civil Engineering*; the utility provider's requirements; and the state stormwater management laws and regulations. Design project site to prevent stormwater runoff in excess of the capacity of the existing utility system.

G303001 STORM SEWER PIPING

G303001 1.1 PIPING

Storm sewer piping less than 12 inches (300 mm) in diameter shall be PVC or ductile iron. Storm sewer piping 12 inches (300 mm) and larger in diameter shall be reinforced concrete; Other piping materials may only be used when written approval is received by the Government's Civil Reviewer or indicated in another part of the RFP.

Subsurface drainage piping shall be perforated PVC or HDPE.

G303001 1.1.1 Materials

a. PVC Pipe

1) Piping and Fittings: ASTM D 3034, SDR 35.

2) Joints: ASTM D 3212 and ASTM F 477.

b. Ductile Iron Pipe

1) Piping: ASTM A 746. Provide required Thickness Class based on design information and methods in ASTM A 746.

2) Fittings: AWWA C110 or AWWA C153.

3) Joints: AWWA C111.

4) Interior Coating: AWWA C104.

5) Exterior Protection (if required): AWWA C105, polyethylene encasement.

c. Reinforced Concrete Pipe

1) Circular Pipe: ASTM C 76M (ASTM C 76). Provide required Class based on design information and methods in ASTM C 76M (ASTM C 76). Class III minimum.

2) Elliptical Pipe: ASTM C 507M (ASTM C 507). Provide required Class based on design information and methods in ASTM C 76M (ASTM C 76).

3) Joints:

a) ASTM C 990M (ASTM C 990) butyl gaskets;

b) ASTM C 443M (ASTM C 443) rubber O-ring joints; or

c) AASHTO M 198, Type B preformed plastic gaskets.

d. Corrugated Aluminum Pipe

1) Piping: ASTM B 745.

2) Joints: Coupling bands conforming to ASTM B 745.

3) Coating: Fully bituminous coated for all applications in accordance with ASTM A 849. For applications where piping is part of a piped storm sewer system (not a culvert), pipe shall be fully bituminous coated, invert (half) paved with concrete lining in accordance with ASTM A 849.

e. Corrugated Steel Pipe

1) Piping: ASTM A 760.

2) Joints: Coupling bands conforming to ASTM A 760.

3) Coating: Fully bituminous coated for all applications in accordance with ASTM A 849. For applications where piping is part of a piped storm sewer system (not a culvert), pipe shall be fully bituminous coated, invert (half) paved with concrete lining in accordance with ASTM A 849.

f. HDPE

1) Piping: AASHTO M 294 Type S, corrugated.

2) Joints: Soiltight.

g. Perforated PVC Pipe: ASTM D 2729.

h. Perforated HDPE Pipe

1) Piping and Fittings: AASHTO M 252, Type S, corrugated.

2) Joints: Soiltight.

G303001 1.1.2 Installation

Install piping in accordance with manufacturer’s recommendations.

a. PVC: ASTM D 2321. Do not use ASTM D 2321 Class IV or V materials for bedding, haunching or initial backfill materials.
b. Ductile Iron: AWWA C600.
c. Reinforced Concrete: ACPA 01-102 and 01-103.
d. Corrugated Aluminum: ASTM B 788.
e. Corrugated Steel: ASTM A 798.
f. HDPE: CPPA 100.
g. Perforated PVC and Perforated HDPE: ASTM D 2321. Do not use ASTM D 2321 Class IV or V materials for bedding, haunching or initial backfill materials.

G303001 1.2 PIPING FOR CLEANOUTS

G303001 1.2.1 Materials

a. Cast-Iron Soil Pipe for Cleanouts

1) Pipe: ASTM A 74, service.

2) Joints: ASTM C 564 compression-type rubber gaskets.

3) Exterior Protection (if required): AWWA C105, polyethylene encasement.

G303001 1.2.2 Installation

Install cast iron pipe and fittings in accordance with the recommendations of the pipe manufacturer.

G303002 STORM SEWER STRUCTURES

G303002 1.1 GENERAL REQUIREMENTS

Provide all materials, equipment, labor, testing, and miscellaneous related items for the drainage structures in accordance with the following:

a. Structure rim elevations shall be set flush with finished surface of paved areas or 1 inch (25 mm) above finished grade in unpaved areas.
b. Resilient connectors for making joints between manhole and pipes entering manhole shall conform to ASTM C 923M (ASTM C 923).
c. Provide precast or cast-in-place concrete drainage structures, except cast-in-place concrete is required for airfield drainage structures, headwalls and gutters.

G303002 1.2 PRECAST CONCRETE INLETS

Provide work and materials in accordance with applicable requirements of the State Highway Specifications (SHS) and standards where the project is located.

G303002 1.3 CAST-IN-PLACE CONCRETE DRAINAGE STRUCTURES

Provide work and materials in accordance with drainage structures indicated in the State Highway Specifications (SHS) and standards where the project

is located.

For airfield drainage structures, provide work and materials in accordance with FAA ACA 150/5370-10B.

G303002 1.4 DRAINAGE STRUCTURE FRAMES AND COVERS

FS A-A-60005; cast iron or ductile iron; designed to accommodate the traffic loadings. The word "Storm" shall be stamped or cast into covers so that it is plainly visible.

For airfield drainage structures, fabricate frames and covers of standard commercial grade steel welded by qualified welders in accordance with AWS D1.1/D1.1M. Covers shall be of rolled steel floor plate having an approved anti-slip surface. Steel frames and covers shall be hot dipped galvanized after fabrication. At the contractor's option, ductile iron covers and frames may be used for airfield drainage structures if designed for a minimum proof load of 100,000 pounds (45,000 kg) in lieu of the steel frames and covers. Covers shall be of the same material as the frames (i.e. ductile iron frame with ductile iron cover, galvanized steel frame with galvanized steel cover). Proof loading shall be performed in accordance with FS A-A-60005 and ASTM A 48/A 48M. Proof loads shall be physically stamped into the cover. Provide the Contracting Officer copies of previous proof load test results performed on the same frames and covers as proposed for this contract. The top of the structure shall be modified to accept the ductile iron structure in lieu of the steel structure indicated. The finished structure shall be level and non-rocking, with the top flush with the surrounding pavement.

G303002 1.5 DRAINAGE STRUCTURE STEPS

a. Zinc-coated steel: 29 CFR 1910.27.
b. Plastic or rubber coating pressure molded to steel: ASTM D 4101, copolymer polypropylene; or ASTM C 443M (ASTM C 443), except shore A durometer hardness shall be 70 plus or minus 5.

Aluminum steps or rungs will not be permitted.

Steps are not required in structures less than 4 feet (1.2 m) deep.

G303002 1.6 DRAINAGE STRUCTURE CONSTRUCTION

Where a new structure is constructed on an existing line, remove existing pipe as necessary to construct the structure. Cut existing pipe so that pipe ends are approximately flush with the interior face of structure wall, but not protruding into the structure.

G303002 1.7 CONNECTIONS TO EXISTING STRUCTURES

Pipe connections to existing structures shall be centered on the structure. Holes for the new pipe shall be of sufficient diameter to allow packing cement mortar around the entire periphery of the pipe but no larger than 1.5 times the diameter of the pipe. Cutting the structure shall be done in a manner that will cause the least damage to the walls.

G303002 1.8 CLEANOUTS

Construct cleanouts of cast iron soil pipe and fittings; see G303001, paragraph 1.2.

G303003 LIFT STATIONS

A stormwater pump station(s) will not be allowed.

G303004 CULVERTS

Culverts less than 12 inches (300 mm) in diameter shall be PVC or ductile iron. Culverts 12 inches (300 mm) and larger in diameter shall be reinforced concrete; other pipe materials may only be used when written approval is received by the Government's Civil Reviewer or indicated in another part of the RFP.

Flared end sections shall the same material as pipe material.

Provide erosion control riprap in accordance with the State Highway Specifications (SHS) and standards where the project is located.

See G303001, paragraphs 1.1.1 and 1.1.2 for material and installation requirements.

G303005 HEADWALLS

Provide cast-in-place concrete headwalls in accordance with the State Highway Specification (SHS) and standards where the project is located.

G303006 EROSION & SEDIMENT CONTROL MEASURES

Refer to Section G103011.

G303007 STORMWATER MANAGEMENT

G303007 1.1 STORMWATER COLLECTION AND STORAGE

Provide permanent detention/retention ponds and other drainage features to regulate stormwater runoff and to prevent damage to the site and off-site. Integrate permanent stormwater management ponds, swales, and other stormwater management features, into the total site design to provide an aesthetically pleasing and harmonious landscape. Develop and construct the ponds and other drainage features in accordance with UFC 3-200-10N, *Civil Engineering*, and the state stormwater management Laws and Regulations.

G303090 OTHER STORM SEWER

G303090 1.1 OIL/WATER SEPARATOR

Provide an oil/water separator to remove free oil from oil-in-water mixtures originating from proposed facility operations. Provide grit protection upstream of the oil/water separator.

The oil/water separator shall utilize coalescing media and conform to the

applicable guidelines of the American Petroleum Institute (API).

Provide materials or a coating system which will protect the separator from the oil-in-water mixture, atmosphere, and in-situ soil conditions.

Use a separator with a completely removable cover.

G3040 HEATING DISTRIBUTION

G304001 OVERHEAD HOT WATER SYSTEMS

G304001 1.1 PIPING & FITTINGS

Hot water piping shall be ASTM A 53, Type E (electric-resistance welded), Grade A or B), or Type S (seamless, Grade A or B); black steel, Weight Class XS (Extra Strong). ASTM A 106, Grade A or B, black steel, Schedule 80 may be used.

G304001 1.2 INSULATION

Mineral fiber, calcium silicate, or cellular glass pipe insulation with aluminum jacket which matches existing or surrounding insulation. Paint jacket to suit Base Architectural Plan. The minimum insulation thickness shall be in accordance with the following table:

Table 1 Insulation Thickness for Hot Water Systems

Nominal Pipe Diameterinches (mm)	Mineral Fiberinches (mm)	Calcium Silicateinches (mm)	Cellular Glassinches (mm)
1.00 (25)	1.5 (38)	1.5 (38)	1.5 (38)
1.5 (38)	1.5 (38)	1.5 (38)	1.5 (38)
2.0 (51)	1.5 (38)	1.5 (38)	1.5 (38)
2.5 (64)	1.5 (38)	1.5 (38)	1.5 (38)
3.0 (76)	1.5 (38)	1.5 (38)	1.5 (38)
4.0 (100)	2.0 (51)	2.5 (64)	1.5 (38)
5.0 (125)	2.0 (51)	2.5 (64)	1.5 (38)
6.0 (150)	2.5 (64)	2.5 (64)	1.5 (38)
8.0 (200)	2.5 (64)	2.5 (64)	1.5 (38)
10.0 (250)	2.5 (64)	2.5 (64)	1.5 (38)
12.0 (300)	2.5 (64)	2.5 (64)	1.5 (38)

14.0 (350)	2.5 (64)	2.5 (64)	1.5 (38)
16.0 (400)	2.5 (64)	2.5 (64)	1.5 (38)
18.0 (450)	2.5 (64)	2.5 (64)	1.5 (38)

G304001 1.3 EXPANSION

Compensate for piping expansion by utilizing expansion loops and joints. Provide guided slip or flexible ball type expansion joints.

G304001 1.4 SUPPORTS

MSS SP-58 and MSS SP-69, adjustable supports with insulation protection saddles. Provide stainless steel axles for rollers. Provide support poles with guy wires and hardware.

G304002 OVERHEAD STEAM SYSTEMS

G304002 1.1 PIPING & FITTINGS

G304002 1.1.1 Steam Piping

Steam piping shall be ASTM A 53, Type E (electric-resistance welded, Grade A or B) or Type S (seamless, Grade A or B), black steel. Provide Weight Class STD (Standard) for welding end connections. Provide Weight Class XS (Extra Strong) for threaded end connections. ASTM A 106, Grade A or B, black steel, Schedule 40 may be used for pipe sizes through 9 inches (250 mm), and minimum pipe wall thickness of 0.35 inches (9.5 mm) for pipe sizes 12 inches (300 mm) and larger for welding end connections. Provide Schedule 80 for threaded end connections.

G304002 1.1.2 Condensate Piping

Condensate piping shall be ASTM A 53, Type E (electric-resistance welded), Grade A or B), or Type S (seamless, Grade A or B); black steel, Weight Class XS (Extra Strong). ASTM A 106, Grade A or B, black steel, Schedule 80 may be used.

G304002 1.2 INSULATION

Fibrous glass, calcium silicate, or cellular glass pipe insulation with aluminum jacket which matches existing or surrounding insulation. Paint jacket to suit Base Architectural Plan. The minimum insulation thickness shall be in accordance with the following tables:

Table 1 Insulation Thickness for Steam Systems

Nominal Pipe Diameterinches (mm)	Fibrous Glassinches (mm)	Calcium Silicateinches (mm)	Cellular Glassinches (mm)

1.00 (25)	3.5 (90)	4.0 (100)	*
1.5 (38)	3.5 (90)	4.0 (100)	*
2.0 (51)	3.5 (90)	4.0 (100)	*
2.5 (64)	3.5 (90)	4.0 (100)	*
3.0 (76)	4.0 (100)	4.5 (115)	*
4.0 (100)	4.0 (100)	4.5 (115)	*
5.0 (125)	4.5 (115)	5.0 (125)	*
6.0 (150)	4.5 (115)	5.0 (125)	*
8.0 (200)	5.0 (125)	6.0 (150)	*
10.0 (250)	5.0 (125)	6.0 (150)	*
12.0 (300)	5.0 (125)	6.0 (150)	*
14.0 (350)	5.0 (125)	6.0 (150)	*
16.0 (400)	5.0 (125)	6.0 (150)	*
18.0 (450)	5.0 (125)	6.0 (150)	*

* Cellular glass pipe insulation having an insulating efficiency not less than that of the specified thickness of calcium silicate may be provided.

Table 2 Insulation Thickness for Condensate Systems

Nominal Pipe Diameterinches (mm)	Mineral Fiberinches (mm)	Fibrous Glassinches (mm)
1.00 (25)	2.5 (64)	*
1.5 (38)	2.5 (64)	*
2.0 (51)	2.5 (64)	*
2.5 (64)	2.5 (64)	*
3.0 (76)	3.0 (76)	*
4.0 (100)	3.0 (76)	*
5.0 (125)	3.5 (90)	*

6.0 (150)	3.5 (90)	*
8.0 (200)	3.5 (90)	*
10.0 (250)	3.5 (90)	*
12.0 (300)	3.5 (90)	*
14.0 (350)	3.5 (90)	*
16.0 (400)	3.5 (90)	*
18.0 (450)	3.5 (90)	*

* Fibrous glass pipe insulation having an insulating efficiency not less than that of the specified thickness of mineral fiber may be provided.

G304002 1.3 EXPANSION

Compensate for piping expansion by utilizing expansion loops and joints. Provide guided slip or flexible ball type expansion joints.

G304002 1.4 SUPPORTS

MSS SP-58 and MSS SP-69, adjustable supports with insulation protection saddles. Provide stainless steel axles for rollers. Provide support poles with guy wires and hardware.

G304003 UNDERGROUND HOT WATER SYSTEMS

G304003 1.1 PIPING & FITTINGS

Direct buried, factory pre-fabricated, pre-insulated, piping systems shall consist of a service pipe with polyurethane insulation and a high-density polyethylene (HDPE) jacket. Provide factory fabricated fittings and components. Field insulation of fittings will not be allowed.

G304003 1.2 INSULATION

The minimum insulation thickness shall be in accordance with the following tables:

Table 1 Insulation Thickness for Drainable/Dryable Systems

Nominal Pipe Diameterinches (mm)	Parocinches (mm)	Epitherminches (mm)	Kaylo-10 Thermo-12 Super Caltempinches (mm)
1.00 (25)	2.0 (51)	2.5 (64)	4.0 (100)

1.5 (38)	2.0 (51)	2.5 (64)	4.0 (100)
2.0 (51)	2.5 (64)	3.5 (90)	4.5 (115)
2.5 (64)	2.5 (64)	3.5 (90)	4.5 (115)
3.0 (76)	3.0 (76)	4.0 (100)	5.0 (125)
4.0 (100)	3.0 (76)	4.0 (100)	5.0 (125)
5.0 (125)	3.0 (76)	4.0 (100)	5.0 (125)
6.0 (150)	3.5 (90)	4.5 (115)	5.5 (140)
8.0 (200)	3.5 (90)	4.5 (115)	5.5 (140)
10.0 (250)	4.0 (100)	5.0 (125)	6.0 (150)
12.0 (300)	4.0 (100)	5.0 (125)	6.0 (150)
14.0 (350)	4.0 (100)	5.0 (125)	6.0 (150)
16.0 (400)	4.0 (100)	5.0 (125)	6.0 (150)
18.0 (450)	4.0 (100)	5.0 (125)	6.0 (150)

Table 2 Insulation Thickness for Water Spread Limiting Systems

Nominal Pipe Diameterinches (mm)	Calcium Silicateinches (mm)	Polyurethaneinches (mm)
1.00 (25)	N/A	N/A
1.5 (38)	N/A	N/A
2.0 (51)	N/A	N/A
2.5 (64)	N/A	N/A
3.0 (76)	1.00 (25)	1.23 (31)
4.0 (100)	1.00 (25)	1.23 (31)
5.0 (125)	N/A	N/A
6.0 (150)	1.5 (38)	1.34 (34)
8.0 (200)	2.0 (51)	1.21 (30)
10.0 (250)	2.5 (64)	1.31 (33)

12.0 (300)	2.0 (51)	1.29 (33)
14.0 (350)	N/A	N/A
16.0 (400)	N/A	N/A
18.0 (450)	N/A	N/A

G304003 1.3 UHDS DESIGN

Design and provide direct buried, factory-prefabricated, pre-insulated main hot water piping, including piping in manholes. Asbestos cement or plastic conduit is not acceptable. The UHDS representative shall be certified in writing by the UHDS manufacturer to be technically qualified and experienced in the installation of the system. Provide a Certificate of Satisfactory Operation certifying that at least 3 systems installed by the UHDS manufacturer within the previous 10 years have and are operating satisfactorily for not less than 5 years. The certificate shall include verification information.

G304003 1.4 VALVING

Provide isolation valves on supply and return lines at take-offs for service to each building. Valves shall be located in valve boxes. Valves shall be ASME class 150.

G304003 1.5 EXPANSION

Compensate for piping expansion by utilizing expansion loops.

G304004 UNDERGROUND STEAM DISTRIBUTION SYSTEMS

G304004 1.1 PIPING & FITTINGS

Direct buried, factory pre-fabricated, pre-insulated, steam and condensate piping systems shall consist of a steel service pipe with polyurethane insulation and a high-density polyethylene (HDPE) jacket. Provide factory fabricated fittings and components. Field insulation of fittings will not be allowed.

G304004 1.2 INSULATION

The minimum insulation thickness shall be in accordance with the following tables:

Table 1 Insulation Thickness for Drainable/Dryable Systems

Nominal Pipe Diameterinches (mm)	Parocinches (mm)	Epitherminches (mm)	Kaylo-10 Thermo-12 Super Caltempinches (mm)

1.00 (25)	2.0 (51)	2.5 (64)	4.0 (100)
1.5 (38)	2.0 (51)	2.5 (64)	4.0 (100)
2.0 (51)	2.5 (64)	3.5 (90)	4.5 (115)
2.5 (64)	2.5 (64)	3.5 (90)	4.5 (115)
3.0 (76)	3.0 (76)	4.0 (100)	5.0 (125)
4.0 (100)	3.0 (76)	4.0 (100)	5.0 (125)
5.0 (125)	3.0 (76)	4.0 (100)	5.0 (125)
6.0 (150)	3.5 (90)	4.5 (115)	5.5 (140)
8.0 (200)	3.5 (90)	4.5 (115)	5.5 (140)
10.0 (250)	4.0 (100)	5.0 (125)	6.0 (150)
12.0 (300)	4.0 (100)	5.0 (125)	6.0 (150)
14.0 (350)	4.0 (100)	5.0 (125)	6.0 (150)
16.0 (400)	4.0 (100)	5.0 (125)	6.0 (150)
18.0 (450)	4.0 (100)	5.0 (125)	6.0 (150)

Table 2 Insulation Thickness for Water Spread Limiting Systems

Nominal Pipe Diameterinches (mm)	Calcium Silicateinches (mm)	Polyurethaneinches (mm)
1.00 (25)	N/A	N/A
1.5 (38)	N/A	N/A
2.0 (51)	N/A	N/A
2.5 (64)	N/A	N/A
3.0 (76)	1.00 (25)	1.23 (31)
4.0 (100)	1.00 (25)	1.23 (31)
5.0 (125)	N/A	N/A
6.0 (150)	1.5 (38)	1.34 (34)
8.0 (200)	2.0 (51)	1.21 (30)

10.0 (250)	2.5 (64)	1.31 (33)
12.0 (300)	2.0 (51)	1.29 (33)
14.0 (350)	N/A	N/A
16.0 (400)	N/A	N/A
18.0 (450)	N/A	N/A

Table 3 Insulation Thickness for Condensate Return Systems

Nominal Pipe Diameterinches (mm)	Parocinches (mm)	Epitherminches (mm)	Kaylo-10 Thermo-12 Super Caltempinches (mm)
1.00 (25)	2.0 (51)	2.5 (64)	4.0 (100)
1.5 (38)	2.0 (51)	2.5 (64)	4.0 (100)
2.0 (51)	2.5 (64)	3.5 (90)	4.5 (115)
2.5 (64)	2.5 (64)	3.5 (90)	4.5 (115)
3.0 (76)	3.0 (76)	4.0 (100)	5.0 (125)
4.0 (100)	3.0 (76)	4.0 (100)	5.0 (125)
5.0 (125)	3.0 (76)	4.0 (100)	5.0 (125)
6.0 (150)	3.5 (90)	4.5 (115)	5.5 (140)
8.0 (200)	3.5 (90)	4.5 (115)	5.5 (140)
10.0 (250)	4.0 (100)	5.0 (125)	6.0 (150)
12.0 (300)	4.0 (100)	5.0 (125)	6.0 (150)
14.0 (350)	4.0 (100)	5.0 (125)	6.0 (150)
16.0 (400)	4.0 (100)	5.0 (125)	6.0 (150)
18.0 (450)	4.0 (100)	5.0 (125)	6.0 (150)

G304004 1.3 UHDS DESIGN

Design and provide direct buried, factory-prefabricated, pre-insulated main steam and condensate piping in separate conduits and including piping in

manholes. Asbestos cement or plastic conduit is not acceptable. The UHDS representative shall be certified in writing by the UHDS manufacturer to be technically qualified and experienced in the installation of the system. Provide a Certificate of Satisfactory Operation certifying that at least 3 systems installed by the UHDS manufacturer within the previous 10 years have and are operating satisfactorily for not less than 5 years. The certificate shall include verification information.

G304004 1.4 VALVING

Provide isolation valves on supply and return lines at take-offs for service to each building. Valves shall be located in manholes. Valves shall be ASME class 150.

G304004 1.5 EXPANSION

Compensate for piping expansion by utilizing expansion loops. Locate anchors outside manholes.

G304005 REINFORCED CONCRETE MANHOLES & VALVE BOXES

G304005 1.1 MANHOLE CONSTRUCTION

Manholes shall be shall be constructed of reinforced, 3000 psi (206.8 bar) concrete and shall extend a minimum of 6 inches (300 mm) above grade. Depth shall be as required to maintain proper pipe slopes. Construct manhole floor and sides in one monolithic pour. Provide galvanized steel or sectioned aluminum, open grate or solid cover as indicated in ESR Section G30. Provide ventilation openings for solid cover. Provide ladder. Ladder shall be steel with non-slip surfaces and anchored to the wall. Manhole floor and walls shall be watertight. Provide sleeves or core drill openings for pipes with modular mechanical seals. Provide sump pit for pump.

G304005 1.2 VALVE BOX CONSTRUCTION

Cast-iron or ductile-iron box of a suitable size. Provide cast-iron or ductile-iron cover for the box with word(s) describing the utility cast on the cover.

G304005 1.3 MANHOLE SUMP PUMPS

Vertical sump pump. Operating temperature design must be 195 degrees F (93 degrees C) minimum. Provide with 2-pole float control.

G304090 OTHER HEATING DISTRIBUTION

G304090 1.1 WARNING & IDENTIFICATION TAPE

Polyethylene plastic tape manufactured specifically for warning and identifying buried utility lines.

G304090 1.2 CORROSION PROTECTION

Provide a cathodic protection system for the underground piping system. System shall be designed by a National Association of Corrosion Engineers (NACE) certified Cathodic Protection Engineer. The corrosion engineer shall obtain soil data and existing system conditions. Corrosion engineer shall supervise, inspect and test the installation and performance of the cathodic protection system. Test stations shall be post mounted and placed at the manhole or nearby building. Test stations shall be located at each end of each cathodically protected section.

G3050 COOLING DISTRIBUTION

G305001 OVERHEAD COOLING SYSTEMS

G305001 1.1 PIPING & FITTINGS

G305001 1.1.1 Chilled and Condenser Water Piping

Chilled and condenser water piping shall be electric resistance welded or seamless Schedule 40 black steel pipe conforming to ASTM A 53. Piping 4 inch (100 mm) and smaller may be ASTM B 88 Type K or L copper.

G305001 1.1.2 Steel Pipe Fittings

For piping 2 inch (50 mm) and smaller, provide ANSI/ASME B16.3 malleable iron screwed fittings or ASME B16.11 socket welding (Class 3000) or threaded type (Class 2000). Provide ASME/ANSI B16.9 butt-welding fittings or ASME/ANSI B16.5 flanged type for piping 2-1/2 inch (63 mm) and larger. Grooved joint pipe coupling systems of appropriate pressure rating are acceptable in lieu of welded or screwed fittings.

G305001 1.1.3 Copper Fittings

Provide ANSI B16.18 cast bronze solder joint type or ASME/ANSI B16.22 wrought copper solder joint type.

G305001 1.2 INSULATION

Mineral fiber, Urethane, cellular glass, Faced Phenolic Foam, or Flexible Cellular pipe insulation with aluminum jacket in accordance with ESR Section G30. The minimum insulation thickness shall be in accordance with the following table:

Table 1 Insulation Thickness for Cold Water Systems

Nominal Pipe Diameterinches (mm)	Mineral Fiberinches (mm)	Urethaneinches (mm)	Cellular Glassinches (mm)	Faced Phenolic Foaminches (mm)	Flexible Cellularinches (mm)
1.00 (25)	1.00 (25)	0.75 (19)	1.5 (38)	1.00 (25)	0.75 (19)
1.5 (38)	1.00 (25)	0.75 (19)	1.5 (38)	1.00 (25)	0.75 (19)

2.0 (51)	1.00 (25)	0.75 (19)	1.5 (38)	1.00 (25)	0.75 (19)
2.5 (64)	1.00 (25)	0.75 (19)	1.5 (38)	1.00 (25)	0.75 (19)
3.0 (76)	1.00 (25)	0.75 (19)	1.5 (38)	1.00 (25)	0.75 (19)
4.0 (100)	1.5 (38)	0.75 (19)	1.5 (38)	1.00 (25)	0.75 (19)
5.0 (125)	1.5 (38)	0.75 (19)	1.5 (38)	1.00 (25)	0.75 (19)
6.0 (150)	1.5 (38)	1.00 (25)	1.5 (38)	1.5 (38)	1.00 (25)
8.0 (200)	1.5 (38)	1.00 (25)	1.5 (38)	1.5 (38)	1.00 (25)
10.0 (250)	1.5 (38)	1.00 (25)	1.5 (38)	1.5 (38)	1.00 (25)
12.0 (300)	1.5 (38)	1.00 (25)	1.5 (38)	1.5 (38)	1.00 (25)
14.0 (350)	1.5 (38)	1.00 (25)	1.5 (38)	1.5 (38)	1.00 (25)
16.0 (400)	1.5 (38)	1.00 (25)	1.5 (38)	1.5 (38)	1.00 (25)
18.0 (450)	1.5 (38)	1.00 (25)	1.5 (38)	1.5 (38)	1.00 (25)

G305001 1.3 SUPPORTS

Provide MSS SP-58 and MSS SP-69, adjustable supports with insulation protection saddles. Provide stainless steel axles for rollers. Provide support poles with guy wires and hardware.

G305001 1.4 EXPANSION

Compensate for piping expansion by utilizing expansion loops and joints. Provide guided slip or flexible ball type expansion joints.

G305002 UNDERGROUND COOLING SYSTEMS

G305002 1.1 PIPING & FITTINGS

Direct buried, factory-prefabricated, pre-insulated, chilled water piping systems. All fittings and accessories shall be designed and factory-fabricated to prevent moisture from entering into the system. Backfill and overall installation shall meet the requirements of the piping system manufacturer.

G305002 1.2 VALVES

Provide isolation valves on supply and return lines at take-offs for service to each building. Valves shall be located in valve boxes.

G305090 OTHER COOLING DISTRIBUTION

G305090 1.1 EXPANSION

Compensate for piping expansion by utilizing expansion loops. Locate anchors outside manholes.

G305090 1.2 WARNING & IDENTIFICATION TAPE

Polyethylene plastic tape manufactured specifically for warning and identifying buried utility lines.

G305090 1.3 CORROSION PROTECTION

Provide a cathodic protection system for the underground chilled water and condenser water piping system. System shall be designed by a National Association of Corrosion Engineers (NACE) certified Cathodic Protection Engineer. The corrosion engineer shall obtain soil data and existing system conditions. Corrosion engineer shall supervise, inspect and test the installation and performance of the cathodic protection system. Test stations shall be post mounted and placed at the manhole or nearby building. Test stations shall be located at each end of each cathodically protected section.

G3060 FUEL DISTRIBUTION

G306001 LIQUID FUEL DISTRIBUTION PIPING

G306001 1.1 GASOLINE/DIESEL

Fuel piping shall be ASTM A 53, Type E (electric-resistance welded, Grade A or B) or Type S (seamless, Grade A or B), black steel or API SPEC 5L, seamless, submerged-arc weld or gas metal-arc weld, Grade B, black steel. Provide Weight Class STD (Standard) for welding end connections. Provide Weight Class XS (Extra Strong) for threaded end connections.

G306003 LIQUID FUEL STORAGE TANKS

G306003 1.1 STORAGE TANKS

Aboveground, concrete encased or double wall in accordance with UL 142 and UL 2085 with secondary containment and leak monitoring with a capacity to meet the system requirements. Provide with overfill/spill containment, overfill protection and vents.

G306003 1.2 FUEL PUMPS

Fuel pumps shall comply with NEMA MG 1, NFPA 70, and be designed for use with hydrocarbon fuels and working pressure of 275 psig (1896 kilopascals) at 100 degrees F (38 degrees C).

G306003 1.3 FUEL METERS

Continuous duty, positive displacement type, with electronic thermal compensation capability, suitable for outdoor installation, and designed for use with hydrocarbon fuels and working pressure of 275 psig (1896

THIS PAGE HAS BEEN INTENTIONALLY LEFT BLANK

SECTION G40

SITE ELECTRICAL UTILITIES
11/10

G40 GENERAL

RFP Part 3 including the Engineering System Requirements (ESR) provide project specific requirements. The RFP Part 4, Performance Technical Sections (PTS) provide generalized technical requirements that apply to multiple facility types and include more requirements than are applicable to any one project. Therefore, only the RFP Part 4 requirements that apply to the project and further define the RFP Part 3 project specific requirements are required.

G40 1.1 NARRATIVE

This section covers installations exterior to the facility up to the five foot line. See PTS Section D50, *Electrical*, for continuation of systems into the building.

G40 1.2 ELECTRICAL DESIGN GUIDANCE

Provide the design and installation in accordance with the following references. This Performance Technical Specification (PTS) adds clarification to the fundamental requirements contained in the following Government Standards. The general requirements of this PTS section are located in PTS Section Z10, *General Performance Technical Specification*.

When all product Quality Control information is included in the Unified Facility Criteria (UFC) and there are requirement options identified in the ESR, then the Uniformat Level 4 titles (and possible subtitles) are included without additional verbiage. One example of this is G401008, GROUNDING SYSTEMS.

G40 1.2.1 Government Standards

UNIFIED FACILITIES CRITERIA (UFC)

UFC 1-200-01	General Building Requirements(A reference in this PTS section to UFC 1-200-01 requires compliance with the Tri-Service Core UFCs that are listed in UFGS Section 01 33 10.05 20, which includes the following significant UFC(s):UFC 3-501-01, Electrical Engineering)
UFC 3-570-02N	Electrical Engineering Cathodic Protection

UNIFIED FACILITIES GUIDE SPECIFICATIONS (UFGS)

UFGS 26 11 13.00 20	Primary Unit Substation

UFGS 26 11 16	Secondary Unit Substations
UFGS 26 12 19.10	Three-Phase Pad-Mounted Transformers
UFGS 26 12 19.20	Single-Phase Pad-Mounted Transformers
UFGS 26 13 00.00 20	SF6 Insulated Pad-Mounted Switchgear
UFGS 26 23 00	Switchboards and Switchgear
UFGS 33 71 01.00 20	Overhead Transmission and Distribution

G40 1.3 QUALITY ASSURANCE

Qualifications, certifications, and Test Plans indicated herein shall be submitted 45 calendar days prior to the expected date of execution. Notify the Contracting Officer 14 calendar days prior to all testing. Submit test results within 7 calendar days of completion of testing.

The Designer of Record is responsible for approving the submittals listed below.

G40 1.3.1 Qualified Testing Organization

Contractor shall engage the services of a qualified testing organization to provide inspection, testing, calibration, and adjustment of the electrical distribution system and equipment listed in paragraph entitled "Acceptance Tests and Inspections" herein. Organization shall be independent of the supplier, manufacturer, and installer of the equipment. The organization shall be a first tier subcontractor.

a. Submit name and qualifications of organization. Organization shall have been regularly engaged in the testing of electrical materials, devices, installations, and systems for a minimum of 5 years. The organization shall have a calibration program, and test instruments used shall be calibrated in accordance with NETA ATS.
b. Submit name and qualifications of the lead engineering technician performing the required testing services. Include a list of three comparable jobs performed by the technician with specific names and telephone numbers for reference. Testing, inspection, calibration, and adjustments shall be performed by an engineering technician, certified by NETA or the National Institute for Certification in Engineering Technologies (NICET) with a minimum of 5 years' experience inspecting, testing, and calibrating electrical distribution and generation equipment, systems, and devices.

G40 1.3.2 NEC Qualified Worker

Provide in accordance with NFPA 70. Qualified Workers shall be allowed to be assisted by helpers on a 1 to 1 ratio, provided such helpers are registered in recognized apprenticeship programs. Submit a certification confirming NEC Qualified Worker requirements.

G40 1.3.3 Qualified Medium Voltage Electrician

All workers on medium voltage electrical crews shall have 5 years experience working medium voltage systems on similar projects involving the same or higher voltage.

G40 1.3.4 Qualified Cable Splicer (Medium Voltage Cable)

The cable splicer/terminator must have a certification from the National Cable Splicing Certification Board (NCSCB) in the field of splicing and terminating shielded medium voltage (5 kV to 35 kV) power cable using pre-manufactured kits (pre-molded, heat-shrink, cold-shrink). Proof of certification for the individuals that will be performing cable splicer and termination work shall be submitted 30 days before splices or terminations are to be made.

G40 1.3.5 Qualified Cable Splicer (Telecommunications)

Certification shall include the training, and experience of the individual on specific type and classification of telecommunications cable to be provided under this contract.

G40 1.3.6 Qualified Cable Installer and Splicer (Fiber Optic Cable)

Certification shall include the training, and experience of the individual on specific type and classification of Fiber Optic media to be provided under this contract.

G40 1.3.7 Qualified Fiber Optic (FO) Cable Manufacturer

The FO media manufacturer shall have a minimum of 3 years experience in the manufacturing, assembly, and factory testing of FO media that complies with RUS REA Bull 1753F-601 (PE-90). Manufacturer shall provide a list of customers with 3 years of maintenance logs documenting experience with government customers.

G40 1.3.8 Material Standards

Ensure service support and provide manufacturer's nameplate in accordance with PTS Section Z10, *General Performance Technical Specification*.

G40 1.3.8.1 Warning Labels

Each enclosure of electrical equipment, including substations, pad-mounted transformers, pad-mounted switches, pad-mounted sectionalizing termination cabinets, and switchgear, shall have a warning label identifying the enclosure as 1) containing energized electrical equipment and 2) an arc flash hazard.

G40 1.3.9 Factory Testing

The Government reserves the right to witness all factory testing. The manufacturer shall have a calibration program that assures that all applicable test instruments are maintained within rated accuracy.

G40 1.3.10 Electrical System Startup and Testing

Submit test plans for approval. The test plans shall be tailored to the systems provided.

The test plan shall list make and model and provide functional description of the test instruments and accessories and shall describe the setup of the tests to be conducted. Test instruments shall be capable of measuring and recording or displaying test data at a higher resolution and greater accuracy than specified for the equipment's performance.

G40 1.3.10.1 Factory Trained Engineer

Provide a factory trained engineer to supervise start-up and testing as required in referenced specifications.

G40 1.3.10.2 Performance Verification Testing

The Contractor shall show by demonstration in service that all circuits and devices are in operating condition. Tests shall be such that each item of control equipment will function not less than five times. The Contractor shall provide all necessary test equipment, tools, fuel, load banks, labor, and materials for testing. As a minimum, all systems shall be tested in accordance with manufacturer's recommendations. Additional testing requirements for the various systems are described with those systems, hereinafter. The Contractor shall assure that all applicable test instruments are maintained within rated accuracy. Dated calibration labels shall be visible on all test equipment.

Submit a separate electrical field test plan in accordance with manufacturer's recommendations and that conforms to NETA ATS for each piece of Electrical Distribution Equipment and System requiring Performance Verification Testing.

The following items identify specific test requirements. Additional test requirements are contained in the applicable UFGS.

a. Cable – Test cable in accordance with the manufacturer's recommendations and NETA ATS. Adhere to precautions and limits as specified in the applicable NEMA/ICEA Standard for the specific cable.
b. Grounding - Test ground systems in accordance with the manufacturer's recommendations and NETA ATS.
c. Site Lighting - Contractor's Quality Control (CQC) representative shall perform a field survey of site lighting systems in accordance with IESNA for acceptance. Show that the lighting system operates in accordance with

the user’s requirements and is in accordance with designed levels. Provide certification that the measured lighting levels conform to the design requirements.

d. Telecommunications wiring - Test all cables in accordance with industry standards.

G40 1.3.10.3 Acceptance Tests and Inspections

The Qualified Testing Organization shall provide the Acceptance Tests and Inspections test plan and procedures and perform the acceptance tests and inspections. Test methods, procedures, and test values shall be performed and evaluated in accordance with NETA ATS, the manufacturer's recommendations, and paragraph entitled "Field Quality Control" of each applicable specification section. Tests identified as optional in NETA ATS are not required unless otherwise specified. Equipment shall be placed in service only after completion of required tests and evaluation of the test results have been completed. Contractor shall supply to the testing organization complete sets of shop drawings, settings of adjustable devices, and other information necessary for an accurate test and inspection of the system prior to the performance of any final testing.

Specific test requirements are contained in the UFGS for equipment.

G40 1.4 DESIGN SUBMITTALS

Design Submittals shall be in accordance with PTS Section Z10, *General Performance Technical Specifications*, UFGS Section 01 33 10.05 20, *Design Submittal Procedures*, UFC 1-300-09N, *Design Procedures*, and UFC 3-501-01, *Electrical Engineering*.

In addition, UFGS sections listed below or in the body of the PTS text are to be used by the Designer of Record (DOR) as a part of the design submittal. If the UFGS products or systems are applicable to the project, the DOR shall edit these referenced UFGS sections and submit them as a part of the design submittal specification. Edit the specification sections in accordance with the limitations stated in PTS Section Z10, *General Performance Technical Specifications*.

UFGS 26 11 13.00 20, *Primary Unit Substation*

UFGS 26 11 16, *Secondary Unit Substations*

UFGS 26 12 19.10, *Three-Phase Pad-Mounted Transformers*

UFGS 26 12 19.20, *Single-Phase Pad-Mounted Transformers*

UFGS 26 13 00.00 20, *SF6 Insulated Pad-Mounted Switch Gear*

UFGS 26 23 00, *Switchboards and Switchgear*

UFGS 33 71 01.00 20, *Overhead Transmission and Distribution*

G40 1.5 CONSTRUCTION SUBMITTALS

Submit construction submittals in accordance with PTS Section Z10, *General Performance Technical Specifications*. In addition to the PTS Section Z10 requirements, the Designer of Record (DOR) shall approve the following construction submittals as a minimum:

OMSI Information for Electrical Equipment (if OMSI Manual for the entire project is not already required); all "G" item submittals listed in the submittals of the specifications sections identified in the Design Submittals paragraph above; and all "G" item submittals listed in Government Surveillance UFGS Section 01 33 00.05 20, *Construction Submittal Procedures*.

Provide certification that all adjustable protective device settings have been set in accordance with the coordination study for the as-built equipment and configuration.

G4010 ELECTRICAL DISTRIBUTION

G401001 SUBSTATIONS

When secondary unit substations are required, the Designer of Record shall utilize UFGS Section 26 11 16, *Secondary Unit Substation*, and UFGS Section 26 23 00, *Switchboards and Switchgear*, for the project specification, and shall submit the edited specification section as a part of the design submittal for the project.

G401002 TRANSFORMERS

When transformers are required, the Designer of Record shall utilize UFGS Section 26 12 19.10, *Three-Phase Pad Mounted Transformers*, UFGS Section 26 12 19.20, *Single-Phase Pad Mounted Transformers*, or UFGS Section 33 71 01.00 20, *Overhead Transmission and Distribution*, for the project specification, and shall submit the edited specification section as a part of the design submittal for the project.

G401003 SWITCHES, CONTROLS AND DEVICES

When switches or control devices are required, the Designer of Record shall utilize UFGS Section 26 13 00.00 20, *SF6 Insulated Pad Mounted Switchgear*, or UFGS Section 33 71 01.00 20, *Overhead Transmission and Distribution*, for the project specification, and shall submit the edited specification section as a part of the design submittal for the project.

G401004 OVERHEAD ELECTRIC CONDUCTORS

Power line conductors shall be strung in accordance with manufacturer's standard sag and tension recommendations.

G401005 TOWERS, POLES, CROSSARMS AND INSULATORS

Wood poles shall comply with ANSI 05.1 and RUS 1728F-700. Pressure treat poles in accordance with AWPA C1 and AWPA C4 as referenced in RUS 1728F-700. The quality of each pole shall be ensured with "WQC" (wood quality control) brand on each piece or by an approved inspection agency report. Do not use creosote treated poles, lodgepole pine, and western larch pine poles.

Concrete poles shall comply with ANSI loadings for distribution poles.

The size of poles required, class, height and other data, shall be determined by the designer of record to meet requirements of the pole line. Crossarms shall be wood, steel or fiberglass in accordance with industry and local standards. Insulators, cutouts and associated equipment shall be determined by the Designer of Record to meet system requirements.

G401006 UNDERGROUND ELECTRIC CONDUCTORS

Route underground cables to minimize splices. Cable pulling tensions shall not exceed the maximum pulling tension recommended by the cable manufacturer. Medium voltage cable termination shall be suitable for the location installed and meet IEEE Std. 48 Class 1 requirements.

G401007 DUCTBANKS, MANHOLES, HANDHOLES AND RACEWAYS

Concrete manholes and handholes shall be standard type pre-cast concrete. Composite/Fiberglass handholes shall be polymer concrete reinforced with a heavy weave fiberglass reinforcing as indicated. Load ratings of manholes and handholes shall be suitable for the location installed.

G401008 GROUNDING SYSTEMS

G401009 METERING

G401010 CATHODIC PROTECTION SYSTEMS

Cathodic protection systems shall be in accordance with UFC 3-570-02N.

G401011 EQUIPMENT REQUIREMENTS FOR COASTAL AND HIGH HUMIDITY AREAS

G4020 SITE LIGHTING

G402001 EXTERIOR LIGHTING FIXTURES AND CONTROLS

Maintained mean area lighting levels shall be 6 lux (0.5 fc). Lighting uniformity shall be maintained with the following average to minimum (avg/min) uniformity ratios:

a. Highway Lighting, 3:1
b. Secondary Street Lighting, 6:1
c. Residential Streets, 6:1
d. Area And Parking Lighting, 6:1

G402002 SPECIAL SECURITY LIGHTING SYSTEM

G402003 OTHER AREA LIGHTING

G402004 LIGHTING POLES

Poles shall meet Uniform Building Code for street lighting poles, and AASHTO loadings for highway and sports lighting poles taking into account the effective projected areas of the luminaries provided. Poles shall be direct set or anchor-base type designed for use with underground supply conductors.

G402005 UNDERGROUND ELECTRIC CONDUCTORS

Provide in accordance with Paragraph G401006.

G402006 DUCTBANKS, MANHOLES AND HANDHOLES

Handholes and underground conduits for site lighting shall be in accordance with Paragraph G401007.

G402007 GROUNDING SYSTEMS

G4030 SITE COMMUNICATION AND SECURITY

G403001 TELECOMMUNICATIONS SYSTEMS

G403002 CABLE TV SYSTEMS (CATV)

G403003 CABLES AND WIRING

Provide underground copper cable pair in accordance with RUS 345-67. Provide aerial cable in accordance with RUS 345-67 except that it shall be suitable for aerial installation and shall be Figure 8 distribution wire with 6,000 pound (26,700 N) Class A galvanized steel or 6,000 pound (26,700 N) aluminum-clad steel strand. Screen-compartmental core cable shall be filled cable meeting the requirements of RUS 345-67. Fiber optic media shall meet all performance requirements of EIA/TIA-568-A and the physical requirements of ICEA S 87-640 and EIA/TIA-598-A.

G403004 DUCTBANKS, MANHOLES AND HANDHOLES

Provide in accordance with paragraph G401007.

G403005 TOWERS, POLES AND STANDS

Provide in accordance with paragraph G401005.

G403006 TV CAMERAS AND MONITORS

G403007 ELECTRONIC SECURITY SYSTEM (ESS)

G403008 OTHER COMMUNICATION AND ALARM

G403009 GROUNDING SYSTEMS

G4090 OTHER ELECTRICAL UTILITIES

--End of Section--

SECTION Z10

GENERAL PERFORMANCE TECHNICAL SPECIFICATION
11/10

Z10 GENERAL

RFP Part 3 including the Engineering System Requirements (ESR) provide project specific requirements. The RFP Part 4, Performance Technical Sections (PTS) provide generalized technical requirements that apply to multiple facility types and include more requirements than are applicable to any one project. Therefore, only the RFP Part 4 requirements that apply to the project and further define the RFP Part 3 project specific requirements are required.

Z10 1.1 NARRATIVE

All Performance Technical Specification (PTS) sections must be used in conjunction with all parts of the Design Build (D/B) Request for Proposal (RFP) to determine the full requirements of this solicitation. This PTS section provides general requirements for the other PTS sections of this RFP and is used in conjunction with the other PTS sections.

Refer to UFGS section 01 33 10.05 20, *Design Submittal Procedures*for the Order of Precedence of the RFP Parts. Requirements listed in the Project Program take precedence over the PTS sections requirements; therefore, requirements identified in the Project Program eliminate options related to that requirement in the PTS sections.

Z10 1.2 DESIGN GUIDANCE

Provide work in compliance with the following design standards and codes, as a minimum. Government standards listed in this RFP take precedence over industry standards.

The PTS Sections reference published standards, the titles of which can be found in the *Unified Master Reference List (UMRL)*on the Whole Building Design Guide at the Unified Facilities Guide Specification (UFGS) Website . The publications referenced form a part of this specification to the extent referenced. The publications are referred to in the section text by the basic designation only. Industry standards, codes, and Government standards referenced in the section text, and not found in the UMRL, are listed at the beginning of the PTS sections.

The advisory provisions of all referenced codes, standards, and specifications shall be mandatory; substitute words such as "shall", "must", or "required" for words such as "should", "may", or "recommended," wherever they appear. The results of these wording substitutions incorporate these code and standard statements as requirements. Reference to the "authority having jurisdiction" for variance from criteria shall be interpreted to mean the "Chief Engineer, NAVFAC" and for contractural obligations on this project shall be interpreted to mean the "Contracting Officer". Comply with the required and advisory portions of the current edition of the standard at the time of contract award.

The following list of codes and standards is not comprehensive and is

augmented by other codes and standards referenced and cross-referenced in the RFP.

Z10 1.2.1 INDUSTRY CODES

INTERNATIONAL BUILDING CODE (IBC) as modified by UFC 1-200-01. UFC 1-200-01 applies the IBC to the project and references other commercial standards and UFC criteria that become part of the contract.

Z10 1.2.2 INDUSTRY REQUIREMENTS

WHOLE BUILDING DESIGN GUIDE (WBDG)

WHOLE BUILDING DESIGN GUIDE, Ensure Occupant Safety and Health (Systems Safety Engineering) at http://www.wbdg.org/design/ensure_health.php

Z10 1.2.3 GOVERNMENT STANDARDS

Z10 1.2.3.1 UNIFIED FACILITIES CRITERIA (UFC)

UFC 1-200-01	General Building Requirements(UFC 1-200-01 is a hub document that provides general building requirements and references other critical UFCs. A reference to UFC 1-200-01 requires compliance with the Tri-Service Core UFCs. A complete list of these Tri-Service Core UFCs is located in UFGS section 01 33 10.05 20)
UFC 1-300-09N	Design Procedures

Z10 1.2.3.2 FEDERAL STANDARDS

DoD Architectural Barriers Act Accessibility Standard with DEPSECDEF Memorandum

Occupational Safety and Health Association (OSHA)

Z10 1.3 MATERIALS AND EQUIPMENT REQUIREMENTS IDENTIFICATION

Z10 1.3.1 MATERIALS STANDARD

Refer to the Project Program for identification of Government Furnished Equipment.

The equipment items shall be supported by service organizations that are convenient to the equipment installation in order to render satisfactory service to the equipment on a regular and emergency basis during the warranty period of the contract.

Materials, equipment, fixtures, and other appurtenances shall comply

with applicable Underwriters Laboratories, (UL) Inc., American National Standards Institute, Inc., and National Electrical Manufacturer's Association standards or applicable standards of a similar independent testing organization. All materials shall be new, and shall bear the label of Underwriters Laboratories whenever standards have been established and label service is normally and regularly furnished by the agency. All equipment provided shall be listed and labeled suitable for the specified purpose, environment, and application and installed in accordance with manufacturer’s recommendations. Insulation shall be asbestos free.

Z10 1.3.2 EQUIPMENT NAMEPLATE IDENTIFICATION

Each item of equipment shall have a nameplate bearing the manufacturer's name, address, model number, and serial number securely affixed in a conspicuous place. The nameplate of the distributing agent will not be acceptable.

Z10 1.3.3 FIELD-APPLIED NAMEPLATES

Provide laminated plastic nameplates for each piece of equipment. Each nameplate must identify the function and, when applicable, the number designation of that piece of equipment as used in the design documents. Provide melamine plastic nameplates, 0.125 inch (3 mm) thick, white with black center core.

Z10 1.4 COMMISSIONING

Commission the building systems identified in the Project Program paragraph 2.2.3. Refer to UFGS section 01 45 00.05 20, *Design and Construction Quality Control*for commissioning requirements. Test reports must be certified by the Commissioning Authority (CA), that work is in compliance with requirements of the RFP.

Z10 1.5 PERFORMANCE VERIFICATION AND ACCEPTANCE TESTS

Verification of satisfactory construction and system performance shall be via Performance Verification Testing, Acceptance Tests, and submittal of test reports certified by the Designer of Record (DOR), that work is in compliance with requirements of the RFP. The Government reserves the right to witness all Performance Verification and Acceptance Tests, review data, and request other such additional inspections and repeat tests as necessary to ensure that the work and provided services conform to the stated requirements. Contractor shall pay the cost of all testing.

Refer to each PTS section to identify Performance Verification and Acceptance Testing required by the work specified in that PTS section.

Z10 1.6 SUBMITTALS

Contractor's design submittals that combines design and construction submittals, must jointly comply with UFGS sections 01 33 00.05 20, *Construction Submittal Procedures*and 01 33 10.05 20, *Design Submittal Procedures*. Contractor's construction submittals that submitted separate from the design submittals must comply with UFGS 01 33 00.05 20, *Construction Submittal Procedures*.

Refer to “"Construction Quality Control" in UFGS 01 33 00.05 20, *Construction Submittal Procedures*and 01 45 00.05 20, *Design and Construction Quality Control*to define reviewing and approving Authority of design and construction submittals.

Utilize the same materials and equipment that are approved and provided for an initial facility design, on all follow-on facilities that use the same design with-in this contract. Once the initial facility design is approved by the Government, the Contractor must obtain Government approval to change materials and equipment when designing and constructing follow-on facilities utilizing the same design.

Z10 1.6.1 DESIGN SUBMITTALS

Design submittals shall be in accordance with Unified Facility Guide Specification (UFGS) section 01 33 10.05 20, *Design Submittal Procedures*, UFC 1-300-09N, *Design Procedures*, and other discipline-specific guidelines listed in the applicable PTS sections.

UFGS Section 01 33 10.05 20, *Design Submittal Procedures*and some PTS sections requires the use of UFGS sections in the development on the contractor originated specification. The Designer of Record (DOR) shall edit the UFGS sections for the project and submit the edited specification as a part of the design submittal. The DOR shall edit the UFGS as follows:

(1) Prepare UFGS Specifications as part of the project specification,

(2) Delete only portions of the UFGS specification that are not applicable to the project,

(3) Edit only the bracketed choices that are within the UFGS specification text,

(4) Edit blank bracketed options to include requirements that exercise prudence and adherence to acceptable industry standards,

(5) Comply with the directions, directives, and requirements of all UFGS Criteria Notes. The UFGS Criteria Notes are typically bordered on the top and bottom by a line of asterisks to highlight their location.

(6) If proprietary information is provided or required to streamline the construction submittal process, include proprietary information in the edited UFGS sections and added to the end of each UFGS section. Confirm that the proprietary products, materials, and systems listed in the specifications are in compliance with the requirements of the RFP.

Z10 1.6.2 CONSTRUCTION SUBMITTALS

Submit for approval to the Designer of Record (DOR), construction submittals, product data, manufacturer's information, shop drawings, and test reports on all materials and systems installed in the project, unless the DOR designates submittal for QC approval. Refer to each PTS section for further construction submittal requirements relating

to the work identified in that particular PTS section. Some PTS sections reference UFGS sections that will require more construction submittals for DOR approval than is stated above. Refer to Section 01 33 00.05 20 for the list of construction submittals reserved for Government Approval and Government Surveillance.

--End of Section--

THIS PAGE HAS BEEN INTENTIONALLY LEFT BLANK

PART FIVE - PRESCRIPTIVE SPECIFICATIONS

01 91 00.00 40 COMMISSIONING
14 24 00 HYDRAULIC ELEVATORS
23 08 00.00 10 COMMISSIONING OF HVAC SYSTEMS

THIS PAGE HAS BEEN INTENTIONALLY LEFT BLANK

01 91 00.00 40

COMMISSIONING
11/12

PART 1 GENERAL

The requirements of this Section apply to, and are a component part of, each section of the specifications.

This Section includes:

a. Building commissioning of the following systems:

(1) HVAC components and equipment

(2) HVAC system: interaction of cooling, heating, and comfort delivery systems

(3) Building Automation System (BAS): control hardware and software, sequence of operations, and integration of factory controls with BAS

The Government and Commissioning Agent are not responsible for construction means, methods, job safety, or management function related to commissioning on the job site.

The commissioning process does not take away from or reduce the responsibility of the system designers or installing contractors to provide a finished and fully functioning product.

The following Sections are an integral part of this project Commissioning:

a. Section 01 30 00.05 20 ADMINISTRATIVE REQUIREMENTS FOR DESIGN-BUILD

b. Section 01 75 00 STARTING AND ADJUSTING

c. Section 23 00 00 AIR SUPPLY, DISTRIBUTION, VENTILATION, AND EXHAUST SYSTEMS

d. Section 23 03 00.00 20 BASIC MECHANICAL MATERIALS AND METHODS

1.1 REFERENCES

The publications listed below form a part of this specification to the extent referenced. The publications are referred to within the text by the basic designation only.

ASTM INTERNATIONAL (ASTM)

ASTM D6245	(2012) Using Indoor Carbon Dioxide Concentrations to Evaluate Indoor Air Quality and Ventilation

U.S. GREEN BUILDING COUNCIL (USGBC)

LEED GBDC	(2009) LEED Reference Guide for Green Building Design and Construction

1.2 DEFINITIONS

a. Basis of Design - The basis of design is the documentation of the primary thought processes and assumptions behind design decisions that were made to meet the Project Requirements. The basis of design describes the systems, components, conditions and methods chosen to meet the intent. Some reiterating of the Project Requirements may be included.

b. Commissioning - Commissioning is a comprehensive and systematic process to verify that the building systems perform as designed to meet the requirements. Commissioning during the construction, acceptance, and warranty phases intends to achieve the following specific objectives:

(1) Verify and document that equipment is installed and started per manufacturer's recommendations, industry accepted minimum standards, and the Contract Documents.

(2) Verify and document that equipment and systems receive complete operational checkout by the installing contractors.

(3) Verify and document equipment and system performance.

(4) Verify the completeness of Operations and Maintenance materials.

(5) Ensure that the operating personnel are adequately trained on the operation and maintenance of the building equipment.

c. Commissioning Agent (CA) - develops the functional test procedures in a sequential written form, coordinates, oversees and documents the actual testing, which is usually performed by the installing contractor or vendor. Functional Performance Tests are performed after pre-functional checklists and startup are complete.

d. Commissioning Plan - an overall plan that provides the structure, schedule and coordination planning for the commissioning process.

e. Deficiency - a condition in the installation or function of a component, piece of equipment or system that is not in compliance with the Contract Documents, does not perform properly, or is not complying with the Project Requirements.

f. Project Requirements - a dynamic document that provides the explanation of the ideas, concepts and criteria that are considered to be very important to the Government. It is initially the outcome of the programming and conceptual design phases.

g. Functional Performance Test - test of the dynamic function and operation of equipment and systems using manual (direct observation) or monitoring methods. Functional testing is the dynamic testing of systems (rather than just components) under full operation (e.g., the chiller pump is tested interactively with the chiller functions to see if the pump ramps up and down to maintain the differential pressure setpoint). Systems are tested under various modes, such as during low cooling or heating loads, high loads, component failures, unoccupied, varying outside air temperatures, fire alarm, power failure, etc. The systems are run through all the control system's sequences of

operation and components are verified to be responding as the sequences state. Traditional air or water test and balancing (TAB) is not functional testing, in the commissioning sense of the word.

h. Manual Test - using hand-held instruments, immediate control system readouts or direct observation to verify performance (contrasted to analyzing monitored data taken over time to make the "observation").

i. Monitoring - the recording of parameters (flow, current, status, pressure, etc.) of equipment operation using data loggers or the trending capabilities of control systems.

j. Pre-functional Checklist - a list of items to inspect and elementary component tests to conduct to verify proper installation of equipment, provided by the Commissioning Agent to the contractor. Pre-functional checklists are primarily static inspections and procedures to prepare the equipment or system for initial operation (e.g., belt tension, oil levels OK, labels affixed, gages in place, sensors calibrated, etc.). However, some pre-functional checklist items entail simple testing of the function of a component, a piece of equipment or system (such as measuring the voltage imbalance on a three-phase pump motor of a chiller system). The word "pre-functional" refers to before functional testing. Pre-functional checklists augment and are combined with the manufacturer's start-up checklist.

k. Warranty Period - warranty period for entire project, including equipment components. Warranty begins at Substantial Completion and extends for at least one year, unless specifically noted otherwise in the Contract Documents and accepted submittals.

1.3 ADMINISTRATIVE REQUIREMENTS

A third party Commissioning Agent will provide commissioning services for the system. Expedite the testing process and minimize unnecessary delays, while not compromising the integrity of the procedures. The commissioning process requires cooperation of the Contractor, subcontractors, vendors, Designer of Record, Commissioning Agent, and Contracting Officer.

1.3.1 Co-ordination

Commissioning Agent is responsible for overall co-ordination and management of the commissioning program. The commissioning team comprises the following groups:

a. Commissioning Agent

b. Contractor's Mechanical Representative

c. Contractor's Electrical Representative

d. Contractor's Testing and Balancing (TAB) Representative

e. Designer of Record

f. Contracting Officer's Representative

Using Agency's Representative

Coordinate with IAQ baseline evaluation in conformance with ASTM D6245.

1.3.2 Progress Meetings

Commissioning Agent will plan and co-ordinate meetings as required to monitor construction and commissioning progress. Notify the Contracting Officer of construction job-site meetings to address co-ordination, deficiency resolution and planning issues.

1.3.3 Functional Testing Co-ordination

Do **not** "temporarily" start equipment for commissioning. Do not conduct functional performance testing until a pre-functional, start-up and TAB is completed for a given system. Do not functionally test the controls system and equipment it controls until all points have been calibrated and the pre-functional checklists are completed.

1.4 SUBMITTALS

Government approval is required for submittals with a "G" designation; submittals not having a "G" designation are for information only. When used, a designation following the "G" designation identifies the office that will review the submittal for the Government. Submit the following in accordance with Section 01 33 00.05 20 CONSTRUCTION SUBMITTAL PROCEDURES:

SD-01 Preconstruction Submittals

Commissioning Plan; G

Commissioning Schedule; G

SD-06 Test Reports

Functional Performance Testing Results; G

Deficiency Report and Resolution Record; G

SD-11 Closeout Submittals

Final Commissioning Report; G

LEED™ Documentation; G

1.5 DESIGN REVIEW AND DOCUMENTATION

Commissioning Agent documents Project Requirements as they relate to environmentally responsive characteristics, including:

a. Functionality

b. Energy performance

c. Water efficiency

d. Maintainability

e. Indoor environmental quality

Commissioning Agent reviews design documents to verify that each commissioned system meets the Project Requirements, including conformance with ASTM D6245 and LEED GBDC for new construction.

Commissioning Agent reviews construction documents to verify that commissioning is adequately specified, that each commissioned system can be commissioned and is likely to meet the Project Requirements.

1.6 RESPONSIBILITIES

The responsibilities of various parties in the Cx process are as specified. The Contracting Officer and CA are not responsible for construction means, methods, job safety, or management function related to Cx on the job site.

1.6.1 CA Responsibilities

The CA is responsible for verification of compliance with the Cx Plan and the review of Cx checklists and reports. This shall involve coordinating and directing the Cx activities in a logical, sequential, and efficient manner using consistent protocols and forms, centralized documentation, clear and regular communications and consultations with all necessary parties, frequently updated timelines and schedules, and technical expertise. All submittals applicable to systems being commissioned shall be reviewed and evaluated by the CA for compliance with Cx needs and the Contract documents. During construction, the CA shall attend selected planning and construction meetings to obtain information on construction progress; review construction meeting minutes for potential revisions or substitutions related to the Cx process; and assist in resolving any discrepancies.

1.6.2 Contractor Responsibilities

The Contractor shall include the cost of Cx coordination, prefunctional checks, and testing support in the contract price, including the cost of sheaves and belts that may be required by testing, adjusting, and balancing (TAB). The contractor shall include the cost of a controls technician and TAB technician for the duration of functional testing and any retesting. In each subcontract written, requirements for submittal data, Cx documentation, shall be included by the Contractor. The Contractor shall ensure proper coordination and submission of all documents. During construction, the Contractor shall maintain as-built red-line drawings for all drawings and final CAD as-builts for contractor-generated coordination drawings. These drawings shall be updated after completion of Cx (excluding deferred testing). The Contractor shall perform the prefunctional checklists prior to the start of function testing.

PART 2 PRODUCTS

2.1 SYSTEM DESCRIPTION

2.2 TEST EQUIPMENT

Ensure instrumentation used for testing meets the following standards:

a. Sufficient quality and accuracy to test and measure system performance

within the tolerances required to determine adequate performance.

b. Calibrated on the manufacturer's recommended intervals with calibration tags permanently affixed to the instrument being used.

c. Maintained in good repair and operating condition throughout the duration of use on this project.

The Contractor will provide all standard testing equipment required for performing startup and initial checkout and required functional performance testing for the system. Datalogging equipment will be provided by the Commissioning Agent, and not become the property of the Government.

2.2.1 Commissioning Plan

The commissioning plan identifies how commissioning responsibilities are distributed. The intent of this plan is to evoke questions, expose issues, and resolve them with input from the entire commissioning team early in construction.

The Plan identifies who is responsible for producing the various procedures, reports, forms, and notifications. It will include the Commissioning Schedule and describe the test/acceptance procedure.

2.3 START-UP/PRE-FUNCTIONAL CHECKLISTS

Coordinate start-up plans and documentation formats, including pre-functional checklists to be completed during the startup process. Manufacturer's start-up checklists and other technical documentation guidelines can be used as the basis for pre-functional checklists.

PART 3 EXECUTION

3.1 COMMISSIONING PROCESS

The Commissioning Agent coordinates all activities. The following activities outline the commissioning tasks and the general order in which they occur.

a. Design Review and documentation consisting of:

(1) Documentation of Project Requirements

(2) Design Development Review

(3) Construction Document Review

b. Commissioning Kick-off Meeting

c. Commissioning Plan

d. Submittals Review

e. Start-Up/Pre-Functional Checklists

f. Functional Performance Testing

g. Deficiency Report and Resolution Record

h. Record Documents Review

i. Final Commissioning Report and LEED™ Documentation

j. Deferred testing due to unforeseen deferred tests.

3.2 FUNCTIONAL PERFORMANCE TESTING

CA develops test procedures identifying the configuration and steps required for each test. Testing documents will be sufficiently detailed so that another party can repeat the tests with virtually identical results.

3.2.1 Functional Performance Test Procedures

Test procedures and forms serve to verify and document proper operation of each piece of equipment and system under various conditions and modes of operation. Review and coordinate test procedures with the CA for feasibility, safety, equipment and warranty protection.

3.2.2 Test Methods

Methods for functional performance testing and verification include direct manipulation of system inputs (i.e. heating or cooling sensors), manipulation of system inputs with the building automation system (i.e. software override of sensor inputs), trend logs of system inputs and outputs using the building automation system, or short-term monitoring of system inputs and outputs using stand alone data loggers. The Commissioning Agent determines which method, or combination of methods, is most appropriate.

3.2.3 Setup

Perform each test procedure under conditions that simulate normal operating conditions as closely as possible. Where equipment requires integral safety devices to stop/prevent equipment operation unless minimum safety standards or conditions are met, have functional performance test procedures demonstrate the actual performance of safety shutoffs in a real or closely-simulated conditions of failure.

3.2.4 Sampling

The Commissioning Agent develops a sampling strategy when multiple identical pieces of non-life-safety or non-critical equipment may be functionally tested. If, after two test attempts at testing the specified sample percentage, failures are still present, then all remaining units will be tested at the contractors' expense.

3.2.5 Functional Performance Testing Results

Commissioning Agent coordinates, observes and record the results of the functional performance testing. CA coordinates retesting as necessary until satisfactory performance is verified.

3.3 DEFICIENCY REPORT AND RESOLUTION RECORD

Document items of non-compliance in materials, installation or operation.

3.3.1 Non-Conformance

Immediately address observed non-conformance and deficiencies in terms of notification to responsible parties, and provide recommended actions to correct deficiencies.

Corrections of deficiencies identified should be made within two days while the Commissioning Agent is on site during the tests at the discretion of the Commissioning Agent. In such cases document the deficiency and resolution on the procedure form.

3.3.1.1 Identified Deficiencies Correction Procedure

If there is no dispute on the deficiency and the responsibility to correct it:

a. The Commissioning Agent documents the deficiency and the adjustments or alterations required to correct it. The Contractor corrects the deficiency within two days and notifies the Commissioning Agent that the equipment is ready to be retested.

b. The Commissioning Agent reschedules the test and the test is repeated.

If there is a dispute about a deficiency or who is responsible:

a. The deficiency is documented on the non-compliance form and a copy given to the Government Representative.

b. Resolutions are made at the lowest management level possible. Additional parties are brought into the discussions as needed. Contractor has responsibility for resolving construction deficiencies. If a design revision is deemed necessary and approved by the Contracting Officer, the Designer of Record has responsibility for providing a design revision.

c. The Commissioning Agent documents the resolution process.

d. Once the interpretation and resolution have been decided, the appropriate party corrects the deficiency and notifies the Commissioning Agent that the equipment is ready to be retested. The Commissioning Agent reschedules the test and the test is repeated until satisfactory performance is achieved.

The Contractor is responsible for retesting costs.

3.4 FINAL COMMISSIONING REPORT

Commissioning Agent submits a Final Commissioning Report summarizing all of the tasks, findings, conclusions, and recommendations of the commissioning process.

Compile and submit LEED™ Documentation. Format as required by USGBC for submittal under the referenced green building rating system.

3.5 DEFERRED TESTING

3.5.1 Unforeseen Deferred Tests

If a test cannot be completed due to the building structure, required

occupancy condition, or other deficiency, the functional testing may be delayed upon recommendation of the Commissioning Agent and the approval of the Contracting Officer.

3.6 EQUIPMENT AND SYSTEM SCHEDULE

Commission the following equipment in this project.

System	Equipment	Check
HVAC System	Pumps	
	Cooling Tower	
	Variable frequency drives	
	Air Handlers	
	Packaged AC units	
	Water Source Heat Pumps	
	Unit heaters	
	Heat exchangers	
	Exhaust fans	
	Supply fans	
BAS System		
Electric Lighting System	Lighting Controls	
Plumbing System	Domestic Hot Water Heater	
	Domestic Water Booster Pump	
	Hot Water Recirculation Pump	

-- End of Section --

THIS PAGE HAS BEEN INTENTIONALLY LEFT BLANK

SECTION 14 24 00

HYDRAULIC ELEVATORS
08/10

PART 1 GENERAL

1.1 REFERENCES

The publications listed below form a part of this specification to the extent referenced. The publications are referred to within the text by the basic designation only.

AMERICAN WELDING SOCIETY (AWS)

AWS D1.1/D1.1M	(2010) Structural Welding Code - Steel

ASME INTERNATIONAL (ASME)

ASME A17.1/CSA B44	(2007; Addenda A 2008; Addenda B 2009) Safety Code for Elevators and Escalators
ASME A17.2	(2007) Guide for Inspection of Elevators, Escalators, and Moving Walks Includes Inspection Procedures for Electric Traction and Winding Drum Elevators, Hydraulic Elevators, and Escalators and Moving Walks
ASME B16.11	(2009) Forged Fittings, Socket-Welding and Threaded
ASME B16.9	(2007) Standard for Factory-Made Wrought Steel Buttwelding Fittings

ASTM INTERNATIONAL (ASTM)

ASTM A 106/A 106M	(2008) Standard Specification for Seamless Carbon Steel Pipe for High-Temperature Service
ASTM A 53/A 53M	(2007) Standard Specification for Pipe, Steel, Black and Hot-Dipped, Zinc-Coated, Welded and Seamless

INTERNATIONAL CODE COUNCIL (ICC)

ICC IBC	(2009; Errata First Printing) International Building Code

NATIONAL ELEVATOR INDUSTRY, INC. (NEII)

NEII-1	(2000; R thru 2010) Building Transportation Standards and Guidelines, including the Performance Standards Matrix for New Elevator Installation

NATIONAL FIRE PROTECTION ASSOCIATION (NFPA)

NFPA 252	(2008) Standard Methods of Fire Tests of Door Assemblies
NFPA 70	(2011) National Electrical Code

U.S. NATIONAL ARCHIVES AND RECORDS ADMINISTRATION (NARA)

29 CFR 1910.27	Fixed Ladders
36 CFR 1191	Americans with Disabilities Act (ADA) Accessibility Guidelines for Buildings and Facilities

1.2 SYSTEM DESCRIPTION

Provide a pre-engineered elevator system, by manufacturer regularly engaged in the manufacture of elevator systems, that complies with ASME A17.1/CSA B44 and ASME A17.2 in their entirety, and additional requirements specified herein.

1.2.1 Miscellaneous Requirements

Submit one set of wiring diagrams, in plastic or glass cover, framed and mounted in elevator machine room for revised building electrical system, if needed, to make supplied elevator system function as specified. Deliver other sets to Contracting Officer. Coded diagrams are not acceptable unless adequately identified. Submit calculations for the Reaction Loadsimposed on the building by and Heat Loads generated by the elevator system.

1.3 SUBMITTALS

Government approval is required for submittals with a "G" designation; submittals not having a "G" designation are for information only. Submit the following in accordance with Section 01 33 00 SUBMITTAL PROCEDURES:

SD-02 Shop Drawings

Detail Drawings; G

SD-03 Product Data

Passenger Elevators; G
Freight Elevators; G
Information on motor, pump, gages, piston and cylinder, piping and valves, hall station, and buffer on elevators and accessories. For elevator supporting systems, include information on car control and emergency power systems. On data sheets, provide document identification number or bulletin number, published or copyrighted prior to the date of contract bid opening.

Field Quality Control Plan; G
Logic Control; G

SD-05 Design Data

Reaction Loads; G
Calculations of reaction loads imposed on building by elevator system that comply with ASME A17.1/CSA B44. Calculations shall be certified by a Registered Professional Engineer. Do not fabricate materials nor perform construction until approved.

Heat Loads; G
Calculations for total anticipated heat loads generated by all the elevator machine room equipment. A Registered Professional Engineer shall provide certified calculations. Do not fabricate materials nor perform construction until approved.

SD-06 Test Reports

Field Tests Reports; G

SD-07 Certificates

Qualifications; G
A letter no later than 14 days after the Notice to Proceed providing the name and Statement of Qualifications, including ASME A17.1/CSA B44 Certificate and all required state and local licenses of the individual who will perform the duties specified herein for the Elevator Inspector. A letter of endorsement from the elevator manufacturer certifying that the Elevator Specialist is acceptable to manufacturer no later than 14 days after the Notice to Proceed providing the name and Statement of Qualifications of the individual who will perform the duties specified herein for the Elevator Specialist. Copies of certified welders' qualifications, demonstrating compliance with AWS D1.1/D1.1M, Section 4; list welders' names with corresponding code marks.

SD-10 Operation and Maintenance Data

Operation and Maintenance Manuals; G
Maintenance and Diagnostic Tools; G
Maintenance and Diagnostic Software
Maintenance and Repair Action Plan; G
Three Operation and Maintenance Manuals, 28 days prior to the Operation and Maintenance Training. Include a list of phone numbers, personnel contacts, and all tools required for operation and maintenance.

Operation and Maintenance Training; G
Proposed Onsite Training schedule, submitted concurrently with the Operation and Maintenance Manuals.

1.4 QUALITY ASSURANCE

1.4.1 Elevator Specialist

Perform work specified in this section under the direct guidance of the Elevator Specialist who is regularly engaged in the installation and maintenance of the type and complexity of elevator system specified in the contract documents, and who served in a similar capacity for at least three

systems that have performed in the manner intended for a period of not less than 24 months. Provide endorsement letter from the elevator manufacturer certifying that the Elevator Specialist is acceptable to manufacturer. The Elevator Specialist oversees the acceptance inspections and tests, signs and certifies the successful results. Provide the Elevator Specialist's written certification that the installation is in accordance with the contract requirements, after completion of the acceptance inspections and tests. Bring any discrepancy to the attention of the Contracting Officer in writing, no later than three working days after the discrepancy is discovered.

1.4.2 Elevator Inspector

a. The Elevator Inspector shall be certified in accordance with the requirements of ASME A17.1/CSA B44 and licensed by the State of Virginia in elevator repair, except in the State of Hawaii. The Certified Elevator Inspector shall inspect the installation of the elevator(s) to ensure that the installation conforms with all contract requirements. The Elevator Inspector shall be directly employed by the Prime Contractor and be independent of the Elevator System Manufacturer and the Elevator Specialist, shall witness the acceptance inspections and tests, approve all results and shall sign and certify the successful results. The Elevator Inspector, after completion of the acceptance inspections and tests, shall certify in writing that the installation is in accordance with the contract requirements. Bring any discrepancy to the attention of the Contracting Officer in writing, no later than three working days after the discrepancy is discovered.

b. The Elevator Inspector will be provided by the Government to inspect the installation of the elevator(s) to ensure that the installation conforms to all contract requirements. The Elevator Inspector will witness the acceptance inspections and tests, approve all results, and shall sign and certify the successful results. The Elevator Inspector, after completion of the acceptance inspections and tests, will provide written certification that the installation is accordance with the contract requirements.

1.4.3 Welders' Qualifications

Comply with AWS D1.1/D1.1M, Section 4 Qualification. Provide certified copies of welders' qualifications. List welders'names with corresponding code marks to identify each welder's work.

1.4.4 Detail Drawings

Submit detail drawings, including dimensioned layouts in plan and elevation showing the arrangement of elevator equipment, accessories, supporting systems, anchorage of equipment, clearances for maintenance and operation; and details on hoistway, doors and frames, operation and signal stations, controllers, motors, guide rails and brackets, cylinder and plunge unit, and points of interface with normal power fire alarm system, HVAC or exhaust systems and interface with emergency power systems. Provide drawings to show any revised building electrical system required to make supplied elevator system function as specified. Prepare drawings with complete wiring diagrams showing electrical connections and other details required to demonstrate sequence of operations and functions of system devices. Include

the appropriate sizing of electrical protective devices on the drawings, which are frequently different from National Electrical Code standard sizes.

1.5 SCHEDULING

Every six months, test systems for Emergency Power Operation, and Firefighters' Service. Schedule to not interfere with building operations. For Firefighters' Service, test monthly in accordance with ASME A17.1/CSA B44, Section 8.6.10.1. Provide written results of each test operation to the Contracting Officer. Document all inspection and testing. Maintain copy of documentation in machine room.

1.6 WARRANTY

Provide routine warranty service in accord with manufacturer's warranty requirements, for a period of 12 months after the date of acceptance by Contracting Officer. Perform work during regular working hours. During the warranty service period, include 24-hour emergency service, with 1 hour response time, without additional cost to the Government. Include adjustments, greasing, oiling, and cleaning. Provide routine inspection and tests of elevators in accordance with ASME A17.1/CSA B44 Section 8.11.3 and ASME A17.2. Provide supplies and parts to keep elevator system in operation. Perform service only by factory trained personnel. Maintain a maintenance log of all service orders performed during the warranty period and submit it to the Contracting Officer 21 days prior to the end of the warranty period.

1.7 MAINTENANCE AND REPAIR ACTION PLAN

Provide plan of action prepared by the Elevator Specialist for emergency and routine maintenance in accordance with paragraph titled WARRANTY. Provide a list of phone numbers, personnel contacts, and all maintenance and diagnostic tools provided by paragraph "Maintenance and Diagnostic Tools", to the Contracting Officer.

1.7.1 Maintenance and Diagnostic Tools

Provide all special tools and software necessary to service and maintain each elevator delivered at time of final acceptance. Provide one of each tool per group of elevators. Include solid state or microprocessor diagnostic tools unavailable on the open market. Provide necessary diagnostic software in cases where the solid state or microprocessor diagnostic tools are available on the open market

1.7.2 Keys for Elevator Key Switches

Provide a minimum of twelve keys per unique cylinder used on all key switches for single elevator. If there is more than one elevator, additional keys are not required unless there are additional unique cylinders. Provide keys with brass or fiberglass tags marked 'PROPERTY OF THE U.S. GOVERNMENT' on one side with function of key or approved code number on other side.

PART 2 PRODUCTS

2.1 PASSENGER / SERVICE ELEVATORS

Two passenger / service elevators will be required for the project, one for the parking garage and one for the building. In addition to transporting passengers, the elevator for this project will be used for the transport of furniture, equipment, building supplies and waste removal.

2.1.1 Building Passenger / Service Elevators -Basic Requirements

a. Rated Load: 4,000 lbs.

b. Rated Speed: 150 fmp.

c. Travel Length: Approximately 32 Feet.

d. Number of Stops: Three (3)

e. Number of Hoist Way Openings: Three (3) Front

f. Car Inside Dimensions: 5ft. – 8 in. wide, 7 ft. – 5 in. deep and 8 ft. – 0 in. high

g. Car Door Types: Left Opening.

h. Car Door Width: 4 ft. – 0 in.

i. -Car Door Height: 7 ft. – 0 in.

j. Elevator Type: Direct plunger holed hydraulic.

k. Additional Features

1. Accessibility Signage

2. Car Reader Provisions

3. CCTV Provisions

4. Tamper Resistant Fasteners for all fastenings exposed to the public

5. Sill Support Angles

6. Emergency Paging Speaker Installation

7. Signage Engraving filled with Black Paint or Approved Etched Process

8. No Visible Company Name or Logo

2.1.2 Building Passenger / Service Elevator-Cab Enclosures and Door Finishes

Provide finishes as listed below:

a. Floor; Large Scale – Porcelain tile and base.

b. Walls; Laminate per manufacturers range.

c. Interior face of doors (s); stainless steel.

d. Ceilings; supported and metal pans stainless steel with recessed halogen down lights. Number of down lights shall be dependent on platform size with a minimum of six .

e. Hoistway Doors and Frame Finishes; provide finishes on exterior of hoistway as follows:

(1) Frame; stainless steel.

(2) Exterior face of door; stainless steel.

2.2 SPECIAL OPERATION AND CONTROL

Provide all special operations and control systems in accordance with ASME A17.1/CSA B44. Provide special operation key switches with 6 pin cylinder locks with removable cores an a key control lock for each operation system.

2.2.1 Firefighters' Service

Provide equipment and signaling devices. The designated level for Firefighters' key operated switch is the ground floor.

2.2.2 Smoke Detectors

Provide connections directly to elevator controls which will, when smoke is detected by any smoke detector, actuate Firefighters' Service and send each elevator to the correct floor as required by ASME A17.1/CSA B44. Provide dual-contact smoke detectors located in the elevator lobbies and the elevator machine room. Provide dual-contact smoke detector at top of hoistway. Include only these smoke detectors with the circuit for elevator controller actuation of Firefighters' Service. In lieu of dual-contact smoke detectors, use an addressable fire alarm system with listed smoke detectors in the above stated locations. Ensure that all smoke detectors are mounted on finished ceiling.

2.2.3 Fire Sprinklers

For each elevator, provide control wiring connecting the flow switch to the shunt trip equipped circuit breaker within the electrical panel serving the main line disconnect. Upon flow of water, equip flow switch to instantaneously send a signal to cause opening of shunt-trip equipped mainline circuit breaker, in compliance with ASME A17.1/CSA B44, Section 2.8.2, and send a signal to fire alarm control panel to indicate water flow condition. Provide machine room sprinkler flow switch actuation to shunt trip all elevator(s) served by the machine room. Provide hoistway sprinkler flow switch actuation to shunt trip all elevator(s) in the hoistway.

2.2.4 Top-of-Car Operating Device

Provide operating device mounted on or from car crosshead, to permit operation of car at 150 fpm maximum for adjustment, maintenance, testing, and repair. Include integral or remote safety device, continuous pressure

"UP" and "DOWN" switches or buttons, emergency stop switch, and inspection switch.

2.2.5 Hoistway Access Switches

Provide key-operated hoistway access switch to permit limited movement of car at terminal floors for car positioning, operative only when "INSPECTION" switch in car operating panel is in the "INSPECTION" position. Locate switch 6 feet above floor level, within 12 inches of hoistway entrance frame or with only ferrule exposed when located in entrance frame.

2.2.6 Independent Service

Provide exposed key-operated switch in car operating panel to enable independent service and simultaneously disable in-car signals and landing-call responses. Provide indicator lights that automatically illuminate during independent service.

2.2.7 Elevator Operation

2.2.7.1 Single, Two-Stop, Automatic Operation

Provide Single Two-Stop Automatic Operation. Provide illuminating push buttons.

2.2.7.2 Selective Collective Automatic Operation

Provide Selective Collective Automatic Operation. Provide illuminating push buttons.

2.2.7.3 Duplex Selective Collective Automatic Operations

Provide Duplex Selective Collective Automatic Operation. Provide a single push button for terminal landings and dual push buttons, up and down, at intermediate landings. In each car operating panel, provide push buttons numbered to correspond to each landing. If a car is taken out of service, or fails to respond to a landing call within a predetermined adjustable time limit of approximately 40 to 180 seconds, transfer calls to the other elevator functioning as a Selective Collective elevator until the out-of-service car is returned to the system. Provide a push-button riser adjacent to each elevator.

2.2.7.4 Group Automatic Operation

Provide Group Automatic Operation. Provide a single push button for terminal landings and dual push buttons, up and down, at intermediate landings. In each car operating panel, provide push buttons numbered to correspond to each landing. If a car is taken out of service, or fails to respond to a landing call within a predetermined adjustable time limit of approximately 40 to 180 seconds, transfer calls to another car until the out-of-service car is returned to the system. Provide a push-button riser adjacent to each elevator.

2.2.8 Parking Switch

Provide two-position parking switch in car station service cabinet. One position causes car to remain parked at floor landing where last used; other position causes car to park at main floor.

2.2.9 Hospital Emergency Commandeering Service

Provide "ON-OFF" key switch and indicator light at all landings to cause one elevator to respond directly to the landing activated. Turning switch to "ON" position cancels previously registered "CAR" calls and requires car to bypass hall calls while in route to activated landing. On arrival, car shall remain at landing with hoistway and car doors open for predetermined time to permit car to be placed on emergency service. If the person decides not to use car during predetermined time period, car door closes and car automatically returns to normal service. Provide indicator lights that automatically illuminate during emergency service. Permit Removal of the key only when key is in "OFF" position.

2.3 ELEVATOR DRIVE SYSTEM

Provide hydraulic elevator drive system, including pump unit, piping, cylinder/plunger assembly, and associated equipment, which will operate at a maximum working pressure of 500 psi or less. Provide complete elevator system that meets or exceeds the NEII-1.

2.3.1 Hydraulic Pump Unit

Provide self-contained pump unit, including oil-hydraulic elevator pump, electric motor, suction-line oil strainer, oil-tight drip pan, and structural steel outer base with tank supports and isolation pads. Provide oil tank capacity for full plunger displacement plus at least 10 gallons. Provide means to maintain oil temperature between 80 and 120 degrees F regardless of ambient temperature. Limit acoustic output in elevator machine room to 80 dbA.

2.3.1.1 Pump Motor

Provide intermittent-duty pump motor rated at 120 starts/hour. Provide motor that is sized so that the motor amperage does not exceed the motor data tag amperage in any operating condition, exclusive of acceleration and deceleration. Provide minimum of one megohm insulation resistance between conductors and motor frame. Provide motor and pump nameplate and data tags permanently mounted on the outside of the pump unit frame, with all data viewable without the use of mirrors or other tools.

2.3.2 Hydraulic Controls and Equipment

Provide control valve, overspeed (rupture) valve, blowout-proof muffler, and hydraulic pump discharge strainer in the hydraulic oil supply line. Provide 1/4 turn, manual shutoff ball-valves in the elevator machine room and in the hoistway pit. Provide scavenger pump in hoistway pit.

2.3.2.1 Hydraulic Control Valve

Provide constant-velocity, down-speed regulated, control valve. Down-speed regulated control valve allows the car to travel at the same speed in the down direction, regardless of the load on the elevator. In addition, the hydraulic control valve shall have built-in adjustment capability to operate the elevator at 140 percent of rated speed in the down direction to facilitate periodic testing of the overspeed safety valve.

2.3.2.2 Hydraulic Overspeed Safety Valve

Provide overspeed safety valve in hydraulic oil supply line, directly adjacent to the hydraulic cylinder. Provide threaded pipe connections between the hydraulic cylinder and the overspeed valve. Provide valve equipped with manufacturer's manual shutoff feature. Overspeed valve shall not be equipped with a manual lowering feature. Provide adjustable valve with means to seal adjustment after inspection and testing by certified elevator inspector.

2.3.2.3 Hydraulic Oil Scavenger Pump

Provide a scavenge oil reservoir with strainer and transfer pump. Provide a manual-reset pit flood switch to prevent pump operation if pit is flooded. Anchor pump and reservoir to pit floor.

2.3.3 Hydraulic Piping and Accessories

Provide ASTM A 53/A 53M or ASTM A 106/A 106M, Schedule 80, black steel piping with ASME B16.9 or ASME B16.11 fittings for supply piping. Extend schedule 80 piping from the pump control valve body, inside the pump unit, to the hydraulic cylinder in the hoistway. Provide welded or threaded forged pipe fittings for all fittings and components of the hydraulic oil supply line. For direct plunger cylinders, provide dielectric union or isolation couplings at each end of the hydraulic oil supply line. Provide hangers or supports for all piping and components.

2.3.3.1 Containment of Hydraulic Oil Supply Line

Protect all portions of hydraulic oil supply line that are installed below ground, including portions encapsulated in concrete or covered by construction, with continuous, Schedule 80, PVC. Inside diameter of PVC shall be 3 inches larger than the outside diameter of the hydraulic oil supply line pipe and couplings.

2.3.4 Hydraulic Elevator Type

Provide a direct plunger type hydraulic elevator. Do not utilize telescopic or inverted cylinder-plunger units. Telescopic and inverted jacks are not acceptable. Do not utilize roped-hydraulic elevator design.

2.3.4.1 Cylinder-Plunger (Jack) Unit

Provide a single-stage plunger of seamless steel construction. Provide cylinder with self-stabilizing mount that will support and hold cylinder plumb without the need for stabilization means at the bottom of the cylinder. Provide a threaded, 1/4 inch bleeder valve at the top of the cylinder, just below packing gland.

2.3.5 Cylinder Well System

For direct plunger type hydraulic elevator, the cylinder well system consists of a sealed, dry well casing and a PVC liner.

2.3.5.1 Well Casing

Locate and drill well for the cylinder well system. Line well with steel casing, minimum 1/4 inch wall with welded 1/2 inch steel bottom. Set casing plumb. Provide a dry, sealed well casing.

2.3.5.2 PVC or HDPE Cylinder Liner

Provide Schedule 80 PVC or HDPE pipe liner with bottom cap and couplings; joints sealed watertight using pipe manufacturer's recommended adhesive or heat welding methods. Provide liner inside diameter not less than 3 inches larger than elevator cylinder maximum outside diameter. Liner shall extend above hoistway pit finish floor. Liner may be provided as a cylinder manufacture's applied liner or as a separate component. For separate liner, set liner plumb in well casing, located as necessary for cylinder installation. Provide dry, salt-free sand below and around liner to top of well casing.

2.3.5.3 Cylinder Installation

Remove all moisture from inside of cylinder liner. Install cylinder plumb, inside liner. Provide a 1/4 inch copper evacuation tube inside the PVC liner. The bottom of the evacuation tube, shall be within 6 inch of the bottom of the liner. Top of evacuation tube shall extend at least 6 inch above liner. Provide top of test tube with removable cap to exclude foreign matter. Provide separate air pressure fitting in liner to facilitate pressure test of liner as specified in paragraph PRESSURE TEST OF PVC LINER/CYLINDER ASSEMBLY. Secure Liner/Cylinder Assembly as recommended by cylinder manufacturer.

2.3.5.4 Pressure Test of PVC Liner/Cylinder Assembly

Perform 8 psig pressure test of liner/cylinder assembly. Perform the test of liner/cylinder assembly as a sealed unit. Provide safety relief valve, set to relieve at 10 psig. Provide 4.5 inch diameter dial pressure gage scaled for 0 to 50 psig and calibrated to 0.5 percent accuracy and an air pressure admission throttle and shutoff valve. For safety, pressure test shall only be performed when liner and cylinder are fully inserted and assembled in the well casing. Perform the test from remote location outside of the elevator pit. Perform test in the presence of, and witnessed by, a NAVFAC Certified Elevator Inspector.

2.3.5.5 Cylinder Liner Water and Oil Sensor System

Provide moisture sensor system designed to detect water and/or oil in the bottom of the cylinder liner. Water and oil sensors shall be located inside the cylinder liner and within 6 inches of the bottom of the liner. Water and oil senor system shall include a control and alarm panel, located in the elevator machine room. System shall provide automatic actuation of audible and visual alarms upon detection of either water or oil inside the cylinder liner.

2.3.5.6 Seal Top of Well Casing

Upon successful test and certification of PVC Liner/Cylinder assembly, seal gap between steel well casing and PVC liner with foam insert strong enough to retain and support final grouting. Provide 3000 psi grout to a minimum of 4 inch thickness and level top of final grouting with pit floor.

2.4 CONTROL EQUIPMENT

2.4.1 Motor Control Equipment

Provide elevator motor controller with electronic, soft-start motor starter. Enclose control equipment in factory-primed and baked-enamel coated sheet-metal cabinets with removable or hinged doors with ventilation louvers.

2.4.1.1 Electrical Isolation Protection

Provide individual isolation transformers and individual choke reactors for each individual motor. Provide filtering to maintain harmonic distortion below IEEE standards as measured at the elevator machine room disconnect.

2.4.2 Logic Control Equipment

Provide a non-proprietary microprocessor controller for each individual elevator and group controller. Store all programming in non-volatile memory. Provide a microprocessor control system that includes all hardware and software required to service and maintain the elevator and a technical support service that is routinely provided to any elevator service provider.

2.4.2.1 On-Board Diagnostic Panel

a. Provide, for each individual elevator microprocessor controller, an on-board diagnostic control and LCD display panel that allows unrestricted access to the comprehensive range of adjustable parameters necessary to perform installation, adjusting, service, maintenance, and testing of the elevator.

b. For each elevator group control, provide a separate on-board diagnostic control and LCD display panel that allows unrestricted access to the comprehensive range of options and adjustments necessary to perform installation, adjusting, service, maintenance, and testing of the elevator group.

c. For both individual and group controllers, provide fault log capability to store all fault logs for up to 1 year of elevator service history. The on-board LCD display shall provide the capability to display and monitor any and all fault logs, trouble calls, and fault history for up to 1 year of elevator service history. The on-board LCD display shall also provide the capability to display and diagnose trouble calls, faults, and shutdowns.

2.4.2.2 External Port

For each individual elevator microprocessor controller, and elevator group microprocessor controller, provide a USB port or an RS 232 port that allows connection to an on-site or a remote portable laptop computer. Provide unrestricted access as specified in paragraph ON-BOARD DIAGNOSTIC PANEL.

2.4.2.3 Maintenance and Diagnostic Software

Provide three copies of the manufacturer's maintenance and service diagnostic software, with complete software documentation, that shall enable the same level of unrestricted access to all controllers of the same make

and model, regardless of the installation date or location. Provide signed certification, from the manufacturer's corporate headquarters, that guarantees that the microprocessor software and access system will not terminate the unlimited and unrestricted access at any future date.

2.4.2.4 Acceptable Controller Suppliers

Provide microprocessor controller from one of the following controller manufacturers:

Elevator Controls Corporation 3525 La Grande Boulevard Sacramento, CA 95823
G.A.L. Manufacturing Corporation 50 East 153rd Street Bronx, New York 10451
Motion Control Engineering, Inc. 11354 Whiterock Road Rancho Cordova, CA 95742-6522
Virginia Controls, Inc. 2513 Mechanicsville Turnpike Richmond, Virginia 23223

2.5 OPERATING PANELS, SIGNAL FIXTURES, AND COMMUNICATIONS CABINETS

2.5.1 Capacity and Data Plates

Attach faceplates with spanner security screws. On car panel, provide stainless steel capacity and data plates, with name of elevator manufacturer.

2.5.2 Car and Hall Buttons

Provide recessed tamper-proof push buttons of minimum 3/4 inch size satin-finish stainless steel, with illuminating jewel center.

2.5.3 Hall Station Door Operating Buttons
Identical in size and design to hall call buttons, but not illuminating.

2.5.4 Passenger Car-Operating Panel
Provide each car with one car operating panel that contains operation controls and communication devices. Provide exposed, flush mounted buttons for the controls that must be passenger accessible. Provide service cabinet or keyed switches for those switches that should not be passenger accessible. Allow maximum 48 inch height between car floor and center line of top operating buttons. Allow 35 inch height between car floor and center line of bottom button. Use engraving and backfilling or photo etching for button and switch designations. Do not use attached signs.

2.6 PASSENGER CONTROLS

2.6.1 Passenger Car-Operating Panel

a. Illuminating operating call buttons identified to correspond to landings served by elevator car.

b. "DOOR OPEN" and "DOOR CLOSE" buttons.

c. Keyed "STOP" switch in accordance with ASME A17.1/CSA B44, rule 2.26.2.

d. "ALARM" button in compliance with UFAS, ADA, and ASME A17.1/CSA B44, Rule 2.27.1. Furnish a red alarm button with engraved legend "ALARM." Allow alarm button to illuminate when pushed. Locate "ALARM" button at panel bottom.

e. "FIRE DEPARTMENT" key switch, with "OFF-HOLD-ON" positions, in that order with key to be removable in all positions. Provide fire sign or jewel, and audible signal device, in accordance with ASME A17.1/CSA B44 Section 2.27.3. Both visual and audible signals are activated when Phase I key switch in hall is activated or when smoke detector activates return of elevator(s) to main fire response floor. Keep visual and audible signal activated until car has reached main or designated alternate fire response floor. Upon arrival at fire response floor visual signal remains illuminated and audible signal becomes silent.

f. Emergency two-way communication. Provide momentary pressure, single illuminating pushbutton operated communication device that complies with ASME A17.1/CSA B44, UFAS, and the Americans with Disabilities Act.

2.6.1.1 Service Controls

a. Inspection switch that transfers car control to top-of-car inspection operating controls and prevents car operation from in-car control panel.

b. Independent service switch.

c. Two car light switches, one for light in car and one for lights on top and bottom of car frame.

d. Fan switch, two-speed.

e. 120-volt ac 60 Hz single-phase duplex electrical outlet of ground-fault-circuit-interrupt (GFCI) design.

f. Device for communication between car and elevator machine room.

g. Parking switch.

2.6.1.2 Certificate Window

Provide 4 inch high by 6 inch wide certificate window in car operating panel for elevator inspection certificate.

2.6.2 Freight Car-Operating Panel

Provide 1/8 inch thick stainless steel face plate with edges relieved. Provide a car operating panel (COP) for each car at each car entrance. Provide exposed, flush mounted buttons for the controls that must be passenger accessible. Provide service cabinet or keyed switches for those controls that should not be passenger accessible. Allow maximum 48 inch height between car floor and center line of top operating button. Allow 35 inch height between car floor and center line of bottom button. Use engraving and backfilling or photo etching for button and switch designations. Do not use attached signs.

2.6.2.1 Passenger Controls

a. Illuminating operating call buttons identified to correspond to landings served by elevator car.

b. Manual "STOP" switch.

c. "ALARM" button in compliance with UFAS, ADA, and ASME A17.1/CSA B44, Section 2.27.1. Furnish a red alarm button with engraved legend "ALARM". Allow alarm button to illuminate when pushed. Locate "ALARM" button at panel bottom.

d. "FIRE DEPARTMENT" key switch, with "OFF-HOLD-ON" positions, in that order with key removable in all positions. Provide fire sign or jewel and audible signal device. Both visual and audible signals are activated when Phase I key switch in hall is activated or when smoke detector activates return of elevator(s) to main fire response floor. Keep visual and audible signal activated until car has reached designated or alternate fire response floor. Upon arrival at fire response floor visual signal remains illuminated and audible signal becomes silent.

e. Emergency two-way communication. Provide momentary pressure, single illuminating pushbutton operated communication device that complies with ASME A17.1/CSA B44, UFAS, and the Americans with Disabilities Act.

2.6.2.2 Service Controls

a. Inspection switch that transfers car control to top-of-car inspection operating controls and prevents car operation from in-car control panel.

b. Independent service switch.

c. Two car light switches, one for light in car and one for lights on top and bottom of car frame.

d. Fan switch, two-speed.

e. 120-volt ac 60 Hz single-phase duplex electrical outlet of ground-fault-circuit-interrupt (GFCI) design.

f. Communication device between car and elevator machine room.

g. Parking switch.

2.6.2.3 Certificate Window

Provide 4 by 6 inches, certificate window in car operating panel for elevator inspection certificate.

2.6.3 Semi-Selective Door Operation

For elevator with rear opening at elevations that differ from front opening, provide semi-selective door operation so that only car door or gate opposite hoistway door opens when car stops.

2.6.4 Full-Selective Door Operation

For elevator with one or more rear openings at same level as front opening, provide full-selective operation with car and door operating buttons clearly marked for front and rear openings, front and rear car button for each such floor, and front and rear "DOOR OPEN" and "DOOR CLOSE" buttons. Only door for which button was operated opens or closes.

2.6.5 Switches and Devices

Provide elevator manufacturer's standard grade for switches and devices on car operating panel. Legibly and indelibly identify each device and its operating positions. Locate car dispatching buttons in identical positions in car operating panels for corresponding floors.

2.6.6 In-Car Position and Direction Indicator and Signal

Include in-car direction indicator in the in-car position indicator fixture.

2.6.6.1 In-Car Position Indicator and Signal

Provide horizontal electrical or electronic digital position indicator located minimum of 84 inch above car floor. Arrange indicator to show floor position of car in hoistway and its traveling direction. Indicate position by illuminating of numeral or letter corresponding to landing at which car is passing or stopping. Provide audible signal to alert passenger that elevator is passing or stopping at a floor. Provide audible signals exceeding ambient noise level by at least 20 dbA with frequency not higher than 1500 Hz.

2.6.6.2 In-Car Direction Indicator and Signal

Provide visual and audible car direction indicators in car, indicating car traveling direction. For visual directional signal, provide arrow of minimum 2-1/2 inch in size. Use equilateral triangles for arrows, green for upward direction and red for downward direction. Provide audible signal that sounds once for upward direction and twice for downward direction.

2.6.7 Landing Position and Direction Indicator and Signal

Provide a single fixture containing the landing position and direction indicator.

2.6.7.1 Landing Position Indicator and Signal

Provide an electrical or electronic digital position indicator similar to the car position indicator. Arrange position indicator in wall horizontally above the door frame or vertically at the side of the door frame. Indicators to show floor position of car in hoistway. Indicate position by illumination of numeral or letter corresponding to landing at which car is passing or stopping.

2.6.7.2 Landing Direction Indicator and Signal

Provide landing direction indicator with visual and audible signal devices. Provide single direction indicator at terminal floors; "UP" and "DOWN" direction indicator at intermediate floors. Provide equilateral triangles minimum 2-1/2 inch in size, green for upward direction and red for downward direction. Provide electronic audible device that sounds once for upward direction and twice for downward direction. Provide audible signals exceeding ambient noise level by at least 20 decibels with frequency not higher than 1500 Hz.

2.7 HOISTWAY AND CAR EQUIPMENT

2.7.1 Guide Rails and Fastenings

Paint rail shanks with one coat black enamel. Only T-section type rail is acceptable.

2.7.2 Car Buffers

Provide buffer data plate on each buffer.

2.7.3 Pit Equipment

2.7.3.1 Pit "STOP" Switch

Provide push/pull type pit "STOP" switch for stopping elevator motor, independent of regular operating device. Locate on same side of hoistway as ladder.

2.7.3.2 Ladders
Provide galvanized steel ladder conforming to 29 CFR 1910.27 with minimum 7 inch distance between rung and wall. Locate ladder on hoistway side wall closest to hoistway door opening.

2.7.3.3 Lighting of Pits

Locate pit light not less than 6 feet above pit floor. Locate switch on same side of hoistway as ladder. Provide GFCI duplex receptacle in each pit.

2.8 TERMINAL STOPPING DEVICES

Provide each elevator with a terminal stopping device.

2.8.1 Wiring and Traveling Cables

Suspend traveling cables by means of self-tightening webbed devices.

2.8.2 Emergency Signaling Device

Provide audible signaling device, operable from Car Operating Panel button marked "ALARM". Mount the audible signaling device in hoistway. In addition, for freight elevators, operation of the EMERGENCY STOP button must sound an audible signaling device.

2.9 PASSENGER CAR AND HOISTWAY DOOR ACCESSORIES

ASME A17.1/CSA B44, Sections 2.12, 2.13, 2.14, and 3. Provide infra-red curtain unit (ICU) with multiple infra-red beams that protect to the full height of the door opening. Extend minimum coverage from 2 inches off the floor to 70 inch above floor level. Door operation must meet the requirements of ASME A17.1/CSA B44 Rule 2.27.1 and 2.13.5. Provide high-speed electric operator, safety interlocks for car and hoistway doors, and electric safety contact to prevent car operation unless doors are closed.

2.10 PASSENGER ELEVATOR GUIDES, FRAME, PLATFORM, AND ENCLOSURE
2.10.1 Roller Guides

Provide roller guide assemblies in adjustable mountings on each side of car in accurate alignment at top and bottom of car frame.

2.10.2 Car Enclosure, Car Door, and Car Illumination
Provide natural and forced ventilation, stainless steel hooks, with fire retardant pads.

2.10.2.1 Return Panels, Entrance Columns, Cove Base, and Transom

Provide 14 gauge minimum non perforated steel. Apply sound-deadening mastic on car shell and all exterior components.

2.10.2.2 Car Top

Provide reinforced 12 gauge minimum steel with hinged emergency exit openable by hand from car top only. Provide electrical contact which prevents operation of elevator when emergency exit is open. Provide sound-deadening mastic on all exterior components.

2.10.2.3 Car Door

Provide 16 gauge minimum steel, sandwich construction without binder angles. Provide a minimum of 2 door guide assembles per door panel, one guide at leading and one at trailing door edge with guides in the sill groove their entire length of travel.

2.10.2.4 Car Entrance Sill

Provide one piece cast white bronze or nickel silver entrance sill. Set sills level and flush with floor finish. Use same material for hoistway and car entrance sills.

2.10.2.5 Carpet

Unless otherwise specified, install carpet in the elevator.

2.11 PASSENGER ELEVATOR HOISTWAY DOORS AND ENTRANCES

Provide hoistway entrance assemblies which have a minimum 1-1/2 hour fire rating.

2.11.1 Hoistway Entrance Frames

Frame of 14 gauge thick stainless steel. Solidly grout uprights of entrances to height of 5 feet.

2.11.2 Hoistway Entrance Sills

Provide one-piece cast solid white bronze or nickel silver entrance sills. After sill is set level and flush with finished floor height, solidly grout under full length of sill. Use same material for hoistway and car door sills.

2.11.3 Hoistway Entrance Doors

Provide hoistway entrance door constructed with hollow metal non-vision construction with flush surfaces on car and landing sides. Provide a minimum of 2 door guide assembles per door panel, one guide at leading edge and one at trailing door edge with guides in the sill groove the entire length of travel.

2.11.4 Entrance Fascias and Dust Covers

Provide sheet metal hoistway door track dust covers at each landing. Dust covers must cover door locks and door roller tracks and extend the full width of the door track and associated hardware.

2.11.5 Hoistway Ventilation

Provide hoistway ventilation directly to outside air by fixed louver through side wall of hoistway at top of hoistway. The net size of the louver shall be a minimum of 3.5 percent of the cross section of hoistway.

2.12 FREIGHT ELEVATOR GUIDE SHOES, PLATFORM, AND ENCLOSURE

2.12.1 Roller Guides

Provide roller guide assemblies in adjustable mounting on each side of car in accurate alignment at top and bottom of car frame.

2.12.2 Car Enclosure

Complete with two-section gate, power gate operator, emergency exit, emergency light, and lighting fixtures. Paint interior and exposed surfaces with manufacturer's standard finish. Provide certificate frame and recessed car station.

2.13 FREIGHT ELEVATOR HOISTWAY DOORS AND ENTRANCES

Provide hoistway entrance with complete door assembly including door panels with truckable sill, frames, guide rails, and accessories. Provide hoistway entrance assemblies which have a minimum 1-1/2 hour fire rating.

2.13.1 Door Panel

NFPA 252, fire rated door panel, with minimum 4 inch wide by 9 inch high vision panel at upper door section.

2.13.2 Door Operation
Full-selective.

2.14 HANDICAPPED AND MEDICAL SERVICES ACCESS

2.14.1 Provision For Handicapped
Refer to 36 CFR 1191, Sections 4.10 for Elevators, 4.30 for Signage, and 4.31 for Telephones.

2.14.2 Emergency Medical Service
ICC IBC - Chapter 30, for elevators and signage.

2.15 EMERGENCY POWER OPERATION
Upon outage of normal power and initiation of emergency power, provide circuitry and wiring to operate elevator telephone and intercom to accomplish operation sequences. For single elevator system, elevator travels automatically to main floor, opens doors, and automatically places itself in regular service. During emergency power operation, provide a sign reading "EMERGENCY POWER" flashing in each car station. At the same time, provide operable Firefighters' Service.

PART 3 EXECUTION

3.1 INSTALLATION

Install in accordance with manufacturer's instructions, ASME A17.1/CSA B44, 36 CFR 1191, and NFPA 70.

3.1.1 Traveling Cables

Do not allow abrupt bending of traveling cables.

3.1.2 Automatic Shutoff Valve

Locate in supply-return line, as close as possible to cylinder-plunger unit.

3.1.3 Structural Members

Do not cut or alter. Restore any damaged or defaced work to original condition.

3.1.4 Safety Guards

Completely enclose selector cables or tapes exposed to possibility of accidental contact in machine room with 16 gage thick sheet metal or expanded metal guards, both horizontally and vertically. Protect exposed gears, sprockets, and selector drums from accidental contact in accordance with ASME A17.1/CSA B44.

3.1.5 Other Requirements

Include recesses, cutouts, slots, holes, patching, grouting, and refinishing to accommodate elevator installation. Use core drilling to drill all new holes in concrete. Finish work to be straight, level, and plumb. During

installation, protect machinery and equipment from dirt, water, or mechanical damage. At completion, clean all work, and spot paint. Completion of firefighters' service includes installation and wiring of all smoke detectors in accordance with ASME A17.1/CSA B44, Section 2.27.3.2. Coordinate smoke detector installation for firefighters' service.

3.2 FIELD QUALITY CONTROL

a. After completing elevators system installation, notify Contracting Officer that elevator system is ready for final inspection and acceptance test. In conjunction with the notification submit a plan detailing the testing procedures 60 days prior to performing the elevator tests. Contracting Officer will obtain services of Naval Facilities Engineering Command certified elevator inspector.

b. Perform all required tests and demonstrate proper operation of each elevator system and prove that each system complies with contract requirements and ASME A17.1/CSA B44. Inspection procedures in ASME A17.2 form a part of this inspection and acceptance testing. Conduct all testing and inspections in the presence of both the Elevator Specialist and the Elevator Inspector. Demonstrate the proper operation of all equipment at various date settings, selected by the Elevator Inspector, ranging from the date of contract award through 1 January 2099.

c. The Elevator Inspector shall complete, sign and post the results of all tests and inspection results and form NAVFACENGCOM 9-11014/23 (Rev. 7-88), Elevator Inspection Certificate after successful completion of inspection and testing. The Contractor is responsible for all costs involved with reinspection and retesting required to correct discrepancies discovered during testing and the subsequent retesting required, including all costs and expenses incurred by the Government Furnished Inspector.

3.2.1 Testing Materials and Instruments

Provide testing materials and instruments required for final inspection. Include calibrated test weights, tachometer, 600-volt megohm meter, volt meter and ammeter, three Celsius calibrated thermometers, door pressure gage, spirit level, stop watch, hydraulic pressure test gauge, and a 100 foot tape measure.

3.2.2 Field Tests

Submit Field Tests Reports after completing each of the specified tests, as required in the Submittals paragraph.

3.2.2.1 Endurance Tests

Test each elevator for a period of one hour continuous run, with specified rated load in the car. Restart the one hour test period from beginning, following any shutdown or failure. During the test run, stop car at each floor in both directions of travel for standing period of 10 seconds per floor. The requirements for Rated Speed, Leveling, Temperature Rise, and Motor Amperes testing specified herein must be met throughout the duration of the Endurance test.

3.2.2.2 Automatic Shutoff Valve Tests

Test the automatic shutoff valve twice. Once at beginning of acceptance test and again at conclusion of one-hour Endurance test to ensure consistent performance of shutoff valve, regardless of temperature of equipment and oil.

3.2.2.3 Speed Tests

Determine actual speed of each elevator in both directions with rated load and with no load in elevator car. Make Speed tests before and immediately after Endurance test. Determine speed by tachometer reading, excluding accelerating and slow-down zones in accordance with ASME A17.2, Section 2.22.4. Minimum acceptable speed is the Rated Speed as specified. Maximum acceptable elevator speed is 110 percent of Rated Speed.

3.2.2.4 Leveling Tests

Test elevator car leveling devices for landing accuracy of plus or minus 1/4 inch at each floor with no load in car, symmetrical load in car, and with rated load in car in both directions of travel. Determine accuracy of floor landing both before and immediately after endurance tests.

3.2.2.5 Pressure Tests

Check operating pressure at pump and cylinder head under no load and rated load. Test pressure at which relief valve operates.

3.2.2.6 Insulation Resistance Tests

Perform tests to ensure wiring systems free from short circuits and grounds. Minimum acceptable insulation resistance for electrical conductors is one megohm between each conductor and ground and between each conductor and other conductors. Prior to megohm meter test, make provision to prevent damage to the electronic devices.

3.2.2.7 Temperature Rise Tests

Determine the temperature rise of the hydraulic pump motor during the full load test run for a minimum of one hour. Under these conditions, do not exceed maximum acceptable temperature rise indicated on the manufacturer's data plate. Start test only when equipment is within 5 degrees C of ambient temperature.

3.2.2.8 Motor Ampere Tests

Measure and record motor amperage when motor is running and elevator is lifting at rated load and speed. Measure and record motor amperage at the beginning and the end of Endurance test.

3.3 OPERATION AND MAINTENANCE TRAINING

The Elevator Specialist shall instruct Government personnel in care, adjustment, and maintenance of elevator equipment for a period of not less than 5 working days immediately following acceptance of system. Submit Operation and Maintenance Manuals as required in the Submittals paragraph.

-- End of Section --

THIS PAGE HAS BEEN INTENTIONALLY LEFT BLANK

SECTION 23 08 00.00 10

COMMISSIONING OF HVAC SYSTEMS
01/08

PART 1 GENERAL

1.1 REFERENCES

The publications listed below form a part of this specification to the extent referenced. The publications are referred to within the text by the basic designation only.

ASSOCIATED AIR BALANCE COUNCIL (AABC)

ACG Commissioning Guideline	(2005) Commissioning Guideline

NATIONAL ENVIRONMENTAL BALANCING BUREAU (NEBB)

NEBB Commissioning Standard	(2009) Procedural Standards for Whole Building Systems Commissioning of New Construction; 3rd Edition

1.2 DEFINITIONS

In some instances, terminology differs between the Contract and the NEBB Commissioning Standard primarily because the intent of this Section is to use the industry standards specified, along with additional requirements listed herein to produce optimal results. Contract requirements take precedent over the corresponding Commissioning Standard requirements where differences exist.

1.3 SYSTEM DESCRIPTION

1.3.1 General

Commissioning will be performed in accordance with the requirements of the ACG Commissioning Guideline and NEBB Commissioning Standard, unless otherwise stated herein. Consider mandatory all recommendations and suggested practices contained in the Commissioning Standard. Use the Commissioning Standard for all aspects of Commissioning, including calibration of Commissioning instruments. Where the instrument manufacturer calibration recommendations are more stringent than those listed in the Commissioning Standard, the manufacturer's recommendations shall be adhered to. All quality assurance provisions of the Commissioning Standard such as performance guarantees shall be part of this contract. For systems or system components not covered in the Commissioning Standard, Commissioning procedures shall be developed by the Commissioning Agent.

1.3.2 Energy

Formal LEED NC certification is not required; however, the Commissioning Agent is required to provide documentation that meets the LEED NC Energy & Atmosphere (EA) Prerequisite 1, Fundamental Commissioning. For New Construction and Major Revisions provide, also, documentation that meets EA Credit 3; Enhanced Commissioning. Provide documentation for as many

LEED credits as possible to support LEED Silver certification of the project.

1.4 SUBMITTALS

Government approval is required for submittals with a "G" designation; submittals not having a "G" designation are for information only. Submit the following in accordance with Section 01 33 00.05 20 CONSTRUCTION SUBMITTAL PROCEDURES:

SD-02 Shop Drawings

Commissioning Plan; G,

SD-03 Product Data

Pre-Functional Performance Test Checklists; G
Functional Performance Tests; G,

SD-06 Test Reports

Commissioning Report; G

SD-07 Certificates

Commissioning Firm; G
Commissioning Agent; G

1.5 QUALITY ASSURANCE

1.5.1 Commissioning Firm

The commissioning firm is certified by the NEBB or ACG and certified in all categories and functions where measurements or performance are specified on the plans and specifications.

1.5.2 Commissioning Agent

1.5.2.1 General

The Commissioning Agent, is certified as a commissioning professional by the Associated of Energy Engineers (AEE), the Building Commissioning Association (BCA), the National Environmental Balancing Bureau (NEBB), the AABC Commissioning Group (ACG), or the University of Wisconsin - Madison (UWM)

1.5.2.2 Responsibilities

Perform all Commissioning work specified herein and in related sections under the direct guidance of the Commissioning Agent. The Commissioning Agent shall prepare, no later than 28 days after the contract award, the Commissioning Plan which will be a comprehensive schedule and will include all submittal requirements for procedures, notifications, reports and the Commissioning Report. After approval of the Commissioning Plan, revise the Contract NAS schedule to reflect the schedule requirements in the Commissioning Plan.

1.5.2.3 CA Responsibilities

The CA is responsible for verification of compliance with the Cx Plan and the review of Cx checklists and reports. This shall involve coordinating and directing the Cx activities in a logical, sequential, and efficient manner using consistent protocols and forms, centralized documentation, clear and regular communications and consultations with all necessary parties, frequently updated timelines and schedules, and technical expertise. All submittals applicable to systems being commissioned shall be reviewed and evaluated by the CA for compliance with Cx needs and the Contract documents. The CA shall ensure proper coordination and submission of all documents. During construction, the CA shall perform site visits as necessary to observe component and system installations; attend selected planning and job-site meetings to obtain information on construction progress; review construction meeting minutes for potential revisions or substitutions related to the Cx process; and assist in resolving any discrepancies.

1.5.2.4 Contractor Responsibilities

The Contractor shall include the cost of Cx coordination, prefuntional check, and testing support in the contract price, including the cost of sheaves and belts that may be required by testing, adjusting, and balancing (TAB). The contractor shall include the cost of a controls technician and TAB technician for the duration of functional testing and any retesting. In each subcontract written, requirements for submittal data, Cx documentation, shall be included by the Contractor. During construction, the Contractor shall maintain as-built red-line drawings for all drawings and final CAD as-builts for contractor-generated coordination drawings. These drawings shall be updated after completion of Cx (excluding deferred testing). The Contractor shall perform the Pre-Functional Checklists prior to the start of functional testing.

1.6 SEQUENCING AND SCHEDULING

Begin the work described in this Section only after all work required in related Sections has been successfully completed, and all test and inspection reports required in these Sections have been submitted and approved. Pre-Functional Performance Test Checklists shall be performed at appropriate times during the construction phase of the Contract by the Contractor..

PART 2 PRODUCTS

Not Used

PART 3 EXECUTION

3.1 COMMISSIONING TEAM AND TEST FORMS AND CHECKLISTS

Designate Contractor team members to participate in the Pre- Functional Performance Test Checklists and the Functional Performance Tests specified herein. In addition, the Government team members will include a representative of the Contracting Officer, the Design Agent's Representative, and the Using Agency's Representative. The team members shall be as follows:

Designation	Function
A	Commissioning Agent
M	Contractor's Mechanical Representative
E	Contractor's Electrical Representative
T	Contractor's Testing, Adjusting, and Balancing (TAB) Specialist
C	Contractor's Controls Representative
D	Designer of Record
O	Contracting Officer's Representative
U	Using Agency's Representative

Appendix A shall be completed by the Contractor. Acceptance by each commissioning team member of each Pre- Functional Performance Test Checklist item shall be indicated by initials and date unless an "X" is shown indicating that participation by that individual is not required. Acceptance by each commissioning team member of each functional performance test item shall be indicated by signature and date.

3.2 TESTS

The Contractor shall perform the pre-functional performance test checklists and functional performance tests in a manner that essentially duplicates the checking, testing, and inspection methods established in the related Sections. Where checking, testing, and inspection methods are not specified in other Sections, establish methods which will provide the information required. Testing and verification required by this section shall be performed during the Commissioning phase. Requirements in related Sections are independent from the requirements of this Section and shall not be used to satisfy any of the requirements specified in this Section. Provide all materials, services, and labor required to perform the functional performance tests. A functional performance test shall be aborted if any system deficiency prevents the successful completion of the test or if any participating non-Government commissioning team member of which participation is specified is not present for the test.

3.2.1 Pre-Functional Performance Test Checklists

The Contractor shall perform Pre-Functional Performance Test Checklists, including, but not limited to, the items indicated in Appendix A at least 21 days prior to the start of Pre-Functional Performance Testing. The Contractor shall edit the Pre-Functional Performance Test Checklists as necessary to reflect and augment the manufacturer's start-up checklist. Correct and re-inspect deficiencies discovered during these checks in accordance with the applicable contract requirements. Submit the schedule for testing at least 14 days prior to the start of Functional Performance Tests.

3.2.2 Functional Performance Tests

The Commissioning Agent will submit test procedures at least 28 days prior

to the start of Functional Performance Tests. CA submits the schedule for the tests at least 14 days prior to the start of Functional Performance Tests. Begin Functional Performance Tests only after all Pre-Functional Performance Test Checklists have been successfully completed. Tests shall prove all modes of the sequences of operation, and shall verify all other relevant contract requirements. Begin Tests with equipment or components and progress through subsystems to complete systems. Upon failure of any Functional Performance Test item, correct all deficiencies in accordance with the applicable contract requirements. The item shall then be retested until it has been completed with no errors.

3.3 COMMISSIONING REPORT

The Commissioning Agent will submit the Commissioning Report, after completion of Functional Performance Tests, consisting of completed Pre-Functional Performance Test Checklists and completed Functional Performance Tests organized by system and by subsystem and submitted as one package. The Commissioning Report shall also include all HVAC systems test reports, inspection reports (Preparatory, Initial and Follow-up inspections), start-up reports, TAB report, TAB verification report, Controls start-up test reports and Controls Performance Verification Test (PVT) report. The results of failed tests shall be included along with a description of the corrective action taken.

APPENDIX A

PRE-FUNCTIONAL PERFORMANCE TEST CHECKLISTS

Pre-Functional Performance Test Checklist - Multizone Air Handling Unit

For Air Handling Unit: _____

Checklist Item	A	M	E	T	C	O
Installation						
a. Inspection and access doors are operable and sealed.	___	___	X	___	X	___
b. Condensate drainage is unobstructed. (Visually verify pan drains completely by pouring a cup of water into drain pan.)	___	___	X	X	X	___
c. Fan belt adjusted.	___	___	X	___	X	___
Electrical	A	M	E	T	C	O
a. Power available to unit disconnect.	___	X	___	X	X	___
b. Power available to unit control panel.	___	X	___	X	X	___
c. Proper motor rotation verified.	___	X	___	___	X	___
d. Verify that power disconnect is located within sight of the unit it controls.	___	X	___	X	X	___
e. Power available to electric heating coil.	___	X	___	X	X	___
Coils	A	M	E	T	C	O
a. Chilled water piping properly connected.	___	___	X	X	X	___
a. Refrigerant piping properly connected.	___	___	X	X	X	___
b. Hot water piping properly connected.	___	___	X	X	X	___
b. Steam and condensate piping properly connected.	___	___	X	X	X	___
Controls	A	M	E	T	C	O
a. Control valves/actuators properly installed.	___	X	X	X	___	___
b. Control valves/actuators operable.	___	X	X	X	___	___
c. O/A dampers/actuators properly installed.	___	X	X	X	___	___
d. O/A dampers/actuators operable.	___	X	X	X	___	___

Pre-Functional Performance Test Checklist - Multizone Air Handling Unit (cont)

	A	M	E	T	C	O

e. Zone dampers/actuators properly installed & dampers leak checked.	___	X	X	X	___	___
f. Zone dampers/actuators operable.	___	X	X	X	___	___

Testing, Adjusting, and Balancing (TAB)	A	M	E	T	C	O
a. Construction filters removed and replaced.	___	___	X	___	X	___
b. TAB report approved.		___	X	X	___	X

Pre-Functional Performance Test Checklist - Variable Volume Air Handling Unit

For Air Handling Unit: _____

Checklist Item	A	M	E	T	C	O
Installation						
a. Inspection and access doors are operable and sealed.	___	___	X	___	X	___
b. Condensate drainage is unobstructed. (Visually verify drainage by pouring a cup of water into drain pan.)	___	___	X	X	X	___
c. Fan belt adjusted.	___	___	X	___	X	___
Electrical	A	M	E	T	C	O
a. Power available to unit disconnect.	___	X	___	X	X	___
b. Power available to unit control panel.	___	X	___	X	X	___
c. Proper motor rotation verified.	___	X	___	___	X	___
d. Verify that power disconnect is located within sight of the unit it controls.	___	X	___	X	X	___
e. Power available to electric heating coil.	___	X	___	X	X	___
Coils	A	M	E	T	C	O
a. Chilled water piping properly connected.	___	___	X	X	X	___
a. Refrigerant piping properly connected.	___	___	X	X	X	___
b. Hot water piping properly connected.	___	___	X	X	X	___
b. Steam and condensate piping properly connected.	___	___	X	X	X	___

Pre-Functional Performance Test Checklist - Variable Volume Air Handling Unit

Controls	A	M	E	T	C	O
a. Control valves/actuators properly installed.	___	X	X	X	___	___
b. Control valves/actuators operable.	___	X	X	X	___	___
c. Dampers/actuators properly installed.	___	X	X	X	___	___
d. Dampers/actuators operable.	___	X	X	X	___	___
e. Verify proper location, installation and calibration of duct static pressure sensor.	___	X	X	X	___	___
f. Fan air volume controller operable.	___	X	X	X	___	___
g. Air handler controls system operational.	___	X	X	X	___	___

Testing, Adjusting, and Balancing (TAB)	A	M	E	T	C	O
a. Construction filters removed and replaced.	___	___	X	___	___	___
b. TAB report approved.	___	X	X	___	X	___

Pre-Functional Performance Test Checklist - VAV Terminal

For VAV Terminal: _____

Checklist Item	A	M	E	T	C	O
Installation						
a. Reheat coil connected to hot water pipe.	___	___	X	___	X	___
b. Electric reheat coil connected to local disconnect.	___	X	___	___	X	___

Controls	A	M	E	T	C	O
a. Cooling only VAV terminal controls set.	___	X	X	X	___	___
b. Cooling only VAV controls verified.	___	X	X	X	___	___
c. Reheat VAV terminal controls set.	___	X	X	X	___	___
d. Reheat terminal/coil controls verified.	___	X	X	X	___	___

Testing, Adjusting, and Balancing (TAB)	A	M	E	T	C	O
a. TAB report approved.	___	___	X	___	X	___

Pre-Functional Performance Test Checklist - DX Air Cooled Condensing Unit

For Condensing Unit: _____

Checklist Item	A	M	E	T	C	O
Installation						
a. Check condenser fans for proper rotation.	___	___	X	___	X	___
Electrical	A	M	E	T	C	O
a. Power available to unit disconnect.	___	X	___	X	X	___
b. Power available to unit control panel.	___	X	___	X	___	___
c. Verify that power disconnect is located within sight of the unit it controls	___	X	___	X	___	___
Controls	A	M	E	T	C	O
a. Unit safety/protection devices tested.	___	___	X	X	___	___
b. Control system and interlocks installed.	___	___	X	X	___	___
c. Control system and interlocks operational.	___	___	X	X	___	___

Pre-Functional Performance Test Checklist - Pumps

For Pump: _____

Checklist Item	A	M	E	T	C	O
Installation						
a. Piping system installed.	___	___	X	X	X	___

Electrical	A	M	E	T	C	O
a. Power available to pump disconnect.	___	X	___	X	X	___
b. Pump rotation verified.	___	X	___	X	X	___
c. Control system interlocks functional.	___	X	___	X	___	___

Testing, Adjusting, and Balancing (TAB)	A	M	E	T	C	O
a. Pressure/temperature gauges installed.	___	___	X	___	X	___
b. TAB Report approved.	___	___	X	___	X	___

Pre-Functional Performance Test Checklist - Packaged Air Cooled Chiller

For Chiller: _____

Checklist Item	A	M	E	T	C	O
Installation						
a. Chiller properly piped.	___	___	X	___	___	___
Electrical	A	M	E	T	C	O
a. Power available to unit disconnect.	___	X	___	X	___	___
b. Power available to unit control panel.	___	X	___	X	___	___
c. Separate power is supplied to electric heating tape.	___	X	___	X	___	___
d. Verify that power disconnect is located within sight of the unit it controls.	___	X	___	X	___	___
Controls	A	M	E	T	C	O
a. Factory startup and checkout complete.	___	___	X	X	___	___
b. Chiller safety/protection devices tested.	___	___	X	X	___	___
c. Chilled water flow switch installed.	___	___	X	X	___	___
d. Chilled water flow switch tested.	___	___	X	X	___	___
e. Chilled water pump interlock installed.	___	___	X	X	X	___
f. Chilled water pump interlock tested.	___	___	___	X		

Pre-Functional Performance Test Checklist - Centrifugal Chiller

For Chiller: _____

Checklist Item

Installation	A	M	E	T	C	O
a. Chilled water connections properly piped.	___	___	X	___	___	___
b. Condenser water connections properly piped	___	___	X	___	___	___
c. Refrigerant leak detector installed.	___	___	___	___	___	___
d. Oxygen sensor installed and tested.	___	___	___	___	___	___
e. Mechanical room ventilation installed as specified.	___	___	___	___	___	___

Electrical	A	M	E	T	C	O
a. Power available to unit starter.	___	X	___	X	___	___
b. Power available to unit control panel.	___	X	___	X	___	___
c. Verify that power disconnect is located within sight of the unit it controls.	___	X	___	X	___	___

Controls	A	M	E	T	C	O
a. Factory startup and checkout complete.	___	___	X	X	___	___
b. Chiller safety/protection devices tested.	___	___	___	X	___	___
c. Chilled water flow switch installed and tested.	___	___	X	X	___	___
e. Chilled water pump interlock installed and tested.	___	___	___	X	___	___
g. Condenser water flow switch installed and tested.	___	___	___	X	___	___
i. Condenser water pump interlock installed and tested.	___	___	___	X	___	___

Pre-Functional Performance Test Checklist - Cooling Tower

For Cooling Tower: _____

Checklist Item

Installation	A	M	E	T	C	O
a. Cooling tower properly piped.	___	___	X	X	___	___
b. Cooling tower fan drive adjusted.	___	___	___	___	X	___
c. Cooling tower makeup water supply piped.	___	___	X	X	___	___
d. Verify makeup control valve shutoff.	___	___	X	___	X	___
e. Fan lubricated and blade pitch adjusted.	___	___	X	___	X	___

Electrical	A	M	E	T	C	O
a. Power available to tower disconnect.	___	X	___	X	___	___
b. Power available to electric sump heater.	___	X	___	X	___	___
c. Control system interlocks functional.	___	___	___	X	___	___
d. Motor and fan rotation checked.	___	X	___	X	___	___
e. Verify that power disconnect is located within sight of the unit is controls.	___	X	___	X	___	___

Piping	A	M	E	T	C	O
a. Condenser water treatment functional.	___	___	X	X	X	___
b. All required temperature sensing wells, pressure ports and flow sensors have been installed for performance tests.	___	___	___	___	___	___

Testing, Adjusting, and Balancing (TAB)	A	M	E	T	C	O
a. TAB report approved.	___	___	X	___	X	_____

Pre-Functional Performance Test Checklist - Hot Water Boiler

For Boiler: _____

Checklist Item

Installation	A	M	E	T	C	O
a. Boiler hot water piping installed.	___	___	X	___	___	___
b. Boiler makeup water piping installed.	___	___	X	___	___	___
c. Boiler fuel oil piping installed.	___	___	X	X	X	___
d. Boiler gas piping installed.	___	___	X	X	X	___

Startup	A	M	E	T	C	O
a. Boiler safety/protection devices, including high temperature burner shut-off, low water cutoff, flame failure, pre- and post-purge, have been tested.	___	___	___	X	___	___
b. Verify that PRV rating conforms to boiler rating.	___	___	___	X	___	___
c. Boiler water treatment system functional.	___	___	X	X	___	___
d. Boiler startup and checkout complete.	___	___	X	X	___	___
e. Combustion efficiency demonstrated.	___	___	X	___	X	___

Electrical	A	M	E	T	C	O
a. Verify that power disconnect is located within sight of the unit served.	___	X	___	X	___	___

Controls	A	M	E	T	C	O
a. Hot water pump interlock installed and tested.	___	___	___	X	___	___
b. Hot water proof-of-flow switch installed and tested	___	___	X	X	___	___
c. Hot water heating controls operational.	___	___	X	X	___	___

Testing, Adjusting, and Balancing (TAB)	A	M	E	T	C	O
a. TAB report approved.	___	___	X	___	X	___

Pre-Functional Performance Test Checklist - Steam Boiler

For Boiler: _____

Checklist Item

Installation	A	M	E	T	C	O
a. Boiler steam piping installed.	___	___	X	X	X	___
b. Boiler makeup water piping installed.	___	___	X	___	X	___
c. Boiler fuel oil piping installed.	___	___	X	X	X	___
d. Boiler gas piping installed.	___	___	X	X	X	___

Startup	A	M	E	T	C	O
a. Boiler safety/protection devices, including high temperature burner shut-off, low water cutoff, flame failure, pre and post purge, have been tested.	___	___	___	X	___	___
b. Verify that PRV rating conforms to boiler rating.	___	___	___	X	___	___
c. Boiler feed water system operational.	___	___	___	X	___	___
d. Boiler water treatment system functional.	___	___	X	X	X	___
e. Boiler startup and checkout complete.	___	___	___	X	___	___
f. All steam traps operational.	___	___	X	X	X	___
g. All condensate return pumps operational.	___	___	___	___	X	___
h. Combustion efficiency demonstrated.	___	___	X	___	X	___

Electrical	A	M	E	T	C	O
a. Verify that power disconnect is located within sight of the unit served.	___	X	___	X	___	___

Testing, Adjusting, and Balancing (TAB)	A	M	E	T	C	O
a. TAB report approved.	___	___	X	___	X	___

Pre-Functional Performance Test Checklist - Steam/Hot Water Converter

For Converter: _____

Checklist Item

Installation	A	M	E	T	C	O
a. Converter steam piping installed.	___	___	X	___	X	___
b. Hot water piping installed.	___	___	X	___	___	___
c. Makeup water piping installed.	___	___	X	X	X	___
d. Vacuum breaker installed on shell of shell and tube unit.	___	___	X	X	X	___

Startup	A	M	E	T	C	O
a. All steam traps operational.	___	___	X	X	X	___
b. All condensate return pumps operational.	___	___	___	X	___	___
c. Converter safety/protection devices tested.	___	___	X	X	X	___
d. Converter startup and checkout complete.	___	___	X	X	X	___

Controls	A	M	E	T	C	O
a. Control valves/actuators properly installed.	___	___	X	___	___	___
b. Control valves/actuators operable.	___	___	X	___	___	___

Pre-Functional Performance Test Checklist - Fan Coil Unit

For Fan Coil Unit: _____

Checklist Item

Installation	A	M	E	T	C	O
a. Access doors/removable panels are operable and sealed.	___	___	X	___	X	___
b. Condensate drainage is unobstructed.	___	___	X	X	X	___
c. Fan belt adjusted.	___	___	X	___	X	___

Electrical	A	M	E	T	C	O
a. Power available to unit disconnect.	___	___	___	X	___	___
b. Power available to unit control panel.	___	___	___	X	___	___
c. Proper motor rotation verified.	___	___	___	___	X	___
d. Verify that power disconnect is located within sight of the unit it controls.	___	___	___	X	___	___
e. Power available to electric heating coil.	___	___	___	X	X	___

Coils	A	M	E	T	C	O
a. Dual temperature piping properly connected.	___	___	X	___	___	___
b. Chilled water piping properly connected.	___	___	X	X	X	___
c. Hot water piping properly connected.	___	___	X	___	___	___

Controls	A	M	E	T	C	O
a. Control valves/actuators properly installed.	___	___	X	___	___	___
b. Control valves/actuators operable.	___	___	X	X	___	___
c. Verify proper location and installation of thermostat.	___	___	X	___	___	___

Testing, Adjusting, and Balancing (TAB)	A	M	E	T	C	O
a. TAB Report approved.	___	___	X	___	X	___

Pre-Functional Performance Test Checklist - Unit Heater

For Unit Heater: _____

Checklist Item

Installation	A	M	E	T	C	O
a. Hot water piping properly connected.	___	___	X	___	___	___
a. Steam and condensate piping properly connected.	___	___	X	X	X	___

Electrical	A	M	E	T	C	O
a. Power available to unit disconnect.	___	___	___	X	___	___
b. Proper motor rotation verified.	___	___	___	X	X	___
c. Verify that power disconnect is located within sight of the unit it controls.	___	___	___	X	___	___
d. Power available to electric heating coil.	___	___	___	X	___	___

Controls	A	M	E	T	C	O
a. Control valves properly installed.	___	___	X	___	___	___
b. Control valves operable.	___	___	X	X	___	___
c. Verify proper location and installation of thermostat.	___	___	X	___	___	___

Testing, Adjusting, and Balancing (TAB)	A	M	E	T	C	O
a. TAB Report approved.	___	___	X	___	X	___

Pre-Functional Performance Test Checklist - Exhaust Fan

For Exhaust Fan: _____

Checklist Item

Installation	A	M	E	T	C	O
a. Fan belt adjusted.	___	___	X	___	X	___

Electrical	A	M	E	T	C	O
a. Power available to fan disconnect.	___	___	___	X	___	___
b. Proper motor rotation verified.	___	___	___	___	X	___
c. Verify that power disconnect is located within sight of the unit it controls.	___	___	___	X	___	___

Controls	A	M	E	T	C	O
a. Control interlocks properly installed.	___	___	___	X	___	___
b. Control interlocks operable.	___	___	___	X	___	___
c. Dampers/actuators properly installed.	___	___	X	___	___	___
d. Dampers/actuators operable.	___	___	X	___	___	___
e. Verify proper location and installation of thermostat.	___	___	X	___	___	___

Testing, Adjusting, and Balancing (TAB)	A	M	E	T	C	O
a. TAB Report approved.	___	___	X	___	X	___

Pre-Functional Performance Test Checklist - Computer Room Unit

For Computer Room Unit: _____

Checklist Item

Installation	A	M	E	T	C	O
a. Access doors are operable and sealed.	___	___	X	___	X	___
b. Condensate drainage is unobstructed and routed to floor drain.	___	___	X	X	X	___
c. Fan belt adjusted.	___	___	X	___	X	___

Electrical	A	M	E	T	C	O
a. Power available to unit disconnect.	___	X	___	X	X	___
b. Proper motor rotation verified.	___	X	___	___	X	___
c. Proper motor rotation verified.	___	X	___	___	X	___
d. Verify that power disconnect is located within sight of the unit it controls.	___	X	___	X	___	___
e. Power available to reheat coils.	___	X	___	___	X	___

Coils/Humidifier	A	M	E	T	C	O
a. Chilled water piping properly connected.	___	___	X	___	___	___
a. Refrigerant piping properly connected.	___	___	X	X	X	___
b. Hot water piping properly connected.	___	___	X	___	___	___
b. Steam piping properly connected.	___	___	X	X	X	___
c. Humidifier makeup water connected.	___	___	X	X	X	___

Controls	A	M	E	T	C	O
a. Control valves operable.	___	___	X	X	___	___
b. Unit control system operable and verified.	___	___	___	X	___	___
c. Verify proper location and installation of thermostat.	___	___	X	___	___	___

Testing, Adjusting, and Balancing (TAB)	A	M	E	T	C	O
a. TAB Report submitted.	___	___	X	___	X	___

Pre-Functional Performance Test Checklist - HVAC System Controls

For HVAC System: _____

Checklist Item

Installation	A	M	E	T	C	O
a. Layout of control panel matches drawings.	___	___	X	X	___	___
b. Framed instructions mounted in or near control panel.	___	___	X	X	___	___
c. Components properly labeled (on inside and outside of panel).	___	___	X	X	___	___
d. Control components piped and/or wired to each labeled terminal strip.	___	___	X	X	___	___
e. EMCS connection made to each labeled terminal strip as shown.	___	___	X	X	___	___
f. Control wiring and tubing labeled at all terminations, splices, and junctions.	___	___	X	X	___	___

Main Power and Control Air						
a. 120 volt AC power available to panel.	___	___	___	X	___	___
b. 20 psig compressed air available to panel.	___	___	X	X	___	___

Testing, Adjusting, and Balancing (TAB)	A	M	E	T	C	O
a. TAB Report submitted.	___	___	X	___	X	___

Pre-Functional Performance Test Checklist - Single Zone Air Handling Unit

For Air Handling Unit: _____

Checklist Item

Installation	A	M	E	T	C	O
a. Inspection and access doors are operable and sealed.	___	___	X	___	X	___
b. Condensate drainage is unobstructed.	___	___	X	X	X	___
c. Fan belt adjusted.	___	___	X	___	X	___

Electrical	A	M	E	T	C	O
a. Power available to unit disconnect.	___	___	___	X	X	___
b. Power available to unit control panel.	___	___	___	X	___	___
c. Proper motor rotation verified.	___	___	___	___	X	___
d. Verify that power disconnect is located within sight of the unit it controls.	___	___	___	X	___	___
e. Power available to electric heating coil.	___	___	___	X	___	___

Coils	A	M	E	T	C	O
a. Chilled water piping properly connected.	___	___	X	___	___	___
a. Refrigerant piping properly connected.	___	___	X	X	X	___
c. Hot water piping properly connected.	___	___	X	___	___	___
c. Steam and condensate piping properly connected.	___	___	X	X	X	___

Controls	A	M	E	T	C	O
a. Control valves/actuators properly installed.	___	___	X	___	___	___
b. Control valves/actuators operable.	___	___	X	___	___	___
c. Dampers/actuators properly installed.	___	___	X	___	___	___
d. Dampers/actuators operable.	___	___	X	___	___	___
e. Verify proper location and installation of thermostat.	___	___	X	___	___	___

Testing, Adjusting, and Balancing (TAB)	A	M	E	T	C	O

a. TAB Report approved. ___ ___ X ___ X ___

Pre-Functional Performance Test Checklist - Energy Recovery System

For Energy Recovery System: _____

Checklist Item

Installation	A	M	E	T	C	O
a. Recovery system piping installed.	___	___	X	___	X	___

Startup	A	M	E	T	C	O
a. Startup and checkout complete.	___	___	X	X	X	___

Controls	A	M	E	T	C	O
a. Control valves/actuators properly installed.	___	___	X	___	___	___
b. Control valves/actuators operable.	___	___	X	___	___	___

- End of Appendix A -

-End of document
-- End of Section --