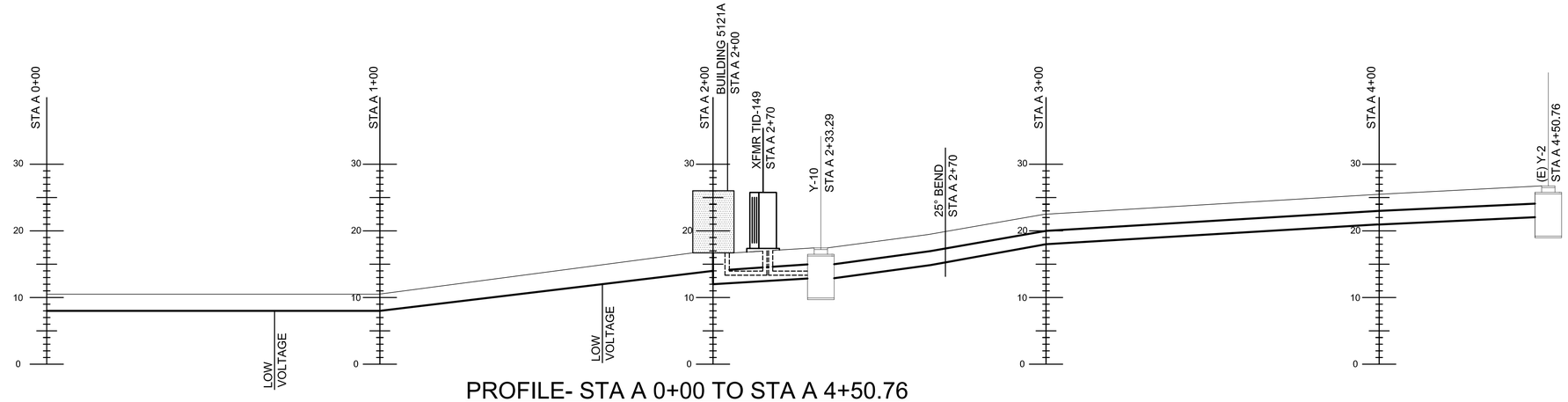

PROFILE- STA A 0+00 TO STA A 4+50.76

HORIZ. SCALE: 1"=20'
VERT. SCALE: 1"=10'

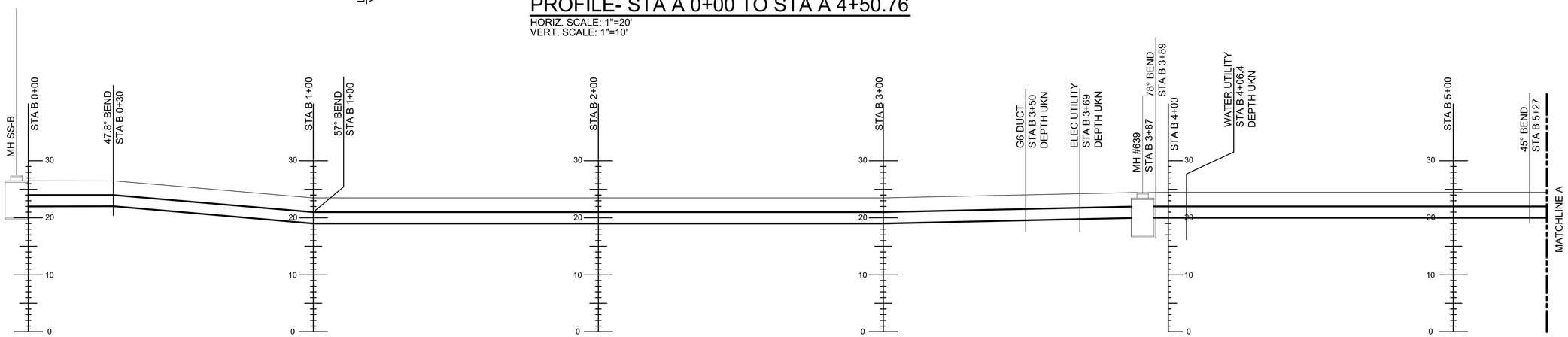

PROFILE- STA B 0+00 TO STA B 5+32.5 MATCHLINE A

HORIZ. SCALE: 1"=20'
VERT. SCALE: 1"=10'

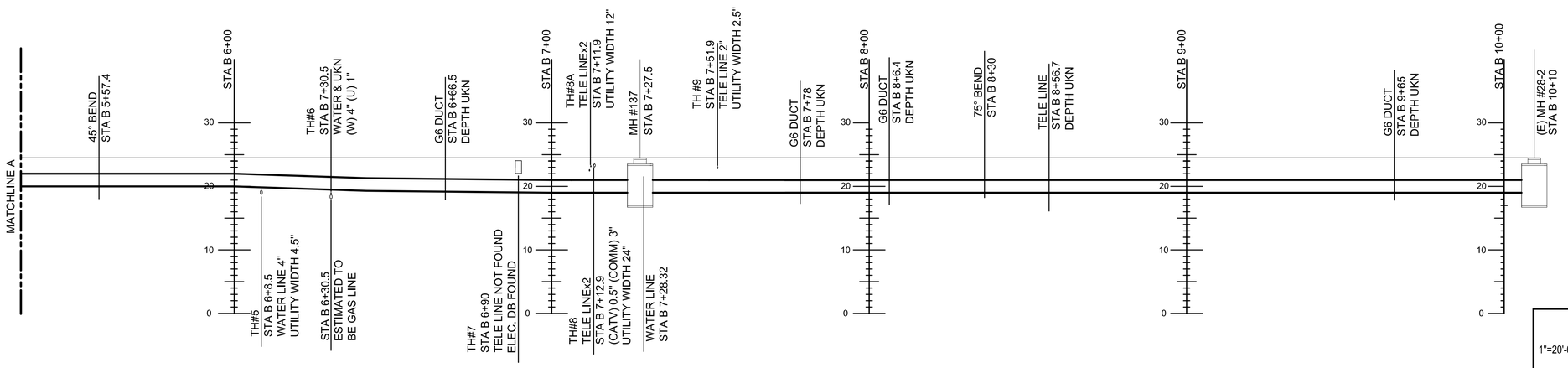

PROFILE- STA B 5+32.5 MATCHLINE A TO STA B 10+10

HORIZ. SCALE: 1"=20'
VERT. SCALE: 1"=10'

GRAPHIC SCALES

1"=20'-0" 20' 10' 0 20' 40'

1"=10'-0" 10' 5' 0 10' 20'

CAUTION: IF THIS DRAWING IS A REDUCTION, GRAPHIC SCALES MUST BE USED.

SYM	DESCRIPTION	DATE	APPR.

NAVFAC

COMMONWEALTH OF VIRGINIA
SAMUEL J. STATZ
Lic. No. 045162
14 JANUARY 2016
PROFESSIONAL ENGINEER

SUMMER CONSULTANTS INCORPORATED
7900 Westpark Drive | Suite A405 | McLean, VA 22102
(703) 556-8820 | www.summerconsultants.com

APPROVED
FOR COMMANDER NAVFAC
ACTIVITY
SATISFACTORY TO DATE
DES KU DRW EP CH SS/CPC
<<PM/DM>>
BRANCH MANAGER
CHIEF ENG/ARCH
<<XXX>>

DEPARTMENT OF THE NAVY
NAVAL FACILITIES ENGINEERING COMMAND
RESIDENT OFFICER IN CHARGE OF CONSTRUCTION
NAVAL FACILITIES ENGINEERING COMMAND - WASHINGTON
MARINE CORPS BASE QUANTICO
QUANTICO, VA
MARINE CORPS BASE, QUANTICO, VIRGINIA

P714 REPAIR OCS ELECTRIC SYSTEM
SUBSTATION, CONDUITS, AND CABLES

PROFILES

SCALE: AS NOTED
EPROJECT NO.: QU1536M
CONSTR. CONTR. NO.
NAVFAC DRAWING NO. 3189990
SHEET 81 OF 105

E-201

DRAWFORM REVISION: 10 MARCH 2009

FILE NAME: E-201 PROFILES.DWG
OUR REF: XXX.XX
PROJECT: XXXXXXXX
PLOT DATE: 1/13/2016 11:36:46 PM

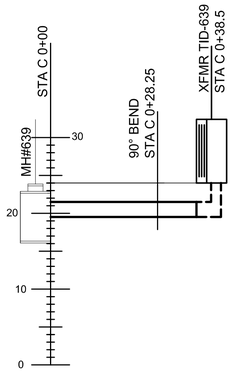

PROFILE- STA C 0+00 TO STA C 0+38.5

HORIZ. SCALE: 1"=20'
VERT. SCALE: 1"=10'

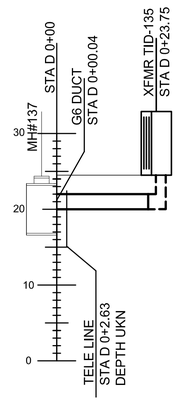

PROFILE- STA D 0+00 TO STA D 0+23.75

HORIZ. SCALE: 1"=20'
VERT. SCALE: 1"=10'

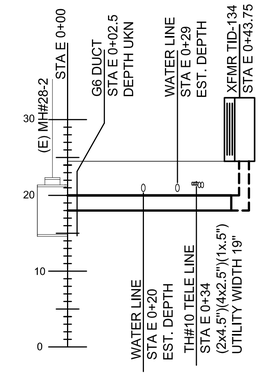

PROFILE- STA E 0+00 TO STA 0+43

HORIZ. SCALE: 1"=20'
VERT. SCALE: 1"=10'

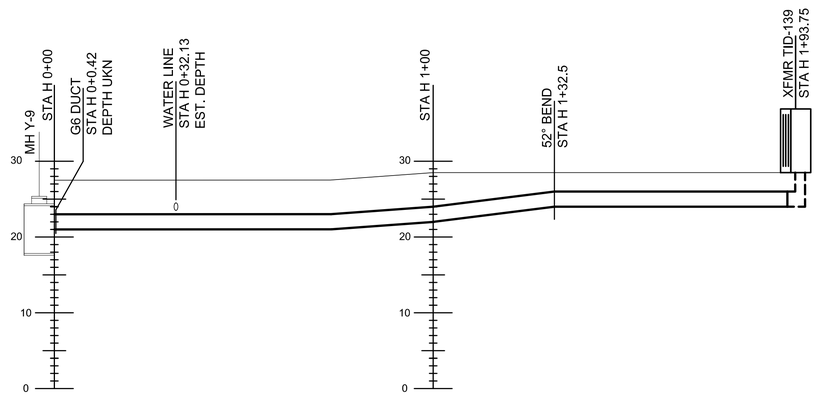

PROFILE- STA H 0+00 TO STA H 1+93.75

HORIZ. SCALE: 1"=20'
VERT. SCALE: 1"=10'

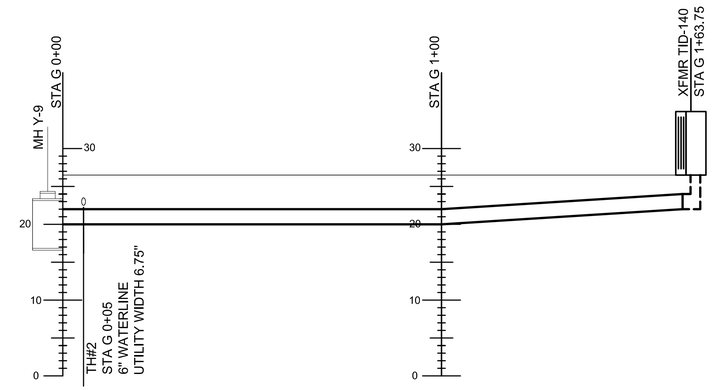

PROFILE- STA G 0+00 TO STA G 1+63.75

HORIZ. SCALE: 1"=20'
VERT. SCALE: 1"=10'

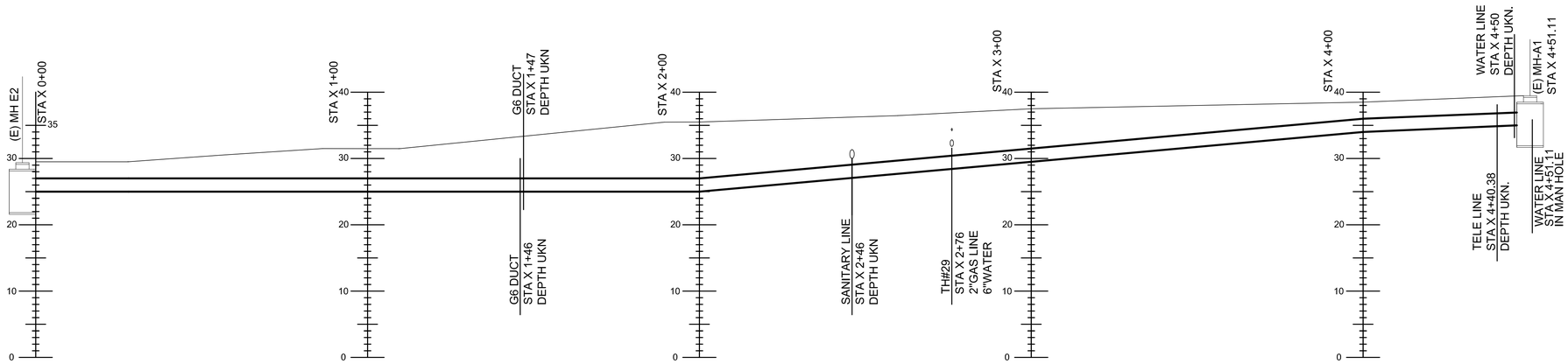

PROFILE- STA X 0+00 TO STA X 4+51.11

HORIZ. SCALE: 1"=20'
VERT. SCALE: 1"=10'

GRAPHIC SCALES

1"=20'-0" 20' 10' 0 20' 40'

1"=10'-0" 10' 5' 0 10' 20'

CAUTION: IF THIS DRAWING IS A REDUCTION, GRAPHIC SCALES MUST BE USED.

SYM	DESCRIPTION	DATE	APPR.

NAVFAC

COMMONWEALTH OF VIRGINIA
SAMUEL J. STATZ
Lic. No. 045162
14 JANUARY 2016
PROFESSIONAL ENGINEER

SUMMER CONSULTANTS INCORPORATED
7900 Westpark Drive | Suite A405 | McLean, VA 22102
(703) 556-8820 | www.summerconsultants.com

APPROVED
FOR COMMANDER NAVFAC
ACTIVITY
SATISFACTORY TO DATE
DES KU DRW EP CHK SS/CPC
<<PM/DM>>
BRANCH MANAGER
CHIEF ENG/ARCH
<<XX>>

DEPARTMENT OF THE NAVY
NAVAL FACILITIES ENGINEERING COMMAND
RESIDENT OFFICER IN CHARGE OF CONSTRUCTION
NAVAL FACILITIES ENGINEERING COMMAND - WASHINGTON
MARINE CORPS BASE QUANTICO
MARINE CORPS BASE, QUANTICO, VIRGINIA
QUANTICO, VA

P714 REPAIR OCS ELECTRIC SYSTEM
SUBSTATION, CONDUITS, AND CABLES

PROFILES

SCALE: AS NOTED
EPROJECT NO.: QU1536M
CONSTR. CONTR. NO.
NAVFAC DRAWING NO. 3189991
SHEET 82 OF 105

E-202

DRAWFORM REVISION: 10 MARCH 2009

FILE NAME: E-201 PROFILES.DWG
OUR REF: XXX.XX
PROJECT: XXXXXXXX
PLOT DATE: 1/13/2016 11:36:47 PM

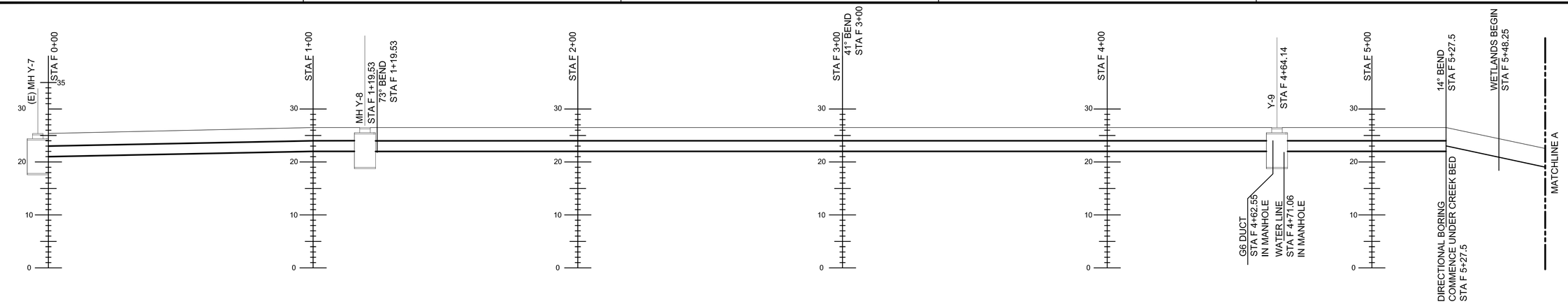

PROFILE- STA F 0+00 TO STA F 5+65 MATCHLINE A

HORIZ. SCALE: 1"=20'
VERT. SCALE: 1"=10'

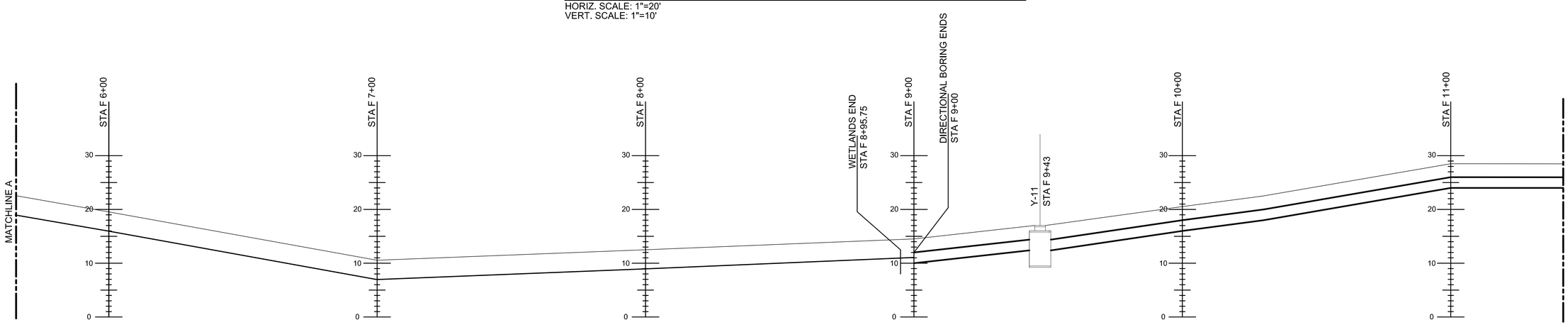

PROFILE- MATCHLINE A STA F 5+65 TO STA F 11+42.5 MATCHLINE B

HORIZ. SCALE: 1"=20'
VERT. SCALE: 1"=10'

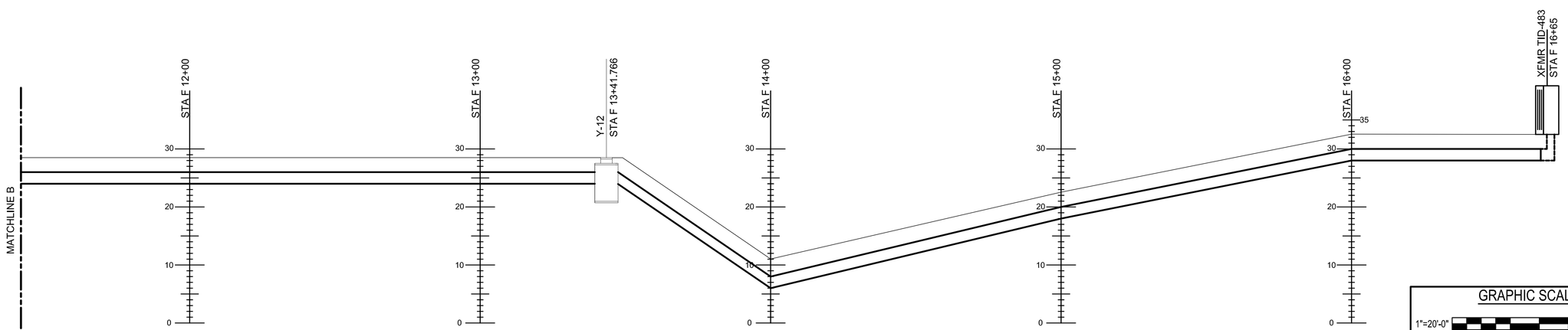

PROFILE- MATCHLINE B STA F 11+42.5 TO STA F 16+65

HORIZ. SCALE: 1"=20'
VERT. SCALE: 1"=10'

GRAPHIC SCALES

1"=20'-0" 20' 10' 0 20' 40'

1"=10'-0" 10' 5' 0 10' 20'

CAUTION: IF THIS DRAWING IS A REDUCTION, GRAPHIC SCALES MUST BE USED.

SYM	DESCRIPTION	DATE	APPR

NAVFAC

COMMONWEALTH OF VIRGINIA
SAMUEL J. STATZ
Lic. No. 045162
14 JANUARY 2016
PROFESSIONAL ENGINEER

SUMMER CONSULTANTS INCORPORATED
7900 Westpark Drive | Suite A405 | McLean, VA 22102
(703) 556-8820 | www.summerconsultants.com

APPROVED
FOR COMMANDER NAVFAC
ACTIVITY
SATISFACTORY TO DATE
DES KU DRW EP CHK SS/CPC
<<PM/DM>>
BRANCH MANAGER
CHIEF ENG/ARCH
<<XXX>>

DEPARTMENT OF THE NAVY
NAVAL FACILITIES ENGINEERING COMMAND
RESIDENT OFFICER IN CHARGE OF CONSTRUCTION
NAVAL FACILITIES ENGINEERING COMMAND - WASHINGTON
MARINE CORPS BASE QUANTICO
QUANTICO, VA
MARINE CORPS BASE, QUANTICO, VIRGINIA

P714 REPAIR OCS ELECTRIC SYSTEM SUBSTATION, CONDUITS, AND CABLES

PROFILES

SCALE: AS NOTED
EPROJECT NO.: QU1536M
CONSTR. CONTR. NO.
NAVFAC DRAWING NO.
3189992
SHEET 83 OF 105

E-203

DRAWFORM REVISION: 10 MARCH 2009

FILE NAME: E-201 PROFILES.DWG
OUR REF: XXX.XX
PROJECT: XXXXXXXX
PLOT DATE: 1/13/2016 11:36:49 PM

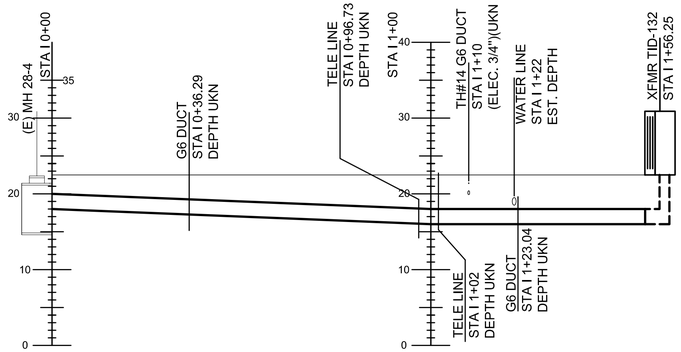

PROFILE- STA I 0+00 TO STA I 1+56.25

HORIZ. SCALE: 1"=20'
VERT. SCALE: 1"=10'

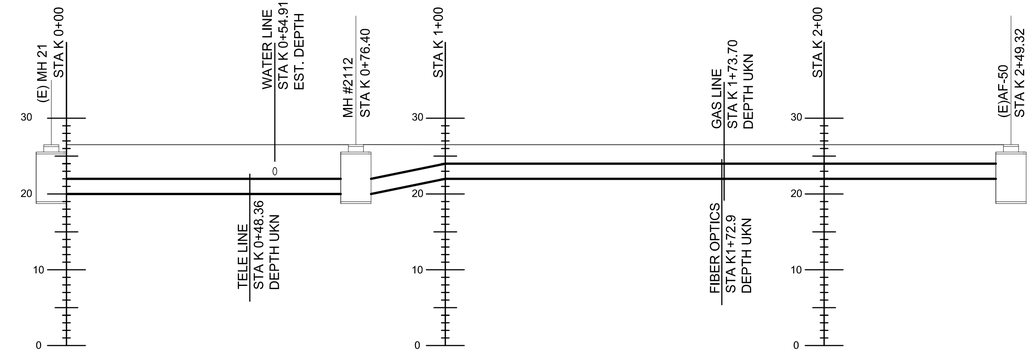

PROFILE- STA K 0+00 TO STA K 2+49.32

HORIZ. SCALE: 1"=20'
VERT. SCALE: 1"=10'

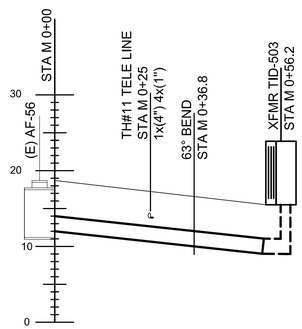

PROFILE- STA M 0+00 TO STA M 0+56.2

HORIZ. SCALE: 1"=20'
VERT. SCALE: 1"=10'

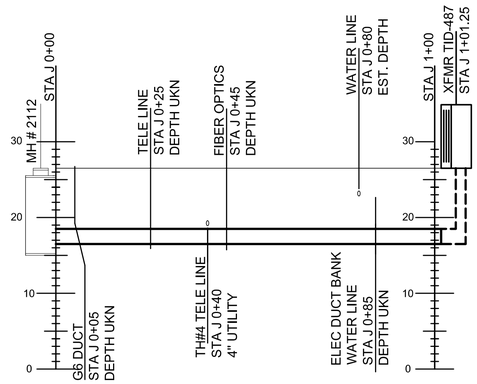

PROFILE- STA J 0+00 TO STA J 1+01.25

HORIZ. SCALE: 1"=20'
VERT. SCALE: 1"=10'

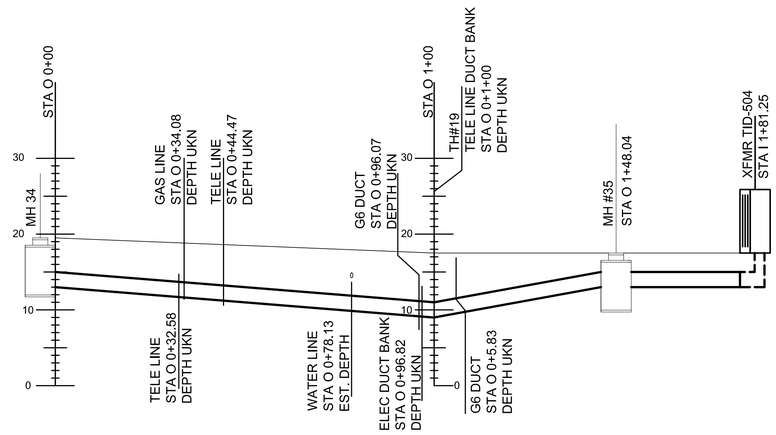

PROFILE- STA O 0+00 TO STA 0 1+81.25

HORIZ. SCALE: 1"=20'
VERT. SCALE: 1"=10'

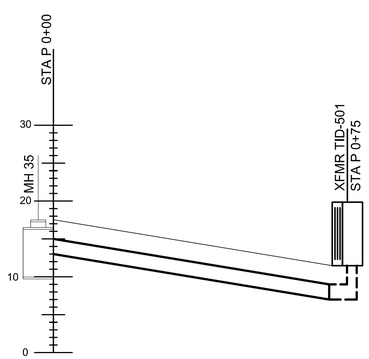

PROFILE- STA P 0+00 TO STA P 0+75

HORIZ. SCALE: 1"=20'
VERT. SCALE: 1"=10'

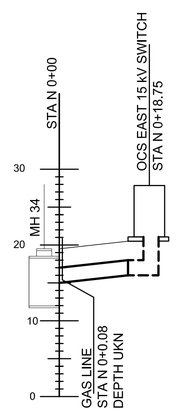

PROFILE- STA N 0+00 TO STA N 0+18.75

HORIZ. SCALE: 1"=20'
VERT. SCALE: 1"=10'

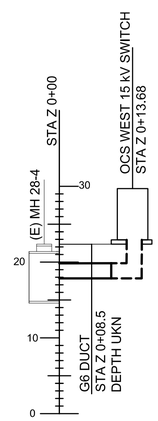

PROFILE- STA Z 0+00 TO STA Z 0+13.68

HORIZ. SCALE: 1"=20'
VERT. SCALE: 1"=10'

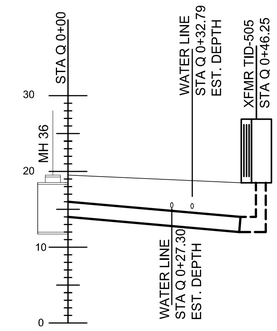

PROFILE- STA Q 0+00 TO STA Q 0+46.25

HORIZ. SCALE: 1"=20'
VERT. SCALE: 1"=10'

GRAPHIC SCALES

1"=20'-0" 20' 10' 0 20' 40'

1"=10'-0" 10' 5' 0 10' 20'

CAUTION: IF THIS DRAWING IS A REDUCTION, GRAPHIC SCALES MUST BE USED.

SYM	DESCRIPTION	DATE	APPR

NAVFAC

COMMONWEALTH OF VIRGINIA
SAMUEL J. STATZ
Lic. No. 045162
14 JANUARY 2016
PROFESSIONAL ENGINEER

SUMMER CONSULTANTS INCORPORATED
7900 Westpark Drive | Suite A405 | McLean, VA 22102
(703) 556-8820 | www.summerconsultants.com

APPROVED
FOR COMMANDER NAVFAC
ACTIVITY
SATISFACTORY TO DATE
DES KU DRW EP CHK SS/CPC
<<PM/DM>>
BRANCH MANAGER
CHIEF ENG/ARCH
<<XX>>

DEPARTMENT OF THE NAVY
NAVAL FACILITIES ENGINEERING COMMAND
RESIDENT OFFICER IN CHARGE OF CONSTRUCTION
NAVAL FACILITIES ENGINEERING COMMAND - WASHINGTON
MARINE CORPS BASE QUANTICO, VIRGINIA
QUANTICO, VA

P714 REPAIR OCS ELECTRIC SYSTEM SUBSTATION, CONDUITS, AND CABLES

PROFILES

SCALE: AS NOTED
EPROJECT NO.: QU1536M
CONSTR. CONTR. NO.
NAVFAC DRAWING NO. 3189993
SHEET 84 OF 105

E-204

DRAWFORM REVISION: 10 MARCH 2009

FILE NAME: E-201 PROFILES.DWG
OUR REF: XXX.XX
PROJECT: XXXXXXXX
PLOT DATE: 1/13/2016 11:36:50 PM

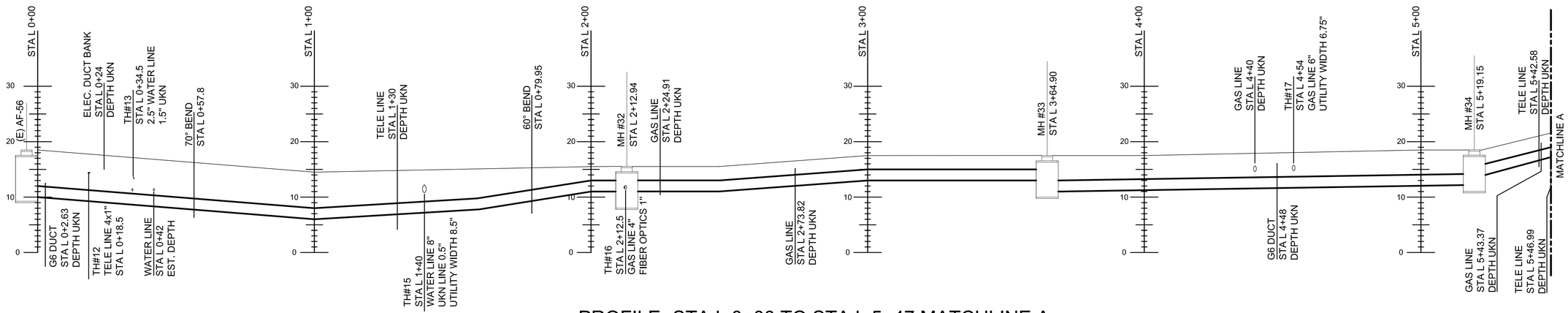

PROFILE- STA L 0+00 TO STA L 5+47 MATCHLINE A

HORIZ. SCALE: 1"=20'
VERT. SCALE: 1"=10'

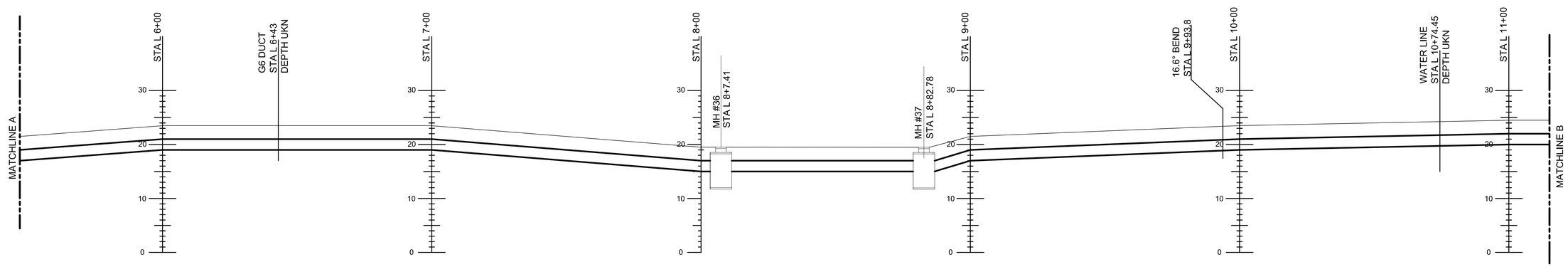

PROFILE- MATCHLINE A STA L 5+47 TO STA L 11+15 MATCHLINE B

HORIZ. SCALE: 1"=20'
VERT. SCALE: 1"=10'

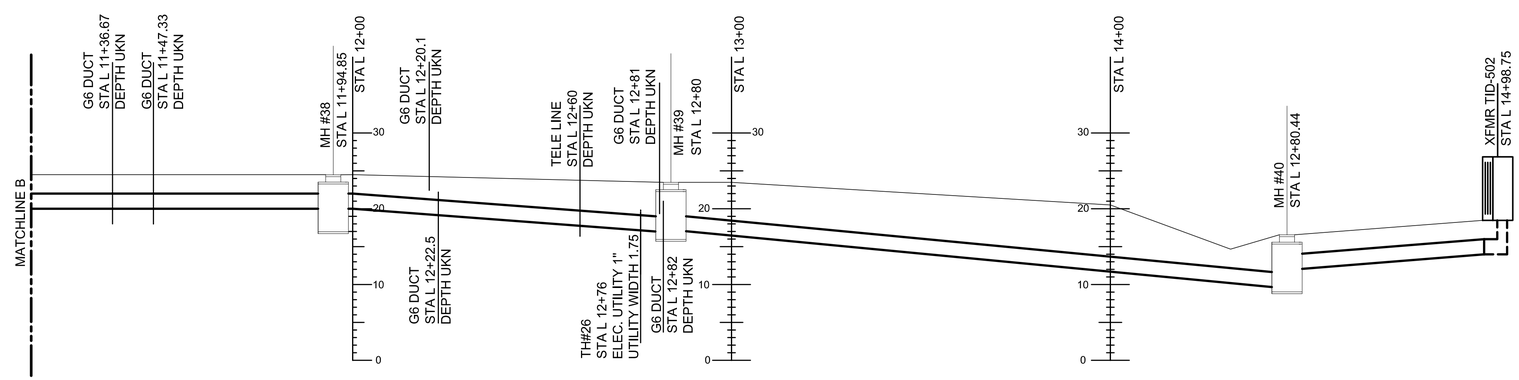

PROFILE- MATCHLINE B STA L 11+15 TO STA L 14+98.75

HORIZ. SCALE: 1"=20'
VERT. SCALE: 1"=10'

GRAPHIC SCALES

1"=20'-0" 20' 10' 0 20' 40'

1"=10'-0" 10' 5' 0 10' 20'

CAUTION: IF THIS DRAWING IS A REDUCTION, GRAPHIC SCALES MUST BE USED.

SYM	DESCRIPTION	DATE	APPR

NAVFAC

COMMONWEALTH OF VIRGINIA
SAMUEL J. STATZ
Lic. No. 045162
14 JANUARY 2016
PROFESSIONAL ENGINEER

SUMMER CONSULTANTS INCORPORATED
7900 Westpark Drive | Suite A405 | McLean, VA 22102
(703) 556-8820 | www.summerconsultants.com

APPROVED
FOR COMMANDER NAVFAC
ACTIVITY
SATISFACTORY TO DATE
DES KU DRW EP O=SS/CPC
<<PM/DM>>
BRANCH MANAGER
CHIEF ENG/ARCH
<<XX>>

DEPARTMENT OF THE NAVY
NAVAL FACILITIES ENGINEERING COMMAND - WASHINGTON
RESIDENT OFFICER IN CHARGE OF CONSTRUCTION
MARINE CORPS BASE QUANTICO
NAVAL FACILITIES ENGINEERING COMMAND
MARINE CORPS BASE, QUANTICO, VIRGINIA
QUANTICO, VA

P714 REPAIR OCS ELECTRIC SYSTEM SUBSTATION, CONDUITS, AND CABLES

PROFILES

SCALE: AS NOTED
EPROJECT NO.: QU1536M
CONSTR. CONTR. NO.
NAVFAC DRAWING NO. 3189994
SHEET 85 OF 105

E-205

DRAWFORM REVISION: 10 MARCH 2009

FILE NAME: E-201 PROFILES.DWG
OUR REF: XXX.XX
PROJECT: XXXXXXX
PLOT DATE: 1/13/2016 11:36:52 PM

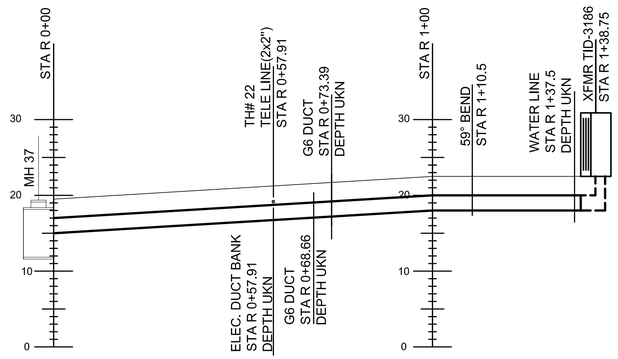

PROFILE- STA R 0+00 TO STA R 1+38.75

HORIZ. SCALE: 1"=20'
VERT. SCALE: 1"=10'

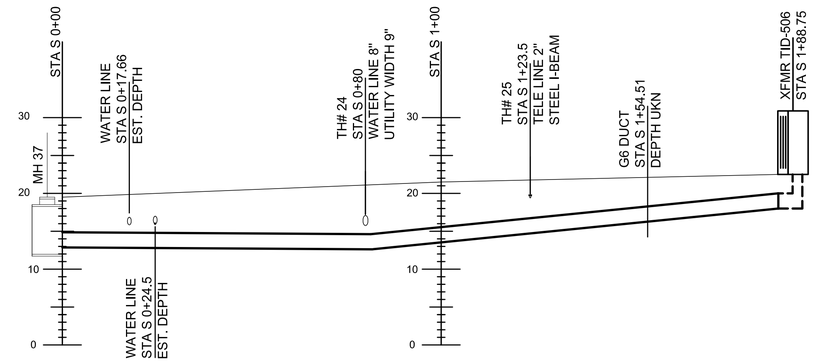

PROFILE- STA S 0+00 TO STA S 1+88.75

HORIZ. SCALE: 1"=20'
VERT. SCALE: 1"=10'

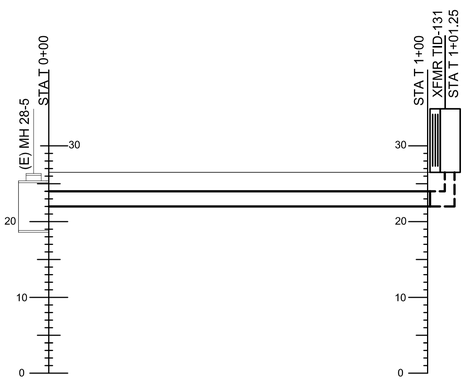

PROFILE- STA T 0+00 TO STA T 1+01.25

HORIZ. SCALE: 1"=20'
VERT. SCALE: 1"=10'

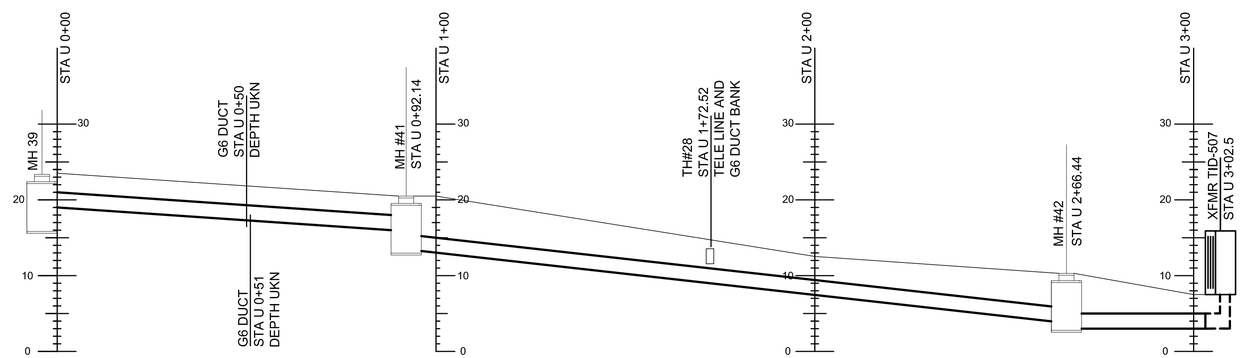

PROFILE- STA U 0+00 TO STA U 3+02.5

HORIZ. SCALE: 1"=20'
VERT. SCALE: 1"=10'

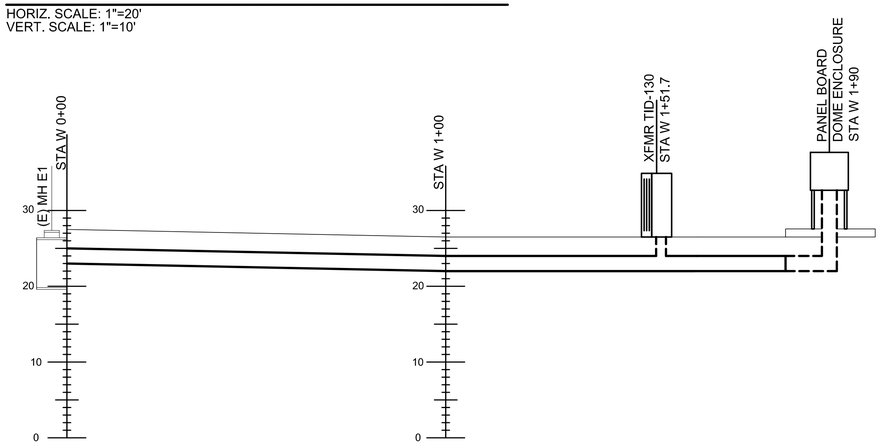

PROFILE- STA W 0+00 TO STA W 1+90

HORIZ. SCALE: 1"=20'
VERT. SCALE: 1"=10'

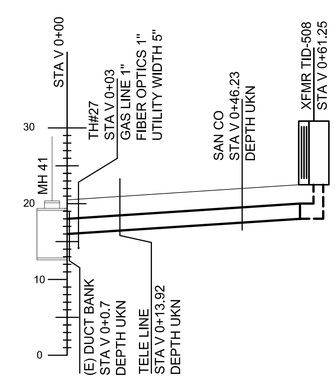

PROFILE- STA V 0+00 TO STA V 0+61.25

HORIZ. SCALE: 1"=20'
VERT. SCALE: 1"=10'

GRAPHIC SCALES

1"=20'-0" 20' 10' 0 20' 40'

1"=10'-0" 10' 5' 0 10' 20'

CAUTION: IF THIS DRAWING IS A REDUCTION, GRAPHIC SCALES MUST BE USED.

SYM	DESCRIPTION	DATE	APPR

NAVFAC

COMMONWEALTH OF VIRGINIA
SAMUEL J. STATZ
Lic. No. 045162
14 JANUARY 2016
PROFESSIONAL ENGINEER

SUMMER CONSULTANTS INCORPORATED
7900 Westpark Drive | Suite A405 | McLean, VA 22102
(703) 556-8820 | www.summerconsultants.com

APPROVED

FOR COMMANDER NAVFAC

ACTIVITY

SATISFACTORY TO DATE

DES KU DRW EP CHK SS/CPC

<<PM/DM>>

BRANCH MANAGER

CHIEF ENG/ARCH

<<XXX>>

DEPARTMENT OF THE NAVY
NAVAL FACILITIES ENGINEERING COMMAND - WASHINGTON
RESIDENT OFFICER IN CHARGE OF CONSTRUCTION
MARINE CORPS BASE, QUANTICO, VIRGINIA

NAVAL FACILITIES ENGINEERING COMMAND
MARINE CORPS BASE QUANTICO
QUANTICO, VA

P714 REPAIR OCS ELECTRIC SYSTEM SUBSTATION, CONDUITS, AND CABLES

PROFILES

SCALE: AS NOTED
EPROJECT NO.: QU1536M
CONSTR. CONTR. NO.
NAVFAC DRAWING NO. 3189995
SHEET 86 OF 105

E-206

DRAWFORM REVISION: 10 MARCH 2009

FILE NAME: E-201 PROFILES.DWG
OUR REF: XXX.XX
PROJECT: XXXXXXXX
PLOT DATE: 1/13/2016 11:36:54 PM

GENERAL NOTES

1. ALL WORK SHALL BE NEW AND PROVIDED UNDER THIS CONTRACT UNLESS SPECIFICALLY MARKED "EXISTING", "EXIST.", OR "(E)".
2. VERIFY LOCATION AND DIMENSIONS OF EXISTING EQUIPMENT AND COORDINATE ALL WORK PRIOR TO THE START OF CONSTRUCTION.

NOTES

3. UPON COMPLETION OF 15KV SYSTEM, REMOVE FEEDER.

FEEDER SCHEDULE

NUMBER	WIRE QUANTITY	WIRE SIZE	WIRE GROUND
1	3-1/C #1 CU, 133% EPR, 15 KV		#4/0
2	3-1/C #4/0 CU, 133% EPR, 15 KV		#4/0

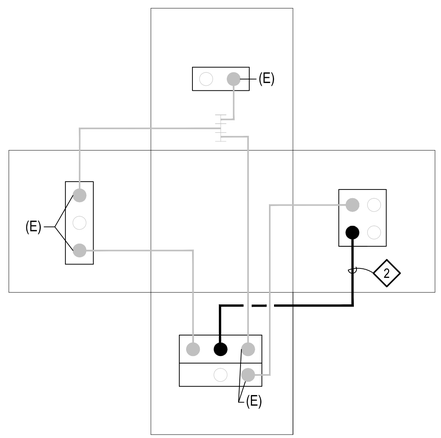

5 ES-108 | E-301
DETAIL BUTTERFLY- MANHOLE Y-6
NO SCALE

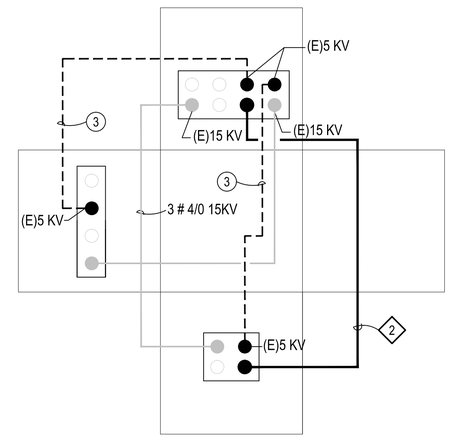

3 ES-104 | E-301
DETAIL BUTTERFLY- MANHOLE Y3
NO SCALE

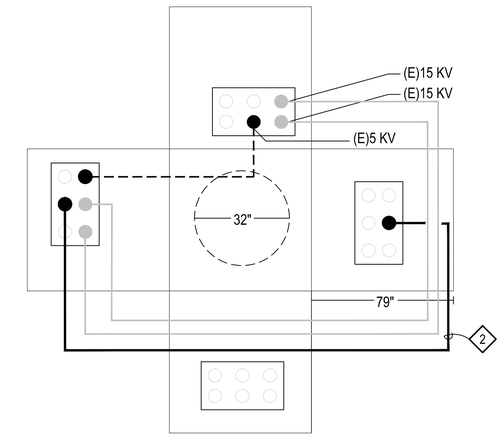

1 ES-104 | E-301
DETAIL BUTTERFLY- MANHOLE Y1
NO SCALE

NOTES:
24"H COLLAR

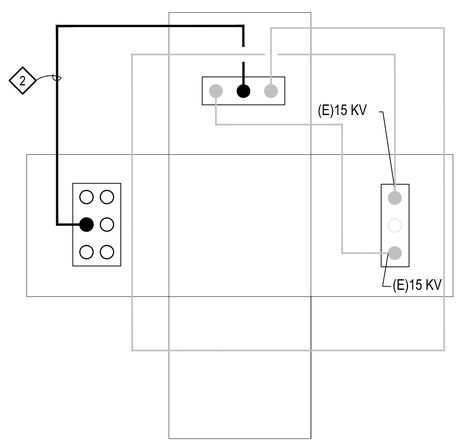

6 ES-108 | E-301
DETAIL BUTTERFLY- MANHOLE Y7
NO SCALE

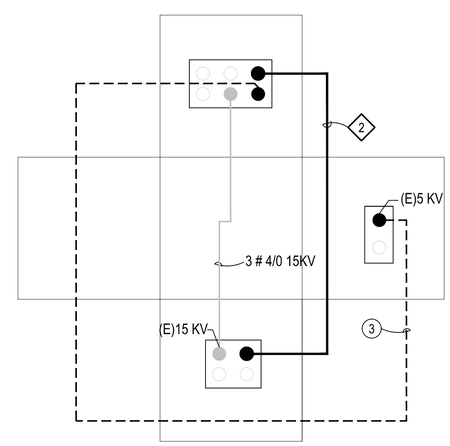

4 ES-108 | E-301
DETAIL BUTTERFLY- MANHOLE Y5
NO SCALE

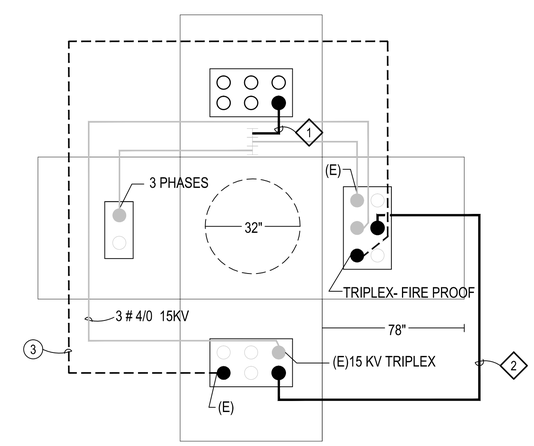

2 ES-104 | E-301
DETAIL DETAIL- MANHOLE Y2
NO SCALE

NEW 15KV FEEDER
EXISTING FEEDER TO BE DEMO
EXISTING FEEDER

SYM	DESCRIPTION	DATE	APR

NAVFAC

COMMONWEALTH OF VIRGINIA
SAMUEL J. STATZ
Lic. No. 045162
14 JANUARY 2016
PROFESSIONAL ENGINEER

SUMMER CONSULTANTS INCORPORATED
7900 Westpark Drive | Suite A405 | McLean, VA 22102
(703) 556-8820 | www.summerconsultants.com

APPROVED
FOR COMMANDER NAVFAC
ACTIVITY
SATISFACTORY TO DATE
DES KU DRW EP CHK SS/CPC
<<PM/DM>>
BRANCH MANAGER
CHIEF ENG/ARCH
<<XX>>

DEPARTMENT OF THE NAVY
NAVAL FACILITIES ENGINEERING COMMAND
RESIDENT OFFICER IN CHARGE OF CONSTRUCTION
NAVAL FACILITIES ENGINEERING COMMAND - WASHINGTON
MARINE CORPS BASE, QUANTICO, VIRGINIA
MARINE CORPS BASE QUANTICO
QUANTICO, VA
P714 REPAIR OCS ELECTRIC SYSTEM SUBSTATION, CONDUITS, AND CABLES
MANHOLE DETAILS

SCALE: AS NOTED
EPROJECT NO.: QU1536M
CONSTR. CONTR. NO.
NAVFAC DRAWING NO. 3189996
SHEET 87 OF 105
E-301

DRAWFORM REVISION: 10 MARCH 2009

FILE NAME: E-301.DWG
OUR REF: XXX.XX
PROJECT: XXXXXXXX
PLOT DATE: 1/13/2016 11:36:58 PM

GENERAL NOTES

1. ALL WORK SHALL BE NEW AND PROVIDED UNDER THIS CONTRACT UNLESS SPECIFICALLY MARKED "EXISTING", "EXIST.", OR "(E)".
2. VERIFY LOCATION AND DIMENSIONS OF EXISTING EQUIPMENT AND COORDINATE ALL WORK PRIOR TO THE START OF CONSTRUCTION.

NOTES

3. UPON COMPLETION OF 15KV SYSTEM REMOVE FEEDER.

FEEDER SCHEDULE

NUMBER	WIRE QUANTITY	WIRE SIZE	WIRE GROUND
1	3-1/C #1 CU, 133% EPR, 15 KV		#4/0
2	3-1/C #4/0 CU, 133% EPR, 15 KV		#4/0

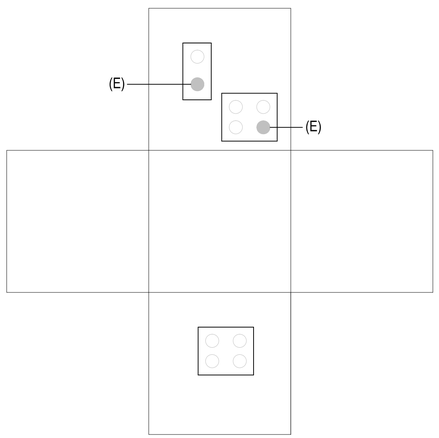

5 / ES-105 | E-302 DETAIL
BUTTERFLY- MANHOLE 20
NO SCALE

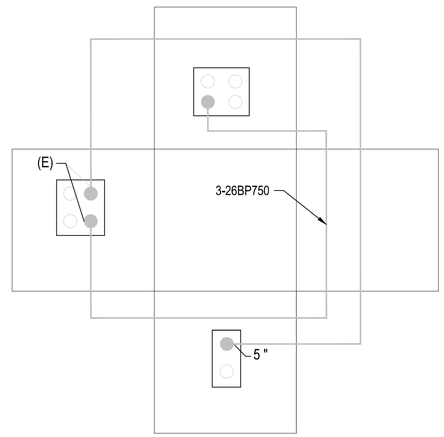

3 / ES-105 | E-302 DETAIL
BUTTERFLY- MANHOLE OCS-26
NO SCALE

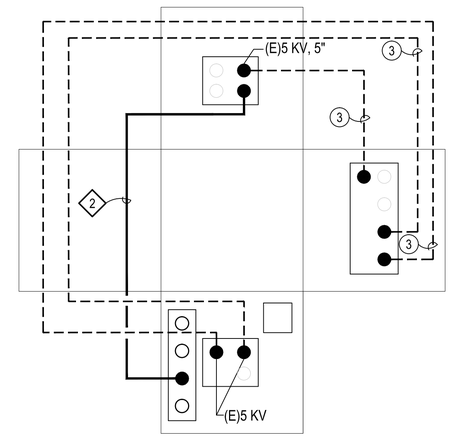

1 / ES-105 | E-302 DETAIL
BUTTERFLY- MANHOLE 21
NO SCALE

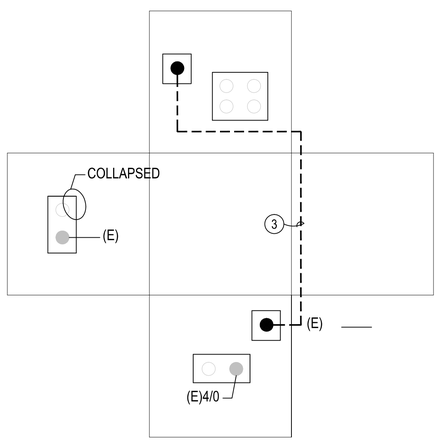

6 / ES-105 | E-302 DETAIL
BUTTERFLY- MANHOLE 22
NO SCALE

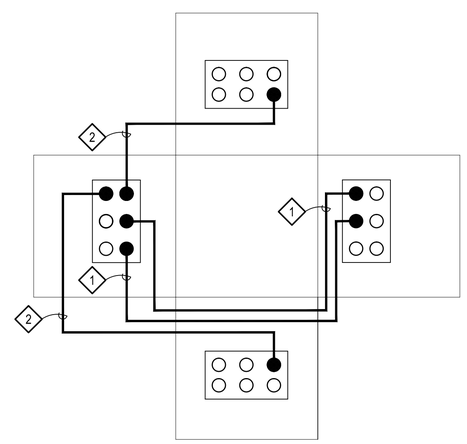

4 / ES-111 | E-302 DETAIL
BUTTERFLY- MH #34
NO SCALE

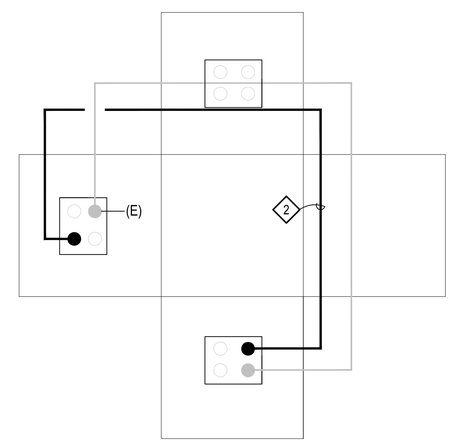

2 / ES-105 | E-302 DETAIL
BUTTERFLY- MANHOLE 28A
NO SCALE

NEW 15KV FEEDER
EXISTING FEEDER TO BE DEMO
EXISTING FEEDER

SYM	DESCRIPTION	DATE	APPR

NAVFAC

COMMONWEALTH OF VIRGINIA
SAMUEL J. STATZ
Lic. No. 045162
14 JANUARY 2016
PROFESSIONAL ENGINEER

SUMMER CONSULTANTS INCORPORATED
7900 Westpark Drive | Suite A405 | McLean, VA 22102
(703) 556-8820 | www.summerconsultants.com

APPROVED
FOR COMMANDER NAVFAC
ACTIVITY
SATISFACTORY TO DATE
DES KU DRW EP CHK SS/CPC
<<PM/DM>>
BRANCH MANAGER
CHIEF ENG/ARCH
<<XX>>

DEPARTMENT OF THE NAVY
NAVAL FACILITIES ENGINEERING COMMAND
RESIDENT OFFICER IN CHARGE OF CONSTRUCTION
NAVAL FACILITIES ENGINEERING COMMAND - WASHINGTON
MARINE CORPS BASE QUANTICO
MARINE CORPS BASE, QUANTICO, VIRGINIA
QUANTICO, VA
P714 REPAIR OCS ELECTRIC SYSTEM SUBSTATION, CONDUITS, AND CABLES
MANHOLE DETAILS

SCALE: AS NOTED
EPROJECT NO.: QU1536M
CONSTR. CONTR. NO.
NAVFAC DRAWING NO. 3189997
SHEET 88 OF 105
E-302

DRAWFORM REVISION: 10 MARCH 2009

FILE NAME: E-301.DWG
OUR REF: XXX.XX
PROJECT: XXXXXXXX
PLOT DATE: 1/13/2016 11:36:59 PM

GENERAL NOTES

1. ALL WORK SHALL BE NEW AND PROVIDED UNDER THIS CONTRACT UNLESS SPECIFICALLY MARKED "EXISTING", "EXIST.", OR "(E)".
2. VERIFY LOCATION AND DIMENSIONS OF EXISTING EQUIPMENT AND COORDINATE ALL WORK PRIOR TO THE START OF CONSTRUCTION.

FEEDER SCHEDULE

NUMBER	WIRE		
	QUANTITY	SIZE	GROUND
2	3-1/C #4/0 CU, 133% EPR, 15 KV		#4/0

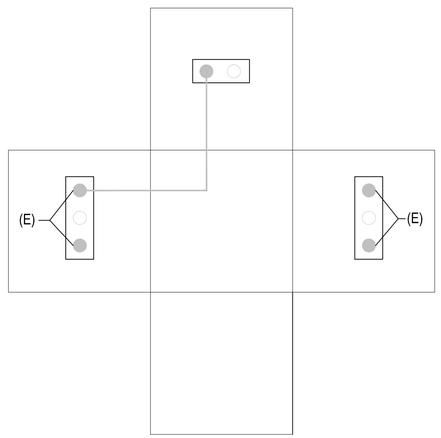

5 ES-108 E-303 DETAIL
BUTTERFLY- MH E-103
NO SCALE

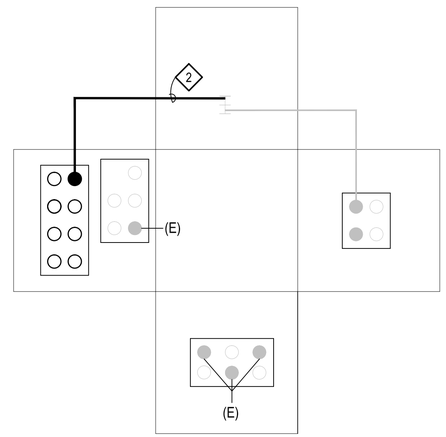

3 ES-401 E-303 DETAIL-
BUTTERFLY- MANHOLE OCS-27
NO SCALE

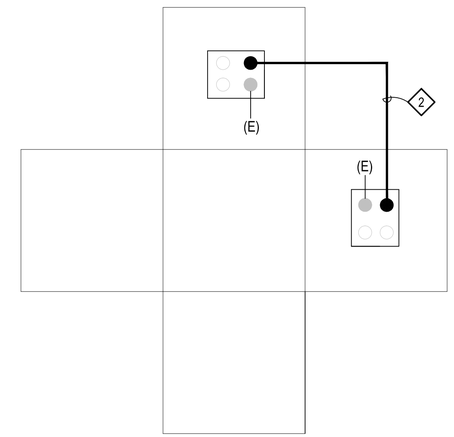

1 ES-109 E-303 DETAIL-
BUTTERFLY- MANHOLE AF-50
NO SCALE

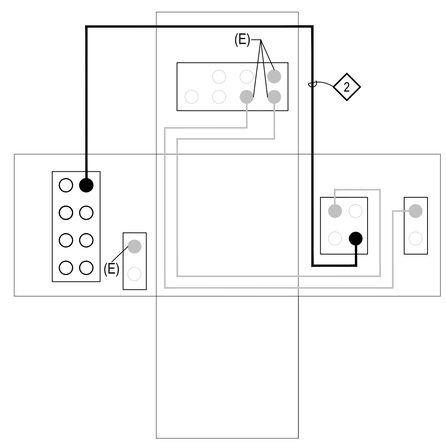

4 ES-401 E-303 DETAIL
BUTTERFLY- MANHOLE 28
NO SCALE

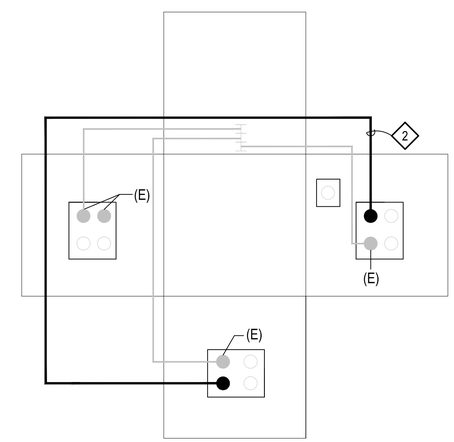

2 ES-111 E-303 DETAIL
BUTTERFLY- MH# 28-6
NO SCALE

NEW 15KV FEEDER
EXISTING FEEDER TO BE DEMO
EXISTING FEEDER

SYM	DESCRIPTION	DATE	APPR

NAVFAC

COMMONWEALTH OF VIRGINIA
SAMUEL J. STATZ
Lic. No. 045162
14 JANUARY 2016
PROFESSIONAL ENGINEER

SUMMER CONSULTANTS INCORPORATED
7900 Westpark Drive | Suite A405 | McLean, VA 22102
(703) 556-8820 | www.summerconsultants.com

APPROVED
FOR COMMANDER NAVFAC
ACTIVITY
SATISFACTORY TO DATE
DES KU DRW EP CHK SS/CPC
<<PM/DM>>
BRANCH MANAGER
CHIEF ENG/ARCH
<<XXX>>

DEPARTMENT OF THE NAVY
NAVAL FACILITIES ENGINEERING COMMAND
RESIDENT OFFICER IN CHARGE OF CONSTRUCTION
NAVAL FACILITIES ENGINEERING COMMAND - WASHINGTON
MARINE CORPS BASE, QUANTICO, VIRGINIA
MARINE CORPS BASE QUANTICO
QUANTICO, VA

P714 REPAIR OCS ELECTRIC SYSTEM
SUBSTATION, CONDUITS, AND CABLES

MANHOLE DETAILS

SCALE: AS NOTED
EPROJECT NO.: QU1536M
CONSTR. CONTR. NO.
NAVFAC DRAWING NO. 3189998
SHEET 89 OF 105

E-303

DRAWFORM REVISION: 10 MARCH 2009

FILE NAME: E-301.DWG
OUR REF: XXX.XX
PROJECT: XXXXXXXX
PLOT DATE: 11/3/2016 11:36:59 PM

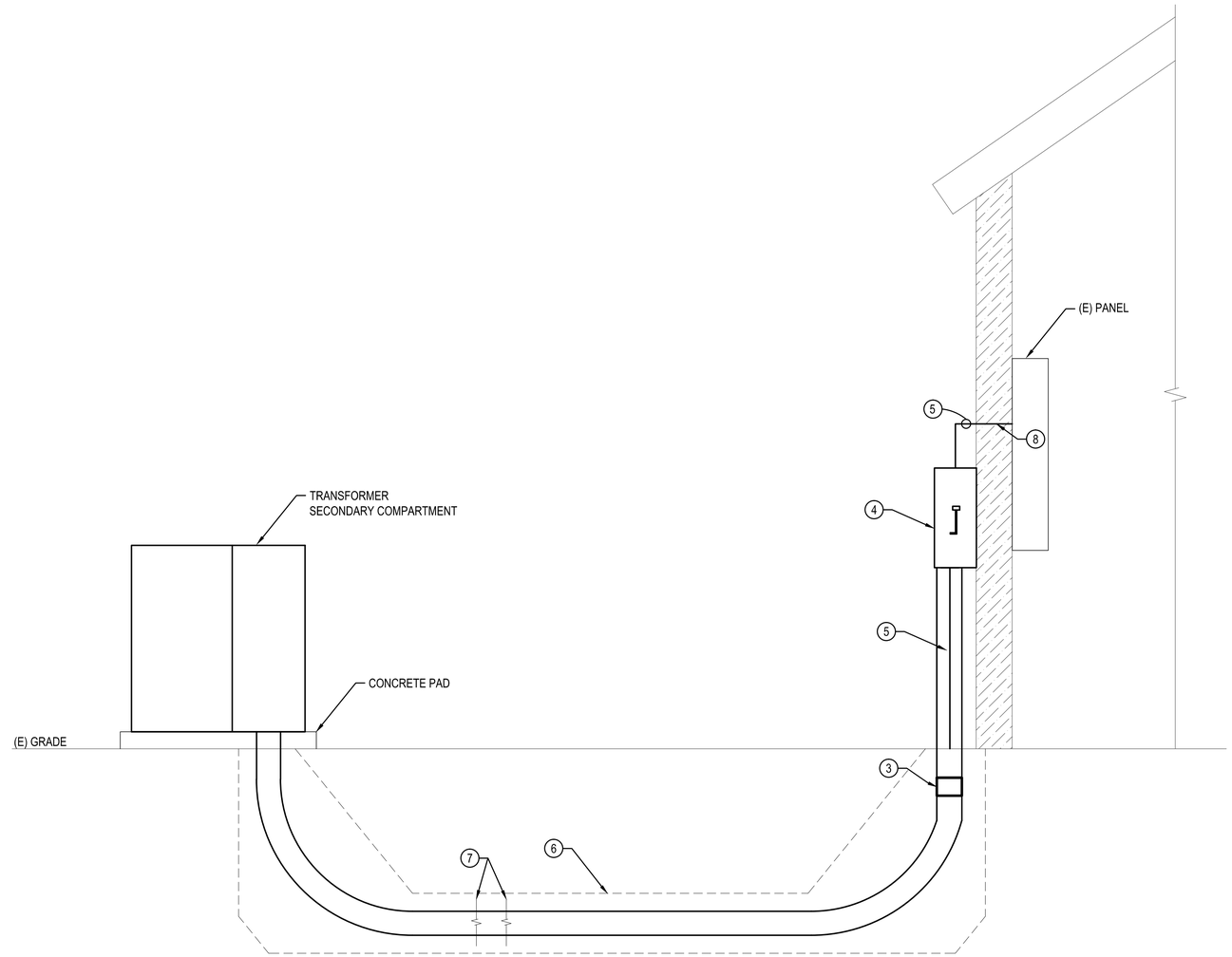

DETAIL SERVICE ENTRANCE

1 / XXX E-401

SCALE: 1" = 1'-0"

GENERAL NOTES

1. ALL WORK SHALL BE NEW AND PROVIDED UNDER THIS CONTRACT UNLESS SPECIFICALLY MARKED "EXISTING", "EXIST.", OR "(E)".
2. VERIFY LOCATION AND DIMENSIONS OF EXISTING EQUIPMENT AND COORDINATE ALL WORK PRIOR TO THE START OF CONSTRUCTION.

NOTES

3. TRANSITION FROM PVC TO RMC AT GRADE 12-18" BELOW GRADE.
4. PROVIDE SERVICE ENTRANCE RATED DISCONNECT SWITCH ON EXTERIOR OF BUILDING. MAXIMUM HEIGHT OF HANDLE SHALL BE 5'-0".
5. SEE FEEDER SCHEDULE FOR SIZE.
6. SEE FEEDER SCHEDULE FOR DUCTBANK DETAILS.
7. DISTANCE VARIES. SEE SITE PLAN FOR INDIVIDUAL BUILDINGS.
8. COREDRILL HOLE FOR CONDUIT AND SEAL PENETRATION WEATHERTIGHT.
9. FROM SAFETY SWITCH PROVIDE EXTERIOR MOUNTED CONDUIT ATTACHED TO WALL APPROXIMATELY 20' ABOVE GRADE. PROVIDE JUNCTION BOX AND INTERCEPT EXISTING FEEDERS FROM WEATHERHEAD.

FEEDER SCHEDULE

TRANSFORMER	BUILDING NUMBER	DISCONNECT SWITCH	FEEDER	ABOVE GRADE CONDUIT SIZE	EXTERIOR MATERIAL	DUCTBANK DETAIL	NOTES
TID 132	3	400A/3P/FSS @ 225A	4 #4/0 + 1 #4	2-1/2"	METAL	1/E-502	
TID 131	2179	200A/3P/FSS @ 150A	4 #1/0 + 1 #6	2"	METAL	1/E-502	
	2124	100A/3P/FSS @ 100A	4 #3 + 1 #8	1-1/4"	BRICK/BLOCK	1/E-502	
	2125	100A/3P/FSS @ 100A	4 #3 + 1 #8	1-1/4"	BRICK/BLOCK	1/E-502	
TID 139	2118	400A/3P/FSS @ 200A	4 #500 + 1 #1/0	3-1/2"	BRICK/BLOCK	1/E-502	
TID 140	3202	400A/3P/FSS @ 225A	4 #4/0 + 1 #2	2-1/2"	METAL	1/E-502	
	3209	400A/3P/FSS @ 225A	4 #4/0 + 1 #2	2-1/2"	METAL	1/E-502	
TID 507	3230	400A/3P/FSS @ 400A	4 #500+ 1 #1/0	3-1/2"	METAL	1/E-502	9
TID 501	69/2113	400A/3P/FSS @ 225A	4 #4/0 + 1 #2	2-1/2"	BRICK	1/E-502	
TID 504	2177	400A/3P/FSS @ 225A	4 #4/0 + 1 #2	2-1/2"	SHINGLE	1/E-502	

GRAPHIC SCALES

1"=1'-0" 12" 6" 0 12" 24"

CAUTION: IF THIS DRAWING IS A REDUCTION, GRAPHIC SCALES MUST BE USED.

SYM	DESCRIPTION	DATE	APPR.

NAVFAC

COMMONWEALTH OF VIRGINIA
SAMUEL J. STATZ
Lic. No. 045162
14 JANUARY 2016
PROFESSIONAL ENGINEER

SUMMER CONSULTANTS INCORPORATED
7900 Westpark Drive | Suite A405 | McLean, VA 22102
(703) 556-8820 | www.summerconsultants.com

APPROVED
FOR COMMANDER NAVFAC
ACTIVITY
SATISFACTORY TO DATE
DES KU DRW EP CHK SS/CPC
<<PM/DM>>
BRANCH MANAGER
CHIEF ENG/ARCH
<<XXX>>

DEPARTMENT OF THE NAVY
NAVAL FACILITIES ENGINEERING COMMAND
RESIDENT OFFICER IN CHARGE OF CONSTRUCTION
NAVAL FACILITIES ENGINEERING COMMAND - WASHINGTON
MARINE CORPS BASE QUANTICO
MARINE CORPS BASE, QUANTICO, VIRGINIA
QUANTICO, VA

P714 REPAIR OCS ELECTRIC SYSTEM SUBSTATION, CONDUITS, AND CABLES

DETAIL SERVICE ENTRANCE

SCALE: AS NOTED
EPROJECT NO.: QU1536M
CONSTR. CONTR. NO.
NAVFAC DRAWING NO. 3189999
SHEET 90 OF 105

E-401

DRAWFORM REVISION: 10 MARCH 2009

FILE NAME: E-401 DETAIL.DWG
OUR REF: XXX.XX
PROJECT: XXXXXXXX
PLOT DATE: 1/13/2016 11:37:02 PM

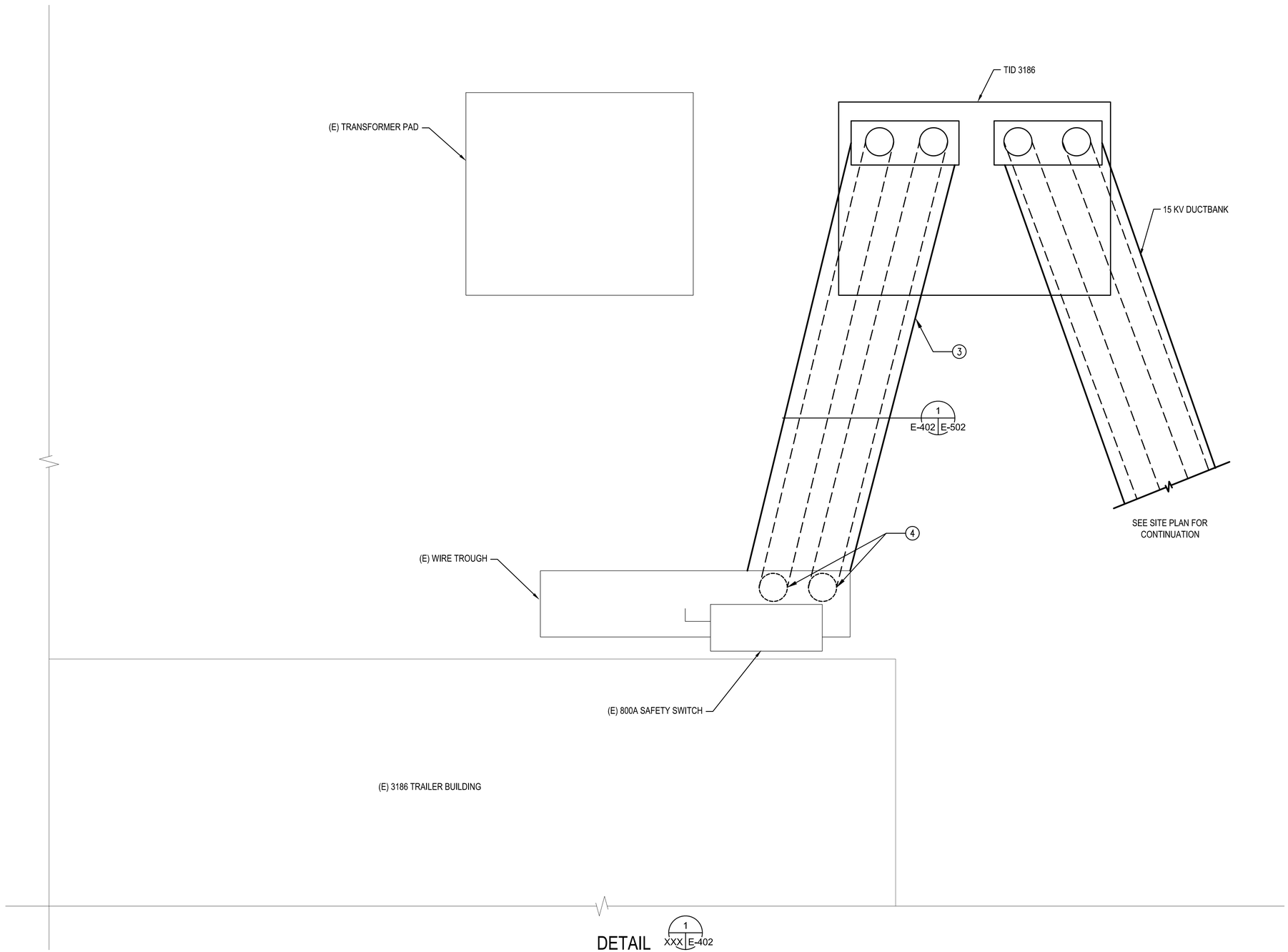

DETAIL 1 XXX E-402

BUILDING 3186 TRAILER

SCALE: 1" = 20"

GENERAL NOTES

1. ALL WORK SHALL BE NEW AND PROVIDED UNDER THIS CONTRACT UNLESS SPECIFICALLY MARKED "EXISTING", "EXIST.", OR "(E)".
2. VERIFY LOCATION AND DIMENSIONS OF EXISTING EQUIPMENT AND COORDINATE ALL WORK PRIOR TO THE START OF CONSTRUCTION.

NOTES

3. PROVIDE 2 SETS 4 #500 + 1 #2/0 GROUND IN DUCTBANK.
4. TRANSITION FROM PVC TO 3-1/2" RMC AT GRADE. ROUTE RMC TO WIRE TROUGH.

SYM	DESCRIPTION	DATE	APPR.

COMMONWEALTH OF VIRGINIA
SAMUEL J. STATZ
Lic. No. 045162
14 JANUARY 2016
PROFESSIONAL ENGINEER

SUMMER CONSULTANTS INCORPORATED
7900 Westpark Drive | Suite A405 | McLean, VA 22102
(703) 556-8820 | www.summerconsultants.com

APPROVED
FOR COMMANDER NAVFAC
ACTIVITY
SATISFACTORY TO DATE
DES KU DRW EP CHK SS/CPC
<<PM/DM>>
BRANCH MANAGER
CHIEF ENG/ARCH
<<XXX>>

DEPARTMENT OF THE NAVY
NAVAL FACILITIES ENGINEERING COMMAND
NAVAL FACILITIES ENGINEERING COMMAND - WASHINGTON
RESIDENT OFFICER IN CHARGE OF CONSTRUCTION
MARINE CORPS BASE QUANTICO, VIRGINIA
QUANTICO, VA
MARINE CORPS BASE QUANTICO

P714 REPAIR OCS ELECTRIC SYSTEM SUBSTATION, CONDUITS, AND CABLES

DETAIL BUILDING 3186 TRAILER

SCALE: AS NOTED
EPROJECT NO.: QU1536M
CONSTR. CONTR. NO.
NAVFAC DRAWING NO. 3190000
SHEET 91 OF 105
E-402

DRAWFORM REVISION: 10 MARCH 2009

GRAPHIC SCALES
1"=1'-0" 12" 6" 0 12" 24"
CAUTION: IF THIS DRAWING IS A REDUCTION, GRAPHIC SCALES MUST BE USED.

FILE NAME: E-402 BUILDING.DWG
OUR REF: XXX.XX
PROJECT: XXXXXXXX
PLOT DATE: 1/13/2016 11:37:04 PM

GENERAL NOTES

1. ALL WORK SHALL BE NEW AND PROVIDED UNDER THIS CONTRACT UNLESS SPECIFICALLY MARKED "EXISTING", "EXIST.", OR "(E)".
2. VERIFY LOCATION AND DIMENSIONS OF EXISTING EQUIPMENT AND COORDINATE ALL WORK PRIOR TO THE START OF CONSTRUCTION.

NOTES

3. USE APPROVED REAMING MEANS TO REMOVE SHARP EDGES AND INSTALL APPROVED ADAPTER WITH INSULATED BUSHING PRIOR TO PULLING CONDUCTORS.
4. CONCRETE ENCASE CONDUIT UNTIL MINIMUM BURIAL DEPTH IS ACHIEVED. MINIMUM 3" COVER ON ALL SIDES WITH 3000 PSI CONCRETE.

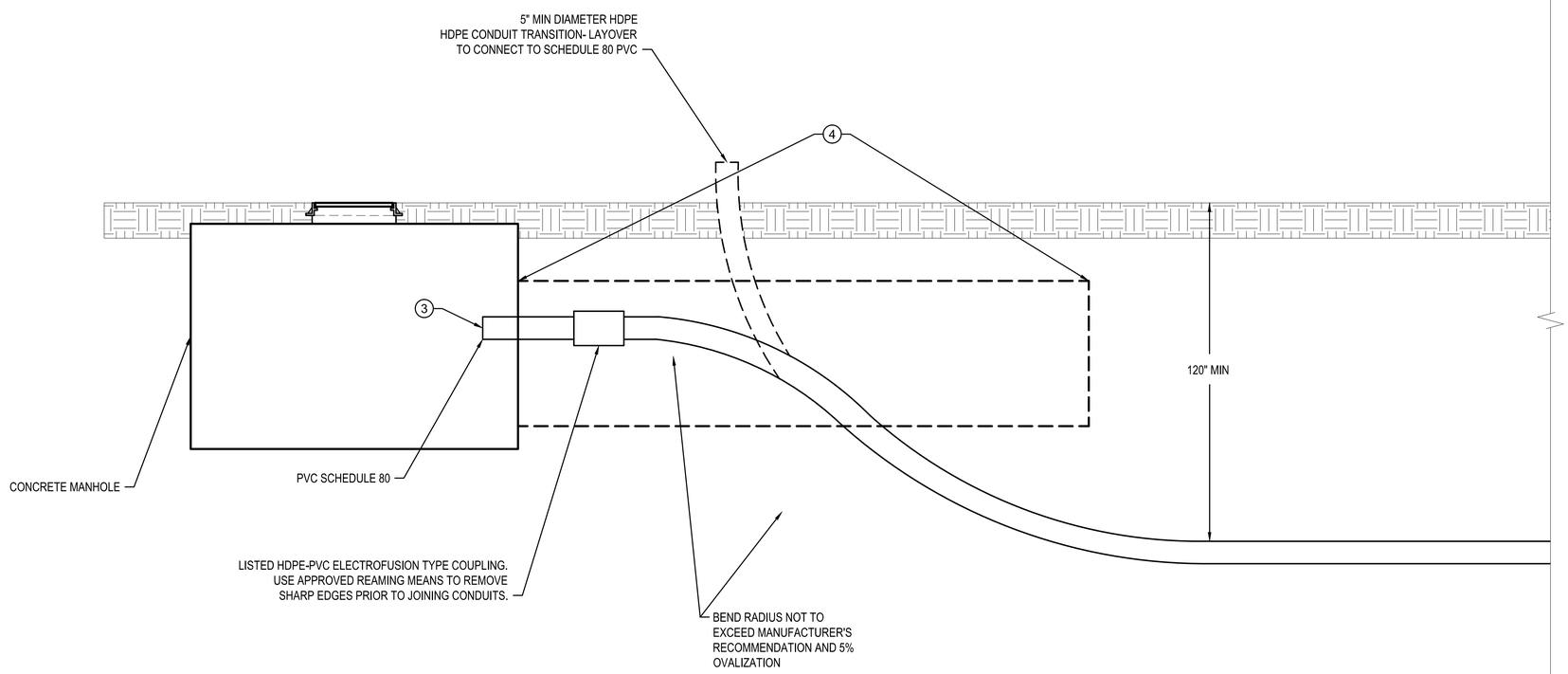

DETAIL 1 ES-106, ES-107 | E-403
DIRECTIONAL BORE TO MANHOLE TRANSITION

SCALE: 1/4" = 1'-0"

SYM	DESCRIPTION	DATE	APPR

NAVFAC

COMMONWEALTH OF VIRGINIA
SAMUEL J. STATZ
Lic. No. 045162
14 JANUARY 2016
PROFESSIONAL ENGINEER

SUMMER CONSULTANTS INCORPORATED
7900 Westpark Drive | Suite A405 | McLean, VA 22102
(703) 556-8820 | www.summerconsultants.com

APPROVED
FOR COMMANDER NAVFAC
ACTIVITY
SATISFACTORY TO DATE
DES KU DRW EP CHK SS/CPC
<<PM/DM>>
BRANCH MANAGER
CHIEF ENG/ARCH
<<XXX>>

DEPARTMENT OF THE NAVY
NAVAL FACILITIES ENGINEERING COMMAND
RESIDENT OFFICER IN CHARGE OF CONSTRUCTION
NAVAL FACILITIES ENGINEERING COMMAND - WASHINGTON
MARINE CORPS BASE QUANTICO
MARINE CORPS BASE, QUANTICO, VIRGINIA
QUANTICO, VA
P714 REPAIR OCS ELECTRIC SYSTEM
SUBSTATION, CONDUITS, AND CABLES
DETAIL DIRECTIONAL BORE

SCALE: AS NOTED
EPROJECT NO.: QU1536M
CONSTR. CONTR. NO.
NAVFAC DRAWING NO. 3190001
SHEET 92 OF 105
E-403

DRAWFORM REVISION: 10 MARCH 2009

GRAPHIC SCALES
1/4"=1'-0" 4' 2' 0 4' 8'
CAUTION: IF THIS DRAWING IS A REDUCTION, GRAPHIC SCALES MUST BE USED.

FILE NAME: E-403 DETAIL DIRECTIONAL BORE.DWG
OUR REF: XXX.XX
PROJECT: XXXXXXXX
PLOT DATE: 1/13/2016 11:37:06 PM

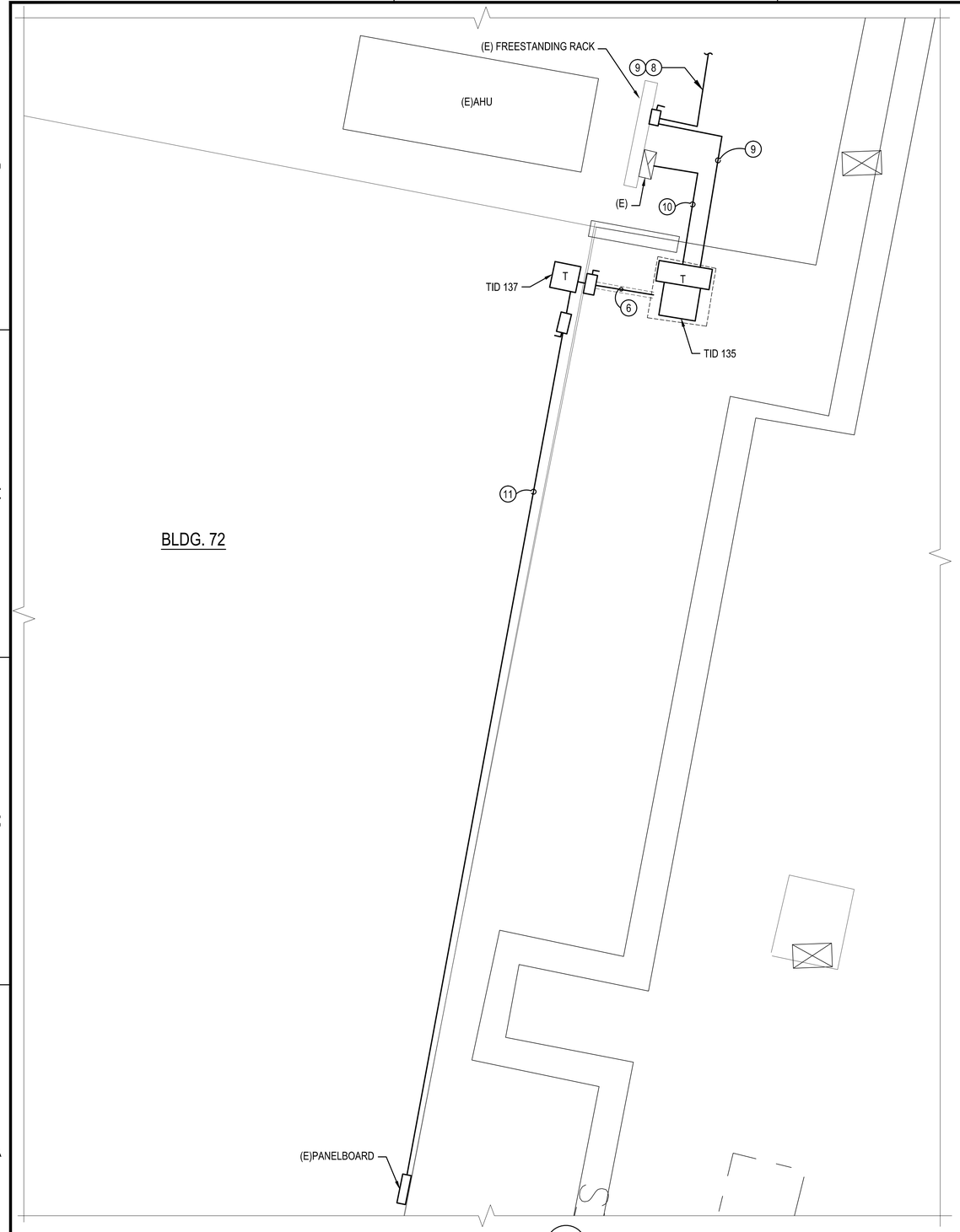

DETAIL 1 ES-108 E-404
BLDG 72 SERVICE ENTRANCE
SCALE: 1/8" = 1'-0"

NOTES

9. PROVIDE 2#8 + 1#10 GRD. IN 1" CONDUIT DIRECT BURIED.
10. PROVIDE 4#250 + 1#4 GRD. IN 3 " CONDUIT DIRECT BURIED.
11. PROVIDE 4#350 + 1#3GRD. IN 3 " CONDUIT MOUNTED TO THE INTERIOR WALL. OVER A SCHEDULED OUTAGE DISCONNECT EXISTING FEEDER AND CONNECT FEEDER PROVIDED UNDER THIS CONTRACT TO OPERATE AS BEFORE.
12. DRILL HOLE FOR CONDUIT AND SEAL PENETRATION WATER TIGHT.
13. MOUNT BREAKER INSIDE OF THE TRANSFORMER SECONDARY COMPARTMENT.

GENERAL NOTES

1. ALL WORK SHALL BE NEW AND PROVIDED UNDER THIS CONTRACT UNLESS SPECIFICALLY MARKED "EXISTING", "EXIST.", OR "(E)".
2. VERIFY LOCATION AND DIMENSIONS OF EXISTING EQUIPMENT AND COORDINATE ALL WORK PRIOR TO THE START OF CONSTRUCTION.

NOTES

3. TRANSITION FROM PVC TO RMC AT GRADE 12-18" BELOW GRADE.
4. PROVIDE SERVICE ENTRANCE RATED DISCONNECT SWITCH ON EXTERIOR OF BUILDING. PROVIDE SERVICE ENTRANCE RATED DISCONNECT SWITCH ON EXTERIOR OF BUILDING. MAXIMUM HEIGHT OF HANDLE SHALL BE 5'-0".
5. SEE FEEDER SCHEDULE FOR FEEDER SIZE.
6. PROVIDE 3 #2/0 +1#2 GRD IN 2-1/2" CONDUIT/DUCTBANK.
7. DISTANCE VARIES. SEE SITE- PLAN FOR INDIVIDUAL BUILDINGS.
8. ROUTE TO WALKING BRIDGE SUPPORT, UP TO WALKING BRIDGE, ACROSS TRAIN TRACKS TO LIGHT FIXTURES. SEE SITE PLAN ES-108 FOR CONTINUATION.

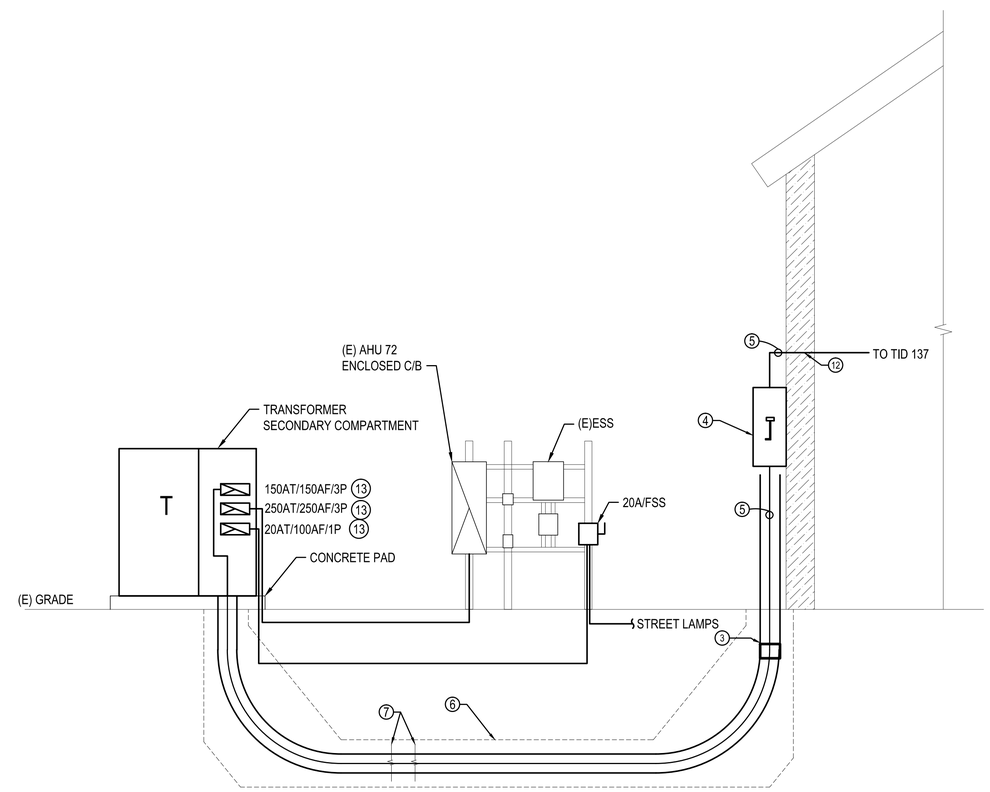

BLDG 72 SERVICE ENTRANCE
NO SCALE

FEEDER SCHEDULE						
TRANSFORMER	BUILDING NUMBER	SECONDARY DISCONNECT SWITCH	SECONDARY FEEDER	ABOVE GRADE CONDUIT SIZE	EXTERIOR MATERIAL	DUCTBANK DETAIL
TID 135	72	200A/3P/FSS@150A	SEE NOTES	2-1/2"	METAL	1/E-502
TID 137	72	400A/3P/FSS@300A	SEE NOTES	3"	METAL	

GRAPHIC SCALES
1/8"=1'-0" 8' 4' 0 8' 16'
CAUTION: IF THIS DRAWING IS A REDUCTION, GRAPHIC SCALES MUST BE USED.

SYM	DESCRIPTION	DATE	APPR.

NAVFAC

COMMONWEALTH OF VIRGINIA
SAMUEL J. STATZ
Lic. No. 045162
14 JANUARY 2016
PROFESSIONAL ENGINEER

SUMMER CONSULTANTS INCORPORATED
7900 Westpark Drive | Suite A405 | McLean, VA 22102
(703) 556-8820 | www.summerconsultants.com

APPROVED
FOR COMMANDER NAVFAC
ACTIVITY
SATISFACTORY TO DATE
DES KU DRW EP CHK SS/CPC
<<PM/DM>>
BRANCH MANAGER
CHIEF ENG/ARCH
<<XX>>

DEPARTMENT OF THE NAVY
NAVAL FACILITIES ENGINEERING COMMAND
RESIDENT OFFICER IN CHARGE OF CONSTRUCTION
NAVAL FACILITIES ENGINEERING COMMAND - WASHINGTON
MARINE CORPS BASE QUANTICO
MARINE CORPS BASE, QUANTICO, VIRGINIA
QUANTICO, VA

P714 REPAIR OCS ELECTRIC SYSTEM
SUBSTATION, CONDUITS, AND CABLES

DETAIL SERVICE ENTRANCE BLDG. 72

SCALE: AS NOTED
EPROJECT NO.: QU1536M
CONSTR. CONTR. NO.
NAVFAC DRAWING NO. 3190002
SHEET 93 OF 105
E-404

DRAWFORM REVISION: 10 MARCH 2009

FILE NAME: E-404 DETAIL.DWG
OUR REF: XXX.XX
PROJECT: XXXXXXXX
PLOT DATE: 1/13/2016 11:37:15 PM

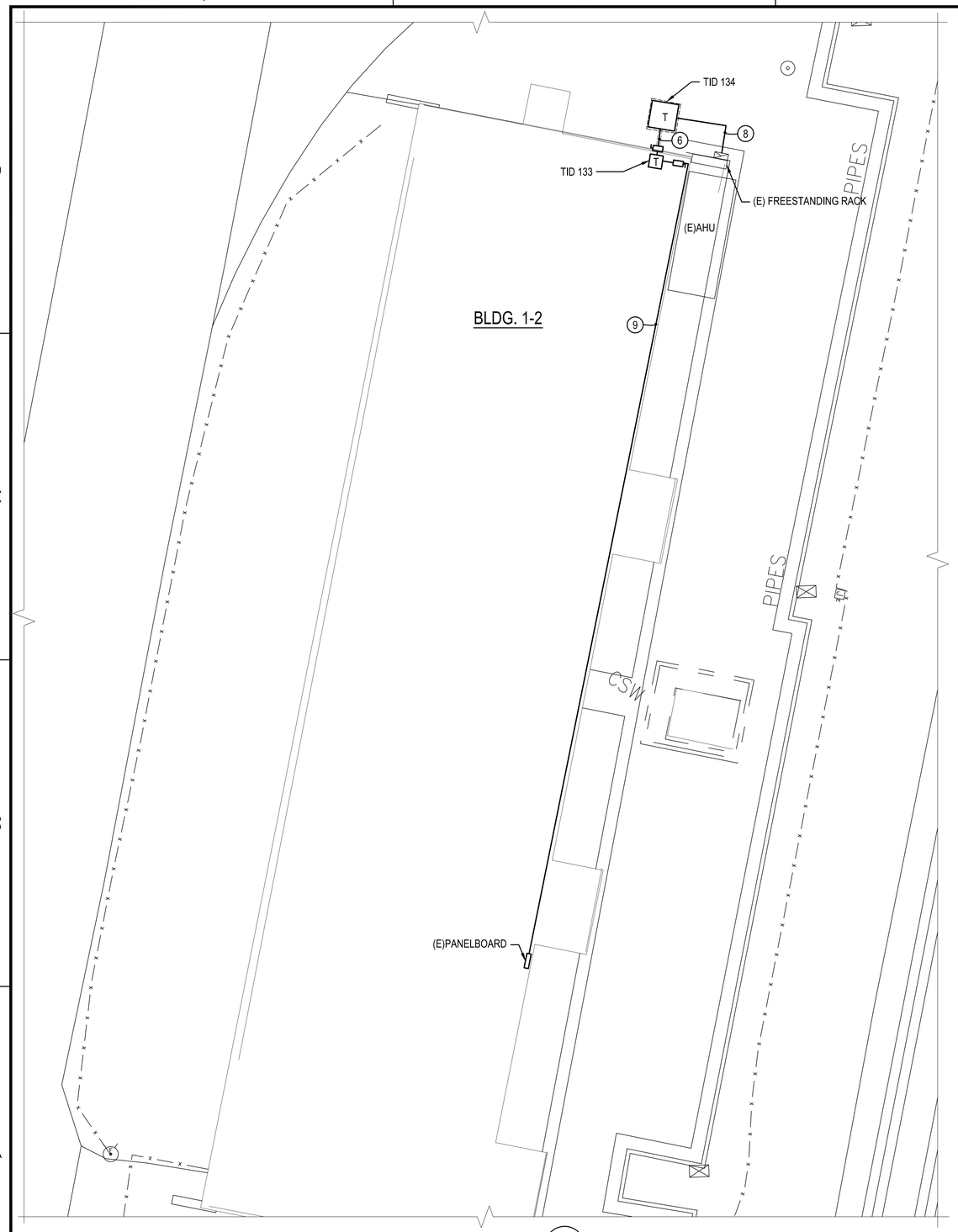

DETAIL 1 ES-110 E-405
BLDG 1-2 SERVICE ENTRANCE
SCALE: 1/16" = 1'-0"

NOTES

(10) DRILL HOLE FOR CONDUIT AND SEAL PENETRATION WATER TIGHT.

(11) MOUNT BREAKER INSIDE OF THE TRANSFORMER SECONDARY COMPARTMENT.

GENERAL NOTES

(1) ALL WORK SHALL BE NEW AND PROVIDED UNDER THIS CONTRACT UNLESS SPECIFICALLY MARKED "EXISTING", "EXIST.", OR "(E)".

(2) VERIFY LOCATION AND DIMENSIONS OF EXISTING EQUIPMENT AND COORDINATE ALL WORK PRIOR TO THE START OF CONSTRUCTION.

NOTES

(3) TRANSITION FROM PVC TO RMC AT GRADE 12-18" BELOW GRADE.

(4) PROVIDE SERVICE ENTRANCE RATED DISCONNECT SWITCH ON EXTERIOR OF BUILDING. MAXIMUM HEIGHT OF HANDLE SHALL BE 5'-0".

(5) SEE FEEDER SCHEDULE FOR FEEDER SIZE.

(6) PROVIDE 3 #2/0 +1#2 GRD IN 2-1/2" CONDUIT/DUCTBANK.

(7) DISTANCE VARIES. SEE SITE PLAN FOR INDIVIDUAL BUILDINGS.

(8) PROVIDE 4#250 + 1# 4 GRD. IN 3 " CONDUIT DIRECT BURIED.

(9) PROVIDE 4#4/0 + 1#4 GRD. IN 2-1/2 " CONDUIT MOUNTED TO THE INTERIOR WALL. OVER A SCHEDULED OUTAGE DISCONNECT EXISTING FEEDER AND CONNECT FEEDER PROVIDED UNDER THIS CONTRACT TO OPERATE AS BEFORE.

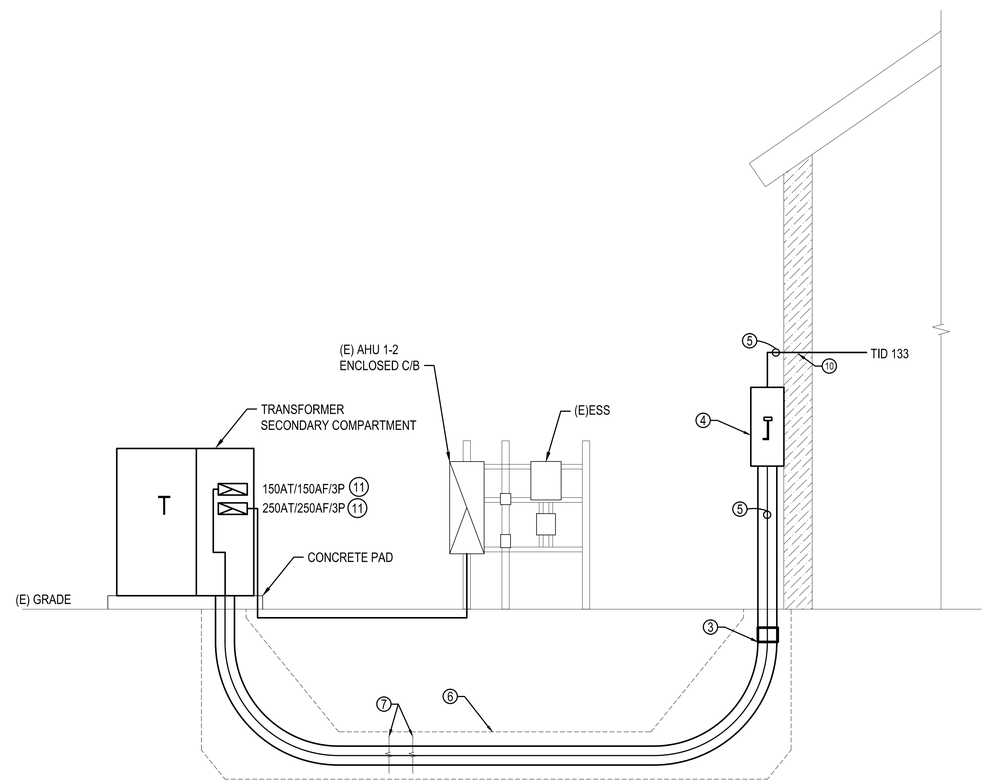

BLDG 1-2 SERVICE ENTRANCE
NO SCALE

FEEDER SCHEDULE

TRANSFORMER	BUILDING NUMBER	SECONDARY DISCONNECT SWITCH	SECONDARY FEEDER	ABOVE GRADE CONDUIT SIZE	EXTERIOR MATERIAL	DUCTBANK DETAIL
TID 134	1-2	200A/3P/FSS@150A	SEE NOTES	2-1/2"	METAL	1/E-502
TID 133	1-2	400A/3P/FSS@225A	SEE NOTES	2-1/2"	METAL	1/E-502

GRAPHIC SCALES
1/16"=1'-0" 16' 8' 0 16' 32'

CAUTION: IF THIS DRAWING IS A REDUCTION, GRAPHIC SCALES MUST BE USED.

SYM	DESCRIPTION	DATE	APPR

NAVFAC

COMMONWEALTH OF VIRGINIA
SAMUEL J. STATZ
Lic. No. 045162
14 JANUARY 2016
PROFESSIONAL ENGINEER

SUMMER CONSULTANTS INCORPORATED
7900 Westpark Drive | Suite A405 | McLean, VA 22102
(703) 556-8820 | www.summerconsultants.com

APPROVED
FOR COMMANDER NAVFAC
ACTIVITY
SATISFACTORY TO DATE
DES KU DRW EP CHK SS/CPC
<<PM/DM>>
BRANCH MANAGER
CHIEF ENG/ARCH
<<XX>>

DEPARTMENT OF THE NAVY
NAVAL FACILITIES ENGINEERING COMMAND
RESIDENT OFFICER IN CHARGE OF CONSTRUCTION
NAVAL FACILITIES ENGINEERING COMMAND - WASHINGTON
MARINE CORPS BASE, QUANTICO, VIRGINIA
MARINE CORPS BASE QUANTICO
QUANTICO, VA
P714 REPAIR OCS ELECTRIC SYSTEM
SUBSTATION, CONDUITS, AND CABLES
DETAIL SERVICE ENTRANCE BLDG. 1-2

SCALE: AS NOTED
EPROJECT NO.: QU1536M
CONSTR. CONTR. NO.
NAVFAC DRAWING NO.
3190003
SHEET 94 OF 105
E-405
DRAWFORM REVISION: 10 MARCH 2009

FILE NAME: E-404 DETAIL.DWG
OUR REF: XXX.XX
PROJECT: XXXXXXXX
PLOT DATE: 1/13/2016 11:39:58 PM

GENERAL NOTES

1. ALL WORK SHALL BE NEW AND PROVIDED UNDER THIS CONTRACT UNLESS SPECIFICALLY MARKED "EXISTING", "EXIST.", OR "(E)".
2. VERIFY LOCATION AND DIMENSIONS OF EXISTING EQUIPMENT AND COORDINATE ALL WORK PRIOR TO THE START OF CONSTRUCTION.

NOTES

3. SEE TEMPORARY POWER SCHEDULE FOR FEEDER SIZE.
4. DISTANCE VARIES. SEE SITE PLAN FOR INDIVIDUAL BUILDINGS.

TEMPORARY POWER SCHEDULE

BUILDING NUMBER	GENERATOR SIZE	SIZE OF TRANSFORMER	SECONDARY FEEDER	CONDUIT SIZE	MANUAL TRANSFER SWITCH
5001	1000	TID 523, 1000 KVA	4 SETS OF 3 #350 + #3/0	(4) 2-1/2"	1200
5002	1500	TID 522, 1150 KVA	4 SETS OF 3 #500 + #4/0	(4) 3"	1600
5005	1000	PMT-M1, 1000 KVA	4 SETS OF 3 #350 + #3/0	(4) 2-1/2"	1200
2189N	300	PMT-2, 300 KVA	3 SETS OF 4 #350 + #2/0	(3) 2-1/2"	1000
3083	500	TID 148, 500 KVA	4 SETS OF 4 #500 + #4/0	(4) 3"	1600
3065	500	TID 142, 500 KVA	4 SETS OF 4 #500 + #4/0	(4) 3"	1600
5003	300	TID 141, 300 KVA	3 SETS OF 4 #350 + #2/0	(3) 2-1/2"	1000
2118	125	TID 139, 112.5 KVA	4 #400 + #4	3"	300
3256A	40	TID 138, 15 KVA	4 #8 + #10	3/4"	60

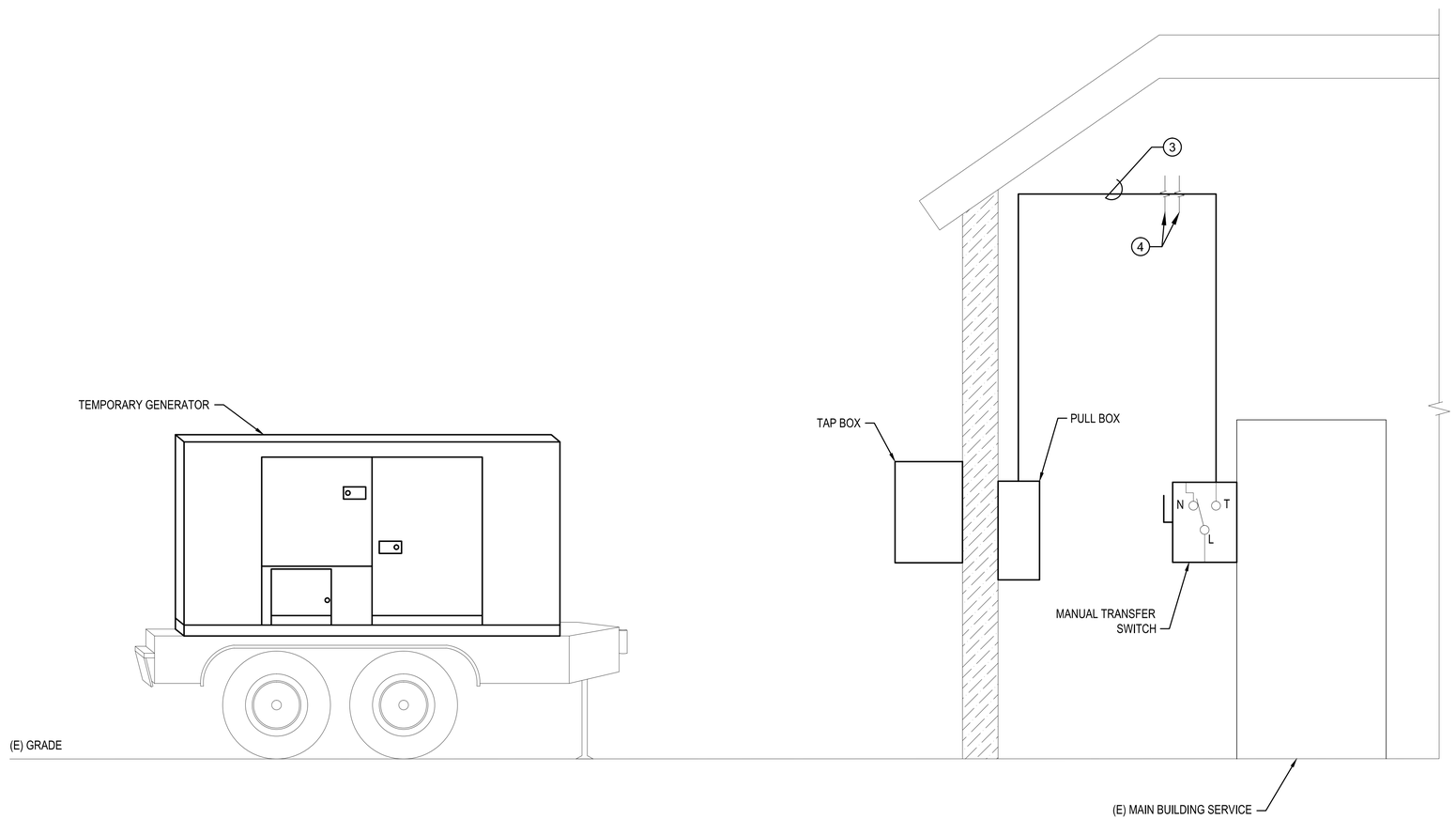

1 XXX E-406 DETAIL
TYPICAL TEMPORARY FEED
NOT TO SCALE

SYM	DESCRIPTION	DATE	APPR

NAVFAC

COMMONWEALTH OF VIRGINIA
SAMUEL J. STATZ
Lic. No. 045162
14 JANUARY 2016
PROFESSIONAL ENGINEER

SUMMER CONSULTANTS INCORPORATED
7900 Westpark Drive | Suite 8405 | McLean, VA 22102
(703) 556-8820 | www.summerconsultants.com

APPROVED
FOR COMMANDER NAVFAC
ACTIVITY
SATISFACTORY TO DATE
DES KU DRW EP CHK SS/CPC
<<PM/DM>>
BRANCH MANAGER
CHIEF ENG/ARCH
<<XXX>>

DEPARTMENT OF THE NAVY
NAVAL FACILITIES ENGINEERING COMMAND
RESIDENT OFFICER IN CHARGE OF CONSTRUCTION
NAVAL FACILITIES ENGINEERING COMMAND - WASHINGTON
MARINE CORPS BASE, QUANTICO, VIRGINIA
MARINE CORPS BASE QUANTICO
QUANTICO, VA
P714 REPAIR OCS ELECTRIC SYSTEM SUBSTATION, CONDUITS, AND CABLES
DETAIL TYPICAL TEMPORARY FEED

SCALE: AS NOTED
EPROJECT NO.: QU1536M
CONSTR. CONTR. NO.
NAVFAC DRAWING NO. 3190004
SHEET 95 OF 105
E-406

DRAWFORM REVISION: 10 MARCH 2009

FILE NAME: E-603.DWG
OUR REF: XXX.XX
PROJECT: XXXXXXXX
PLOT DATE: 1/13/2016 11:37:20 PM