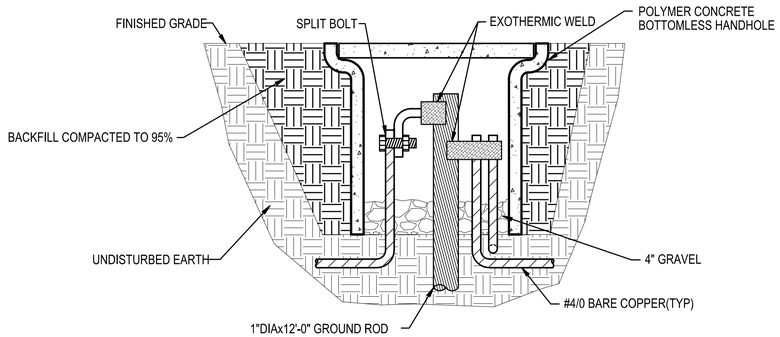

4 ES-401 E-501 **DETAIL**

GROUND ROD TESTING POINT

NOT TO SCALE

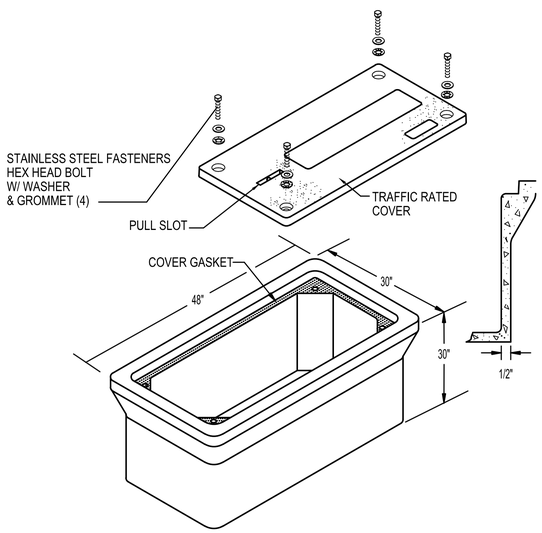

THIS DETAIL REFERENCED FROM MULTIPLE SHEETS

5 E-501 **DETAIL**

HANDHOLE

NOT TO SCALE

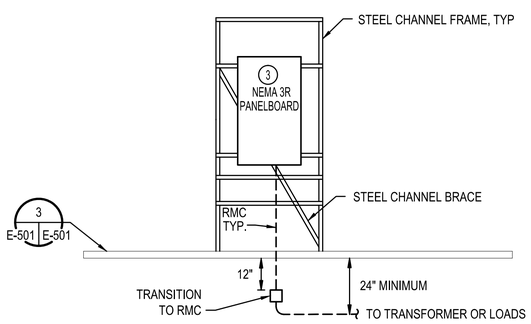

6 ES-115 E-501 **DETAIL**

U-CHANNEL SUPPORT

NOT TO SCALE

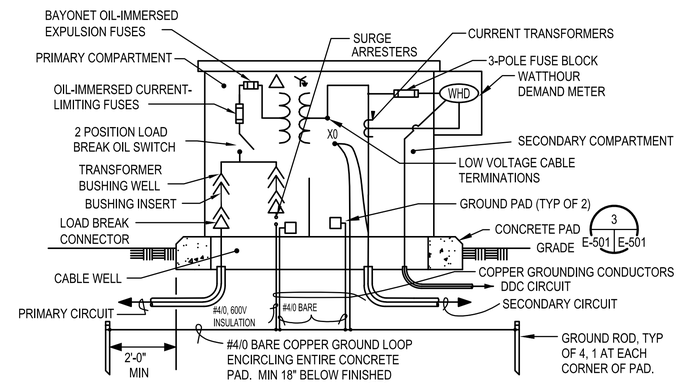

1 E-501 THIS DETAIL IS REFERENCED FROM MULTIPLE SHEETS

DETAIL

TRANSFORMER DETAIL

NOT TO SCALE

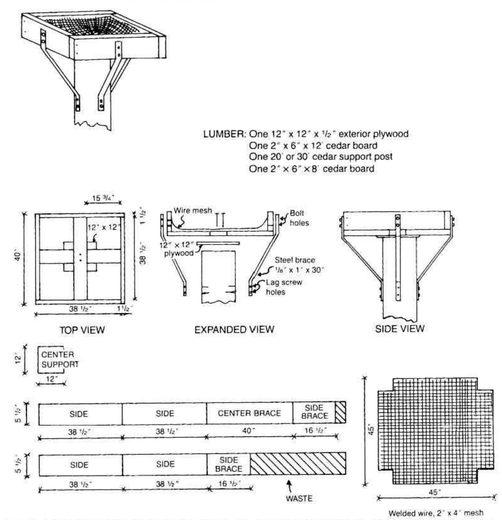

Fig. 1. Diagram for an osprey nest platform. To construct the platform, the following materials are required: (1) 2" x 6" x 12' cedar board; (1) 2" x 6" x 8' cedar board; (1) 12" x 12" x ½" exterior plywood; (1) 45" X 45" piece of heavy duty wire mesh; (20) galvanized 40D nails; (4) ⅛" x 1" x 30" steel strapping; (8) 2 ½" x ½" bolts with washers and nuts; (8) 4" x ½" lag screws; (1) 6" or 8" diameter cedar post, 20' to 30' long; and wood preservative and stain. To prevent splitting, pre-drill all nail and bolt holes. Treat the entire structure with wood preservative and stain brown. To encourage use by ospreys, wire several sticks into the platform (National Wildlife Federation 1987; used with permission).

2 G-001 E-501 **DETAIL**

OSPREY NEST PLATFORM

NO SCALE

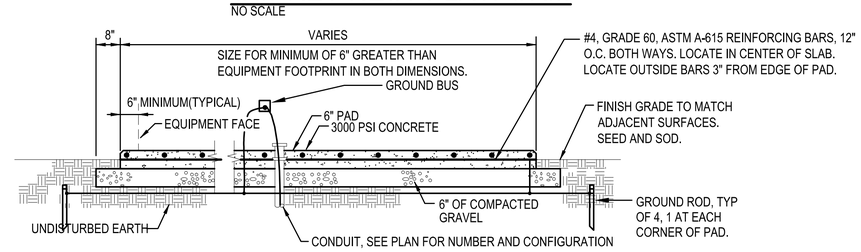

3 E-501 E-501 **DETAIL**

CONCRETE OUTDOOR PAD

NOT TO SCALE

GENERAL NOTES

1. ALL WORK SHALL BE NEW AND PROVIDED UNDER THIS CONTRACT UNLESS SPECIFICALLY MARKED "EXISTING", "EXIST.", OR "(E)".
2. VERIFY LOCATION AND DIMENSIONS OF EXISTING EQUIPMENT AND COORDINATE ALL WORK PRIOR TO THE START OF CONSTRUCTION.

NOTES

3. PROVIDE 100A, 3Ø, 4W 120/208V 30 POLE PANELBOARD IN NEMA 3R ENCLOSURE WITH (18) 20A SINGLE POLE BREAKERS .

SYM	DESCRIPTION	DATE	APR

NAVFAC

COMMONWEALTH OF VIRGINIA
SAMUEL J. STATZ
Lic. No. 045162
14 JANUARY 2016
PROFESSIONAL ENGINEER

SUMMER CONSULTANTS INCORPORATED
7900 Westpark Drive | Suite A405 | McLean, VA 22102
(703) 556-8820 | www.summerconsultants.com

APPROVED

FOR COMMANDER NAVFAC

ACTIVITY

SATISFACTORY TO DATE

DES KU DRW EP CHK SS/CPC

<<PM/DM>>

BRANCH MANAGER

CHIEF ENG/ARCH

<<XXX>>

DEPARTMENT OF THE NAVY
NAVAL FACILITIES ENGINEERING COMMAND
RESIDENT OFFICER IN CHARGE OF CONSTRUCTION
NAVAL FACILITIES ENGINEERING COMMAND - WASHINGTON
MARINE CORPS BASE QUANTICO
MARINE CORPS BASE, QUANTICO, VIRGINIA
QUANTICO, VA

P714 REPAIR OCS ELECTRIC SYSTEM SUBSTATION, CONDUITS, AND CABLES

DETAILS

SCALE: AS NOTED
EPROJECT NO.: QU1536M
CONSTR. CONTR. NO.
NAVFAC DRAWING NO. 3190005
SHEET 96 OF 105

E-501

DRAWFORM REVISION: 10 MARCH 2009

FILE NAME: E-501 DETAILS.DWG
OUR REF: XXX.XX
PROJECT: XXXXXXXX
PLOT DATE: 1/13/2016 11:37:23 PM

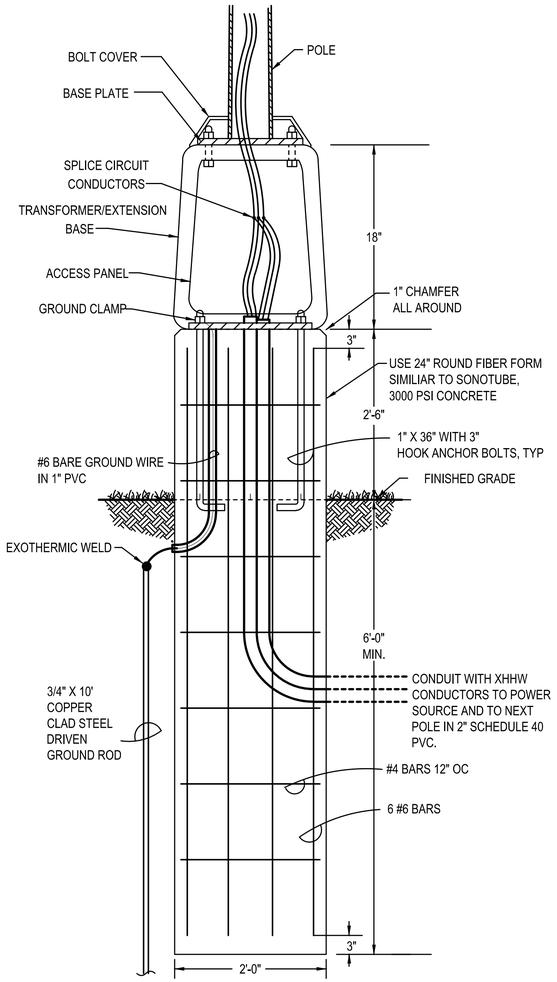

DETAIL 5 E-502 THIS DETAIL IS REFERENCED FROM MULTIPLE SHEETS

CONCRETE POLE BASE

NOT TO SCALE

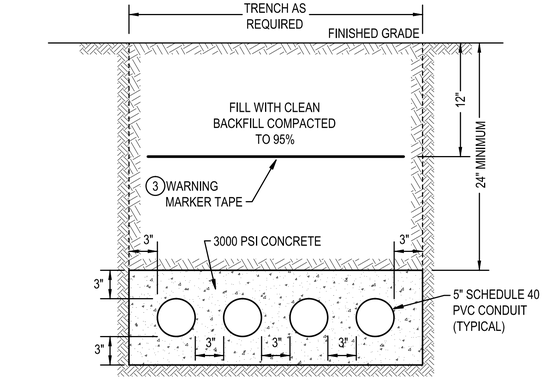

DETAIL 3 E-502 THIS DETAIL IS REFERENCED FROM MULTIPLE SHEETS

UNDERGROUND 4-WAY CONCRETE DUCT BANK

NOT TO SCALE

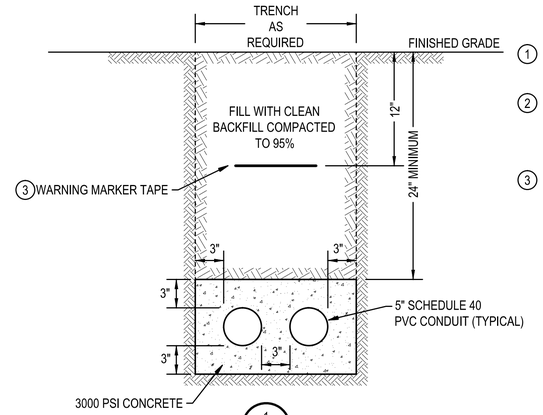

DETAIL 1 E-502 THIS DETAIL IS REFERENCED FROM MULTIPLE SHEETS

UNDERGROUND 2-WAY CONCRETE DUCT BANK

NOT TO SCALE

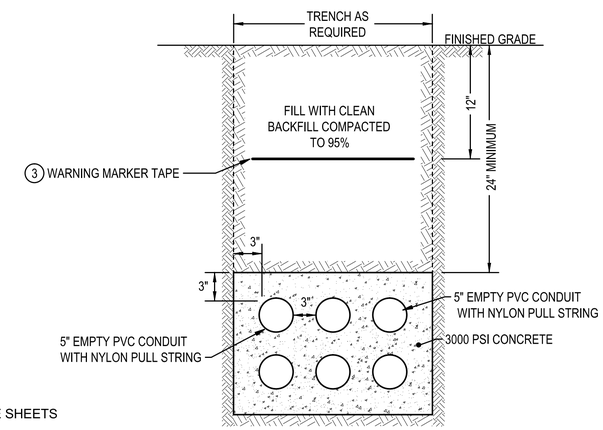

DETAIL 4 E-502 THIS DETAIL IS REFERENCED FROM MULTIPLE SHEETS

UNDERGROUND 6-WAY CONCRETE DUCT BANK

NOT TO SCALE

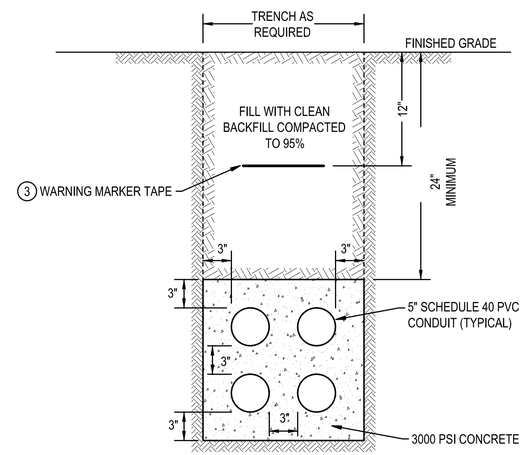

DETAIL 2 E-502 THIS DETAIL IS REFERENCED FROM MULTIPLE SHEETS

UNDERGROUND 4-WAY CONCRETE DUCT BANK

NOT TO SCALE

GENERAL NOTES

1. ALL WORK SHALL BE NEW AND PROVIDED UNDER THIS CONTRACT UNLESS SPECIFICALLY MARKED "EXISTING", "EXIST.", OR "(E)".
2. VERIFY LOCATION AND DIMENSIONS OF EXISTING EQUIPMENT AND COORDINATE ALL WORK PRIOR TO THE START OF CONSTRUCTION.

NOTES

3. PROVIDE WARNING TAPE ABOVE ALL UNDERGROUND DUCTS. FURNISH NON-BIODEGRADABLE WARNING MARKER TAPE OF A TYPE WHICH IS DETECTABLE BY AN ELECTRONIC DETECTION INSTRUMENT. INSTALL TAPE ABOVE UNDERGROUND DUCTS 12" BELOW FINISHED GRADE. PROVIDE RED COLORED TAPE INPRINTED "WARNING - BURIED ELECTRICAL LINES" IN BLACK INK MAXIMUM 5-0" OC.

SYM	DESCRIPTION	DATE	APPR

NAVFAC

COMMONWEALTH OF VIRGINIA
SAMUEL J. STATZ
Lic. No. 045162
14 JANUARY 2016
PROFESSIONAL ENGINEER

SUMMER CONSULTANTS INCORPORATED
7900 Westpark Drive | Suite A405 | McLean, VA 22102
(703) 556-8820 | www.summerconsultants.com

APPROVED
FOR COMMANDER NAVFAC
ACTIVITY
SATISFACTORY TO DATE
DES KU DRW EP CHK SS/CPC
<<PM/DM>>
BRANCH MANAGER
CHIEF ENG/ARCH
<<XX>>

DEPARTMENT OF THE NAVY
NAVAL FACILITIES ENGINEERING COMMAND
RESIDENT OFFICER IN CHARGE OF CONSTRUCTION
NAVAL FACILITIES ENGINEERING COMMAND - WASHINGTON
MARINE CORPS BASE, QUANTICO, VIRGINIA
QUANTICO, VA
MARINE CORPS BASE QUANTICO
P714 REPAIR OCS ELECTRIC SYSTEM SUBSTATION, CONDUITS, AND CABLES
DUCTBANK DETAILS

SCALE: AS NOTED
EPROJECT NO.: QU1536M
CONSTR. CONTR. NO.
NAVFAC DRAWING NO. 3190006
SHEET 97 OF 105
E-502

DRAWFORM REVISION: 10 MARCH 2009

FILE NAME: E-502 DETAILS.DWG
OUR REF: XXX.XX
PROJECT: XXXXXXXX
PLOT DATE: 1/13/2016 11:37:26 PM

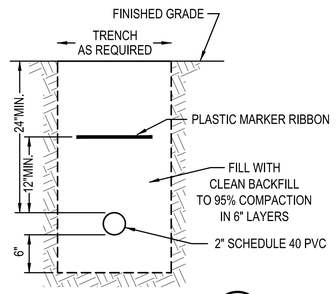

SECTION BURIED CONDUIT

ES-102, ES-108 | 5 | E-503

NOT TO SCALE

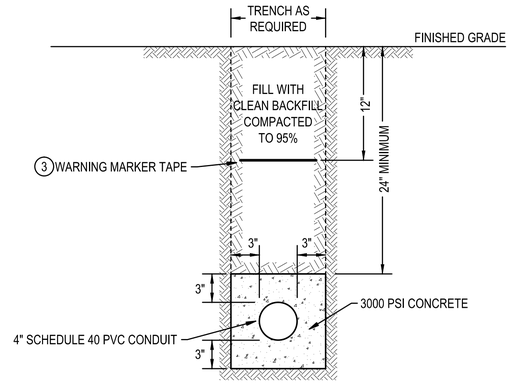

DETAIL UNDERGROUND 1-WAY CONCRETE DUCT BANK

ES-102 | 3 | E-503

NOT TO SCALE

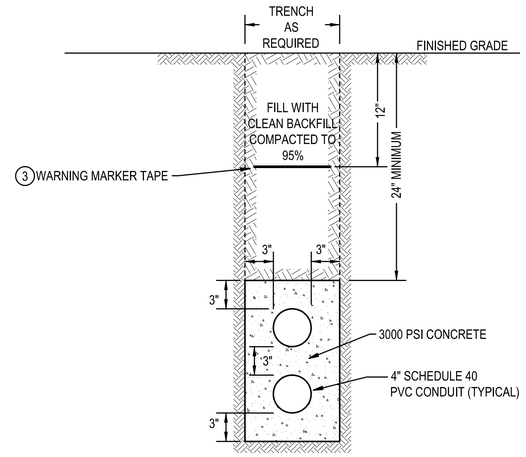

DETAIL UNDERGROUND 2-WAY CONCRETE DUCT BANK

1 | - | E-503 THIS DETAIL IS REFERENCED FROM MULTIPLE SHEETS

NOT TO SCALE

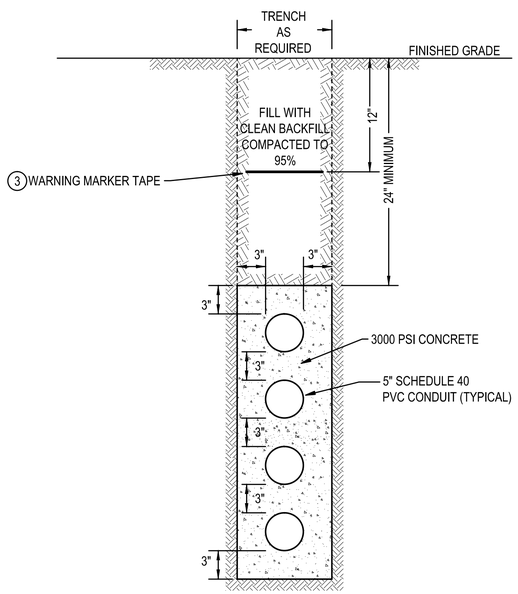

DETAIL UNDERGROUND 4-WAY CONCRETE DUCT BANK

ES-105 | 6 | E-503

NOT TO SCALE

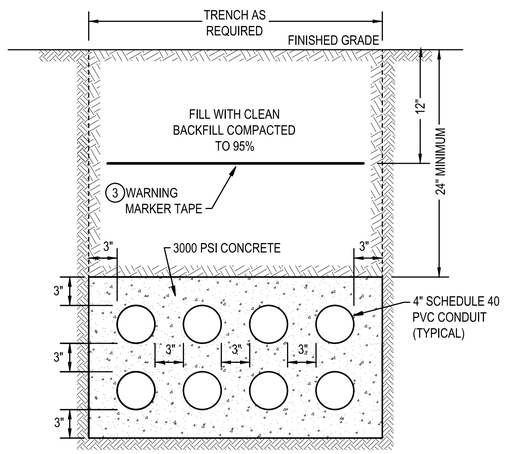

DETAIL UNDERGROUND 8-WAY CONCRETE DUCT BANK

4 | - | E-503 THIS DETAIL IS REFERENCED FROM MULTIPLE SHEETS

NOT TO SCALE

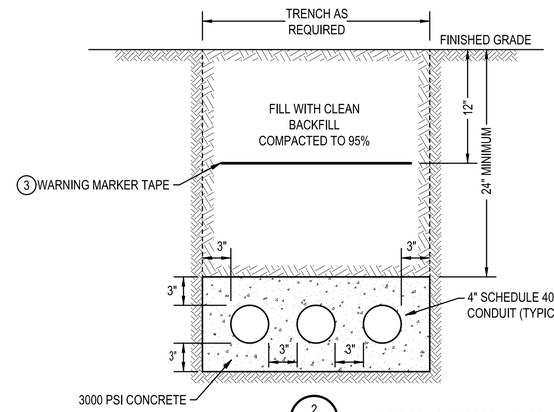

DETAIL UNDERGROUND 3-WAY CONCRETE DUCT BANK

2 | - | E-503 THIS DETAIL IS REFERENCED FROM MULTIPLE SHEETS

NOT TO SCALE

GENERAL NOTES

1. ALL WORK SHALL BE NEW AND PROVIDED UNDER THIS CONTRACT UNLESS SPECIFICALLY MARKED "EXISTING", "EXIST.", OR "(E)".
2. VERIFY LOCATION AND DIMENSIONS OF EXISTING EQUIPMENT AND COORDINATE ALL WORK PRIOR TO THE START OF CONSTRUCTION.

NOTES

3. PROVIDE WARNING TAPE ABOVE ALL UNDERGROUND DUCTS. FURNISH NON-BIODEGRADABLE WARNING MARKER TAPE OF A TYPE WHICH IS DETECTABLE BY AN ELECTRONIC DETECTION INSTRUMENT. INSTALL TAPE ABOVE UNDERGROUND DUCTS 12" BELOW FINISHED GRADE. PROVIDE RED COLORED TAPE INPRINTED "WARNING - BURIED ELECTRICAL LINES" IN BLACK INK MAXIMUM 5-0" OC.

SYM	DESCRIPTION	DATE	APPR

NAVFAC

COMMONWEALTH OF VIRGINIA
SAMUEL J. STATZ
Lic. No. 045162
14 JANUARY 2016
PROFESSIONAL ENGINEER

SUMMER CONSULTANTS INCORPORATED
7900 Westpark Drive | Suite A405 | McLean, VA 22102
(703) 556-8820 | www.summerconsultants.com

APPROVED

FOR COMMANDER NAVFAC

ACTIVITY

SATISFACTORY TO DATE

DES KU DRW EP CHK SS/CPC

<<PM/DM>>

BRANCH MANAGER

CHIEF ENG/ARCH

<<XX>>

DEPARTMENT OF THE NAVY
NAVAL FACILITIES ENGINEERING COMMAND
RESIDENT OFFICER IN CHARGE OF CONSTRUCTION

NAVAL FACILITIES ENGINEERING COMMAND - WASHINGTON
MARINE CORPS BASE QUANTICO
QUANTICO, VA

P714 REPAIR OCS ELECTRIC SYSTEM SUBSTATION, CONDUITS, AND CABLES

DUCTBANK DETAILS

SCALE: AS NOTED

EPROJECT NO.: QU1536M

CONSTR. CONTR. NO.

NAVFAC DRAWING NO. 3190007

SHEET 98 OF 105

E-503

DRAWFORM REVISION: 10 MARCH 2009

FILE NAME: E-502 DETAILS.DWG
OUR REF: XXX.XX
PROJECT: XXXXXXXX
PLOT DATE: 1/13/2016 11:37:27 PM

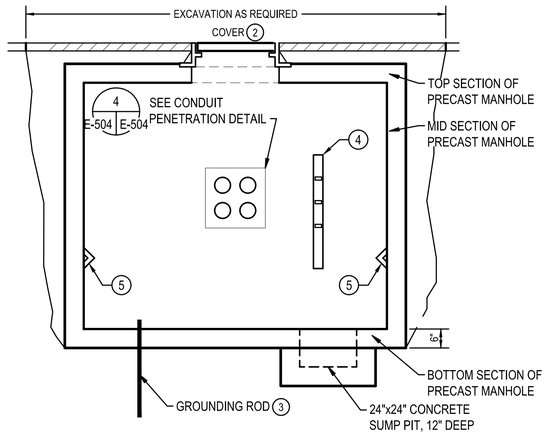

3 E-504 E-504 **SECTION**
8' x 8' MANHOLE
SCALE: 1/2" = 1'-0"

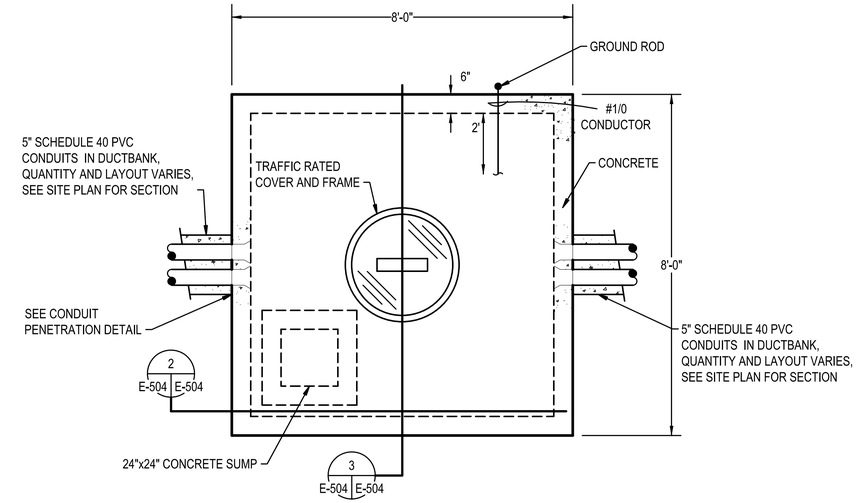

THIS DETAIL REFERENCE FROM MULTIPLE SHEETS 1 E-504 **DETAIL**
8' x 8' MANHOLE
SCALE: 1/2" = 1'-0"

GENERAL NOTES

1. ALL WORK SHALL BE NEW AND PROVIDED UNDER THIS CONTRACT UNLESS SPECIFICALLY MARKED "EXISTING", "EXIST.", OR "(E)".
2. VERIFY LOCATION AND DIMENSIONS OF EXISTING EQUIPMENT AND COORDINATE ALL WORK PRIOR TO THE START OF CONSTRUCTION.

NOTES

3. PROVIDE 1" STEEL PIPE SLEEVE THROUGH CONCRETE FLOOR TO PERMIT GROUND ROD TO BE DRIVEN. PROVIDE 3/4" x 10' LONG COPPER CLAD STEEL GROUND ROD. DRIVE UNTIL TOP OF GROUND ROD IS 6" ABOVE MANHOLE OR HAND HOLE FLOOR. SEAL WATER TIGHT AROUND GROUND ROD.
4. PROVIDE CABLE RACKS, SUPPORTED BY 36" LONG THERMOPLASTIC, NON-CONDUCTING BOLT INSERTS. PROVIDE SUITABLE PORCELAIN INSULATORS ON RACKS TO SUPPORT ALL CABLES. PROVIDE 2 RACKS EACH SIDE OF HANDHOLE PARALLEL TO MAIN CABLE RUN AND ONE RACK ON EACH SIDE OF HANDHOLE PERPENDICULAR TO CABLE RUN.
5. PROVIDE PULLING IRONS EMBEDED IN MANHOLE WALL OPPOSITE EACH CONDUIT ENTRANCE AND ANCHORED WITH EPOXY.

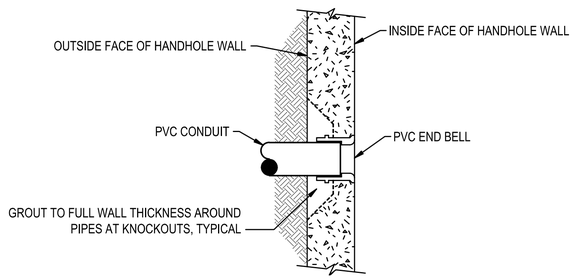

4 E-504 E-504 **DETAIL - HANDHOLE CONDUIT ENTRANCE**
NOT TO SCALE

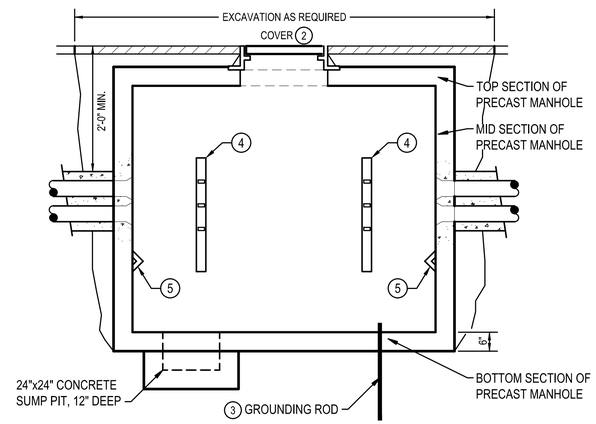

2 E-504 E-504 **SECTION**
8' x 8' MANHOLE
SCALE: 1/2" = 1'-0"

SYM	DESCRIPTION	DATE	APPR

NAVFAC

COMMONWEALTH OF VIRGINIA
SAMUEL J. STATZ
Lic. No. 045162
14 JANUARY 2016
PROFESSIONAL ENGINEER

SUMMER CONSULTANTS INCORPORATED
7900 Westpark Drive | Suite A405 | McLean, VA 22102
(703) 556-8820 | www.summerconsultants.com

APPROVED
FOR COMMANDER NAVFAC
ACTIVITY
SATISFACTORY TO DATE
DES KU DRW EP CHK SS/CPC
<<PM/DM>>
BRANCH MANAGER
CHIEF ENG/ARCH
<<XX>>

DEPARTMENT OF THE NAVY
NAVAL FACILITIES ENGINEERING COMMAND
RESIDENT OFFICER IN CHARGE OF CONSTRUCTION
NAVAL FACILITIES ENGINEERING COMMAND - WASHINGTON
MARINE CORPS BASE QUANTICO
MARINE CORPS BASE, QUANTICO, VIRGINIA
QUANTICO, VA

P714 REPAIR OCS ELECTRIC SYSTEM SUBSTATION, CONDUITS, AND CABLES

MANHOLE DETAILS

SCALE: AS NOTED
EPROJECT NO.: QU1536M
CONSTR. CONTR. NO.
NAVFAC DRAWING NO. 3190008
SHEET 99 OF 105

E-504

DRAWFORM REVISION: 10 MARCH 2009

FILE NAME: E-504 DETAILS.DWG
OUR REF: XXX.XX
PROJECT: XXXXXXXX
PLOT DATE: 1/13/2016 11:37:31 PM

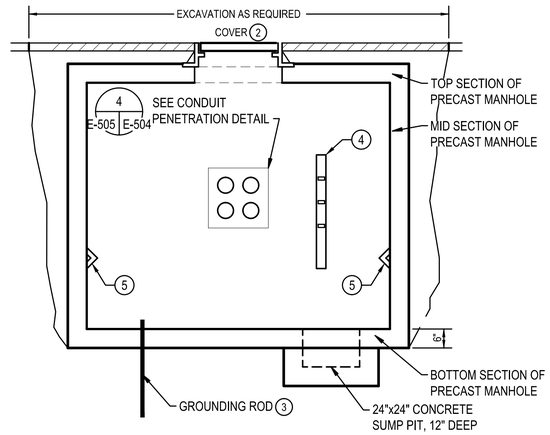

3
E-505 E-505

SECTION
8' x 12' MANHOLE

SCALE: 1/2" = 1'-0"

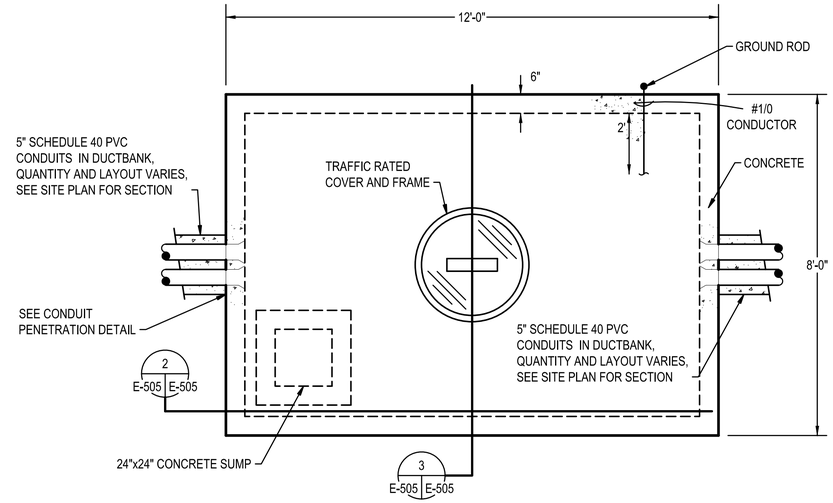

1
ES-104 E-505

DETAIL
8' x 12' MANHOLE

SCALE: 1/2" = 1'-0"

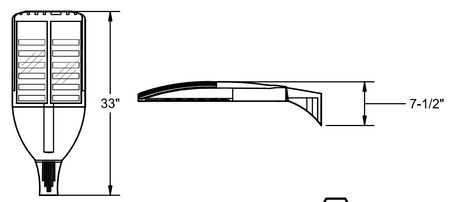

LIGHTING FIXTURE TYPE (1)

GENERAL:	L.E.D. AREA LIGHT, POLE MOUNT.
HOUSING:	DIE CAST ALUMINUM HOUSING.
FINISH:	DARK BRONZE BAKED ENAMEL PAINT FINISH.
L.E.D.s AND DRIVERS:	MINIMUM L70 AT 100,000 HOURS, MINIMUM 9,000 LUMENS AT APPROXIMATELY 140 TOTAL WATTS, 4000K CCT, MVOLT, 30% BI LEVEL SWITCHING.
REFLECTOR:	TYPE III MEDIUM DISTRIBUTION.
MOUNTING:	POLE MOUNTED AT 26 FEET ABOVE GRADE.

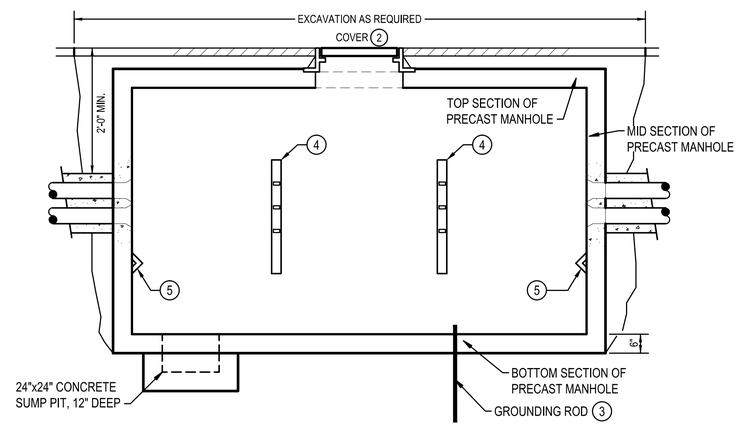

2
E-505 E-505

SECTION
8' x 12' MANHOLE

SCALE: 1/2" = 1'-0"

GENERAL NOTES

1. ALL WORK SHALL BE NEW AND PROVIDED UNDER THIS CONTRACT UNLESS SPECIFICALLY MARKED "EXISTING", "EXIST.", OR "(E)".
2. VERIFY LOCATION AND DIMENSIONS OF EXISTING EQUIPMENT AND COORDINATE ALL WORK PRIOR TO THE START OF CONSTRUCTION.

NOTES

3. PROVIDE 1" STEEL PIPE SLEEVE THROUGH CONCRETE FLOOR TO PERMIT GROUND ROD TO BE DRIVEN. PROVIDE 3/4" x 10' LONG COPPER CLAD STEEL GROUND ROD. DRIVE UNTIL TOP OF GROUND ROD IS 6" ABOVE MANHOLE OR HAND HOLE FLOOR. SEAL WATER TIGHT AROUND GROUND ROD.
4. PROVIDE CABLE RACKS, SUPPORTED BY 36" LONG THERMOPLASTIC, NON-CONDUCTING BOLT INSERTS. PROVIDE SUITABLE PORCELAIN INSULATORS ON RACKS TO SUPPORT ALL CABLES. PROVIDE 2 RACKS EACH SIDE OF HANDHOLE PARALLEL TO MAIN CABLE RUN AND ONE RACK ON EACH SIDE OF HANDHOLE PERPENDICULAR TO CABLE RUN.
5. PROVIDE PULLING IRONS EMBEDED IN MANHOLE WALL OPPOSITE EACH CONDUIT ENTRANCE.

SYM	DESCRIPTION	DATE	APPR.

COMMONWEALTH OF VIRGINIA
SAMUEL J. STATZ
Lic. No. 045162
14 JANUARY 2016
PROFESSIONAL ENGINEER

SUMMER CONSULTANTS INCORPORATED
7900 Westpark Drive | Suite A405 | McLean, VA 22102
(703) 556-8820 | www.summerconsultants.com

APPROVED
FOR COMMANDER NAVFAC
ACTIVITY
SATISFACTORY TO DATE
DES KU DRW EP CH SS/CPC
<<PM/DM>>
BRANCH MANAGER
CHIEF ENGIARCH
<<XXX>>

DEPARTMENT OF THE NAVY
NAVAL FACILITIES ENGINEERING COMMAND
RESIDENT OFFICER IN CHARGE OF CONSTRUCTION
NAVAL FACILITIES ENGINEERING COMMAND - WASHINGTON
MARINE CORPS BASE, QUANTICO, VIRGINIA
MARINE CORPS BASE QUANTICO
QUANTICO, VA

P714 REPAIR OCS ELECTRIC SYSTEM
SUBSTATION, CONDUITS, AND CABLES

MANHOLE DETAILS

SCALE: AS NOTED
EPROJECT NO.: QU1536M
CONSTR. CONTR. NO.
NAVFAC DRAWING NO. 3190009
SHEET 100 OF 105

E-505

DRAWFORM REVISION: 10 MARCH 2009

FILE NAME: E-505 DETAILS.DWG
OUR REF: XXX.XX
PROJECT: XXXXXXXX
PLOT DATE: 1/13/2016 11:37:34 PM

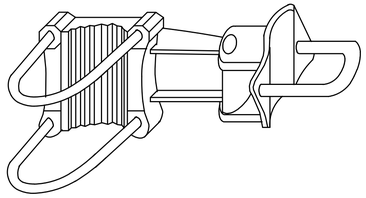

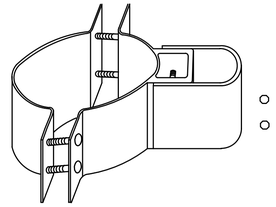

STANDARD HINGE
NOT TO SCALE

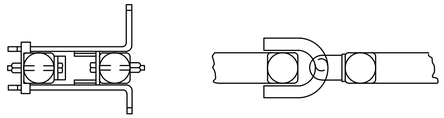

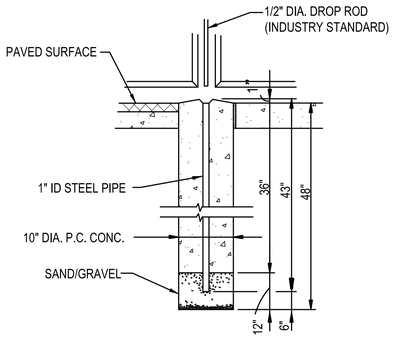

DROP ROD FOUNDATION
NOT TO SCALE

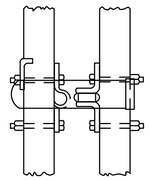

LATCH
ASSEMBLY
NOT TO SCALE

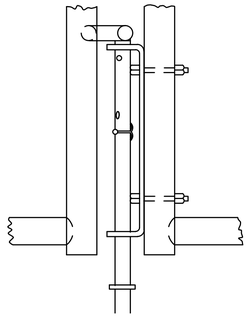

DROP ROD
ASSEMBLY
NOT TO SCALE

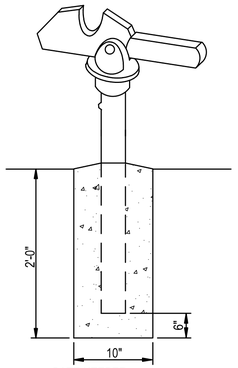

GATE KEEPER
(TO HOLD GATE OPEN)
NOT TO SCALE

DETAIL (2 / ES-401 | E-506)
SWING GATE

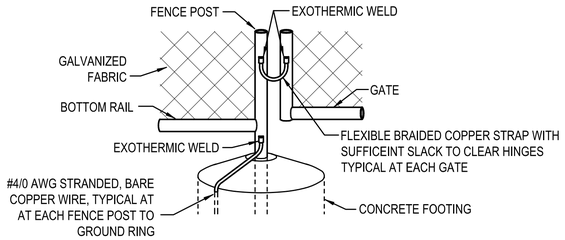

DETAIL (1 / ES-401 | E-506)
FENCE GROUNDING
NOT TO SCALE

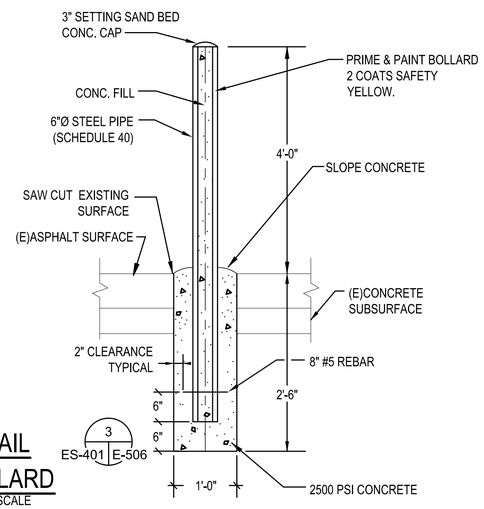

DETAIL (3 / ES-401 | E-506)
BOLLARD
NOT TO SCALE

GENERAL NOTES

1. ALL WORK SHALL BE NEW AND PROVIDED UNDER THIS CONTRACT UNLESS SPECIFICALLY MARKED "EXISTING", "EXIST.", OR "(E)".
2. VERIFY LOCATION AND DIMENSIONS OF EXISTING EQUIPMENT AND COORDINATE ALL WORK PRIOR TO THE START OF CONSTRUCTION.

SYM	DESCRIPTION	DATE	APPR.

NAVFAC

COMMONWEALTH OF VIRGINIA
SAMUEL J. STATZ
Lic. No. 045162
14 JANUARY 2016
PROFESSIONAL ENGINEER

SUMMER CONSULTANTS INCORPORATED
7900 Westpark Drive | Suite A405 | McLean, VA 22102
(703) 556-8820 | www.summerconsultants.com

APPROVED
FOR COMMANDER NAVFAC
ACTIVITY
SATISFACTORY TO DATE
DES KU DRW EP CHK SS/CPC
<<PM/DM>>
BRANCH MANAGER
CHIEF ENG/ARCH
<<XXX>>

DEPARTMENT OF THE NAVY
NAVAL FACILITIES ENGINEERING COMMAND
RESIDENT OFFICER IN CHARGE OF CONSTRUCTION
NAVAL FACILITIES ENGINEERING COMMAND - WASHINGTON
MARINE CORPS BASE, QUANTICO, VIRGINIA
MARINE CORPS BASE QUANTICO
QUANTICO, VA

P714 REPAIR OCS ELECTRIC SYSTEM SUBSTATION, CONDUITS, AND CABLES

FENCE DETAILS

SCALE: AS NOTED
EPROJECT NO.: QU1536M
CONSTR. CONTR. NO.
NAVFAC DRAWING NO.
3190010
SHEET 101 OF 105
E-506

DRAWFORM REVISION: 10 MARCH 2009

FILE NAME: E-506 DETAILS.DWG
OUR REF: XXX.XX
PROJECT: XXXXXXXX
PLOT DATE: 11/13/2016 11:37:36 PM

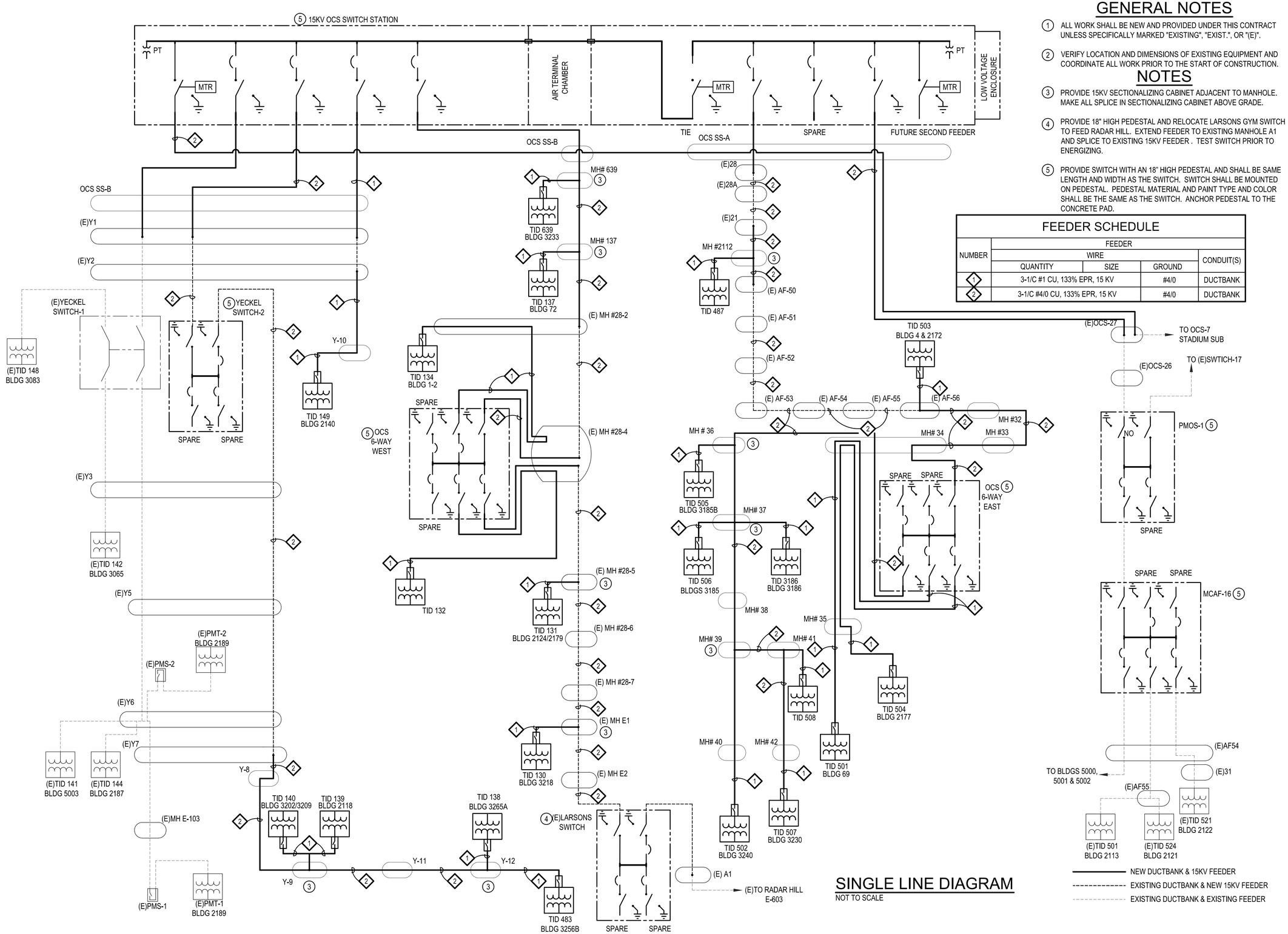

SINGLE LINE DIAGRAM

NOT TO SCALE

GENERAL NOTES

1. ALL WORK SHALL BE NEW AND PROVIDED UNDER THIS CONTRACT UNLESS SPECIFICALLY MARKED "EXISTING", "EXIST.", OR "(E)".
2. VERIFY LOCATION AND DIMENSIONS OF EXISTING EQUIPMENT AND COORDINATE ALL WORK PRIOR TO THE START OF CONSTRUCTION.

NOTES

3. PROVIDE 15KV SECTIONALIZING CABINET ADJACENT TO MANHOLE. MAKE ALL SPLICE IN SECTIONALIZING CABINET ABOVE GRADE.
4. PROVIDE 18" HIGH PEDESTAL AND RELOCATE LARSONS GYM SWITCH TO FEED RADAR HILL. EXTEND FEEDER TO EXISTING MANHOLE A1 AND SPLICE TO EXISTING 15KV FEEDER . TEST SWITCH PRIOR TO ENERGIZING.
5. PROVIDE SWITCH WITH AN 18" HIGH PEDESTAL AND SHALL BE SAME LENGTH AND WIDTH AS THE SWITCH. SWITCH SHALL BE MOUNTED ON PEDESTAL. PEDESTAL MATERIAL AND PAINT TYPE AND COLOR SHALL BE THE SAME AS THE SWITCH. ANCHOR PEDESTAL TO THE CONCRETE PAD.

FEEDER SCHEDULE

NUMBER	FEEDER			CONDUIT(S)
	WIRE			
	QUANTITY	SIZE	GROUND	
1	3-1/C #1 CU, 133% EPR, 15 KV		#4/0	DUCTBANK
2	3-1/C #4/0 CU, 133% EPR, 15 KV		#4/0	DUCTBANK

SYM	DESCRIPTION	DATE	APPR

NAVFAC

COMMONWEALTH OF VIRGINIA
SAMUEL J. STATZ
Lic. No. 045162
14 JANUARY 2016
PROFESSIONAL ENGINEER

SUMMER CONSULTANTS INCORPORATED
7900 Westpark Drive | Suite A405 | McLean, VA 22102
(703) 556-8820 | www.summerconsultants.com

APPROVED

FOR COMMANDER NAVFAC

ACTIVITY

SATISFACTORY TO DATE

DES KU DRW EP CHK SS/CPC

<<PM/DM>>

BRANCH MANAGER

CHIEF ENG/ARCH

<<XX>>

DEPARTMENT OF THE NAVY
NAVAL FACILITIES ENGINEERING COMMAND
RESIDENT OFFICER IN CHARGE OF CONSTRUCTION
NAVAL FACILITIES ENGINEERING COMMAND - WASHINGTON
MARINE CORPS BASE QUANTICO
QUANTICO, VA

P714 REPAIR OCS ELECTRIC SYSTEM SUBSTATION, CONDUITS, AND CABLES

SINGLE LINE DIAGRAM

SCALE: AS NOTED

EPROJECT NO.: QU1536M

CONSTR. CONTR. NO.

NAVFAC DRAWING NO. 3190011

SHEET 102 OF 105

E-601

DRAWFORM REVISION: 10 MARCH 2009

FILE NAME: E-601 SINGLE LINE DIAGRAM.DWG
OUR REF: 141.15
PROJECT: XXXXXXXX
PLOT DATE: 1/13/2016 11:37:39 PM

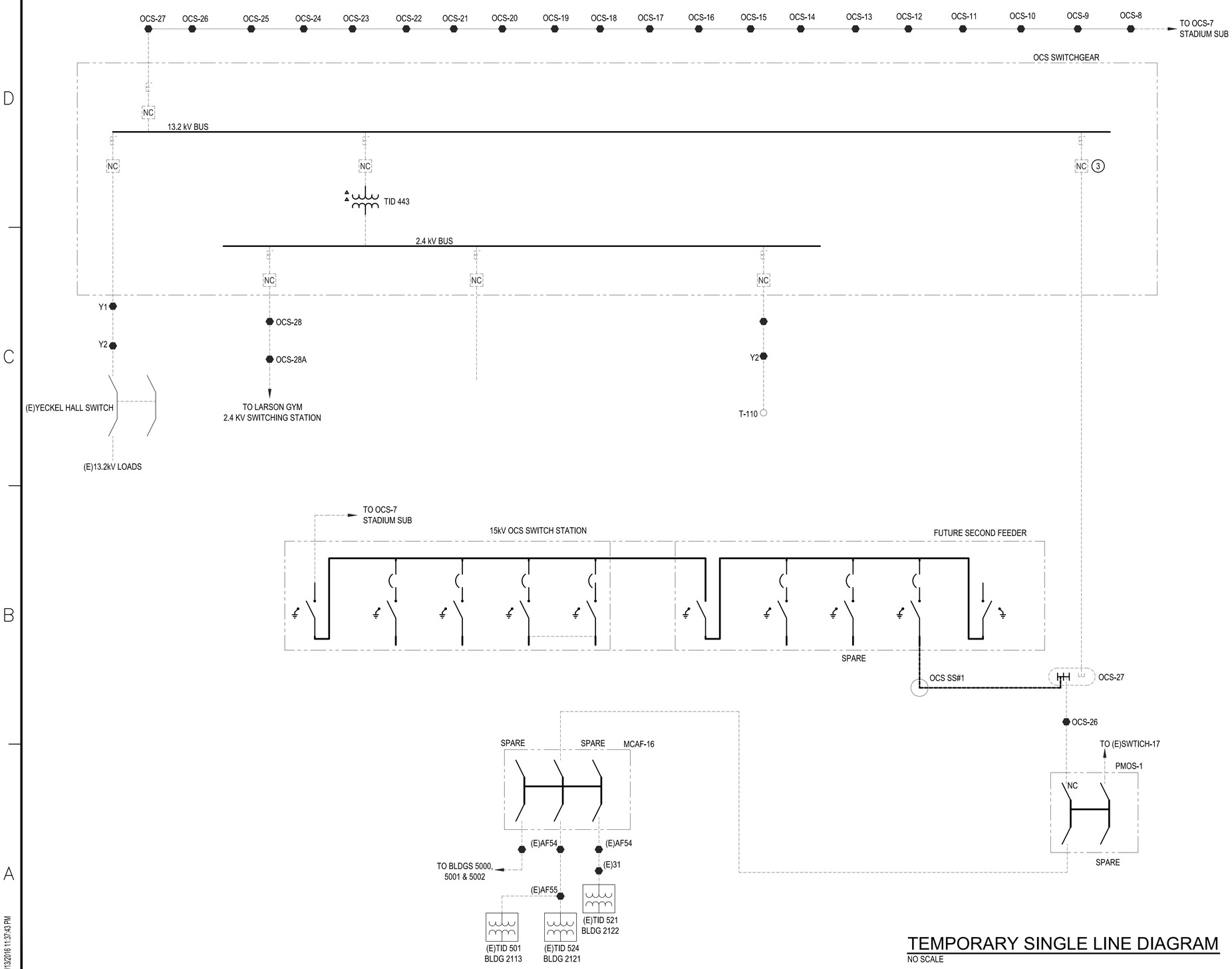

GENERAL NOTES

1. ALL WORK SHALL BE NEW AND PROVIDED UNDER THIS CONTRACT UNLESS SPECIFICALLY MARKED "EXISTING", "EXIST.", OR "(E)".
2. VERIFY LOCATION AND DIMENSIONS OF EXISTING EQUIPMENT AND COORDINATE ALL WORK PRIOR TO THE START OF CONSTRUCTION.

NOTES

3. DURING TEMPORARY PHASE BREAKER SHALL REMAIN OPEN.

- EXISTING WOOD POLE
- NEW MANHOLE
- EXISTING MANHOLE
- NEW DUCTBANK & 15KV FEEDER
- EXISTING DUCTBANK & NEW 15KV FEEDER
- EXISTING DUCTBANK & EXISTING FEEDER
- NEW OVERHEAD FEEDER

TEMPORARY SINGLE LINE DIAGRAM

NO SCALE

SYM	DESCRIPTION	DATE	APPR

NAVFAC

COMMONWEALTH OF VIRGINIA
SAMUEL J. STATZ
Lic. No. 045162
14 JANUARY 2016
PROFESSIONAL ENGINEER

SUMMER CONSULTANTS INCORPORATED
7900 Westpark Drive | Suite A405 | McLean, VA 22102
(703) 556-8820 | www.summerconsultants.com

APPROVED
FOR COMMANDER NAVFAC
ACTIVITY
SATISFACTORY TO DATE
DES KU DRW EP CH SS/CPC
<<PM/DM>>
BRANCH MANAGER
CHIEF ENG/ARCH
<<XX>>

DEPARTMENT OF THE NAVY
NAVAL FACILITIES ENGINEERING COMMAND - WASHINGTON
RESIDENT OFFICER IN CHARGE OF CONSTRUCTION
NAVAL FACILITIES ENGINEERING COMMAND
MARINE CORPS BASE, QUANTICO, VIRGINIA
QUANTICO, VA
MARINE CORPS BASE QUANTICO

P714 REPAIR OCS ELECTRIC SYSTEM SUBSTATION, CONDUITS, AND CABLES

TEMPORARY SINGLE LINE DIAGRAM

SCALE: AS NOTED
EPROJECT NO.: QU1536M
CONSTR. CONTR. NO.
NAVFAC DRAWING NO. 3190012
SHEET 103 OF 105

E-602

DRAWFORM REVISION: 10 MARCH 2009

FILE NAME: E-602 TEMPORARY SINGLE LINE DIAGRAM.DWG
OUR REF: 141.15
PROJECT: QUANTICO OCS SUBSTATION
PLOT DATE: 1/13/2016 11:37:43 PM

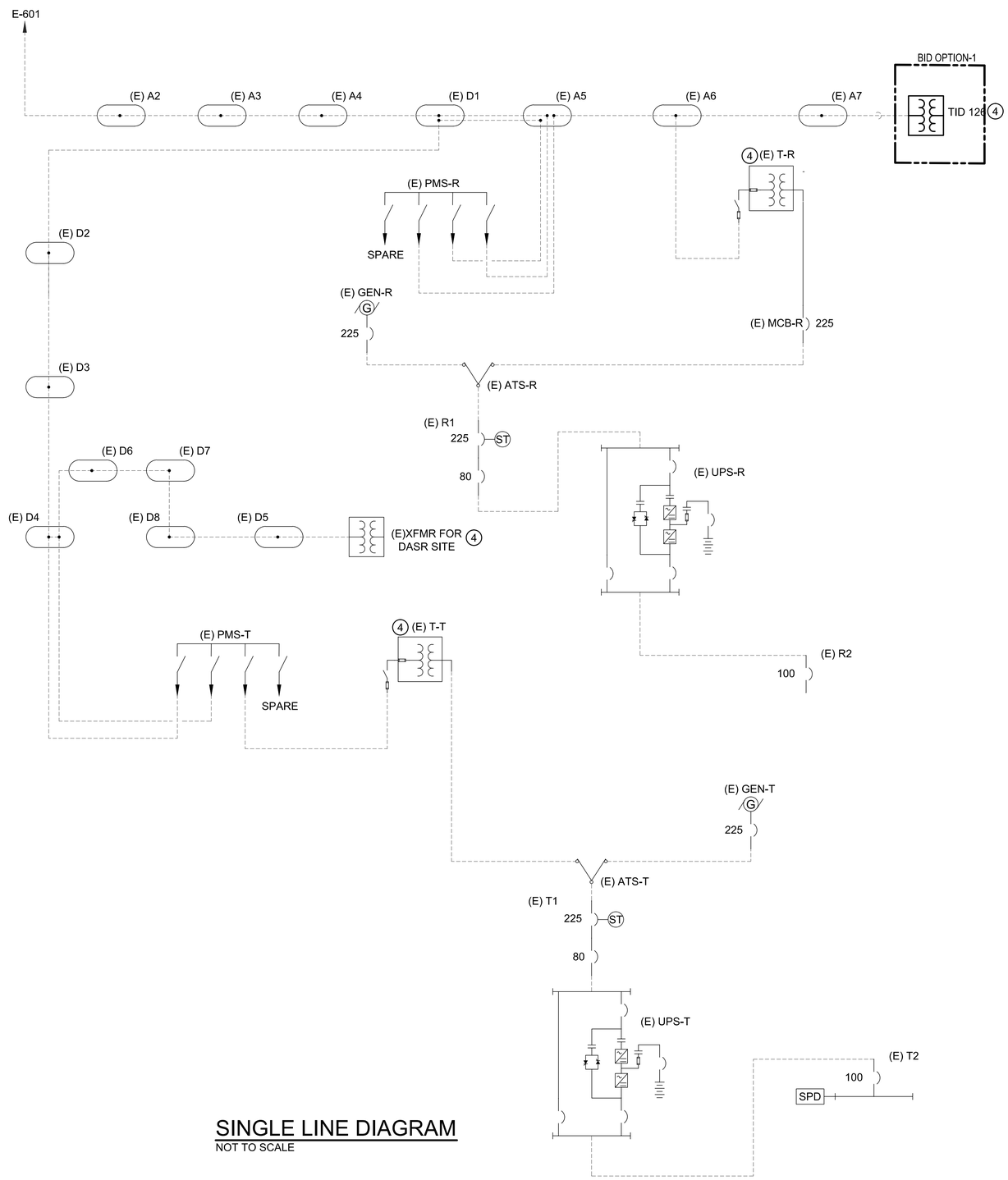

SINGLE LINE DIAGRAM

NOT TO SCALE

GENERAL NOTES

1. ALL WORK SHALL BE NEW AND PROVIDED UNDER THIS CONTRACT UNLESS SPECIFICALLY MARKED "EXISTING", "EXIST.", OR "(E)".
2. VERIFY LOCATION AND DIMENSIONS OF EXISTING EQUIPMENT AND COORDINATE ALL WORK PRIOR TO THE START OF CONSTRUCTION.
3. VERIFY WORK DONE UNDER P-1406, COMPLETED BEFORE CONSTRUCTION.

NOTES

4. WHEN FEEDER IS READY FOR 5KV TO 15KV SWITCHOVER REMOVE FEEDER FROM 5KV BUSHINGS AND CONNECT TO 15KV BUSHINGS. RE-ENERGIZE TRANSFORMER.
5. SPLICE ONTO EXISTING 15KV FEEDER IN EXISTING MANHOLE A1.

SYM	DESCRIPTION	DATE	APPR.

NAVFAC

COMMONWEALTH OF VIRGINIA
SAMUEL J. STATZ
Lic. No. 045162
14 JANUARY 2016
PROFESSIONAL ENGINEER

SUMMER CONSULTANTS INCORPORATED
7900 Westpark Drive | Suite A405 | McLean, VA 22102
(703) 556-8820 | www.summerconsultants.com

APPROVED

FOR COMMANDER NAVFAC

ACTIVITY

SATISFACTORY TO DATE

DES KU DRW EP CHK SS/CPC

<<PM/DM>>

BRANCH MANAGER

CHIEF ENG/ARCH

<<XX>>

DEPARTMENT OF THE NAVY
NAVAL FACILITIES ENGINEERING COMMAND
RESIDENT OFFICER IN CHARGE OF CONSTRUCTION

NAVAL FACILITIES ENGINEERING COMMAND - WASHINGTON
MARINE CORPS BASE, QUANTICO, VIRGINIA

MARINE CORPS BASE QUANTICO
QUANTICO, VA

P714 REPAIR OCS ELECTRIC SYSTEM SUBSTATION, CONDUITS, AND CABLES

SINGLE LINE DIAGRAM

SCALE: AS NOTED

EPROJECT NO.: QU1536M

CONSTR. CONTR. NO.

NAVFAC DRAWING NO.
3190013

SHEET 104 OF 105

E-603

DRAWFORM REVISION: 10 MARCH 2009

NEW DUCTBANK & 15KV FEEDER
EXISTING DUCTBANK & NEW 15KV FEEDER
EXISTING DUCTBANK & EXISTING FEEDER

FILE NAME: E-603 SINGLE LINE DIAGRAM.DWG
OUR REF: XXX.XX
PROJECT: XXXXXXXX
PLOT DATE: 1/13/2016 11:37:46 PM

TRANSFORMER SCHEDULE

TRANSFORMER	KVA	PRIMARY VOLTAGE	PRIMARY BIL	SECONDARY VOLTAGE	SECONDARY BIL	IMPEDANCE @85°C.	BUILDING SERVING	SECONDARY FEEDER	NOTES
TID 130	45	13.2kV	95kV	120/208V Y/Y	30kV	2.3%	3218	4-#3 + 1 # 8 GROUND IN 2" C.	
TID 131	150	13.2kV	95kV	120/208V Y/Y	30kV	5.03%			SEE E-401
TID 132	75	13.2kV	95kV	120/208V Y/Y	30kV	4.5%	3		SEE E-401
TID 133	112.5	480V	10kV	120/208V Y/Y	30kV	1.75%	1-2	4-#4/0 + 1 # 4 GROUND	PROVIDE DRY TYPE INSIDE BUILDING, SEE E-405
TID 134	300	13.2kV	95kV	277/480V Y/Y	30kV	5.1%	1-2	4-#250 + 1 # 1 GROUND	SEE E-405
TID 135	300	13.2kV	95kV	277/480V Y/Y	10kV	1.7%	72	3-#2/0 + 1 # 2 GROUND	SEE E-404
TID 137	112.5	480V	95kV	120/208V Y/Y	30kV	4.2%	72	4-#4/0 + 1 # 4 GROUND	PROVIDE DRY TYPE INSIDE BUILDING,SEE E-404
TID 138	15	13.2kV	95kV	120/208V Y/Y	10kV	5.75%	3256A	4-#3 + 1 # 8 GRD	
TID 139	112.5	13.2kV	95KV	120/208V Y/Y	10kV	5.1%	2118	4-#500KCMIL + 1 #1/0 GRD	SEE E-401
TID 140	112.5	13.2kV	95KV	120/208V Y/Y	30kV	1.9%	3202, 3209	2 SETS OF (4-#4/0 + 1 #2 GRD)	PROVIDE 1 SET TO EACH BUILDING, SEE E-401
(E)TID 141	300	13.2kV	95kV	120/208V Y/Y	-	5.0%	5003		FOR INFORMATION ONLY
(E)TID 142	500	13.2kV	95kV	120/208V Y/Y	30kV	4.2%	3065		FOR INFORMATION ONLY
(E)TID 144	300	13.2kV	95kV	120/208V Y/Y	30kV	5.03%	2187		FOR INFORMATION ONLY
(E)TID 148	500	13.2kV	95kV	120/208V Y/Y	30kV	4.2%	3083		FOR INFORMATION ONLY
TID 149	150	13.2kV	95KV	277/480V Y/Y	30kV	2.36%	5121A	4 # 1/0 + 1 # 6 GROUND	
TID 483	15	13.2kV	95KV	120/208V Y/Y	30kV	2.7%	3256B	4-#3 + 1 # 8 GRD	
TID 487	15	13.2kV	95KV	120/208V Y/Y	30kV	2.36%	ST LTS	4-#3 + 1 # 8 GRD	
TID 501	150	13.2kV	95KV	120/208V Y/Y	30kV	4.40%	69, 2113	4-#4/0 + 1 #2 GRD	SEE E-401
TID 502	225	13.2kV	95KV	120/208V Y/Y	30kV	2.4%	3232, 3240	2 SETS OF (4-500KCMIL + 1 #2/0 GRD)	
TID 503	112.5	13.2kV	95KV	120/208V Y/Y	30kV	3.7%	4	2 SETS OF (4-#3/0 + 1 #1/0 GRD)	
TID 504	150	13.2kV	95KV	120/208V Y/Y	30kV	1.4%	2177	2 SETS OF (4-300KCMIL + 1 #1/0 GRD)	SEE E-401
TID 505	75	13.2kV	95KV	120/208V Y/Y	30kV	2.7%	3185B	4-350KCMIL + 1 # 2 GRD	
TID 506	75	13.2kV	95KV	120/208V Y/Y	30kV	3.02%	3185	4-350KCMIL + 1 # 2 GRD	
TID 507	112.5	13.2kV	95KV	120/208V Y/Y	30kV	2.6%	3230	2 SETS OF (4-#3/0 + 1 #1/0 GRD)	SEE E-401
TID 508	75	13.2kV	95KV	120/208V Y/Y	30kV	3.1%		4-350KCMIL + 1 # 2 GRD	
(E)TID 521	150	13.2kV	95kV	120/208V Y/Y	30kV	5.8%	2122		FOR INFORMATION ONLY
(E)TID 524	500	13.2kV	95kV	120/208V Y/Y	30kV	5.93%	2121		FOR INFORMATION ONLY
TID 639	225	13.2kV	95KV	120/208V Y/Y	30kV	2.6%	3233	2 SETS OF (4-500KCMIL + 1 #2/0 GRD)	
(E)TID PMT-1	75	13.2kV	95kV	120/208V Y/Y	-	-%	2189		FOR INFORMATION ONLY
(E)TID PMT-2	300	13.2kV	95kV	120/208V Y/Y	-	-%	2189		FOR INFORMATION ONLY
(E)TID PMT-M1	1000	13.2kV	95kV	480/277V Y/Y	-	-%	5005		FOR INFORMATION ONLY
TID 3186	45	13.2kV	95KV	120/208V Y/Y	30kV	-%	3186		SEE E-402
(E)TID 522	1150	13.2kV	-	480/277V Y/Y	-	-%	5002		FOR INFORMATION ONLY
(E)TID 523	1000	13.2kV	-	480/277V Y/Y	-	-%	5001		FOR INFORMATION ONLY
TID 126	112.5	13.2kV/5KV	95KV	120/208V Y/Y	-	-%			DUAL PRIMARY

GENERAL NOTES

1. ALL WORK SHALL BE NEW AND PROVIDED UNDER THIS CONTRACT UNLESS SPECIFICALLY MARKED "EXISTING", "EXIST.", OR "(E)".
2. VERIFY LOCATION AND DIMENSIONS OF EXISTING EQUIPMENT AND COORDINATE ALL WORK PRIOR TO THE START OF CONSTRUCTION.

SYM	DESCRIPTION	DATE	APPR.

NAVFAC

COMMONWEALTH OF VIRGINIA
SAMUEL J. STATZ
Lic. No. 045162
14 JANUARY 2016
PROFESSIONAL ENGINEER

SUMMER CONSULTANTS INCORPORATED
7900 Westpark Drive | Suite A405 | McLean, VA 22102
(703) 556-8820 | www.summerconsultants.com

APPROVED
FOR COMMANDER NAVFAC
ACTIVITY
SATISFACTORY TO DATE

DES	DRW	CHK
KU	EP	SS/CPC

<<PM/DM>>
BRANCH MANAGER
CHIEF ENG/ARCH
<<XX>>

DEPARTMENT OF THE NAVY
NAVAL FACILITIES ENGINEERING COMMAND
NAVAL FACILITIES ENGINEERING COMMAND - WASHINGTON
RESIDENT OFFICER IN CHARGE OF CONSTRUCTION
MARINE CORPS BASE, QUANTICO, VIRGINIA
MARINE CORPS BASE QUANTICO
QUANTICO, VA

P714 REPAIR OCS ELECTRIC SYSTEM
SUBSTATION, CONDUITS, AND CABLES

TRANSFORMER SCHEDULE

SCALE: AS NOTED
EPROJECT NO.: QU1536M
CONSTR. CONTR. NO.
NAVFAC DRAWING NO. 3190014
SHEET 105 OF 105

E-701

DRAWFORM REVISION: 10 MARCH 2009

FILE NAME: E-701 TRANSFORMERS SCHEDULE.DWG
OUR REF: 141.15
PROJECT: OCS SUBSTATION
PLOT DATE: 1/13/2016 11:37:49 PM