HANGAR 111
HANGAR DOORS REPLACEMENT

PATUXENT RIVER NAVAL AIR STATION
PATUXENT RIVER, MARYLAND

FINAL SUBMISSION
24 AUGUST 2016

VICINITY MAP

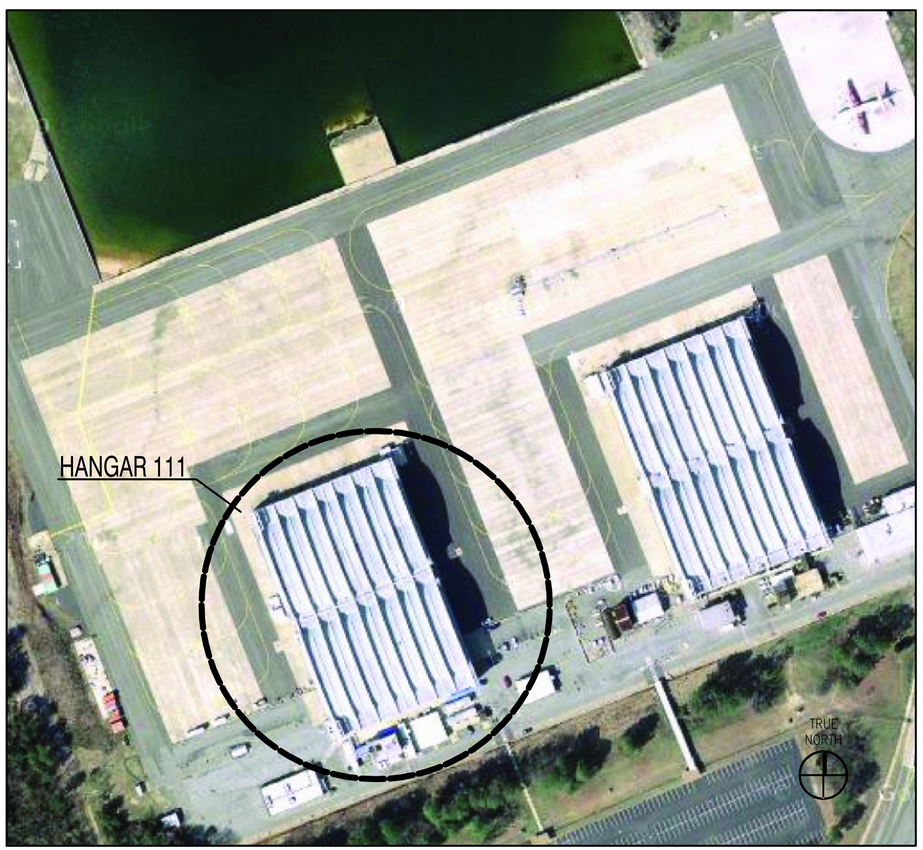

LOCATION MAP

SYM	DESCRIPTION	DATE	APPR

NAVFAC

ARCHITECT 12218 JOHNNIE E. HACKETT STATE OF MARYLAND 8·24·16 SEAL

JACOBS
1100 NORTH GLEBE ROAD SUITE 500
ARLINGTON, VIRGINIA 22201
TEL (571) 218-1000 FAX (571) 218-1600
A/E INFO

APPROVED
FOR COMMANDER NAVFAC
ACTIVITY

SATISFACTORY TO DATE

DES	AG	DRW	YN	CHK	AG

<<PM/DM>> ----
BRANCH MANAGER --
CHIEF ENG/ARCH ---
<<->> --

DEPARTMENT OF THE NAVY
NAVAL FACILITIES ENGINEERING COMMAND
THE NAVY YARD WASHINGTON, D.C.
NAVAL FACILITIES ENGINEERING COMMAND, WASHINGTON
NAVAL AIR STATION – PAX RIVER ST. MARY'S CO., MD.
HANGAR 111-HANGAR DOORS REPLACEMENT
COVER SHEET

SCALE: N/A
EPROJECT NO.: 1323946
CONSTR. CONTR. NO. -
NAVFAC DRAWING NO. 13083167
SHEET 1 OF 35
G-001

DRAWFORM REVISION: 10 MARCH 2009

FILE NAME: C:\pwworking\gbno\nawssyi\d0896250\BLDG111-1323946-G001.dwg LAYOUT NAME: Layout1 PLOTTED: Thursday, August 18, 2016 - 7:41pm USER: nawssyi

INDEX OF DRAWINGS

SHEET NO	DRAWING NO	NAVFAC NO	SHEET TITLE
	GENERAL		
1	G-001	13083167	COVER SHEET
2	G-002	13083168	INDEX OF DRAWINGS & BUILDING CODE ANALYSIS
3	G-003	13083169	SYMBOLS, ABBREVIATIONS AND GENERAL NOTES
4	G-004	13083170	SEQUENCING AND STAGING PLAN
	ARCHITECTURAL		
5	AD-101	13083171	OVERALL DEMOLITION FLOOR PLAN
6	AD-111	13083172	PARTIAL DEMOLITION FLOOR PLANS
7	AD-201	13083173	EXTERIOR ELEVATIONS DEMOLITION
8	AD-601	13083174	ORIGINAL HANGAR DOOR WINDOW CONFIGURATIONS
9	A-101	13083175	OVERALL FLOOR PLAN
10	A-111	13083176	PARTIAL FLOOR PLANS
11	A-112	13083177	PARTIAL FLOOR PLANS
12	A-201	13083178	EXTERIOR ELEVATIONS
13	A-211	13083179	PARTIAL ELEVATION – DOOR SW
14	A-212	13083180	PARTIAL ELEVATION – DOOR NW
15	A-213	13083181	PARTIAL ELEVATION – DOOR SE
16	A-214	13083182	PARTIAL ELEVATION – DOOR NE
17	A-300	13083183	HANGAR DOOR SECTIONS
18	A-501	13083184	HANGAR DOOR DETAILS
19	A-502	13083185	HANGAR DOOR DETAILS
20	A-503	13083186	VERTICAL LIFT DOOR
21	A-601	13083187	WINDOW SCHEDULE AND DETAILS
22	A-603	13083188	DOOR TYPES AND SCHEDULE
	STRUCTURAL		
23	S-001	13083189	STRUCTURAL GENERAL NOTES
24	SD-101	13083190	OVERALL DEMOLITION FLOOR PLAN
25	SD-401	13083191	DEMOLITION SECTIONS & TEMPORARY CURTAIN WALL SECTIONS
26	S-101	13083192	OVERALL NEW WORK FLOOR PLAN
27	S-111	13083193	HANGAR DOOR OVERHANG PLAN
28	S-201	13083194	TYPICAL DOOR TRACK AND SLAB PLANS
29	S-202	13083195	SOUTHEAST DOOR PLANS
30	S-301	13083196	ELEVATIONS
31	S-401	13083197	SECTIONS AND DETAILS
32	S-402	13083198	OVERHANG REPAIR DETAILS
	ELECTRICAL		
33	E-101	13083199	ELECTRICAL OVERALL FLOOR PLAN
34	E-601	13083200	CENTRAL LEAN-TO MODIFIED ONE LINE DIAGRAM
35	E-701	13083201	PANEL SCHEDULES

BUILDING CODE ANALYSIS

1. APPLICABLE CODES & REGULATIONS:
   - INTERNATIONAL BUILDING CODE (IBC) 2012 EDITION
   - NFPA 409 STANDARD ON AIRCRAFT HANGAR, 2016 EDITION
   - UFC 1-200-01 GENERAL BUILDING REQUIREMENTS, 1 JULY 2013, WITH CHANGE 3, 1 AUGUST 2015
   - FC 1-300-09N NAVY AND MARINE CORPS DESIGN PROCEDURES, 01 MAY 2014, WITH CHANGE 2, 21 AUGUST 2015
   - 29 CFR 1910.120 HAZARDOUS WASTE OPERATIONS AND EMERGENCY RESPONSE, 21 DECEMBER 1994
   - 29 CFR 1962.62 LEAD
   - UFC 4-010-1 DOD MINIMUM ANTITERRORISM STANDARDS FOR BUILDINGS, 9 FEBRUARY 2012, WITH CHANGE 1, 1 OCTOBER 2013
   - UFC 4-141-10N 2004-01-16 DESIGN AVIATION OPERATION AND SUPPORT FACILITIES, 16 JANUARY 2004
   - UFC 3-600-01, FIRE PROTECTION ENGINEERING FOR FACILITIES, 26 SEPTEMBER 2006, WITH CHANGE 3, 1 MARCH 2013
   - UFC 04-211-01N AIRCRAFT MAINTENANCE HANGARS: TYPE I, TYPE II, TYPE III, 25 OCTOBER 2004, WITH CHANGE 3, 16 OCTOBER 2009
   - NFPA 101: LIFE SAFETY CODE 2015 EDITION
   - NATIONAL ELECTRICAL CODE (NEC), 2011 EDITION
   - INTERNATIONAL FIRE CODE, 2012 EDITION
2. OCCUPANCY CLASSIFICATION OF EXISTING BUILDINGS:
   - PRIMARY: IBC GROUP S-1
   - SECONDARY: IBC GROUP B
3. CONSTRUCTION TYPE OF EXISTING BUILDINGS:
   - IBC TYPE IIA
4. SEISMIC DESIGN CATEGORY OF EXISTING BUILDINGS:
   - B

SYM	DESCRIPTION	DATE	APPR

NAVFAC

ARCHITECT 12218 JOHNNIE E. HACKETT STATE OF MARYLAND 8·24·16 SEAL

JACOBS
1100 NORTH GLEBE ROAD SUITE 500
ARLINGTON, VIRGINIA 22201
TEL (571) 218-1000 FAX (571) 218-1600
A/E INFO

APPROVED
FOR COMMANDER NAVFAC
ACTIVITY

SATISFACTORY TO DATE

DES	AG	DRW	YN	CHK	AG

<<PM/DM>> ----
BRANCH MANAGER --
CHIEF ENG/ARCH ---
<<->> --

DEPARTMENT OF THE NAVY
NAVAL FACILITIES ENGINEERING COMMAND, WASHINGTON
THE NAVY YARD WASHINGTON, D.C.
NAVAL FACILITIES ENGINEERING COMMAND
NAVAL AIR STATION – PAX RIVER ST. MARY'S CO., MD.
HANGAR 111-HANGAR DOORS REPLACEMENT
INDEX OF DRAWINGS & BUILDING CODE ANALYSIS

SCALE: N/A
EPROJECT NO.: 1323946
CONSTR. CONTR. NO. -
NAVFAC DRAWING NO. 13083168
SHEET 2 OF 35
G-002

DRAWFORM REVISION: 10 MARCH 2009

FILE NAME: C:\pwworking\gbno\nawsyi\d0896250\BLDG111-1323946-G002.dwg LAYOUT NAME: Layout1 PLOTTED: Thursday, August 18, 2016 - 7:42am USER: nawsyi

SYMBOLS

OVERALL PLAN TITLE — PLAN NORTH — VIEW TITLE — SCALE

PLAN/DETAIL/SECTION/ELEVATION TITLE — VIEW TITLE — SCALE — A-000 — A#

DOOR NUMBER — 101

DETAIL BOUNDARY — 0 / A-000

SECTION — 0 / A-000 — DETAIL NO. — SHEET. ON WHICH DETAIL IS SHOWN

EXTERIOR ELEVATION — 0 / A-000

INTERIOR ELEVATION DESIGNATION — A — INTERIOR ELEVATION SYMBOL (N, E, S, W) — 0 / A-000 — DETAIL NO. — SHEET. ON WHICH INTERIOR ELEVATION IS SHOWN

KEYNOTE (NUMBER DESIGNATION) — 0 NEW WORK — 0 DEMO WORK — 0 SPECIALITY WORK

NORTH ARROW — PLAN NORTH — TRUE NORTH INDICATOR

COLUMN LINE GRID DESIGNATION — A — 1

PROPERTY LINES

CENTER LINES

BREAK LINES

OUTLINE OF OBJECT ABOVE

FIRE EXTINGUISHER — FE

FIRE EXTINGUISHER CABINET — FEC

REVISION DESIGNATION — #

PARTITION TYPE SYMBOLS — #

WINDOW SYMBOLS — #

ELEVATION DATUM / BENCH MARK — FLOOR LEVEL — EL. 0'-0"

GRAPHIC SCALE — 8' 4' 0 8' — SCALE: 1/8"= 1'-0"

LEGEND

DEMOLITION

EXISTING TO REMAIN

ABBREVIATIONS

A
- ADJ — ADJACENT
- AFB — AIR FORCE BASE
- AFF — ABOVE FINISHED FLOOR
- AP — ACCESS PANEL
- APC — ACOUSTICAL PANEL CEILING
- APPROX — APPROXIMATE
- ARCH — ARCHITECTURAL
- AT/FP — ANTITERRORISM FORCE PROTECTION

B
- BD — BOARD
- BLDG — BUILDING
- BLK — BLOCK
- BO — BLOCK OPENING
- BOT — BOTTOM

C
- CAP — CAPACITY
- CJ — CONTROL JOINT
- CL — CENTER LINE
- CLR — CLEAR
- CONC — CONCRETE
- CONST — CONSTRUCTION
- CONT — CONTINUOUS
- COR — CONTRACTING OFFICER REPRESENTATIVE
- CTR — CENTER

D
- DEMO — DEMOLISH, DEMOLITION
- DIA — DIAMETER
- DIM — DIMENSION
- DIV — DIVISION
- DN — DOWN
- DWG — DRAWING
- DS — DISTRIBUTION SWITCH

E
- EL — ELEVATION
- EDP — ELECTRICAL DISTRIBUTION PANEL
- ELEC — ELECTRICAL
- EMERG — EMERGENCY
- EQ — EQUAL
- EQUIP — EQUIPMENT
- EX — EXISTING
- EXP — EXPOSED
- EXP JT — EXPANSION JOINT
- EXT — EXTERIOR
- EW — EYE WASHER

F
- FA — FIRE ALARM
- FG — FINISHED GRADE
- FOB — FACE OF BLOCK
- FOD — FOREIGN OBJECT DEBRIES
- FT — FEET
- FURN — FURNISH
- FXT — FIXTURE

G
- GA — GAUGE
- GALV — GALVANIZE
- GC — GENERAL CONTRACTOR
- GEN — GENERAL
- GR — GRADE
- GWB — GYPSUM BOARD

H
- HB — HOSE BIB
- HDWD — HARDWOOD
- HORZ — HORIZONTAL
- HP — HIGH POINT
- HT — HEIGHT
- HVAC — HEATING/VENTILATING/ AIR CONDITIONING

I
- IN — INCH(ES)
- INSUL — INSULATION
- INT — INTERIOR
- INV — INVERT

J
- JAN — JANITOR
- JST — JOIST
- JT — JOINT

K
- KIT — KITCHEN

L
- L — LENGTH
- LB — POUND
- LEV — LEVEL
- LIN — LINEAR (LINEAL)
- LP — LOW POINT
- LTG — LIGHTING
- LVR — LOUVER

M
- MAS — MASONRY
- MAX — MAXIMUM
- MECH — MECHANICAL
- MET — METAL
- MFR — MANUFACTURER
- MIN — MINIMUM/MINUTES
- MISC — MISCELLANEOUS
- MREC — MESH REINFORCED ELASTOMERIC COATING
- MTD — METAL DECK

N
- NAVFAC — NAVAL FACILITIES ENGINEERING COMMAND
- NIC — NOT IN CONTRACT
- NOM — NOMINAL
- NTS — NOT TO SCALE

O
- OC — ON CENTER
- OH — OPPOSITE HAND
- OHW — ORIGINAL HISTORICAL WINDOW
- OPNG — OPENING

P
- P/L — PROPERTY LINE
- PERIM — PERIMETER
- PLBG — PLUMBING
- PLYWD — PLYWOOD
- PNL — PANEL
- PR — PAIR
- PRE — PREFINISHED
- PREFAB — PREFABRICATED
- PROP — PROPERTY
- PS — PANEL SWITCH
- PT — POINT
- PTN — PARTITION

Q
- QTY — QUANTITY

R
- R — RISER
- RAD — RADIUS
- RD — ROOF DRAIN
- REBAR — REINFORCING BAR
- REF — REFERENCE
- REINF — REINFORCE
- REP — REPRESENTATIVE
- REQD — REQUIRED
- REV — REVISION (REVISED)
- RM — ROOM
- RO — ROUGH OPENING

S
- SCHED — SCHEDULE
- SEC — SECTION
- SF or S.F. — SQUARE FOOT
- SHPO — STATE HISTORICAL PRESERVATION OFFICE
- SIM — SIMILAR
- SPEC — SPECIFICATIONS
- SQ — SQUARE
- SS — STAINLESS STEEL
- STD — STANDARD
- STL — STEEL
- STOR — STORAGE
- STRUCT — STRUCTURAL

T
- TBD — TO BE DETERMINED
- TEMP — TEMPERATURE
- THK — THICK
- TO. — TOP OF
- TP. — TYP TYPICAL

U
- UNF — UNFINISHED
- UON — UNLESS OTHERWISE NOTED
- UTIL — UTILITY

V
- V — VENT
- VAR — VARIABLE, VARIES
- VB — VAPOR BARRIER
- VERT — VERTICAL
- VIF — VERIFY IN FIELD
- VTR — VENT TO ROOF

W
- W/ — WITH
- WC — WATER COOLER
- WD — WOOD
- WP — WATERPROOF
- WS — –
- WT — WEIGHT

Y
- YD — YARD

GENERAL NOTES

HAZMAT NOTES

1. LEAD BASED PAINT (LBP) WAS FOUND. LBP SHALL BE ABATED IN ACCORDANCE WITH FEDERAL, STATE AND LOCAL REGULATIONS DURING RENOVATION REFER TO REPORT BY GLOBAL CONSULTING, INC. "REVISED HAZARDOUS MATERIAL INSPECTION REPORT AND ABATEMENT SPECIFICATION" DATED APRIL 26TH, 2016 THAT CONTAINS HAZARDOUS MATERIALS INCLUDING LEAD BASED PAINTS, AND ASBESTOS CONTAINING MATERIALS (ACM), AND OTHER POTENTIAL HAZARDOUS MATERIALS. THE REPORT ALSO INCLUDES ABATEMENT SPECIFICATIONS, AND THE QUALITY OF BUILDING COMPONENTS THAT HAVE BEEN IDENTIFIED AS HAVING ACM AND LBP.
2. COATINGS ARE LEAD-BASED PAINT UNLESS TESTED AND PROVEN OTHERWISE. REFER TO SPECIFICATION SECTION 02 82 33.13 20 "REMOVAL/CONTROL AND DISPOSAL OF PAINT WITH LEAD" AND 29 CFR 1926.62 LEAD FOR HAZMAT ABATEMENT SCOPE OF WORK AND WORK PRACTICES.

DEMOLITION WORK

1. DEMOLITION WORK NECESSARY TO PERFORM THE WORK SHALL BE CONSIDERED WITHIN THE SCOPE OF THIS CONTRACT. IN GENERAL, ITEMS TO BE DEMOLISHED OR REMOVED ARE INDICATED ON THE DETAIL BY MEANS OF DASHED LINES (SEE LEGEND).
2. THE REMEDIATION AND REPLACEMENT OF HANGAR DOORS SHALL BE FOUR SEPARATE SEQUENCES IN ORDER OF SW, NW, SE AND NE HANGAR DOORS. EACH HANGAR DOOR WORK SHALL BE FULLY COMPLETED BEFORE STARTING THE NEXT SEQUENCE OF REMEDIATION / REPLACEMENT.
3. REFER TO SPECIFICATION DIVISION 01, 02 AND DRAWINGS FOR SCOPE OF EXISTING/ DEMOLITION WORK.
4. PROTECT AND PRESERVE EXISTING ITEMS TO REMAIN, REPAIR AND/OR REPLACE ITEMS DAMAGED DURING THE COURSE OF WORK TO THE SATISFACTION AND APPROVAL OF THE COR WITHOUT ADDITIONAL COST TO THE GOVERNMENT.
5. RECYCLE STRUCTURAL STEEL FRAMING AND METAL CLADDING FROM EACH DOOR REMOVED.

REFER TO THE CONTRACT SOLICITATION FOR PRICE REDUCTION BASED ON REVENUE FROM SALE OF SCRAP METALS.

NEW WORK

1. DO NOT SCALE DRAWINGS. USE FIGURED DIMENSIONS ONLY. VERIFY DIMENSIONS PRIOR TO START OF WORK. IN THE EVENT OF DISCREPANCY, NOTIFY THE COR AND GET RESOLUTION BEFORE PROCEEDING.
2. NOTIFY THE COR IN WRITING OF ANY DISCREPANCIES BETWEEN EXISTING CONDITIONS AND THE CONTRACT DOCUMENTS BEFORE PROCEEDING WITH THAT PORTION OF THE WORK. FAILURE TO NOTIFY THE COR WILL NOT RELIEVE THE CONTRACTOR OF RESPONSIBILITY TO PERFORM THE WORK INTENDED BY THE CONTRACT DOCUMENTS. CONTRACTOR SHALL BE RESPONSIBLE FOR WORK ARISING FROM SUCH FAILURE TO COORDINATE DISCREPANCIES TO THE SATISFACTION OF THE COR.
3. AT EXISTING SURFACES OR FINISHES TO REMAIN, WHERE DISTURBED BY THE WORK, PATCH OR RESTORE THE FINISHES TO MINIMIZE THE APPARENT CONTRAST BETWEEN NEW AND EXISTING SURFACES. LEVEL AND/OR PREPARE EXISTING SURFACES FOR APPLICATION OF SCHEDULED NEW FINISHES. AT DISTURBED EXISTING FINISHES TO REMAIN, RESTORE DISTURBED AREAS TO MATCH EXISTING.
4. VERIFY EXISTING DIMENSIONS, CONDITIONS, AND CLEARANCES PRIOR TO PROVIDING SUBMITTALS.
5. PROVIDE BLOCKING AND ANCHORAGE FOR INSTALLATION OF THE NEW WORK.
6. ADDITIONAL PLAN INFORMATION IS SHOWN ON LARGE SCALE PLANS. FOR AREAS INDICATED, LARGE SCALE DRAWINGS TAKE PRECEDENCE OVER SMALLER SCALE DRAWINGS.
7. DELUGE SYSTEM & OPEN FLAME WARNING NOTE: PRECAUTIONS SHALL BE TAKEN DURING CONSTRUCTION TO PREVENT ACTIVATION OF OPTICAL FLAME DETECTORS.
8. HANGAR DOOR SHALL HAVE THE CAPACITY TO BE OPERATED MANUALLY IN CASE OF POWER LOSS OR SHUT OFF.

SYM	DESCRIPTION	DATE	APPR

NAVFAC

ARCHITECT 12218 JOHNNIE E. HACKETT STATE OF MARYLAND 8·24·16 SEAL

JACOBS
1100 NORTH GLEBE ROAD SUITE 500
ARLINGTON, VIRGINIA 22201
TEL (571) 218-1000 FAX (571) 218-1600

A/E INFO

APPROVED

FOR COMMANDER NAVFAC

ACTIVITY

SATISFACTORY TO DATE

DES	AG	DRW	YN	CHK	AG

<<PM/DM>> ----
BRANCH MANAGER --
CHIEF ENG/ARCH ---
<<->> --

DEPARTMENT OF THE NAVY
NAVAL FACILITIES ENGINEERING COMMAND
THE NAVY YARD
NAVAL FACILITIES ENGINEERING COMMAND
WASHINGTON, D.C.
NAVAL AIR STATION – PAX RIVER
ST. MARY'S CO., MD.
HANGAR 111-HANGAR DOORS REPLACEMENT
SYMBOLS, ABBREVIATIONS AND GENERAL NOTES

SCALE: AS SHOWN
EPROJECT NO.: 1323946
CONSTR. CONTR. NO. -
NAVFAC DRAWING NO. 13083169
SHEET 3 OF 35
G-003

DRAWFORM REVISION: 10 MARCH 2009

FILE NAME: C:\pwworking\gbno\\nawsyi\d0896250\BLDG111-1323946-G003.dwg LAYOUT NAME: Layout1 PLOTTED: Thursday, August 18, 2016 - 7:42am USER: nawsyi

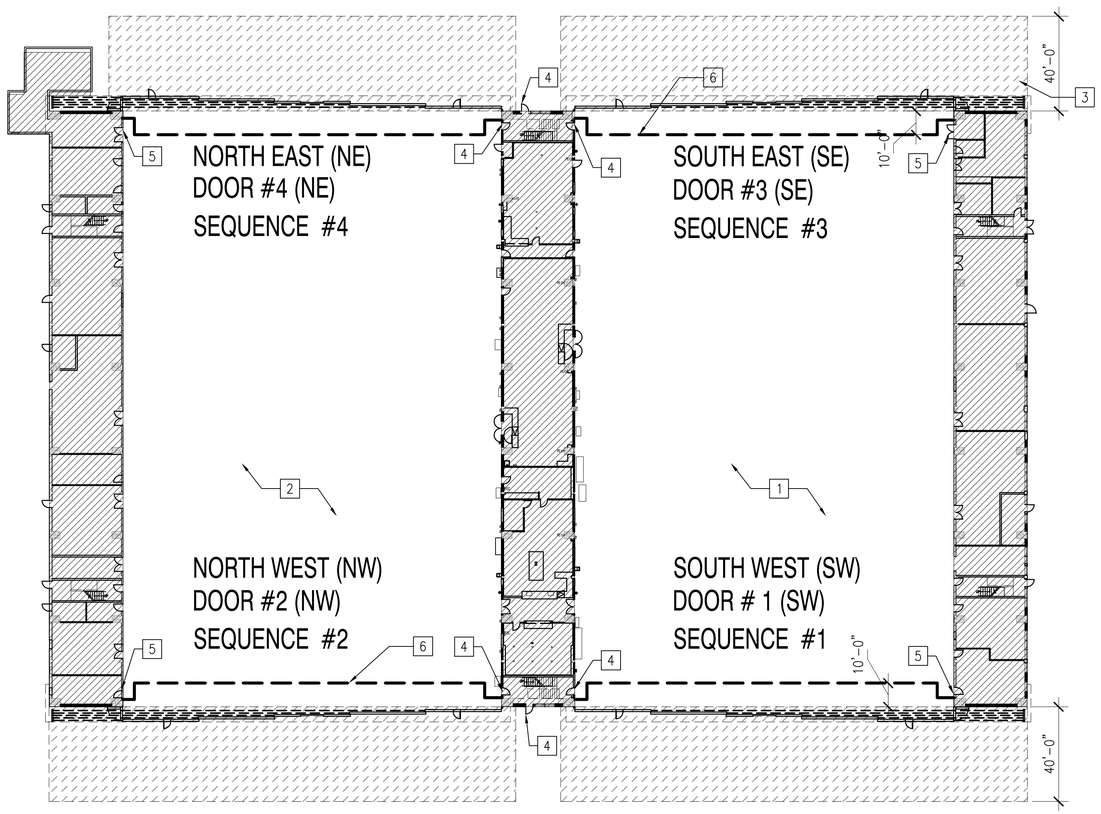

PLAN NORTH

OVERALL FLOOR PLAN-SEQUENCING AND STAGING PLAN

SCALE: 1/32" = 1'-0"

32' 16' 0 32'

SCALE: 1/32"= 1'-0"

GENERAL NOTES

1. ENSURE BUILDING UTILITIES REMAIN OPERATIONAL DURING CONSTRUCTION. COORDINATE OUTAGES WITH COR IN ADVANCE, TO OBTAIN APPROVAL.
2. CONTRACTOR SHALL NOT COMMENCE WORK WITH FOLLOWING SEQUENCE UNTIL THE ACTIVE SEQUENCE IS COMPLETED AND APPROVED.
3. CONTRACTOR TO USE WORK AREA FOR LAY-DOWN DURING EACH PHASE. ENSURE PROPER EGRESS IS MAINTAINED AT ALL TIMES.
4. COORDINATE EXTENT OF WORK AREA FOR HANGAR DOOR WITH COR.
5. PROVIDE TEMPORARY OVER HEAD PROTECTION FOR EGRESS ACCESS AND ACCESS PATH.

KEY NOTES

1. HANGAR ROADSIDE (NIC)
2. HANGAR WATERSIDE (NIC)
3. THIS LAY-DOWN AREA SHOWS THE GENERAL APPROXIMATE AREA OF CONSTRUCTION OPERATIONS AND EXTENT OF WORK. CONTRACTOR SHALL DEVELOP DETAILED LAY-DOWN AREA FOR COR APPROVAL.
4. EGRESS DOOR-MAINTAIN EGRESS ACCESS AT ALL TIMES.
5. ACCESS DOOR-MAINTAIN ACCESS AT ALL TIMES.
6. PROTECT EXISTING TRENCH DURING CONSTRUCTION.

LEGEND

STAGING AREA

NOT IN CONTRACT (NIC)

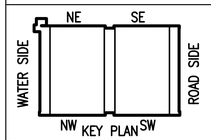

KEY PLAN

PLAN NORTH

SYM	DESCRIPTION	DATE	APPR

NAVFAC

ARCHITECT 12218 JOHNNIE E. HACKETT STATE OF MARYLAND 8·24·16 SEAL

JACOBS
1100 NORTH GLEBE ROAD SUITE 500
ARLINGTON, VIRGINIA 22201
TEL (571) 218-1000 FAX (571) 218-1600

A/E INFO

APPROVED

FOR COMMANDER NAVFAC

ACTIVITY

SATISFACTORY TO DATE

DES	AG	DRW	YN	CHK	AG

<CPM/DM>> ----

BRANCH MANAGER --

CHIEF ENG/ARCH ---

<<-->> --

DEPARTMENT OF THE NAVY
NAVAL FACILITIES ENGINEERING COMMAND
THE NAVY YARD WASHINGTON, D.C.

NAVAL FACILITIES ENGINEERING COMMAND, WASHINGTON
WASHINGTON, D.C.

NAVAL AIR STATION – PAX RIVER
ST. MARY'S CO., MD.

HANGAR 111-HANGAR DOORS REPLACEMENT

SEQUENCING AND STAGING PLAN

SCALE: 1/32" = 1'-0"

EPROJECT NO.: 1323946

CONSTR. CONTR. NO. –

NAVFAC DRAWING NO. 13083170

SHEET 4 OF 35

G-004

DRAWFORM REVISION: 10 MARCH 2009

FILE NAME: C:\pwworking\pbn\rawsay\d0896250\BLDG111-1323946-G004.dwg LAYOUT NAME: Layout1 PLOTTED: Thursday, August 18, 2016 - 7:42pm USER: rawsay

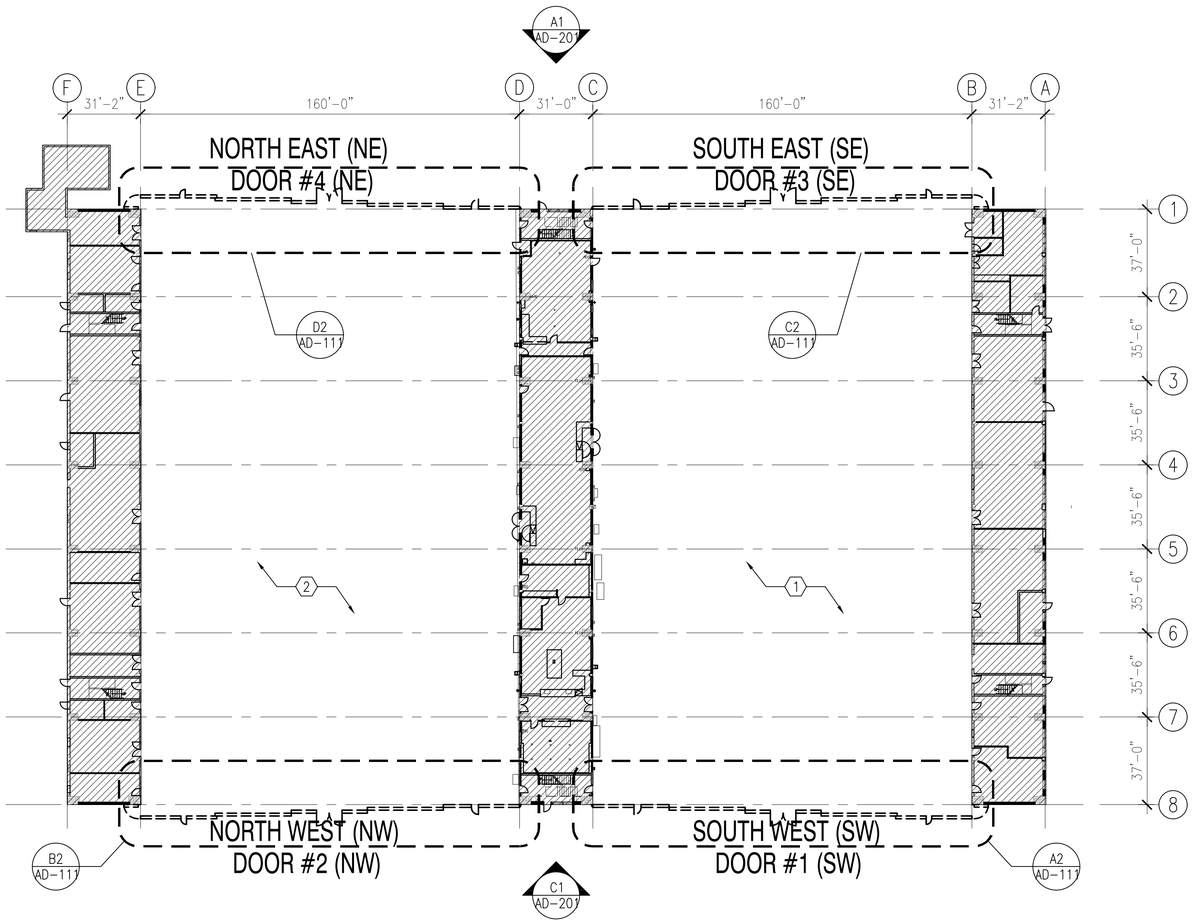

PLAN NORTH

OVERALL DEMOLITION FLOOR PLAN

SCALE: 1/32" = 1'-0"

COORDINATE WITH COR (OCCUPANTS) REGARDING FOD AND DUST BARRIER TO PROTECT AIRCRAFT. THE OCCUPANT WILL REMAIN IN HANGAR 111 CONTINUING TO MAINTAIN AND TEST AIRCRAFT DURING THE RENOVATIONS. PROVISIONS SHALL BE MADE TO PROTECT THE AIRCRAFT FROM DEBRIS AND DUST DURING THE DEMOLITION / RENOVATION AND CONSTRUCTION OF HANGAR DOORS.

GENERAL CONTRACTOR SHALL DEVELOP A HAZMAT ABATEMENT PLAN FOR NAVFAC'S REVIEW AND APPROVAL BEFORE THE DEMOLITION WORK CAN BE IMPLEMENTED

32' 16' 0 32'

SCALE: 1/32"= 1'-0"

GENERAL DEMOLITION NOTES

1. DEMOLITION TO PERFORM THE WORK SHALL BE CONSIDERED WITHIN SCOPE OF THIS CONTRACT. IN GENERAL, ITEMS TO BE DEMOLISHED OR REMOVED ARE INDICATED ON THE DRAWINGS BY MEANS OF DASHED LINES. REFER TO SPECIFICATION SECTION 024100 FOR DEMOLITION.
2. DEMOLITION WORK SHALL BE PERFORMED THAT CUTTING AND PATCHING RESULTS SHALL HAVE AN UNIFORM APPEARANCE.
3. DURING THE PROCESS OF DEMOLITION, PROTECT EXISTING STRUCTURE.
4. GENERAL CONTRACTOR SHALL COMPLY WITH SPECIFICATION AND GLOBAL CONSULTING, INC. "REVISED HAZARDOUS MATERIAL INSPECTION REPORT AND ABATEMENT SPECIFICATION" DATED MARCH 18TH, 2016 FOR HAZARDOUS MATERIAL ABATEMENT (LEAD PAINT, ASBESTOS, ...).
5. REFER TO DRAWING G-003 FOR ADDITIONAL DEMOLITION NOTES.

KEY NOTES

1. HANGAR ROADSIDE – NIC
2. HANGAR WATERSIDE – NIC

LEGEND

NOT IN CONTRACT (NIC)

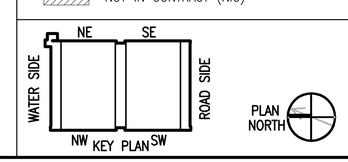

KEY PLAN

PLAN NORTH

SYM	DESCRIPTION	DATE	APPR

NAVFAC

ARCHITECT 12218 JOHNNIE E. HACKETT STATE OF MARYLAND 8·24·16 SEAL

JACOBS
1100 NORTH GLEBE ROAD SUITE 500
ARLINGTON, VIRGINIA 22201
TEL (571) 218-1000 FAX (571) 218-1600
A/E INFO.

APPROVED
FOR COMMANDER NAVFAC
ACTIVITY

SATISFACTORY TO DATE
DES AG DRW YN CHK AG
<<PM/DM>> ----
BRANCH MANAGER --
CHIEF ENG/ARCH ---
<<-->> --

DEPARTMENT OF THE NAVY
NAVAL FACILITIES ENGINEERING COMMAND
THE NAVY YARD WASHINGTON, D.C.
NAVAL FACILITIES ENGINEERING COMMAND, WASHINGTON
NAVAL AIR STATION – PAX RIVER ST. MARY'S CO., MD.
HANGAR 111-HANGAR DOORS REPLACEMENT
OVERALL DEMOLITION FLOOR PLAN

SCALE: 1/32" = 1'-0"
EPROJECT NO.: 1323946
CONSTR. CONTR. NO. –
NAVFAC DRAWING NO. 13083171
SHEET 5 OF 35
AD-101
DRAWFORM REVISION: 10 MARCH 2009

FILE NAME: C:\pwworking\cbna\nawesyi\d0896254\BUG111-1323946-AD101.dwg LAYOUT NAME: Layout1 PLOTTED: Thursday, August 18, 2016 - 6:56pm USER: nawesyi

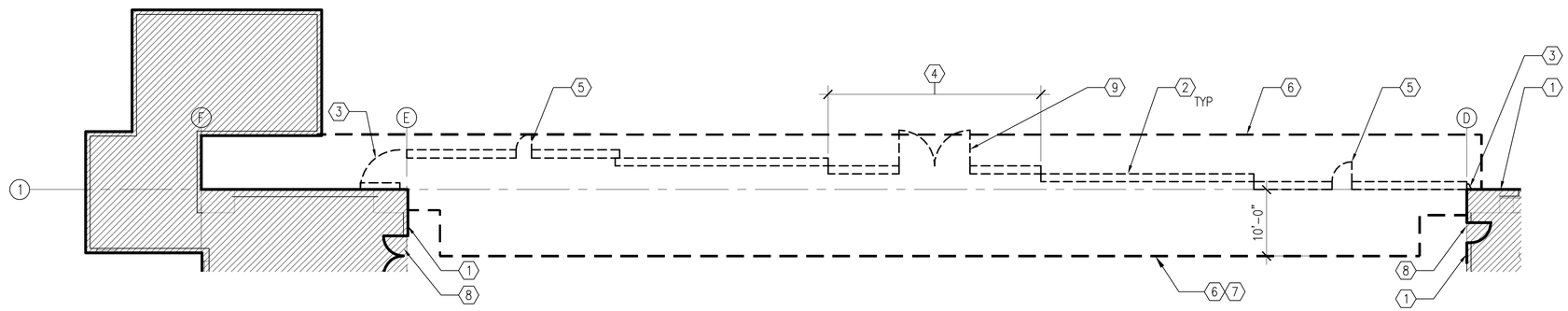

PARTIAL DEMOLITION FLOOR PLAN - DOOR #4 (NE)

SCALE: 3/32" = 1'-0" AD-111 D2

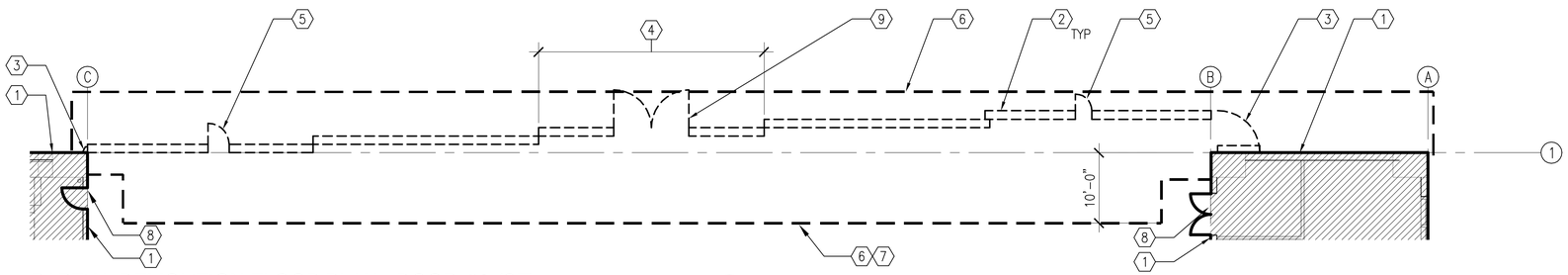

PARTIAL DEMOLITION FLOOR PLAN - DOOR #3 (SE)

SCALE: 3/32" = 1'-0" AD-111 C2

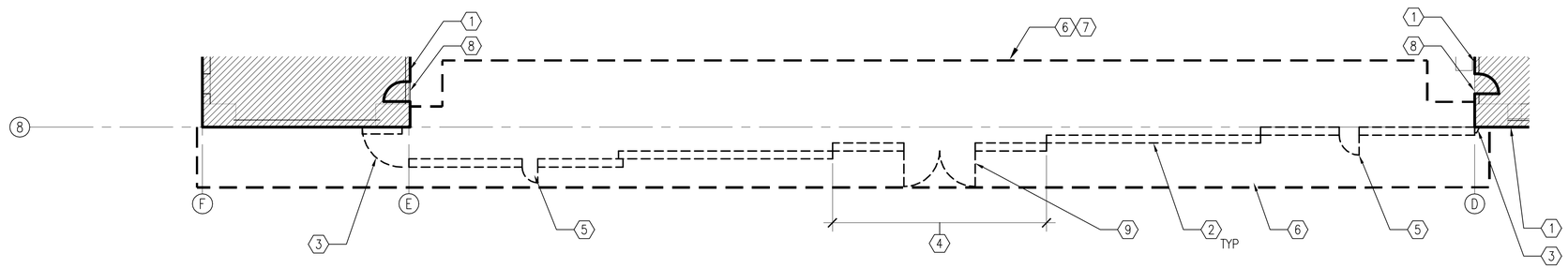

PARTIAL DEMOLITION FLOOR PLAN - DOOR #2 (NW)

SCALE: 3/32" = 1'-0" AD-111 B2

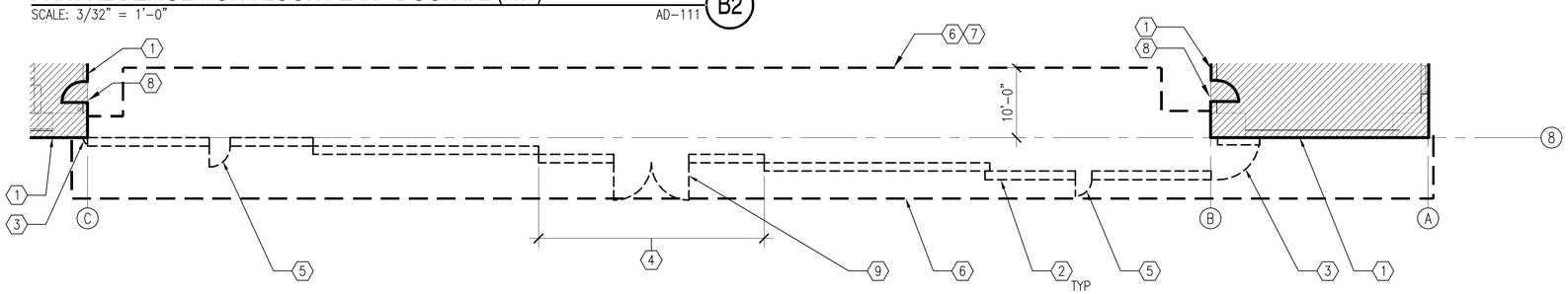

PARTIAL DEMOLITION FLOOR PLAN - DOOR #1 (SW)

SCALE: 3/32" = 1'-0" AD-111 A2

PLAN NORTH

10' 0 10' 20' 30'

SCALE: 3/32" = 1'-0"

GENERAL DEMOLITION NOTES

1. REFER TO DRAWING AD-101 FOR GENERAL DEMOLITION NOTES.
2. REFINISH SURFACES AFFECTED BY THE WORK TO MATCH EXISTING AND MAKE SURFACES READY FOR NEW HANGAR DOOR.

KEY NOTES

1. EXISTING STRUCTURE TO REMAIN AND TO BE PROTECTED.
2. REMOVE EXISTING HANGAR DOOR ASSEMBLY
3. REMOVE HANGAR DOOR EDGE CLOSURE
4. TYPICAL EXISTING HANGAR DOOR MODULE (32'WX40'H) VIF
5. REMOVE EGRESS DOOR PART OF HANGAR DOOR
6. EXTENT OF WORK
7. FOD / DUST BARRIER TEMPORARY PARTITION
8. EXISTING DOOR TO REMAIN ACCESSIBLE DURING CONSTRUCTION
9. REMOVE EXISTING DOOR / VERTICAL LIFT DOOR PART OF HANGAR DOOR

LEGEND

EXISTING TO BE DEMOLISHED/REMOVED.

NOT IN CONTRACT (NIC)

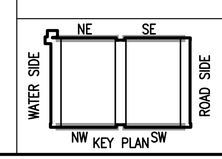

KEY PLAN

PLAN NORTH

SYM	DESCRIPTION	DATE	APPR

NAVFAC

ARCHITECT 12218 JOHNNIE E. HACKETT STATE OF MARYLAND 8·24·16 SEAL

JACOBS
1100 NORTH GLEBE ROAD SUITE 500
ARLINGTON, VIRGINIA 22201
TEL (571) 218-1000 FAX (571) 218-1600

A/E INFO

APPROVED

FOR COMMANDER NAVFAC

ACTIVITY

SATISFACTORY TO DATE

DES	AG	DRW	YN	CHK	AG

<<PM/DM>> ----

BRANCH MANAGER --

CHIEF ENG/ARCH ---

<<--->> --

DEPARTMENT OF THE NAVY
NAVAL FACILITIES ENGINEERING COMMAND
THE NAVY YARD WASHINGTON, D.C.

NAVAL FACILITIES ENGINEERING COMMAND, WASHINGTON

NAVAL AIR STATION – PAX RIVER ST. MARY'S CO., MD.

HANGAR 111-HANGAR DOORS REPLACEMENT

PARTIAL DEMOLITION FLOOR PLANS

SCALE: 3/32" = 1'-0"

EPROJECT NO. 1323946

CONSTR. CONTR. NO. –

NAVFAC DRAWING NO. 13083172

SHEET 6 OF 35

AD-111

DRAWFORM REVISION: 10 MARCH 2009

FILE NAME: C:\pwworking\jbrad\nawasyi\d0896254\BLDG111-1323946-AD111.dwg LAYOUT NAME: Layout1 PLOTTED: Thursday, August 18, 2016 - 6:56pm USER: nawasyi

GENERAL DEMOLITION NOTES

1. REFER TO DRAWING AD-101 FOR GENERAL DEMOLITION NOTES.
2. REFINISH SURFACES AFFECTED BY THE WORK TO MATCH EXISTING AND MAKE ALL SURFACES READY FOR NEW HANGAR DOOR.
3. DIMENSIONS AND ELEVATIONS SHALL BE VERIFIED IN FIELD.

KEY NOTES

1. EXISTING CONCRETE CANTILEVER TO REMAIN AND TO BE PROTECTED. PATCH, REPAIR AND PAINT TO MATCH ADJACENT SURFACES.
2. REMOVE EXISTING HANGAR DOOR ASSEMBLY
3. REMOVE EXISTING TOP HANGAR DOOR TRACK SYSTEM
4. EXISTING EXTERIOR WALLS AND WINDOWS TO REMAIN AND TO BE PROTECTED
5. EXISTING EXTERIOR LIGHTS TO REMAIN AND TO BE PROTECTED
6. REMOVE EXISTING EGRESS / ACCESS DOOR PART OF HANGAR DOOR
7. REMOVE EXISTING DOOR / VERTICAL LIFT DOOR PART OF HANGAR DOOR
8. REMOVE EXISTING RIBBON WINDOW TYPE 1 PART OF HANGAR DOOR, REFER TO DRAWING AD-601 FOR ADDITIONAL INFORMATION
9. REMOVE EXISTING RIBBON WINDOW TYPE 2 PART OF HANGAR DOOR, REFER TO DRAWING AD-601 FOR ADDITIONAL INFORMATION

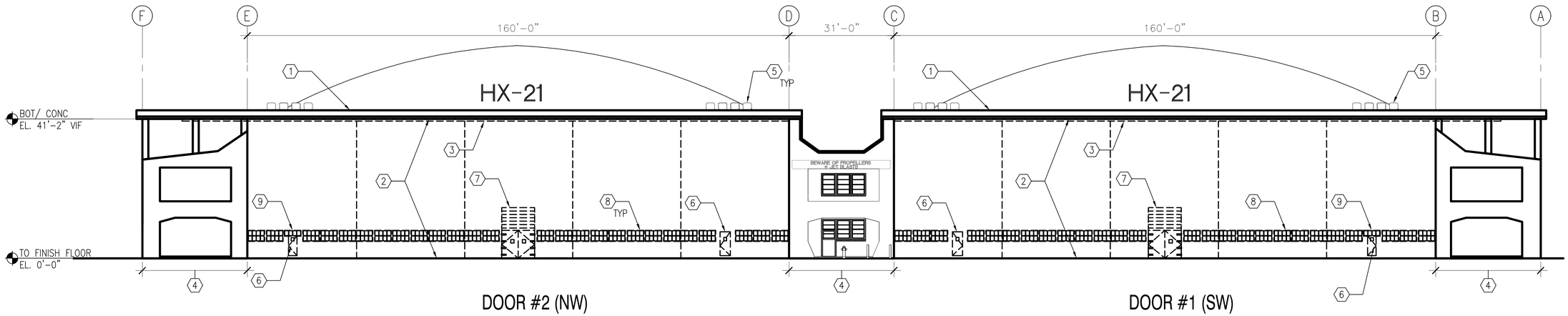

EXTERIOR ELEVATION DEMOLITION- WEST
1/16" = 1'-0" AD-201 C1

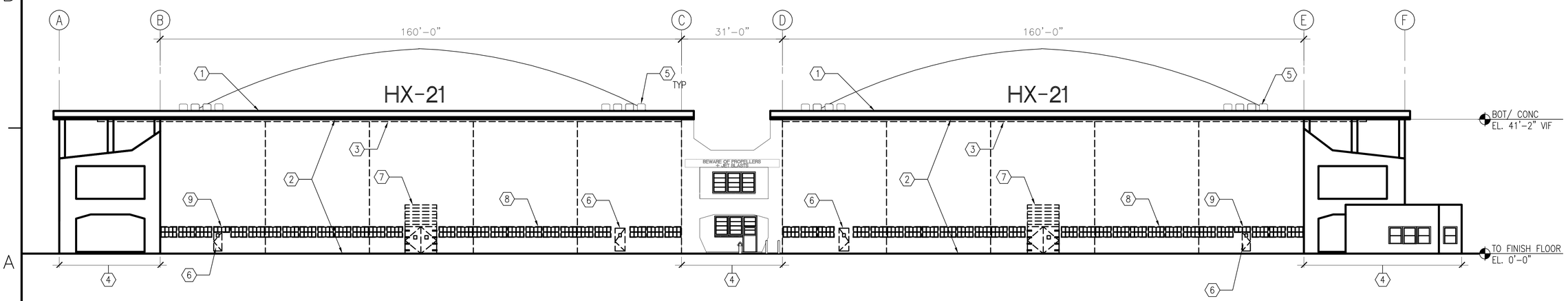

EXTERIOR ELEVATION DEMOLITION- EAST
1/16" = 1'-0" AD-201 A1

16' 8' 0 16'
SCALE: 1/16"= 1'-0"

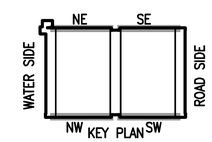

KEY PLAN

								APPR
								DATE
								DESCRIPTION
								SYM

NAVFAC

ARCHITECT 12218 JOHNNIE E. HACKETT STATE OF MARYLAND 8·24·16 SEAL

JACOBS
1100 NORTH GLEBE ROAD SUITE 500
ARLINGTON, VIRGINIA 22201
TEL (571) 210-1000 FAX (571) 210-1600

A/E INFO

APPROVED

FOR COMMANDER NAVFAC

ACTIVITY

SATISFACTORY TO DATE

DES	AG	DRW	YN	CHK	AG
<<PM/DM>>			----		
BRANCH MANAGER			--		
CHIEF ENG/ARCH			---		
<<-->>			--		

DEPARTMENT OF THE NAVY
NAVAL FACILITIES ENGINEERING COMMAND
WASHINGTON, D.C.
NAVAL FACILITIES ENGINEERING COMMAND, WASHINGTON
THE NAVY YARD
NAVAL AIR STATION – PAX RIVER
ST. MARY'S CO., MD.

HANGAR 111-HANGAR DOORS REPLACEMENT

EXTERIOR ELEVATIONS DEMOLITION

SCALE: 1/16" = 1'-0"
EPROJECT NO.: 1323946
CONSTR. CONTR. NO.: -
NAVFAC DRAWING NO. 13083173
SHEET 7 OF 35

AD-201

DRAWFORM REVISION: 10 MARCH 2009

FILE NAME: C:\pwworking\gbno\oaesy\d0898254\BLDG111-1323946-AD201.dwg LAYOUT NAME: Layout1 PLOTTED: Thursday, August 18, 2016 - 6:56pm USER: oaesy

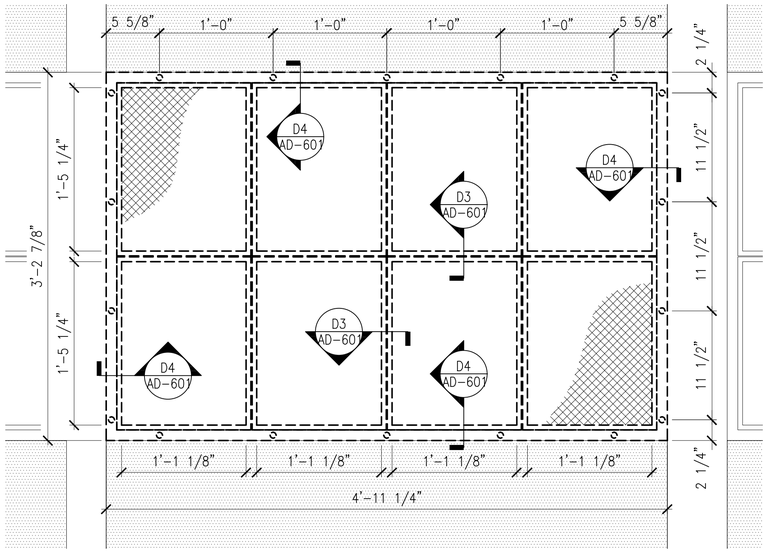

ORIGINAL HISTORIC WINDOW - TYPE 1

SCALE: 1 1/2" = 1'-0" AD-601 C2 4

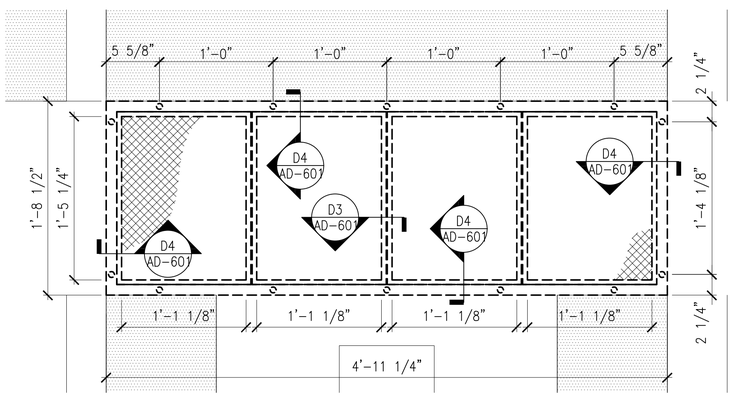

ORIGINAL HISTORIC WINDOW - TYPE 2

SCALE: 1 1/2" = 1'-0" AD-601 B2 4

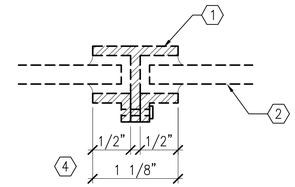

ORIGINAL INTERMEDIATE MULLION DETAIL

SCALE: 1" = 1" AD-601 D3

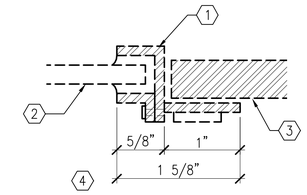

ORIGINAL EDGE MULLION DETAIL

SCALE: 1" = 1" AD-601 D4

GENERAL DEMOLITION NOTES

1. REFER TO DRAWING G-003 AND DRAWING AD-101 FOR GENERAL DEMOLITION NOTES.
2. HANGAR DOOR WINDOW SYSTEM IS HISTORIC. ALL DIMENSIONS AND LAYOUT TO BE VERIFIED ON SITE BY CONTRACTOR BEFORE FABRICATION.
3. ORIGINAL HANGAR DOOR WINDOW CONFIGURATION AND MULLION PROFILES ARE SHOWN FOR REFERENCES ONLY CONTRACTOR TO FIELD VERIFIED.
4. DOOR STRUCTURAL METAL FRAME, HANGAR DOOR EXTERIOR SIDING ARE PART OF THE HANGAR DOORS TO BE REMOVED.

KEY NOTES

1. EXISTING STEEL WINDOW FRAME TO BE REMOVED
2. EXISTING GLAZING TO BE REMOVED
3. EXISTING HANGAR DOOR METAL STRUCTURAL FRAMING TO BE REMOVED
4. DIMENSIONS SHOWN ARE FOR REFERENCES ONLY.

1" 1/2" 0 1"
SCALE: 1"= 1"

16' 8' 0 16'
SCALE: 1-1/2"= 1'-0"

SYM	DESCRIPTION	DATE	APPR

NAVFAC

ARCHITECT 12218 JOHNNIE E. HACKETT STATE OF MARYLAND 8·24·16 SEAL

JACOBS
1100 NORTH GLEBE ROAD SUITE 500
ARLINGTON, VIRGINIA 22201
TEL (571) 218-1000 FAX (571) 218-1600

A/E INFO

APPROVED

FOR COMMANDER NAVFAC

ACTIVITY

SATISFACTORY TO DATE

DES AG DRW YN CHK AG

<<PM/DM>> ----

BRANCH MANAGER --

CHIEF ENG/ARCH ---

<<-->> --

DEPARTMENT OF THE NAVY
NAVAL FACILITIES ENGINEERING COMMAND
THE NAVY YARD
NAVAL FACILITIES ENGINEERING COMMAND, WASHINGTON
WASHINGTON, D.C.
NAVAL AIR STATION - PAX RIVER
ST. MARY'S CO., MD.
HANGAR 111-HANGAR DOORS REPLACEMENT
ORIGINAL HANGAR DOOR WINDOW CONFIGURATIONS

SCALE: AS NOTED

EPROJECT NO.: 1323946

CONSTR. CONTR. NO. -

NAVFAC DRAWING NO. 13083174

SHEET 8 OF 35

AD-601

DRAWFORM REVISION: 10 MARCH 2009

FILE NAME: C:\pwworking\gbna\pawasyj\d0896254\BLDG111-1323946-AD601.dwg LAYOUT NAME: Layout1 PLOTTED: Thursday, August 18, 2016 - 6:56pm USER: nawasyj

COORDINATE WITH COR (OCCUPANTS) REGARDING FOD AND DUST BARRIER TO PROTECT AIRCRAFT. THE OCCUPANT WILL REMAIN IN HANGAR 111 CONTINUING TO MAINTAIN AND TEST AIRCRAFT DURING THE RENOVATIONS. PROVISIONS SHALL BE MADE TO PROTECT THE AIRCRAFT FROM DEBRIS AND DUST DURING THE DEMOLITION / RENOVATION AND CONSTRUCTION OF HANGAR DOORS.

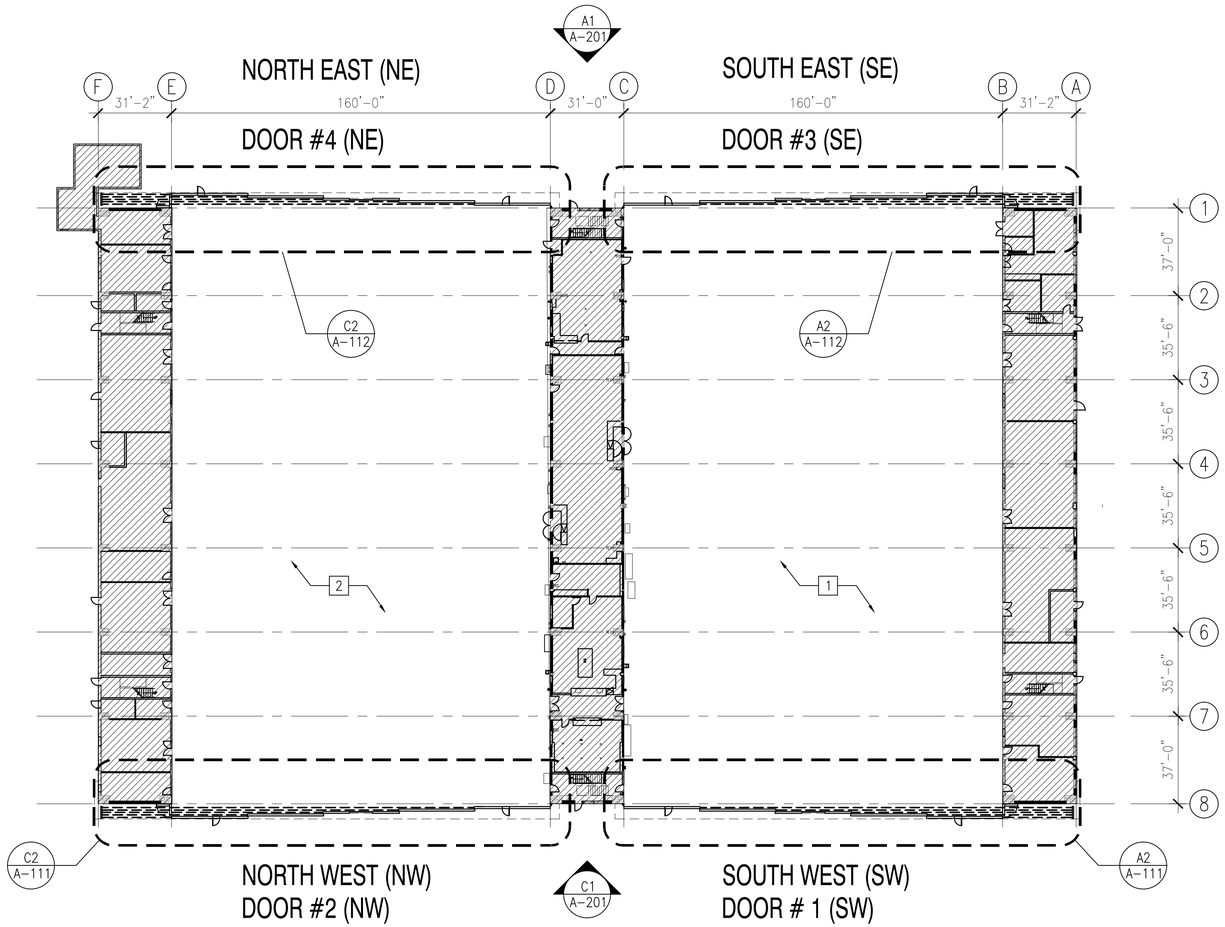

PLAN NORTH

OVERALL FLOOR PLAN

SCALE: 1/32" = 1'-0"

32' 16' 0 32'

SCALE: 1/32"= 1'-0"

GENERAL NOTES

1. REFER DRAWING G-003 FOR GENERAL NOTES, ABBREVIATIONS, GRAPHIC SYMBOLS AND MATERIAL INDICATIONS.
2. PROVIDE SNOW MELTING SYSTEM AT EACH HANGAR DOOR. SIZING AND LAYOUT SHALL BE PROVIDED TO PREVENT SNOW AND ICE BUILT-UP IN THE DOOR TRACKS AND THE APRON TO 5'-0" OUTSIDE THE HANGAR DOOR, REFER TO ELECTRICAL DRAWINGS FOR DETAIL.
3. REFER TO STRUCTURAL FOR FLOOR AND HANGAR DOOR TRACK ELEVATIONS.

KEY NOTES

1 HANGAR ROADSIDE (NIC)

2 HANGAR WATERSIDE (NIC)

LEGEND

NOT IN CONTRACT (NIC)

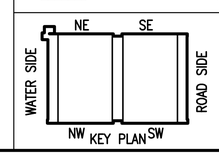

KEY PLAN

PLAN NORTH

SYM	DESCRIPTION	DATE	APPR

NAVFAC

ARCHITECT 12218 JOHNNIE E. HACKETT STATE OF MARYLAND 8·24·16 SEAL

JACOBS
1100 NORTH GLEBE ROAD SUITE 500
ARLINGTON, VIRGINIA 22201
TEL (571) 218-1000 FAX (571) 218-1600

A/E INFO

APPROVED

FOR COMMANDER NAVFAC

ACTIVITY

SATISFACTORY TO DATE

DES	AG	DRW	YN	CHK	AG

<<PM/DM>> ----

BRANCH MANAGER --

CHIEF ENG/ARCH ---

<<-->> --

DEPARTMENT OF THE NAVY
NAVAL FACILITIES ENGINEERING COMMAND
THE NAVY YARD WASHINGTON, D.C.
NAVAL FACILITIES ENGINEERING COMMAND, WASHINGTON
NAVAL AIR STATION – PAX RIVER ST. MARY'S CO., MD.

HANGAR 111-HANGAR DOORS REPLACEMENT

OVERALL FLOOR PLAN

SCALE 1/32" = 1'-0"

EPROJECT NO. 1323946

CONSTR. CONTR. NO. -

NAVFAC DRAWING NO. 13083175

SHEET 9 OF 35

A-101

DRAWFORM REVISION: 10 MARCH 2009

FILE NAME: C:\pwworking\gbno\nawesyi\d0896254\BLDG111-1323946-A101.dwg LAYOUT NAME: Layout1 PLOTTED: Thursday, August 18, 2016 - 6:57pm USER: nawesyi

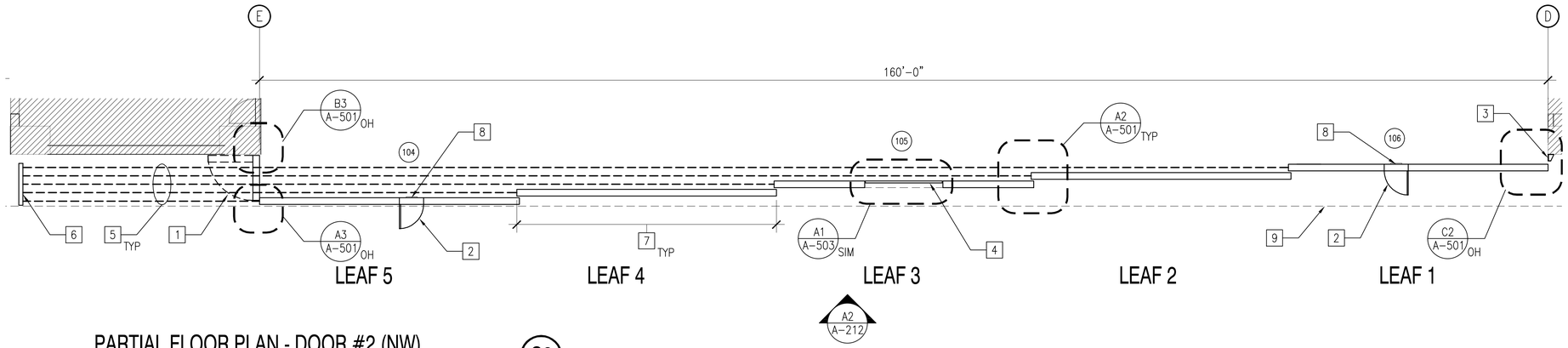

PARTIAL FLOOR PLAN - DOOR #2 (NW)

SCALE: 1/8" = 1'-0" A-111 C2

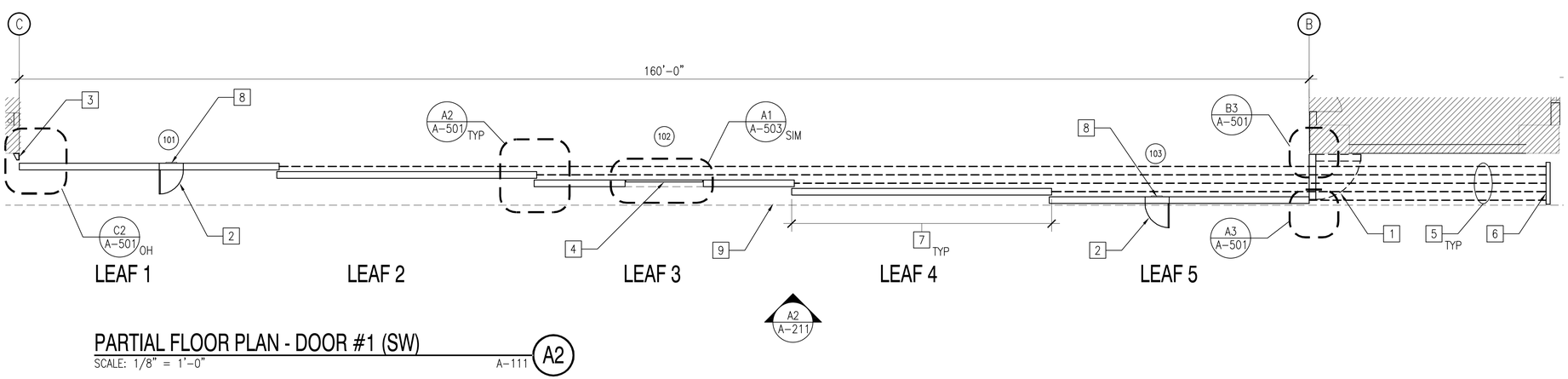

PARTIAL FLOOR PLAN - DOOR #1 (SW)

SCALE: 1/8" = 1'-0" A-111 A2

GENERAL NOTES

1. REFER TO DRAWING A-211 THROUGH A-214 FOR DOOR LOCATION.
2. PROVIDE HANGAR DOOR PULL AT LEAD EDGE OF THE HANGAR DOOR LEAD LEAF 2'-0" ABOVE GRADE.
3. PROVIDE DOOR POCKET(S) ON THE INTERIOR SIDE OF THE HANGAR DOOR LEAD AND TRAILING MOTORIZED LEAVES. SIZE AND LOCATION OF DOOR POCKET(S) SHALL ACCOMMODATE OPERATOR(S) AND PROVIDE ACCESS. DOOR POCKET(S) SHALL HAVE MIN 14 GAGE HINGED COVER WITH A LATCH FINISHED TO MATCH ADJACENT SURFACES.
4. PROVIDE TOP STOP BUMPERS AND BUMPER SUPPORTS AT HANGAR DOOR TOP TRACKS MAX 4 INCHES BEYOND END OF TRAVEL WHEN HANGAR DOOR IS IN CLOSED POSITION AT EVERY DOOR LEAF.

KEY NOTES

1. HANGAR DOOR SWING PANEL SIDE ENCLOSURE, HEIGHT TO MATCH HANGAR DOOR
2. EGRESS DOOR WITH PANIC HARDWARE
3. HANGAR DOOR EDGE CLOSURE. PROVIDE OPENING THROUGH EDGE CLOSURE FOR ELECTRICAL CONDUIT, REFER TO ELECTRICAL
4. HEAVY DUTY COMMERCIAL TYPE VERTICAL LIFT DOOR WITHIN HANGAR DOOR LEAF
5. HANGAR DOOR BOTTOM RAIL, REFER TO STRUCTURAL
6. END OF RAIL WITH SAFETY STOP
7. HANGAR DOOR LEAF
8. RECESSED EXIT LIGHT CENTERED ABOVE EGRESS DOOR
9. DASHED LINE INDICATES EDGE OF OVERHANG ABOVE

8' 4' 0 8'

SCALE: 1/8"= 1'-0"

LEGEND

NOT IN CONTRACT (NIC)

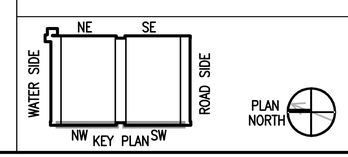

SYM	DESCRIPTION	DATE	APPR

NAVFAC

ARCHITECT 12218 JOHNNIE E. HACKETT STATE OF MARYLAND 8·24·16 SEAL

JACOBS
1100 NORTH GLEBE ROAD SUITE 500
ARLINGTON, VIRGINIA 22201
TEL (571) 218-1000 FAX (571) 218-1600

A/E INFO

APPROVED

FOR COMMANDER NAVFAC

ACTIVITY

SATISFACTORY TO DATE

DES	AG	DRW	YN	CHK	AG

<<PM/TM/>> ----

BRANCH MANAGER --

CHIEF ENG/ARCH ---

<<->> --

DEPARTMENT OF THE NAVY
NAVAL FACILITIES ENGINEERING COMMAND, WASHINGTON
THE NAVY YARD WASHINGTON, D.C.
NAVAL AIR STATION – PAX RIVER ST. MARY'S CO., MD.

HANGAR 111-HANGAR DOORS REPLACEMENT

PARTIAL FLOOR PLANS

SCALE: 1/8" = 1'-0"

EPROJECT NO.: 1323946

CONSTR. CONTR. NO. -

NAVFAC DRAWING NO. 13083176

SHEET 10 OF 35

A-111

DRAWFORM REVISION: 10 MARCH 2009

FILE NAME: C:\pwworking\gbno\rawssyl\d0896254\BLD0111-1323946-A111.dwg LAYOUT NAME: Layout1 PLOTTED: Thursday, August 18, 2016 - 6:57pm USER: rawssyl

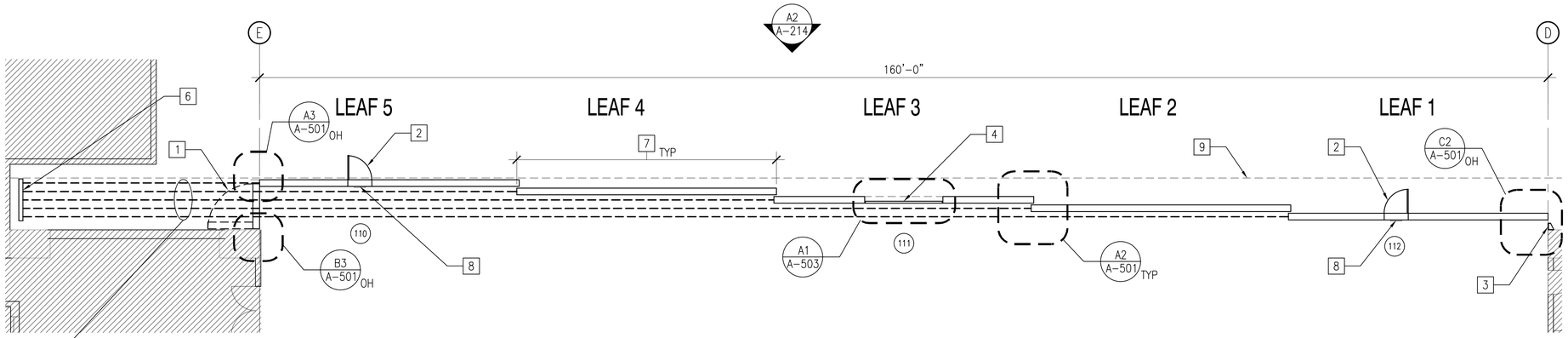

PARTIAL FLOOR PLAN - DOOR #4 (NE)

SCALE: 1/8" = 1'-0"

A-112 C2

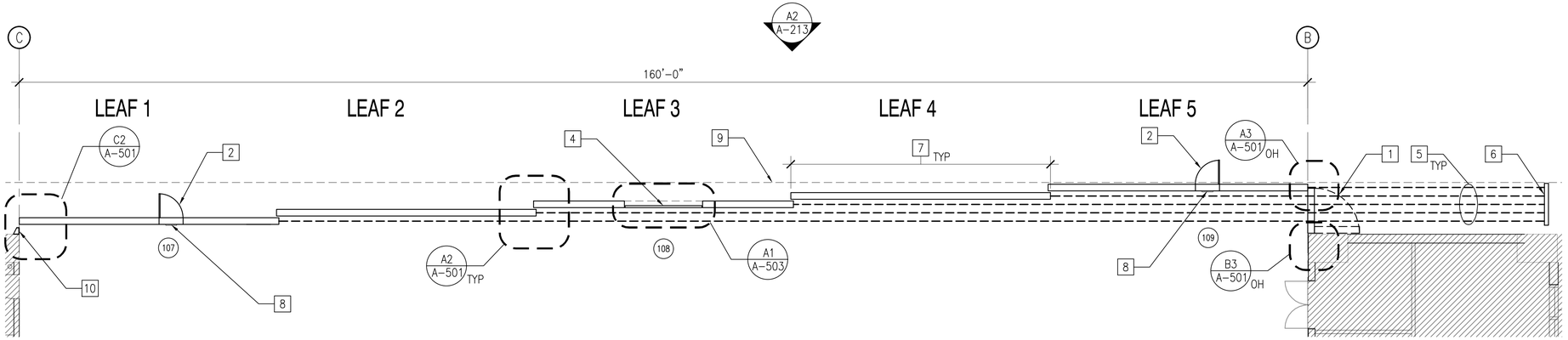

PARTIAL FLOOR PLAN - DOOR #3 (SE)

SCALE: 1/8" = 1'-0"

A-112 A2

GENERAL NOTES

1. REFER TO DRAWING A-211 THROUGH A-214 FOR DOOR LOCATION.
2. PROVIDE HANGAR DOOR PULL AT LEAD EDGE OF THE HANGAR DOOR LEAD LEAF 2'-0" ABOVE GRADE.
3. PROVIDE DOOR POCKET(S) ON THE INTERIOR SIDE OF THE HANGAR DOOR LEAD AND TRAILING MOTORIZED LEAVES. SIZE AND LOCATION OF DOOR POCKET(S) SHALL ACCOMMODATE OPERATOR(S) AND PROVIDE ACCESS. DOOR POCKET(S) SHALL HAVE MIN 14 GAGE HINGED COVER WITH A LATCH FINISHED TO MATCH ADJACENT SURFACES.
4. PROVIDE TOP STOP BUMPERS AND BUMPER SUPPORTS AT HANGAR DOOR TOP TRACKS MAX 4 INCHES BEYOND END OF TRAVEL WHEN HANGAR DOOR IS IN CLOSED POSITION AT EVERY DOOR LEAF.

KEY NOTES

1. HANGAR DOOR SWING PANEL SIDE ENCLOSURE, HEIGHT TO MATCH HANGAR DOOR
2. EGRESS DOOR WITH PANIC HARDWARE
3. HANGAR DOOR EDGE CLOSURE. PROVIDE OPENING THROUGH EDGE CLOSURE FOR ELECTRICAL CONDUIT, REFER TO ELECTRICAL
4. HEAVY DUTY COMMERCIAL TYPE VERTICAL LIFT DOOR WITHIN HANGAR DOOR LEAF
5. HANGAR DOOR BOTTOM RAIL, REFER TO STRUCTURAL
6. END OF RAIL WITH SAFETY STOP
7. HANGAR DOOR LEAF
8. RECESSED EXIT LIGHT CENTERED ABOVE EGRESS DOOR
9. DASHED LINE INDICATES EDGE OF OVERHANG ABOVE

8' 4' 0 8'

SCALE: 1/8" = 1'-0"

LEGEND

NOT IN CONTRACT (NIC)

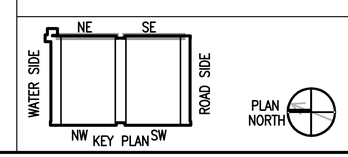

SYM	DESCRIPTION	DATE	APPR

NAVFAC

ARCHITECT 12218 JOHNNIE E. HACKETT STATE OF MARYLAND 8·24·16 SEAL

JACOBS
1100 NORTH GLEBE ROAD SUITE 500
ARLINGTON, VIRGINIA 22201
TEL (571) 218-1000 FAX (571) 218-1600

A/E INFO

APPROVED

FOR COMMANDER NAVFAC

ACTIVITY

SATISFACTORY TO DATE

DES AG DRW YN CHK AG

<<PM/TM/>> ----

BRANCH MANAGER --

CHIEF ENG/ARCH ---

<<->> --

DEPARTMENT OF THE NAVY
NAVAL FACILITIES ENGINEERING COMMAND
THE NAVY YARD
NAVAL FACILITIES ENGINEERING COMMAND, WASHINGTON
WASHINGTON, D.C.
NAVAL AIR STATION – PAX RIVER
ST. MARY'S CO., MD.

HANGAR 111-HANGAR DOORS REPLACEMENT

PARTIAL FLOOR PLANS

SCALE: 1/8" = 1'-0"

EPROJECT NO.: 1323946

CONSTR. CONTR. NO. –

NAVFAC DRAWING NO. 13083177

SHEET 11 OF 35

A-112

DRAWFORM REVISION: 10 MARCH 2009

FILE NAME: C:\pwworking\gbno\\nawssyi\d0896254\BLD0111-1323946-A112.dwg LAYOUT NAME: Layout1 PLOTTED: Thursday, August 18, 2016 - 6:57pm USER: nawssyi

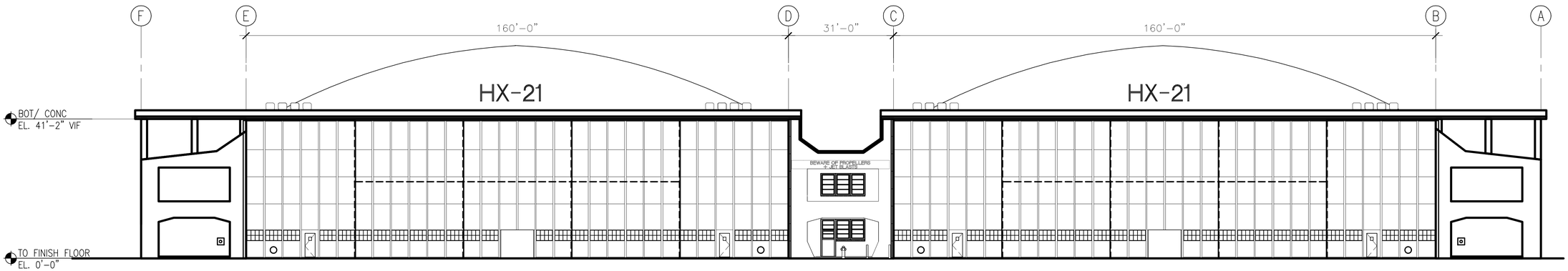

DOOR #2 (NW)

DOOR #1 (SW)

EXTERIOR ELEVATION - WEST (C1)

1/16" = 1'-0" A-201

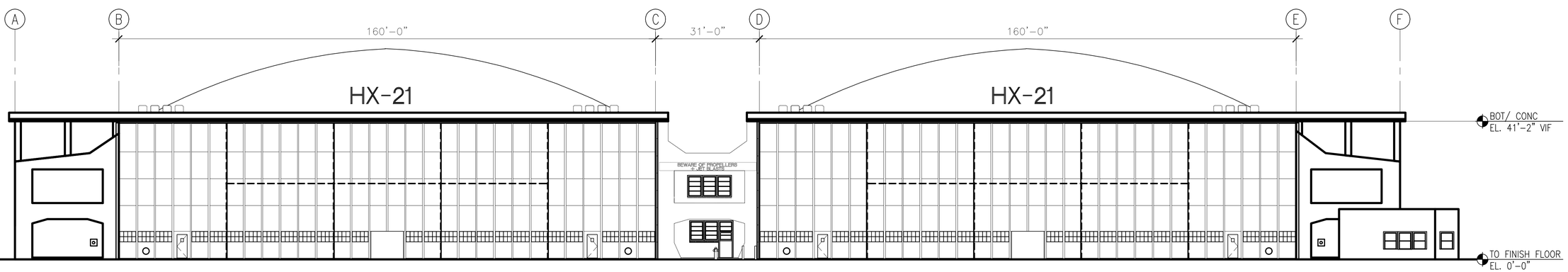

DOOR #3 (SE)

DOOR #4 (NE)

EXTERIOR ELEVATION - EAST (A1)

1/16" = 1'-0" A-201

16' 8' 0 16'

SCALE: 1/16" = 1'-0"

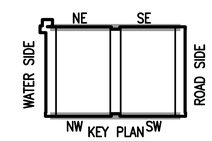

KEY PLAN

APPR	DATE	DESCRIPTION	SYM

NAVFAC

ARCHITECT 12218 JOHNNIE E. HACKETT STATE OF MARYLAND 8·24·16 SEAL

JACOBS
1100 NORTH GLEBE ROAD SUITE 500
ARLINGTON, VIRGINIA 22201
TEL (571) 218-1000 FAX (571) 218-1800

A/E INFO

APPROVED

FOR COMMANDER NAVFAC

ACTIVITY

SATISFACTORY TO DATE

DES AG DRW YN CHK AG

<<PM/DM>> ----

BRANCH MANAGER --

CHIEF ENG/ARCH ---

<<-->> --

DEPARTMENT OF THE NAVY
NAVAL FACILITIES ENGINEERING COMMAND
NAVAL FACILITIES ENGINEERING COMMAND, WASHINGTON
WASHINGTON, D.C.
THE NAVY YARD

NAVAL AIR STATION – PAX RIVER
ST. MARY'S CO., MD.

HANGAR 111-HANGAR DOORS REPLACEMENT

EXTERIOR ELEVATIONS

SCALE: 1/16" = 1'-0"

EPROJECT NO.: 1323946

CONSTR. CONTR. NO.
–

NAVFAC DRAWING NO.
13083178

SHEET 12 OF 35

A-201

DRAWFORM REVISION: 10 MARCH 2009

FILE NAME: C:\pwworking\gbrn\pawsiy\d0896254\BLDG111-1323946-A201.dwg LAYOUT NAME: Layout1 PLOTTED: Thursday, August 18, 2016 - 6:57pm USER: rawsiy

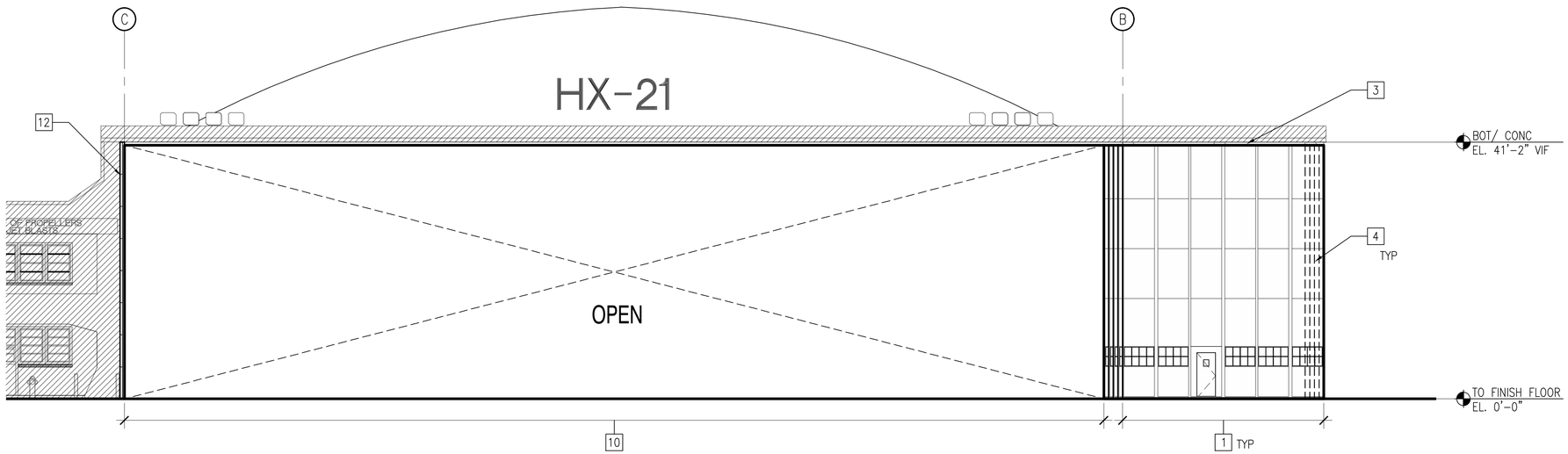

PARTIAL ELEVATION - DOOR #1 (SW) (C2)

SCALE: 3/32" = 1'-0" A-211

NOTE: REFER TO PARTIAL ELEVATION A2/A211 FOR ADDITIONAL INFORMATION

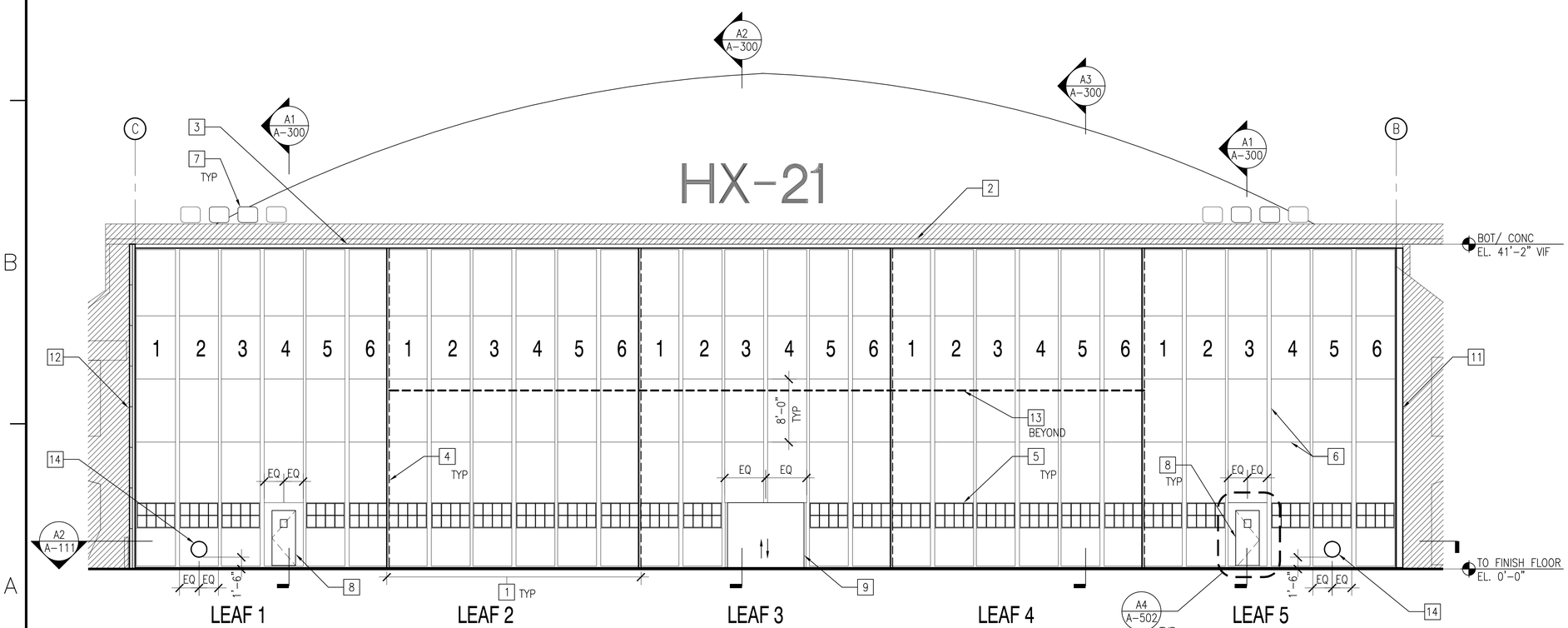

PARTIAL ELEVATION - DOOR #1 (SW) (A2)

SCALE: 1/8" = 1'-0" A-211

SCALE: 1/8"= 1'-0"

SCALE: 3/32" = 1'-0"

GENERAL NOTES

1. WINDOWS AND DOORS PART OF HANGAR DOOR SHALL MATCH THE HISTORICAL ORIGINAL HANGAR DOOR.
2. PROVIDE ANCHOR SYSTEM FOR HANGAR DOOR SWING PANEL TO KEEP THE PANEL IN AN OPEN POSITION. ANCHOR SYSTEM SHALL BE SECURED TO ADJACENT EXISTING BUILDING EXTERIOR WALL. REFER TO C2/A-212 FOR ADDITIONAL INFORMATION.
3. PROVIDE FINISH FOR HANGAR DOOR SYSTEM EXPOSED EXTERIOR AND INTERIOR FACES. COLOR SHALL BE DETERMINED BY OWNER.
4. PROVIDE METAL COVERING ON THE INTERIOR FACE OF THE HANGAR DOOR, LAYOUT TO MATCH EXTERIOR COVERING. PROVIDE FULL SEALANT JOINT AROUND THE PERIMETER OF THE COVERING PANEL AT HANGAR DOOR EXTERIOR AND INTERIOR FACE.
5. REFER TO C2/A-211 FOR MINIMUM CLEAR HANGAR DOOR OPENING WHEN HANGAR DOOR IS IN FULL OPEN POSITION.
6. EXTERIOR AND INTERIOR HANGAR DOOR LEAF IS COMPRISED OF SIX HORIZONTAL EQUAL MODULES.

KEY NOTES

1. HANGAR DOOR LEAF
2. EXISTING CONCRETE OVERHANG
3. HANGAR DOOR TOP TRACK
4. DASHED LINE INDICATES EDGE OF HANGAR DOOR BEYOND
5. HANGAR DOOR WINDOW TYPE 1, REFER TO C2/A-601
6. EXTERIOR METAL COVERING SECURED TO HANGAR DOOR STRUCTURAL FRAMING. EDGE OF METAL COVERING SHALL ALIGN WITH EDGE OF HANGAR DOOR WINDOW, REFER TO DETAIL C2/A-601
7. EXISTING EXTERIOR LIGHT
8. EGRESS DOOR WITH PANIC HARDWARE
9. HEAVY DUTY COMMERCIAL TYPE VERTICAL LIFT DOOR
10. MINIMUM CLEAR HANGAR DOOR OPENING SHALL BE 157'-0"
11. HANGAR DOOR SWING PANEL SIDE CLOSURE
12. BUILT-UP METAL BRACKET HANGAR DOOR EDGE CLOSURE
13. DASHED LINE INDICATES CABLE DRIVE SYSTEM FOR HANGAR DOOR. THERE SHALL BE NO EXPOSED CABLES ON EXTERIOR
14. 24 INCH DIAMETER VENT FOR "RHINE AIR" HOSE WITH A SWING VENT COVER ON BOTH THE INNER AND OUTER SIDE OF THE HANGAR DOOR LEAF. SWING VENT COVER SHALL BE A SCREW TYPE AT 12 O'CLOCK POSITION.

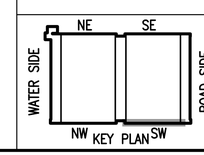

LEGEND

NOT IN CONTRACT (NIC)

SYM	DESCRIPTION	DATE	APPR

NAVFAC

ARCHITECT 12218 JOHNNIE E. HACKETT STATE OF MARYLAND 8·24·16 SEAL

JACOBS
1100 NORTH GLEBE ROAD SUITE 500
ARLINGTON, VIRGINIA 22201
TEL (571) 218-1000 FAX (571) 218-1600

A/E INFO

APPROVED

FOR COMMANDER NAVFAC

ACTIVITY

SATISFACTORY TO DATE

DES	AG	DRW	YN	CHK	AG

<<PM/DM>> ----
BRANCH MANAGER --
CHIEF ENG/ARCH ---
<<--->> --

DEPARTMENT OF THE NAVY
NAVAL FACILITIES ENGINEERING COMMAND
THE NAVY YARD WASHINGTON, D.C.
NAVAL FACILITIES ENGINEERING COMMAND, WASHINGTON
NAVAL AIR STATION - PAX RIVER ST. MARY'S CO., MD.
HANGAR 111-HANGAR DOORS REPLACEMENT
PARTIAL ELEVATION - DOOR SW

SCALE: 1/8" = 1'-0"
EPROJECT NO. 1323946
CONSTR. CONTR. NO. -
NAVFAC DRAWING NO. 13083179
SHEET 13 OF 35
A-211

DRAWFORM REVISION: 10 MARCH 2009

FILE NAME: C:\pwworking\jacs\nawsysj\d0896254\BUD0111-1323946-A211.dwg LAYOUT NAME: Layout1 PLOTTED: Thursday, August 18, 2016 - 6:57pm USER: nawsysj

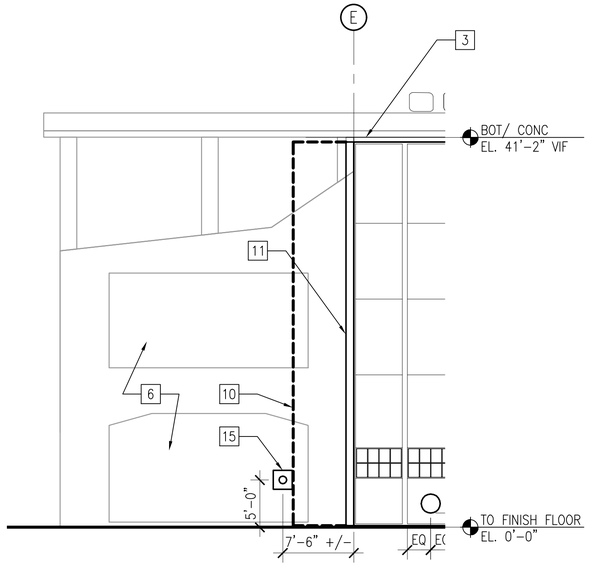

PARTIAL ELEVATION - DOOR #2 (NW) (C2)

SCALE: 1/8" = 1'-0" A-212

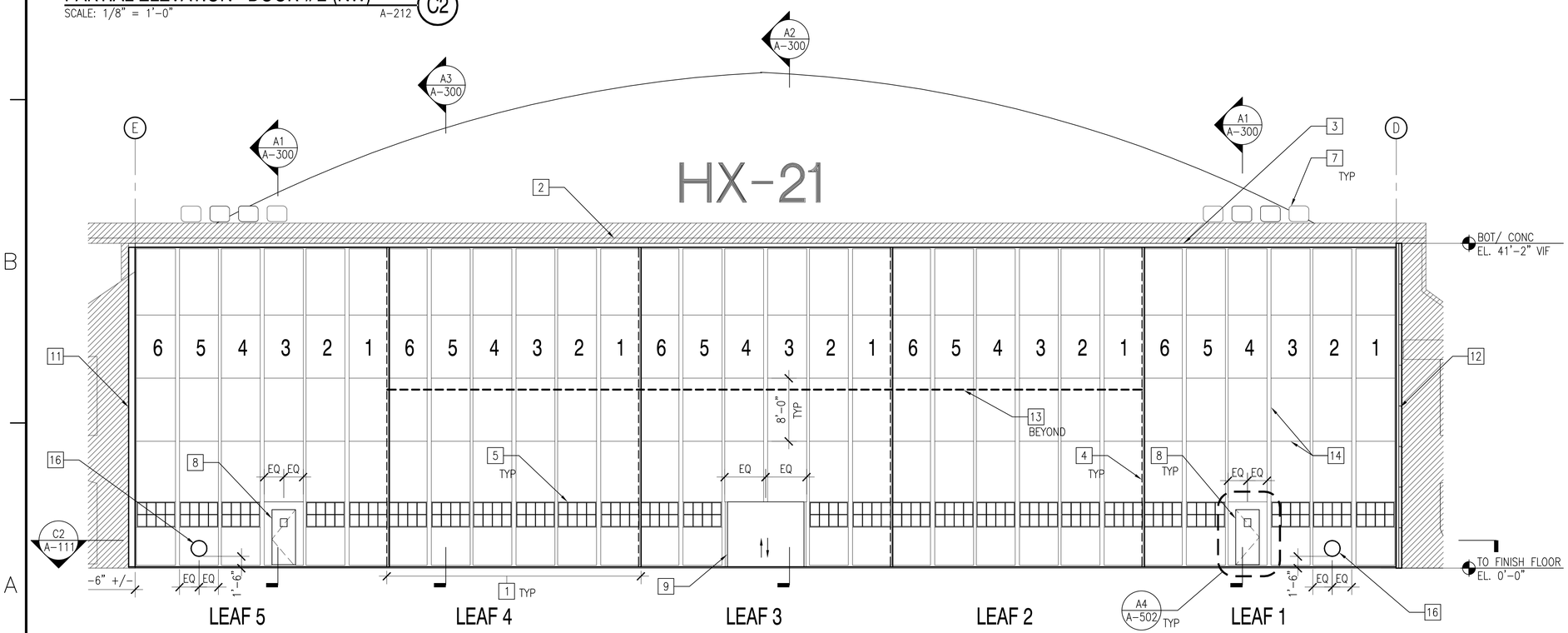

PARTIAL ELEVATION - DOOR #2 (NW) (A2)

SCALE: 1/8" = 1'-0" A-212

8' 4' 0 8'

SCALE: 1/8"= 1'-0"

GENERAL NOTES

1. WINDOWS AND DOORS PART OF HANGAR DOOR SHALL MATCH THE HISTORICAL ORIGINAL HANGAR DOOR.
2. PROVIDE ANCHOR SYSTEM FOR HANGAR DOOR SWING PANEL TO KEEP THE PANEL IN AN OPEN POSITION. ANCHOR SYSTEM SHALL BE SECURED TO ADJACENT EXISTING BUILDING EXTERIOR WALL. REFER TO C2/A-212 FOR ADDITIONAL INFORMATION.
3. PROVIDE FINISH FOR HANGAR DOOR SYSTEM EXPOSED EXTERIOR AND INTERIOR FACES. COLOR SHALL BE DETERMINED BY OWNER.
4. PROVIDE METAL COVERING ON THE INTERIOR FACE OF THE HANGAR DOOR, LAYOUT TO MATCH EXTERIOR COVERING. PROVIDE FULL SEALANT JOINT AROUND THE PERIMETER OF THE COVERING PANEL AT HANGAR DOOR EXTERIOR AND INTERIOR FACE.
5. REFER TO C2/A-211 FOR MINIMUM CLEAR HANGAR DOOR OPENING WHEN HANGAR DOOR IS IN FULL OPEN POSITION.
6. EXTERIOR AND INTERIOR HANGAR DOOR LEAF IS COMPRISED OF SIX HORIZONTAL EQUAL MODULES.

KEY NOTES

1. HANGAR DOOR MODULE
2. EXISTING CONCRETE OVERHANG
3. HANGAR DOOR TOP TRACK
4. DASHED LINE INDICATES EDGE OF HANGAR DOOR BEYOND
5. HANGAR DOOR WINDOW TYPE 1, REFER TO C2/A-601
6. EXISTING HANGAR BUILDING
7. EXISTING EXTERIOR LIGHT
8. EGRESS DOOR WITH EGRESS HARDWARE
9. HEAVY DUTY COMMERCIAL TYPE VERTICAL LIFT DOOR
10. DASHED LINE INDICATES HANGAR DOOR SWING PANEL IN AN OPEN POSITION
11. HANGAR DOOR SWING PANEL SIDE CLOSURE
12. BUILT-UP METAL BRACKET HANGAR DOOR EDGE CLOSURE
13. DASHED LINE INDICATES CABLE DRIVE SYSTEM FOR HANGAR DOOR. THERE SHALL BE NO EXPOSED CABLES ON EXTERIOR
14. EXTERIOR METAL COVERING SECURED TO HANGAR DOOR STRUCTURAL FRAMING. EDGE OF METAL COVERING SHALL ALIGN WITH EDGE OF HANGAR DOOR WINDOW, REFER TO DETAIL C2/A-601
15. HANGAR DOOR SWING PANEL ANCHOR SYSTEM ON A 2'-0" X 2'-0" METAL PLATE SECURED TO EXISTING HANGAR BUILDING EXTERIOR WALL
16. 24 INCH DIAMETER VENT FOR "RHINE AIR" HOSE WITH A SWING VENT COVER ON BOTH THE INNER AND OUTER SIDE OF THE HANGAR DOOR LEAF. SWING VENT COVER SHALL BE A SCREW TYPE AT 12 O'CLOCK POSITION.

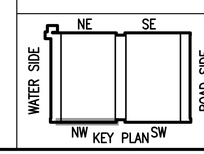

LEGEND

NOT IN CONTRACT (NIC)

SYM	DESCRIPTION	DATE	APPR

NAVFAC

ARCHITECT 12218 JOHNNIE E. HACKETT STATE OF MARYLAND 8·24·16 SEAL

JACOBS
1100 NORTH GLEBE ROAD SUITE 500
ARLINGTON, VIRGINIA 22201
TEL (571) 218-1000 FAX (571) 218-1800
A/E INFO

APPROVED
FOR COMMANDER NAVFAC
ACTIVITY
SATISFACTORY TO DATE

DES	AG	DRW	YN	CHK	AG
<<PM/DM>>	----				
BRANCH MANAGER	--				
CHIEF ENG/ARCH	---				
<<-->>	--				

DEPARTMENT OF THE NAVY
NAVAL FACILITIES ENGINEERING COMMAND
THE NAVY YARD WASHINGTON, D.C.
NAVAL FACILITIES ENGINEERING COMMAND, WASHINGTON
NAVAL AIR STATION - PAX RIVER ST. MARY'S CO., MD.
HANGAR 111-HANGAR DOORS REPLACEMENT
PARTIAL ELEVATION - DOOR NW

SCALE: 1/8" = 1'-0"
EPROJECT NO.: 1323946
CONSTR. CONTR. NO. -
NAVFAC DRAWING NO. 13083180
SHEET 14 OF 35
A-212

DRAWFORM REVISION: 10 MARCH 2009

FILE NAME: C:\pwworking\pbms\nawesyj\d0896254\BUD111-1323946-A212.dwg LAYOUT NAME: Layout1 PLOTTED: Thursday, August 18, 2016 - 6:57pm USER: nawesyj

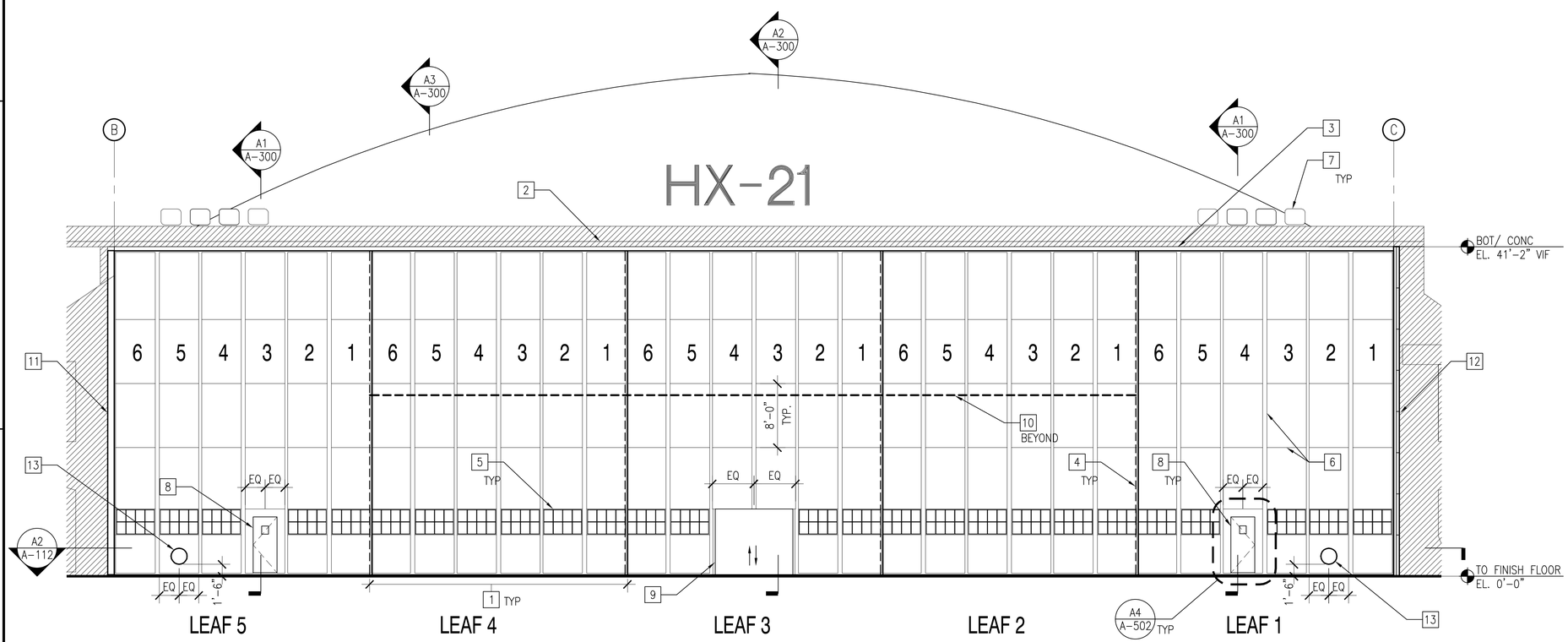

PARTIAL ELEVATION - DOOR #3 (SE)

SCALE: 1/8" = 1'-0"

A-213 (A2)

8' 4' 0 8'

SCALE: 1/8"= 1'-0"

GENERAL NOTES

1. WINDOWS AND DOORS PART OF HANGAR DOOR SHALL MATCH THE HISTORICAL ORIGINAL HANGAR DOOR.
2. PROVIDE ANCHOR SYSTEM FOR HANGAR DOOR SWING PANEL TO KEEP THE PANEL IN AN OPEN POSITION. ANCHOR SYSTEM SHALL BE SECURED TO ADJACENT EXISTING BUILDING EXTERIOR WALL. REFER TO C2/A-212 FOR ADDITIONAL INFORMATION.
3. PROVIDE FINISH FOR HANGAR DOOR SYSTEM EXPOSED EXTERIOR AND INTERIOR FACES. COLOR SHALL BE DETERMINED BY OWNER.
4. PROVIDE METAL COVERING ON THE INTERIOR FACE OF THE HANGAR DOOR, LAYOUT TO MATCH EXTERIOR COVERING. PROVIDE FULL SEALANT JOINT AROUND THE PERIMETER OF THE COVERING PANEL AT HANGAR DOOR EXTERIOR AND INTERIOR FACE.
5. REFER TO C2/A-211 FOR MINIMUM CLEAR HANGAR DOOR OPENING WHEN HANGAR DOOR IS IN FULL OPEN POSITION.
6. EXTERIOR AND INTERIOR HANGAR DOOR LEAF IS COMPRISED OF SIX HORIZONTAL EQUAL MODULES.

KEY NOTES

1. HANGAR DOOR LEAF
2. EXISTING CONCRETE OVERHANG
3. HANGAR DOOR TOP TRACK
4. DASHED LINE INDICATES EDGE OF HANGAR DOOR BEYOND
5. HANGAR DOOR WINDOW TYPE 1, REFER TO C2/A-601
6. EXTERIOR METAL COVERING SECURED TO HANGAR DOOR STRUCTURAL FRAMING. EDGE OF METAL COVERING SHALL ALIGN WITH EDGE OF HANGAR DOOR WINDOW, REFER TO DETAIL C2/A-601
7. EXISTING EXTERIOR LIGHT
8. EGRESS DOOR WITH PANIC HARDWARE
9. HEAVY DUTY COMMERCIAL TYPE VERTICAL LIFT DOOR
10. DASHED LINE INDICATES CABLE DRIVE SYSTEM FOR HANGAR DOOR. THERE SHALL BE NO EXPOSED CABLES ON EXTERIOR
11. HANGAR DOOR SWING PANEL SIDE CLOSURE
12. BUILT-UP METAL BRACKET HANGAR DOOR EDGE CLOSURE
13. 24 INCH DIAMETER VENT FOR "RHINE AIR" HOSE WITH A SWING VENT COVER ON BOTH THE INNER AND OUTER SIDE OF THE HANGAR DOOR LEAF. SWING VENT COVER SHALL BE A SCREW TYPE AT 12 O'CLOCK POSITION.

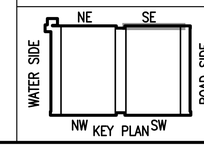

KEY PLAN

LEGEND

NOT IN CONTRACT (NIC)

SYM	DESCRIPTION	DATE	APPR

NAVFAC

ARCHITECT 12218 JOHNNIE E. HACKETT STATE OF MARYLAND 8·24·16 SEAL

JACOBS
1100 NORTH GLEBE ROAD SUITE 500
ARLINGTON, VIRGINIA 22201
TEL (571) 218-1000 FAX (571) 218-1800

A/E INFO

APPROVED

FOR COMMANDER NAVFAC

ACTIVITY

SATISFACTORY TO DATE

DES	AG	DRW	YN	CHK	AG
<<PM/DM>>	----				
BRANCH MANAGER	--				
CHIEF ENG/ARCH	---				
<<-->>	--				

DEPARTMENT OF THE NAVY
NAVAL FACILITIES ENGINEERING COMMAND
THE NAVY YARD WASHINGTON, D.C.
NAVAL FACILITIES ENGINEERING COMMAND, WASHINGTON
NAVAL AIR STATION - PAX RIVER ST. MARY'S CO., MD.

HANGAR 111-HANGAR DOORS REPLACEMENT

PARTIAL ELEVATION - DOOR SE

SCALE: 1/8" = 1'-0"

EPROJECT NO.: 1323946

CONSTR. CONTR. NO. -

NAVFAC DRAWING NO. 13083181

SHEET 15 OF 35

A-213

DRAWFORM REVISION: 10 MARCH 2009

FILE NAME: C:\pwworking\pbms\nxessyi\d0896254\BUD111-1323946-A213.dwg LAYOUT NAME: Layout1 PLOTTED: Thursday, August 18, 2016 - 6:57pm USER: nxessyi

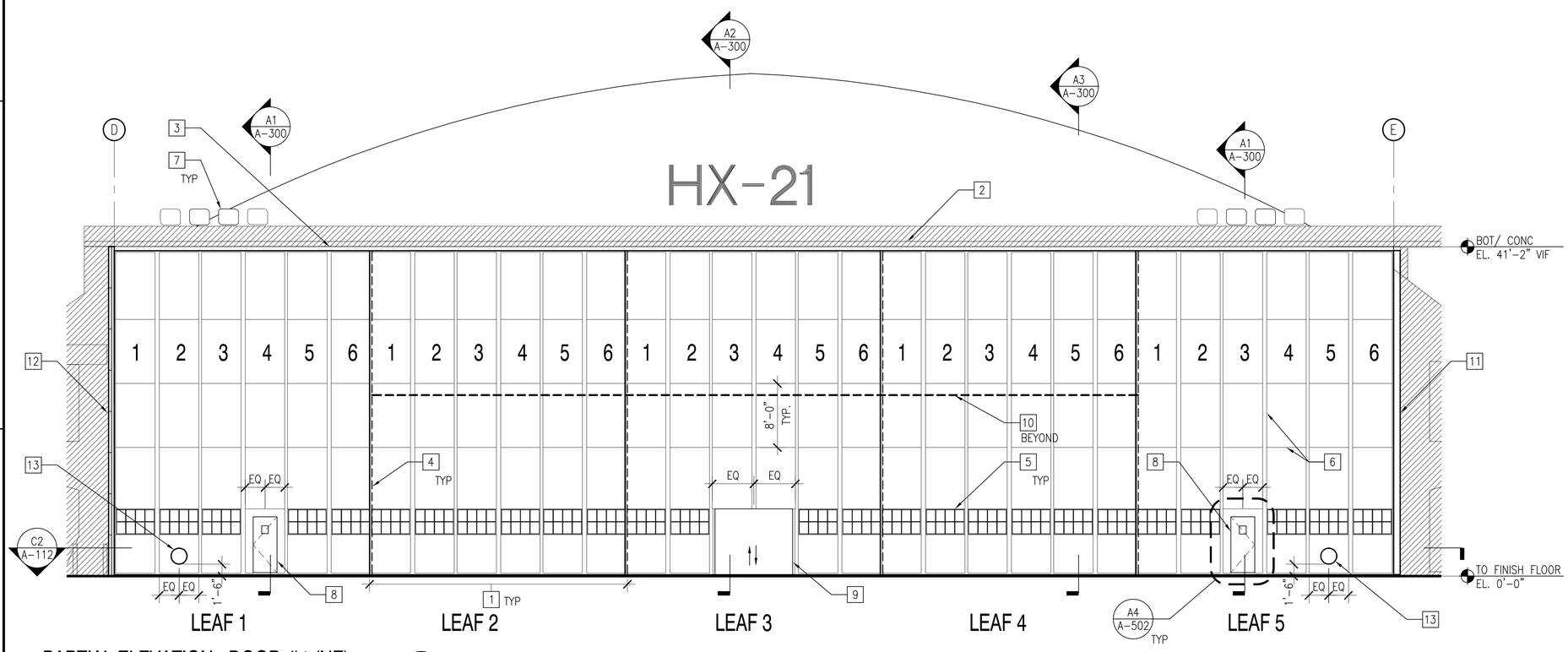

PARTIAL ELEVATION - DOOR #4 (NE)

SCALE: 1/8" = 1'-0" A-214 (A2)

8' 4' 0 8'
SCALE: 1/8"= 1'-0"

GENERAL NOTES

1. WINDOWS AND DOORS PART OF HANGAR DOOR SHALL MATCH THE HISTORICAL ORIGINAL HANGAR DOOR.
2. PROVIDE ANCHOR SYSTEM FOR HANGAR DOOR SWING PANEL TO KEEP THE PANEL IN AN OPEN POSITION. ANCHOR SYSTEM SHALL BE SECURED TO ADJACENT EXISTING BUILDING EXTERIOR WALL. REFER TO C2/A-212 FOR ADDITIONAL INFORMATION.
3. PROVIDE FINISH FOR HANGAR DOOR SYSTEM EXPOSED EXTERIOR AND INTERIOR FACES. COLOR SHALL BE DETERMINED BY OWNER.
4. PROVIDE METAL COVERING ON THE INTERIOR FACE OF THE HANGAR DOOR, LAYOUT TO MATCH EXTERIOR COVERING. PROVIDE FULL SEALANT JOINT AROUND THE PERIMETER OF THE COVERING PANEL AT HANGAR DOOR EXTERIOR AND INTERIOR FACE.
5. REFER TO C2/A-211 FOR MINIMUM CLEAR HANGAR DOOR OPENING WHEN HANGAR DOOR IS IN FULL OPEN POSITION.
6. EXTERIOR AND INTERIOR HANGAR DOOR LEAF IS COMPRISED OF SIX HORIZONTAL EQUAL MODULES.

KEY NOTES

1. HANGAR DOOR LEAF
2. EXISTING CONCRETE OVERHANG
3. HANGAR DOOR TOP TRACK
4. DASHED LINE INDICATES EDGE OF HANGAR DOOR BEYOND
5. HANGAR DOOR WINDOW TYPE 1, REFER TO C2/A-601
6. EXTERIOR METAL COVERING SECURED TO HANGAR DOOR STRUCTURAL FRAMING. EDGE OF METAL COVERING SHALL ALIGN WITH EDGE OF HANGAR DOOR WINDOW, REFER TO DETAIL C2/A-601
7. EXISTING EXTERIOR LIGHT
8. EGRESS DOOR WITH PANIC HARDWARE
9. HEAVY DUTY COMMERCIAL TYPE VERTICAL LIFT DOOR
10. DASHED LINE INDICATES CABLE DRIVE SYSTEM FOR HANGAR DOOR. THERE SHALL BE NO EXPOSED CABLES ON EXTERIOR
11. HANGAR DOOR SWING PANEL SIDE CLOSURE
12. BUILT-UP METAL BRACKET HANGAR DOOR EDGE CLOSURE
13. 24 INCH DIAMETER VENT FOR "RHINE AIR" HOSE WITH A SWING VENT COVER ON BOTH THE INNER AND OUTER SIDE OF THE HANGAR DOOR LEAF. SWING VENT COVER SHALL BE A SCREW TYPE AT 12 O'CLOCK POSITION.

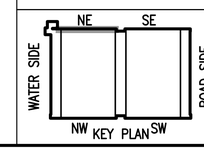

LEGEND

NOT IN CONTRACT (NIC)

SYM	DESCRIPTION	DATE	APPR

NAVFAC

ARCHITECT 12218 JOHNNIE E. HACKETT STATE OF MARYLAND
8·24·16
SEAL

JACOBS
1100 NORTH GLEBE ROAD SUITE 500
ARLINGTON, VIRGINIA 22201
TEL (571) 218-1000 FAX (571) 218-1800
A/E INFO

APPROVED
FOR COMMANDER NAVFAC
ACTIVITY

SATISFACTORY TO DATE

DES	AG	DRW	YN	CHK	AG
<<PM/DM>>			----		
BRANCH MANAGER			--		
CHIEF ENG/ARCH			---		
<<-->>			--		

DEPARTMENT OF THE NAVY
NAVAL FACILITIES ENGINEERING COMMAND
WASHINGTON, D.C.
THE NAVY YARD
NAVAL FACILITIES ENGINEERING COMMAND, WASHINGTON
NAVAL AIR STATION - PAX RIVER
ST. MARY'S CO., MD.
HANGAR 111-HANGAR DOORS REPLACEMENT
PARTIAL ELEVATION - DOOR NE

SCALE: 1/8" = 1'-0"
EPROJECT NO.: 1323946
CONSTR. CONTR. NO.
-
NAVFAC DRAWING NO.
13083182
SHEET 16 OF 35
A-214

DRAWFORM REVISION: 10 MARCH 2009

FILE NAME: C:\pwworking\pbms\nwessyi\d0896254\BUD111-1323946-A214.dwg LAYOUT NAME: Layout1 PLOTTED: Thursday, August 18, 2016 - 6:57pm USER: nwessyi

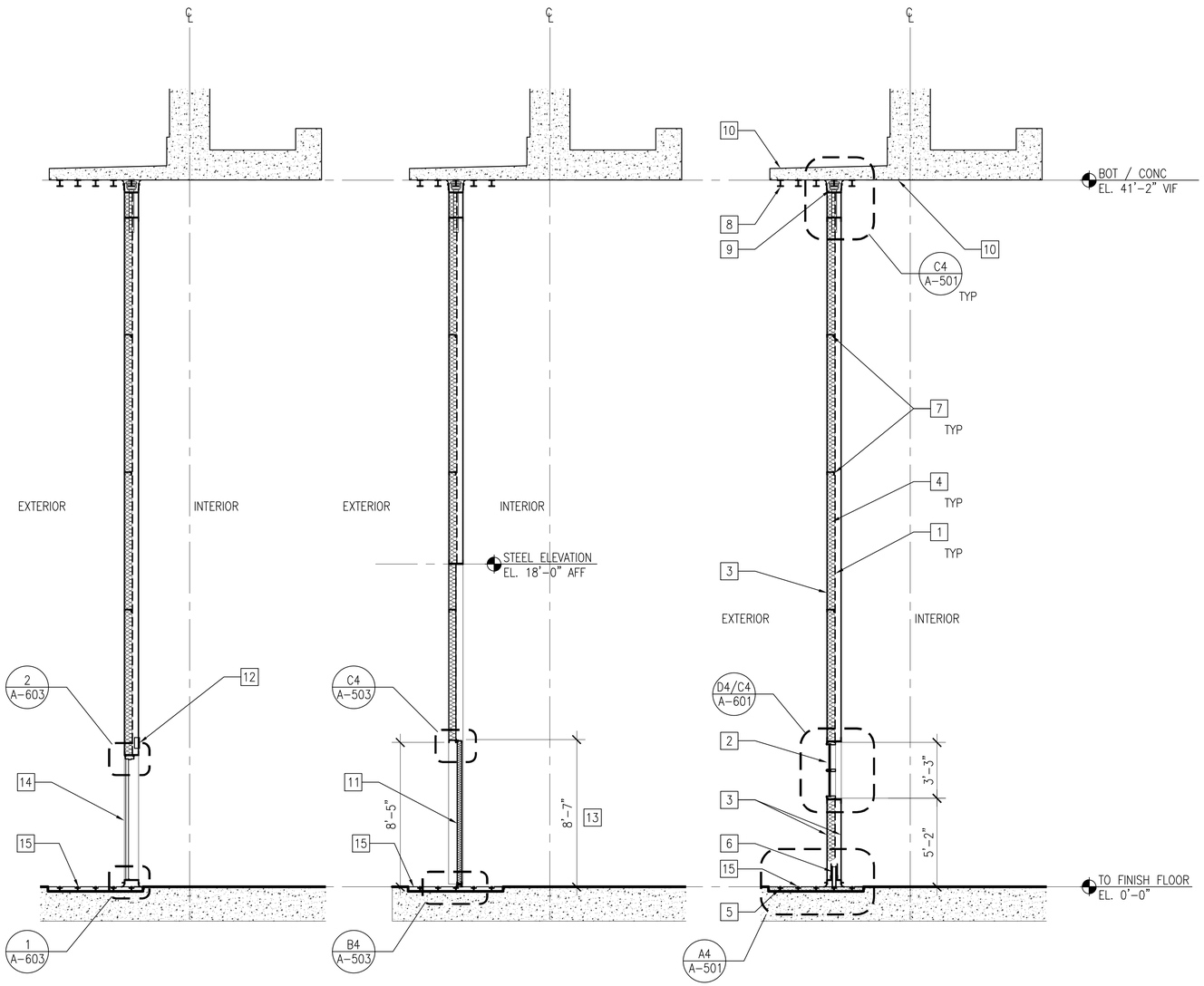

HANGAR DOOR SECTION A1

SCALE: 1/4" = 1'-0" A-300

REFER TO SECTION A3/A-300 FOR ADDITIONAL INFORMATION

HANGAR DOOR SECTION A2

SCALE: 1/4" = 1'-0" A-300

REFER TO SECTION A3/A-300 FOR ADDITIONAL INFORMATION

HANGAR DOOR SECTION A3

SCALE: 1/4" = 1'-0" A-300

GENERAL NOTES

1. REFER TO DRAWING G-003 FOR GENERAL NOTES

KEY NOTES

1. DASHED LINE INDICATES VAPOR BARRIER
2. INSULATED GLASS WINDOW SYSTEM
3. HANGAR DOOR EXTERIOR METAL PANEL
4. R19 BATT INSULATION
5. DOOR BOTTOM RAIL
6. HANGAR DOOR ROLLER BEARING
7. HANGAR DOOR STRUCTURAL FRAMING, REFER TO STRUCTURAL
8. HANGAR DOOR TOP TRACK TO BE ALIGNED WITH HANGAR DOOR BOTTOM RAIL BELOW
9. TELESCOPING TOP ROLLER GUIDE
10. EXISTING CONCRETE STRUCTURE
11. INSULATED VERTICAL LIFT DOOR, PART OF HANGAR DOOR ASSEMBLY
12. CENTERED RECESSED EXIT LIGHT ABOVE EGRESS DOOR, PROVIDE ACCESS DOOR 2'-0" X 2'-0" ADJACENT TO EXIT LIGHT TO SERVICE EXIT LIGHT. ACCESS DOOR FINISH SHALL MATCH HANGAR DOOR INTERIOR FACE FINISH.
13. ALIGN DOOR FRAME HEAD BOTTOM EDGE WITH ADJACENT RIBBON WINDOW FRAME IN THE SAME HANGAR DOOR LEAF.
14. EGRESS DOOR WITH PANIC HARDWARE
15. REFER TO ELECTRICAL & STRUCTURAL DRAWINGS FOR SNOW MELT.

4' 2' 0 4'

SCALE: 1/4"= 1'-0"

SYM	DESCRIPTION	DATE	APPR

NAVFAC

ARCHITECT 12218 JOHNNIE E. HACKETT STATE OF MARYLAND 8·24·16 SEAL

JACOBS
1100 NORTH GLEBE ROAD SUITE 500
ARLINGTON, VIRGINIA 22201
TEL (571) 218-1000 FAX (571) 218-1600
A/E INFO

APPROVED
FOR COMMANDER NAVFAC
ACTIVITY

SATISFACTORY TO DATE

DES	AG	DRW	YN	CHK	AG

<<PM/DM>> ----
BRANCH MANAGER --
CHIEF ENG/ARCH ---
<<->> --

DEPARTMENT OF THE NAVY
NAVAL FACILITIES ENGINEERING COMMAND
THE NAVY YARD WASHINGTON, D.C.
NAVAL FACILITIES ENGINEERING COMMAND, WASHINGTON
NAVAL AIR STATION – PAX RIVER ST. MARY'S CO., MD.
HANGAR 111-HANGAR DOORS REPLACEMENT
HANGAR DOOR SECTIONS

SCALE: 1/4" = 1'-0"
EPROJECT NO.: 1323946
CONSTR. CONTR. NO. -
NAVFAC DRAWING NO. 13083183
SHEET 17 OF 35
A-300

DRAWFORM REVISION: 10 MARCH 2009

FILE NAME: C:\pwworking\gbno\nawssyi\d0896254\BLDG111-1323946-A300.dwg LAYOUT NAME: Layout1 PLOTTED: Thursday, August 18, 2016 - 6:58am USER: nawssyi

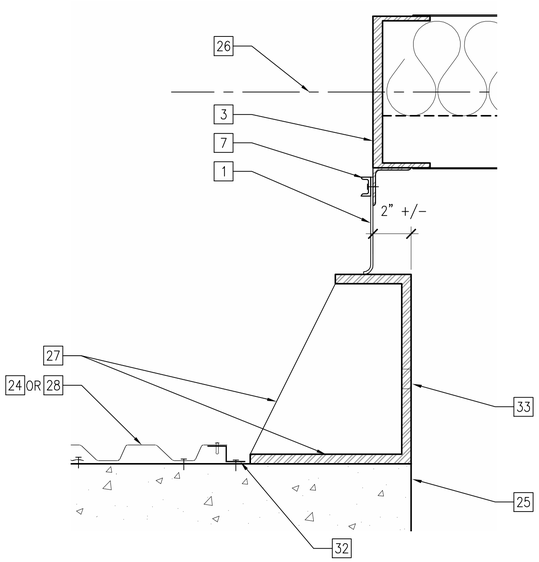

NOTE: REFER TO DETAIL A2/A-501 FOR ADDITIONAL INFORMATION

DOOR LEAF TO BUILDING DETAIL (C2)

SCALE: 3" = 1'-0" A-501

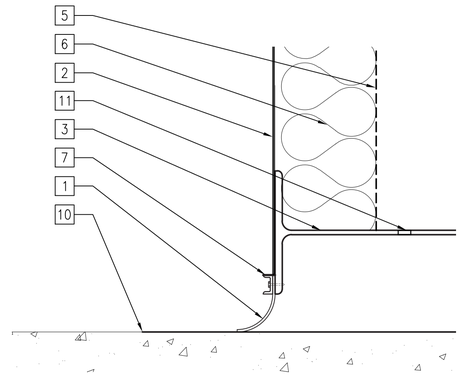

DOOR TO FLOOR DETAIL (C3)

SCALE: 3" = 1'-0" A-501

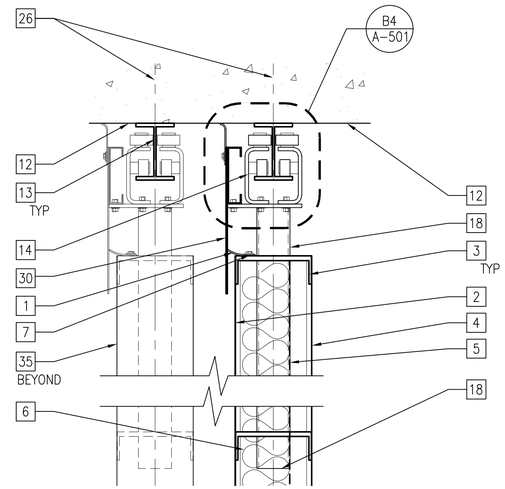

HANGAR DOOR HEAD DETAIL (C4)

SCALE: 1 1/2" = 1'-0" A-501

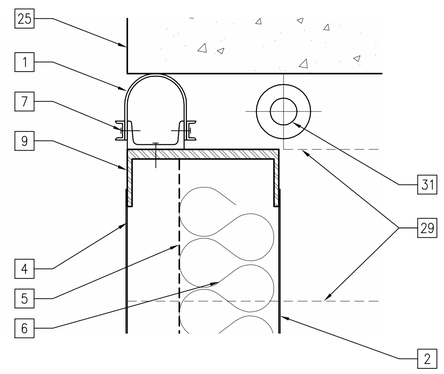

SWING PANEL CLOSURE TO BUILDING (B3)

SCALE: 3" = 1'-0" A-501

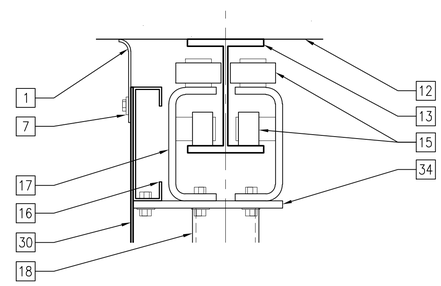

TOP GUIDE ASSEMBLY DETAIL (B4)

SCALE: 3" = 1'-0" A-501

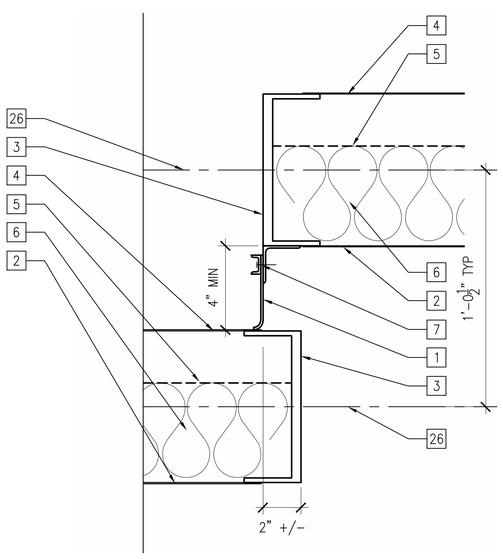

DOOR LEAF TO DOOR LEAF (A2)

SCALE: 3" = 1'-0" A-501

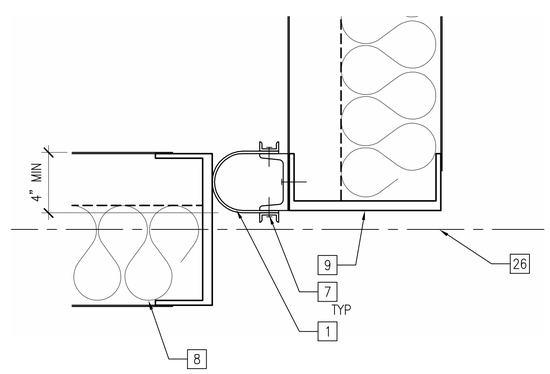

NOTE: REFER TO DETAIL B3/A-501 FOR ADDITIONAL INFORMATION

DOOR LEAF TO DOOR SIDE CLOSURE (A3)

SCALE: 3" = 1'-0" A-501

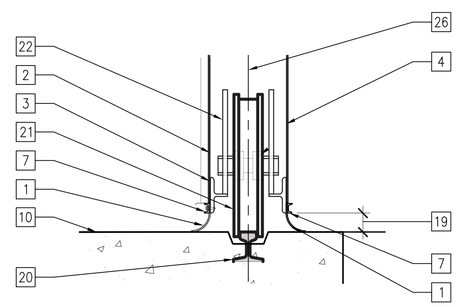

HANGAR DOOR BASE DETAIL (A4)

SCALE: 1 1/2" = 1'-0" A-501

16' 8' 0 16'

SCALE: 1-1/2"= 1'-0"

1' 6" 0 1'

SCALE: 3"= 1'-0"

GENERAL NOTES

1. REFER TO DRAWING G-003 FOR GENERAL NOTES.
2. PAINT EXPOSED EXTERIOR HANGAR DOOR STRUCTURAL FRAMING TO MATCH EXTERIOR METAL PANELS.
3. PAINT EXPOSED INTERIOR HANGAR DOOR STRUCTURAL FRAMING TO MATCH INTERIOR METAL PANELS.
4. REFER TO DRAWING A-502 FOR ADDITIONAL DETAILS.
5. IMPACTED AREAS BY REMOVAL OF EXISTING TOP TRACKS TO BE PATCHED AND REPAIRED BEFORE INSTALLATION OF NEW TOP TRACK.

KEY NOTES

1. WEATHER STRIPPING
2. PAINTED EXTERIOR METAL PANEL SECURED TO HANGAR DOOR FRAMING
3. HANGAR DOOR STRUCTURAL FRAMING, REFER TO STRUCTURAL
4. PAINTED INTERIOR METAL PANEL SECURED TO HANGAR DOOR STRUCTURAL FRAMING
5. VAPOR BARRIER
6. R 19 BATT INSULATION
7. WEATHER STRIP RETAINER BAR
8. HANGAR DOOR ASSEMBLY
9. HANGAR DOOR EDGE CLOSURE SWING PANEL
10. GRADE
11. WEEP HOLE @ 24" O.C.
12. EXISTING CONCRETE OVERHANG
13. TOP TRACK, SECURED TO UNDERSIDE OF EXISTING OVERHANG PER MANUFACTURER RECOMMENDATIONS
14. TOP GUIDE RAIL ASSEMBLY, REFER TO B4/A-501
15. HORIZONTAL AND VERTICAL GUIDE WHEEL
16. METAL CHANNEL SECURED TO METAL PLATE
17. METAL BRACKET SECURED TO METAL PLATE
18. FREE MOVING TUBE WITHIN AN OUTER TOP GUIDE TUBE
19. 2 INCH CLEAR BETWEEN BOTTOM OF DOOR FRAME AND TOP OF BOTTOM RAIL
20. INSET BOTTOM RAIL
21. TAPERED ROLLER BEARING
22. WHEEL POCKET
23. BOTTOM RAIL FOUNDATION
24. CORRUGATED METAL PANEL WHERE THE EXISTING PANEL IS IMPACTED BY HANGAR DOOR'S INSTALLATION TO BE REPAIRED WITH FULL SIZE PANEL TO MATCH EXISTING CORRUGATED METAL PANEL.
25. EXISTING BUILDING
26. HANGAR DOOR CENTER LINE
27. BUILT-UP METAL BRACKET HANGAR DOOR EDGE CLOSURE SECURED TO EXISTING BUILDING TO MATCH EXISTING, FINISH SHALL MATCH HANGAR DOOR
28. EXISTING CORRUGATED METAL PANEL
29. DASHED LINE INDICATES HANGAR DOOR EDGE SWING PANEL IN OPEN POSITION
30. HANGAR DOOR HEAD METAL FLASHING, MIN 16 GAUGE PAINTED TO MATCH HANGAR DOOR
31. SWING PANEL CLOSURE HINGE SYSTEM ANCHORED TO ADJACENT STRUCTURE
32. CORRUGATED METAL PANEL TRIM CLOSURE TO MATCH EXISTING
33. CONDUIT FOR SNOW MELTING SYSTEM, REFER TO ELECTRICAL. COORDINATE LOCATION WITH MANUFACTURER REQUIREMENTS
34. METAL PLATE SECURED TO FREE MOVING METAL TUBE
35. HANGAR DOOR LEAF BEYOND

SYM	DESCRIPTION	DATE	APPR

NAVFAC

ARCHITECT 12218 JOHNNIE E. HACKETT STATE OF MARYLAND 8·24·16 SEAL

JACOBS
1100 NORTH GLEBE ROAD SUITE 500
ARLINGTON, VIRGINIA 22201
TEL (571) 218-1000 FAX (571) 218-1600

A/E INFO

APPROVED

FOR COMMANDER NAVFAC

ACTIVITY ----

SATISFACTORY TO DATE

DES	AG	DRW	IT	CHK	AG

<<PM/DM>> ----

BRANCH MANAGER --

CHIEF ENG/ARCH ---

<<->> --

DEPARTMENT OF THE NAVY
NAVAL FACILITIES ENGINEERING COMMAND
THE NAVY YARD
NAVAL FACILITIES ENGINEERING COMMAND, WASHINGTON
WASHINGTON, D.C.
NAVAL AIR STATION - PAX RIVER
ST. MARY'S CO., MD.

HANGAR 111-HANGAR DOORS REPLACEMENT

HANGAR DOOR DETAILS

SCALE: AS NOTED

EPROJECT NO.: 1323946

CONSTR. CONTR. NO. -

NAVFAC DRAWING NO. 13083184

SHEET 18 OF 35

A-501

DRAWFORM REVISION: 10 MARCH 2009

FILE NAME: C:\pwworking\gbro\pwcsy\d0896254\BLDG111-1323946-A501.dwg LAYOUT NAME: Layout1 PLOTTED: Thursday, August 18, 2016 - 6:58pm USER: rcwcsy

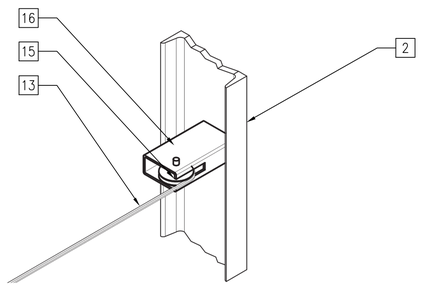

CABLE ANCHOR DETAIL (C2)
SCALE: NTS — A-502

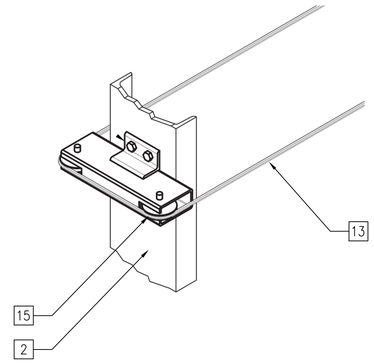

CABLE PULLEY DETAIL (C3)
SCALE: NTS — A-502

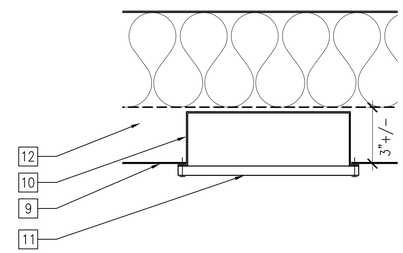

RECESSED EXIT SIGN DETAIL (C4)
SCALE: 3" = 1'-0" — A-502

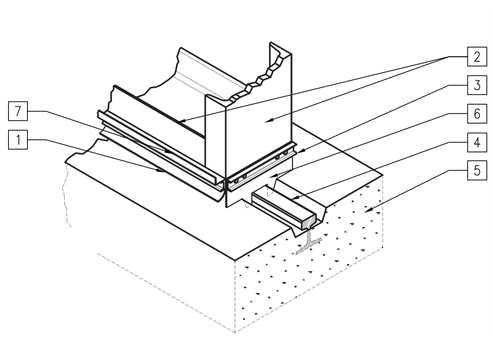

NOTE: REFER TO DETAIL B2/A-501 FOR ADDITIONAL INFORMATION

HANGAR DOOR CLEANER DETAIL (B2)
SCALE: NTS — A-502

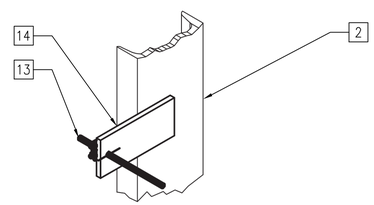

BUILDING ANCHOR DETAIL (B3)
SCALE: NTS — A-502

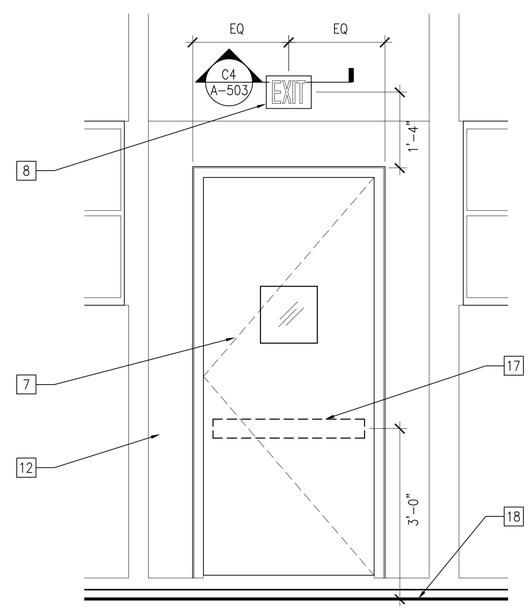

EGRESS DOOR ELEVATION (A4)
SCALE: 3/4" = 1'-0" — A-502

1' 6" 0 1'
SCALE: 3/4"= 1'-0"

1' 6" 0 1'
SCALE: 3"= 1'-0"

GENERAL NOTES

1. REFER TO DRAWING G-003 FOR GENERAL NOTES

KEY NOTES

1. WEATHER STRIPPING
2. HANGAR DOOR STRUCTURAL FRAMING, REFER TO STRUCTURAL
3. WEATHER STRIP RETAINER BAR
4. INSET BOTTOM RAIL
5. BOTTOM RAIL FOUNDATION
6. TRACK CLEANER
7. EGRESS DOOR
8. RECESSED EXIT LIGHT
9. HANGAR DOOR INTERIOR COVERING
10. RECESSED EXIT LIGHT BOX SECURED TO HANGAR DOOR INTERIOR COVERING. REINFORCE HANGAR DOOR INTERIOR COVERING EDGE OPENING AS NEEDED TO SUPPORT EXIT LIGHT
11. EXIT LIGHT COVER. COVER PROJECTION SHALL NOT INTRUDE OR OBSTRUCT HANGAR DOOR OPERATION
12. HANGAR DOOR
13. HANGAR DOOR CABLE SYSTEM
14. METAL BRACKET TO ANCHOR HANGAR DOOR CABLE SYSTEM SECURED TO HANGAR DOOR STRUCTURAL FRAMING PER MANUFACTURER REQUIREMENT
15. PULLEY PART OF HANGAR DOOR CABLE SYSTEM PER MANUFACTURER REQUIREMENT
16. METAL BRACKET TO SECURE PULLEY, PART OF HANGAR DOOR CABLE SYSTEM PER MANUFACTURER REQUIREMENT
17. PANIC HARDWARE
18. FINISH FLOOR / GRADE

SYM	DESCRIPTION	DATE	APPR

NAVFAC

ARCHITECT 12218 JOHNNIE E. HACKETT STATE OF MARYLAND 8·24·16 SEAL

JACOBS
1100 NORTH GLEBE ROAD SUITE 500
ARLINGTON, VIRGINIA 22201
TEL (571) 218-1000 FAX (571) 218-1600

A/E INFO

APPROVED
FOR COMMANDER NAVFAC
ACTIVITY

SATISFACTORY TO DATE
DES AG DRW IT CHK AG
<<PM/DM>> ----
BRANCH MANAGER --
CHIEF ENG/ARCH ---
<<-->> --

DEPARTMENT OF THE NAVY
NAVAL FACILITIES ENGINEERING COMMAND
THE NAVY YARD WASHINGTON, D.C.
NAVAL FACILITIES ENGINEERING COMMAND, WASHINGTON
NAVAL AIR STATION – PAX RIVER ST. MARY'S CO., MD.

HANGAR 111-HANGAR DOORS REPLACEMENT

HANGAR DOOR DETAILS

SCALE: AS NOTED
EPROJECT NO.: 1323946
CONSTR. CONTR. NO. –
NAVFAC DRAWING NO. 13083185
SHEET 19 OF 35

A-502

DRAWFORM REVISION: 10 MARCH 2009

FILE NAME: C:\pwworking\jdrn\nawssyi\d0896254\BLDG111-1323946-A502.dwg LAYOUT NAME: Layout1 PLOTTED: Thursday, August 18, 2016 - 6:58pm USER: nawssyi

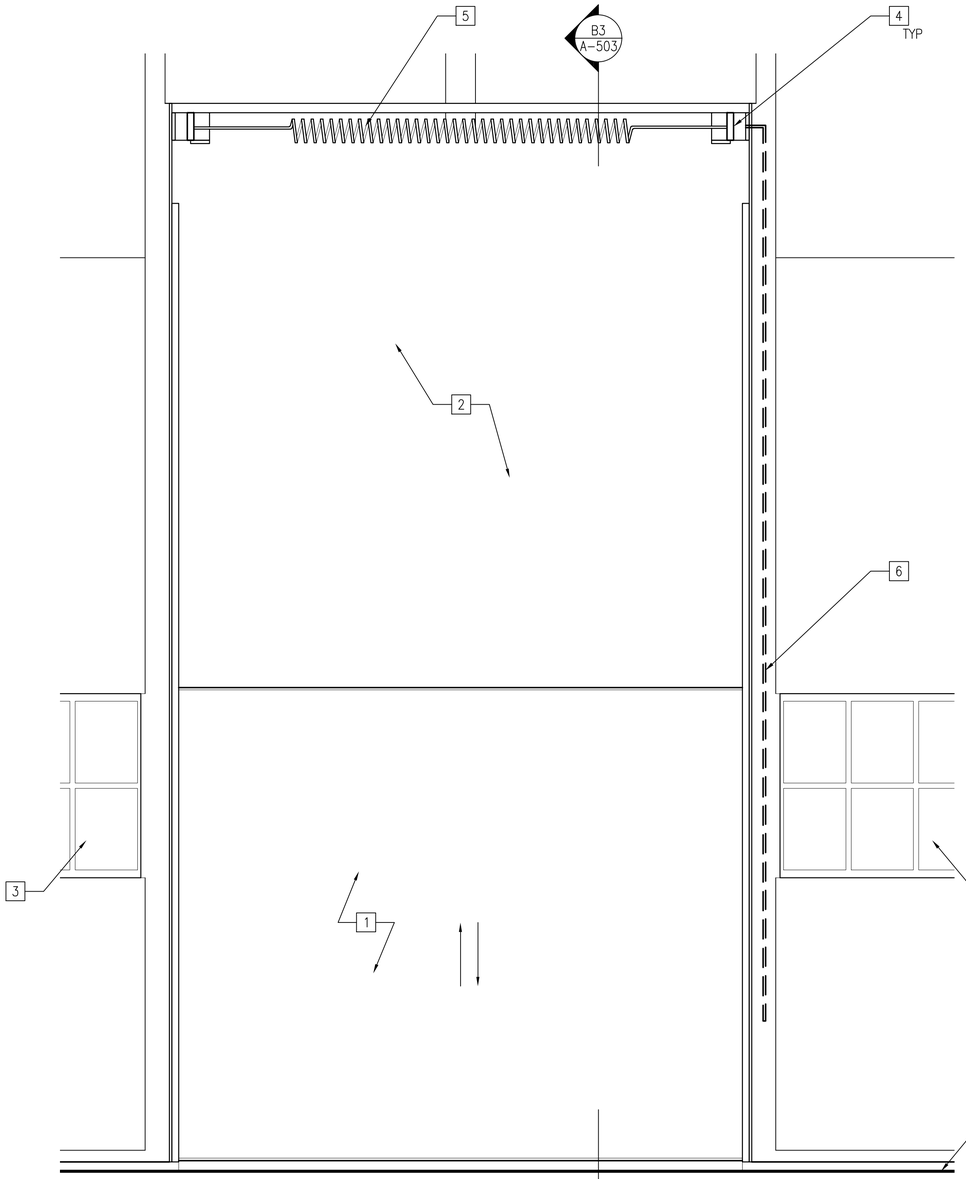

VERTICAL LIFT DOOR ELEVATION B1
SCALE: 3/4" = 1'-0" A-503

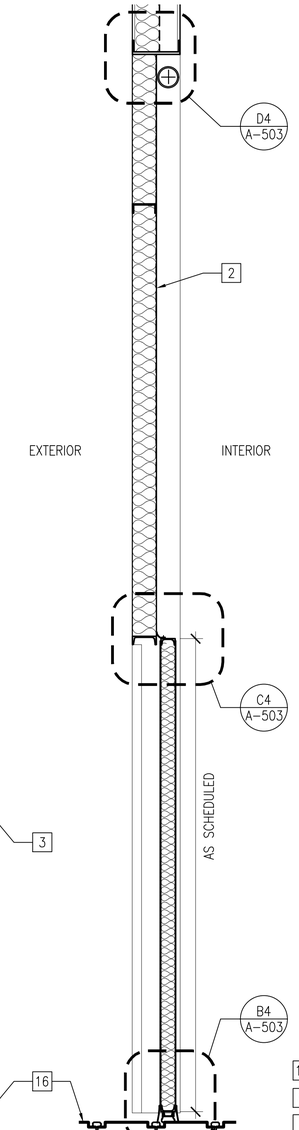

VERTICAL LIFT SECTION B3
SCALE: 3/4" = 1'-0" A-503

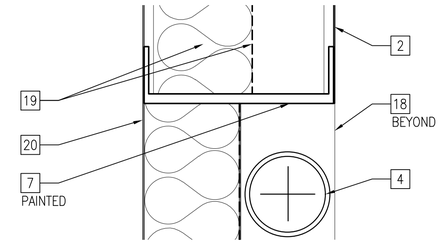

HANGAR DOOR DETAIL D4
SCALE: 3" = 1'-0" A-503

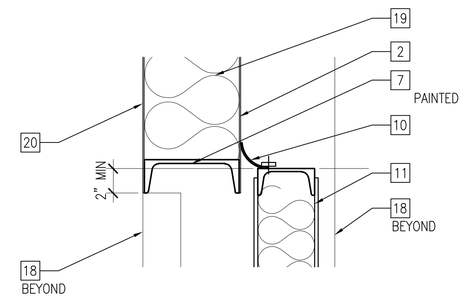

VERTICAL LIFT DOOR HEAD DETAIL C4
SCALE: 3" = 1'-0" A-503

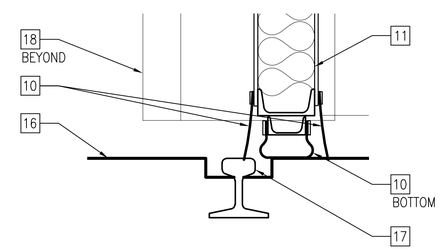

VERTICAL LIFT DOOR SILL DETAIL B4
SCALE: 3" = 1'-0" A-503

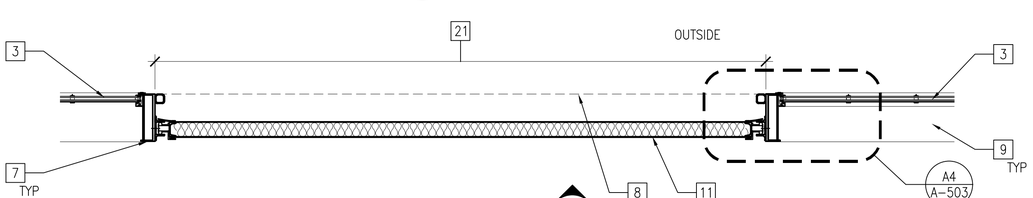

VERTICAL LIFT DOOR PLAN A1
SCALE: 3/4" = 1'-0" A-503

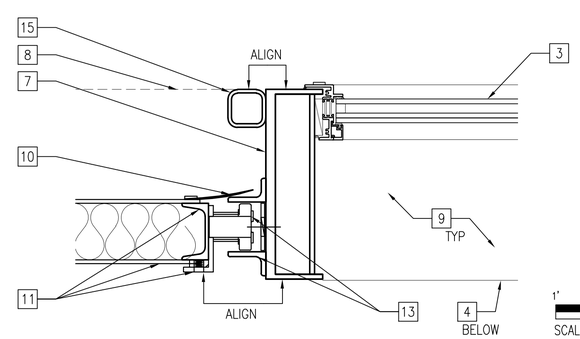

VERTICAL LIFT DOOR JAMB DETAIL A4
SCALE: 3" = 1'-0" A-503

1' 6" 0 1'
SCALE: 3/4"= 1'-0"

1' 6" 0 1'
SCALE: 3"= 1'-0"

GENERAL NOTES

1. REFER TO DRAWING G-003 FOR GENERAL NOTES
2. REFER TO DRAWING A-501 FOR ADDITIONAL INFORMATION ON HANGAR DOOR ASSEMBLY AND DETAILS
3. REFER TO DRAWING A-601 FOR ADDITIONAL INFORMATION ON WINDOW SYSTEM.
4. PROVIDE REMOVABLE INTERIOR PANEL IN THE VERTICAL LIFT DOOR FOR ACCESS TO DOOR HARDWARE PER MANUFACTURER REQUIREMENTS.
5. EXPOSED SURFACES OF VERTICAL LIFT DOOR COMPONENTS SHALL BE PAINTED TO MATCH ADJACENT FINISHED SURFACES, UNO.

KEY NOTES

1. MANUALLY OPERATED HEAVY DUTY INSULATED VERTICAL LIFT ACCESS DOOR ASSEMBLY WITHIN HANGAR DOOR LEAF (LEAF #3), TYP
2. PAINTED INTERIOR METAL PANEL COVERING SECURED TO HANGAR DOOR STRUCTURAL FRAMING
3. INSULATED WINDOW SYSTEM
4. SPRING HOUSING
5. COILING ROD
6. CONCEALED PULL DEVICE PER MANUFACTURER STANDARD
7. HANGAR DOOR STRUCTURAL FRAMING
8. DASHED LINE INDICATES EDGE OF HANGAR DOOR ABOVE
9. PAINTED WINDOW SILL
10. WEATHER SEAL
11. VERTICAL LIFT DOUBLE SKIN INSULATED DOOR LEAF ASSEMBLY. COVERING SHALL BE GAGE 13 MIN GALVANIZED STEEL FINISHED TO MATCH ADJACENT FINISH
12. METAL BRACKET SECURED TO HANGAR DOOR STRUCTURAL FRAMING
13. VERTICAL LIFT DOOR GUIDE SYSTEM PER MANUFACTURER SECURED TO METAL BRACKET
14. NOT USED
15. 2"X2" METAL TUBE SECURED TO ADJACENT METAL BRACKET, FINISHED TO MATCH ADJACENT FINISHED SURFACE
16. GRADE
17. HANGAR DOOR BOTTOM RAIL
18. HANGAR DOOR LEAF
19. BATT INSULATION WITH VAPOR BARRIER AT INTERIOR SIDE
20. PAINTED EXTERIOR METAL PANEL COVERING SECURED TO HANGAR DOOR STRUCTURAL FRAMING
21. CLEAR OPENING SHALL BE BASED ON TWO HORIZONTAL HANGAR DOOR LEAF MODULES REFER TO SHEETS A211 THROUGH A214

SYM	DESCRIPTION	DATE	APPR

NAVFAC

ARCHITECT 12218 JOHNNIE E. HACKETT STATE OF MARYLAND 8·24·16 SEAL

JACOBS
1100 NORTH GLEBE ROAD SUITE 500
ARLINGTON, VIRGINIA 22201
TEL (571) 210-1000 FAX (571) 210-1600
A/E INFO

APPROVED
FOR COMMANDER NAVFAC
ACTIVITY
SATISFACTORY TO DATE
DES AG DRW IT CHK AG
<<PM/DM>> ----
BRANCH MANAGER --
CHIEF ENG/ARCH ---
<<->> --

DEPARTMENT OF THE NAVY
NAVAL FACILITIES ENGINEERING COMMAND
THE NAVY YARD WASHINGTON, D.C.
NAVAL FACILITIES ENGINEERING COMMAND, WASHINGTON
NAVAL AIR STATION – PAX RIVER ST. MARY'S CO., MD.
HANGAR 111-HANGAR DOORS REPLACEMENT
VERTICAL LIFT DOOR

SCALE: AS NOTED
EPROJECT NO.: 1323946
CONSTR. CONTR. NO. –
NAVFAC DRAWING NO. 13083186
SHEET 20 OF 35
A-503

DRAWFORM REVISION: 10 MARCH 2009

FILE NAME: C:\pwworking\dbro\nawsysi\d0896254\BUD111-1323946-A503.dwg LAYOUT NAME: Layout1 PLOTTED: Thursday, August 18, 2016 - 6:59pm USER: nawsysi

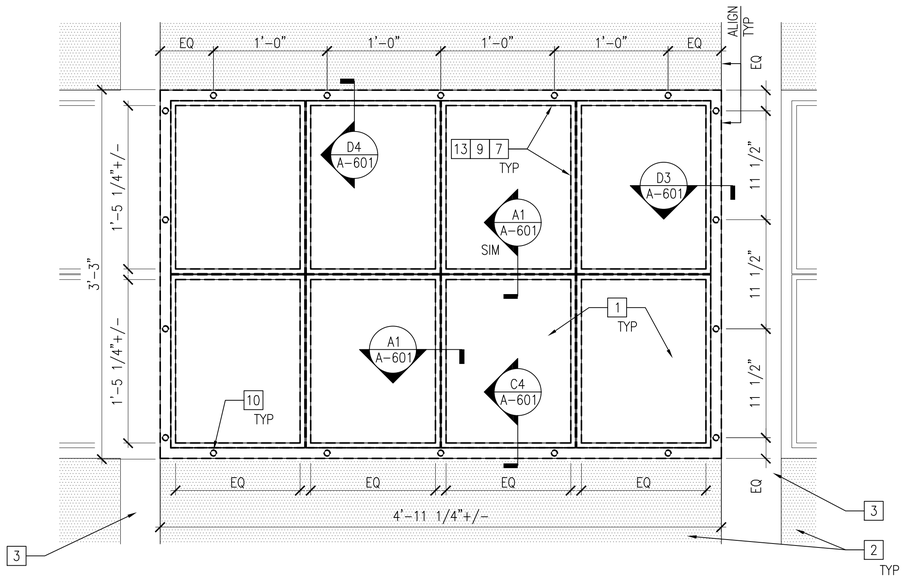

TYPICAL HISTORIC WINDOW - TYPE 1 (C2)

SCALE: 1 1/2" = 1'-0" A-601

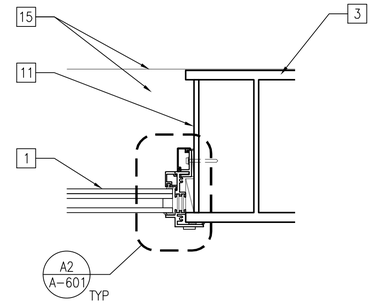

TYPICAL WINDOW JAMB DETAIL (D3)

SCALE: 3" = 1' A-601

NOTE: REFER TO DETAIL A2/A601 FOR ADDITIONAL INFORMATION

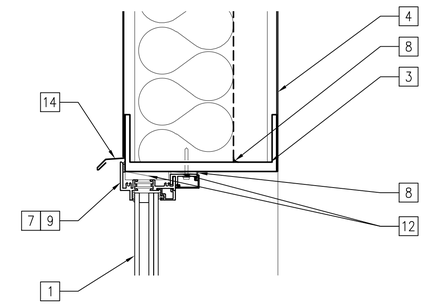

TYPICAL WINDOW HEAD DETAIL (D4)

SCALE: 3" = 1' A-601

NOTE: REFER TO DETAIL A2 & C4/A601 FOR ADDITIONAL INFORMATION

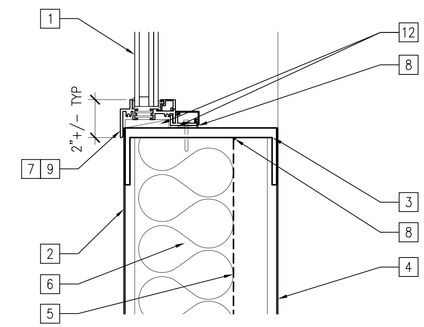

TYPICAL WINDOW SILL DETAIL (C4)

SCALE: 3" = 1' A-601

NOTE: REFER TO DETAIL A2/A601 FOR ADDITIONAL INFORMATION

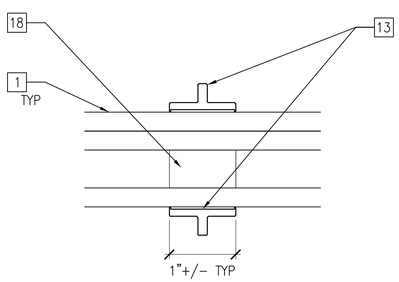

INTERMEDIATE MULLION DETAIL (A1)

SCALE: 1" = 1" A-601

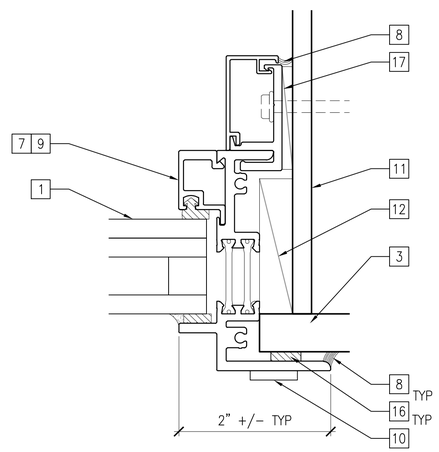

EDGE MULLION DETAIL (A2)

SCALE: 1" = 1" A-601

1" 1/2" 0 1"
SCALE: 1"= 1"

16' 8' 0 16'
SCALE: 1-1/2"= 1'-0"

1' 6" 0 1'
SCALE: 3"= 1'-0"

GENERAL NOTES

1. REFER TO DRAWING G-003 FOR GENERAL NOTES
2. HANGAR DOOR WINDOW SYSTEM IS HISTORIC AND PROTECTED BY SHIPO. DIMENSION AND LAYOUT ARE FROM A SURVEY.
3. WINDOW GLAZING SHALL BE SAFETY GLAZING.
4. REFER TO DRAWING AD-601 FOR HANGAR DOOR HISTORIC WINDOW DESIGN. MATCH THE HISTORIC WINDOW SIZE, LAYOUT AND FEATURES INCLUDING BUT NOT LIMITED TO MULLION PROFILE PROFILE SHAPE AND SIZE.

KEY NOTES

1. INSULATED GLAZING
2. EXTERIOR COVERING METAL PANEL SECURED TO HANGAR DOOR FRAMING
3. HANGAR DOOR STRUCTURAL FRAMING, REFER TO STRUCTURAL
4. INTERIOR COVERING METAL PANEL SECURED TO HANGAR DOOR STRUCTURAL FRAMING
5. VAPOR BARRIER
6. R 19 BATT INSULATION
7. WINDOW MULLION SYSTEM
8. SEALANT / SEALANT & BACKER ROD
9. METAL WINDOW PROJECTING EDGE FRAME, PROFILE SIMILAR TO HISTORIC WINDOW FRAME SYSTEM
10. FLAT HEAD SCREW
11. METAL PLATE SECURED TO STRUCTURAL FRAMING
12. BLOCKING
13. " T " SHAPE MUNTIN BAR MULLION SYSTEM, PROFILE SIMILAR TO HISTORIC WINDOW FRAME SYSTEM
14. FLASHING WITH EDGE DRIP, FINISH TO MATCH WINDOW MULLION FINISH
15. WINDOW SILL. FINISH SHALL MATCH HANGAR DOOR INTERIOR FINISH
16. NON CURING BUTYL SEALANT
17. WINDOW MULLION SEPARATOR
18. SHADOW BAR SPACER, COLOR SHALL BE BLACK

SYM	DESCRIPTION	DATE	APPR

NAVFAC

ARCHITECT 12218 JOHNNIE E. HACKETT STATE OF MARYLAND 8·24·16 SEAL

JACOBS
1100 NORTH GLEBE ROAD SUITE 500
ARLINGTON, VIRGINIA 22201
TEL (571) 218-1000 FAX (571) 218-1600

A/E INFO

APPROVED
FOR COMMANDER NAVFAC
ACTIVITY
SATISFACTORY TO DATE

DES	AC	DRW	IT	CHK	AC
<<PM/DM>>	----				
BRANCH MANAGER	--				
CHIEF ENG/ARCH	---				
<<--->>	--				

DEPARTMENT OF THE NAVY
NAVAL FACILITIES ENGINEERING COMMAND
NAVAL FACILITIES ENGINEERING COMMAND, WASHINGTON
WASHINGTON, D.C.
THE NAVY YARD
NAVAL AIR STATION – PAX RIVER
ST. MARY'S CO., MD.
HANGAR 111-HANGAR DOORS REPLACEMENT
WINDOW SCHEDULE AND DETAILS

SCALE: AS NOTED
EPROJECT NO.: 1323946
CONSTR. CONTR. NO. –
NAVFAC DRAWING NO. 13083187
SHEET 21 OF 35
A-601

DRAWFORM REVISION: 10 MARCH 2009

FILE NAME: C:\pwworking\gbna\nawasjy\d0896254\BLDG111-1323946-A601.dwg LAYOUT NAME: Layout1 PLOTTED: Thursday, August 18, 2016 - 6:59pm USER: nawasjy

DOOR SCHEDULE

DOOR NO.	ROOM NAME	DOOR TYPE	DOOR W	DOOR H	DOOR TH	DOOR MAT	FIRE RATING	FRAME TYPE	FRAME MAT	FRAME HEAD	FRAME JAMB	FRAME SILL	HDWR	REMARKS/NOTES
101	DOOR#1 (SW) LEAF 1	A	3'-0"	7'-0"	0'-1 15/16"	HM	–	F1	HM	2	3	1	1	NOTE 1, 2, 3 & 4
102	DOOR#1 (SW) LEAF 3	B	–	8'-7"	0'-3"	–	–	–	–	C4/ A-503	A4/ A-503	B4/ A-503	–	NOTE 1, 5 & 6
103	DOOR#1 (SW) LEAF 5	A	3'-0"	7'-0"	0'-1 15/16"	HM	–	F1	HM	2	3	1	1	NOTE 1, 2, 3 & 4
104	DOOR#2 (NW) LEAF 5	A	3'-0"	7'-0"	0'-1 15/16"	HM	–	F1	HM	2	3	1	1	NOTE 1, 2, 3 & 4
105	DOOR#2 (NW) LEAF 3	B	–	8'-7"	0'-3"	–	–	–	–	C4/ A-503	A4/ A-503	B4/ A-503	–	NOTE 1, 5 & 6
106	DOOR#2 (NW) LEAF 1	A	3'-0"	7'-0"	0'-1 15/16"	HM	–	F1	HM	2	3	1	1	NOTE 1, 2, 3 & 4
107	DOOR#3 (SE) LEAF 1	A	3'-0"	7'-0"	0'-1 15/16"	HM	–	F1	HM	2	3	1	1	NOTE 1, 2, 3 & 4
108	DOOR#3 (SE) LEAF 3	B	–	8'-7"	0'-3"	–	–	–	–	C4/ A-503	A4/ A-503	B4/ A-503	–	NOTE 1, 5 & 6
109	DOOR#3 (SE) LEAF 5	A	3'-0"	7'-0"	0'-1 15/16"	HM	–	F1	HM	2	3	1	1	NOTE 1, 2, 3 & 4
110	DOOR#4 (NE) LEAF 5	A	3'-0"	7'-0"	0'-1 15/16"	HM	–	F1	HM	2	3	1	1	NOTE 1, 2, 3 & 4
111	DOOR#4 (NE) LEAF 3	B	–	8'-7"	0'-3"	–	–	–	–	C4/ A-503	A4/ A-503	B4/ A-503	–	NOTE 1, 5 & 6
112	DOOR#4 (NE) LEAF 1	A	3'-0"	7'-0"	0'-1 15/16"	HM	–	F1	HM	2	3	1	1	NOTE 1, 2, 3 & 4

DOOR FRAME DETAILS

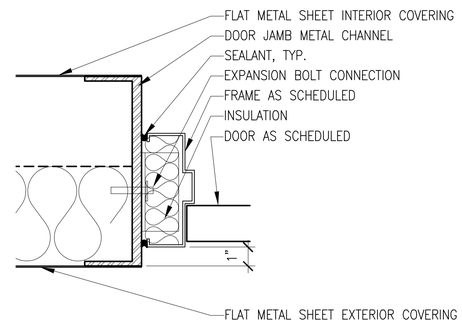

JAMB 3 A-603

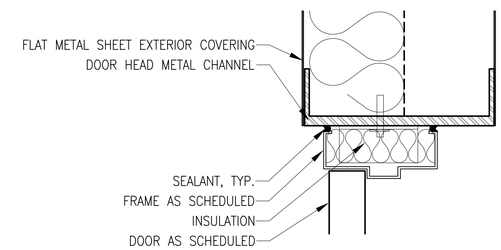

HEAD 2 A-603

NOTE: REFER TO DETAIL 3/A603 FOR ADDITIONAL INFORMATION

THRESHOLD DETAILS

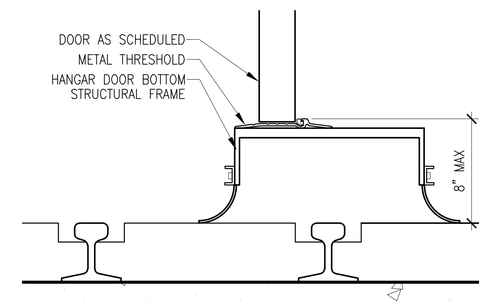

SILL DETAIL 1 A-603

NOTE: REFER TO DETAIL A4/A501 FOR ADDITIONAL INFORMATION

DOOR AND HARDWARE NOTES

1. DOOR SHALL BE SECURED FROM INSIDE
2. EGRESS DOOR
3. EXIT LIGHT
4. PANIC HARDWARE
5. VERTICAL LIFT DOOR, REFER TO DRAWING A-503 FOR ADDITIONAL INFORMATION
6. VERTICAL LIFT DOOR CLEAR WIDTH SHALL BE THE SPAN OF THE TWO MIDDLE MODULES WITHIN THE HANGAR DOOR LEAF

GENERAL NOTES

1. REFER TO DRAWING G-003 FOR GENERAL NOTES, ABBREVIATIONS, SYMBOLS, ETC.
2. REFER TO PLAN FOR LEFT OR RIGHT ORIENTATION.
3. DOORS AND DOOR FRAMES SHALL BE INSULATED

KEY NOTES

1 12" X 12" INSULATED SAFETY VISION GLASS TO MATCH HISTORICAL WINDOW INSIDE OF HANGAR DOOR

DOOR TYPES

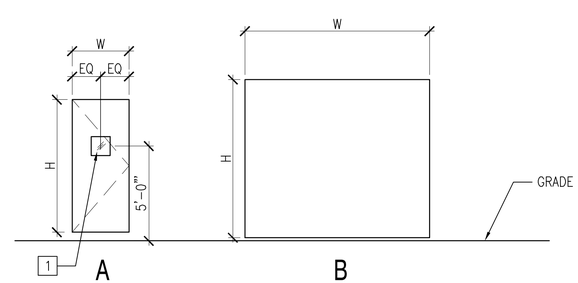

FRAME TYPES

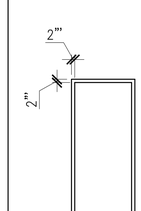

APPR	DATE	DESCRIPTION	SYM

NAVFAC

ARCHITECT 12218 JOHNNIE E. HACKETT STATE OF MARYLAND 8·24·16 SEAL

JACOBS
1100 NORTH GLEBE ROAD SUITE 500
ARLINGTON, VIRGINIA 22201
TEL (571) 218-1000 FAX (571) 218-1600
A/E INFO

APPROVED
FOR COMMANDER NAVFAC
ACTIVITY
SATISFACTORY TO DATE
DES AG DRW IT CHK AG
<<PM/DM>> ----
BRANCH MANAGER --
CHIEF ENG/ARCH ---
<<--->> --

DEPARTMENT OF THE NAVY
NAVAL FACILITIES ENGINEERING COMMAND
THE NAVY YARD WASHINGTON, D.C.
NAVAL FACILITIES ENGINEERING COMMAND WASHINGTON
NAVAL AIR STATION – PAX RIVER ST. MARY'S CO., MD.
HANGAR 111-HANGAR DOORS REPLACEMENT
DOOR TYPES AND SCHEDULE

SCALE: NA
EPROJECT NO.: 1323946
CONSTR. CONTR. NO. –
NAVFAC DRAWING NO. 13083188
SHEET 22 OF 35
A-603

DRAWFORM REVISION: 10 MARCH 2009

FILE NAME: C:\pwworking\jacos\\d0896254\BLDG111-1323946-A603.dwg LAYOUT NAME: Layout1 PLOTTED: Thursday, August 18, 2016 - 6:59pm USER: nawsyj

STRUCTURAL GENERAL NOTES

GENERAL

1. THIS PROJECT IS TO REPLACE THE DOORS AND TRACK SYSTEMS AT HANGAR 111. REPAIR OF THE HANGAR DOOR OVERHANG SLABS IS ALSO REQUIRED.
2. REVIEW AND VERIFY AS-BUILT CONDITIONS, EQUIPMENT AND DOOR PANEL DIMENSIONS USING CERTIFIED VENDOR DRAWINGS PRIOR TO SUBMISSION OF SHOP DRAWINGS AND ANY FABRICATION.
3. DIMENSIONS AND LOCATIONS OF EXISTING CONDITIONS SHOWN ON THE DRAWINGS ARE APPROXIMATE. VERIFY ACTUAL CONDITIONS BY FIELD MEASUREMENTS PRIOR TO DOOR FABRICATION AND TRACK CONSTRUCTION.
4. ELEVATIONS INDICATED ON THE DRAWINGS ARE BASED ON NORTH AMERICAN VERTICAL DATUM (NAVD 1988). AFTER DEMOLITION OF EXISTING, RECONSTRUCT BOTTOM RAILS AS INDICATED ON THE DRAWINGS. DURING INSTALLATION OF THE SNOW MELT SLAB AND TRANSITION OVERLAY ADJACENT TO THE BOTTOM RAILS, PROVIDE POSITIVE DRAINAGE AWAY FROM THE RAILS BY GRADUALLY SLOPING THE CONCRETE. AVOID AN ABRUPT GRADE CHANGE OR HUMP AT THE RAILS AS THIS WILL IMPEDE AIRCRAFT ACCESS TO THE HANGAR. TOP OF RAIL ELEVATIONS INDICATED ON THE DRAWINGS ARE BASED ON PRELIMINARY SURVEY DATA. FIELD VERIFY ELEVATIONS BY INDEPENDENT SURVEY PRIOR TO CONSTRUCTION AND ADVISE THE COR ACCORDINGLY DURING A FORMAL PRECONSTRUCTION MEETING.
5. ENSURE STORAGE, HANDLING, PREPARATION AND INSTALLATION OF MATERIALS ARE IN ACCORDANCE WITH DOOR MANUFACTURER'S PRINTED RECOMMENDATIONS AND INSTRUCTIONS UNLESS OTHERWISE NOTED ON THE DRAWINGS OR SPECIFICATIONS.
6. TAKE SPECIAL CARE TO CONTROL FOREIGN OBJECT DEBRIS (FOD) THAT COULD BE DETRIMENTAL TO AIRCRAFT ENGINES.
7. COORDINATE DEMOLITION OF EACH EXISTING DOOR PANEL AND TRACK SYSTEM WITH THE GOVERNMENT. IMMEDIATELY INSTALL THE TEMPORARY CURTAIN SYSTEM INDICATED ON THE DRAWINGS AFTER REMOVAL OF EACH DOOR SYSTEM. TAKE SPECIAL CARE TO AVOID DAMAGING REINFORCING BARS IN THE EXISTING STRUCTURE DURING INSTALLATION OF CONCRETE ANCHORS SUPPORTING THE TEMPORARY CURTAIN WALL.

DESIGN CODES AND STANDARDS

1. UFC 3-301-01 STRUCTURAL ENGINEERING, DATED 1 JUNE 2013, WITH CHANGE 1 DATED 15 MAY 2014.
2. 2012 INTERNATIONAL BUILDING CODE (IBC).
3. AMERICAN CONCRETE INSTITUTE'S (ACI) "BUILDING CODE REQUIREMENTS FOR STRUCTURAL CONCRETE" 318-11.
4. AMERICAN INSTITUTE OF STEEL CONSTRUCTION, 14TH EDITION.
5. AMERICAN WELDING SOCIETY 2015 STRUCTURAL WELDING CODE (AWS D1.1).
6. ASCE 7-10: MINIMUM DESIGN LOADS FOR BUILDINGS AND OTHER STRUCTURES.
7. SEE SPECIFICATION SECTION 08 34 16.10 "STEEL SLIDING HANGAR DOORS" FOR ADDITIONAL DESIGN CRITERIA.

DESIGN LOADS

1. RISK CATEGORY (FOR DETERMINATION OF LOADING PARAMETERS) II
2. WIND LOAD PARAMETERS:

BASIC WIND SPEED	115 MPH
WIND IMPORTANCE FACTOR	1.0
EXPOSURE	D
ENCLOSURE CLASSIFICATION	PARTIALLY ENCLOSED
WIND SPEED SERVICEABILITY CHECK	76 MPH (10-YEAR RECURRENCE)

3. SEISMIC LOAD PARAMETERS:

Ss	0.106
S1	0.048
SDS	0.113
SD1	0.077
SITE CLASS (ASSUMED)	D
IMPORTANCE FACTOR	1.0
SEISMIC DESIGN CATEGORY	B

CONCRETE

1. CONCRETE DESIGN CONFORMS TO "BUILDING CODE REQUIREMENTS FOR REINFORCED CONCRETE", AMERICAN CONCRETE INSTITUTE (ACI) 318.
2. EXPOSURE CATEGORIES AND CLASSES – DESIGN OF CONCRETE AT THE BOTTOM RAILS IS BASED ON THE FOLLOWING PER ACI 318 TABLE 4.2.1:
   A. FREEZING AND THAWING CATEGORY F1 – CONCRETE EXPOSED TO FREEZING AND THAWING CYCLES AND OCCASIONAL EXPOSURE TO MOISTURE
   B. SULFATE CATEGORY S0 – WATER SOLUBLE SULFATE CONCENTRATION IN CONTACT WITH CONCRETE IS LOW
   C. PERMEABILITY CATEGORY P0 – NO SPECIFIC REQUIREMENT
   D. CORROSION PROTECTION OF REINFORCEMENT CATEGORY C2 – CONCRETE EXPOSED TO EXTERNAL SOURCE OF CHLORIDES FROM BRACKISH WATER OR SEAWATER SPRAY.
3. CONCRETE MIXTURE REQUIREMENTS BASED ON EXPOSURE CONDITIONS DESCRIBED ABOVE PER ACI 318 TABLE 4.3.1.1
   A. MINIMUM 28-DAY COMPRESSIVE STRENGTH (f'c): 5000 PSI
   B. MAXIMUM WATER TO CEMENTITIOUS RATIO: 0.40
   C. MAXIMUM WATER-SOLUBLE CHLORIDE ION CONTENT IN CONCRETE, PERCENT BY WEIGHT OF CEMENT: 0.15
   D. AIR CONTENT: 6% +/- 1%
4. DETAILING OF CONCRETE REINFORCEMENT BARS AND ACCESSORIES SHALL CONFORM TO THE RECOMMENDATIONS OF ACI 315 "DETAILS AND DETAILING OF CONCRETE REINFORCEMENT" AND ACI SP-66 "DETAILING MANUAL". PLACING OF REINFORCING BARS SHALL CONFORM TO THE RECOMMENDATIONS OF ACI 315R "MANUAL OF ENGINEERING AND PLACING DRAWINGS FOR REINFORCED CONCRETE STRUCTURES" AND CRSI "MANUAL OF STANDARD PRACTICE".
5. MIXING, TRANSPORTING, AND PLACING OF CONCRETE SHALL CONFORM TO ACI 301.
6. PROVIDE CONCRETE PROTECTION FOR REINFORCEMENT AS FOLLOWS:
   A. CAST AGAINST AND PERMENANTLY EXPOSED TO EARTH: 3 IN
   B. EXPOSED TO EARTH OR WEATHER WHERE FORMS ARE USED:
      NO. 6 BAR AND LARGER 2 IN
      NO. 5 BAR AND SMALLER 1 ½ IN
7. CONCRETE REINFORCEMENT BARS SHALL BE ASTM A 615, GRADE 60, DEFORMED.
8. PROVIDE TENSION DEVELOPMENT LENGTH (Ld) AND CLASS B LAP SPLICE LENGTHS AS FOLLOWS UNLESS OTHERWISE NOTED.

BAR SIZE (IN)	Ld (IN)	SPLICE LENGTH (IN)
3	17	22
4	22	29
5	28	36
6	33	43
7	48	63
8	55	72
9	62	81
10	70	91
11	78	101

9. FOR SURFACES TO BE BONDED BETWEEN NEW AND HARDENED CONCRETE, ROUGHEN HARDENED CONCRETED SURFACES TO THE AMPLITUDE INDICATED AND PROVIDE BONDING AGENT PRIOR TO PLACING NEW CONCRETE. BOTH ROUGHENING AND BONDING AGENT ARE REQUIRED.
10. CONTROL OF RANDOM CRACKING OF SLAB AT THE SNOW MELT SYSTEM AND THE INFILL CONCRETE BETWEEN THE DOOR RAILS IS IMPORTANT. PROVIDE A CONCRETE MIXTURE WITH WELL GRADED, BLENDED AGGREGATES; SHRINKAGE REDUCING ADMIXTURE; AND SUPPLEMENTARY CEMETITIOUS MATERIALS SUCH AS FLY ASH AND SLAG TO MINIMIZE SHRINKAGE POTENTIAL TO THE EXTENT PRACTICAL WHILE MAINTAINING STRENGTH AND DURABILITY REQUIREMENTS INDICATED ABOVE. MOIST CURE FOR SEVEN DAYS. SUBMIT THE MIXTURE DESIGN AT LEAST 30-DAYS PRIOR TO CONSTRUCTION FOR APPROVAL.
11. INCLUDE A LINE ITEM IN THE BASE BID TO ROUTE AND SEAL UP TO 100 LINEAR FEET OF RANDOM SHRINKAGE CRACKS IN THE CONCRETE AT THE RAILS AND AT THE SNOW MELT SLAB AT EACH HANGAR DOOR (400 LINEAR FEET TOTAL). INCLUDE A UNIT PRICE FOR EACH 50 LINEAR FEET ADDITIONAL. THIS IS INTENDED TO ADDRESS RANDOM SHRINKAGE CRACKING THAT MAY OCCUR IN THE ON-GROUND SLAB AFTER PLACEMENT AND IS SEPARATE FROM THE DOOR OVERHANG REPAIR WORK.

STRUCTURAL STEEL

1. STRUCTURAL STEEL DETAILING, FABRICATION AND ERECTION SHALL CONFORM TO THE AISC "SPECIFICATION FOR STRUCTURAL STEEL BUILDINGS" FOURTEENTH EDITION AND THE AISC "CODE OF STANDARD PRACTICE FOR STEEL BUILDINGS AND BRIDGES".
2. MATERIALS SHALL CONFORM TO THE STANDARDS LISTED:
   W-SHAPES: ASTM A992
   PLATES, ANGLES AND CHANNELS: ASTM A36
   COLD-FORMED HSS: ASTM A500 GRADE B
   ANCHOR RODS: ASTM F1554, GRADE 36
   STRUCTURAL BOLTS: ASTM A325
3. WELDING SHALL CONFORM TO THE AMERICAN WELDING SOCIETY STANDARD D1.1. ELECTRODES FOR SHOP AND FIELD WELDS SHALL CONFORM TO AWS, CLASS E70XX, LOW HYDROGEN.
4. PROVIDE WELDED JOINTS THAT MEET THE REQUIREMENTS FOR A PREQUALIFIED DESIGNATION. PROVIDE COMPLETE PENETRATION WELDS FOR BUTT AND GROOVE WELDS. FILLET WELDS SHALL BE A MINIMUM SIZE OF 3/16" AND CONTINUOUS UNLESS OTHERWISE SHOWN BY THE WELD SYMBOL. REMOVE RUN ON AND RUN OFF TABS.
5. SPLICING OF STRUCTURAL STEEL MEMBERS WHERE NOT DETAILED ON THE DOOR MANUFACTURER'S APPROVED SHOP DRAWINGS IS PROHIBITED WITHOUT THE PRIOR APPROVAL OF THE COR AS TO LOCATION, TYPE OF SPLICE AND CONNECTION TO BE MADE.
6. PENETRATIONS SHALL NOT BE CUT IN STRUCTURAL STEEL MEMBERS UNLESS SO INDICATED IN THE DRAWINGS OR AS APPROVED BY THE COR.
7. STEEL MEMBERS AND CONNECTIONS, INCLUDING THE INNER AND OUTER SHEET PANELS OF THE DOORS, SHALL BE HOT DIP GALVANIZED. STEEL MEMBERS, FABRICATIONS AND ASSEMBLIES INDICATED ON THE DRAWINGS SHALL BE GALVANIZED AFTER FABRICATION BY HOT DIP PROCESS IN ACCORDANCE WITH ASTM A123. WEIGHT OF ZINC COATING TO CONFORM TO THE REQUIREMENTS SPECIFIED UNDER "WEIGHT OF COATING" IN ASTM A123 OR ASTM A386, AS APPLICABLE.
8. PROVIDE 3/8" MINIMUM GUSSET PLATE THICKNESS, UNLESS OTHERWISE NOTED.

HANGAR DOOR SYSTEM

1. PROVIDE A COMPLETE MOTORIZED BOTTOM RUNNING STEEL FRAMED HANGAR DOOR SYSTEM DESIGNED BY THE DOOR MANUFACTURER'S DESIGNATED ENGINEER. DESIGN THE DOOR SYSTEM IN ACCORDANCE WITH THE CODES AND STANDARDS INDICATED.
2. THE HANGAR IS CONSIDERED HISTORICALLY SIGNIFICANT AND THE EXPECTATION IS THAT THE DOORS WILL CLOSELY RESEMBLE THE APPEARANCE OF THE ORIGINAL DOORS. AS SUCH, CLOSELY COORDINATE DOOR STRUCTURE WITH ARCHITECTURAL WINDOW AND DOOR OPENINGS.
3. WORK THESE GENERAL NOTES WITH THE SPECIFICATIONS AS A WHOLE. PAY SPECIAL ATTENTION TO THE REQUIREMENTS IN SPECIFICATION SECTION 08 34 16.10 "STEEL SLIDING HANGAR DOORS".
4. CONFORM TO THE FOLLOWING CRITERIA BUT NOT LESS THAN THE DOOR MANUFACTURER'S CRITERIA:
   A. TOP GUIDES: MAINTAIN NOMINAL ELEVATION WITHIN PLUS OR MINUS 1/4-INCH AND NOMINAL CENTER TO CENTER DIMENSIONS WITHIN PLUS OR MINUS 1/8-INCH IN 20 FEET. JOINTS OF HEAD GUIDES ARE NOT REQUIRED TO BE WELDED, BUT SHIM AND GRIND SO ADJOINING GUIDE SURFACES ARE NOT OUT OF LINE MORE THAN 1/16-INCH.
   B. HANGING HEAD FLASHING: GALVANIZE STEEL, NOT LIGHTER THAN 18 GAGE, REINFORCE AS REQUIRED. SHOW EXACT LOCATION AND CONFIGURATION ON TOP GUIDE SHOP DRAWINGS. TOP GUIDE AND HEAD FLASHING SYSTEM SHALL BE SHOP ASSEMBLED TO VERIFY ACCURACY OF FIT AND FASTENER LOCATION, AND DISASSEMBLED FOR SHIPPING. INSTALL HEAD FLASHING AFTER DOORS ARE IN PLACE.
   C. BOTTOM RAILS: STANDARD ASCE RAILS AS INDICATED ON THE DRAWINGS. DO NOT INSTALL RAILS UNTIL TOP GUIDE SYSTEM HAS BEEN INSTALLED. ANCHOR RAILS AS INDICATED. SET RAILS TO ELEVATION WITHIN PLUS OR MINUS 1/4-INCH, WITH VARIATIONS FROM ELEVATION NO GREATER RATE THAN 1/8-INCH IN 20 FEET. NOMINAL DESIGN RELATIONSHIP BETWEEN TOP GUIDES AND BOTTOM RAILS TO BE MAINTAINED WITHOUT EXCEPTION. CENTER TO CENTER DIMENSIONS OF BOTTOM RAILS TO BE MAINTAINED WITHIN PLUS OR MINUS ⅛-INCH WITH VARIATION FROM NOMINAL NO GREATER THAN 1/8-INCH IN 20 FEET. WELD RAIL JOINTS AND GRIND SMOOTH OR PROVIDE WITH SPLICE PLATE IN ACCORDANCE WITH ASCE STANDARDS.
5. CONSTRUCT THE DOOR SYSTEM IN STRICT ACCORDANCE WITH MANUFACTURER'S INSTALLATION INSTRUCTIONS. PAY PARTICULAR ATTENTION TO BOTTOM RAIL AND TOP GUIDE INSTALLATION TO ENSURE THEY MEET MANUFACTURER TOLERANCE REQUIREMENTS.
6. PROVIDE AN ELECTRIC SNOW MELT SYSTEM AT THE BOTTOM RAILS AND EXTENDING 5'-0" OUTBOARD OF THE RAILS. SEE ELECTRICAL FOR MORE INFORMATION.

INSPECTIONS

1. THE CONTRACTOR SHALL RETAIN A THIRD PARTY SPECIAL INSPECTION FIRM TO PROVIDE THE FOLLOWING INSPECTIONS IN ACCORDANCE WITH IBC CHAPTER 17:
   A. PERIODIC INSPECTION OF REINFORCING BARS AND SUPPORTS AT BOTTOM RAIL SYSTEM
   B. VERIFICATION OF TOP OF RAIL ELEVATIONS PRIOR TO CONCRETING
   C. CONTINUOUS INSPECTION DURING CONCRETE PLACEMENT.
   D. PERIODIC INSPECTION OF REPAIR WORK AT HANGAR DOOR OVERHANG SLABS.

POST-INSTALLED ANCHORS

1. ANCHOR RODS FOR ADHESIVE ANCHORS SHALL BE A36 OR A307 THREADED RODS INSTALLED WITH HILTI HIT ADHESIVE ANCHORING SYSTEM OR APPROVED EQUAL. SEE DRAWINGS FOR ANCHOR DIAMETER AND EMBEDMENT DEPTH.
2. USE HILTI HIT HY200 ADHESIVE ANCHORS (UNLESS OTHERWISE NOTED) OR APPROVED EQUAL.
3. INSTALL ANCHORS TO EMBEDMENT DEPTH PER MANUFACTURER'S RECOMMENDATIONS UNLESS OTHERWISE NOTED ON THE DRAWINGS.
4. DO NOT DRILL THROUGH EXISTING REINFORCING STEEL. LOCATE EXISTING REBAR AND ADJUST LOCATIONS OF ANCHORS TO CLEAR EXISTING REBAR.
5. COMPLETELY FILL ABANDONED HOLES WITH LOW SHRINKAGE GROUT OR APPROVED EQUAL.

DEMOLITION NOTES

1. REMOVE EXISTING CONSTRUCTION AS SHOWN ON THE DRAWINGS.
2. IMMEDIATELY NOTIFY THE COR IF UNUSUAL CONDITIONS ARE ENCOUNTERED.
3. SAW CUT EDGES OF DEMOLISHED SLAB AREAS TO ACHIEVE A SQUARE SHOULDERED EDGE. DO NOT CUT BEYOND BOUNDARIES OF INTENDED OPENINGS OR DEMOLITIONS LINES.

STRUCTURAL EARTHWORK AT SNOW MELT SLABS

1. ENSURE THE SLABS BEAR ON SOIL COMPACTED TO NOT LESS THAN 95% OF MAXIMUM DENSITY AS DETERMINED BY THE STANDARD PROCTOR COMPACTION TEST (ASTM D698).
2. ENSURE THE CONTRACTOR'S TESTING AGENCY VERIFIES THE REQUIRED BEARING CONDITION FOR EACH SLAB BEFORE THEY ARE PLACED.
3. NOTIFY THE COR IMMEDIATELY IF UNUSUAL SOIL CONDITIONS ARE ENCOUNTERED.
4. PROTECT EXISTING STRUCTURES, UTILITIES, PROPERTY, ETC. RESTORE ALL ITEMS DAMAGED, AS REQUIRED BY THE COR, AT NO COST TO THE GOVERNMENT.

STRUCTURAL ABBREVIATIONS

A	
ACL	AMERICAN CONCRETE INSTITUTE
ADDL	ADDITIONAL
B	
BLDG	BUILDING
BRCG	BRACING
BTWN	BETWEEN
C	
CJ	CONSTRUCTION JOINT
CL	CENTER LINE
CONN	CONNECTION
COR	CONTRACTING OFFICER REPRESENTATIVE
D	
DIA	DIAMETER
E	
EE	EACH END
EF	EACH FACE
EJ	EXPANSION JOINT
EL	ELEVATION
EQ	EQUAL
EX	EXISTING
EXP	EXPANSION
EW	EACH WAY
F	
FDN	FOUNDATION
FTG	FOOTING
G	
GALV	GALVANIZED

STRUCTURAL ABBREVIATIONS (CONTINUED)

H	
HCA	HEADED CONCRETE ANCHORS
I	
IF	INSIDE FACE
K	
KB	KNEE BRACE
L	
LG	LONG
LLH	LONG LEG HORIZONTAL
LLV	LONG LEG VERTICAL
LL	LIVE LOAD
LP	LOW POINT
LSH	LONG SIDE HORIZONTAL
LWC	LIGHT WEIGHT CONCRETE
Ld	REINFORCEMENT DEVELOPMENT LENGTH
N	
NE	NORTHEAST
NF	NEAR FACE
NIC	NOT IN CONTRACT
NW	NORTHWEST
O	
OH	OPPOSITE HAND
OF	OUTSIDE FACE
OVS	OVERSIZED
P	
PC	PIECE
PJF	PREFORMED JOINT FILLER
PL	PLATE
PREP	PREPARE
PROJ	PROJECTION
PVC	POLYVINYL CHLORIDE
R	
REINF	REINFORCEMENT
S	
SE	SOUTHEAST
SOG	SLAB ON GROUND
SPA	SPACE
SW	SOUTHWEST
T	
T&B	TOP AND BOTTOM
TBD	TO BE DETERMINED
TEMP	TEMPORARY
THD	THREAD
TOC	TOP OF CONCRETE
TOF	TOP OF FOOTING
TOS	TOP OF STEEL
TYP	TYPICAL
U	
UON	UNLESS OTHERWISE NOTED
V	
VIF	VERIFY IN FIELD
W	
W/	WITH
WWF	WELDED WIRE FABRIC

SYM	DESCRIPTION	DATE	APPR

NAVFAC

COMMONWEALTH OF VIRGINIA
JAMES HARRIS LOPER
Lic. No. 0402050404
8/29/2016
PROFESSIONAL ENGINEER
SEAL

JACOBS
1100 NORTH GLEBE ROAD SUITE 500
ARLINGTON, VIRGINIA 22201
TEL (571) 218-1000 FAX (571) 218-1800
A/E INFO

APPROVED
FOR COMMANDER NAVFAC
ACTIVITY
SATISFACTORY TO DATE

DES	DRW	CHK
JL	KL	JL

<<CPM/DM>> ----
BRANCH MANAGER --
CHIEF ENG/ARCH ---
<<-->> --

DEPARTMENT OF THE NAVY
NAVAL FACILITIES ENGINEERING COMMAND
NAVAL FACILITIES ENGINEERING COMMAND, WASHINGTON
WASHINGTON, D.C.
THE NAVY YARD
NAVAL AIR STATION – PAX RIVER
ST. MARY'S CO., MD.
HANGAR 111-HANGAR DOORS REPLACEMENT
STRUCTURAL GENERAL NOTES

SCALE: NO SCALE
EPROJECT NO. 1323946
CONSTR. CONTR. NO. –
NAVFAC DRAWING NO. 13083189
SHEET 23 OF 35
S-001

DRAWFORM REVISION: 10 MARCH 2009

FILE NAME: C:\pwworking\gbno\tanudjh\d0896253\BLDG111-1323946-S001.dwg LAYOUT NAME: Layout1 PLOTTED: Thursday, August 18, 2016 - 11:32pm USER: TanudjH

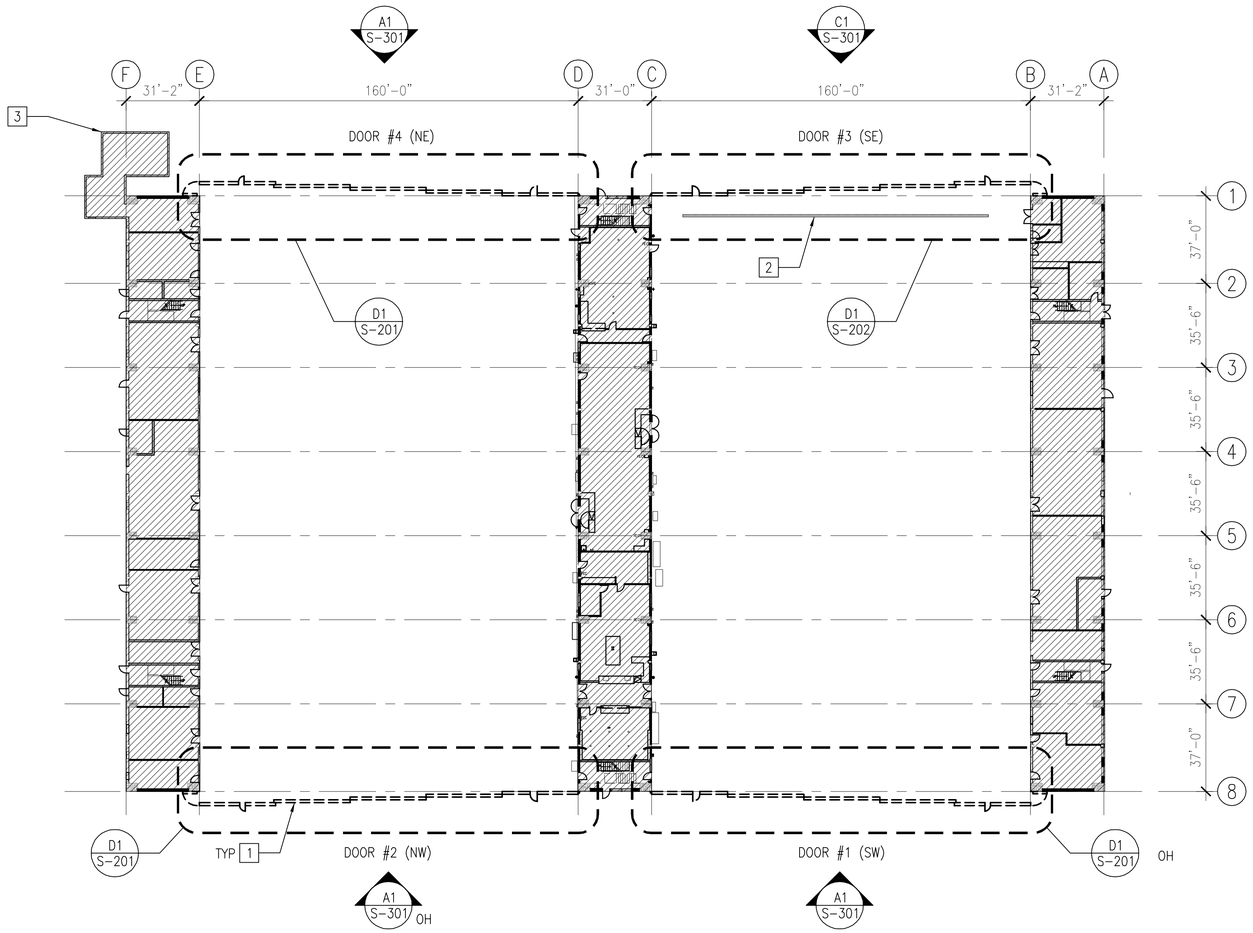

PLAN NORTH

OVERALL EXISTING DOOR TRACK DEMOLITION PLAN

SCALE: 1/32" = 1'-0"

KEY NOTES

1. REMOVE EXISTING HANGAR DOOR SYSTEM INCLUDING DOOR PANELS, HEADER GUIDES, AND BOTTOM TRACK. IMMEDIATELY INSTALL TEMPORARY CURTAIN WALL INDICATED ON SHEET S-301 AFTER DOOR REMOVAL.
2. EXISTING FLOOR TRENCH TO REMAIN.
3. EXISTING SINGLE STORY MASONRY WALL ANNEX BUILDING (NIC).

32' 16' 0 32'

SCALE: 1/32"= 1'-0"

LEGEND

NOT IN CONTRACT (NIC)

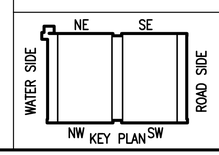

KEY PLAN

PLAN NORTH

SYM	DESCRIPTION	DATE	APPR

NAVFAC

COMMONWEALTH OF VIRGINIA
JAMES HARRIS LOPER
Lic. No. 0402050404
8/29/2016
PROFESSIONAL ENGINEER
SEAL

JACOBS
1100 NORTH GLEBE ROAD SUITE 500
ARLINGTON, VIRGINIA 22201
TEL (571) 218-1000 FAX (571) 218-1800

A/E INFO

APPROVED

FOR COMMANDER NAVFAC

ACTIVITY

SATISFACTORY TO DATE

DES	AG	DRW	YN	CHK	AG

<<PM/DM>> ----
BRANCH MANAGER --
CHIEF ENG/ARCH ---
<<->> --

DEPARTMENT OF THE NAVY
NAVAL FACILITIES ENGINEERING COMMAND
NAVAL FACILITIES ENGINEERING COMMAND, WASHINGTON
THE NAVY YARD WASHINGTON, D.C.
NAVAL AIR STATION – PAX RIVER ST. MARY'S CO., MD.

HANGAR 111-HANGAR DOORS REPLACEMENT

OVERALL DEMOLITION FLOOR PLAN

SCALE: 1/32" = 1'-0"
EPROJECT NO. 1323946
CONSTR. CONTR. NO. –
NAVFAC DRAWING NO. 13083190
SHEET 24 OF 35

SD-101

DRAWFORM REVISION: 10 MARCH 2009

FILE NAME: C:\pwworking\pbna\tanudjh\d0896253\BLDG111-1323946-SD101.dwg LAYOUT NAME: Layout1 PLOTTED: Thursday, August 18, 2016 - 11:33pm USER: TanudjH

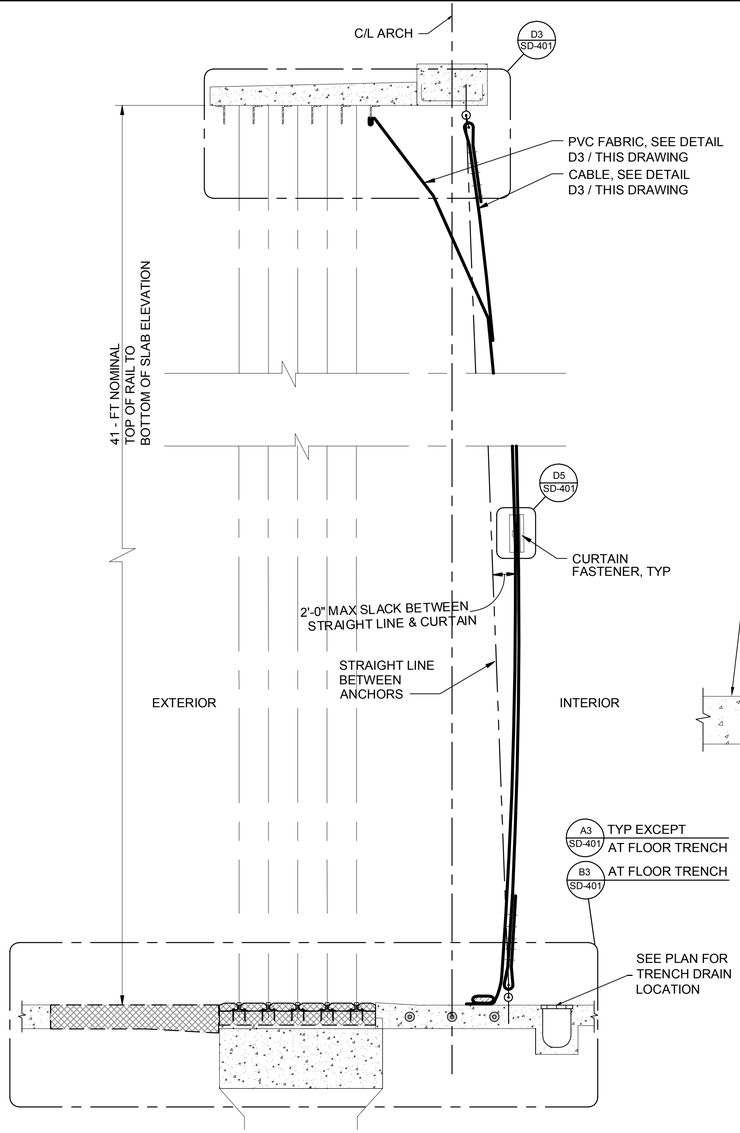

CURTAIN WALL & DEMOLITION SECTION @ SE DOOR (B1)

SCALE: 3/8" = 1'-0" SD-401

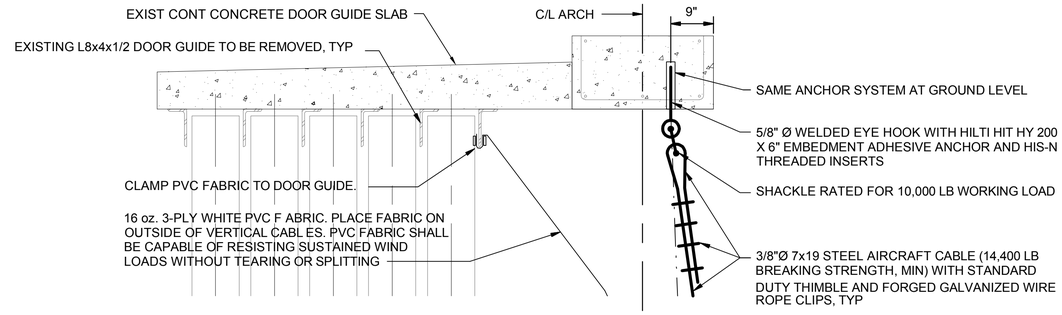

CURTAIN WALL & DEMOLITION SECTION @ DOOR HEAD (D3)

SCALE: 3/4" = 1'-0" SD-401

NOTE: COORDINATE WITH REPAIR WORK REQUIRED AT SOFFIT OF DOOR GUIDE SLAB. SEE DRAWING S-111 FOR ADDITIONAL INFORMATION.

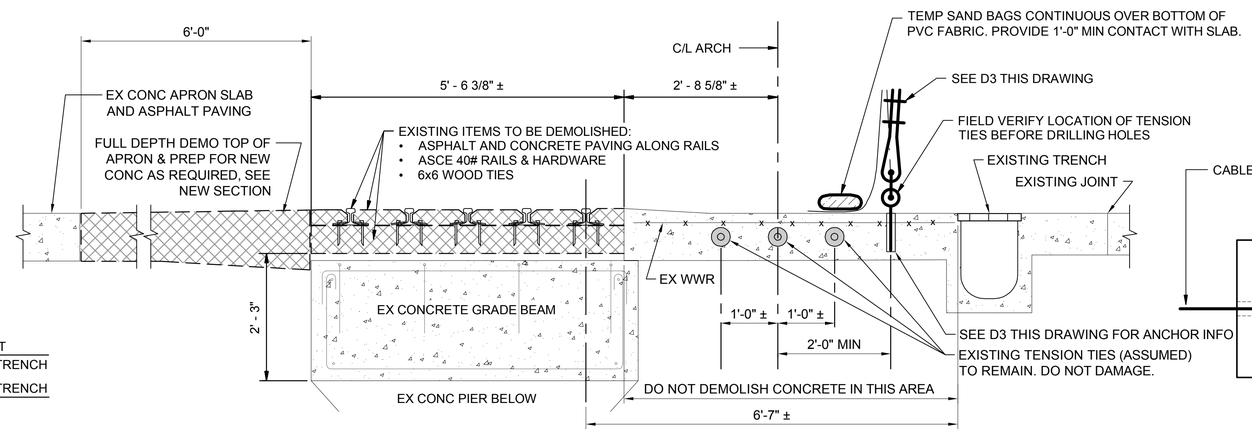

CURTAIN WALL & DEMOLITION SECTION @ GROUND LEVEL, SE DOOR (B3)

SCALE: 3/4" = 1'-0" SD-401

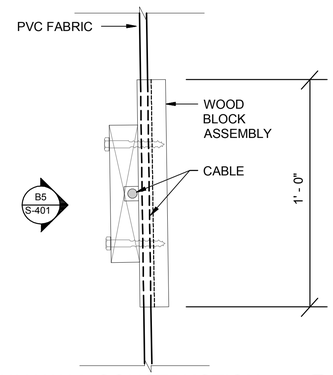

TYPICAL CURTAIN WALL CONSTRUCTION (D5)

SCALE: 3" = 1'-0" SD-401

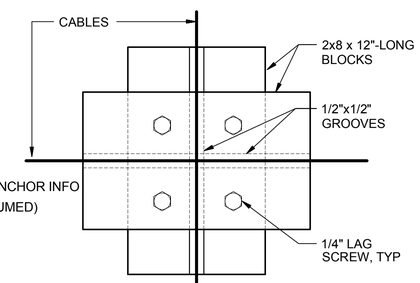

NOTE: WORK THIS DETAIL WITH D5/SD-401

CURTAIN WALL FASTENER BLOCK DETAIL (B5)

SCALE: 3" = 1'-0" SD-401

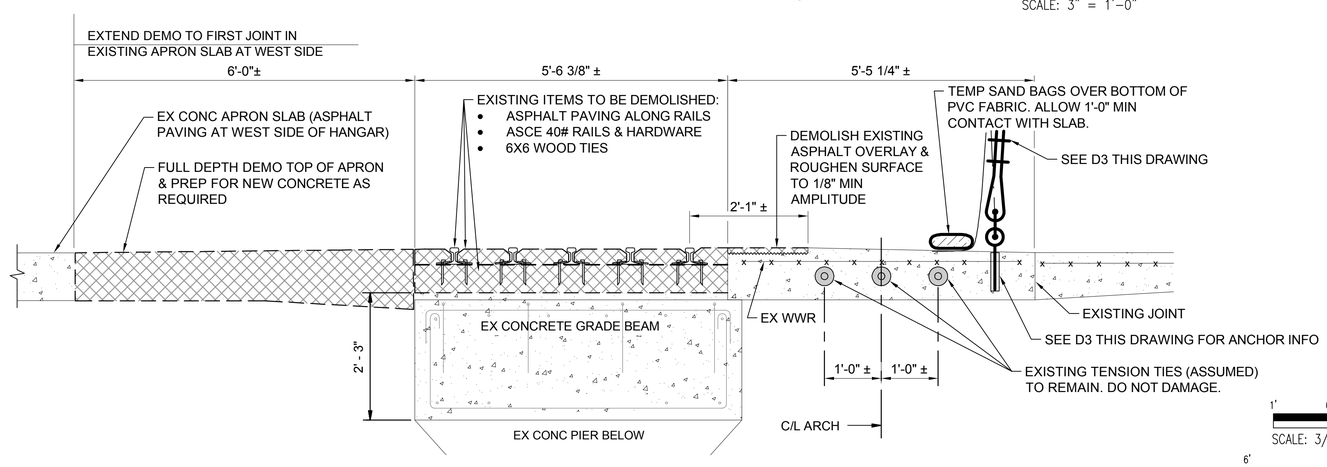

CURTAIN WALL & DEMOLITION SECTION @ GROUND LEVEL, TYP DOOR (A3)

SCALE: 3/4" = 1'-0" SD-401

SCALE: 3/4"= 1'-0"

SCALE: 3/8"= 1'-0"

SCALE: 3"= 1'-0"

SCALE:	VARIES
EPROJECT NO.:	1323946
CONSTR. CONTR. NO.	–
NAVFAC DRAWING NO.	13083191
SHEET	25 OF 35

SD-401

DEPARTMENT OF THE NAVY
NAVAL FACILITIES ENGINEERING COMMAND
THE NAVY YARD WASHINGTON, D.C.
NAVAL FACILITIES ENGINEERING COMMAND, WASHINGTON
NAVAL AIR STATION – PAX RIVER ST. MARY'S CO., MD.
HANGAR 111-HANGAR DOORS REPLACEMENT
DEMOLITION SECTIONS & TEMPORARY CURTAIN WALL SECTIONS

JACOBS
1100 NORTH GLEBE ROAD SUITE 500
ARLINGTON, VIRGINIA 22201
TEL (571) 218-1000 FAX (571) 218-1800

APPROVED
FOR COMMANDER NAVFAC
ACTIVITY
SATISFACTORY TO DATE
DES AG DRW YN CHK AG
BRANCH MANAGER
CHIEF ENG/ARCH

DRAWFORM REVISION: 10 MARCH 2009

FILE NAME: C:\pwworking\pbro\tonudjh\d0896253\BLDG111-1323946-SD401.dwg LAYOUT NAME: Layout1 PLOTTED: Thursday, August 18, 2016 - 11:35pm USER: TonudjH

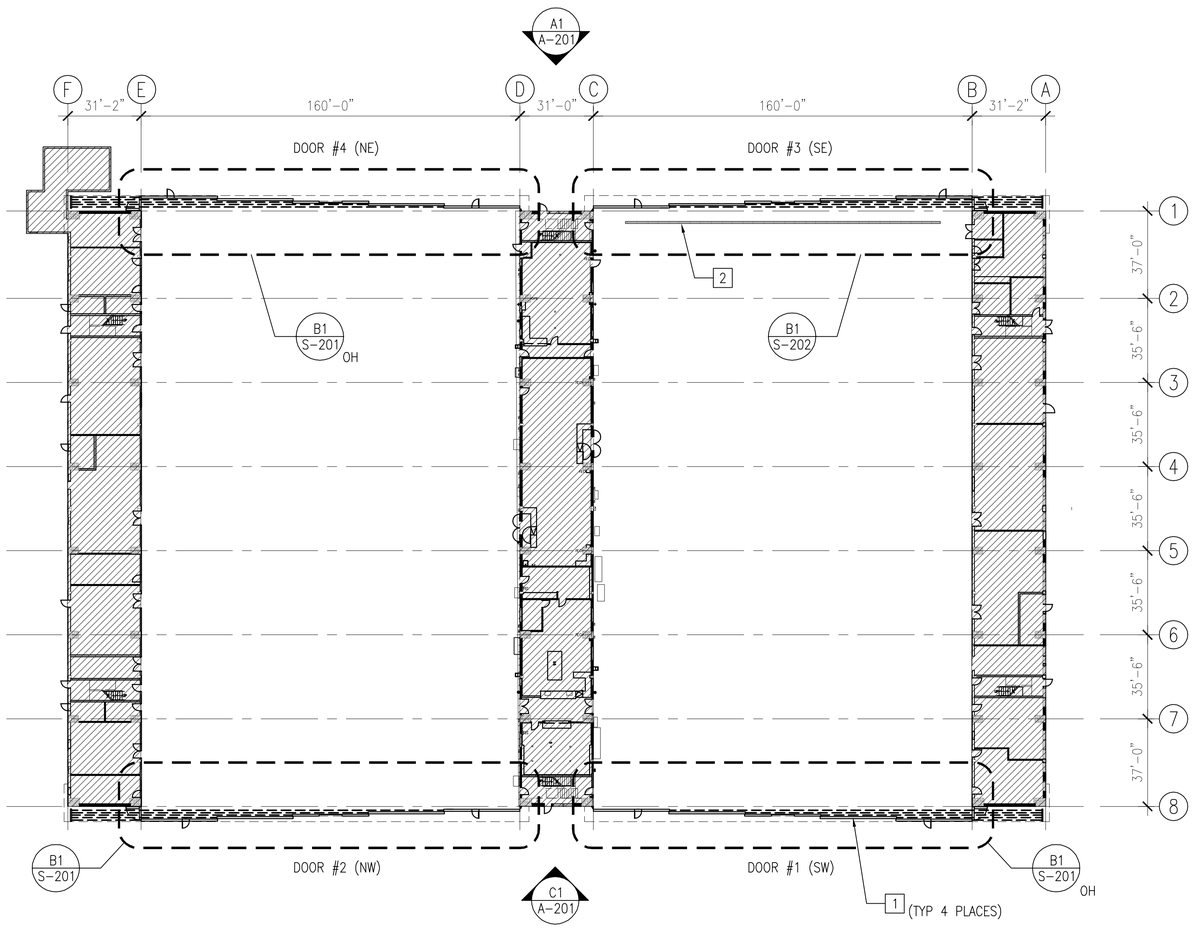

PLAN NORTH

OVERALL NEW DOOR TRACK PLAN

SCALE: 1/32" = 1'-0"

KEY NOTES

1. PROVIDE HANGAR DOOR SYSTEM
2. EXISTING FLOOR TRENCH

LEGEND

NOT IN CONTRACT (NIC)

32' 16' 0 32'

SCALE: 1/32"= 1'-0"

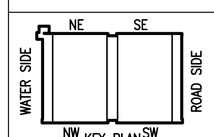

KEY PLAN

PLAN NORTH

SYM	DESCRIPTION	DATE	APPR

NAVFAC

COMMONWEALTH OF VIRGINIA
JAMES HARRIS LOPER
Lic. No. 0402050404
8/29/2016
PROFESSIONAL ENGINEER
SEAL

JACOBS
1100 NORTH GLEBE ROAD SUITE 500
ARLINGTON, VIRGINIA 22201
TEL (571) 218-1000 FAX (571) 218-1800

A/E INFO

APPROVED

FOR COMMANDER NAVFAC

ACTIVITY

SATISFACTORY TO DATE

DES	AG	DRW	YN	CHK	AG

<<CPM/DM>> ----
BRANCH MANAGER --
CHIEF ENG/ARCH ---
<<-->> --

DEPARTMENT OF THE NAVY
NAVAL FACILITIES ENGINEERING COMMAND
NAVAL FACILITIES ENGINEERING COMMAND, WASHINGTON
WASHINGTON, D.C.
THE NAVY YARD
NAVAL AIR STATION – PAX RIVER
ST. MARY'S CO., MD.

HANGAR 111-HANGAR DOORS REPLACEMENT

OVERALL NEW WORK FLOOR PLAN

SCALE: 1/32" = 1'-0"
EPROJECT NO. 1323946
CONSTR. CONTR. NO. –
NAVFAC DRAWING NO. 13083192
SHEET 26 OF 35

S-101

DRAWFORM REVISION: 10 MARCH 2009

FILE NAME: C:\pwworking\gpno\tonudjih\d0892653\BLDG111-1323946-S101.dwg LAYOUT NAME: Layout1 PLOTTED: Thursday, August 18, 2016 - 11:37pm USER: TonudjiH

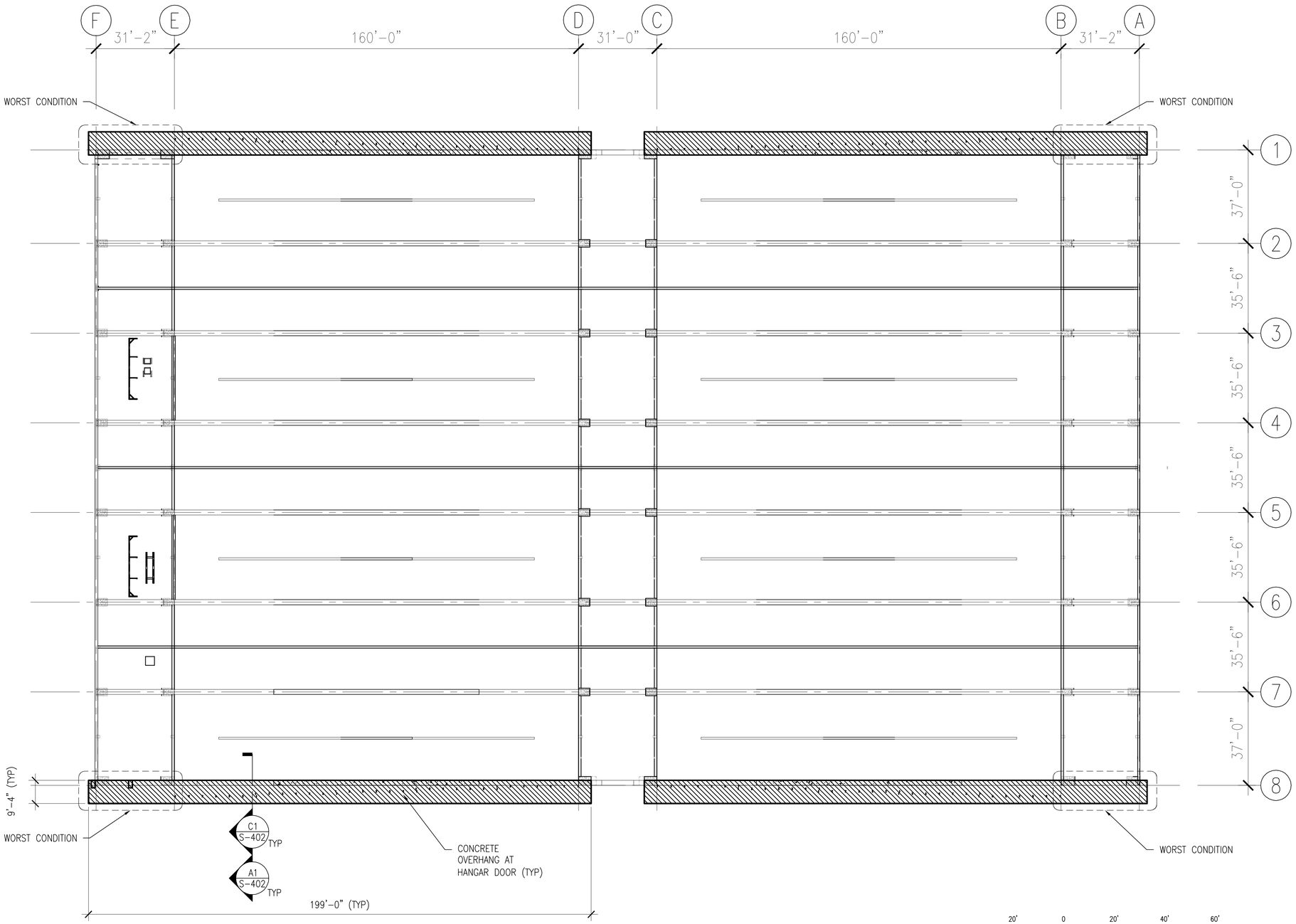

PLAN NORTH

HANGAR DOOR OVERHANG PLAN

SCALE: 3/64" = 1'-0"

LEGEND:
INDICATES EXTENT OF CONCRETE OVERHANG SOFFIT REQUIRING REPAIRS

20' 0 20' 40' 60'

SCALE: 3/64" = 1'-0"

SHEET NOTES

1. BASED ON VISUAL EXAMINATION AND SOUNDING, THERE IS SIGNIFICANT CRACKING, SPALLING AND REBAR CORROSION AT THE BOTTOM SIDE (SOFFIT) OF THE SLABS THAT OVERHANG EACH HANGAR DOOR. THE HATCHED AREA INDICATES THE EXTENT OF SLAB REQUIRING REPAIRS. THE WORST CONDITION IS AT EACH OF THE FOUR CORNERS INDICATED. CONDUCT A WALK-THROUGH TO OBSERVE ACTUAL CONDITIONS PRIOR TO PROVIDING A BID QUOTATION.
2. PORTIONS OF REINFORCING BARS AT THE BOTTOM SIDE OF THE SLAB ARE CORRODED. THE AFFECTED BARS ARE 3/8-IN DIAMETER SPACED AT APPROXIMATELY 8-IN EACH WAY. IT IS ANTICIPATED THAT MOST OF THE CORROSION IS LIMITED TO SURFACE RUST THAT WILL BE REPAIRED USING THE REPAIR PROCEDURES INDICATED ON THE DRAWINGS. CONDITIONS WHERE SIGNIFICANT CORROSION IS ENCOUNTERED (MORE THAN 15% OF CROSS SECTION) WILL BE ADDRESSED ON A CASE BY CASE BASIS.
3. PORTIONS OF THE AFFECTED REINFORCING BARS HAVE LESS THAN ONE-INCH OF CONCRETE COVER. AS PART OF THE REPAIR WORK, PROVIDE 1 1/2-IN COVER WHERE PRACTICABLE BY PUSHING THE REBAR UPWARD AND SECURING WITH TIE WIRES OR BY SLIGHTLY BUILDING UP THE SECTION WITH REPAIR MATERIAL. SEE ALSO NOTE #4 BELOW.
4. TO INCREASE COVER ON EXISTING REINFORCING BARS, IT IS PERMISSIBLE TO REMOVE CORRODED TIE WIRES AND REINFORCING BAR CHAIRS/SUPPORTS SO LONG AS THE AFFECTED REBARS REMAIN FIRMLY IN PLACE.
5. THE EXISTING DOOR SYSTEM INCLUDES EMBEDDED METAL CONNECTION ANCHORS OR TAB PLATES SPACED PERIODICALLY ALONG THE LENGTH OF THE SLAB SOFFIT. THESE ANCHORS ARE SHOWING INDICATIONS OF SURFACE CORROSION. AS PART OF THE REPAIR WORK, COMPLETELY REMOVE OR REPAIR THE ANCHORS IN PLACE USING THE REPAIR PROCEDURES INDICATED.
6. THERE ARE TWO (2) EXISTING REINFORCED CONCRETE COLUMNS AT EACH CORNER AREA. EACH COLUMN IS CLAD WITH CORRUGATED METAL PANELING. REMOVE THE PANELS AS REQUIRED TO REPAIR THE SLAB SOFFIT. IMMEDIATELY REPORT TO THE COR ANY CRACKING OR DAMAGE OBSERVED AT THE COLUMNS THAT IS REVEALED BY REMOVING THE CLADDING. REPLACE THE PANELING AFTER COMPLETION OF REPAIRS.

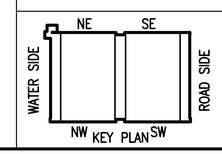

KEY PLAN

PLAN NORTH

SYM	DESCRIPTION	DATE	APPR

NAVFAC

COMMONWEALTH OF VIRGINIA
JAMES HARRIS LOPER
Lic. No. 0402050404
8/29/2016
PROFESSIONAL ENGINEER
SEAL

JACOBS
1100 NORTH GLEBE ROAD SUITE 500
ARLINGTON, VIRGINIA 22201
TEL (571) 218-1000 FAX (571) 218-1800
A/E INFO

APPROVED
FOR COMMANDER NAVFAC
ACTIVITY

SATISFACTORY TO DATE

DES	AG	DRW	YN	CHK	AG

<<PM/DM>> ----
BRANCH MANAGER --
CHIEF ENG/ARCH ---
<<-->> --

DEPARTMENT OF THE NAVY
NAVAL FACILITIES ENGINEERING COMMAND
NAVAL FACILITIES ENGINEERING COMMAND, WASHINGTON
WASHINGTON, D.C.
THE NAVY YARD
NAVAL AIR STATION - PAX RIVER
ST. MARY'S CO., MD.

HANGAR 111-HANGAR DOORS REPLACEMENT

HANGAR DOOR OVERHANG PLAN

SCALE: 3/64" = 1'-0"
EPROJECT NO. 1323946
CONSTR. CONTR. NO. -
NAVFAC DRAWING NO. 13083193
SHEET 27 OF 35

S-111

DRAWFORM REVISION: 10 MARCH 2009

FILE NAME: C:\pwworking\gbro\tanudjih\d0896253\BLDG111-1323946-S111.dwg LAYOUT NAME: Layout1 PLOTTED: Thursday, August 18, 2016 - 11:39pm USER: TanudjiH

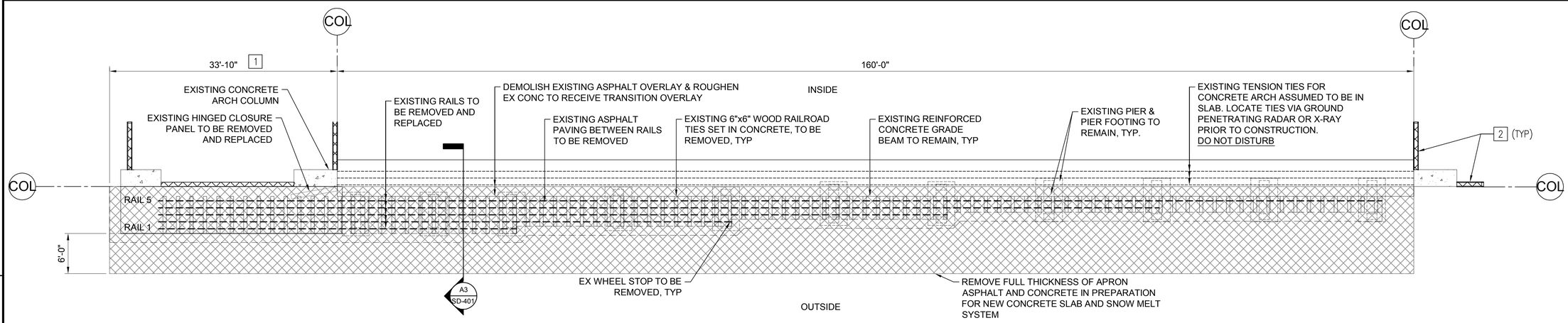

TYPICAL DOOR - EXISTING TRACK & SLAB DEMOLITION PLAN

SCALE: 1/8" = 1'-0" S-201 D1

NOTE:

1. DOOR PANELS NOT SHOWN FOR CLARITY
2. THIS CONDITION IS TYPICAL EXCEPT AT THE SOUTHEAST DOOR. SEE SHEET S-202 FOR SOUTHEAST DOOR.

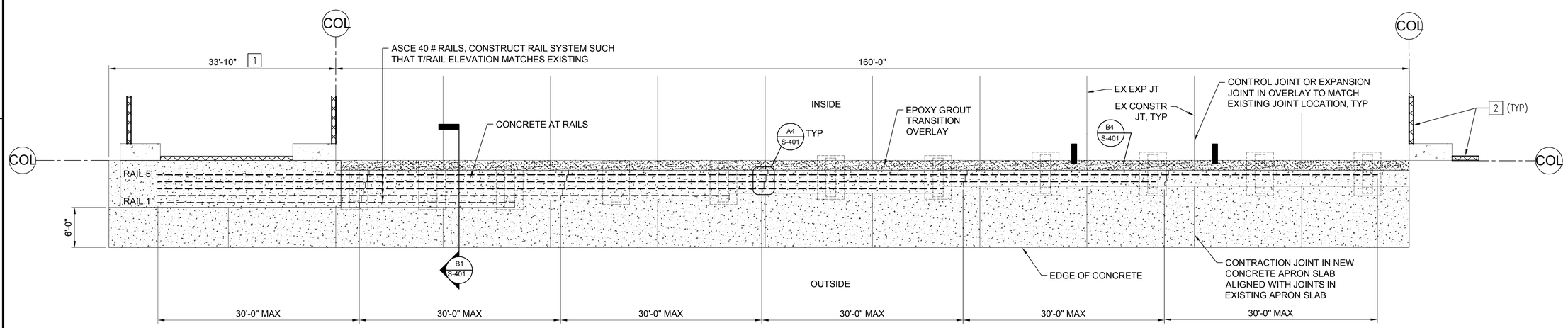

TYPICAL DOOR - NEW TRACK & SLAB PLAN

SCALE: 1/8" = 1'-0" S-201 B1

NORTHEAST DOOR T/RAIL ELEVATION 10.32-FT
NORTHWEST DOOR T/RAIL ELEVATION 10.30-FT
SOUTHWEST DOOR T/RAIL ELEVATION 10.30-FT

NOTE:

1. THIS CONDITION IS TYPICAL EXCEPT AT THE SOUTHEAST DOOR. SEE SHEET S-202 FOR SOUTHEAST DOOR.
2. RAIL JOINT LOCATIONS INDICATE MAXIMUM PERMISSIBLE SPACING. PROVIDE JOINTS AT INTERVALS NOT EXCEEDING THOSE INDICATED FOR THE OVERALL LENGTH OF RAIL REQUIRED.

KEY NOTES

1. VERIFY/COORDINATE EXTENT OF EXISTING SLAB REMOVAL AND REPLACEMENT WITH NEW DOOR SYSTEM.
2. EXISTING MASONRY WALL

8' 4' 0 8'
SCALE: 1/8" = 1'-0"

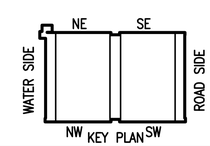

PLAN NORTH

SYM	DESCRIPTION	DATE	APPR

NAVFAC

COMMONWEALTH OF VIRGINIA
JAMES HARRIS LOPER
Lic. No. 0402050404
8/29/2016
PROFESSIONAL ENGINEER
SEAL

JACOBS
1100 NORTH GLEBE ROAD SUITE 500
ARLINGTON, VIRGINIA 22201
TEL (571) 218-1000 FAX (571) 218-1800

A/E INFO

APPROVED
FOR COMMANDER NAVFAC
ACTIVITY
SATISFACTORY TO DATE

DES	AG	DRW	YN	CHK	AG

<<CPM/DM>> ----
BRANCH MANAGER --
CHIEF ENG/ARCH ---
<<-->> --

DEPARTMENT OF THE NAVY
NAVAL FACILITIES ENGINEERING COMMAND
NAVAL FACILITIES ENGINEERING COMMAND, WASHINGTON
WASHINGTON, D.C.
THE NAVY YARD
NAVAL AIR STATION - PAX RIVER
ST. MARY'S CO., MD.
HANGAR 111-HANGAR DOORS REPLACEMENT
TYPICAL DOOR TRACK AND SLAB PLANS

SCALE: 1/8" = 1'-0"
EPROJECT NO.: 1323946
CONSTR. CONTR. NO. -
NAVFAC DRAWING NO. 13083194
SHEET 28 OF 35
S-201

DRAWFORM REVISION: 10 MARCH 2009

FILE NAME: C:\pwworking\gbno\tnudjh\d0896253\BLDG1111-1323946-S201.dwg LAYOUT NAME: Layout1 PLOTTED: Thursday, August 18, 2016 - 11:41pm USER: TonudJH

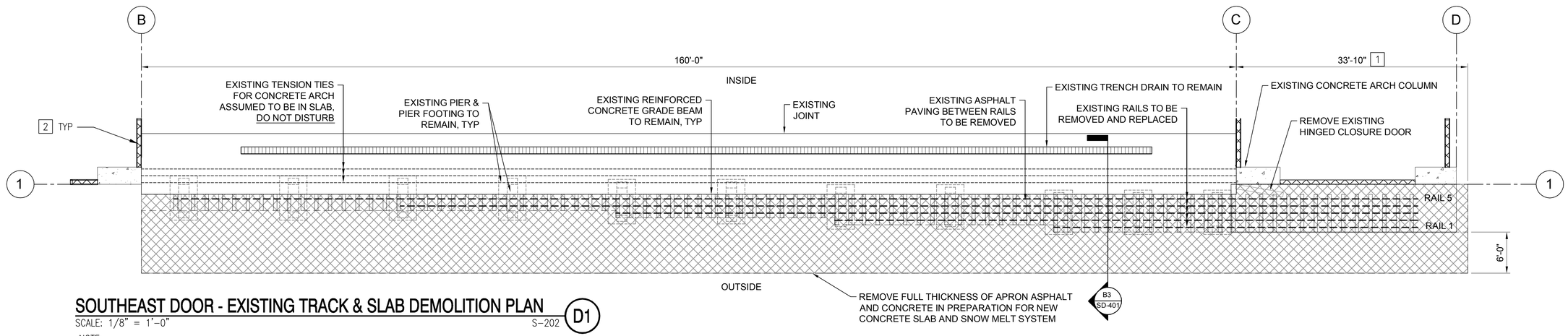

SOUTHEAST DOOR - EXISTING TRACK & SLAB DEMOLITION PLAN (D1)

SCALE: 1/8" = 1'-0" S-202

NOTE:

1. THIS CONDITION VARIES FROM THE TYPICAL CONDITION SHOWN ON SHEET S-201 AS IT INCLUDES A TRENCH DRAIN.

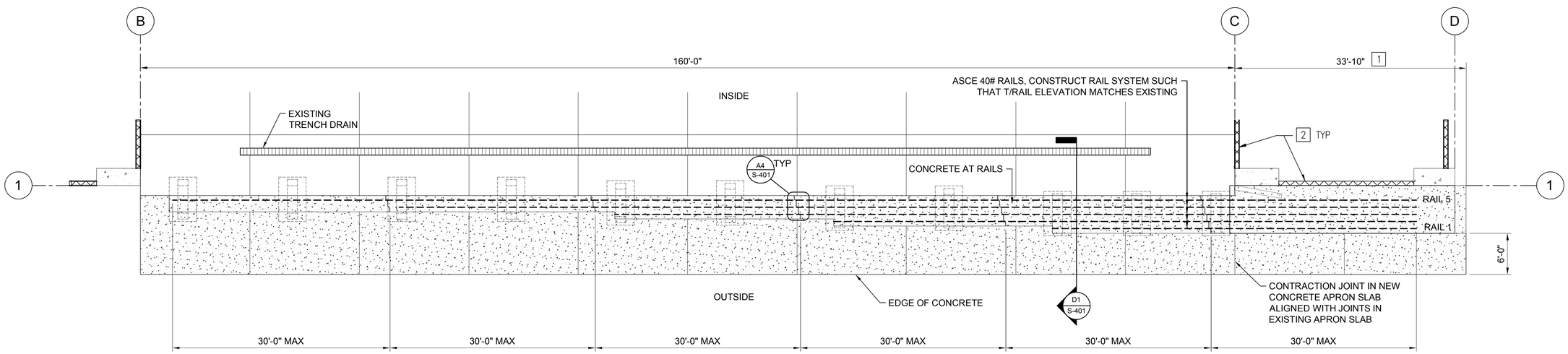

SOUTHEAST DOOR - NEW TRACK & SLAB PLAN (B1)

SCALE: 1/8" = 1'-0" T/RAIL ELEVATION 10.35-FT S-202

NOTE:

1. THIS CONDITION VARIES FROM THE TYPICAL CONDITION SHOWN ON SHEET S-201 AS IT INCLUDES A TRENCH DRAIN.
2. RAIL JOINT LOCATIONS INDICATE MAXIMUM PERMISSIBLE SPACING. PROVIDE JOINTS AT INTERVALS NOT EXCEEDING THOSE INDICATED.

KEY NOTES

1. VERIFY/COORDINATE EXTENT OF EXISTING SLAB REMOVAL AND REPLACEMENT WITH NEW DOOR SYSTEM.
2. EXISTING MASONRY WALL

8' 4' 0 8'
SCALE: 1/8"= 1'-0"

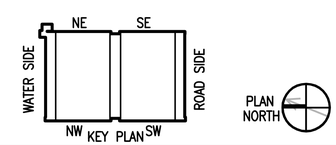

SYM	DESCRIPTION	DATE	APPR

NAVFAC

COMMONWEALTH OF VIRGINIA
JAMES HARRIS LOPER
Lic. No. 0402050404
8/29/2016
PROFESSIONAL ENGINEER
SEAL

JACOBS
1100 NORTH GLEBE ROAD SUITE 500
ARLINGTON, VIRGINIA 22201
TEL (571) 218-1000 FAX (571) 218-1800
A/E INFO

APPROVED
FOR COMMANDER NAVFAC
ACTIVITY
SATISFACTORY TO DATE

DES	AG	DRW	YN	CHK	AG

<<CPM/CMO>> ----
BRANCH MANAGER --
CHIEF ENG/ARCH ---
<<--->> --

DEPARTMENT OF THE NAVY
NAVAL FACILITIES ENGINEERING COMMAND
WASHINGTON, D.C.
THE NAVY YARD
NAVAL AIR STATION – PAX RIVER
ST. MARY'S CO., MD.

HANGAR 111-HANGAR DOORS REPLACEMENT

SOUTHEAST DOOR PLANS

SCALE: 1/8" = 1'-0"
EPROJECT NO.: 1323946
CONSTR. CONTR. NO. –
NAVFAC DRAWING NO. 13083195
SHEET 29 OF 35
S-202

DRAWFORM REVISION: 10 MARCH 2009

FILE NAME: C:\pwworking\ghno\tanudjih\d0896253\BLDG111-1323946-S202.dwg LAYOUT NAME: Layout1 PLOTTED: Thursday, August 18, 2016 - 11:43pm USER: TanudjiH

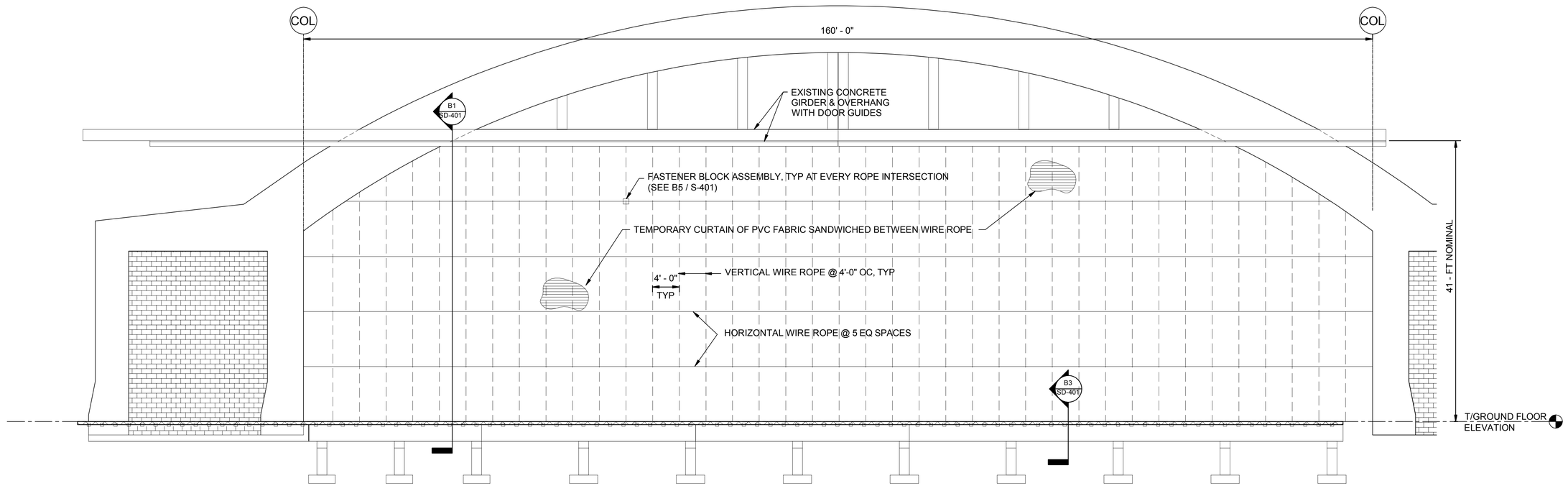

ELEVATION OF SOUTHEAST DOOR BARRIER & DEMOLITION

SCALE: 1/8" = 1'-0" S-301 C1

NOTE: THIS CONDITION IS DIFFERENT FROM THE TYPICAL CONDITION AS IT INCLUDES A TRENCH DRAIN ADJACENT TO THE DOOR.

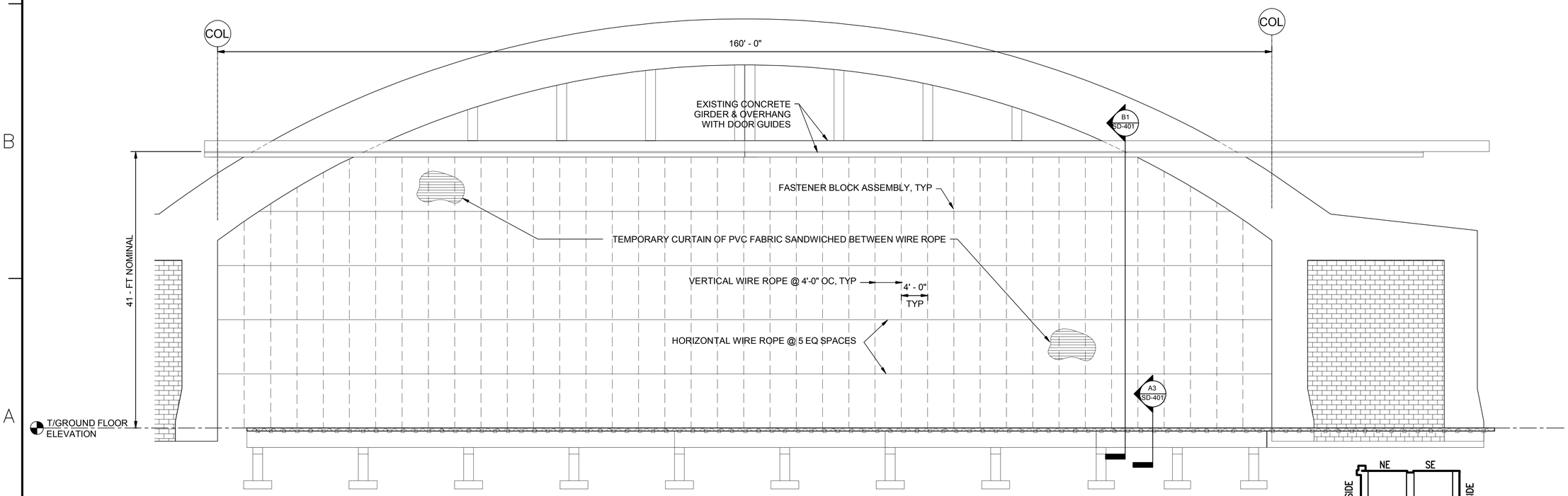

ELEVATION OF TYP DOOR BARRIER & DEMOLITION

SCALE: 1/8" = 1'-0" S-301 A1

NOTE: TYPICAL EXCEPT AT SOUTHEAST DOOR.

8' 4' 0 8'

SCALE: 1/8" = 1'-0"

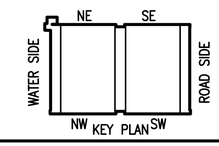

PLAN NORTH

SYM	DESCRIPTION	DATE	APPR

NAVFAC

COMMONWEALTH OF VIRGINIA
JAMES HARRIS LOPER
Lic. No. 0402050404
8/29/2016
PROFESSIONAL ENGINEER
SEAL

JACOBS
1100 NORTH GLEBE ROAD SUITE 500
ARLINGTON, VIRGINIA 22201
TEL (571) 218-1000 FAX (571) 218-1800

A/E INFO

APPROVED

FOR COMMANDER NAVFAC

ACTIVITY

SATISFACTORY TO DATE

DES AG DRW YN CHK AG

<<PM/DM>> ----

BRANCH MANAGER --

CHIEF ENG/ARCH ---

<<-->> --

DEPARTMENT OF THE NAVY
THE NAVY YARD
NAVAL FACILITIES ENGINEERING COMMAND
WASHINGTON, D.C.
NAVAL FACILITIES ENGINEERING COMMAND, WASHINGTON
NAVAL AIR STATION – PAX RIVER
ST. MARY'S CO., MD.

HANGAR 111-HANGAR DOORS REPLACEMENT

ELEVATIONS

SCALE: 1/8" = 1'-0"

EPROJECT NO.: 1323946

CONSTR. CONTR. NO. –

NAVFAC DRAWING NO. 13083196

SHEET 30 OF 35

S-301

DRAWFORM REVISION: 10 MARCH 2009

FILE NAME: C:\pwworking\gbro\tonudjih\d0896253\BLDG111-1323946-S301.dwg LAYOUT NAME: Layout1 PLOTTED: Thursday, August 18, 2016 - 11:45pm USER: TonudjiH

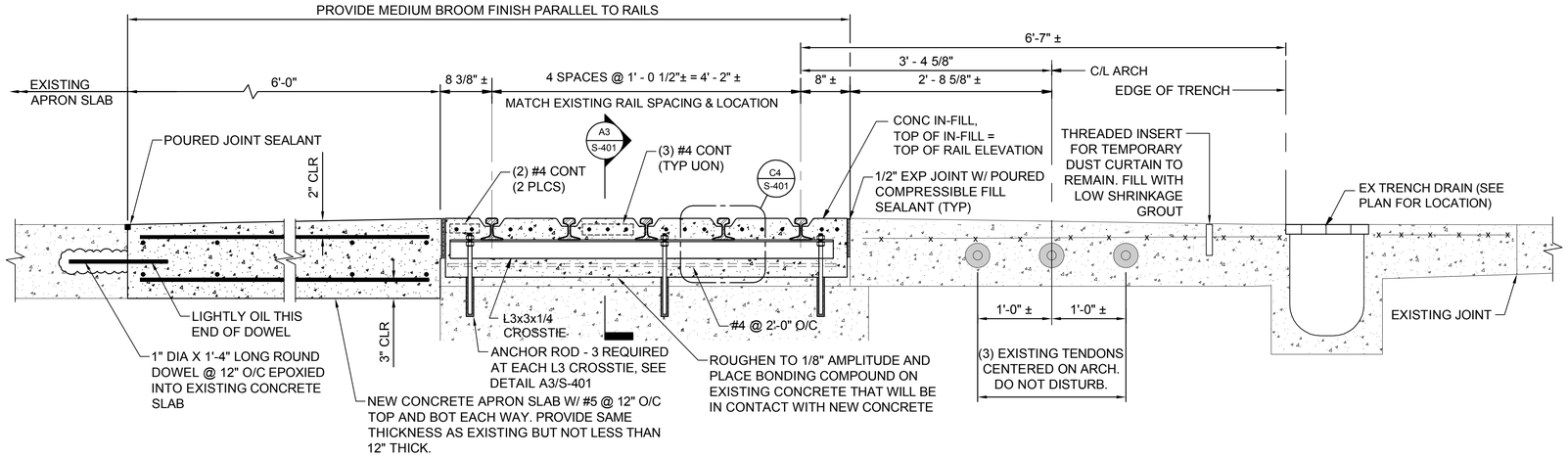

BOTTOM RAIL SECTION AT SOUTHEAST DOOR (D1)

SCALE: 1" = 1'-0" S-401

NOTE: SOUTHEAST DOOR IS DIFFERENT FROM TYPICAL DOOR AS IT INCLUDES A FLOOR TRENCH.

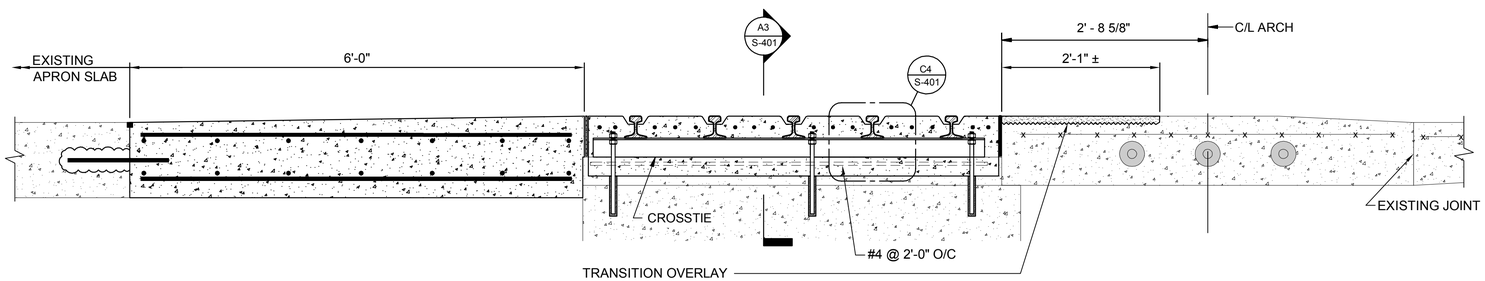

TRANSITION OVERLAY

PROVIDE MASTERSEAL 350 EPOXY-BASED CONCRETE OVERLAY SYSTEM WITH MASTERSEAL 940 #8 AGGREGATE BY BASF CORPORATION OR APPROVED EQUAL. THE EPOXY RESIN COMPONENT OF THE SYSTEM SHALL BE A LOW MODULUS, 100% SOLIDS, 1:1 MIX RATIO EPOXY. INSTALL IN ACCORDANCE WITH MANUFACTURER'S WRITTEN INSTRUCTIONS AND AS FOLLOWS:

1. COMPLETELY REMOVE EXISTING ASPHALT OVERLAY MATERIAL DOWN TO EXISTING CONCRETE SLAB.
2. ROUGHEN THE CONCRETE SURFACE TO 1/8-INCH AMPLITUDE.
3. ENSURE THE CONCRETE SURFACE IS SOUND, FREE OF LAITANCE, CLEAN, AND DRY.
4. PRIME THE SURFACE WITH NEAT RESIN MATERIAL.
5. MIX THE EPOXY COMPONENTS WITH AGGREGATE AND PLACE WITH A TROWEL OR FLOAT PER MANUFACTURER RECOMMENDATIONS.
6. PROVIDE A NON-SLIP TEXTURED SURFACE AND COATING TO MATCH EXISTING INTERIOR SLAB COLOR AND APPEARANCE.
7. PROVIDE CONTRACTION JOINTS IN THE OVERLAY MATCHING THOSE IN THE EXISTING ADJACENT FLOOR SLAB AND AT MIDWAY BETWEEN EXISTING JOINTS.

BOTTOM RAIL SECTION AT TYPICAL DOOR (B1)

SCALE: 1" = 1'-0" S-401

NOTES:

1. NO FLOOR TRENCH AT TYPICAL LOCATIONS.
2. SEE DETAIL D1 THIS SHEET FOR ADDITIONAL INFORMATION.

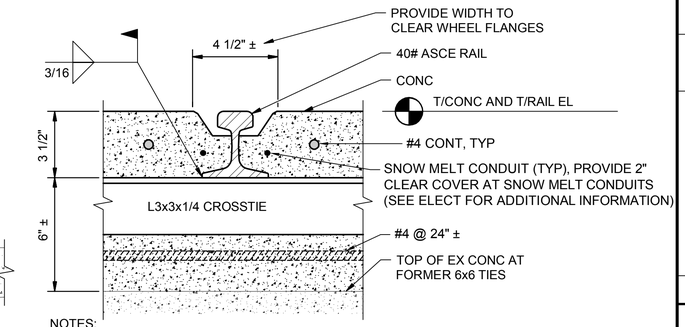

NOTES:

1. INSTALL RAILS IN MAXIMUM LENGTHS OF 30'-0" AS INDICATED ON THE PLAN DRAWINGS.
2. INSTALL RAILS LEVEL & TRUE TO ALIGNMENT. DOORS SHALL OPERATE SMOOTHLY AFTER RAILS ARE INSTALLED.
3. IN ADDITION TO #4 PRIMARY BARS INDICATED ON THIS DETAIL, PROVIDE #3 HAIRPIN BARS AS INDICATED ON DETAIL A4 THIS SHEET.

DOOR BOTTOM TRACK DETAIL (C4)

SCALE: 3" = 1'-0" S-401

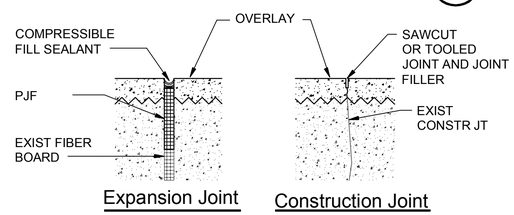

OVERLAY JOINT DETAIL (B4)

SCALE: 3" = 1'-0" S-401

NOTE: MATCH NEW WITH EXISTING JOINT LOCATIONS.

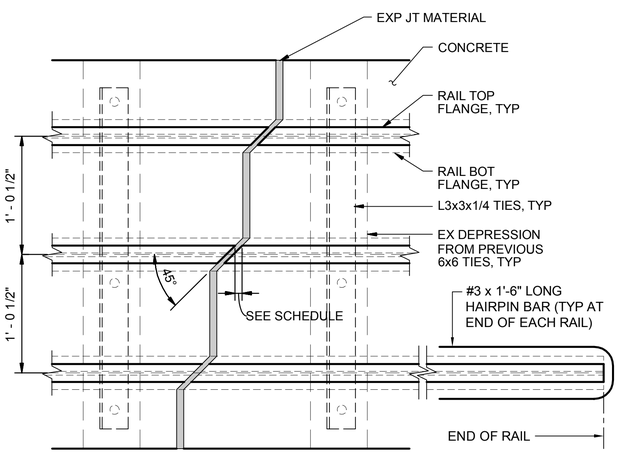

BOTTOM RAIL JOINT PLAN DETAIL (A4)

SCALE: 1 1/2" = 1'-0" S-401

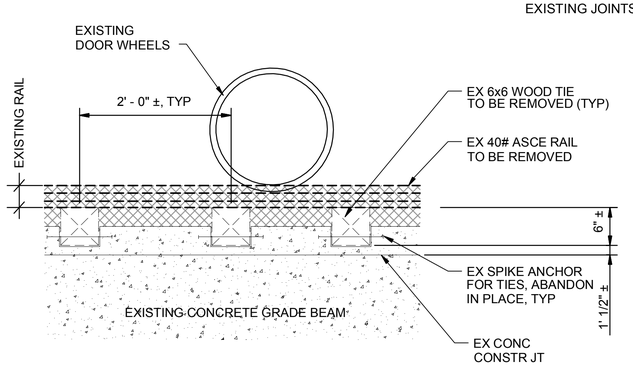

BOTTOM RAIL DEMOLITION DETAIL (A1)

SCALE: 1" = 1'-0" S-401

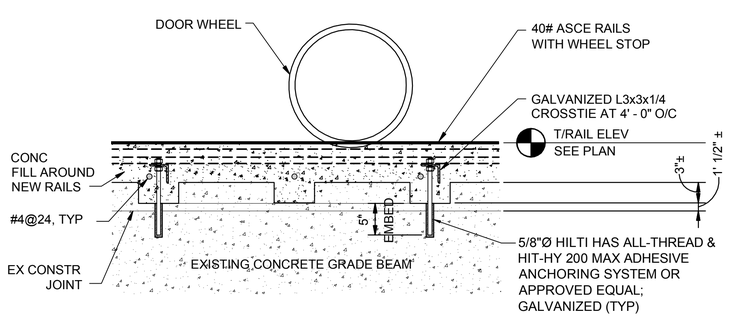

BOTTOM RAIL DETAIL (A3)

SCALE: 1" = 1'-0" S-401

RAIL GAP SCHEDULE	
AMBIENT TEMPERATURE	GAP
20°F	1/4"
45°F	3/16"
70°F	1/8"
95°F	1/16"
120°F	0"

1' 6" 0 1'
SCALE: 3"= 1'-0"

16' 8' 0 16'
SCALE: 1-1/2"= 1'-0"

1" 1/2" 0 1"
SCALE: 1"= 1"

					APPR
					DATE
					DESCRIPTION
					SYM

NAVFAC

COMMONWEALTH OF VIRGINIA
JAMES HARRIS LOPER
Lic. No. 0402050404
8/29/2016
PROFESSIONAL ENGINEER
SEAL

JACOBS
1100 NORTH GLEBE ROAD SUITE 500
ARLINGTON, VIRGINIA 22201
TEL (571) 218-1000 FAX (571) 218-1800

A/E INFO

APPROVED

FOR COMMANDER NAVFAC

ACTIVITY

SATISFACTORY TO DATE

DES	AG	DRW	YN	CHK	AG

<<PM/DM>> ----
BRANCH MANAGER --
CHIEF ENG/ARCH ---
<<--->> --

DEPARTMENT OF THE NAVY
NAVAL FACILITIES ENGINEERING COMMAND
WASHINGTON, D.C.
THE NAVY YARD
NAVAL FACILITIES ENGINEERING COMMAND, WASHINGTON
NAVAL AIR STATION – PAX RIVER
ST. MARY'S CO., MD.

HANGAR 111-HANGAR DOORS REPLACEMENT

SECTIONS AND DETAILS

SCALE: 1/8" = 1'-0"
EPROJECT NO.: 1323946
CONSTR. CONTR. NO. –
NAVFAC DRAWING NO. 13083197
SHEET 31 OF 35

S-401

DRAWFORM REVISION: 10 MARCH 2009

FILE NAME: C:\pwworking\pbna\tonudjh\d0896253\BLDG111-1323946-S401.dwg LAYOUT NAME: Layout1 PLOTTED: Thursday, August 18, 2016 - 11:47pm USER: TonudJH

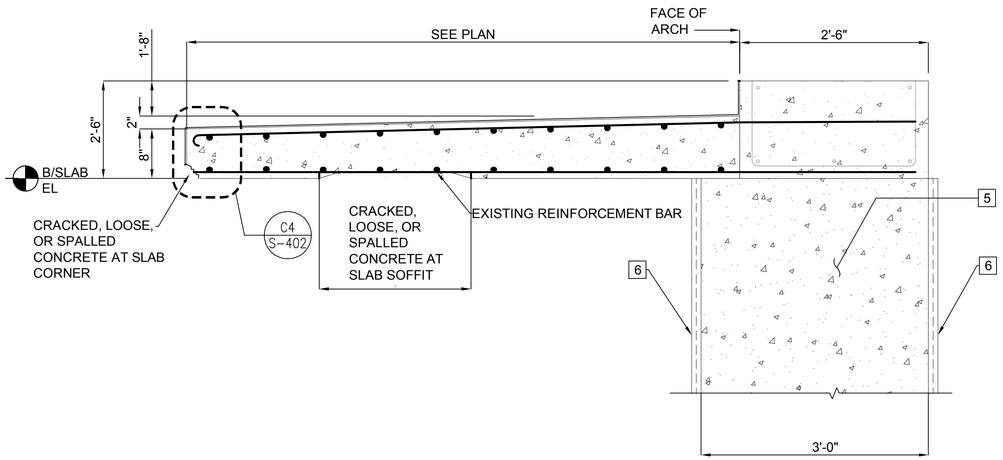

SECTION - EXISTING SLAB CONDITION

SCALE: 1" = 1'-0"

S-402 C1

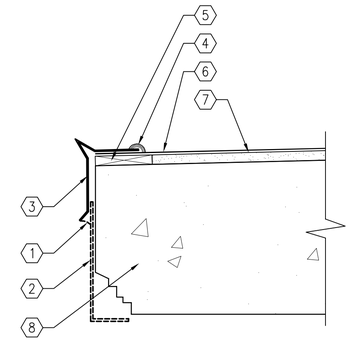

EDGE OF SLAB - DEMO DETAIL

SCALE: 3" = 1'-0"

S-402 C4

NOTE: REFER TO DETAIL C1/S-402 FOR ADDITIONAL INFORMATION.

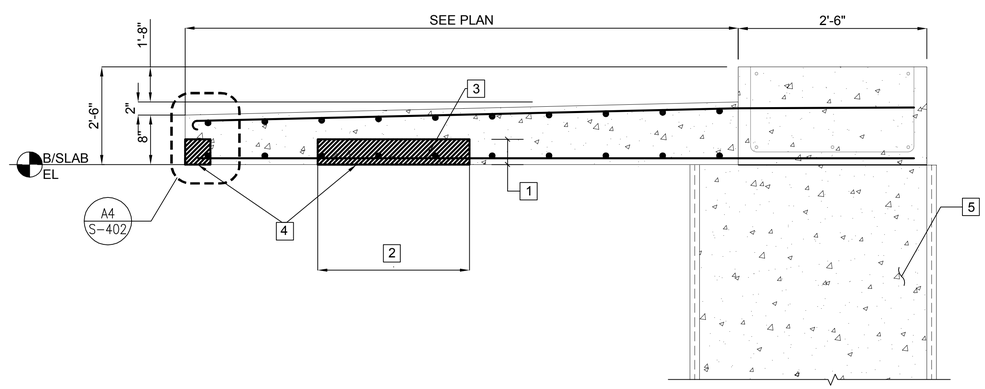

SECTION - REPAIRED SLAB CONDITION

SCALE: 1" = 1'-0"

S-402 A1

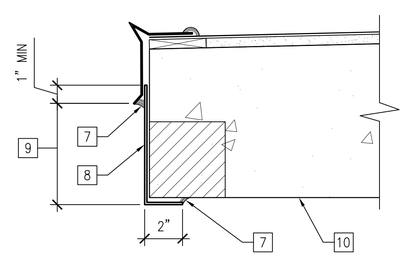

EDGE OF SLAB - REPAIR DETAIL

SCALE: 3" = 1'-0"

S-402 A4

NOTE: REFER TO DETAIL A1/S-402 & C4/S-402 FOR ADDITIONAL INFORMATION.

1" 1/2" 0 1"

SCALE: 1"= 1"

1' 6" 0 1'

SCALE: 3"= 1'-0"

SHEET NOTES

1. THE SLAB SOFFIT IS 41-FT NOMINALLY ABOVE TOP OF GROUND LEVEL. PROVIDE SCAFFOLDING, FALL PROTECTION, AND DUST/DEBRIS CURTAINS IMMEDIATELY AROUND AND BENEATH THE WORK AREA TO ENSURE WORKER SAFETY AND ENSURE THAT NO FOREIGN OBJECT DEBRIS FALL ON TO THE APRON SLAB BELOW.

DEMO NOTES

1. REMOVE EXISTING SEALANT
2. REMOVE EXISTING METAL PANEL FASCIA
3. PRE-FINISHED SHEET METAL FLASHING TO REMAIN
4. EXISTING SEALANT JOINT AT MEMBRANE'S JUNCTION TO REMAIN
5. EXISTING TREATED WOOD BLOCKING TO REMAIN
6. EXISTING 3 PLY SBS MODIFIED BITUMEN ROOFING SYSTEM TO REMAIN
7. EXISTING $\frac{1}{2}$" THICK EXTERIOR ROOF SHEATHING COVER BOARD TO REMAIN
8. EXISTING CONCRETE SLAB TO REMAIN

KEY NOTES

1. REMOVE TO SOUND CONCRETE BUT NOT LESS THAN 1-INCH BEYOND UPPERMOST EDGE OF REBAR. PROVIDE A SQUARE SHOULDER AT THE ENTIRE PERIMETER OF THE REPAIR. DO NOT FEATHER THE EDGES.
2. LIMIT OF REPAIR AREA IS DEFINED AS THE LOCATION WHERE SOUND CONCRETE AND NON-CORRODED REINFORCEMENT BAR IS ENCOUNTERED.
3. USING A STIFF WIRE BRUSH, GRINDING WHEEL, OR SIMILAR, THOROUGHLY CLEAN REBAR OF SURFACE RUST, PAINT, AND CONTAMINANTS. PROVIDE A SINGLE COMPONENT, HIGH ZINC CONTENT, EPOXY PRIMER APPLIED TO THE REBAR IN TWO COATS AND IN ACCORDANCE WITH THE MANUFACTURER'S WRITTEN INSTRUCTIONS. USE MASTERPROTECT P 8100AP BY BASF CORPORATION OR APPROVED EQUAL.
4. PROVIDE A NONSAG, LIGHTWEIGHT, SINGLE COMPONENT, HIGH-STRENGTH POLYMER-MODIFIED, SILICA-FUME-ENHANCED, REPAIR MORTAR WITH INTEGRAL CORROSION INHIBITOR THAT IS MANUFACTURED SPECIFICALLY FOR VERTICAL AND OVERHEAD APPLICATIONS. APPLY AND CURE MATERIAL IN ACCORDANCE WITH MANUFACTURER'S WRITTEN APPLICATION INSTRUCTIONS. DO NOT APPLY MATERIAL AT TEMPERATURES OUTSIDE THE RANGE OF 40 TO 90-DEGREES FAHRENHEIT. USE MASTERMACO N 425 BY BASF CORPORATION OR APPROVED EQUAL.
5. EXISTING CONCRETE COLUMN (1'-6" X 3'-0") FROM OVERHANG DOWN TO MAIN BUILDING STRUCTURE. TWO PER HANGAR DOOR (8 TOTAL) LOCATED ON TOP OF LEAN-TO STRUCTURES AT THE ENDS OF THE DOORS.
6. EXISTING CORRUGATED METAL CLADDING AROUND PERIMETER AND FULL HEIGHT OF CONCRETE COLUMN. CAREFULLY REMOVE UPPER PORTION OF CLADDING AS REQUIRED TO REPAIR SLAB SOFFIT. REPLACE CLADDING AFTER COMPLETING CONCRETE REPAIRS.
7. CONTINUOUS SEALANT.
8. FINISHED PREFABRICATED METAL PANEL SECURED TO EXISTING CONCRETE SLAB WITH CONCEALED FASTENERS.
9. DIMENSION TO BE VERIFIED ON SITE BY CONTRACTOR.
10. COAT THE SLAB SOFFIT WITH A HIGH SOLIDS PROTECTIVE COATING MANUFACTURERED ESPECIALLY FOR COASTAL APPLICATIONS. COORDINATE COLOR WITH COR.

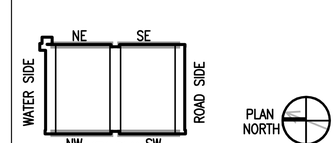

SYM	DESCRIPTION	DATE	APPR

NAVFAC

COMMONWEALTH OF VIRGINIA
JAMES HARRIS LOPER
Lic. No. 0402050404
8/29/2016
PROFESSIONAL ENGINEER
SEAL

JACOBS
1100 NORTH GLEBE ROAD SUITE 500
ARLINGTON, VIRGINIA 22201
TEL (571) 218-1000 FAX (571) 218-1800

A/E INFO

APPROVED

FOR COMMANDER NAVFAC

ACTIVITY

SATISFACTORY TO DATE

DES AG DRW YN CHK AG

BRANCH MANAGER

CHIEF ENG/ARCH

DEPARTMENT OF THE NAVY
NAVAL FACILITIES ENGINEERING COMMAND
THE NAVY YARD
NAVAL FACILITIES ENGINEERING COMMAND, WASHINGTON
WASHINGTON, D.C.
NAVAL AIR STATION – PAX RIVER
ST. MARY'S CO., MD.

HANGAR 111-HANGAR DOORS REPLACEMENT

OVERHANG REPAIR DETAILS

SCALE: VARIES

EPROJECT NO.: 1323946

CONSTR. CONTR. NO.

NAVFAC DRAWING NO. 13083198

SHEET 32 OF 35

S-402

DRAWFORM REVISION: 10 MARCH 2009

FILE NAME: C:\pwworking\gbno\tanudjih\d0896253\BLDG111-1323946-S402.dwg LAYOUT NAME: Layout1 PLOTTED: Thursday, August 18, 2016 - 11:48pm USER: TanudjiH

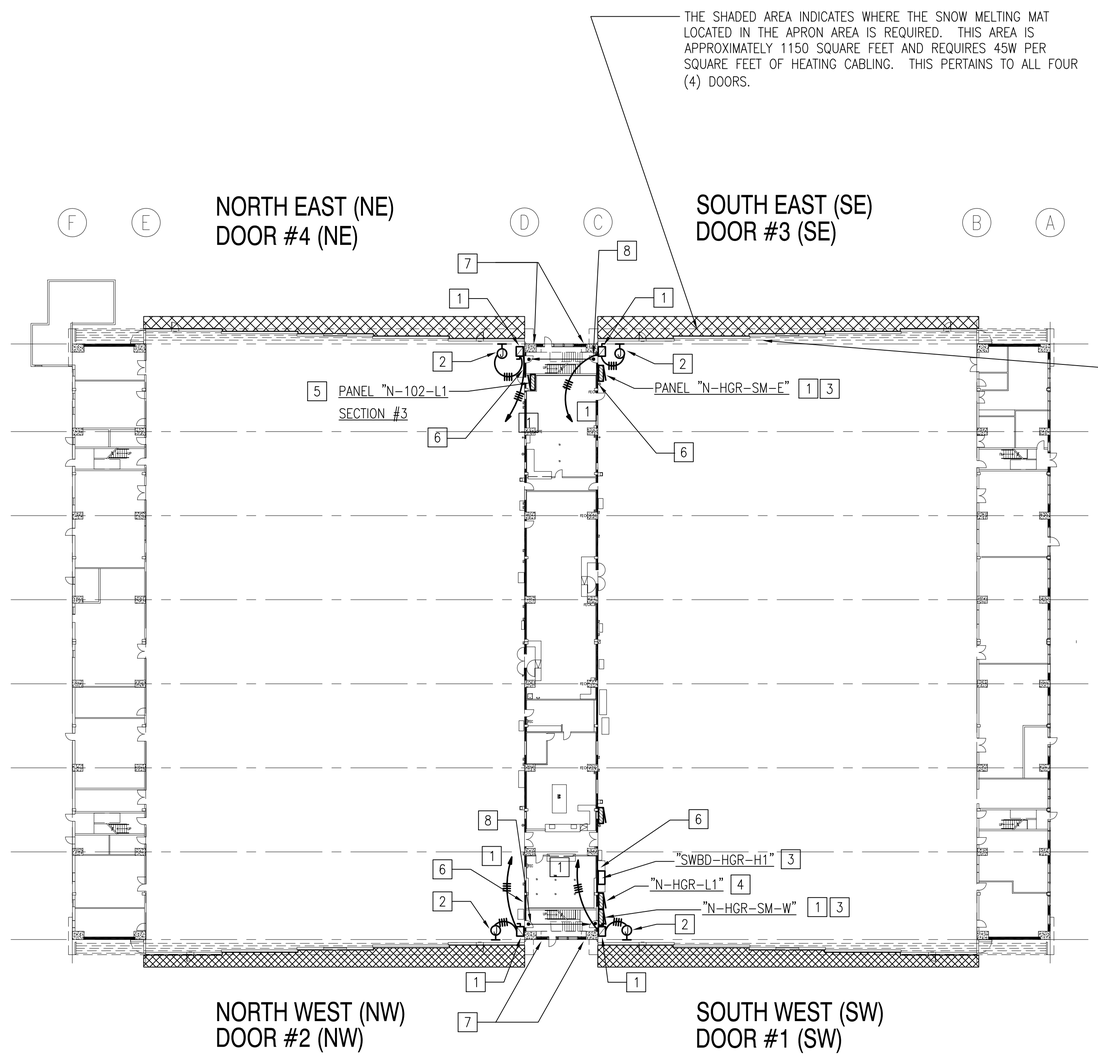

THE SHADED AREA INDICATES WHERE THE SNOW MELTING MAT LOCATED IN THE APRON AREA IS REQUIRED. THIS AREA IS APPROXIMATELY 1150 SQUARE FEET AND REQUIRES 45W PER SQUARE FEET OF HEATING CABLING. THIS PERTAINS TO ALL FOUR (4) DOORS.

HEATING CABLING IS REQUIRED BETWEEN THE RAIL OF THE SLIDING HANGAR DOOR. REFER TO ARCHITECTURAL AND STRUCTURAL DETAILS WHERE THE TYPE MI HEATING CABLING IS PERMITTED TO BE PLACED. THE LENGTH OF THE RAILS BEING HEATED IS APPROXIMATELY 160 FEET. THIS PERTAINS TO ALL FOUR (4) DOORS.

32' 16' 0 32'

SCALE: 1/32" = 1'-0"

PLAN NORTH

ELECTRICAL OVERALL FLOOR PLAN

SCALE: 1/32" = 1'-0"

GENERAL DEMOLITION NOTES

1. EXISTING CONTROLS, ALARMS, AND DEVICES ASSOCIATED WITH THE EXISTING DOORS SHALL BE DISCONNECTED AND REMOVED. THIS SHALL INCLUDE SURFACE MOUNTED CONDUIT, WIRING, AND JUNCTION BOXES. CONCEALED BOXES AND CONDUITS WITHIN MASONRY WALL SHALL BE ABANDONED AND BLANK COVER PLATES INSTALLED.
2. POWER BRANCH CIRCUIT CONDUIT, JUNCTION BOXES, SUPPORTS, AND CONDUCTORS SHALL BE REMOVED BACK TO PANEL FROM WHICH THEY ARE FED.
3. CIRCUITING SHOWN ON THE SNOW MELTING PANELS INDICATE HOW THE DESIGNER ANTICIPATES THAT LOAD TO BE CIRCUITED FOR THE NORTH AND SOUTH DOORS. CONTRACTOR MAY CHOOSE TO REWORK THAT PER THEIR PROPOSED HEATING CABLING LAYOUT TO MEET MAXIMUM HEATING CABLE RUNS. PANEL BREAKER RATINGS, QUANTITIES, ETC. CHANGES GENERATED BY THAT REWORK IS ACCEPTABLE, AS LONG AS THE CONTRACTOR COORDINATES THE PANEL WITH THE CABLE INSTALLATION.

GENERAL NOTES

1. POWER FROM THE LOAD SIDE OF THE 3P-30A, 480 VOLT DISCONNECT SHALL BE PROVIDED AS REQUIRED BY THE DOOR CONTRACTOR TO A LOCATION AT THE TOP OF THE DOOR AND INSTALL TO SUIT THE WIRING DISTRIBUTION REQUIRED TO SUPPORT THE DOOR SYSTEM OPERATION.
2. POWER AND CONTROL CABLING SHALL BE INSTALLED PER NEC, AND AS DESCRIBED IN THE STEEL DOOR SPECIFICATION.
3. REQUIRED ALARMS, REMOTE CONTROLS, SAFETY PROVISIONS, EXIT LIGHT ABOVE PEDESTRIAN DOORS, ETC. DESCRIBED IN THE SPECIFICATIONS SHALL BE THE RESPONSIBILITY OF THE DOOR CONTRACTOR TO FURNISH, INSTALL, AND TEST.
4. SHOP DRAWING APPROVAL OF PROPOSED INSTALLATION, POSITIONING OF ALL DEVICES/ALARMS, ELECTRICAL PANELS, CONTROLS PANELS, AND SCHEMATIC WIRING DIAGRAMS FOR EACH DOOR SHALL BE APPROVED PRIOR TO INSTALLATION.

KEY NOTES

1. NORTHEAST AND SOUTHEAST HANGAR DOORS SHALL BE FED FROM NEW PANEL "N-HGR-SM-E". NORTHWEST AND SOUTHWEST HANGAR DOORS SHALL BE FED FROM NEW PANEL "N-HGR-SM-W". EACH DOOR SHALL BE FED WITH A 30A/3 CIRCUIT BREAKER AND NEW FEEDER (4-#8 +#10G IN 1" RIGID STEEL CONDUIT) TO A 3P-30A, 480 VOLT, NON-FUSED, NEMA 1 ENCLOSED DISCONNECT. THE SWITCH SHALL BE INSTALLED APPROXIMATELY WHERE INDICATED, BUT THE CONTRACTOR SHALL COORDINATE THE FINAL LOCATION WITH EXISTING EQUIPMENT/DEVICES CURRENTLY LOCATED IN THAT IMMEDIATE AREA.
2. LOCAL DISCONNECTING MEANS FOR THE HANGAR DOOR SHALL BE AT +60" ABOVE THE HANGAR FLOOR LEVEL. INSTALL 4-#8+#10 CONDUCTORS IN A 1" RIGID STEEL CONDUIT UP TO A 6"x6"x4" DEEP NEMA 4 JUNCTION BOX AT A LOCATION DIRECTED BY THE DOOR MANUFACTURER. THE CONDUCTORS IN THE BOX WILL TRANSITION TO MULTI-CONDUCTOR POWER RATED CORD, WHICH THE DOOR CONTRACTOR SHALL WIRE TO THE DOOR CONTROL PANEL(S).
3. NEW PANELS "N-HGR-SM-E" AND "N-HGR-SM-W" SHALL EACH BE WIRED FROM NEW 300A/3 CIRCUIT BREAKERS INSTALLED IN EXISTING "SWBD-HGR-H1" AND PROVIDED WITH A 4-350 KCMIL + #2G IN 3" RIGID STEEL CONDUIT FEEDER.
4. EACH OF THE SNOW MELTING CONTROL PANELS ON THE WEST SHALL BE PROVIDED WITH A NEW 20A/1 CIRCUIT BREAKER INSTALLED IN EXISTING PANEL "N-HGR-L1" AND A 2-#12+#12G IN 3/4" RIGID STEEL CONDUIT BRANCH CIRCUIT.
5. EACH OF THE SNOW MELTING CONTROL PANELS ON THE EAST SHALL BE WIRED TO EXISTING SPARE 20A/1 CIRCUIT BREAKER IN EXISTING PANEL "N-102-L1, SECTION 3" AND A 2-#12+#12G IN 3/4" RIGID STEEL CONDUIT BRANCH CIRCUIT.
6. CONTRACTOR SHALL PROVIDE THE SNOW MELTING CONTROL AND ASSOCIATED RELAYING PANEL(S) INSIDE THE HANGAR APPROXIMATELY AT THIS LOCATION.
7. EXTERIOR EQUIPMENT REQUIRED FOR TRANSITION FROM 277 VOLT BRANCH CIRCUIT FROM THE RELAY PANEL(S) TO HEATING CABLES SHALL BE INSTALLED APPROXIMATELY AT THIS LOCATION. THE 277V BRANCH CIRCUIT WIRING FROM THE RELAY PANEL(S) TO TRANSITION NEMA 4 RATED PULL BOXES OR TROUGH SHALL BE ROUTED IN RIGID STEEL CONDUIT(S). TO PASS THROUGH THE HANGAR DOOR THE ARCHITECT HAS DETAILED PENETRATION LOCATION(S). CONDUIT(S) ON THE EXTERIOR SHALL BE RUN EXPOSED ON THE STAIR WALL AND DROP DOWN TO THE PULL BOXES/TROUGH AT +24" ABOVE THE APRON GRADE.
8. LOCATED IN THE STAIR AT THE EAST AND WEST END OF THE CENTER LEAN-TO, THERE ARE EXIT LIGHTS AT EACH DOOR. THE CONTRACTOR SHALL EXTEND THE 277 VOLT BRANCH CIRCUIT SERVING THOSE STAIRS OUT TO THE HANGAR DOORS TO POWER THE EXITS LIGHTS THAT ARE MOUNTED ABOVE THE PEDESTRIAN EXIT DOORS. THE CIRCUIT SHALL BE WIRED TO A JUNCTION BOX WITHIN THE HANGER AND EXTENDED IN RIGID STEEL CONDUIT UP TO THE SAME LOCATION THE POWER TO THE DOOR IS PROVIDED. THE DOOR CONTRACTOR SHALL EXTEND THE LIGHTING CIUIT (2-#12+#12G) TO THE DOOR CONTROL PANEL. THE EXITS SIGNS IN EACH DOOR SHALL BE WIRED SUCH THAT THEY ARE ENERGIZED WHEN THE HANGAR DOORS ARE IN THE CLOSED POSITION. WHEN THE DOORS ARE FOLDED BACK INTO THE OPEN POSITION, POWER TO THE BATTERY BACK-UP POWER PACK WILL REMAIN POWERED, BUT POWER TO THE LED LAMP SHALL BE OFF. DOOR MANUFACTURER SHALL BE RESPONSIBLE FOR INSTALLING THE CIRCUITRY FOR THESE LIGHTS FROM THE CONTROL PANEL.

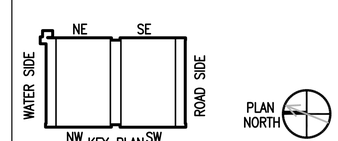

KEY PLAN

PLAN NORTH

SYM	DESCRIPTION	DATE	APPR
	FINAL SUBMISSION	8/24/16	

NAVFAC

SEAL

JACOBS
1100 NORTH GLEBE ROAD SUITE 500
ARLINGTON, VIRGINIA 22201
TEL (571) 218-1000 FAX (571) 218-1600

A/E INFO

APPROVED

FOR COMMANDER NAVFAC

ACTIVITY

SATISFACTORY TO DATE

DES	DRW	CHK
AG	YN	AG

<<PM/DM>> ----

BRANCH MANAGER --

CHIEF ENG/ARCH ---

<<-->> --

DEPARTMENT OF THE NAVY
NAVAL FACILITIES ENGINEERING COMMAND
THE NAVY YARD WASHINGTON, D.C.
NAVAL FACILITIES ENGINEERING COMMAND, WASHINGTON
NAVAL AIR STATION - PAX RIVER ST. MARY'S CO., MD.

HANGAR 111-HANGAR DOORS REPLACEMENT

ELECTRICAL OVERALL FLOOR PLAN

SCALE 1/32" = 1'-0"

EPROJECT NO. 1323946

CONSTR. CONTR. NO. -

NAVFAC DRAWING NO. 13083199

SHEET 33 OF 35

E-101

DRAWFORM REVISION: 10 MARCH 2009

FILE NAME: C:\pwworking\gbno\cmilj1\d0896260\BLDG111-1323946-E101.dwg LAYOUT NAME: Layout1 PLOTTED: Wednesday, August 17, 2016 - 9:38am USER: ONeilu1

KEY NOTES

1. NORTHEAST, NORTHWEST, SOUTHEAST, AND SOUTHWEST HANGAR DOORS SHALL BE WIRED FROM NEW 30A/3 CIRCUIT BREAKERS INSTALLED IN NEW SNOW MELTING PANELS "N-HGR-SM-E" AND "N-HGR-SM-W". A NEW FEEDER (4-#8 +#10G IN 1" RIGID STEEL CONDUIT) SHALL BE INSTALLED TO THE 3P-30A, 480 VOLT, NON-FUSED, NEMA 1 ENCLOSED DISCONNECT.
2. SNOW MELTING PANELS "N-HGR-SM-E" AND "N-HGR-SM-W" SHALL EACH BE WIRED FROM NEW 300A/3 CIRCUIT BREAKERS INSTALLED IN EXISTING 480/277 VOLT, 3-PHASE, 4-WIRE, "SWBD-HGR-H1". WITH A 4-350 KCMIL + #2G IN 3" RIGID STEEL CONDUIT.
3. NEW EQUIPMENT AND FEEDER/BRANCH CIRCUIT WIRING IS INDICATED AS "BOLD". SEE PANEL SCHEDULES FOR BREAKER REQUIREMENTS.

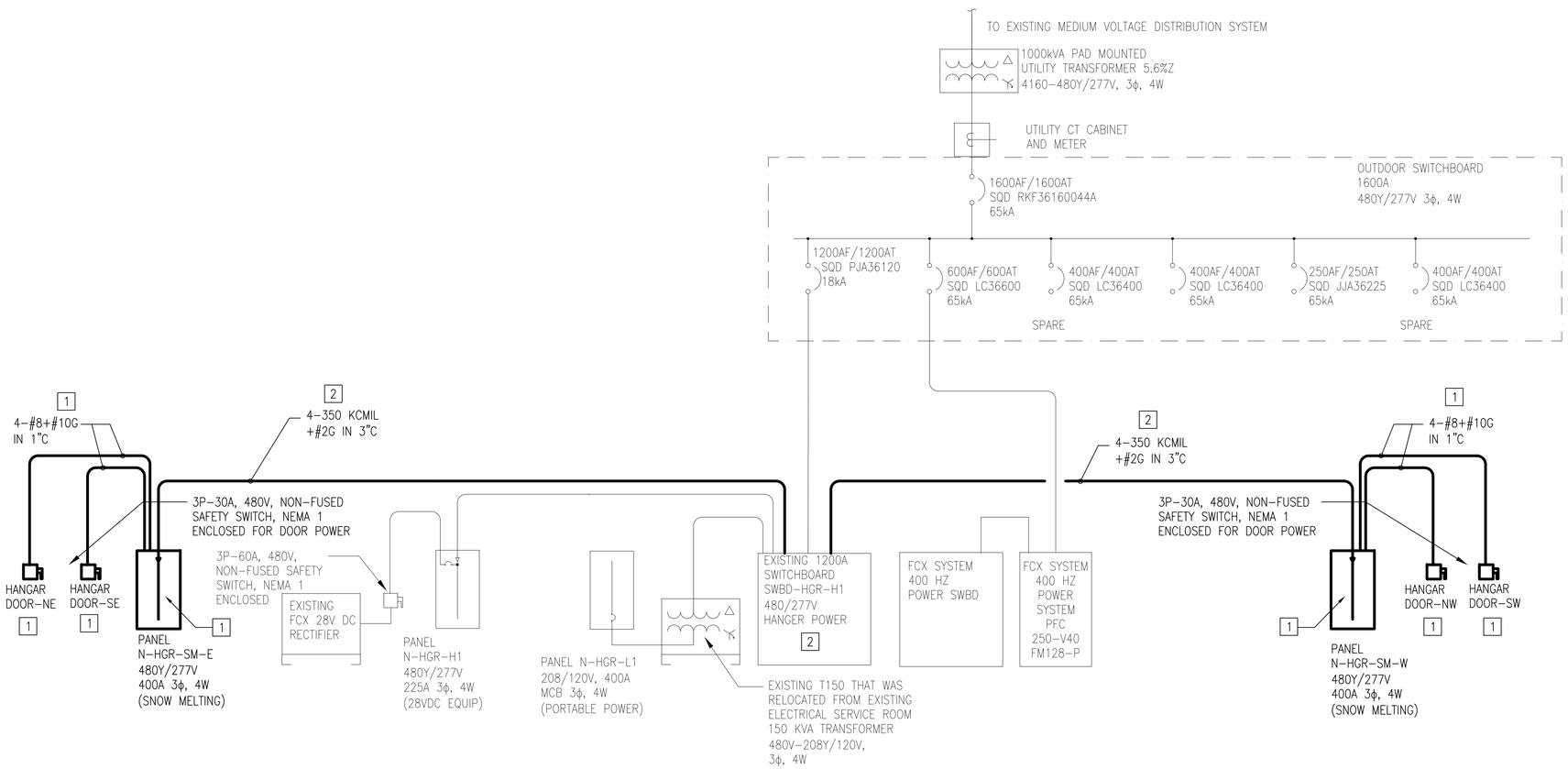

CENTER LEAN-TO MODIFIED ONE LINE DIAGRAM

SCALE: NONE

E-601 A2

SYM	DESCRIPTION	DATE	APPR
	FINAL SUBMISSION	8/24/16	

NAVFAC

STATE OF MARYLAND — LARISSA D'ANTI — REGISTERED PROFESSIONAL ENGINEER

SEAL

JACOBS
1100 NORTH GLEBE ROAD SUITE 500
ARLINGTON, VIRGINIA 22201
TEL (571) 218-1000 FAX (571) 218-1600

A/E INFO

APPROVED

FOR COMMANDER NAVFAC

ACTIVITY

SATISFACTORY TO DATE

DES JAO DRW JAO CHK BM

<<PM/DM>> ----

BRANCH MANAGER --

CHIEF ENG/ARCH ---

<<-->> --

DEPARTMENT OF THE NAVY
NAVAL FACILITIES ENGINEERING COMMAND
THE NAVY YARD WASHINGTON, D.C.

NAVAL FACILITIES ENGINEERING COMMAND, WASHINGTON

NAVAL AIR STATION - PAX RIVER ST. MARY'S CO., MD.

HANGAR 111-HANGAR DOORS REPLACEMENT

CENTER LEAN-TO MODIFIED ONE LINE DIAGRAM

SCALE: NOT TO SCALE

EPROJECT NO.: 1323946

CONSTR. CONTR. NO. -

NAVFAC DRAWING NO. 13083200

SHEET 34 OF 35

E-601

DRAWFORM REVISION: 10 MARCH 2009

FILE NAME: C:\pwworking\pbre\oneilj1\d0896260\BLDG111-1323946-E601.dwg LAYOUT NAME: Layout1 PLOTTED: Wednesday, August 17, 2016 - 9:40am USER: ONeilJ1

[2]

PROJECT: Hangar 111 PAX River | PANEL VOLTAGE: 480/277V | AIC RATING: 14,000
PANEL: **N-HGR-SM-E (NEW)** | PHASE & WIRE: 3PH,4W | MOUNTING: SURFACE
LOCATION: 1st Floor Roadside Hanger | BUS/MAIN (AMPS): 400A MLO | NOTE:

CKT	OCD			LOAD (KVA)			3 PH SEQUENCE			LOAD (KVA)				OCD		CKT
NO.	A	P	DESCRIPTION	MISC	REC	LTG	A	B	C	MISC	REC	LTG	DESCRIPTION	A	P	NO.
1	20	1	SNOW MELTING NE MAT #1	3.5			7.0			3.5			SNOW MELTING NE MAT #2	20	1	2
3	20	1	SNOW MELTING NE MAT #3	3.5				7.0		3.5			SNOW MELTING NE MAT #4	20	1	4
5	20	1	SNOW MELTING NE MAT #5	3.5					7.0	3.5			SNOW MELTING NE MAT #6	20	1	6
7	20	1	SNOW MELTING NE MAT #7	3.5			7.0			3.5			SNOW MELTING NE MAT #8	20	1	8
9	20	1	SNOW MELTING NE MAT #9	3.5				7.0		3.5			SNOW MELTING NE MAT #10	20	1	10
11	20	1	SNOW MELTING NE MAT #11	3.5					7.0	3.5			SNOW MELTING NE MAT #12	20	1	12
13	20	1	SNOW MELTING NE MAT #13	3.5			7.0			3.5			SNOW MELTING NE MAT #14	20	1	14
15	20	1	SNOW MELTING NE MAT #15	3.5				7.5		4.0			SNOW MELTING NE RAIL #1	20	1	16
17	20	1	SNOW MELTING NE RAIL #2	4.0					8.0	4.0			SNOW MELTING NE RAIL #3	20	1	18
19	20	1	SNOW MELTING NE RAIL #4	4.0			8.0			4.0			SNOW MELTING NE RAIL #5	20	1	20
21	20	1	SNOW MELTING SE MAT #1	3.5				7.0		3.5			SNOW MELTING SE MAT #2	20	1	22
23	20	1	SNOW MELTING SE MAT #3	3.5					7.0	3.5			SNOW MELTING SE MAT #4	20	1	24
25	20	1	SNOW MELTING SE MAT #5	3.5			7.0			3.5			SNOW MELTING SE MAT #6	20	1	26
27	20	1	SNOW MELTING SE MAT #7	3.5				7.0		3.5			SNOW MELTING SE MAT #8	20	1	28
29	20	1	SNOW MELTING SE MAT #9	3.5					7.0	3.5			SNOW MELTING SE MAT #10	20	1	30
31	20	1	SNOW MELTING SE MAT #11	3.5			7.0			3.5			SNOW MELTING SE MAT #12	20	1	32
33	20	1	SNOW MELTING SE MAT #13	3.5				7.0		3.5			SNOW MELTING SE MAT #14	20	1	34
35	20	1	SNOW MELTING SE MAT #15	3.5					7.5	4.0			SNOW MELTING SE RAIL #1	20	1	36
37	20	1	SNOW MELTING SE RAIL #2	4.0			8.0			4.0			SNOW MELTING SE RAIL #3	20	1	38
39	20	1	SNOW MELTING SE RAIL #4	4.0				8.0		4.0			SNOW MELTING SE RAIL #5	20	1	40
41	20	1	SPARE						0.0				SPARE	20	1	42
43		1	SPACE				0.0						SPARE	20	1	44
45		1	SPACE					0.0					SPARE	20	1	46
47		1	SPACE						0.0				SPARE	20	1	48
49	30	3	SPARE				0.0						SPACE		1	50
51	--	--	---					0.0					SPACE		1	52
53	--	--	---						0.0				SPACE		1	54
55	30	3	NE HANGAR DOOR	2.7			5.3			2.7			SE HANGAR DOOR	30	3	56
57	--	--	(TWO 3HP MOTORS)	2.7				5.3		2.7			(TWO 3HP MOTORS)	--	--	58
59	--	--	---	2.7					5.3	2.7			---	--	--	60
CONNECTED LOAD (KVA)				80.0	0.0	0.0	56.3	55.8	48.8	81.0	0.0	0.0				
TOTAL CONNECTED LOAD (KVA)				161.00	0.00	0.00										
DEMAND FACTOR (SEE BELOW)				1.00	---	1.00							TOTAL DEMAND (KVA)	161		
TOTAL DEMAND LOAD (KVA)				161.00	0.00	0.00							LINE CURRENT (AMPS)	194		

[2]

PROJECT: Hangar 111 PAX River | PANEL VOLTAGE: 480/277V | AIC RATING: 14,000
PANEL: **N-HGR-SM-W (NEW)** | PHASE & WIRE: 3PH,4W | MOUNTING: SURFACE
LOCATION: 1st Floor Roadside Hanger | BUS/MAIN (AMPS): 400A MLO | NOTE:

CKT	OCD			LOAD (KVA)			3 PH SEQUENCE			LOAD (KVA)				OCD		CKT
NO.	A	P	DESCRIPTION	MISC	REC	LTG	A	B	C	MISC	REC	LTG	DESCRIPTION	A	P	NO.
1	20	1	SNOW MELTING NW MAT #1	3.5			7.0			3.5			SNOW MELTING NW MAT #2	20	1	2
3	20	1	SNOW MELTING NW MAT #3	3.5				7.0		3.5			SNOW MELTING NW MAT #4	20	1	4
5	20	1	SNOW MELTING NW MAT #5	3.5					7.0	3.5			SNOW MELTING NW MAT #6	20	1	6
7	20	1	SNOW MELTING NW MAT #7	3.5			7.0			3.5			SNOW MELTING NW MAT #8	20	1	8
9	20	1	SNOW MELTING NW MAT #9	3.5				7.0		3.5			SNOW MELTING NW MAT #10	20	1	10
11	20	1	SNOW MELTING NW MAT #11	3.5					7.0	3.5			SNOW MELTING NW MAT #12	20	1	12
13	20	1	SNOW MELTING NW MAT #13	3.5			7.0			3.5			SNOW MELTING NW MAT #14	20	1	14
15	20	1	SNOW MELTING NW MAT #15	3.5				7.5		4.0			SNOW MELTING NW RAIL #1	20	1	16
17	20	1	SNOW MELTING NW RAIL #1,2	4.0					8.0	4.0			SNOW MELTING NW RAIL #3	20	1	18
19	20	1	SNOW MELTING NW RAIL #3,4	4.0			8.0			4.0			SNOW MELTING NW RAIL #5	20	1	20
21	20	1	SNOW MELTING SW MAT #1	3.5				7.0		3.5			SNOW MELTING SW MAT #2	20	1	22
23	20	1	SNOW MELTING SW MAT #3	3.5					7.0	3.5			SNOW MELTING SW MAT #4	20	1	24
25	20	1	SNOW MELTING SW MAT #5	3.5			7.0			3.5			SNOW MELTING SW MAT #6	20	1	26
27	20	1	SNOW MELTING SW MAT #7	3.5				7.0		3.5			SNOW MELTING SW MAT #8	20	1	28
29	20	1	SNOW MELTING SW MAT #9	3.5					7.0	3.5			SNOW MELTING SW MAT #10	20	1	30
31	20	1	SNOW MELTING SW MAT #11	3.5			7.0			3.5			SNOW MELTING SW MAT #12	20	1	32
33	20	1	SNOW MELTING SW MAT #13	3.5				7.0		3.5			SNOW MELTING SW MAT #14	20	1	34
35	20	1	SNOW MELTING SW MAT #15	3.5					7.5	4.0			SNOW MELTING SW RAIL #1	20	1	36
37	20	1	SNOW MELTING SW RAIL #2	4.0			8.0			4.0			SNOW MELTING SW RAIL #3	20	1	38
39	20	1	SNOW MELTING SW RAIL #	4.0				8.0		4.0			SNOW MELTING SW RAIL #5	20	1	40
41	20	1	SPARE						0.0				SPARE	20	1	42
43		1	SPACE				0.0						SPARE	20	1	44
45		1	SPACE					0.0					SPARE	20	1	46
47		1	SPACE						0.0				SPARE	20	1	48
49	30	3	SPARE				0.0						SPACE		1	50
51	--	--	---					0.0					SPACE		1	52
53	--	--	---						0.0				SPACE		1	54
55	30	3	NW HANGAR DOOR	2.7			5.3			2.7			SW HANGAR DOOR	30	3	56
57	--	--	(TWO 3HP MOTORS)	2.7				5.3		2.7			(TWO 3HP MOTORS)	--	--	58
59	--	--	---	2.7					5.3	2.7			---	--	--	60
CONNECTED LOAD (KVA)				80.0	0.0	0.0	56.3	55.8	48.8	81.0	0.0	0.0				
TOTAL CONNECTED LOAD (KVA)				161.00	0.00	0.00										
DEMAND FACTOR (SEE BELOW)				1.00	---	1.00							TOTAL DEMAND (KVA)	161		
TOTAL DEMAND LOAD (KVA)				161.00	0.00	0.00							LINE CURRENT (AMPS)	194		

[2]

PROJECT: Hangar 111 PAX River | PANEL VOLTAGE: 480Y/277V | AIC RATING: 25,000
PANEL: **SWBD-HGR-H1** | PHASE & WIRE: 3PH,4W | MOUNTING: Floor
LOCATION: Roadside Hangar 1st Floor | BUS/MAIN (AMPS): 1200A MLO | NOTE: SURGE PROTECTED SWITCHBOARD

CKT	OCD			LOAD (KVA)			3 PH SEQUENCE			LOAD (KVA)				OCD		CKT	
NO.	A	P	DESCRIPTION	MISC	REC	LTG	A	B	C	MISC	REC	LTG	DESCRIPTION	A	P	NO.	
1	400	3	480V Portable Equipment #1	75.0			150.0			75.0			480V Portable Equipment #2	400	3	2	
3	--	--	---	75.0				150.0		75.0			---	--	--	4	
5	--	--	---	75.0					150.0	75.0			---	--	--	6	
7	400	3	480V Portable Equipment #3	75.0			150.0			75.0			480V Portable Equipment #4	400	3	8	
9	--	--	---	75.0				150.0		75.0			---	--	--	10	
11	--	--	---	75.0					150.0	75.0			---	--	--	12	
13	400	3	480V Portable Equipment #5	75.0			150.0			75.0			480V Portable Equipment #6	400	3	14	
15	--	--	---	75.0				150.0		75.0			---	--	--	16	
17	--	--	---	75.0					150.0	75.0			---	--	--	18	
19	400	3	480V Portable Equipment #7	75.0			215.0			140.0			Panel N-HGR-L1	225	3	20	
21	--	--	---	75.0				215.0		140.0	0.0	0.0	(150 KVA Transformer)	--	--	22	
23	--	--	---	75.0					215.0	140.0			---	--	--	24	
25	225	3	Panel N-HGR-H1	61.3			70.8			9.4			Existing Air Compressor (25 HP)	50	3	26	
27	--	--	---	61.3	0.0	0.0		70.8		9.4			---	--	--	28	
29	--	--	---	61.3					70.8	9.4			---	--	--	30	
31	30	3	Existing Air Compressor (15 HP)	5.8			59.5			**53.7**			**N-HGR-SM-E**	**300**	**3**	32	[3]
33	--	--	---	5.8				59.5		**53.7**			**---**	**--**	**--**	34	
35	--	--	---	5.8					59.5	**53.7**			**---**	**--**	**--**	36	
37		3	SPACE				53.7			**53.7**			**N-HGR-SM-W**	**300**	**3**	38	[3]
39	--	--	---					53.7		**53.7**			**---**	**--**	**--**	40	
41	--	--	---						53.7	**53.7**			**---**	**--**	**--**	42	
CONNECTED LOAD (KVA)				1101.5	0.0	0.0	848.9	848.9	848.9	1445.3	0.0	0.0					
TOTAL CONNECTED LOAD (KVA)				2546.8	0.0	0.0											
DEMAND FACTOR (SEE BELOW)				0.4	---	1.00							TOTAL DEMAND (KVA)	1019			
TOTAL DEMAND LOAD (KVA)				1018.7	0.0	0.0							LINE CURRENT (AMPS)	1225			

KEY NOTES

[1] NORTHEAST, NORTHWEST, SOUTHEAST, AND SOUTHWEST HANGAR DOORS SHALL BE WIRED FROM NEW 30A/3 CIRCUIT BREAKERS INSTALLED IN NEW SNOW MELTING PANELS "N-HGR-SM-E" AND "N-HGR-SM-W". A NEW FEEDER (4-#8 +#10G IN 1" RIGID STEEL CONDUIT) SHALL BE INSTALLED TO THE 3P-30A, 480 VOLT, NON-FUSED, NEMA 1 ENCLOSED DISCONNECT.

[2] SNOW MELTING PANELS "N-HGR-SW-E" AND "N-HGR-SW-W" SHALL EACH BE WIRED FROM NEW 300A/3 CIRCUIT BREAKERS INSTALLED IN EXISTING 480/277 VOLT, 3-PHASE, 4-WIRE, "SWBD-HGR-H1". WITH A 4-350 KCMIL + #2G IN 3" RIGID STEEL CONDUIT.

[3] NEW BREAKERS INSTALLED IN EXISTING DISTRIBUTION EQUIPMENT ARE INDICATED IN "BOLD". THESE BREAKERS SHALL MATCH THE EXISTING BREAKER IN THAT EQUIPMENT IN BOTH TYPE AND AIC RATING.

SYM	DESCRIPTION	DATE	APPR
	FINAL SUBMISSION	8/24/16	

JACOBS

A/E INFO

APPROVED

FOR COMMANDER NAVFAC

ACTIVITY -----

SATISFACTORY TO DATE

DES JAO | DRW JAO | CHK BM

<<PM/DM>> ----

BRANCH MANAGER --

CHIEF ENG/ARCH ---

<<-->> --

DEPARTMENT OF THE NAVY
NAVAL FACILITIES ENGINEERING COMMAND
NAVAL FACILITIES ENGINEERING COMMAND, WASHINGTON
THE NAVY YARD WASHINGTON, D.C.

NAVAL AIR STATION – PAX RIVER ST. MARY'S CO., MD.

HANGAR 111-HANGAR DOORS REPLACEMENT

PANEL SCHEDULES

SCALE: NOT TO SCALE

EPROJECT NO.: 1323946

CONSTR. CONTR. NO. -

NAVFAC DRAWING NO. 13083201

SHEET 35 OF 35

E-701

DRAWFORM REVISION: 10 MARCH 2009