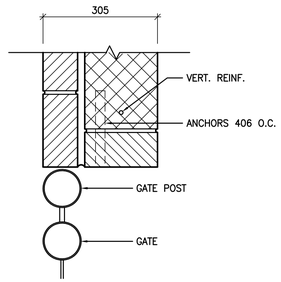

5 A108 **DOOR JAMB** SCALE 1:7.5

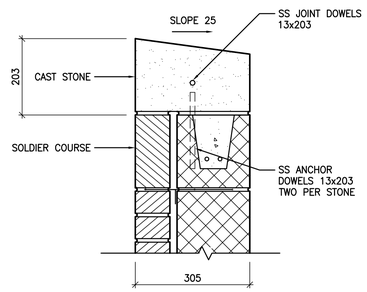

4 A108 **CORING DETAIL** SCALE 1:7.5

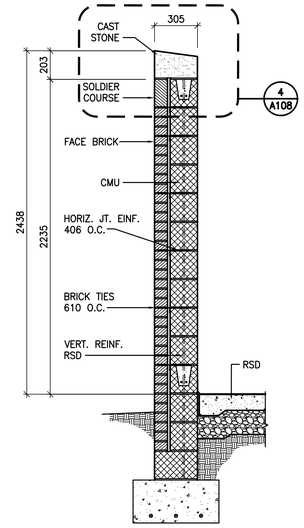

3 A108 **TYP. SECTION** SCALE 1:20

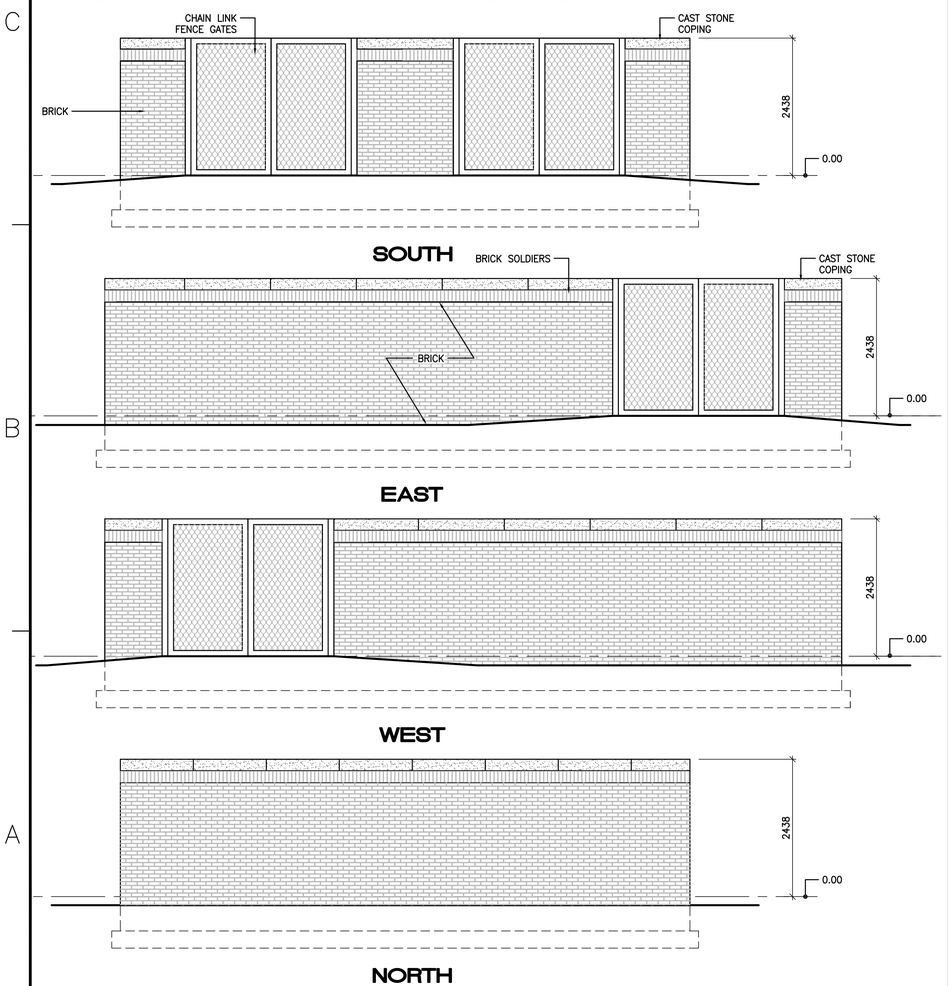

2 A108 **ELEVATIONS** SCALE 1:50

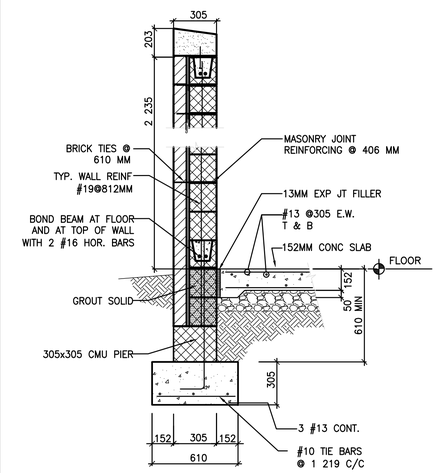

SCALE 1:20

6 A108 **WALL REINFORCEMENT DETAIL FOR CHILLER ENCLOSURE**

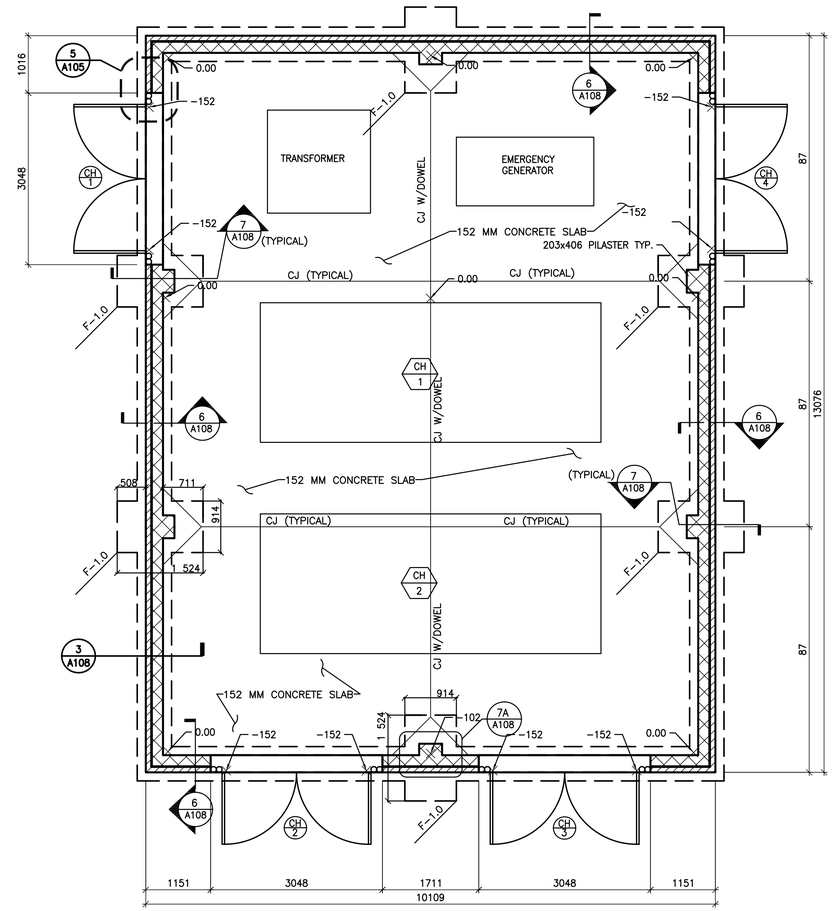

FOOTING SCHEDULE			
MARK	SIZE	DEPTH	REINF.
F-1.0	914x1 524	305	6 #16 EW

1 A108 **PLAN OF CHILLER ENCLOSURE** SCALE 1:50

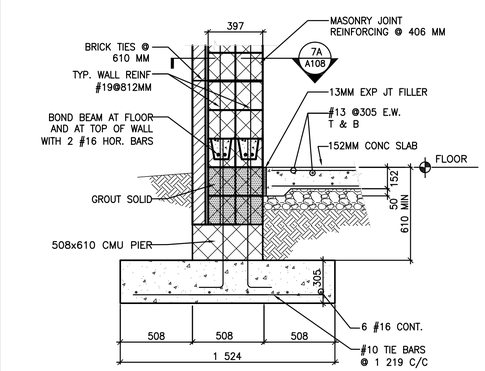

7 A108 **WALL REINFORCEMENT DETAIL FOR CHILLER ENCLOSURE** SCALE 1:20

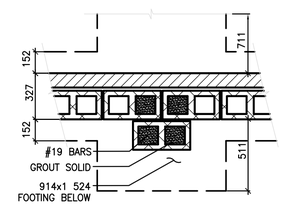

7A- TWO-UNIT PILASTER DETAIL

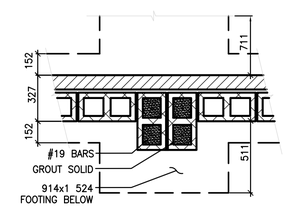

7B- ALTERNATIVE TWO-UNIT PILASTER DETAIL

0 150 300 600 SCALE 1:7.5

0 400 800 1600 SCALE 1:20

0 1M 2M 4M SCALE 1:50

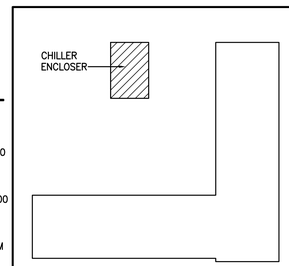

KEY PLAN NO SCALE

SYM	DESCRIPTION	DATE	APPR.
	ISSUED FOR CONSTRUCTION	10/09/09	

NAVFAC

COMMONWEALTH OF VIRGINIA — CONSTANTINE N. KATSIKOPOULOS — 020518 — ARCHITECT — SEAL

JOHN C. GRIMBERG CO. INC. ENGINEERS CONTRACTORS — JGC

JOE DUDA
FIRM MEMBER DATE :

SUBMITTED BY
ALPHATEC PC ENGINEERS, ARCHITECTS, PLANNERS
P. GIANNIOTIS, PE
FIRM MEMBER DATE :

APPROVED
ACTIVITY – SATISFACTORY TO DATE

APPROVED
FOR COMMANDER NAVFAC DATE

DES	DR
CHK	QC
DESIGNER	
REVIEWED BY	
QC	
AIC/EIC	
FIRE PROTECTION	
BRANCH MANAGER	
DESIGN DIRECTOR	

NAVAL FACILITIES ENGINEERING COMMAND
IPT GOLD

DEPARTMENT OF THE NAVY
NAVAL FACILITIES ENGINEERING COMMAND WASHINGTON
WASHINGTON NAVY YARD, WASHINGTON
MARINE CORPS BASE QUANTICO, VIRGINIA
MSG BATTALION HQ & BEQ, PHASE 1 (P-545)

PLAN OF CHILLER ENCLOSURE, ELEVATIONS, DETAILS AND TYP. SECTION

CODE ID. NO. 80091	SIZE D
SCALE:	AS SHOWN
AGENCY NO.	
JOB ORDER NO.	
SPEC. NO.	
CONSTR. CONTR. NO.	N40080-08-R-611465
NAVFAC DRAWING NO.	13016495
SHEET	39 OF 140

A108

DRAWFORM REVISION: 01 AUGUST 2004

I:\08-pri-006 msg\cad drawings\CAD Dwgs\CD\08-PRI-006-FA0C.dwg, 10/9/2009 11:17:21 AM, btw081