HALEY & ALDRICH — TEST BORING REPORT

Boring No. HA10

Project P125 Temporary Medical Facilities, WRNMMC; Bethesda, Maryland
Client HDR, Inc.
Contractor Free State Drilling, Inc.

File No. 39592-000
Sheet No. 1 of 1
Start 9 February 2013
Finish 9 February 2013
Driller J. Scribelito, Jr.
H&A Rep. D. Masso
Elevation 297.5 (est.)
Datum NAVD 88
Location See Plan

	Casing	Sampler	Barrel	Drilling Equipment and Procedures
Type	HSA	S	--	Rig Make & Model: CME 55
Inside Diameter (in.)	3.75	2.25	--	Bit Type:
Hammer Weight (lb)	140	--	-	Drill Mud: None
Hammer Fall (in.)	30	--	-	Casing:
				Hoist/Hammer: Winch / Automatic Hammer
				PID Make & Model: N/A

Depth (ft)	Sampler Blows per 6 in.	Sample No. & Rec. (in.)	Sample Depth (ft)	Stratum Change Elev/Depth (ft)	USCS Symbol	VISUAL-MANUAL IDENTIFICATION AND DESCRIPTION (Density/consistency, color, GROUP NAME, max. particle size*, structure, odor, moisture, optional descriptions GEOLOGIC INTERPRETATION)
0				297.1 0.4		5" ASPHALT
				296.5 1.0		7" GRAVEL BASE
	4 4 7 7	S1 20	1.0 3.0		ML	Stiff red-brown SILT with sand (ML), mps 1 mm, no odor, moist -PROBABLE FILL-
	7 7 10 13	S2 24	3.0 5.0	294.5 3.0	ML	Similar to S1, except very stiff, weak relict rock fabric visible
	20 32 44 36	S3 24	5.0 7.0	292.5 5.0	ML	Similar to S2, except hard
					ML	Hard tan/yellow-brown sandy SILT (ML), mps 2 mm, no odor, dry, relict rock structure visible, decomposed bedrock crumbles to silt with slight pressure
	10 32 50/3"	S4 15	7.0 8.3		ML	Similar to S3
5	50/5"	S5 5	9.0 9.4		ML	Similar to S3
10	26 50/5"	S6 11	13.5 14.4		ML	Similar to S3
15	50/4"	S7 4	18.5 18.9	278.6 18.9	ML	Similar to S3
						Bottom of Exploration at 18.9 ft
20						

Water Level Data					
Date	Time	Elapsed Time (hr.)	Depth (ft) to: Bottom of Casing	Bottom of Hole	Water
2/9/13	14:20	3	--	11.65	DRY

Sample ID: O - Open End Rod; T - Thin Wall Tube; U - Undisturbed Sample; S - Split Spoon Sample

Well Diagram: Riser Pipe; Screen; Filter Sand; Cuttings; Grout; Concrete; Bentonite Seal

Summary	
Overburden (ft)	18.9
Rock Cored (ft)	0.0
Samples	7S
Boring No.	**HA10**

Field Tests: Dilatancy: R - Rapid S - Slow N - None; Toughness: L - Low M - Medium H - High; Plasticity: N - Nonplastic L - Low M - Medium H - High; Dry Strength: N - None L - Low M - Medium H - High V - Very High

*Note: Maximum particle size is determined by direct observation within the limitations of sampler size.

Note: Soil identification based on visual-manual methods of the USCS as practiced by Haley & Aldrich, Inc.

HA-TEST BORING-01 | HAR HA-ABER-01.GLB | HA-TB-CORE-WELL-01.GDT | G:\GINTD\WASHINGTON DC\39592-000\39592-000_TEST BORING_HA10-HA11 (2).GPJ | 18 Feb 13

HALEY & ALDRICH — TEST BORING REPORT

Boring No. HA11

Project P125 Temporary Medical Facilities, WRNMMC; Bethesda, Maryland
Client HDR, Inc.
Contractor Free State Drilling, Inc.

File No. 39592-000
Sheet No 1 of 2
Start 9 February 2013
Finish 9 February 2013
Driller J. Scribelito, Jr.
H&A Rep D. Masso
Elevation 294.0 (est.)
Datum NAVD 88
Location See Plan

	Casing	Sampler	Barrel	Drilling Equipment and Procedures
Type	HSA	S	--	Rig Make & Model: CME 55
Inside Diameter (in.)	3.75	2.25	--	Bit Type:
Hammer Weight (lb)	140	--	-	Drill Mud: None
Hammer Fall (in.)	30	--	-	Casing:
				Hoist/Hammer: Winch / Automatic Hammer
				PID Make & Model: N/A

Depth (ft)	Sampler Blows per 6 in.	Sample No. & Rec. (in.)	Sample Depth (ft)	Stratum Change Elev/Depth (ft)	USCS Symbol	VISUAL-MANUAL IDENTIFICATION AND DESCRIPTION (Density/consistency, color, GROUP NAME, max. particle size*, structure, odor, moisture, optional descriptions GEOLOGIC INTERPRETATION)
0				293.6 0.4		5" ASPHALT
				293.0 1.0		7" GRAVEL BASE
	6 6 6 7	S1 20	1.0 3.0		ML	Stiff red-brown SILT with sand (ML), mps 4 mm, no odor, moist -PROBABLE FILL-
	13 5 10 12	S2 24	3.0 5.0	290.5 3.5	ML	Similar to S1
					ML	Very stiff, tan/yellow-brown SILT with sand (ML), mps 1 mm, no odor, dry, relict rock structure crumbles to silt with slight pressure
5	15 11 13 13	S3 15	5.0 7.0		ML	Similar to S2
	5 14 18 34	S4 24	7.0 9.0		ML	Similar to S2, except hard
	42 50/5"	S5 11	9.0 9.9		ML	Similar to S2, except hard
10						
15	9 9 14	S6 18	13.5 15.0		ML	Similar to S2
20	11 21 29	S7 14	18.5 20.0		ML	Similar to S2, except hard

Water Level Data					
Date	Time	Elapsed Time (hr.)	Depth (ft) to: Bottom of Casing	Bottom of Hole	Water
2/9/13	15:30	5	--	19.1	DRY

Sample ID: O - Open End Rod; T - Thin Wall Tube; U - Undisturbed Sample; S - Split Spoon Sample

Well Diagram: Riser Pipe; Screen; Filter Sand; Cuttings; Grout; Concrete; Bentonite Seal

Summary	
Overburden (ft)	29.9
Rock Cored (ft)	0.0
Samples	9S
Boring No.	**HA11**

Field Tests: Dilatancy: R - Rapid S - Slow N - None; Toughness: L - Low M - Medium H - High; Plasticity: N - Nonplastic L - Low M - Medium H - High; Dry Strength: N - None L - Low M - Medium H - High V - Very High

*Note: Maximum particle size is determined by direct observation within the limitations of sampler size.

Note: Soil identification based on visual-manual methods of the USCS as practiced by Haley & Aldrich, Inc.

HA-TEST BORING-01 | HAR HA-ABER-01.GLB | HA-TB-CORE-WELL-01.GDT | G:\GINTD\WASHINGTON DC\39592-000\39592-000_TEST BORING_HA10-HA11 (2).GPJ | 18 Feb 13

HALEY & ALDRICH — TEST BORING REPORT

Boring No. HA11
File No. 39592-000
Sheet No. 2 of 2

Depth (ft)	Sampler Blows per 6 in.	Sample No. & Rec. (in.)	Sample Depth (ft)	Stratum Change Elev/Depth (ft)	USCS Symbol	VISUAL-MANUAL IDENTIFICATION AND DESCRIPTION (Density/consistency, color, GROUP NAME, max. particle size*, structure, odor, moisture, optional descriptions GEOLOGIC INTERPRETATION)
20						
25	22 50/5"	S8 18	23.5 24.4		ML	Similar to S2, except hard
	54 36 50/4"	S9 17	28.5 29.9	264.1 29.9	ML	Similar to S2, except hard
30						Bottom of Exploration at 29.9 ft

NOTE: Soil Identification based on visual-manual methods of the USCS as practiced by Haley & Aldrich, Inc.

Boring No. HA11

HA-TEST BORING-01 | HAR HA-ABER-01.GLB | HA-TB-CORE-WELL-01.GDT | G:\GINTD\WASHINGTON DC\39592-000\39592-000_TEST BORING_HA10-HA11 (2).GPJ | 18 Feb 13

GEOTECHNICAL NOTES:

1. BORING LOCATIONS PLAN AND LOGS OBTAINED FROM REPORT PROVIDED BY HALEY & ALDRICH.

SYM	DESCRIPTION	DATE
	FINAL CORRECTED SET	3/26/14
	100% FINAL DESIGN SUBMISSION	2/3/14
	65% VE SUBMISSION	11/25/13

NAVFAC

STATE OF MARYLAND — MICHAEL W. PUGH — No. 42509 — PROFESSIONAL ENGINEER — 3/24/14

HDR
ARCHITECTURE | ENGINEERING & CONSULTING
1101 KING STREET
SUITE 400
ALEXANDRIA, VIRGINIA 22314
703-518-8500

APPROVED
FOR COMMANDER NAVFAC
ACTIVITY
SATISFACTORY TO DATE
DES MMM DRW NI CHK MWP
PMDM CHEMENJU/HILL
BRANCH MANAGER N/A
CHIEF ENG/ARCH TOM COX

DEPARTMENT OF THE NAVY
NAVAL FACILITIES ENGINEERING COMMAND
COMPONENT NAME NSA/Bethesda

NAVAL FACILITIES ENGINEERING COMMAND ~ NAVFAC WASHINGTON
NSA - BETHESDA, MD

BETHESDA, MD

P125 - TEMPORARY MEDICAL FACILITIES
PACKAGE 2 - CLINIC BUILDING

GEOTECHNICAL - SOIL BORING LOG

SCALE: NOT TO SCALE
EPROJECT NO.: 1151333
CONSTR. CONTR. NO. N62470-09-D-9044
NAVFAC DRAWING NO. 13065738
SHEET OF 0

B-604

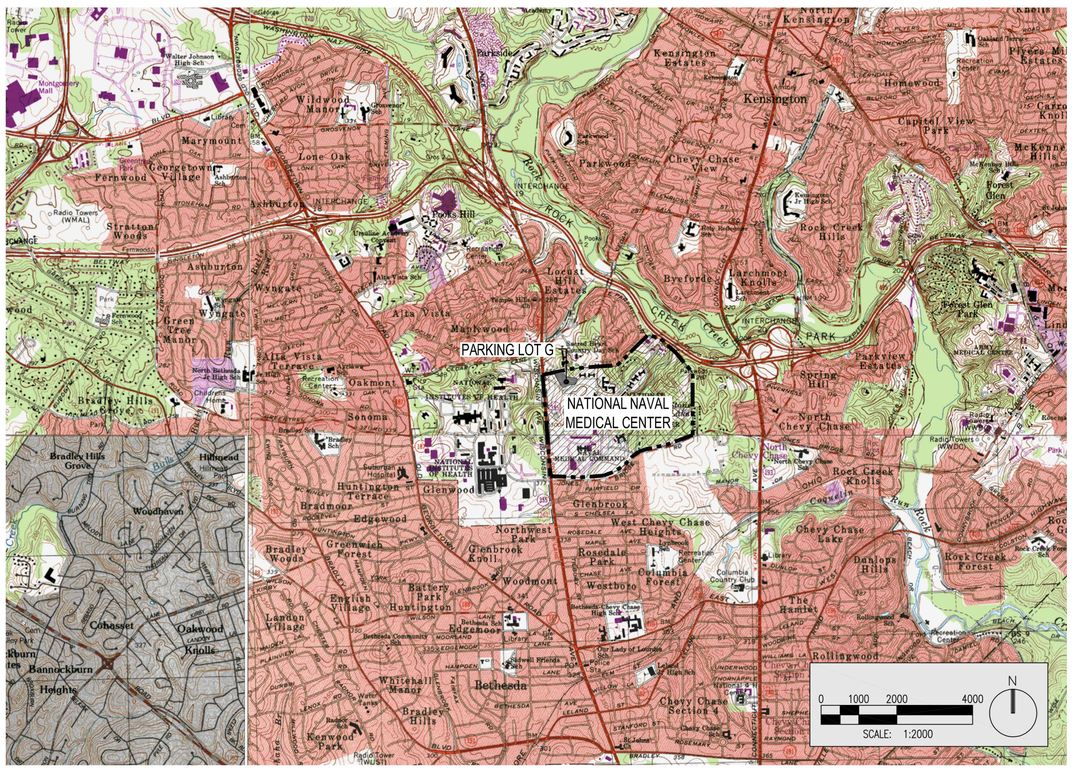

VICINITY MAP

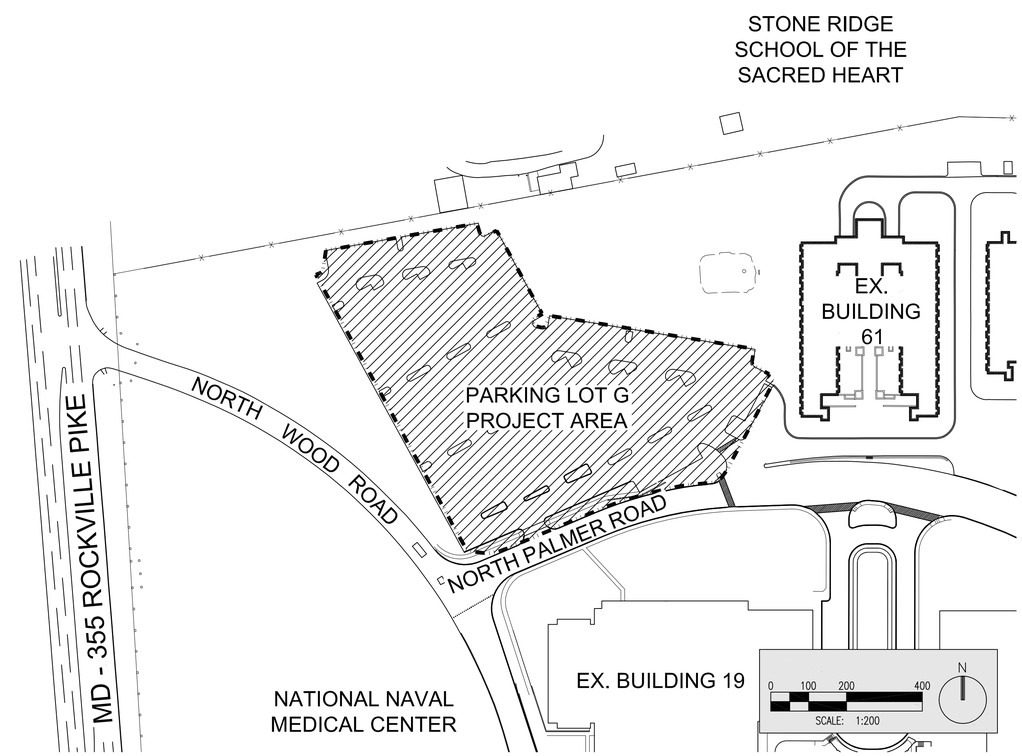

LOCATION MAP

SYM	DESCRIPTION	DATE
	FINAL CORRECTED SET	3/26/14
	100% FINAL DESIGN SUBMISSION	2/3/14
	65% VE SUBMISSION	11/25/13
	65% SUBMITTAL	4/26/13
	35% SUBMITTAL	3/8/13
	20% SUBMITTAL	1/18/13

NAVFAC

STATE OF MARYLAND — MICHAEL W. PUGH — No. 42503 — PROFESSIONAL ENGINEER
3/24/14

HDR
ARCHITECTURE | ENGINEERING & CONSULTING
1101 KING STREET
SUITE 400
ALEXANDRIA, VIRGINIA 22314
703-518-8500

APPROVED
FOR COMMANDER NAVFAC
ACTIVITY
SATISFACTORY TO DATE
DES MMM DRW NI CHK MWP
PM/DM CHEMENJU/HILL
BRANCH MANAGER N/A
CHIEF ENGARCH TOM COX

DEPARTMENT OF THE NAVY
NAVAL FACILITIES ENGINEERING COMMAND
COMPONENT NAME NSA/Bethesda
NAVAL FACILITIES ENGINEERING COMMAND ~ NAVFAC WASHINGTON
NSA - BETHESDA, MD
BETHESDA, MD
P125 - TEMPORARY MEDICAL FACILITIES
PACKAGE 2 - CLINIC BUILDING
CIVIL - VICINITY PLAN

SCALE: AS SHOWN
EPROJECT NO.: 1151333
CONSTR. CONTR. NO. N62470-09-D-9044
NAVFAC DRAWING NO. 13065739
SHEET OF 0
C-001

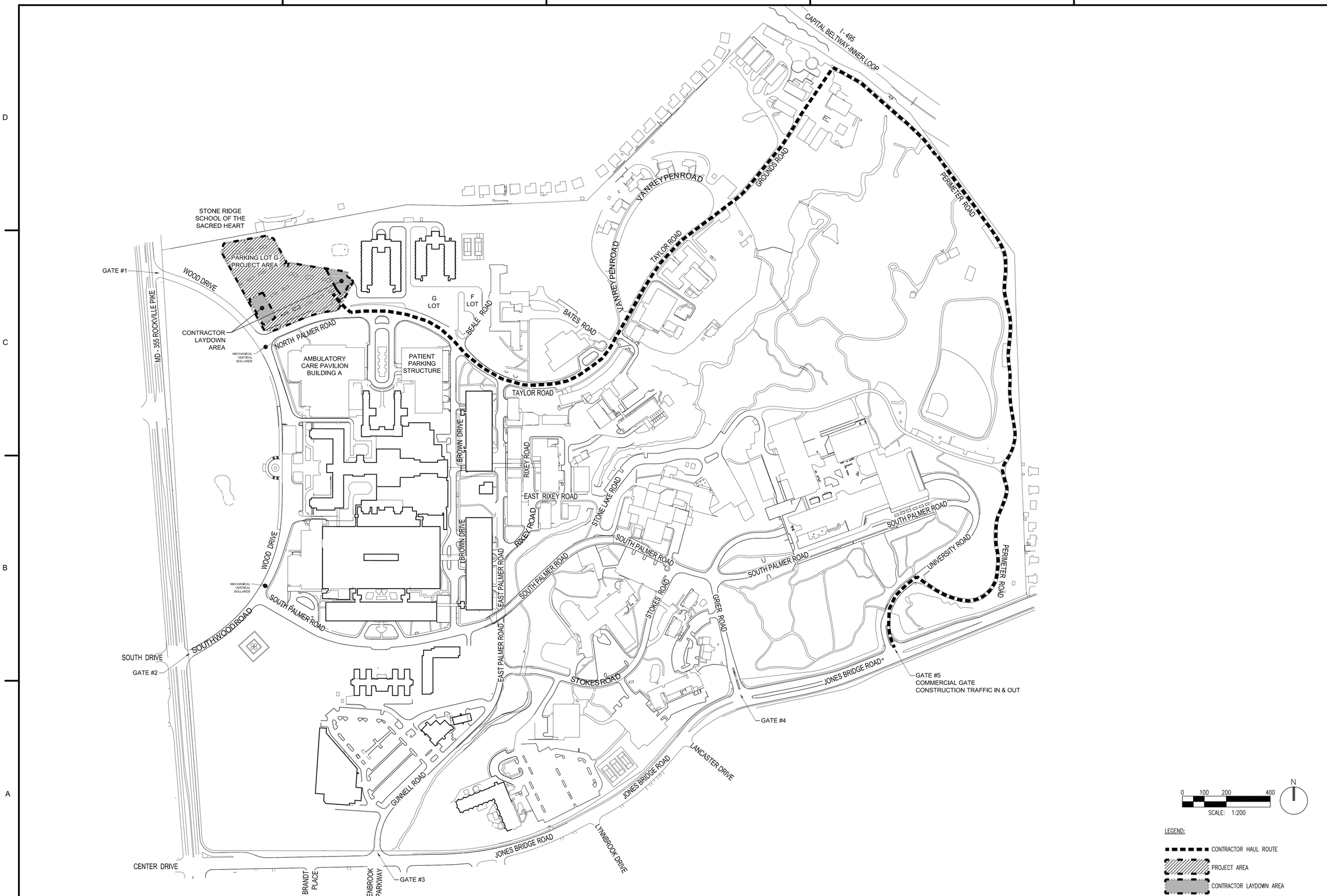

SYM	DESCRIPTION	DATE
	FINAL CORRECTED SET	3/26/14
	100% FINAL DESIGN SUBMISSION	2/3/14
	65% SUBMITTAL	4/26/13
	35% SUBMITTAL	3/8/13
	20% SUBMITTAL	1/18/13

NAVFAC

STATE OF MARYLAND
MICHAEL W. FUGATE
No. 42609
PROFESSIONAL ENGINEER
3/24/14

HDR
ARCHITECTURE | ENGINEERING & CONSULTING
1101 KING STREET
SUITE 400
ALEXANDRIA, VIRGINIA 22314
703-518-8500

APPROVED
FOR COMMANDER NAVFAC
ACTIVITY
SATISFACTORY TO DATE
DES. MMM DRW. NI CHK. MWP
PM/DM CHEMENJU/HILL
BRANCH MANAGER N/A
CHIEF ENGARCH TOM COX

DEPARTMENT OF THE NAVY
NAVAL FACILITIES ENGINEERING COMMAND
COMPONENT NAME NSA/Bethesda

NAVAL FACILITIES ENGINEERING COMMAND ~ NAVFAC WASHINGTON
NSA - BETHESDA, MD

BETHESDA, MD
P125 - TEMPORARY MEDICAL FACILITIES
PACKAGE 2 - CLINIC BUILDING

CIVIL - HAUL ROUTE PLAN

SCALE: 1" = 200'
EPROJECT NO.: 1151333
CONSTR. CONTR. NO. N62470-09-D-9044
NAVFAC DRAWING NO. 13065740
SHEET OF 0
C-002

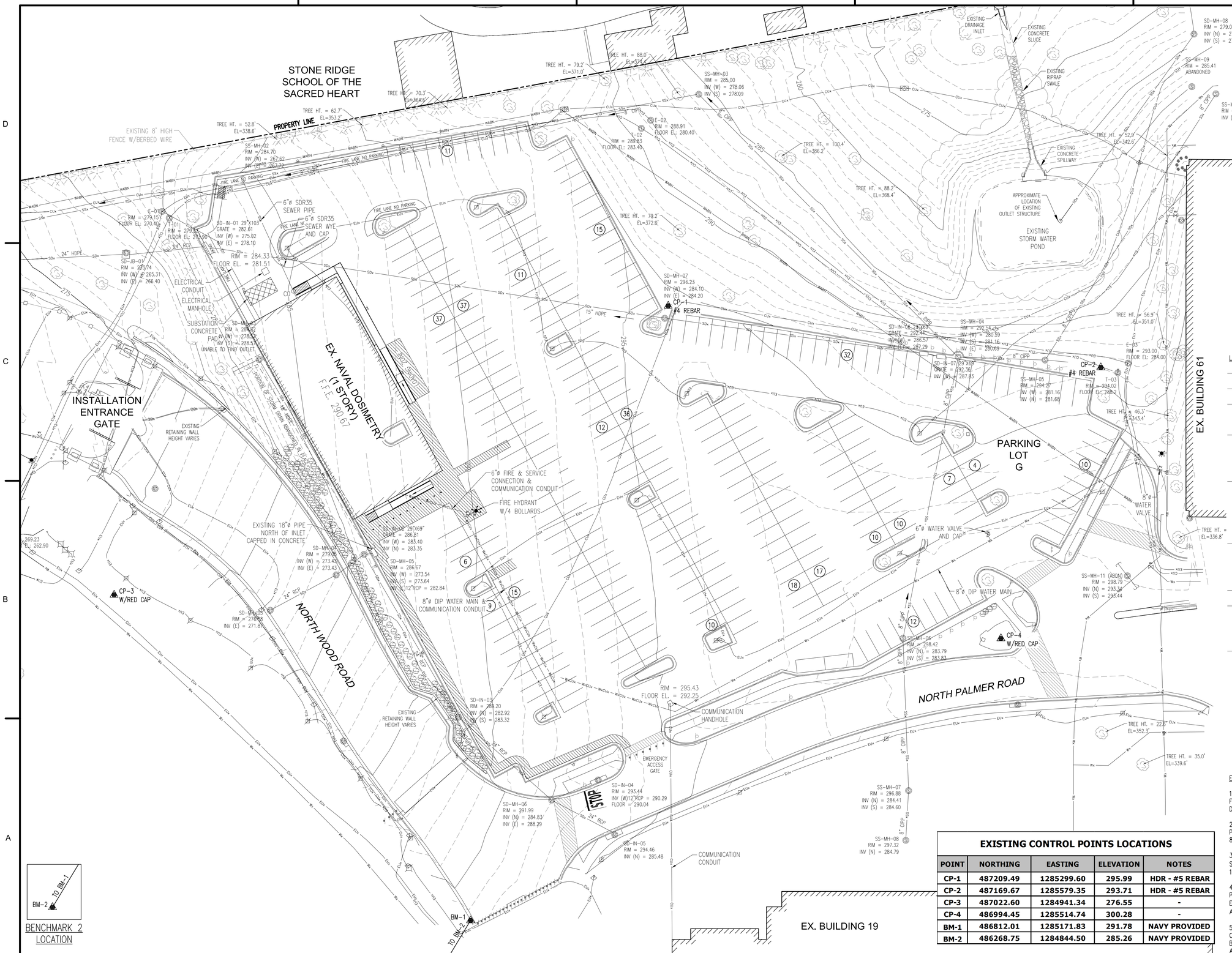

EXISTING CONTROL POINTS LOCATIONS

POINT	NORTHING	EASTING	ELEVATION	NOTES
CP-1	487209.49	1285299.60	295.99	HDR - #5 REBAR
CP-2	487169.67	1285579.35	293.71	HDR - #5 REBAR
CP-3	487022.60	1284941.34	276.55	-
CP-4	486994.45	1285514.74	300.28	-
BM-1	486812.01	1285171.83	291.78	NAVY PROVIDED
BM-2	486268.75	1284844.50	285.26	NAVY PROVIDED

LEGEND – EXISTING:

- 280 — EXISTING CONTOUR MAJOR
- EXISTING CONTOUR MINOR
- SSx — EXISTING STORM SEWER LINE
- EXISTING STORM SEWER MANHOLE
- SDx — EXISTING STORM DRAIN LINE
- EXISTING STORM DRAIN MANHOLE
- EXISTING STORM CATCH BASIN
- EUx — EXISTING ELECTRICAL CONDUIT
- EXISTING LIGHT POLE
- EXISTING ELECTRICAL MANHOLE
- EXISTING ELECTRICAL HAND HOLE
- CUx — EXISTING COMMUNICATION CONDUIT
- EXISTING COMMUNICATION MANHOLE
- EXISTING COMMUNICATION HAND HOLE
- Wx — EXISTING WATER LINE
- WABN — EXISTING ABANDONED WATER LINE
- EXISTING FIRE HYDRANT
- EXISTING WATER VALVE
- EXISTING CHAIN LINK FENCE
- EXISTING DECIDUOUS TREE
- EXISTING CONIFEROUS TREE
- EXISTING SHRUB
- EXISTING GATE POST
- EXISTING SIGN POST
- EXISTING CONTROL POINTS
- EXISTING PEDESTRIAN STRIPING WALKWAY

EXISTING SURVEY NOTES:

1. PLANIMETRIC AND TOPOGRAPHIC FEATURES SHOWN ARE TAKEN FROM AN ACTUAL FIELD SURVEY PERFORMED BY HDR IN DECEMBER 2012.

2. HORIZONTAL CONTROL SYSTEM BASED ON MARYLAND STATE PLANE NAD 83 FEET. VERTICAL CONTROL SYSTEM BASED ON NAVD 88 FEET.

3. PROPERTY LINE INFORMATION SHOWN HEREIN OBTAINED FROM SET OF PLANS TITLED "TRAFFIC MITIGATION MEASURES FOR GATES 1 AND 2" DATED AUGUST 15, 2011 PROVIDED BY NAVFAC.

4. UTILITY SURVEY FOR WATER, ELECTRICAL AND COMMUNICATION PROVIDED BY SO-DEEP UTILITY ENGINEERING COMPANY, 8397 EUCLID AVENUE, MANASSAS PARK, VA 20111, (703) 361-6005 AND DATED 1/22/2013. SEE SHEET C-101.

5. THE LOCATION OF UNDERGROUND UTILITIES ARE APPROXIMATE. CONTRACTOR TO FIELD VERIFY. ALL LOCATIONS ILLUSTRATED ARE BASED UPON ABOVE GROUND STRUCTURES THAT WERE VISIBLE AND ACCESSIBLE IN THE FIELD.

SYM	DESCRIPTION	DATE
	FINAL CORRECTED SET	3/26/14
	100% FINAL DESIGN SUBMISSION	2/3/14
	65% SUBMITTAL	4/26/13
	35% SUBMITTAL	3/8/13
	20% SUBMITTAL	1/18/13

NAVFAC

STATE OF MARYLAND — MICHAEL W. PUGH — No. 42603 — PROFESSIONAL ENGINEER — 3/24/14

HDR

ARCHITECTURE | ENGINEERING & CONSULTING
1101 KING STREET
SUITE 400
ALEXANDRIA, VIRGINIA 22314
703-518-8500

APPROVED

FOR COMMANDER NAVFAC

ACTIVITY

SATISFACTORY TO DATE

DES MMM DRW NI CHK MWP

PM/DM CHEMENJU/HILL

BRANCH MANAGER N/A

CHIEF ENG/ARCH TOM COX

DEPARTMENT OF THE NAVY
NAVAL FACILITIES ENGINEERING COMMAND
COMPONENT NAME: NSA/Bethesda

NAVAL FACILITIES ENGINEERING COMMAND – NAVFAC WASHINGTON
NSA - BETHESDA, MD

BETHESDA, MD

P125 - TEMPORARY MEDICAL FACILITIES
PACKAGE 2 - CLINIC BUILDING

CIVIL - EXISTING CONDITION PLAN

SCALE: 1" = 30'

EPROJECT NO.: 1151333

CONSTR. CONTR. NO. N62470-09-D-9044

NAVFAC DRAWING NO. 13065741

SHEET OF 0

C-101

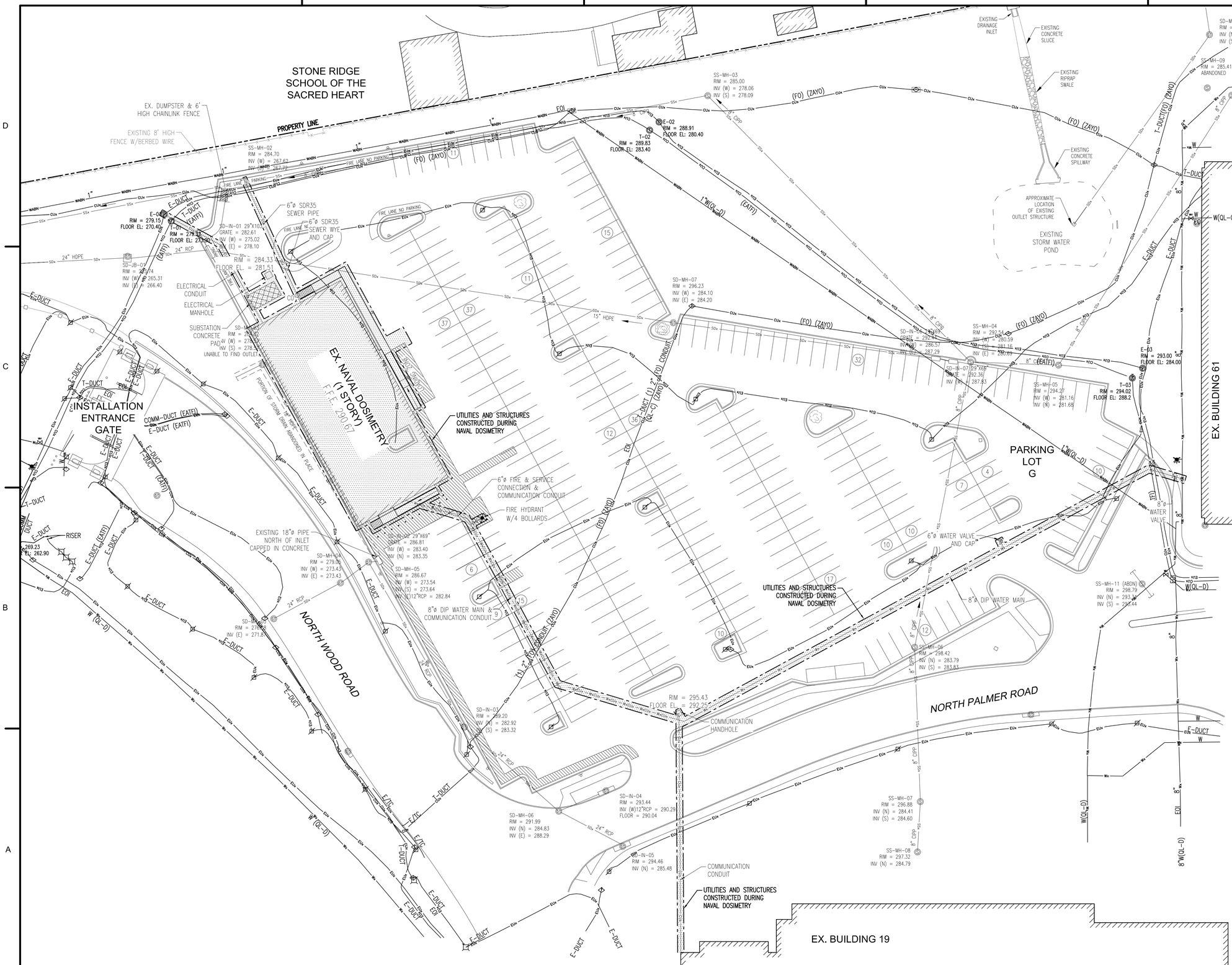

LEGEND – EXISTING:

- EXISTING STORM SEWER LINE
- EXISTING STORM SEWER MANHOLE
- EXISTING STORM DRAIN LINE
- EXISTING STORM DRAIN MANHOLE
- EXISTING STORM CATCH BASIN
- EXISTING ELECTRICAL CONDUIT
- EXISTING LIGHT POLE
- EXISTING ELECTRICAL MANHOLE
- EXISTING ELECTRICAL HAND HOLE
- EXISTING COMMUNICATION CONDUIT
- EXISTING COMMUNICATION MANHOLE
- EXISTING COMMUNICATION HAND HOLE
- EXISTING WATER LINE
- EXISTING ABANDONED WATER LINE
- EXISTING FIRE HYDRANT
- EXISTING WATER VALVE
- EXISTING CHAIN LINK FENCE

EXISTING SURVEY NOTES:

1. PLANIMETRIC AND TOPOGRAPHIC FEATURES SHOWN ARE TAKEN FROM AN ACTUAL FIELD SURVEY PERFORMED BY HDR IN DECEMBER 2012.

2. HORIZONTAL CONTROL SYSTEM BASED ON MARYLAND STATE PLANE NAD 83 FEET. VERTICAL CONTROL SYSTEM BASED ON NAVD 88 FEET.

3. PROPERTY LINE INFORMATION SHOWN HEREIN OBTAINED FROM SET OF PLANS TITLED "TRAFFIC MITIGATION MEASURES FOR GATES 1 AND 2" DATED AUGUST 15, 2011 PROVIDED BY NAVFAC.

4. THE LOCATION OF UNDERGROUND UTILITIES ARE APPROXIMATE. CONTRACTOR TO FIELD VERIFY. ALL LOCATIONS ILLUSTRATED ARE BASED UPON ABOVE GROUND STRUCTURES THAT WERE VISIBLE AND ACCESSIBLE IN THE FIELD.

EXISTING UTILITY SURVEY NOTES:

1. UTILITY SURVEY FOR WATER, ELECTRICAL AND COMMUNICATION PROVIDED BY SO-DEEP UTILITY ENGINEERING COMPANY, 8397 EUCLID AVENUE, MANASSAS PARK, VA 20111, (703) 361-6005 AND DATED 1/22/2013.

2. ALL UTILITY INFORMATION HEREON IS DEPICTED TO QUALITY LEVEL "B" (QL-B) UNLESS OTHERWISE NOTED. QL-B INFORMATION IS OBTAINED THROUGH THE APPLICATION OF APPROPRIATE SURFACE GEOPHYSICAL METHODS TO IDENTIFY THE EXISTENCE AND APPROXIMATE HORIZONTAL POSITION OF SUBSURFACE UTILITIES. QL-B DATA ARE REPRODUCIBLE BY SURFACE GEOPHYSICS AT ANY POINT OF THEIR DEPICTION. THIS INFORMATION IS SURVEYED TO APPLICABLE TOLERANCES AND REDUCED ONTO PLAN DOCUMENTS.

3. UTILITY INFORMATION THAT IS LABELED "QL-C" OR "QL-D" IS DERIVED FROM FURNISHED RECORDS. SUCH INFORMATION MAY NOT BE ACCURATE OR RELIABLE. SO-DEEP EXPRESSLY DISCLAIMS RESPONSIBILITY FOR THE ACCURACY OR RELIABILITY OF UTILITY INFORMATION THAT IS DEPICTED ACCORDING TO RECORDS.

4. SIZE INFORMATION SHOWN HEREON IS TAKEN FROM AVAILABLE UTILITY RECORDS.

ABBREVIATIONS:

(F.O.) – FIBER OPTIC
(QL-C) – DEPICTED ACCORDING TO RECORD INFORMATION AND EXISTING ASSOCIATED UTILITY STRUCTURES. NO ELECTRONIC INFORMATION WAS OBTAINED
(QL-D) – DEPICTED ACCORDING TO RECORD INFORMATION. NO ELECTRONIC INFORMATION WAS OBTAINED
(AATUR) – ABANDONED ACCORDING TO UTILITY RECORDS
(AATFI) – ABANDONED ACCORDING TO FIELD INSPECTION
(DATFI) – ABANDONED ACCORDING TO FIELD INSPECTION
(EATFI) – EMPTY ACCORDING TO FIELD INSPECTION
EOI – END OF ELECTRONIC DESIGNATING INFORMATION
EORI – END OF RECORD INFORMATION
IRR – IRRIGATION
(ZAYO) – CABLE COMPANY PROVIDER

SYM	DESCRIPTION	DATE
	FINAL CORRECTED SET	3/26/14
	100% FINAL DESIGN SUBMISSION	2/3/14
	65% VE SUBMISSION	11/25/13
	65% SUBMITTAL	4/26/13
	35% SUBMITTAL	3/8/13
	20% SUBMITTAL	1/18/13

NAVFAC

STATE OF MARYLAND — MICHAEL W. PUGH — No. 42509 — PROFESSIONAL ENGINEER — 3/24/14

HDR
ARCHITECTURE | ENGINEERING & CONSULTING
1101 KING STREET
SUITE 400
ALEXANDRIA, VIRGINIA 22314
703-518-8500

APPROVED
FOR COMMANDER NAVFAC
ACTIVITY
SATISFACTORY TO DATE

DES MMM DRW NI CHK MWP
PMDM CHEMENJU/HILL
BRANCH MANAGER N/A
CHIEF ENG/ARCH TOM COX

DEPARTMENT OF THE NAVY
NAVAL FACILITIES ENGINEERING COMMAND
COMPONENT NAME
NSA/Bethesda

NAVAL FACILITIES ENGINEERING COMMAND ~ NAVFAC WASHINGTON
NSA - BETHESDA, MD

BETHESDA, MD

P125 - TEMPORARY MEDICAL FACILITIES
PACKAGE 2 - CLINIC BUILDING

CIVIL - EXISTING UTILITIES SURVEY PLAN

SCALE: 1" = 30'
EPROJECT NO.: 1151333
CONSTR. CONTR. NO. N62470-09-D-9044
NAVFAC DRAWING NO. 13065742
SHEET OF 0
C-102

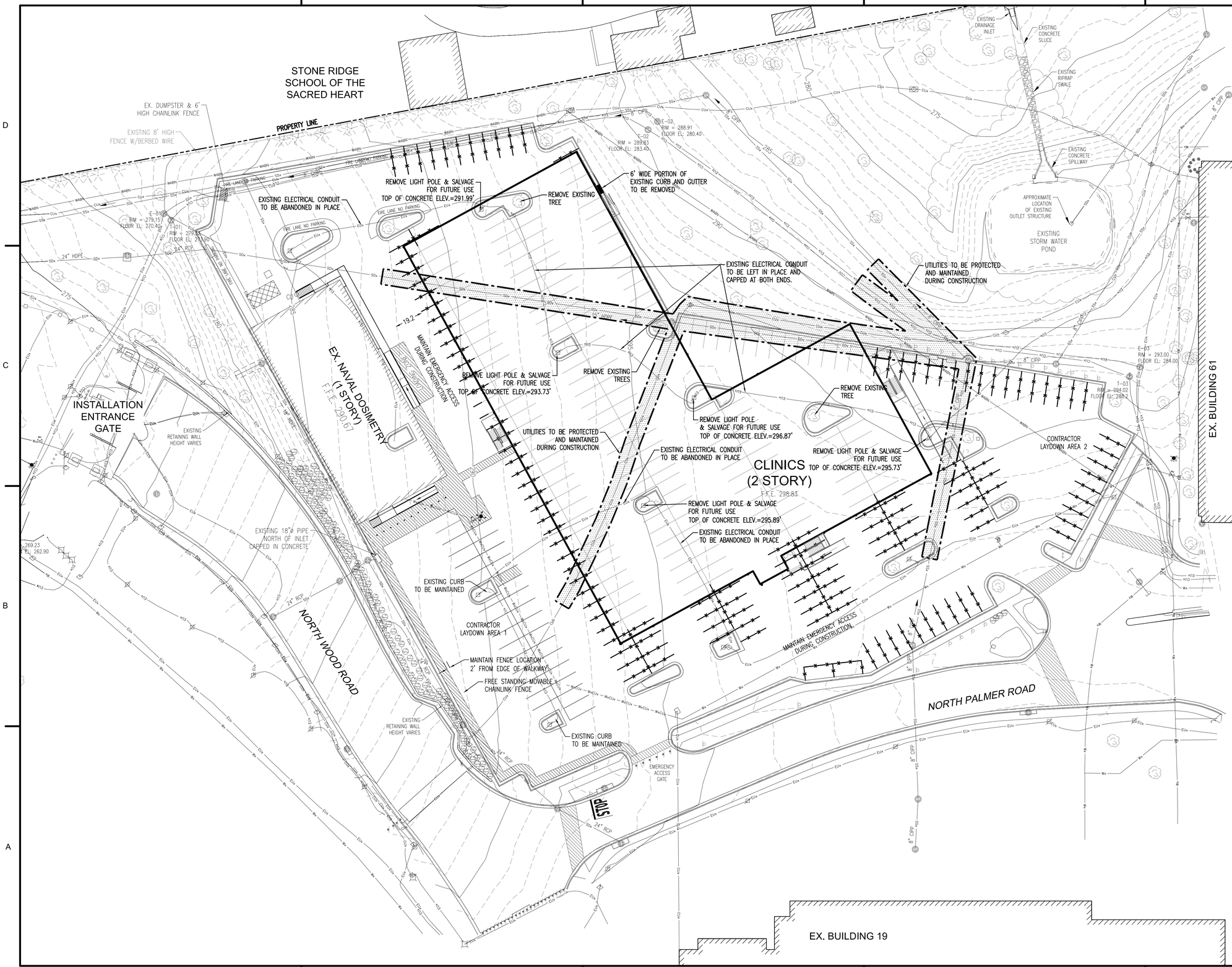

30' 20' 10' 0 30'
SCALE:1"= 30'-0"

N

LEGEND – EXISTING:

- 280 — EXISTING CONTOUR MAJOR
- EXISTING CONTOUR MINOR
- SSx — EXISTING STORM SEWER LINE
- EXISTING STORM SEWER MANHOLE
- SDx — EXISTING STORM DRAIN LINE
- EXISTING STORM DRAIN MANHOLE
- EXISTING STORM CATCH BASIN
- EUx — EXISTING ELECTRICAL CONDUIT
- EXISTING LIGHT POLE
- EXISTING ELECTRICAL MANHOLE
- EXISTING ELECTRICAL HAND HOLE
- CUx — EXISTING COMMUNICATION CONDUIT
- EXISTING COMMUNICATION MANHOLE
- EXISTING COMMUNICATION HAND HOLE
- Wx — EXISTING WATER LINE
- WABN — EXISTING ABANDONED WATER LINE
- EXISTING FIRE HYDRANT
- EXISTING WATER VALVE
- EXISTING CHAIN LINK FENCE
- EXISTING DECIDUOUS TREE
- EXISTING CONIFEROUS TREE
- EXISTING SHRUB
- EXISTING GATE POST
- EXISTING SIGN POST

DEMOLITION LEGEND:

- PORTION OF PARKING SPACE STRIPING PAINTED BLACK
- UTILITIES TO BE PROTECTED AND MAINTAINED DURING CONSTRUCTION

EXISTING SURVEY NOTES:

1. PLANIMETRIC AND TOPOGRAPHIC FEATURES SHOWN ARE TAKEN FROM AN ACTUAL FIELD SURVEY PERFORMED BY HDR IN DECEMBER 2012.

2. HORIZONTAL CONTROL SYSTEM BASED ON MARYLAND STATE PLANE NAD 83 FEET. VERTICAL CONTROL SYSTEM BASED ON NAVD 88 FEET.

3. PROPERTY LINE INFORMATION SHOWN HEREIN OBTAINED FROM SET OF PLANS TITLED "TRAFFIC MITIGATION MEASURES FOR GATES 1 AND 2" DATED AUGUST 15, 2011 PROVIDED BY NAVFAC.

4. UTILITY SURVEY FOR WATER, ELECTRICAL AND COMMUNICATION PROVIDED BY SO-DEEP UTILITY ENGINEERING COMPANY, 8397 EUCLID AVENUE, MANASSAS PARK, VA 20111, (703) 361-6005 AND DATED 1/22/2013. SEE SHEET C-101.

5. THE LOCATION OF UNDERGROUND UTILITIES ARE APPROXIMATE. CONTRACTOR TO FIELD VERIFY. ALL LOCATIONS ILLUSTRATED ARE BASED UPON ABOVE GROUND STRUCTURES THAT WERE VISIBLE AND ACCESSIBLE IN THE FIELD.

6. CONTRACTOR SHALL RESTORE EXISTING LIGHT FEATURES, CURB AND GUTTER, SIDEWALKS, PAVEMENTS AND ANY OTHER SITE FEATURES TO EXISTING CONDITIONS IF THEY ARE DAMAGED DURING CONSTRUCTION AND AT NO ADDITIONAL COST TO THE GOVERNMENT.

DEMOLITION NOTES:

1. CONTRACTOR SHALL PROTECT AND MAINTAIN ALL CURB AND GUTTER WITHIN THE PARKING LOT G, UNLESS OTHERWISE NOTED.

2. REMOVE EXISTING LIGHT POLE AND SALVAGE AS DIRECTED BY CONTRACTING OFFICER. LIGHT POLE BASE TO REMAIN FOR FUTURE USE.

SYM	DESCRIPTION	DATE
	FINAL CORRECTED SET	3/26/14
	100% FINAL DESIGN SUBMISSION	2/3/14
	65% VE SUBMISSION	11/25/13
	65% SUBMITTAL	4/26/13
	35% SUBMITTAL	3/8/13
	20% SUBMITTAL	1/18/13

NAVFAC

STATE OF MARYLAND
MICHAEL W. PUGH
No. 42503
PROFESSIONAL ENGINEER
3/24/14

HDR
ARCHITECTURE | ENGINEERING & CONSULTING
1101 KING STREET
SUITE 400
ALEXANDRIA, VIRGINIA 22314
703-518-8500

APPROVED
FOR COMMANDER NAVFAC
ACTIVITY
SATISFACTORY TO DATE

DES MMM DRW NI CHK MWP
PM/DM CHEMENJU/HILL
BRANCH MANAGER N/A
CHIEF ENG/ARCH TOM COX

DEPARTMENT OF THE NAVY
NAVAL FACILITIES ENGINEERING COMMAND
COMPONENT NAME NSA/Bethesda

NAVAL FACILITIES ENGINEERING COMMAND ~ NAVFAC WASHINGTON
NSA - BETHESDA, MD

BETHESDA, MD

P125 - TEMPORARY MEDICAL FACILITIES
PACKAGE 2 - CLINIC BUILDING

CIVIL - DEMOLITION PLAN

SCALE: 1" = 30'
EPROJECT NO.: 1151333
CONSTR. CONTR. NO.: N62470-09-D-9044
NAVFAC DRAWING NO.: 13065743
SHEET OF 0

CD-101

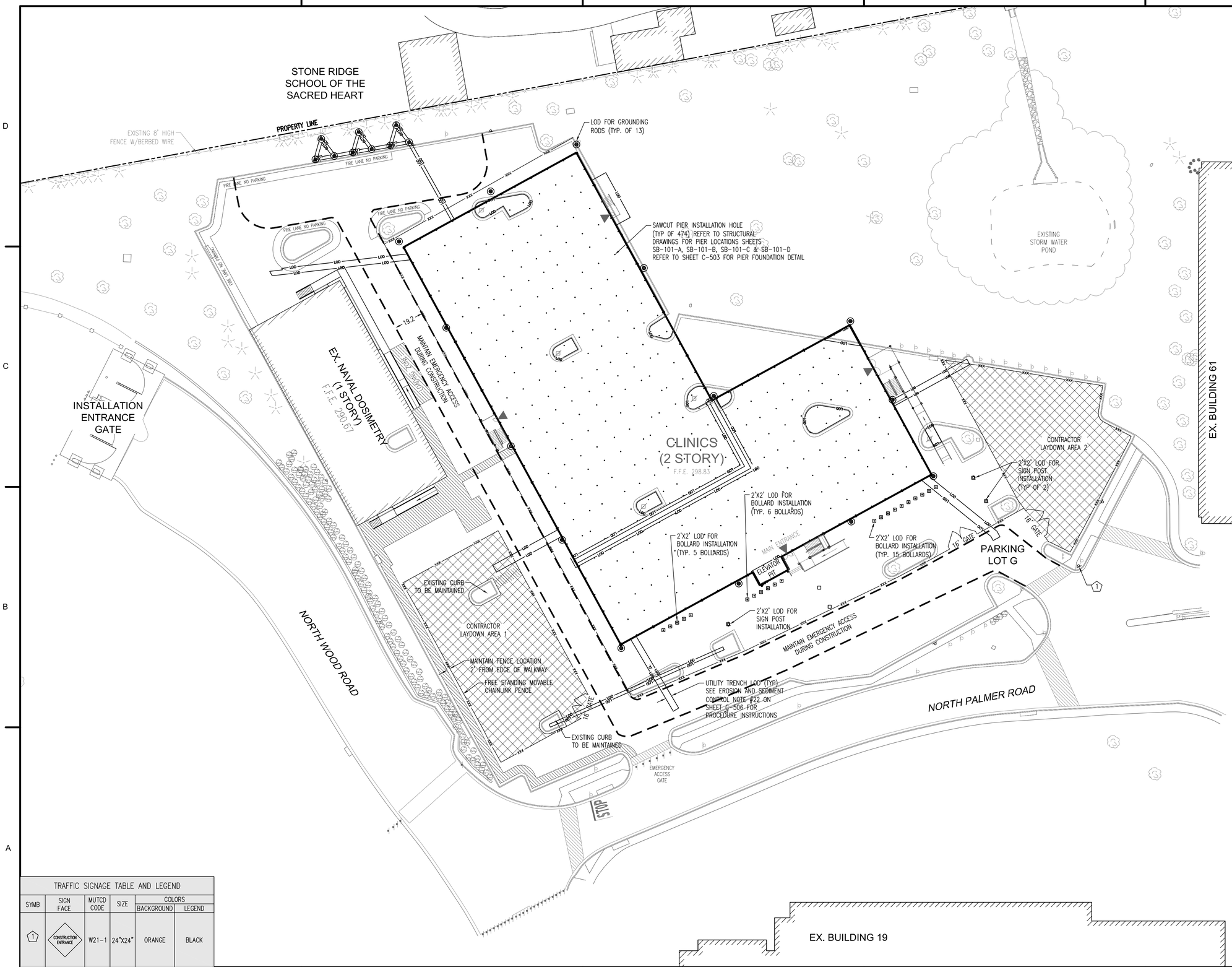

LEGEND – EXISTING:

- EXISTING CHAIN LINK FENCE
- EXISTING DECIDUOUS TREE
- EXISTING CONIFEROUS TREE
- EXISTING SHRUB
- EXISTING GATE POST
- EXISTING SIGN POST
- EXISTING PEDESTRIAN STRIPING WALKWAY

LEGEND – PROPOSED:

- LOD — LIMIT OF DISTURBANCE
- XXX — FREE STANDING MOVABLE CHAINLINK FENCE

EXISTING SURVEY NOTES:

1. PLANIMETRIC AND TOPOGRAPHIC FEATURES SHOWN ARE TAKEN FROM AN ACTUAL FIELD SURVEY PERFORMED BY HDR IN DECEMBER 2012.

2. HORIZONTAL CONTROL SYSTEM BASED ON MARYLAND STATE PLANE NAD 83 FEET. VERTICAL CONTROL SYSTEM BASED ON NAVD 88 FEET.

3. PROPERTY LINE INFORMATION SHOWN HEREIN OBTAINED FROM SET OF PLANS TITLED "TRAFFIC MITIGATION MEASURES FOR GATES 1 AND 2" DATED AUGUST 15, 2011 PROVIDED BY NAVFAC.

4. UTILITY SURVEY FOR WATER, ELECTRICAL AND COMMUNICATION PROVIDED BY SO-DEEP UTILITY ENGINEERING COMPANY, 8397 EUCLID AVENUE, MANASSAS PARK, VA 20111, (703) 361-6005 AND DATED 1/22/2013. SEE SHEET C-101.

5. THE LOCATION OF UNDERGROUND UTILITIES ARE APPROXIMATE. CONTRACTOR TO FIELD VERIFY. ALL LOCATIONS ILLUSTRATED ARE BASED UPON ABOVE GROUND STRUCTURES THAT WERE VISIBLE AND ACCESSIBLE IN THE FIELD.

6. THERE SHALL BE NO EARTH DISTURBANCE OR STOCKPILING OF ERODABLE MATERIAL IN STAGING AREA OUTSIDE OF LOD.

STAGING NOTES:

1. CONTRACTOR LAYDOWN AREA 1 WILL ONLY BE AVAILABLE AFTER COMPLETION OF PACKAGE 1 CONSTRUCTION.

2. THE CONTRACTOR SHALL MAINTAIN VEHICLE ACCESS TO EXISTING DOSIMETRY BUILDING FOR EMERGENCIES AND DELIVERIES AT ALL TIMES DURING CONSTRUCTION.

3. THE CONTRACTOR SHALL MAINTAIN IN SAFE AND UNOBSTRUCTED CONDITIONS THE EXISTING PEDESTRIAN ACCESS TO THE EXISTING DOSIMETRY BUILDING AT ALL TIMES.

4. ALL PROPOSED ROAD CLOSURES AND DETOURS SHALL BE COORDINATED WITH THE BASE COMMANDER (OR OTHER DULY APPOINTED CONTRACTING OFFICER).

ARCHITECTURAL NOTES:

1. REFER TO A-101 SHEETS (ARCHITECTURAL PLANS) FOR THE DIMENSIONS OF RAMPS AND STAIRS.

TRAFFIC SIGNAGE TABLE AND LEGEND

SYMB	SIGN FACE	MUTCD CODE	SIZE	COLORS	
				BACKGROUND	LEGEND
1	CONSTRUCTION ENTRANCE	W21-1	24"X24"	ORANGE	BLACK

SYM	DESCRIPTION	DATE
	FINAL CORRECTED SET	3/26/14
	100% FINAL DESIGN SUBMISSION	2/3/14
	65% VE SUBMISSION	11/25/13
	65% SUBMITTAL	4/26/13
	35% SUBMITTAL	3/8/13
	20% SUBMITTAL	1/18/13

NAVFAC

STATE OF MARYLAND MICHAEL W. FUGGI No. 42509 PROFESSIONAL ENGINEER
3/24/14

HDR
ARCHITECTURE | ENGINEERING & CONSULTING
1101 KING STREET
SUITE 400
ALEXANDRIA, VIRGINIA 22314
703-518-8500

APPROVED
FOR COMMANDER NAVFAC
ACTIVITY
SATISFACTORY TO DATE

DES MMM DRW NI CHK MWP
PM/DM CHEMENJU/HILL
BRANCH MANAGER N/A
CHIEF ENG/ARCH TOM COX

DEPARTMENT OF THE NAVY
COMPONENT NAME NAVAL FACILITIES ENGINEERING COMMAND
NAVAL FACILITIES ENGINEERING COMMAND ~ NAVFAC WASHINGTON
NSA/Bethesda NSA~BETHESDA, MD BETHESDA, MD

P125 - TEMPORARY MEDICAL FACILITIES
PACKAGE 2 - CLINIC BUILDING

CIVIL - STAGING PLAN

SCALE: 1" = 30'
EPROJECT NO.: 1151333
CONSTR. CONTR. NO. N62470-09-D-9044
NAVFAC DRAWING NO. 13065744
SHEET OF 0

CS-101

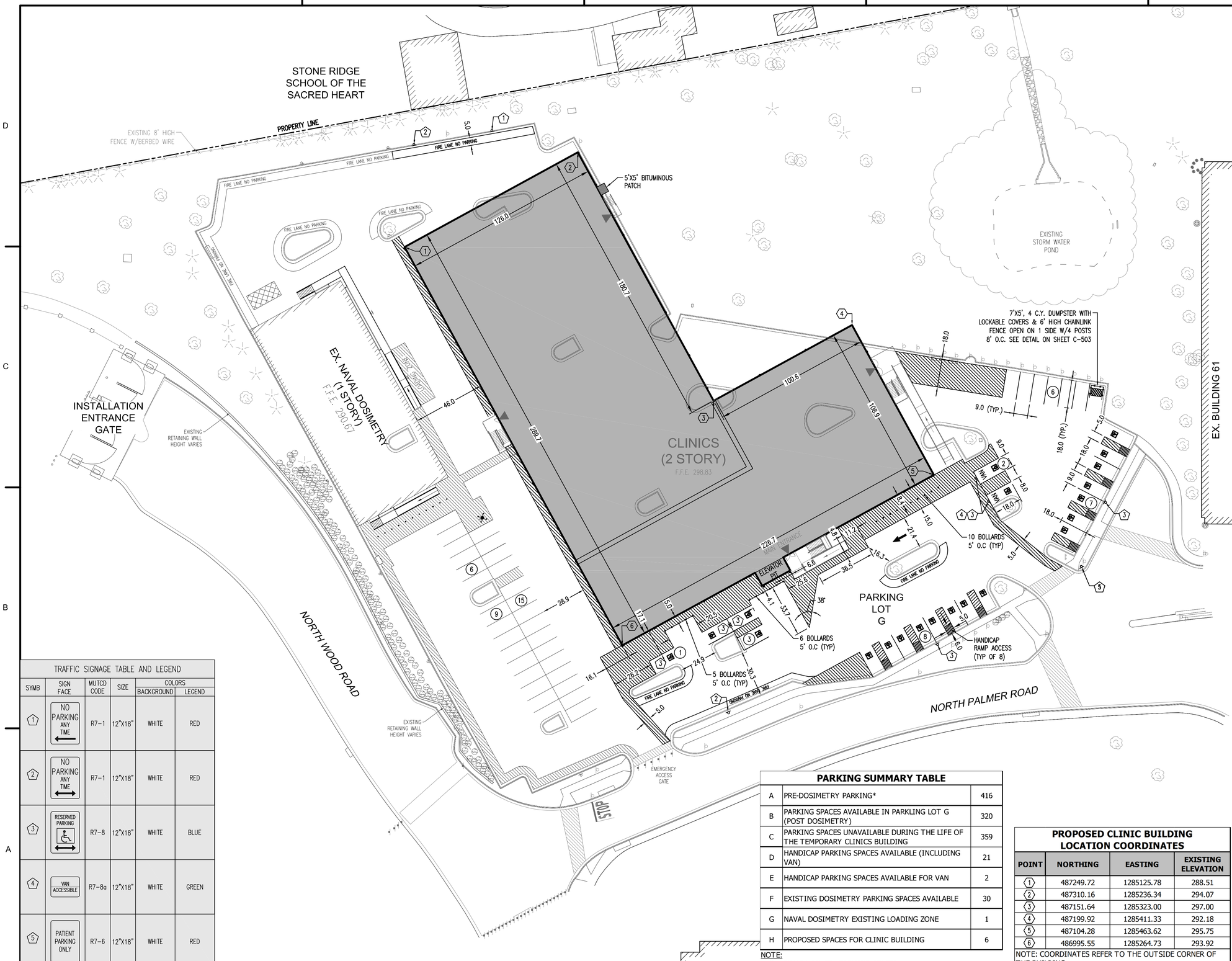

LEGEND – EXISTING:

- EXISTING CHAIN LINK FENCE
- EXISTING DECIDUOUS TREE
- EXISTING CONIFEROUS TREE
- EXISTING SHRUB
- EXISTING GATE POST
- EXISTING SIGN POST
- EXISTING PEDESTRIAN STRIPING WALKWAY

LEGEND – PROPOSED:

- BUILDING ENTRANCE/EXIT
- BUILDING RAMP
- PEDESTRIAN STRIPING WALKWAY

EXISTING SURVEY NOTES:

1. PLANIMETRIC AND TOPOGRAPHIC FEATURES SHOWN ARE TAKEN FROM AN ACTUAL FIELD SURVEY PERFORMED BY HDR IN DECEMBER 2012.

2. HORIZONTAL CONTROL SYSTEM BASED ON MARYLAND STATE PLANE NAD 83 FEET. VERTICAL CONTROL SYSTEM BASED ON NAVD 88 FEET.

3. PROPERTY LINE INFORMATION SHOWN HEREIN OBTAINED FROM SET OF PLANS TITLED "TRAFFIC MITIGATION MEASURES FOR GATES 1 AND 2" DATED AUGUST 15, 2011 PROVIDED BY NAVFAC.

4. UTILITY SURVEY FOR WATER, ELECTRICAL AND COMMUNICATION PROVIDED BY SO-DEEP UTILITY ENGINEERING COMPANY, 8397 EUCLID AVENUE, MANASSAS PARK, VA 20111, (703) 361-6005 AND DATED 1/22/2013. SEE SHEET C-101.

5. THE LOCATION OF UNDERGROUND UTILITIES ARE APPROXIMATE. CONTRACTOR TO FIELD VERIFY. ALL LOCATIONS ILLUSTRATED ARE BASED UPON ABOVE GROUND STRUCTURES THAT WERE VISIBLE AND ACCESSIBLE IN THE FIELD.

SITE LAYOUT NOTES:

1. ASPHALT FOR THE REPAIR OF THE ROADS OR PARKING LOT SHOULD MATCH EXISTING. ALL MATERIALS AND INSTALLATION SHALL BE PER MDOT STANDARDS AND SPECIFICATIONS.

ARCHITECTURAL NOTES:

1. REFER TO A-101 SHEETS (ARCHITECTURAL PLANS) FOR THE DIMENSIONS OF RAMPS AND STAIRS.

TRAFFIC SIGNAGE TABLE AND LEGEND

SYMB	SIGN FACE	MUTCD CODE	SIZE	COLORS BACKGROUND	COLORS LEGEND
1	NO PARKING ANY TIME	R7-1	12"X18"	WHITE	RED
2	NO PARKING ANY TIME	R7-1	12"X18"	WHITE	RED
3	RESERVED PARKING	R7-8	12"X18"	WHITE	BLUE
4	VAN ACCESSIBLE	R7-8a	12"X18"	WHITE	GREEN
5	PATIENT PARKING ONLY	R7-6	12"X18"	WHITE	RED

PARKING SUMMARY TABLE

A	PRE-DOSIMETRY PARKING*	416
B	PARKING SPACES AVAILABLE IN PARKLING LOT G (POST DOSIMETRY)	320
C	PARKING SPACES UNAVAILABLE DURING THE LIFE OF THE TEMPORARY CLINICS BUILDING	359
D	HANDICAP PARKING SPACES AVAILABLE (INCLUDING VAN)	21
E	HANDICAP PARKING SPACES AVAILABLE FOR VAN	2
F	EXISTING DOSIMETRY PARKING SPACES AVAILABLE	30
G	NAVAL DOSIMETRY EXISTING LOADING ZONE	1
H	PROPOSED SPACES FOR CLINIC BUILDING	6

NOTE:
* SOME NON CONFORMING SPACES

PROPOSED CLINIC BUILDING LOCATION COORDINATES

POINT	NORTHING	EASTING	EXISTING ELEVATION
1	487249.72	1285125.78	288.51
2	487310.16	1285236.34	294.07
3	487151.64	1285323.00	297.00
4	487199.92	1285411.33	292.18
5	487104.28	1285463.62	295.75
6	486995.55	1285264.73	293.92

NOTE: COORDINATES REFER TO THE OUTSIDE CORNER OF THE BUILDING

SYM	DESCRIPTION	DATE
	FINAL CORRECTED SET	3/26/14
	100% FINAL DESIGN SUBMISSION	2/3/14
	65% VE SUBMISSION	11/25/13
	65% SUBMITTAL	4/26/13
	35% SUBMITTAL	3/8/13
	20% SUBMITTAL	1/18/13

NAVFAC

STATE OF MARYLAND MICHAEL W. YUCUS No. 42603 PROFESSIONAL ENGINEER 3/24/14

HDR
ARCHITECTURE | ENGINEERING & CONSULTING
1101 KING STREET
SUITE 400
ALEXANDRIA, VIRGINIA 22314
703-518-8500

APPROVED
FOR COMMANDER NAVFAC
ACTIVITY
SATISFACTORY TO DATE
DES. MMM DRW. NI CHK. MWP
PM/DM CHEMENJU/HILL
BRANCH MANAGER N/A
CHIEF ENGARCH TOM COX

DEPARTMENT OF THE NAVY
NAVAL FACILITIES ENGINEERING COMMAND ~ NAVFAC WASHINGTON
COMPONENT NAME NSA/Bethesda
NAVAL FACILITIES ENGINEERING COMMAND NSA - BETHESDA, MD
BETHESDA, MD
P125 - TEMPORARY MEDICAL FACILITIES PACKAGE 2 - CLINIC BUILDING
CIVIL - SITE LAYOUT, STRIPING AND SIGNAGE PLAN

SCALE: 1" = 30'
EPROJECT NO.: 1151333
CONSTR. CONTR. NO. N62470-09-D-9044
NAVFAC DRAWING NO. 13065745
SHEET OF 0
CS-102

STONE RIDGE SCHOOL OF THE SACRED HEART

PROPERTY LINE

FIRE LANE NO PARKING

Smeal Pumper CAFS

EXISTING STORM WATER POND

EX. BUILDING 61

INSTALLATION ENTRANCE GATE

EX. NAVAL DOSIMETRY (1 STORY) F.F.E. 290.67

CLINICS (2 STORY) F.F.E. 298.83

MAIN ENTRANCE

PARKING LOT G

NORTH WOOD ROAD

NORTH PALMER ROAD

EMERGENCY ACCESS GATE

STOP

EX. BUILDING 19

SCALE:1"= 30'-0"

30' 20' 10' 0 30'

N

Smeal Pumper CAFS

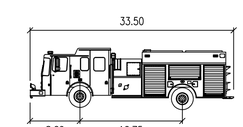

	feet
Width	: 8.17
Track	: 7.94
Lock to Lock Time	: 6.0
Steering Angle	: 45.0

SYM	DESCRIPTION	DATE
	FINAL CORRECTED SET	3/26/14
	100% FINAL DESIGN SUBMISSION	2/3/14
	65% VE SUBMISSION	11/25/13

NAVFAC

STATE OF MARYLAND MICHAEL W. PUGH No. 42603 PROFESSIONAL ENGINEER

3/24/14

HDR

ARCHITECTURE | ENGINEERING & CONSULTING

1101 KING STREET
SUITE 400
ALEXANDRIA, VIRGINIA 22314
703-518-8500

APPROVED

FOR COMMANDER NAVFAC

ACTIVITY

SATISFACTORY TO DATE

DES. MMM DRW NI CHK. MWP

PM/DM CHEMENJU/HILL

BRANCH MANAGER N/A

CHIEF ENG/ARCH TOM COX

DEPARTMENT OF THE NAVY
NAVAL FACILITIES ENGINEERING COMMAND ~ NAVFAC WASHINGTON
COMPONENT NAME NSA/Bethesda

NAVAL FACILITIES ENGINEERING COMMAND
NSA - BETHESDA, MD

BETHESDA, MD

P125 - TEMPORARY MEDICAL FACILITIES
PACKAGE 2 - CLINIC BUILDING

CIVIL - AUTOTURN SIMULATION ANALYSIS

SCALE: 1" = 30'

EPROJECT NO.: 1151333

CONSTR. CONTR. NO. N62470-09-D-9044

NAVFAC DRAWING NO. 13065746

SHEET OF 0

CS-103

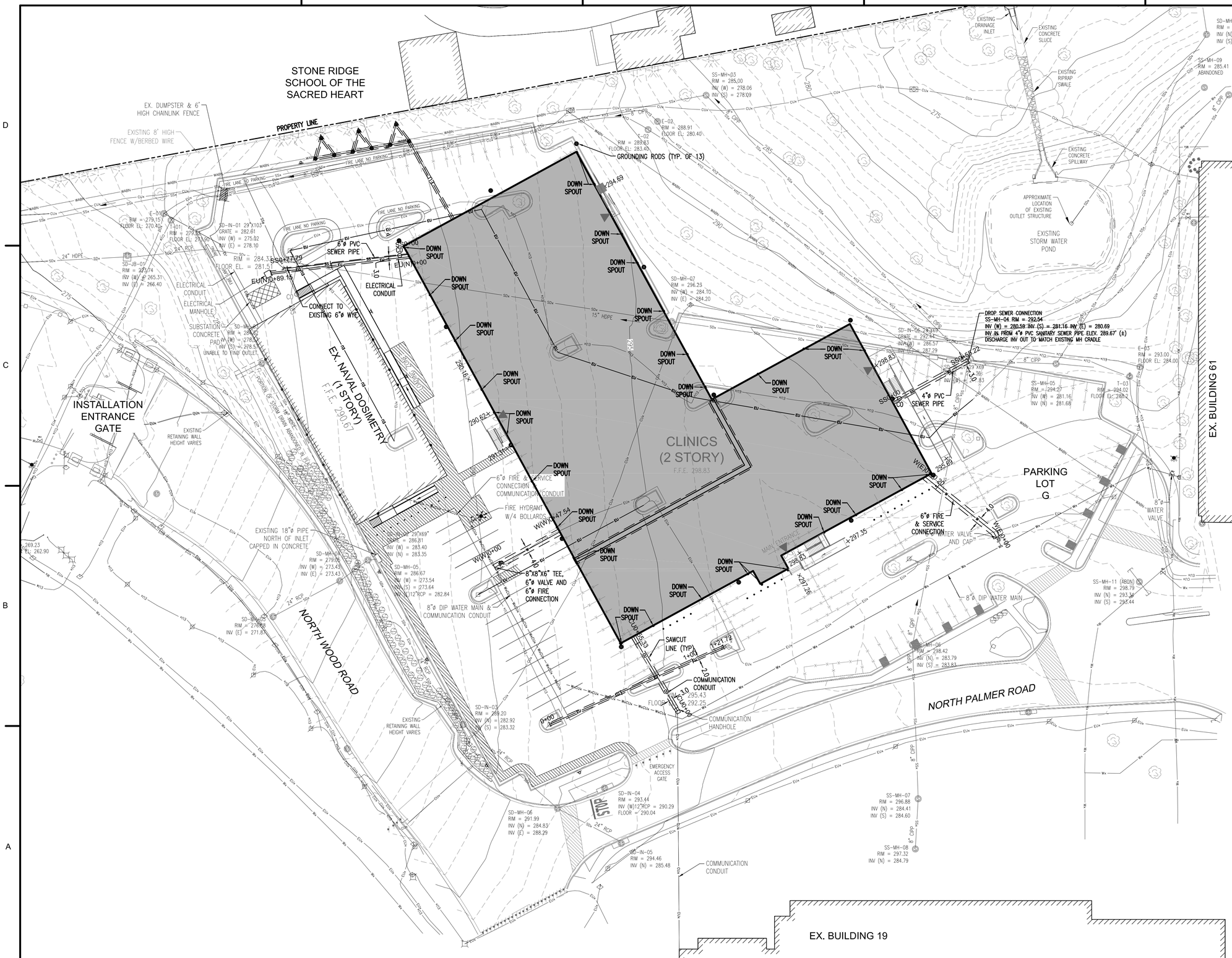

LEGEND – EXISTING:

- EXISTING CONTOUR MAJOR
- EXISTING STORM SEWER LINE
- EXISTING STORM SEWER MANHOLE
- EXISTING STORM DRAIN LINE
- EXISTING STORM DRAIN MANHOLE
- EXISTING STORM CATCH BASIN
- EXISTING ELECTRICAL CONDUIT
- EXISTING LIGHT POLE
- EXISTING ELECTRICAL MANHOLE
- EXISTING ELECTRICAL HAND HOLE
- EXISTING COMMUNICATION CONDUIT
- EXISTING COMMUNICATION MANHOLE
- EXISTING COMMUNICATION HAND HOLE
- EXISTING WATER LINE
- EXISTING ABANDONED WATER LINE
- EXISTING FIRE HYDRANT
- EXISTING WATER VALVE
- EXISTING CHAIN LINK FENCE
- EXISTING DECIDUOUS TREE
- EXISTING CONIFEROUS TREE
- EXISTING SHRUB
- EXISTING GATE POST
- EXISTING SIGN POST

LEGEND – PROPOSED:

- SANITARY SEWER LINE
- ELECTRICAL CONDUIT
- COMMUNICATION CONDUIT
- WATER LINE
- BUILDING ENTRANCE/EXIT

EXISTING SURVEY NOTES:

1. PLANIMETRIC AND TOPOGRAPHIC FEATURES SHOWN ARE TAKEN FROM AN ACTUAL FIELD SURVEY PERFORMED BY HDR IN DECEMBER 2012.

2. HORIZONTAL CONTROL SYSTEM BASED ON MARYLAND STATE PLANE NAD 83 FEET. VERTICAL CONTROL SYSTEM BASED ON NAVD 88 FEET.

3. PROPERTY LINE INFORMATION SHOWN HEREIN OBTAINED FROM SET OF PLANS TITLED "TRAFFIC MITIGATION MEASURES FOR GATES 1 AND 2" DATED AUGUST 15, 2011 PROVIDED BY NAVFAC.

4. UTILITY SURVEY FOR WATER, ELECTRICAL AND COMMUNICATION PROVIDED BY SO-DEEP UTILITY ENGINEERING COMPANY, 8397 EUCLID AVENUE, MANASSAS PARK, VA 20111, (703) 361-6005 AND DATED 1/22/2013. SEE SHEET C-101.

5. THE LOCATION OF UNDERGROUND UTILITIES ARE APPROXIMATE. CONTRACTOR TO FIELD VERIFY. ALL LOCATIONS ILLUSTRATED ARE BASED UPON ABOVE GROUND STRUCTURES THAT WERE VISIBLE AND ACCESSIBLE IN THE FIELD.

6. CONTRACTOR TO FILED VERIFY DEPTHS OF EXISTING ELECTRICAL CONDUITS AND/OR CABLES.

7. IN CASE OF CONFLICTS BETWEEN PROPOSED UTILITIES AND EXISTING ELECTRICAL AND TELECOM LINES, EXISTING ELECTRICAL AND TELECOM LINES SHOULD BE LOWERED TO HAVE A MINIMUM OF 1 FT. VERTICAL CLEARANCE TO PROPOSED UTILITIES. THIS WORK SHALL NOT BE AT ANY EXPENSE TO THE CONTRACTOR.

UTILITIES PLAN NOTES:

1. ASPHALT FOR THE REPAIR OF THE ROADS OR PARKING LOT SHALL MATCH EXISTING. ALL MATERIALS AND INSTALLATION SHALL BE PER MDOT STANDARDS AND SPECIFICATIONS.

2. REFER TO ARCHITECTURAL SHEETS A-522 AND A-524 FOR DOWNSPOUT AND BOOT DETAILS.

SYM	DESCRIPTION	DATE
	FINAL CORRECTED SET	3/26/14
	100% FINAL DESIGN SUBMISSION	2/3/14
	65% VE SUBMISSION	11/25/13
	65% SUBMITTAL	4/26/13
	35% SUBMITTAL	3/8/13
	20% SUBMITTAL	1/18/13

NAVFAC

STATE OF MARYLAND — MICHAEL W. PUGH — No. 42609 — PROFESSIONAL ENGINEER — 3/24/14

HDR
ARCHITECTURE | ENGINEERING & CONSULTING
1101 KING STREET
SUITE 400
ALEXANDRIA, VIRGINIA 22314
703-518-8500

APPROVED
FOR COMMANDER NAVFAC
ACTIVITY
SATISFACTORY TO DATE
DES. MMM DRW. NI CHK. MWP
PM/DM CHEMENJU/HILL
BRANCH MANAGER N/A
CHIEF ENG/ARCH TOM COX

DEPARTMENT OF THE NAVY
NAVAL FACILITIES ENGINEERING COMMAND ~ NAVFAC WASHINGTON
COMPONENT NAME NSA/Bethesda
NAVAL FACILITIES ENGINEERING COMMAND NSA - BETHESDA, MD
BETHESDA, MD
P125 - TEMPORARY MEDICAL FACILITIES
PACKAGE 2 - CLINIC BUILDING
CIVIL - UTILITIES SITE PLAN

SCALE: 1" = 30'
EPROJECT NO.: 1151333
CONSTR. CONTR. NO. N62470-09-D-9044
NAVFAC DRAWING NO. 13065747
SHEET OF 0
CU-101

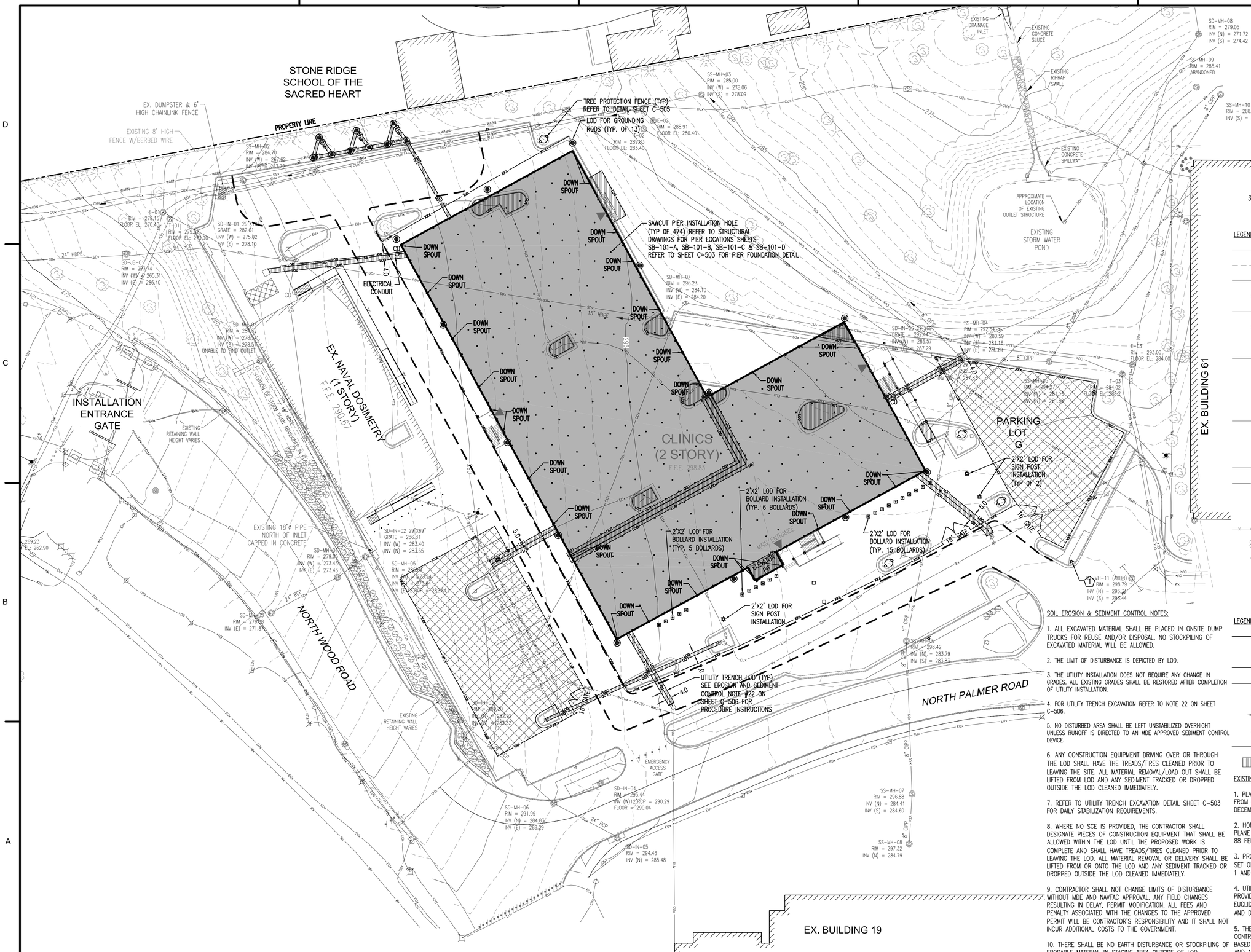

LEGEND – EXISTING:

- EXISTING CONTOUR MAJOR
- EXISTING CONTOUR MINOR
- EXISTING STORM SEWER LINE
- EXISTING STORM SEWER MANHOLE
- EXISTING STORM DRAIN LINE
- EXISTING STORM DRAIN MANHOLE
- EXISTING STORM CATCH BASIN
- EXISTING ELECTRICAL CONDUIT
- EXISTING LIGHT POLE
- EXISTING ELECTRICAL MANHOLE
- EXISTING ELECTRICAL HAND HOLE
- EXISTING COMMUNICATION CONDUIT
- EXISTING COMMUNICATION MANHOLE
- EXISTING COMMUNICATION HAND HOLE
- EXISTING WATER LINE
- EXISTING ABANDONED WATER LINE
- EXISTING FIRE HYDRANT
- EXISTING WATER VALVE
- EXISTING CHAIN LINK FENCE
- EXISTING DECIDUOUS TREE
- EXISTING CONIFEROUS TREE
- EXISTING SHRUB
- EXISTING GATE POST
- EXISTING SIGN POST

LEGEND – PROPOSED:

- SANITARY SEWER LINE
- ELECTRICAL CONDUIT
- COMMUNICATION CONDUIT
- WATER LINE
- BUILDING ENTRANCE/EXIT
- BUILDING RAMP
- TREE PROTECTION FENCE
- LIMIT OF DISTURBANCE
- SAME DAY LOD STABILIZATION

SOIL EROSION & SEDIMENT CONTROL NOTES:

1. ALL EXCAVATED MATERIAL SHALL BE PLACED IN ONSITE DUMP TRUCKS FOR REUSE AND/OR DISPOSAL. NO STOCKPILING OF EXCAVATED MATERIAL WILL BE ALLOWED.

2. THE LIMIT OF DISTURBANCE IS DEPICTED BY LOD.

3. THE UTILITY INSTALLATION DOES NOT REQUIRE ANY CHANGE IN GRADES. ALL EXISTING GRADES SHALL BE RESTORED AFTER COMPLETION OF UTILITY INSTALLATION.

4. FOR UTILITY TRENCH EXCAVATION REFER TO NOTE 22 ON SHEET C-506.

5. NO DISTURBED AREA SHALL BE LEFT UNSTABILIZED OVERNIGHT UNLESS RUNOFF IS DIRECTED TO AN MDE APPROVED SEDIMENT CONTROL DEVICE.

6. ANY CONSTRUCTION EQUIPMENT DRIVING OVER OR THROUGH THE LOD SHALL HAVE THE TREADS/TIRES CLEANED PRIOR TO LEAVING THE SITE. ALL MATERIAL REMOVAL/LOAD OUT SHALL BE LIFTED FROM LOD AND ANY SEDIMENT TRACKED OR DROPPED OUTSIDE THE LOD CLEANED IMMEDIATELY.

7. REFER TO UTILITY TRENCH EXCAVATION DETAIL SHEET C-503 FOR DAILY STABILIZATION REQUIREMENTS.

8. WHERE NO SCE IS PROVIDED, THE CONTRACTOR SHALL DESIGNATE PIECES OF CONSTRUCTION EQUIPMENT THAT SHALL BE ALLOWED WITHIN THE LOD UNTIL THE PROPOSED WORK IS COMPLETE AND SHALL HAVE TREADS/TIRES CLEANED PRIOR TO LEAVING THE LOD. ALL MATERIAL REMOVAL OR DELIVERY SHALL BE LIFTED FROM OR ONTO THE LOD AND ANY SEDIMENT TRACKED OR DROPPED OUTSIDE THE LOD CLEANED IMMEDIATELY.

9. CONTRACTOR SHALL NOT CHANGE LIMITS OF DISTURBANCE WITHOUT MDE AND NAVFAC APPROVAL. ANY FIELD CHANGES RESULTING IN DELAY, PERMIT MODIFICATION, ALL FEES AND PENALTY ASSOCIATED WITH THE CHANGES TO THE APPROVED PERMIT WILL BE CONTRACTOR'S RESPONSIBILITY AND IT SHALL NOT INCUR ADDITIONAL COSTS TO THE GOVERNMENT.

10. THERE SHALL BE NO EARTH DISTURBANCE OR STOCKPILING OF ERODABLE MATERIAL IN STAGING AREA OUTSIDE OF LOD.

EXISTING SURVEY NOTES:

1. PLANIMETRIC AND TOPOGRAPHIC FEATURES SHOWN ARE TAKEN FROM AN ACTUAL FIELD SURVEY PERFORMED BY HDR IN DECEMBER 2012.

2. HORIZONTAL CONTROL SYSTEM BASED ON MARYLAND STATE PLANE NAD 83 FEET. VERTICAL CONTROL SYSTEM BASED ON NAVD 88 FEET.

3. PROPERTY LINE INFORMATION SHOWN HEREIN OBTAINED FROM SET OF PLANS TITLED "TRAFFIC MITIGATION MEASURES FOR GATES 1 AND 2" DATED AUGUST 15, 2011 PROVIDED BY NAVFAC.

4. UTILITY SURVEY FOR WATER, ELECTRICAL AND COMMUNICATION PROVIDED BY SO-DEEP UTILITY ENGINEERING COMPANY, 8397 EUCLID AVENUE, MANASSAS PARK, VA 20111, (703) 361-6005 AND DATED 1/22/2013. SEE SHEET C-101.

5. THE LOCATION OF UNDERGROUND UTILITIES ARE APPROXIMATE. CONTRACTOR TO FIELD VERIFY. ALL LOCATIONS ILLUSTRATED ARE BASED UPON ABOVE GROUND STRUCTURES THAT WERE VISIBLE AND ACCESSIBLE IN THE FIELD.

SYM	DESCRIPTION	DATE
	FINAL CORRECTED SET	3/26/14
	100% FINAL DESIGN SUBMISSION	2/3/14
	65% VE SUBMISSION	11/25/13
	65% SUBMITTAL	4/26/13
	35% SUBMITTAL	3/8/13
	20% SUBMITTAL	1/18/13

NAVFAC

STATE OF MARYLAND — MICHAEL W. PUGH — No. 42609 — PROFESSIONAL ENGINEER — 3/24/14

HDR

ARCHITECTURE | ENGINEERING & CONSULTING

1101 KING STREET
SUITE 400
ALEXANDRIA, VIRGINIA 22314
703-518-8500

APPROVED

FOR COMMANDER NAVFAC

ACTIVITY

SATISFACTORY TO DATE

DES MMM DRW NI CHK MWP

PMDM CHEMENJU/HILL

BRANCH MANAGER N/A

CHIEF ENGARCH TOM COX

DEPARTMENT OF THE NAVY
NAVAL FACILITIES ENGINEERING COMMAND
COMPONENT NAME NAVAL FACILITIES ENGINEERING COMMAND ~ NAVFAC WASHINGTON
NSA - BETHESDA, MD

NSA/Bethesda

BETHESDA, MD

P125 - TEMPORARY MEDICAL FACILITIES
PACKAGE 2 - CLINIC BUILDING

CIVIL - SOIL EROSION AND SEDIMENT CONTROL PLAN

SCALE: 1" = 30'

EPROJECT NO.: 1151333

CONSTR. CONTR. NO. N62470-09-D-9044

NAVFAC DRAWING NO. 13065748

SHEET OF 0

CG-101

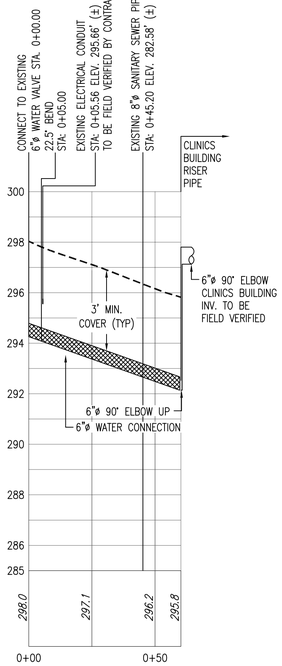

6"ø FIRE WATER MAIN PROFILE (EAST)

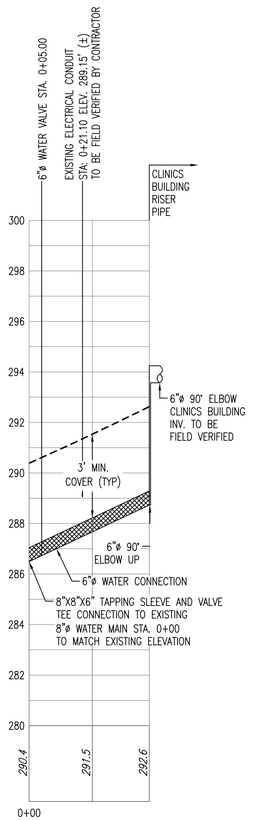

6"ø FIRE & SERVICE WATER MAIN PROFILE (WEST)

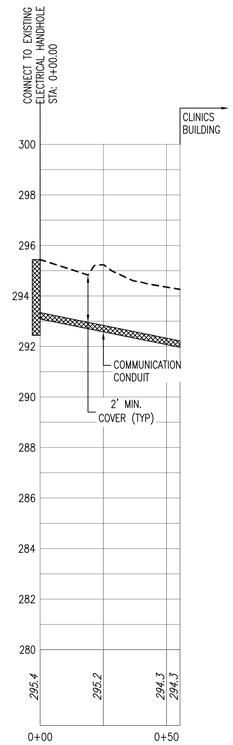

COMMUNICATION CONDUIT PROFILE

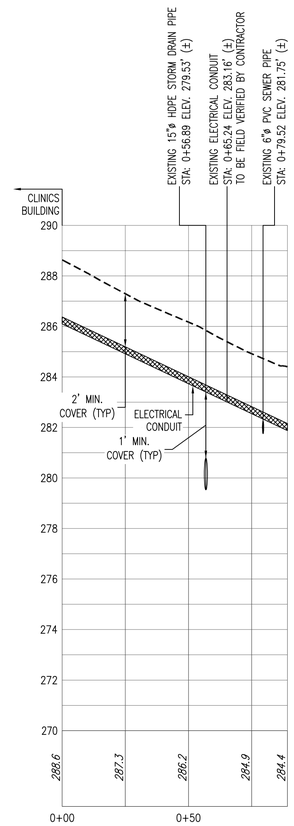

ELECTRICAL CONDUIT PROFILE (WEST)

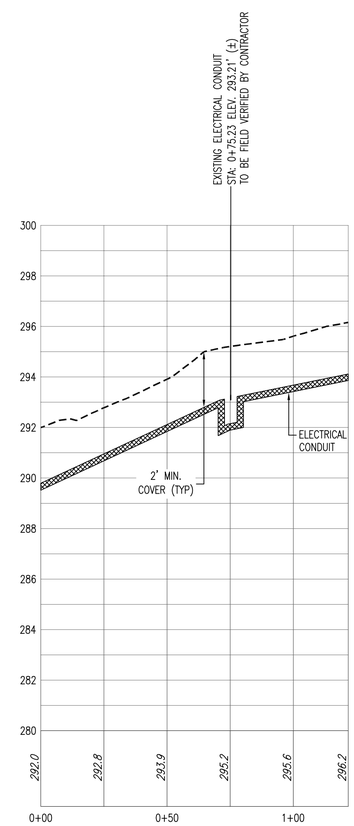

ELECTRICAL CONDUIT PROFILE (SOUTH)

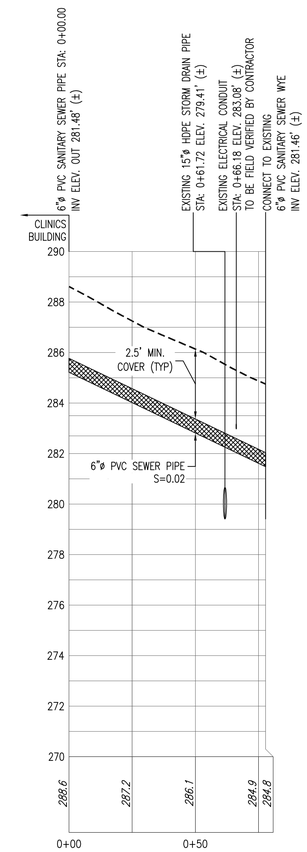

6"ø SANITARY SEWER PROFILE TO EXISTING 6"ø WYE

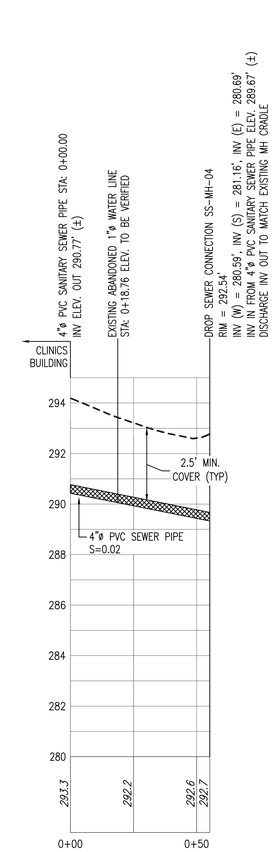

4"ø SANITARY SEWER PROFILE TO EXISTING SS-MH-04

LEGEND:

- - - - - EXISTING SURFACE

293.3 EXISTING ELEVATION AT STATION

1+00 SECTION STATIONING (FEET)

NOTES:

1. STATIONING, ELEVATIONS AND DISTANCES SHOULD BE CONSIDERED APPROXIMATE.

2. PROPOSED ELECTRICAL CONDUIT SHALL HAVE A VERTICAL CLEARANCE OF 1 FOOT BELOW EXISTING UTILITIES.

3. IN CASE OF CONFLICT BETWEEN EXISTING ABANDONED WATER LINE AND PROPOSED 4"ø SEWER PIPE, THE WATER LINE SHALL BE CUT AND CAP AT THE TRENCH LINITS.

4. ALL WATER PIPES SHOWN ON THIS SHEET ARE DUCTILE IRON CLASS 53.

5. ALL SEWER PIPES SHOWN ON THIS SHEET ARE PVC SDR 35.

6. ALL ELECTRIC AND TELECOMMUNICATION CONDUITS SHOWN ON THIS SHEET ARE PVC SCHEDULE 80.

3' 2' 1' 0 3'
VERTICAL SCALE:1"= 3'-0"

30' 20' 10' 0 30'
HORIZONTAL SCALE:1"= 30'-0"

SYM	DESCRIPTION	DATE
	FINAL CORRECTED SET	3/26/14
	100% FINAL DESIGN SUBMISSION	2/3/14
	65% VE SUBMISSION	11/25/13
	65% SUBMITTAL	4/26/13
	35% SUBMITTAL	3/8/13
	20% SUBMITTAL	1/18/13

NAVFAC

STATE OF MARYLAND MICHAEL W. FUGATE No. 42608 PROFESSIONAL ENGINEER 3/24/14

HDR
ARCHITECTURE | ENGINEERING & CONSULTING
1101 KING STREET
SUITE 400
ALEXANDRIA, VIRGINIA 22314
703-518-8500

APPROVED

FOR COMMANDER NAVFAC

ACTIVITY

SATISFACTORY TO DATE

DES MMM DRW NI CHK MWP

PM/DM CHEMENJU/HILL

BRANCH MANAGER N/A

CHIEF ENG/ARCH TOM COX

DEPARTMENT OF THE NAVY
NAVAL FACILITIES ENGINEERING COMMAND
COMPONENT NAME
NSA/Bethesda

NAVAL FACILITIES ENGINEERING COMMAND ~ NAVFAC WASHINGTON
NSA - BETHESDA, MD

BETHESDA, MD

P125 - TEMPORARY MEDICAL FACILITIES
PACKAGE 2 - CLINIC BUILDING

CIVIL - UTILITIES PROFILES

SCALE: AS SHOWN

EPROJECT NO.: 1151333

CONSTR. CONTR. NO. N62470-09-D-9044

NAVFAC DRAWING NO. 13065752

SHEET OF 0

CU-301

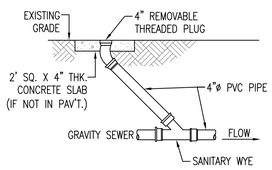

SANITARY SEWER CLEANOUT DETAIL

SCALE: NOT TO SCALE

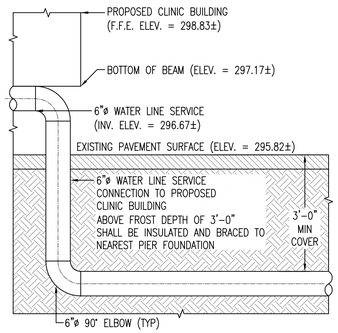

6"ø FIRE WATER MAIN BUILDING CONNECTION DETAIL (EAST)

SCALE: NOT TO SCALE

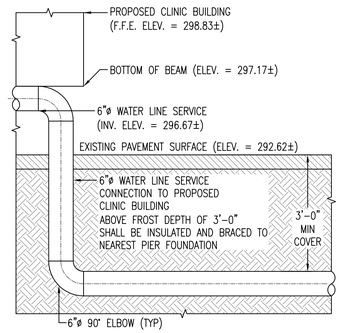

6"ø FIRE & SERVICE WATER MAIN BUILDING CONNECTION DETAIL (WEST)

SCALE: NOT TO SCALE

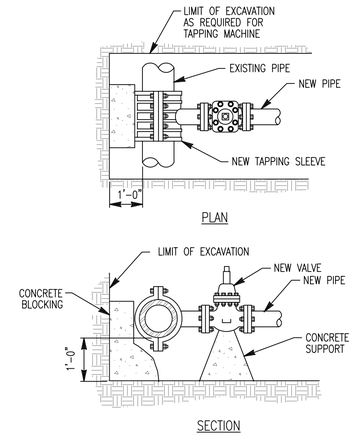

INSTALLATION DETAIL TAPPING SLEEVE AND VALVE

SCALE: NOT TO SCALE

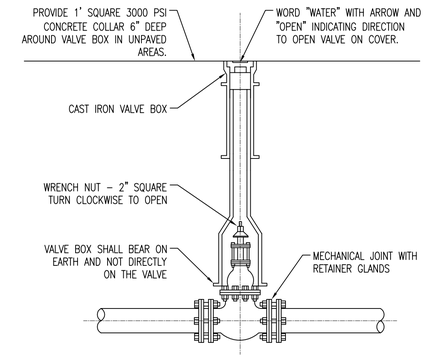

GATE VALVE INSTALLATION DETAIL

SCALE: NOT TO SCALE

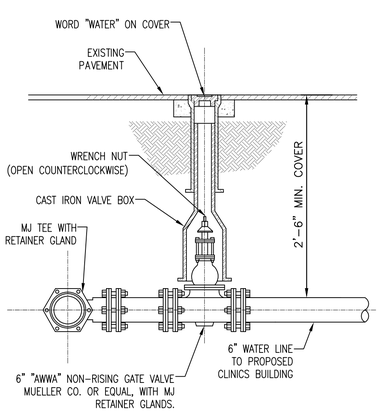

WATER MAIN CONNECTION DETAIL (TO CLINICS BUILDING)

SCALE: NOT TO SCALE

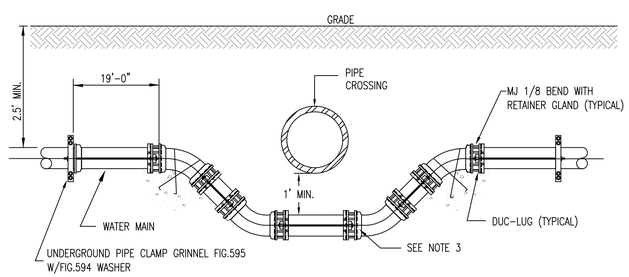

NOTES:

1. RETAINER GLANDS REQUIRED ONLY IN CONJUNCTION WITH CLDI PIPE
2. WATER LINES SHALL PASS 2 FEET ABOVE SEWER LINES.
3. ANY PIPE JOINT WITHIN 3 FEET OF WATER MAIN SHALL BE CONCRETE ENCASED 6" ALL AROUND PIPE 1' EITHER SIDE OF JOINT.

TYPICAL WATER OFFSET UNDER UTILITY DETAIL

SCALE: NOT TO SCALE

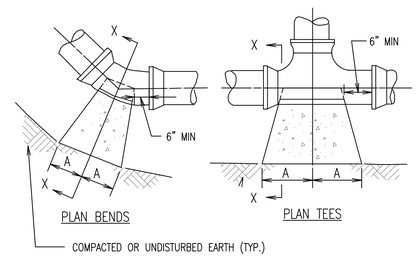

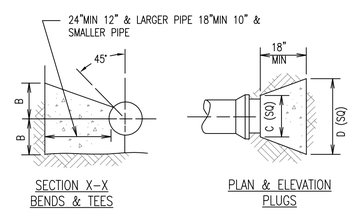

NOTES:

1. ALL CONCRETE MUST BE @ 3000 psi.

SIZE	1/4 BENDS		1/8 BENDS		1/16 BENDS		TEES		PLUGS	
	A	B	A	B	A	B	A	B	C	D
6"	16"	10"	9"	10"	6"	8"	10"	12"	10"	21"
8"	22"	13"	12"	13"	8"	10"	13"	16"	12"	29"
10"	26"	17"	14"	17"	10"	13"	16"	20"	14"	36"
12"	29"	21"	16"	21"	11"	16"	18"	24"	16"	41"
14"	35"	24"	19"	24"	12"	20"	22"	27"	18"	48"
16"	38"	27"	21"	27"	12"	24"	24"	30"	20"	54"

THRUST BLOCKS DETAILS

SCALE: NOT TO SCALE

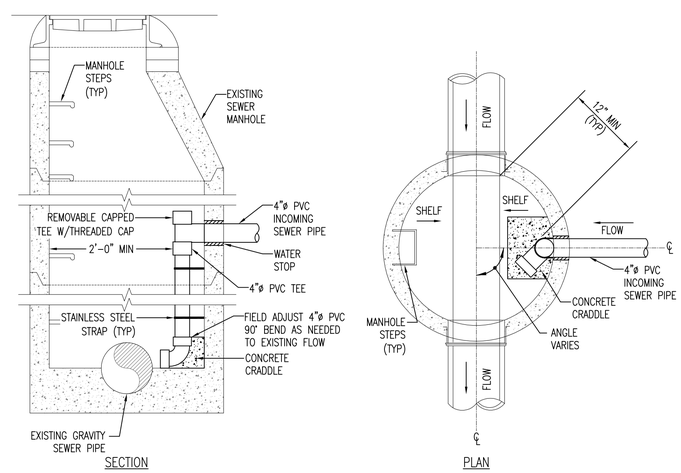

NOTES:

1. STAINLESS STEEL STRAPS SHALL BE USED ON ALL DROPS GREATER THAN 5 FEET AT 18" INTERVALS.
2. PIPE SIZE FOR DROP TO EQUAL INFLOW SEWER PIPE SIZE.
3. SAW-CUT OR DRILL ALL HOLES FOR PIPE AND BOLTS.

STANDARD SEWER INSIDE DROP MANHOLE

SCALE: NOT TO SCALE

SYM	DESCRIPTION	DATE
	FINAL CORRECTED SET	3/26/14
	100% FINAL DESIGN SUBMISSION	2/3/14
	65% VE SUBMISSION	11/25/13
	65% SUBMITTAL	4/26/13
	35% SUBMITTAL	3/8/13
	20% SUBMITTAL	1/18/13

NAVFAC

STATE OF MARYLAND MICHAEL W. YUSKO No. 42603 PROFESSIONAL ENGINEER
3/24/14

HDR
ARCHITECTURE | ENGINEERING & CONSULTING
1101 KING STREET
SUITE 400
ALEXANDRIA, VIRGINIA 22314
703-518-8500

APPROVED
FOR COMMANDER NAVFAC
ACTIVITY
SATISFACTORY TO DATE
DES MMM DRW NI CHK MWP
PM/DM CHEMENJU/HILL
BRANCH MANAGER N/A
CHIEF ENG/ARCH TOM COX

DEPARTMENT OF THE NAVY
NAVAL FACILITIES ENGINEERING COMMAND
COMPONENT NAME NSA/Bethesda
NAVAL FACILITIES ENGINEERING COMMAND – NAVFAC WASHINGTON
NSA - BETHESDA, MD
BETHESDA, MD
P125 - TEMPORARY MEDICAL FACILITIES
PACKAGE 2 - CLINIC BUILDING
CIVIL - CONSTRUCTION DETAILS

SCALE: NOT TO SCALE
EPROJECT NO.: 1151333
CONSTR. CONTR. NO. N62470-09-D-9044
NAVFAC DRAWING NO. 13065753
SHEET OF 0
C-501

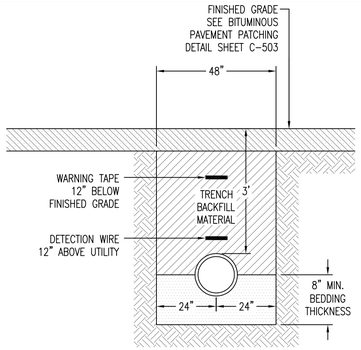

NOTES:

1. PIPE BEDDING SHALL BE CLEAN, COURSE, GRAINED SAND.
2. REFER TO UTILITY EXCAVATION DETAIL SHEET C-503.

WATER MAIN BEDDING DETAIL

SCALE: NOT TO SCALE

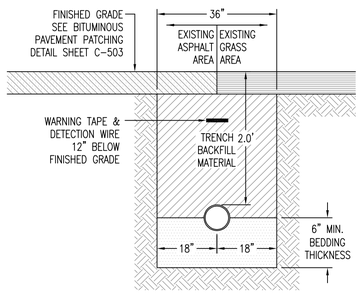

NOTES:

1. PIPE BEDDING SHALL BE CLEAN, COURSE, GRAINED SAND.
2. REFER TO UTILITY EXCAVATION DETAIL SHEET C-503.

COMMUNICATION CONDUIT BEDDING DETAIL

SCALE: NOT TO SCALE

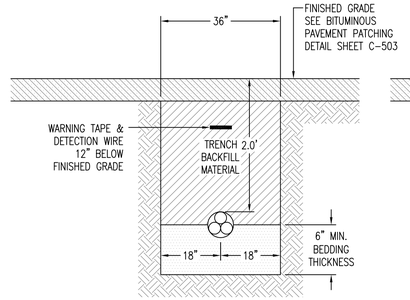

NOTES:

1. PIPE BEDDING SHALL BE CLEAN, COURSE, GRAINED SAND.
2. REFER TO UTILITY EXCAVATION DETAIL SHEET C-503.

ELECTRICAL CONDUIT BEDDING DETAIL

SCALE: NOT TO SCALE

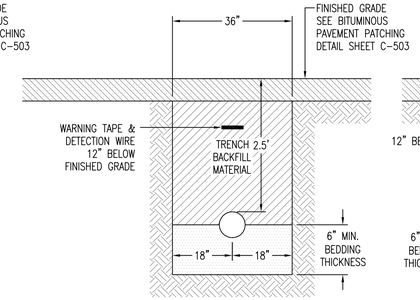

NOTES:

1. PIPE BEDDING SHALL BE CLEAN, COURSE, GRAINED SAND.
2. REFER TO UTILITY EXCAVATION DETAIL SHEET C-503.

SEWER PIPE BEDDING DETAIL

SCALE: NOT TO SCALE

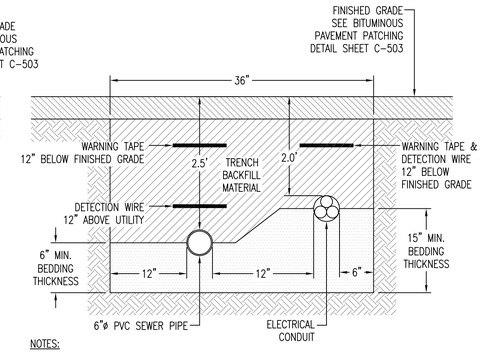

NOTES:

1. PIPE BEDDING SHALL BE CLEAN, COURSE, GRAINED SAND.
2. REFER TO UTILITY EXCAVATION DETAIL SHEET C-503.

SEWER PIPE AND ELECTRICAL CONDUIT BEDDING DETAIL

SCALE: NOT TO SCALE

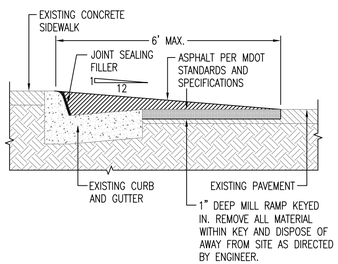

HANDICAP RAMP DETAIL

SCALE: NOT TO SCALE

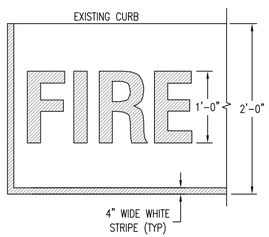

NOTES:

1. "FIRE LANE - NO PARKING" LETTERING PAINTED IN WHITE.

FIRE LANE STRIPING DETAIL

SCALE: NOT TO SCALE

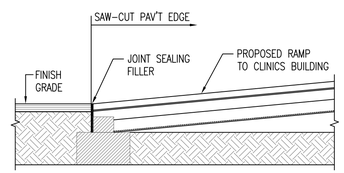

RAMP CONNECTION AT GRADE DETAIL

SCALE: NOT TO SCALE

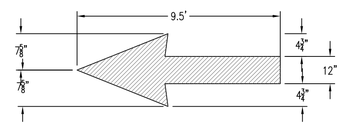

NOTES:

1. PAINT SIGNS IN CENTER OF LANE - SEE SITE PLAN
2. PAINT WITH WHITE HIGHWAY PAINT SEE SPECIFICATIONS - TWO COATS MIN.

STRAIGHT ARROW

SCALE: NOT TO SCALE

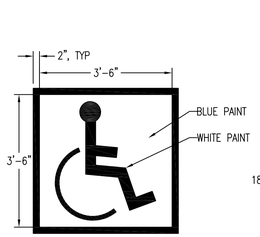

PAINTED HANDICAP
SYMBOL DETAIL

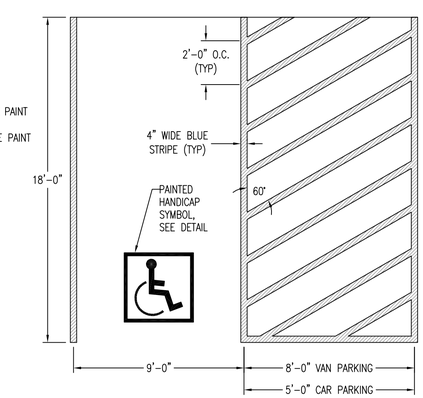

HANDICAP PARKING SPACE DETAIL

SCALE: NOT TO SCALE

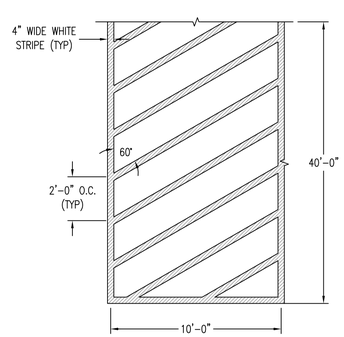

LOADING ZONE STRIPING DETAIL

SCALE: NOT TO SCALE

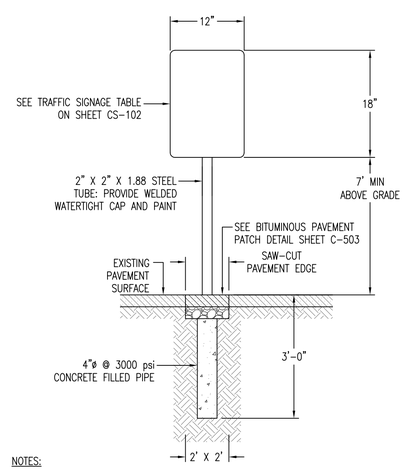

NOTES:

1. SIGN POST TO BE LOCATED 2' FROM FACE OF CURB IN GRASS AREAS.
2. CONTRACTOR TO DIG NO MORE THAN 2' BY 2' HOLE TO INSTALL SIGN POST.

SIGN DETAIL

SCALE: NOT TO SCALE

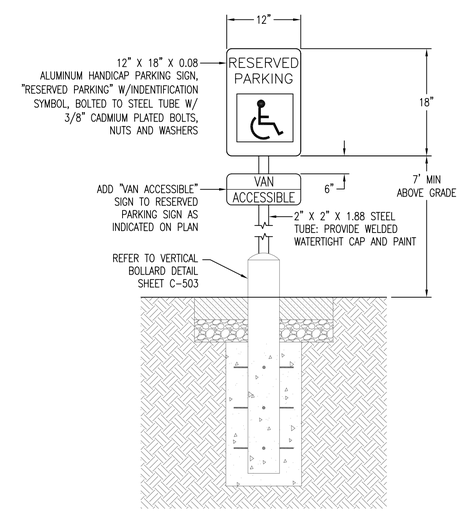

NOTES:

1. HANDICAP PARKING SIGN SHALL CONFORM WITH CURRENT STATE AND LOCAL CODES AND REGULATIONS.
2. CONTRACTOR TO DIG NO MORE THAN 2' BY 2' HOLE TO INSTALL SIGN POST.

RESERVED PARKING SIGN DETAIL

SCALE: NOT TO SCALE

SYM	DESCRIPTION	DATE
	FINAL CORRECTED SET	3/26/14
	100% FINAL DESIGN SUBMISSION	2/3/14
	65% VE SUBMISSION	11/25/13
	65% SUBMITTAL	4/26/13
	35% SUBMITTAL	3/8/13
	20% SUBMITTAL	1/18/13

NAVFAC

STATE OF MASSACHUSETTS
MICHAEL W. PUGH
No. 42509
PROFESSIONAL ENGINEER
3/24/14

HDR
ARCHITECTURE | ENGINEERING & CONSULTING
1101 KING STREET
SUITE 400
ALEXANDRIA, VIRGINIA 22314
703-518-8500

APPROVED
FOR COMMANDER NAVFAC
ACTIVITY
SATISFACTORY TO DATE

DES MMM DRW NI CHK MWP
PM/DM CHEMENJU/HILL
BRANCH MANAGER N/A
CHIEF ENG/ARCH TOM COX

DEPARTMENT OF THE NAVY
NAVAL FACILITIES ENGINEERING COMMAND ~ NAVFAC WASHINGTON
COMPONENT NAME
NAVAL FACILITIES ENGINEERING COMMAND
NSA~ BETHESDA, MD
NSA/Bethesda
BETHESDA, MD
P125 - TEMPORARY MEDICAL FACILITIES
PACKAGE 2 - CLINIC BUILDING
CIVIL - CONSTRUCTION DETAILS

SCALE: NOT TO SCALE
EPROJECT NO.: 1151333
CONSTR. CONTR. NO.: N62470-09-D-9044
NAVFAC DRAWING NO.: 13065754
SHEET OF 0
C-502

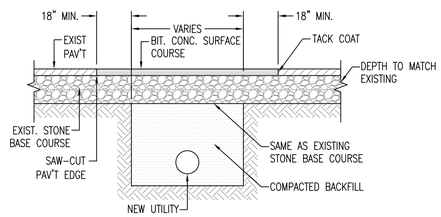

NOTES:

1. ASPHALT FOR BITUMINOUS PAVEMENT PATCH SHALL BE IN ACCORDANCE WITH MDOT STANDARDS AND SPECIFICATIONS.

2. BITUMINOUS PAVEMENT STONE BASE BEDDING SHALL BE CLEAN, COURSE, GRAINED SAND, IN ACCORDANCE WITH MDOT STANDARDS AND SPECIFICATIONS. GRADATION OF AGGREGATE TO MATCH EXISTING.

BITUMINOUS PAVEMENT PATCHING DETAIL

SCALE: NOT TO SCALE

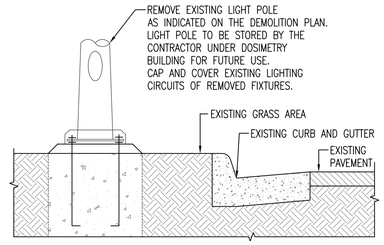

NOTES:

1. ABANDON IN PLACE EXISTING ELECTRICAL CONDUIT THAT IT IS LOCATED IN BETWEEN LIGHT POLES.

LAMP POST DEMOLITION/ PRESERVATION DETAIL

SCALE: NOT TO SCALE

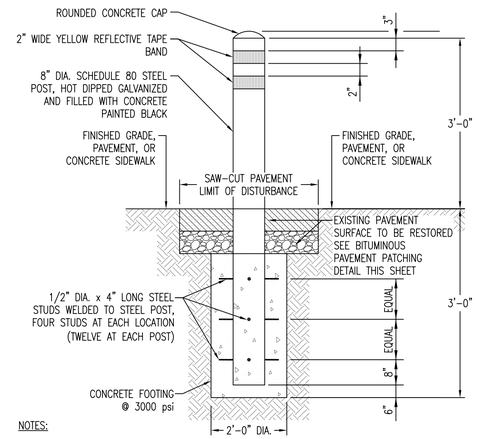

NOTES:

1. CONTRACTOR TO DIG NO MORE THAN 2' BY 2' HOLE TO INSTALL SIGN POST.

VERTICAL BOLLARD DETAIL

SCALE: NOT TO SCALE

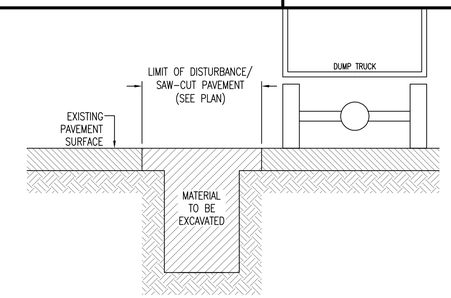

NOTES:

1. SAW-CUT EXISTING PAVEMENT ALONG LIMIT OF DISTURBANCE (LOD) SHOWN ON PLANS. REMOVE ASPHALT MATERIALS, PLACE DIRECTLY IN DUMP TRUCK FOR REMOVAL FROM SITE.

2. EXCAVATE THE TRENCH SECTIONS AND PLACE THE EXCAVATED MATERIALS IN DUMP TRUCK ONSITE FOR REUSE AND/OR DISPOSAL. NO STOCKPILING OF ERODIBLE MATERIALS WILL BE ALLOWED ON SITE.

3. DUMP TRUCKS SHALL REMAIN ON PAVED SURFACES ONLY.

4. TRENCHES FOR UTILITY INSTALLATION SHALL BE BACKFILLED, COMPACTED AND STABILIZED AT THE END OF EACH WORKING DAY. NO MORE TRENCH SHALL BE OPENED THAN CAN BE COMPLETED IN THE SAME DAY.

5. AT THE END OF EACH WORKING DAY THE PAVEMENT AREA SURROUNDING THE UTILITY LINE EXCAVATIONS SHALL BE BROOM SWEPT CLEAN AND ANY ACCUMULATED SEDIMENT SHALL BE DISPOSED OF PROPERLY.

UTILITY TRENCH EXCAVATION DETAIL

SCALE: NOT TO SCALE

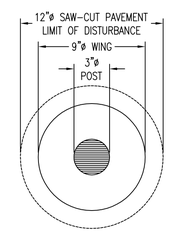

PLAN

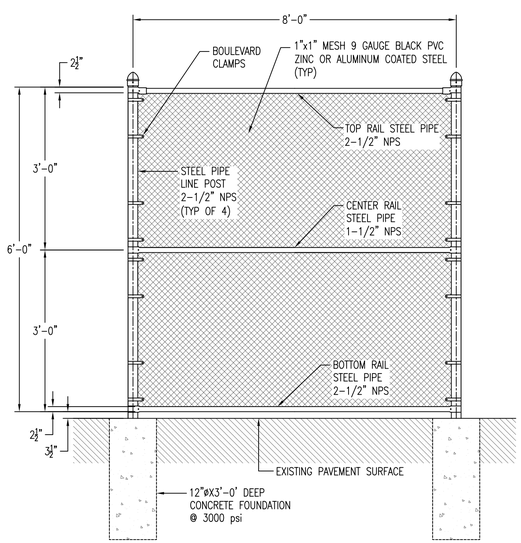

CHAINLINK FENCE FOR DUMPSTER ENCLOSURE DETAIL

SCALE: NOT TO SCALE

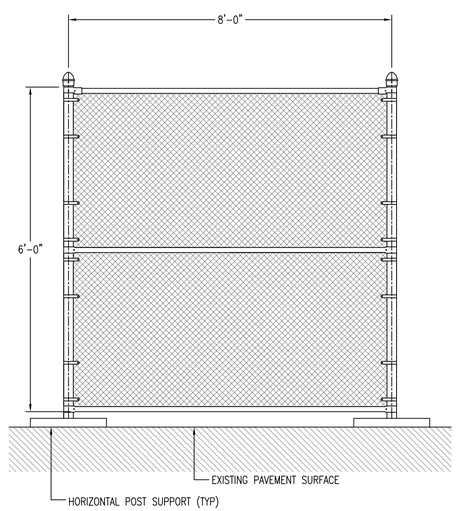

NOTES:

1. FREE STANDING MOVABLE CHAINLINK FENCE SHALL BE INSTALLED AT LOCATIONS INDICATED ON SHEET CS-101 – STAGING PLAN.

2. NO PAVEMENT DISTURBANCE ALLOWED.

FREE STANDING MOVABLE CHAINLINK FENCE

SCALE: NOT TO SCALE

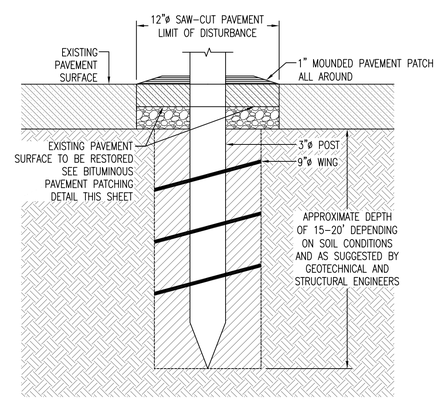

SECTION

NOTES:

1. CONTRACTOR SHALL BORE A HOLE 12" IN DIAMETER THROUGH THE PAVEMENT SURFACE AT EACH PIER FOUNDATION LOCATION.

2. CARE SHALL BE TAKEN TO TO COLLECT AND REMOVE ALL DEBRIS FROM BORING HOLE.

3. AT COMPLETION OF DRILLING OPERATION PAVEMENT A MOUNDED PATCH SHALL BE APPLIED TO ANULAR RING SURROUNDING POST TO EDGE OF PAVEMENT CUT. ASPHALT FOR PAVEMENT PATCH SHALL BE IN ACCORDANCE WITH MDOT STANDARDS AND SPECIFICATIONS.

4. PIERS TO BE INSTALLED IN ACCORDANCE WITH THE BUILDING FOUNDATION PLAN.

PIER FOUNDATION DETAIL

SCALE: NOT TO SCALE

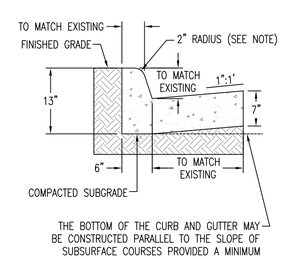

NOTES:

1. ALL CONCRETE MUST BE @ 3000 psi.

CURB AND GUTTER DETAIL

SCALE: NOT TO SCALE

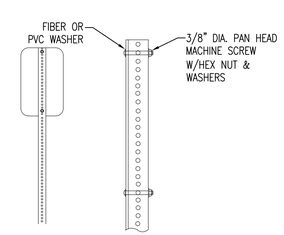

SIGN PANEL ATTACHMENT DETAIL

SCALE: NOT TO SCALE

SYM	DESCRIPTION	DATE
	FINAL CORRECTED SET	3/26/14
	100% FINAL DESIGN SUBMISSION	2/3/14
	65% VE SUBMISSION	11/25/13
	65% SUBMITTAL	4/26/13
	35% SUBMITTAL	3/8/13
	20% SUBMITTAL	1/18/13

NAVFAC

STATE OF MARYLAND MICHAEL W. PUGH No. 42509 PROFESSIONAL ENGINEER
3/24/14

HDR
ARCHITECTURE | ENGINEERING & CONSULTING
1101 KING STREET
SUITE 400
ALEXANDRIA, VIRGINIA 22314
703-518-8500

APPROVED
FOR COMMANDER NAVFAC
ACTIVITY
SATISFACTORY TO DATE
DES MMM DRW NI CHK MWP
PMDM CHEMENJU/HILL
BRANCH MANAGER N/A
CHIEF ENG/ARCH TOM COX

DEPARTMENT OF THE NAVY
NAVAL FACILITIES ENGINEERING COMMAND
COMPONENT NAME NSA/Bethesda
NAVAL FACILITIES ENGINEERING COMMAND – NAVFAC WASHINGTON
NSA - BETHESDA, MD
BETHESDA, MD
P125 - TEMPORARY MEDICAL FACILITIES
PACKAGE 2 - CLINIC BUILDING
CIVIL - CONSTRUCTION DETAILS

SCALE: NOT TO SCALE
EPROJECT NO.: 1151333
CONSTR. CONTR. NO. N62470-09-D-9044
NAVFAC DRAWING NO. 13065755
SHEET OF 0
C-503

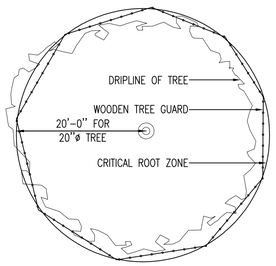

PLAN

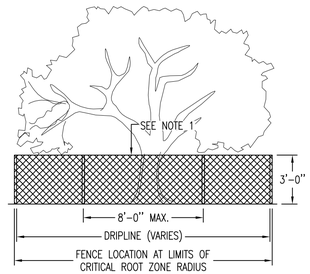

ELEVATION

NOTES:

1. HEAVY VINYL GUARD POSTS SHALL BE U-SHAPED, 13 GAUGE, ROOSTPROOFED STEEL, AND OF 3'-0" OF HEIGHT, MANUFACTURED BY BOUNDARY FENCE AND RAIL SYSTEMS, RICHMOND HILL, NY OR APPROVED EQUAL.

2. GUARD POSTS SHALL BE INSTALLED WITH LINE POST/TAKES SECURELY ATTACHED WITH GALVANIZED OR STAINLESS STEEL SCREWS TO THE WOODEN POSTS AND DRIVEN 18" INTO GROUND.

3. CRITICAL ROOT ZONE (C.R.Z.) RADIUS = 1 FT. PER INCH OF TRUNK DIAMETER.

TREE PROTECTION FENCE DETAIL

SCALE: NOT TO SCALE

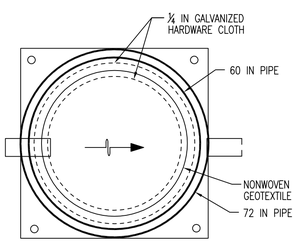

PLAN VIEW

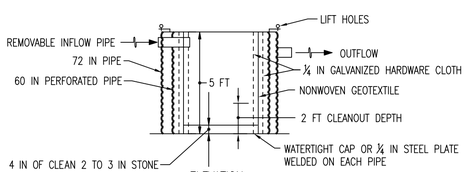

ELEVATION

CONSTRUCTION SPECIFICATIONS

1. PROVIDE 1 CUBIC FOOT OF STORAGE FOR EACH GALLON PER MINUTE OF PUMP CAPACITY. REQUIRED STORAGE VOLUME MAY BE ATTAINED BY PLACEMENT OF TANKS IN PARALLEL WITH INFLOW EVENLY DISTRIBUTED AMONG TANKS. OVERTOPPING OF TANKS IS NOT PERMITTED.

2. USE 60 INCH CORRUGATED METAL OR PLASTIC PIPE WITH 1 INCH DIAMETER PERFORATIONS, 6 INCHES ON CENTER FOR THE INNER PIPE. LINE PIPE WITH NONWOVEN GEOTEXTILE, AS SPECIFIED IN SECTION H-1 MATERIALS, SANDWICHED BETWEEN, AND ATTACHED TO, ¼ INCH HARDWARE CLOTH.

3. OVERLAP GEOTEXTILE 8 INCHES MINIMUM AT VERTICAL SEAM AND AT THE BOTTOM PLATE.

4. ANCHOR GEOTEXTILE AT BOTTOM OF TANK WITH 4 INCHES OF 2 TO 3 INCH CLEAN STONE OR EQUIVALENT RECYCLED CONCRETE.

5. USE 72 INCH CORRUGATED METAL OR PLASTIC OUTER PIPE WITH PERMANENT OUTFLOW PIPE WITH INVERT LOWER THAN INFLOW PIPE

6. INFLOW PIPE MUST DISCHARGE INTO INNER PIPE AND BE REMOVABLE.

7. PLACE TANK ON LEVEL SURFACE AND DISCHARGE TO A STABLE AREA AT A NONEROSIVE RATE.

8. A PORTABLE SEDIMENT TANK REQUIRES FREQUENT MAINTENANCE. REMOVE ACCUMULATED SEDIMENT FROM INNER PIPE WHEN IT REACHES TWO FEET IN DEPTH. IF SYSTEM CLOGS, PULL OUT INNER PIPE, REMOVE ACCUMULATED SEDIMENT, AND REPLACE GEOTEXTILE. KEEP POINT OF DISCHARGE FREE OF EROSION.

PORTABLE SEDIMENT TANK DETAIL

SCALE: NOT TO SCALE

SYM	DESCRIPTION	DATE
	FINAL CORRECTED SET	3/26/14
	100% FINAL DESIGN SUBMISSION	2/3/14
	65% VE SUBMISSION	11/25/13
	65% SUBMITTAL	4/26/13
	35% SUBMITTAL	3/8/13
	20% SUBMITTAL	1/18/13

NAVFAC

STATE OF MARYLAND
MICHAEL W. PUGH
No. 42503
PROFESSIONAL ENGINEER
3/24/14

HDR

ARCHITECTURE | ENGINEERING & CONSULTING
1101 KING STREET
SUITE 400
ALEXANDRIA, VIRGINIA 22314
703-518-8500

APPROVED
FOR COMMANDER NAVFAC
ACTIVITY
SATISFACTORY TO DATE

DES MMM DRW NI CHK MWP
PMDM CHEMENJU/HILL
BRANCH MANAGER N/A
CHIEF ENG/ARCH TOM COX

DEPARTMENT OF THE NAVY
NAVAL FACILITIES ENGINEERING COMMAND
COMPONENT NAME NSA/Bethesda

NAVAL FACILITIES ENGINEERING COMMAND ~ NAVFAC WASHINGTON
NSA - BETHESDA, MD

BETHESDA, MD

P125 - TEMPORARY MEDICAL FACILITIES
PACKAGE 2 - CLINIC BUILDING

CIVIL - SOIL EROSION AND SEDIMENT CONTROL DETAILS

SCALE: NOT TO SCALE
EPROJECT NO.: 1151333
CONSTR. CONTR. NO. N62470-09-D-9044
NAVFAC DRAWING NO. 13065757
SHEET OF 0

C-505

STANDARD EROSION AND SEDIMENT CONTROL NOTES

1. THE CONTRACTOR SHALL NOTIFY THE ADMINISTRATION (WMA) AT (410) 537-3510 SEVEN (7) DAYS BEFORE COMMENCING ANY LAND DISTURBING ACTIVITY AND, UNLESS WAIVED BY THE ADMINISTRATION, SHALL BE REQUIRED TO HOLD A PRE-CONSTRUCTION MEETING BETWEEN PROJECT REPRESENTATIVES AND A REPRESENTATIVE OF WMA.

2. THE CONTRACTOR MUST NOTIFY WMA IN WRITING AND BY TELEPHONE AT THE FOLLOWING POINTS:
A. THE REQUIRED PRE-CONSTRUCTION MEETING.
B. FOLLOWING INSTALLATION OF SEDIMENT CONTROL MEASURES.
C. DURING THE INSTALLATION OF SEDIMENT BASINS (TO BE CONVERTED INTO PERMANENT STORMWATER MANAGEMENT STRUCTURES) AT THE REQUIRED INSPECTION POINTS (SEE INSPECTION CHECKLIST ON PLAN). NOTIFICATION PRIOR TO COMMENCING CONSTRUCTION OF EACH STEP IS MANDATORY.
D. PRIOR TO REMOVAL OR MODIFICATION OF ANY SEDIMENT CONTROL STRUCTURE(S).
E. PRIOR TO REMOVAL OF ALL SEDIMENT CONTROL DEVICES.
F. PRIOR TO FINAL ACCEPTANCE.
G. ANY CHANGES TO THE SEQUENCE MUST BE APPROVED BY MDE/WMA PLAN REVIEW.

3. THE CONTRACTOR SHALL CONSTRUCT ALL EROSION AND SEDIMENT CONTROL MEASURES PER THE APPROVED PLAN AND CONSTRUCTION SEQUENCE AND SHALL HAVE THEM INSPECTED AND APPROVED BY THE AGENCY INSPECTOR OR WMA INSPECTOR PRIOR TO BEGINNING ANY OTHER LAND DISTURBANCES. MINOR SEDIMENT CONTROL DEVICE LOCATION ADJUSTMENTS MAY BE MADE IN THE FIELD WITH THE APPROVAL OF THE WMA INSPECTOR. THE CONTRACTOR SHALL ENSURE THAT ALL RUNOFF FROM DISTURBED AREAS IS DIRECTED TO THE SEDIMENT CONTROL DEVICES AND SHALL NOT REMOVE ANY EROSION OR SEDIMENT CONTROL MEASURE WITHOUT PRIOR PERMISSION FROM WMA INSPECTOR AND AGENCY INSPECTOR. THE CONTRACTOR MUST OBTAIN PRIOR AGENCY AND WMA APPROVAL FOR CHANGES TO THE SEDIMENT CONTROL PLAN AND/OR SEQUENCE OF CONSTRUCTION.

4. THE CONTRACTOR SHALL PROTECT ALL POINTS OF CONSTRUCTION INGRESS AND EGRESS TO PREVENT THE DEPOSITION OF MATERIALS ONTO PUBLIC ROADS. ALL MATERIALS DEPOSITED ONTO PUBLIC ROADS SHALL BE REMOVED IMMEDIATELY.

5. THE CONTRACTOR SHALL INSPECT DAILY AND MAINTAIN CONTINUOUSLY IN AN EFFECTIVE OPERATING CONDITION ALL EROSION AND SEDIMENT CONTROL MEASURES UNTIL SUCH TIMES AS THEY ARE REMOVED WITH PRIOR PERMISSION FROM WMA INSPECTOR AND AGENCY INSPECTOR.

6. ALL SEDIMENT BASINS, TRAP EMBANKMENTS AND SLOPES, PERIMETER DIKES, SWALES AND ALL DISTURBED SLOPES STEEPER OR EQUAL TO 3:1 SHALL BE STABILIZED WITH SOD OR SEED AND ANCHORED STRAW MULCH, OR OTHER APPROVED STABILIZATION MEASURES, AS SOON AS POSSIBLE BUT NO LATER THAN TWO (2) CALENDAR DAYS AFTER ESTABLISHMENT. ALL AREAS DISTURBED OUTSIDE OF THE PERIMETER SEDIMENT CONTROL SYSTEM MUST BE MINIMIZED. MAINTENANCE MUST BE PERFORMED AS NECESSARY TO ENSURE CONTINUED STABILIZATION. (REQUIREMENT FOR STABILIZATION MAY BE REDUCED TO ONE (1) DAY FOR SENSITIVE AREAS.)

7. THE CONTRACTOR SHALL APPLY SOD OR SEED AND ANCHORED STRAW MULCH, OR OTHER APPROVED STABILIZATION MEASURES TO ALL DISTURBED AREAS AND STOCKPILES WITHIN SEVEN (7) CALENDAR DAYS AFTER STRIPPING AND GRADING ACTIVITIES HAVE CEASED IN THE AREA. MAINTENANCE SHALL BE PERFORMED AS NECESSARY TO ENSURE CONTINUED STABILIZATION. (REQUIREMENT MAY BE REDUCED TO TWO (2) DAYS FOR SENSITIVE AREAS.)

8. PRIOR TO REMOVAL OF SEDIMENT CONTROL MEASURES, THE CONTRACTOR SHALL STABILIZE AND HAVE ESTABLISHED PERMANENT STABILIZATION FOR ALL CONTRIBUTORY DISTURBED AREAS USING SOD OR AN APPROVED PERMANENT SEED MIXTURE WITH REQUIRED SOIL AMENDMENTS AND AN APPROVED ANCHORED MULCH. WOOD FIBER MULCH MAY ONLY BE USED IN SEEDING SEASON WHERE THE SLOPE DOES NOT EXCEED 10% AND GRADING HAS BEEN DONE TO PROMOTE SHEET FLOW DRAINAGE. AREAS BROUGHT TO FINISHED GRADE DURING THE SEEDING SEASON SHALL BE PERMANENTLY STABILIZED AS SOON AS POSSIBLE, BUT NOT LATER THAN SEVEN (7) CALENDAR DAYS AFTER ESTABLISHMENT. WHEN PROPERTY IS BROUGHT TO FINISHED GRADE DURING THE MONTHS OF NOVEMBER THROUGH FEBRUARY, AND PERMANENT STABILIZATION IS FOUND TO BE IMPRACTICAL, TEMPORARY SEED AND ANCHORED STRAW MULCH SHALL BE APPLIED TO DISTURBED AREAS. THE FINAL PERMANENT STABILIZATION OF SUCH PROPERTY SHALL BE APPLIED BY MARCH 15 OR EARLIER IF GROUND AND WEATHER CONDITIONS ALLOW.

9. THE SITE'S APPROVAL LETTER, APPROVED EROSION AND SEDIMENT CONTROL PLANS, DAILY LOG BOOKS, AND TEST REPORTS SHALL BE AVAILABLE AT THE SITE FOR INSPECTION BY DULY AUTHORIZED OFFICIALS OF WMA AND THE AGENCY RESPONSIBLE FOR PROJECT.

10. SURFACE DRAINAGE FLOWS OVER UNSTABILIZED CUT AND FILL SLOPES SHALL BE CONTROLLED BY EITHER PREVENTING DRAINAGE FLOWS FROM TRAVERSING THE SLOPES OR BY INSTALLING PROTECTIVE DEVICES TO LOWER THE WATER DOWNSLOPE WITHOUT CAUSING EROSION. DIKES SHALL BE INSTALLED AND MAINTAINED AT THE TOP OF A CUT OR FILL SLOPE UNTIL THE SLOPE AND DRAINAGE AREA TO IT ARE FULLY STABILIZED, AT WHICH TIME THEY MUST BE REMOVED AND FINAL GRADING DONE TO PROMOTE SHEET FLOW DRAINAGE. PROTECTIVE METHODS MUST BE PROVIDED AT POINTS OF CONCENTRATED FLOW WHERE EROSION IS LIKELY TO OCCUR.

11. PERMANENT SWALES OR OTHER POINTS OF CONCENTRATED WATER FLOW SHALL BE STABILIZED WITH SOD OR SEED WITH AN APPROVED EROSION CONTROL MATTING, RIP-RAP, OR BY OTHER APPROVED STABILIZATION MEASURES.

12. TEMPORARY SEDIMENT CONTROL DEVICES MAY BE REMOVED, WITH PERMISSION OF WMA INSPECTOR AND AGENCY INSPECTORS, WITHIN THIRTY (30) CALENDAR DAYS FOLLOWING ESTABLISHMENT OF PERMANENT STABILIZATION IN ALL CONTRIBUTORY DRAINAGE AREAS. STORMWATER MANAGEMENT STRUCTURES USED TEMPORARILY FOR SEDIMENT CONTROL SHALL BE CONVERTED TO THE PERMANENT CONFIGURATION WITHIN THIS TIME PERIOD AS WELL.

13. NO PERMANENT CUT OR FILL SLOPE WITH A GRADIENT STEEPER THAN 3:1 WILL BE PERMITTED IN LAWN MAINTENANCE AREAS. A SLOPE GRADIENT OF UP TO 2:1 WILL BE PERMITTED IN NONMAINTENANCE AREAS PROVIDED THAT THOSE AREAS ARE INDICATED ON THE EROSION AND SEDIMENT CONTROL PLAN WITH A LOW-MAINTENANCE GROUND COVER SPECIFIED FOR PERMANENT STABILIZATION. SLOPE GRADIENT STEEPER THAN 2:1 WILL NOT BE PERMITTED WITH VEGETATIVE STABILIZATION.

14. FOR FINISHED GRADING, THE CONTRACTOR SHALL PROVIDE ADEQUATE GRADIENTS TO PREVENT WATER FROM PONDING FOR MORE THAN TWENTY FOUR (24) HOURS AFTER THE END OF A RAINFALL EVENT. DRAINAGE COURSES AND SWALE FLOW AREAS MAY TAKE AS LONG AS FORTY-EIGHT (48) HOURS AFTER THE END OF A RAINFALL EVENT TO DRAIN. AREAS DESIGNED TO HAVE STANDING WATER SHALL NOT BE REQUIRED TO MEET THIS REQUIREMENT.

15. SEDIMENT TRAPS OR BASINS ARE NOT PERMITTED WITHIN 20 FEET OF A FOUNDATION THAT EXISTS OR IS UNDER CONSTRUCTION. NO STRUCTURE MAY BE CONSTRUCTED WITHIN 20 FEET OF AN ACTIVE SEDIMENT TRAP OR BASIN.

16. THE WMA INSPECTOR HAS THE OPTION OF REQUIRING ADDITIONAL SAFETY OR SEDIMENT CONTROL MEASURES, IF DEEMED NECESSARY.

17. ALL TRAP DEPTH DIMENSIONS ARE RELATIVE TO THE OUTLET ELEVATION. ALL TRAPS MUST HAVE A STABLE OUTFALL. ALL TRAPS AND BASINS SHALL HAVE STABLE INFLOW POINTS.

18. VEGETATIVE STABILIZATION SHALL BE PERFORMED IN ACCORDANCE WITH THE STANDARDS AND SPECIFICATIONS FOR SOIL EROSION AND SEDIMENT CONTROL. REFER TO APPROPRIATE SPECIFICATIONS FOR TEMPORARY SEEDING, PERMANENT SEEDING, MULCHING, SODDING, AND GROUND COVERS.

19. SEDIMENT SHALL BE REMOVED AND THE TRAP OR BASIN RESTORED TO ITS ORIGINAL DIMENSIONS WHEN THE SEDIMENT HAS ACCUMULATED TO ONE QUARTER OF THE TOTAL DEPTH OF THE TRAP OR BASIN. TOTAL DEPTH SHALL BE MEASURED FROM THE TRAP OR BASIN BOTTOM TO THE CREST OF THE OUTLET.

20. SEDIMENT REMOVED FROM TRAPS (AND BASINS) SHALL BE PLACED AND STABILIZED IN APPROVED AREAS, BUT NOT WITHIN A FLOODPLAIN, WETLAND OR TREE-SAVE AREA. WHEN PUMPING SEDIMENT LADEN WATER, THE DISCHARGE MUST BE DIRECTED TO A SEDIMENT TRAPPING DEVICE PRIOR TO RELEASE FROM THE SITE. A SUMP PIT MAY BE USED IF SEDIMENT TRAPS THEMSELVES ARE BEING PUMPED OUT.

21. ALL WATER REMOVED FROM EXCAVATED AREAS SHALL BE PASSED THROUGH A WMA APPROVED DEWATERING PRACTICE OR PUMPED TO A SEDIMENT TRAP OR BASIN PRIOR TO DISCHARGE TO A FUNCTIONAL STORM DRAIN SYSTEM OR TO STABLE GROUND SURFACE.

22. SEDIMENT CONTROL FOR UTILITY CONSTRUCTION FOR AREAS OUTSIDE OF DESIGNED CONTROLS OR AS DIRECTED BY ENGINEER OR WMA INSPECTOR:
A. CALL UTILITIES SURVEYOR CONTRACTED BY NAVFAC PRIOR TO THE START OF WORK.
B. EXCAVATED TRENCH MATERIAL SHALL BE PLACED ON DUMP TRUCKS FOR TEMPORARY STORAGE OR DISPOSAL. NO TEMPORARY STOCK PILING OF MATERIALS WILL BE ALLOWED ON THE PROJECT SITE.
C. TRENCHES FOR UTILITY INSTALLATION SHALL BE BACKFILLED, COMPACTED, AND STABILIZED AT THE END OF EACH WORKING DAY. NO MORE TRENCH SHALL BE OPENED THAN CAN BE COMPLETED THE SAME DAY, UNLESS;
D. TEMPORARY SILT FENCE SHALL BE PLACED IMMEDIATELY DOWNSTREAM OF ANY DISTURBED AREA INTENDED TO REMAIN DISTURBED FOR MORE THAN ONE DAY.
E. AREAS SURROUNDING UTILITY TRENCH INSTALLATIONS SHALL BE SWEPT CLEAN AT THE END OF EACH WORK DAY.

23. WHERE DEEMED APPROPRIATE BY THE ENGINEER OR INSPECTOR, SEDIMENT BASINS AND TRAPS MAY NEED TO BE SURROUNDED WITH AN APPROVED SAFETY FENCE. THE FENCE MUST CONFORM TO LOCAL ORDINANCES AND REGULATIONS. THE DEVELOPER OR OWNER SHALL CHECK WITH LOCAL BUILDING OFFICIALS ON APPLICABLE SAFETY REQUIREMENTS. WHERE SAFETY FENCE IS DEEMED APPROPRIATE AND LOCAL ORDINANCES DO NOT SPECIFY FENCING SIZES AND TYPES, THE FOLLOWING SHALL BE USED AS A MINIMUM STANDARD: THE SAFETY FENCE MUST BE MADE OF WELDED WIRE AND AT LEAST 42 INCHES HIGH, HAVE POSTS SPACED NO FARTHER APART THAN 8 FEET, HAVE MESH OPENINGS NO GREATER THAN 2 INCHES IN WIDTH AND 4 INCHES IN HEIGHT WITH A MINIMUM OF 14 GAUGE WIRE. SAFETY FENCE MUST BE MAINTAINED AND IN GOOD CONDITION AT ALL TIMES.

24. OFF-SITE SPOIL OR BORROW AREAS ON STATE OR FEDERAL PROPERTY MUST HAVE PRIOR APPROVAL BY WMA AND OTHER APPLICABLE STATE, FEDERAL, AND LOCAL AGENCIES; OTHERWISE APPROVAL MUST BE GRANTED BY THE LOCAL AUTHORITIES. ALL WASTE AND BORROW AREAS OFF-SITE MUST BE PROTECTED BY SEDIMENT CONTROL MEASURES AND STABILIZED.

25. SITES WHERE INFILTRATION DEVICES ARE USED FOR THE CONTROL OF STORMWATER, EXTREME CARE MUST BE TAKEN TO PREVENT RUNOFF FROM UNSTABILIZED AREAS FROM ENTERING THE STRUCTURE DURING CONSTRUCTION. SEDIMENT CONTROL DEVICES PLACED IN INFILTRATION AREAS MUST HAVE BOTTOM ELEVATIONS AT LEAST TWO (2) FEET HIGHER THAN THE FINISH GRADE BOTTOM ELEVATION OF THE INFILTRATION PRACTICE. WHEN CONVERTING A SEDIMENT TRAP TO AN INFILTRATION DEVICE, ALL ACCUMULATED SEDIMENT MUST BE REMOVED AND DISPOSED OF PRIOR TO FINAL GRADING OF INFILTRATION DEVICE.

STANDARD EROSION AND SEDIMENT CONTROL NOTES (CONTINUED)

26. WHEN A STORM DRAIN SYSTEM OUTFALL IS DIRECTED TO A SEDIMENT TRAP OR SEDIMENT BASIN AND THE SYSTEM IS TO BE USED FOR TEMPORARILY CONVEYING SEDIMENT LADEN WATER, ALL STORM DRAIN INLETS IN NON-SUMP AREAS SHALL HAVE TEMPORARY ASPHALT BERMS CONSTRUCTED AT THE TIME OF BASE PAVING TO DIRECT GUTTER FLOW INTO THE INLETS TO AVOID SURCHARGING AND OVERFLOW OF INLETS IN SUMP AREAS.

27. SITE INFORMATION:
A. TOTAL AREA OF FACILITY 3 ACRES
(BASE, CAMPUS, PARK, ETC.)
B. AREA DISTURBED 0.11 ACRES
C. AREA TO BE ROOFED OR PAVED 0.00 ACRES
E. TOTAL FILL 0 CUBIC YARDS
F. OFF-SITE WASTE / BORROW AREA LOCATION N/A

SEQUENCE OF CONSTRUCTION.

1. PRE-CONSTRUCTION MEETING SHALL BE HELD WITH WMA PRIOR TO ANY SITE DISTURBANCE IN ACCORDANCE WITH STANDARD EROSION AND SEDIMENT CONTROL NOTE #1.

2. MARK UP THE PIER LOCATIONS AND THE SAW-CUT LINE. SAW-CUT THE PAVEMENT SECTION AND/OR DRILL PIERS AS PER DIRECTION OF SITE SUPERVISOR. NO DISTURBED AREA SHALL BE LEFT UNSTABILIZED OVERNIGHT UNLESS THE AREA IS DIRECTED TO AN MDE APPROVED SEDIMENT CONTROL DEVICE. THE TEMPORARY BUILDING WILL BE PLACED ON THE PIERS WITH NO ADDITIONAL EARTH DISTURBANCE.

3. CONCURRENTLY WITH STEP 2, EXCAVATE THE UTILITY TRENCHES, INSTALL THE UTILITIES AND BACKFILL THE UTILITY TRENCH. NO DISTURBED AREA SHALL BE LEFT UNSTABILIZED OVERNIGHT UNLESS THE AREA IS DIRECTED TO AN MDE APPROVED SEDIMENT CONTROL DEVICE. ALL OF THE EXCAVATED TRENCH MATERIAL IS TO BE PLACED DIRECTLY INTO ONSITE DUMP TRUCKS FOR REUSE OR DISPOSAL. NO STOCKPILING OF EXCAVATED MATERIALS WILL BE ALLOWED. ANY REMAINING MATERIAL SHALL BE DISPOSED OFF SITE AS DIRECTED BY THE SITE SUPERVISOR AT A SITE WITH AN APPROVED GRADING PERMIT. INSTALL PAVEMENT SECTION TO MEET THE ORIGINAL GRADES.

4. AFTER THE SITE IS PERMANENTLY STABILIZED AND WITH PERMISSION FROM MDE/WMA, REMOVE REMAINING EROSION CONTROL AND SEDIMENT CONTROL MEASURES AND PROVIDE PERMANENT STABILIZATION FOR ANY DISTURBANCE ASSOCIATED WITH THE REMOVAL.

STANDARD STABILIZATION NOTE:

1. FOLLOWING INITIAL SOIL DISTURBANCE OR RE-DISTURBANCE, PERMANENT OR TEMPORARY STABILIZATION MUST BE COMPLETED WITHIN:

A.) THREE (3) CALENDAR DAYS AS TO THE SURFACE OF ALL PERIMETER DIKES, SWALES, DITCHES, PERIMETER SLOPES, AND ALL SLOPES STEEPER THAN 3 HORIZONTAL TO 1 VERTICAL (3:1); AND

B.) SEVEN (7) CALENDAR DAYS AS TO ALL OTHER DISTURBED OR GRADED AREAS ON THE PROJECT SITE NOT UNDER ACTIVE GRADING.

SYM	DESCRIPTION	DATE
	FINAL CORRECTED SET	3/26/14
	100% FINAL DESIGN SUBMISSION	2/3/14
	65% VE SUBMISSION	11/25/13
	65% SUBMITTAL	4/26/13
	35% SUBMITTAL	3/8/13
	20% SUBMITTAL	1/18/13

NAVFAC

STATE OF MARYLAND
MICHAEL W. PUGH
No. 42509
PROFESSIONAL ENGINEER
3/24/14

HDR
ARCHITECTURE | ENGINEERING & CONSULTING
1101 KING STREET
SUITE 400
ALEXANDRIA, VIRGINIA 22314
703-518-8500

APPROVED
FOR COMMANDER NAVFAC
ACTIVITY
SATISFACTORY TO DATE

DES MMM DRW NI CHK MWP
PM/DM CHEMENJU/HILL
BRANCH MANAGER N/A
CHIEF ENG/ARCH TOM COX

DEPARTMENT OF THE NAVY
NAVAL FACILITIES ENGINEERING COMMAND
COMPONENT NAME
NSA/Bethesda

NAVAL FACILITIES ENGINEERING COMMAND ~ NAVFAC WASHINGTON
NSA - BETHESDA, MD

BETHESDA, MD

P125 - TEMPORARY MEDICAL FACILITIES
PACKAGE 2 - CLINIC BUILDING

CIVIL - SOIL EROSION AND SEDIMENT CONTROL NOTES

SCALE: NOT TO SCALE
EPROJECT NO.: 1151333
CONSTR. CONTR. NO. N62470-09-D-9044
NAVFAC DRAWING NO. 13065758
SHEET 0 OF 0

C-506

B-4 STANDARDS AND SPECIFICATIONS

FOR

VEGETATIVE STABILIZATION

Definition

Using vegetation as cover to protect exposed soil from erosion.

Purpose

To promote the establishment of vegetation on exposed soil.

Conditions Where Practice Applies

On all disturbed areas not stabilized by other methods. This specification is divided into sections on incremental stabilization; soil preparation, soil amendments and topsoiling; seeding and mulching; temporary stabilization; and permanent stabilization.

Effects on Water Quality and Quantity

Stabilization practices are used to promote the establishment of vegetation on exposed soil. When soil is stabilized with vegetation, the soil is less likely to erode and more likely to allow infiltration of rainfall, thereby reducing sediment loads and runoff to downstream areas.

Planting vegetation in disturbed areas will have an effect on the water budget, especially on volumes and rates of runoff, infiltration, evaporation, transpiration, percolation, and groundwater recharge. Over time, vegetation will increase organic matter content and improve the water holding capacity of the soil and subsequent plant growth.

Vegetation will help reduce the movement of sediment, nutrients, and other chemicals carried by runoff to receiving waters. Plants will also help protect groundwater supplies by assimilating those substances present within the root zone.

Sediment control practices must remain in place during grading, seedbed preparation, seeding, mulching, and vegetative establishment.

Adequate Vegetative Establishment

Inspect seeded areas for vegetative establishment and make necessary repairs, replacements, and reseedings within the planting season.

1. Adequate vegetative stabilization requires 95 percent groundcover.
2. If an area has less than 40 percent groundcover, restabilize following the original recommendations for lime, fertilizer, seedbed preparation, and seeding.
3. If an area has between 40 and 94 percent groundcover, over-seed and fertilize using half of the rates originally specified.
4. Maintenance fertilizer rates for permanent seeding are shown in Table B.6.

B-4-1 STANDARDS AND SPECIFICATIONS

FOR

INCREMENTAL STABILIZATION

Definition

Establishment of vegetative cover on cut and fill slopes.

Purpose

To provide timely vegetative cover on cut and fill slopes as work progresses.

Conditions Where Practice Applies

Any cut or fill slope greater than 15 feet in height. This practice also applies to stockpiles.

Criteria

A. Incremental Stabilization - Cut Slopes

1. Excavate and stabilize cut slopes in increments not to exceed 15 feet in height. Prepare seedbed and apply seed and mulch on all cut slopes as the work progresses.
2. Construction sequence example (Refer to Figure B.1):
   a. Construct and stabilize all temporary swales or dikes that will be used to convey runoff around the excavation.
   b. Perform Phase 1 excavation, prepare seedbed, and stabilize.
   c. Perform Phase 2 excavation, prepare seedbed, and stabilize. Overseed Phase 1 areas as necessary.
   d. Perform final phase excavation, prepare seedbed, and stabilize. Overseed previously seeded areas as necessary.

Note: Once excavation has begun the operation should be continuous from grubbing through the completion of grading and placement of topsoil (if required) and permanent seed and mulch. Any interruptions in the operation or completing the operation out of the seeding season will necessitate the application of temporary stabilization.

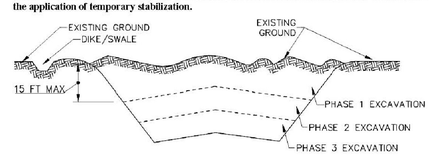

Figure B.1: Incremental Stabilization – Cut

B. Incremental Stabilization - Fill Slopes

1. Construct and stabilize fill slopes in increments not to exceed 15 feet in height. Prepare seedbed and apply seed and mulch on all slopes as the work progresses.
2. Stabilize slopes immediately when the vertical height of a lift reaches 15 feet, or when the grading operation ceases as prescribed in the plans.
3. At the end of each day, install temporary water conveyance practice(s), as necessary, to intercept surface runoff and convey it down the slope in a non-erosive manner.
4. Construction sequence example (Refer to Figure B.2):
   a. Construct and stabilize all temporary swales or dikes that will be used to divert runoff around the fill. Construct silt fence on low side of fill unless other methods shown on the plans address this area.
   b. At the end of each day, install temporary water conveyance practice(s), as necessary, to intercept surface runoff and convey it down the slope in a non-erosive manner.
   c. Place Phase 1 fill, prepare seedbed, and stabilize.
   d. Place Phase 2 fill, prepare seedbed, and stabilize.
   e. Place final phase fill, prepare seedbed, and stabilize. Overseed previously seeded areas as necessary.

Note: Once the placement of fill has begun the operation should be continuous from grubbing through the completion of grading and placement of topsoil (if required) and permanent seed and mulch. Any interruptions in the operation or completing the operation out of the seeding season will necessitate the application of temporary stabilization.

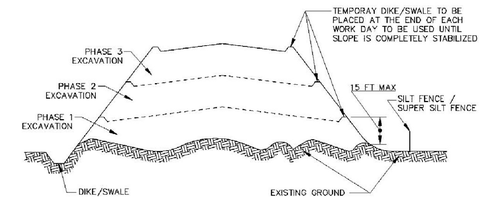

Figure B.2: Incremental Stabilization – Fill

B-4-2 STANDARDS AND SPECIFICATIONS

FOR

SOIL PREPARATION, TOPSOILING, AND SOIL AMENDMENTS

Definition

The process of preparing the soils to sustain adequate vegetative stabilization.

Purpose

To provide a suitable soil medium for vegetative growth.

Conditions Where Practice Applies

Where vegetative stabilization is to be established.

Criteria

A. Soil Preparation

1. Temporary Stabilization
   a. Seedbed preparation consists of loosening soil to a depth of 3 to 5 inches by means of suitable agricultural or construction equipment, such as disc harrows or chisel plows or rippers mounted on construction equipment. After the soil is loosened, it must not be rolled or dragged smooth but left in the roughened condition. Slopes 3:1 or flatter are to be tracked with ridges running parallel to the contour of the slope.
   b. Apply fertilizer and lime as prescribed on the plans.
   c. Incorporate lime and fertilizer into the top 3 to 5 inches of soil by disking or other suitable means.
2. Permanent Stabilization
   a. A soil test is required for any earth disturbance of 5 acres or more. The minimum soil conditions required for permanent vegetative establishment are:
      i. Soil pH between 6.0 and 7.0.
      ii. Soluble salts less than 500 parts per million (ppm).
      iii. Soil contains less than 40 percent clay but enough fine grained material (greater than 30 percent silt plus clay) to provide the capacity to hold a moderate amount of moisture. An exception: if lovegrass will be planted, then a sandy soil (less than 30 percent silt plus clay) would be acceptable.
      iv. Soil contains 1.5 percent minimum organic matter by weight.
      v. Soil contains sufficient pore space to permit adequate root penetration.
   b. Application of amendments or topsoil is required if on-site soils do not meet the above conditions.
   c. Graded areas must be maintained in a true and even grade as specified on the approved plan, then scarified or otherwise loosened to a depth of 3 to 5 inches.

   d. Apply soil amendments as specified on the approved plan or as indicated by the results of a soil test.
   e. Mix soil amendments into the top 3 to 5 inches of soil by disking or other suitable means. Rake lawn areas to smooth the surface, remove large objects like stones and branches, and ready the area for seed application. Loosen surface soil by dragging with a heavy chain or other equipment to roughen the surface where site conditions will not permit normal seedbed preparation. Track slopes 3:1 or flatter with tracked equipment leaving the soil in an irregular condition with ridges running parallel to the contour of the slope. Leave the top 1 to 3 inches of soil loose and friable. Seedbed loosening may be unnecessary on newly disturbed areas.

B. Topsoiling

1. Topsoil is placed over prepared subsoil prior to establishment of permanent vegetation. The purpose is to provide a suitable soil medium for vegetative growth. Soils of concern have low moisture content, low nutrient levels, low pH, materials toxic to plants, and/or unacceptable soil gradation.
2. Topsoil salvaged from an existing site may be used provided it meets the standards as set forth in these specifications. Typically, the depth of topsoil to be salvaged for a given soil type can be found in the representative soil profile section in the Soil Survey published by USDA-NRCS.
3. Topsoiling is limited to areas having 2:1 or flatter slopes where:
   a. The texture of the exposed subsoil/parent material is not adequate to produce vegetative growth.
   b. The soil material is so shallow that the rooting zone is not deep enough to support plants or furnish continuing supplies of moisture and plant nutrients.
   c. The original soil to be vegetated contains material toxic to plant growth.
   d. The soil is so acidic that treatment with limestone is not feasible.
4. Areas having slopes steeper than 2:1 require special consideration and design.
5. Topsoil Specifications: Soil to be used as topsoil must meet the following criteria:
   a. Topsoil must be a loam, sandy loam, clay loam, silt loam, sandy clay loam, or loamy sand. Other soils may be used if recommended by an agronomist or soil scientist and approved by the appropriate approval authority. Topsoil must not be a mixture of contrasting textured subsoils and must contain less than 5 percent by volume of cinders, stones, slag, coarse fragments, gravel, sticks, roots, trash, or other materials larger than 1½ inches in diameter.
   b. Topsoil must be free of noxious plants or plant parts such as Bermuda grass, quack grass, Johnson grass, nut sedge, poison ivy, thistle, or others as specified.
   c. Topsoil substitutes or amendments, as recommended by a qualified agronomist or soil scientist and approved by the appropriate approval authority, may be used in lieu of natural topsoil.
6. Topsoil Application
   a. Erosion and sediment control practices must be maintained when applying topsoil.
   b. Uniformly distribute topsoil in a 5 to 8 inch layer and lightly compact to a minimum thickness of 4 inches. Spreading is to be performed in such a manner that sodding or seeding can proceed with a minimum of additional soil preparation and tillage. Any irregularities in the surface resulting from topsoiling or other operations must be corrected in order to prevent the formation of depressions or water pockets.
   c. Topsoil must not be placed if the topsoil or subsoil is in a frozen or muddy condition, when the subsoil is excessively wet or in a condition that may otherwise be detrimental to proper grading

and seedbed preparation.

C. Soil Amendments (Fertilizer and Lime Specifications)

1. Soil tests must be performed to determine the exact ratios and application rates for both lime and fertilizer on sites having disturbed areas of 5 acres or more. Soil analysis may be performed by a recognized private or commercial laboratory. Soil samples taken for engineering purposes may also be used for chemical analyses.
2. Fertilizers must be uniform in composition, free flowing and suitable for accurate application by appropriate equipment. Manure may be substituted for fertilizer with prior approval from the appropriate approval authority. Fertilizers must all be delivered to the site fully labeled according to the applicable laws and must bear the name, trade name or trademark and warranty of the producer.
3. Lime materials must be ground limestone (hydrated or burnt lime may be substituted except when hydroseeding) which contains at least 50 percent total oxides (calcium oxide plus magnesium oxide). Limestone must be ground to such fineness that at least 50 percent will pass through a #100 mesh sieve and 98 to 100 percent will pass through a #20 mesh sieve.
4. Lime and fertilizer are to be evenly distributed and incorporated into the top 3 to 5 inches of soil by disking or other suitable means.
5. Where the subsoil is either highly acidic or composed of heavy clays, spread ground limestone at the rate of 4 to 8 tons/acre (200-400 pounds per 1,000 square feet) prior to the placement of topsoil.

SYM	DESCRIPTION	DATE
	FINAL CORRECTED SET	3/26/14
	100% FINAL DESIGN SUBMISSION	2/3/14
	65% VE SUBMISSION	11/25/13
	65% SUBMITTAL	4/26/13
	35% SUBMITTAL	3/8/13
	20% SUBMITTAL	1/18/13

NAVFAC

STATE OF MARYLAND MICHAEL W. PUGH No. 42509 PROFESSIONAL ENGINEER 3/24/14

HDR
ARCHITECTURE | ENGINEERING & CONSULTING
1101 KING STREET
SUITE 400
ALEXANDRIA, VIRGINIA 22314
703-518-8500

APPROVED
FOR COMMANDER NAVFAC
ACTIVITY
SATISFACTORY TO DATE
DES MMM DRW NI CHK MWP
PM/DM CHEMENJU/HILL
BRANCH MANAGER N/A
CHIEF ENG/ARCH TOM COX

DEPARTMENT OF THE NAVY
NAVAL FACILITIES ENGINEERING COMMAND
COMPONENT NAME NSA/Bethesda
NAVAL FACILITIES ENGINEERING COMMAND ~ NAVFAC WASHINGTON
NSA - BETHESDA, MD
BETHESDA, MD
P125 - TEMPORARY MEDICAL FACILITIES
PACKAGE 2 - CLINIC BUILDING
CIVIL - VEGETATIVE SPECIFICATIONS

SCALE: NOT TO SCALE
EPROJECT NO.: 1151333
CONSTR. CONTR. NO. N62470-09-D-9044
NAVFAC DRAWING NO. 13065760
SHEET OF 0
C-507