DOOR AND FRAME SCHEDULE 601

IDENTIFICATION			PANEL							FRAME							HARDWARE		
			DIMENSIONS										FRAME DETAIL						
			WIDTH																
ROOM NO.	ROOM NAME	DOOR NO.	W1	W2	TOTAL WIDTH	H	TYPE	MATERIAL	FINISH	TYPE	MATERIAL	FINISH	HEAD	JAMB	SILL	FIRE RATING	GROUP	ELECTRICAL	NOTES
1A00	CHAPEL	1A00A	3' - 6"			7' - 0"	F	WD	STN	1	HM	P	A1	A2	-		HW-26		
1A00	CHAPEL	1A00B	3' - 6"			7' - 0"	F	WD	STN	1	HM	P	A1	A2	-		HW-26		
1A00	CHAPEL	1A00C	3' - 0"			7' - 0"	F	WD	STN	1	HM	P	A1	A2			HW-04		
1A01	WAITING AREA, CHAIRS ONLY	1A01	4' - 0"			7' - 0"	F	WD	STN	1	HM	P	A1	A2	-		CA-02		2
1A02	RECEPTION / CONTROL OUTPATIENT	1A02	3' - 0"			7' - 0"	F	WD	STN	1	HM	P	A1	A2	-		HW-07		
1A02A	APPOINTMENT CLERK CUBICLE	1A02A	3' - 0"			7' - 0"	F	WD	STN	1	HM	P	A1	A2	-		HW-07		
1A06	EXAM ROOM	1A06	4' - 0"			7' - 0"	F	WD	STN	1	HM	P	A1	A2	-		HW-09		
1A07	EXAM ROOM	1A07	4' - 0"			7' - 0"	F	WD	STN	1	HM	P	A1	A2	-		HW-09		
1A08	CLEAN UTILITY	1A08	3' - 0"			7' - 0"	F	WD	STN	1	HM	P	A1	A2	-		HW-04		
1A10	EXAM ROOM	1A10	4' - 0"			7' - 0"	F	WD	STN	1	HM	P	A1	A2	-		HW-09		
1A11	EXAM ROOM	1A11	4' - 0"			7' - 0"	F	WD	STN	1	HM	P	A1	A2	-		HW-09		
1A12	EXAM ROOM	1A12	4' - 0"			7' - 0"	F	WD	STN	1	HM	P	A1	A2	-		HW-09		
1A13	EXAM ROOM	1A13	4' - 0"			7' - 0"	F	WD	STN	1	HM	P	A1	A2	-		HW-09		
1A14	EXAM ROOM	1A14	4' - 0"			7' - 0"	F	WD	STN	1	HM	P	A1	A2	-		HW-09		
1A15	EXAM ROOM	1A15	4' - 0"			7' - 0"	F	WD	STN	1	HM	P	A1	A2	-		HW-09		
1A16	LCPO/LPO OFFICE, SYSTEM FURNITURE	1A16	3' - 0"			7' - 0"	F	WD	STN	1	HM	P	A1	A2	-		HW-01		
1A17	SHARED OFFICE	1A17	3' - 0"			7' - 0"	F	WD	STN	1	HM	P	A1	A2	-		HW-07		
1A18	OFFICE, NURSE MANAGER, SYSTEM FURNITURE	1A18	3' - 0"			7' - 0"	F	WD	STN	1	HM	P	A1	A2	-		HW-01		
1A20	ADVICE NURSE OFFICE, SYSTEM FURNITURE	1A20	3' - 0"			7' - 0"	F	WD	STN	1	HM	P	A1	A2	-		HW-01		
1A21	SOILED UTILITY	1A21	3' - 0"			7' - 0"	F	WD	STN	1	HM	P	A1	A2	-		HW-04		
1A22	PROVIDER OFFICE	1A22	3' - 0"			7' - 0"	F	WD	STN	1	HM	P	A1	A2	-		HW-01		
1A23	EQUIPMENT STORAGE	1A23	3' - 0"			7' - 0"	F	WD	STN	1	HM	P	A1	A2	-		HW-04		
1A24	PROVIDER OFFICE	1A24	3' - 0"			7' - 0"	F	WD	STN	1	HM	P	A1	A2	-		HW-01		
1A26	EXAM ROOM	1A26	4' - 0"			7' - 0"	F	WD	STN	1	HM	P	A1	A2	-		HW-09		
1A28	EXAM ROOM	1A28	4' - 0"			7' - 0"	F	WD	STN	1	HM	P	A1	A2	-		HW-09		
1A30	PROVIDER OFFICE	1A30	3' - 0"			7' - 0"	F	WD	STN	1	HM	P	A1	A2	-		HW-01		
1A32	SHARED OFFICE	1A32	3' - 0"			7' - 0"	F	WD	STN	1	HM	P	A1	A2	-		HW-07		
1A33	CONFERENCE ROOM/ LOUNGE	1A33	4' - 0"			7' - 0"	F	WD	STN	1	HM	P	A1	A2	-		HW-07		
1A35	PATIENT TOILET	1A35	3' - 0"			7' - 0"	F	WD	STN	1	HM	P	A1	A2	-		HW-05		
1A37	PATIENT TOILET	1A37	3' - 0"			7' - 0"	F	WD	STN	1	HM	P	A1	A2	-		HW-05		
1A38A	MEDICATION ROOM	1A38A	3' - 0"			7' - 0"	F	WD	STN	1	HM	P	A1	A2			CA-02		2
1A43	PROCEDURE ROOM TOILET	1A43	3' - 0"			7' - 0"	F	WD	STN	1	HM	P	A1	A2			HW-05		
1A44	JANITORS' CLOSET	1A44	3' - 0"			7' - 0"	F	WD	STN	1	HM	P	A1	A2	-		HW-07		
1A45	SACRISTY STORAGE	1A45	3' - 0"			7' - 0"	F	WD	STN	1	HM	P	A1	A2			HW-04		
1A46	ELECTRICAL ROOM, BUILDING COMMON	1A46	3' - 0"			7' - 0"	F	WD	STN	1	HM	P	A1	A2	-		HW-04A		
1A47	CENTRAL LOCKER ROOM - CHANGING AREA	1A47	3' - 0"			7' - 0"	F	WD	STN	1	HM	P	A1	A2	-		HW-13		
1A48	CENTRAL LOCKER ROOM - CHANGING AREA	1A48	3' - 0"			7' - 0"	F	WD	STN	1	HM	P	A1	A2	-		HW-13		
1A50	EQUIPMENT STORAGE	1A50	3' - 0"	1' - 6"	4' - 6"	7' - 0"	N/F	WD	STN	1	HM	P	A1	A2	-		CA-10		2, 3
1A50A	STORAGE ROOM, SHELVING	1A50A	3' - 0"			7' - 0"	F	WD	STN	1	HM	P	A1	A2	-		HW-04		
1A50B	EQUIPMENT STORAGE	1A50B	3' - 0"	1' - 6"	4' - 6"	7' - 0"	N/F	WD	STN	1	HM	P	A1	A2	-		HW-40		3
1A52	STORAGE ROOM, EQUIPMENT/ SHELVING	1A52	3' - 0"	1' - 6"	4' - 6"	7' - 0"	F/F	WD	STN	1	HM	P	A1	A2	-		HW-40		3
1A54	EQUIPMENT HOLDING	1A54	3' - 6"			7' - 0"	F	WD	STN	1	HM	P	A1	A2	-		HW-04		
1A56	COMMUNICATIONS ROOM	1A56	3' - 0"			7' - 0"	F	WD	STN	1	HM	P	A1	A2	-		CA-02		2
1A58	PLUMBING ROOM, BUILDING COMMON	1A58	3' - 0"			7' - 0"	F	WD	STN	1	HM	P	A1	A2	-		HW-04		
1A99A	VESTIBULE, BUILDING COMMON	1A99AA	3' - 0"	3' - 0"	6' - 0"	6' - 10"	AW	ALUM	P	12	ALUM	P	B5/A-612	C2/A-612	A4/1-612		AU-20	Y	1
1A99A	VESTIBULE, BUILDING COMMON	1A99AB	3' - 0"	3' - 0"	6' - 0"	6' - 10"	AW	ALUM	P	12	ALUM	P	A1	A2	-		CA-08		
1A99D	CORRIDOR, BUILDING COMMON	1A99D	4' - 0"			7' - 0"	F	WD	STN	11	HM	P	A1	A2	-	90	HW-10A		
1A99G	CORRIDOR, BUILDING COMMON	1A99G	3' - 0"	1' - 6"	4' - 6"	7' - 0"	N/F	WD	STN	1	HM	P	A1	A2	-		HW-43A		3
1A99J	CORRIDOR, BUILDING COMMON	1A99J	3' - 0"			7' - 0"	F	WD	STN	1	HM	P	A1	A2	-		CA-02		2
1A99K	CORRIDOR, BUILDING COMMON	1A99K	3' - 0"			7' - 0"	F	WD	STN	1	HM	P	A1	A2	-		CA-02		2
1A99L	CORRIDOR, BUILDING COMMON	1A99L	3' - 0"			7' - 0"	F	WD	STN	1	HM	P	A1	A2	-		HW-10		
1A99M	VESTIBULE, BUILDING COMMON	1A99MA	3' - 0"	3' - 0"	6' - 0"	6' - 10"	N/N	HM	P	11	HM	P	B1/A-611	B2/A-611	A4/A-612		AU-20		
1A99M	VESTIBULE, BUILDING COMMON	1A99MB	3' - 0"	3' - 0"	6' - 0"	6' - 10"	N/N	HM	P	11	HM	P	A1	A2	-		CA-08		
1B01	FEMALE TOILET, MULTIPLE	1B01	3' - 0"			7' - 0"	F	WD	STN	1	HM	P	A1	A2	-		HW-13		
1B03	MALE TOILET, MULTIPLE	1B03	3' - 0"			7' - 0"	F	WD	STN	1	HM	P	A1	A2	-		HW-13		
1B04	RECEPTION	1B04	3' - 0"			7' - 0"	F	WD	STN	1	HM	P	A1	A2	-		HW-07		
1B06	JANITORS' CLOSET	1B06	3' - 0"			7' - 0"	F	WD	STN	1	HM	P	A1	A2	-		HW-04		
1B07	ELEVATOR MACHINE ROOM, BUILDING COMMON	1B07	3' - 0"			7' - 0"	F	WD	STN	1	HM	P	A1	A2	-		HW-04		
1B08	CONFERENCE ROOM, SMALL	1B08A	3' - 0"			7' - 0"	F	WD	STN	1	HM	P	A1	A2	-		HW-09		
1B08	CONFERENCE ROOM, SMALL	1B08B	3' - 0"			7' - 0"	F	WD	STN	1	HM	P	A1	A2	-		CA-02		2
1B10	CONSULT ROOM	1B10	3' - 0"			7' - 0"	F	WD	STN	1	HM	P	A1	A2	-		HW-01		
1B11	ADMINISTRATIVE OFFICE, STANDARD FURNITURE	1B11	3' - 0"			7' - 0"	F	WD	STN	1	HM	P	A1	A2	-		HW-01		
1B13	ADMINISTRATIVE OFFICE, STANDARD FURNITURE	1B13	3' - 0"			7' - 0"	F	WD	STN	1	HM	P	A1	A2	-		HW-01		
1B14	ADMINISTRATIVE OFFICE, STANDARD FURNITURE	1B14	3' - 0"			7' - 0"	F	WD	STN	1	HM	P	A1	A2	-		HW-01		
1B15	PROVIDER OFFICE, ARMY	1B15	3' - 0"			7' - 0"	F	WD	STN	1	HM	P	A1	A2	-		HW-01		
1B16	PROVIDER OFFICE, ARMY	1B16	3' - 0"			7' - 0"	F	WD	STN	1	HM	P	A1	A2	-		HW-01		
1B17	PROVIDER OFFICE, ARMY	1B17	3' - 0"			7' - 0"	F	WD	STN	1	HM	P	A1	A2	-		HW-01		
1B18	NCOIC/ LPO OFFICE	1B18	3' - 0"			7' - 0"	F	WD	STN	1	HM	P	A1	A2	-		HW-01		
1B20	COUNSELING ROOM	1B20	3' - 0"			7' - 0"	F	WD	STN	1	HM	P	A1	A2	-		HW-01		
1B21	ELECTRICAL ROOM, BUILDING COMMON	1B21	3' - 0"			7' - 0"	F	WD	STN	1	HM	P	A1	A2	-		HW-04A		
1B22	VISUAL SCREENING	1B22	3' - 0"			7' - 0"	F	WD	STN	1	HM	P	A1	A2	-		HW-09		
1B23	VISUAL SCREENING	1B23	3' - 0"			7' - 0"	F	WD	STN	1	HM	P	A1	A2	-		HW-09		
1B24	VISUAL SCREENING	1B24	3' - 0"			7' - 0"	F	WD	STN	1	HM	P	A1	A2	-		HW-09		
1B25	VISUAL FIELD	1B25	3' - 0"			7' - 0"	F	WD	STN	1	HM	P	A1	A2	-		HW-09		
1B26	VISUAL FIELD	1B26	3' - 0"			7' - 0"	F	WD	STN	1	HM	P	A1	A2	-		HW-09		
1B27	EYE LANE, FOLDED ELECTRONIC	1B27	3' - 0"			7' - 0"	F	WD	STN	1	HM	P	A1	A2	-		HW-09		
1B29	EYE LANE, FOLDED ELECTRONIC	1B29	3' - 0"			7' - 0"	F	WD	STN	1	HM	P	A1	A2	-		HW-09		
1B30	MALE TOILET, MULTIPLE	1B30	3' - 0"			7' - 0"	F	WD	STN	1	HM	P	A1	A2	-		HW-05		
1B31	EYE LANE, FOLDED ELECTRONIC	1B31	3' - 0"			7' - 0"	F	WD	STN	1	HM	P	A1	A2	-		HW-09		
1B32	CONTACT LENS FITTING AND DISPENSING AREA	1B32	3' - 0"			7' - 0"	F	WD	STN	1	HM	P	A1	A2	-		HW-07		
1B32A	EQUIPMENT STORAGE	1B32A	3' - 6"			7' - 0"	F	WD	STN	1	HM	P	A1	A2	-		HW-04		
1B38	OPT/ TECH WORK AREA	1B38	3' - 0"			7' - 0"	F	WD	STN	1	HM	P	A1	A2	-		HW-07		
1B39	FUNDUS CAMERA ROOM	1B39	3' - 0"			7' - 0"	F	WD	STN	1	HM	P	A1	A2	-		HW-09		
1B40	EYE LANE, FOLDED ELECTRONIC	1B40	3' - 0"			7' - 0"	F	WD	STN	1	HM	P	A1	A2	-		HW-09		
1B41	EYE LANE, FOLDED ELECTRONIC	1B41	3' - 0"			7' - 0"	F	WD	STN	1	HM	P	A1	A2	-		HW-09		
1B42	EYE LANE, FOLDED ELECTRONIC	1B42	3' - 0"			7' - 0"	F	WD	STN	1	HM	P	A1	A2	-		HW-09		
1B43	EYE LANE, FOLDED ELECTRONIC	1B43	3' - 0"			7' - 0"	F	WD	STN	1	HM	P	A1	A2	-		HW-09		
1B44	EYE LANE, FOLDED ELECTRONIC	1B44	3' - 0"			7' - 0"	F	WD	STN	1	HM	P	A1	A2	-		HW-09		
1B45	CLINIC WAITING	1B45	3' - 0"			7' - 0"	F	WD	STN	11	HM	P	A1	A2	-	90	HW-10A		
1B46	EYE LANE, FOLDED ELECTRONIC	1B46	3' - 0"			7' - 0"	F	WD	STN	1	HM	P	A1	A2	-		HW-09		
1B47	EYE LANE, FOLDED ELECTRONIC	1B47	3' - 0"			7' - 0"	F	WD	STN	1	HM	P	A1	A2	-		HW-09		
1B48	EYE LANE, FOLDED ELECTRONIC	1B48	3' - 0"			7' - 0"	F	WD	STN	1	HM	P	A1	A2	-		HW-09		
1B49	EYE LANE, FOLDED ELECTRONIC	1B49	3' - 0"			7' - 0"	F	WD	STN	1	HM	P	A1	A2	-		HW-09		
1B50	MALE TOILET, MULTIPLE	1B50	3' - 0"			7' - 0"	F	WD	STN	1	HM	P	A1	A2	-		HW-05		
1B99J	CORRIDOR, BUILDING COMMON	1B50A	3' - 0"	3' - 0"	6' - 0"	7' - 0"	F/F	WD	STN	1	HM	P	A1	A2	-		HW-40		
1B51	EYEGLASS FITTING & DISPENSING	1B51	3' - 0"			7' - 0"	F	WD	STN	1	HM	P	A1	A2	-		HW-09		
1B52	EYE, OPTICAL FABRICATION - PH	1B52	3' - 0"			7' - 0"	F	WD	STN	1	HM	P	A1	A2	-		HW-08		2

GENERAL NOTES

1. SEE FLOOR PLANS FOR DOOR SYMBOL REFERENCES.

2. REFER TO SHEET A-611 FOR DOOR FRAME DETAILS.

3. DOOR OPENING LOCATIONS:

A. IMMEDIATELY ADJACENT TO A FLANKING WALL (6" TYP INCLUDING DOOR FRAME) U.N.O.
B. AT THE CENTERLINE OF ROOM, U.N.O.
C. DOOR OPENINGS IN OTHER LOCATIONS ARE LOCATED BY DIMENSIONS.

4. SEE SPECIFICATIONS FOR HARDWARE SCHEDULE.

5. ALL DOOR/ WINDOW FRAMES ARE WELDED FRAMES, U.N.O.

6. GLASS:
A. INTERIOR DOOR/ WINDOW:
1. CLEAR FLOAT GLASS (GL-1)
B. EXTERIOR DOOR/ WINDOW:
1. LOW E, CLEAR, INSULATING GLASS (GL-2)
2. SAFETY GLAZING AT ALL FULL GLASS DOORS AND SIDELIGHTS (GL-3).

7. ALL EXTERIOR DOORS SHALL HAVE METAL THRESHOLDS, SEE HARDWARE SCHEDULE.

8. SEE SPECIFICATIONS FOR VISION PANELS.

9. ALL SOLID CORE WOOD DOORS TO BE STAIN GRADE, U.N.O.

10. REFER TO SPEC SECTION 09 06 00 COLOR SCHEDULE FOR HOLLOW METAL DOOR AND FRAME PAINT COLOR.

SCHEDULE NOTES

1. AUTOMATIC SWINGING LOW ENERGY DOOR
2. CIPHER LOCK (INSTALLED ON DOOR. lOCATION OF SUMBOL ON FLOOR PLAN INDICATES THE SIDE OF THE DOOR ON WHICH THE LOCK IS INSTALLED.
3. UNEVEN PAIR DOOR
4. 180 DEGREE SWING
5. REMOTE RELEASE
6. KEYPAD

ABBREVIATIONS

ALUM	ALUMINUM
ANOD	ANODIZED
GT	GLASS TYPE
HM	HOLLOW METAL
PNT	PAINT
RM	ROOM
STN	STAIN
WD	WOOD

SYM	DESCRIPTION	DATE
	FINAL CORRECTED SET	03/26/14
	100% FINAL DESIGN SUBMISSION	02/14/14
	65% VE SUBMISSION	11/25/13
	65% SUBMISSION	04/26/13

NAVFAC

COMMONWEALTH OF VIRGINIA
PAUL G. HEFLIN
012267
3/26/2014
ARCHITECT

HDR
ARCHITECTURE | ENGINEERING & CONSULTING
1101 KING STREET
SUITE 400
ALEXANDRIA, VIRGINIA 22314
703-518-8500

APPROVED
FOR COMMANDER NAVFAC
ACTIVITY
SATISFACTORY TO DATE

DES SW | DRW GW | CHK HE
PM/DM CHEMENJU/HILL
BRANCH MANAGER N/A
CHIEF ENG/ARCH TOM COX

DEPARTMENT OF THE NAVY
NAVAL FACILITIES ENGINEERING COMMAND
NAVAL FACILITIES ENGINEERING COMMAND ~ NAVFAC WASHINGTON
ATLANTIC
Walter Reed National Military Medical Center - Bethesday, Maryland
NSA/Bethesda BETHESDA, MD
P125 - TEMPORARY MEDICAL FACILITIES
PACKAGE 2 - CLINIC BUILDING
ARCHITECTURAL - DOOR SCHEDULE

SCALE: 12" = 1'-0"
EPROJECT NO.: 1151333
CONSTR. CONTR. NO. N62470-09-D-9044
NAVFAC DRAWING NO. 13065847
SHEET OF 0
A-601

C:\rvt\191274-A-F2-CENTRAL_gowhite.rvt 3/19/2014 3:29:58 PM

DOOR AND FRAME SCHEDULE 602

IDENTIFICATION			PANEL							FRAME							HARDWARE		
			DIMENSIONS										FRAME DETAIL						
			WIDTH																
ROOM NO.	ROOM NAME	DOOR NO.	W1	W2	TOTAL WIDTH	H	TYPE	MATERIAL	FINISH	TYPE	MATERIAL	FINISH	HEAD	JAMB	SILL	FIRE RATING	GROUP	ELECTRICAL	NOTES
1B79	COUNSELING ROOM	1B79	3' - 0"			7' - 0"	F	WD	STN	1	HM	P	A1	A2	-		HW-01		
1B80	ADMINSTRATIVE OFFICE, SYSTEM FURNITURE	1B80	3' - 0"			7' - 0"	F	WD	STN	1	HM	P	A1	A2	-		HW-01		
1B99A	CORRIDOR, BUILDING COMMON	1B99A	3' - 0"			7' - 0"	F	WD	STN	1	HM	P	A1	A2	-		CA-02		2
1B99B	CORRIDOR, BUILDING COMMON	1B99B	3' - 0"			7' - 0"	F	WD	STN	1	HM	P	A1	A2	-		CA-02		2
1B99E	CORRIDOR, BUILDING COMMON	1B99E	3' - 0"			7' - 0"	F	WD	STN	1	HM	P	A1	A2	-		CA-02		2
1B99F	CORRIDOR, BUILDING COMMON	1B99F	3' - 0"			7' - 0"	F	WD	STN	11	HM	P	A1	A2	-	90	HW-10A		
1B99G	CORRIDOR, BUILDING COMMON	1B99G	3' - 0"	3' - 0"	6' - 0"	7' - 0"	F/F	WD	STN	12	HM	P	C4/A-612	C5/A-612	-	90	HW-45M		
1B99G	CORRIDOR, BUILDING COMMON	1B99GA	3' - 0"			6' - 10"	F	HM	P	11	HM	P	B1/A-611	B2/A-611	A4/A-612		HW-29		
1B99J	CORRIDOR, BUILDING COMMON	1B99J	3' - 0"			7' - 0"	F	WD	STN	11	HM	P	A1	A2	-	90	HW-10A		
1B99K	CORRIDOR, BUILDING COMMON	1B99K	3' - 0"			7' - 0"	F	WD	STN	1	HM	P	A1	A2	-		CA-02		2
1C01	RECEPTION	1C01	3' - 0"			7' - 0"	F	WD	STN	1	HM	P	A1	A2	-		HW-07		
1C02	RECEPTION	1C02	3' - 0"			7' - 0"	F	WD	STN	1	HM	P	A1	A2	-		HW-07		
1C03	FILE ROOM, GENERAL USE	1C03	3' - 0"			7' - 0"	F	WD	STN	1	HM	P	A1	A2	-		HW-04		
1C04	EYE LANE, FOLDED ELECTRONIC	1C04	3' - 0"			7' - 0"	F	WD	STN	1	HM	P	A1	A2	-		HW-09		
1C05	STORAGE ROOM, EQUIPMENT/ SHELVING	1C05	3' - 0"			7' - 0"	F	WD	STN	1	HM	P	A1	A2	-		HW-04		
1C06	EYE LANE, FOLDED ELECTRONIC	1C06	3' - 0"			7' - 0"	F	WD	STN	1	HM	P	A1	A2	-		HW-09		
1C07	FEMALE TOILET, MULTIPLE	1C07	3' - 0"			7' - 0"	F	WD	STN	1	HM	P	A1	A2	-		HW-05		
1C08	EYE LANE, FOLDED ELECTRONIC	1C08	3' - 0"			7' - 0"	F	WD	STN	1	HM	P	A1	A2	-		HW-09		
1C09	COMMUNICATIONS ROOM	1C09	3' - 0"			7' - 0"	F	WD	STN	1	HM	P	A1	A2	-		CA-02		2
1C10	EYE LANE, FOLDED ELECTRONIC	1C10	3' - 0"			7' - 0"	F	WD	STN	1	HM	P	A1	A2	-		HW-09		
1C12	EYE LANE, FOLDED ELECTRONIC	1C12	3' - 0"			7' - 0"	F	WD	STN	1	HM	P	A1	A2	-		HW-09		
1C13	OPTHALMOLOGY PHOTOGRAPHY ROOM	1C13	3' - 0"			7' - 0"	F	WD	STN	1	HM	P	A1	A2	-		HW-09		
1C14	EYE LANE, FOLDED ELECTRONIC	1C14	3' - 0"			7' - 0"	F	WD	STN	1	HM	P	A1	A2	-		HW-09		
1C15	OPTHALMOLOGY EXAM ROOM (OCT)	1C15	3' - 0"			7' - 0"	F	WD	STN	1	HM	P	A1	A2	-		HW-09		
1C16	EYE LANE, FOLDED ELECTRONIC	1C16	3' - 0"			7' - 0"	F	WD	STN	1	HM	P	A1	A2	-		HW-09		
1C17	OPTHALMOLOGY EXAM ROOM (OCT)	1C17	3' - 0"			7' - 0"	F	WD	STN	1	HM	P	A1	A2	-		HW-09		
1C18	EYE LANE, FOLDED ELECTRONIC	1C18	3' - 0"			7' - 0"	F	WD	STN	1	HM	P	A1	A2	-		HW-09		
1C19	OPTHALMOLOGY EXAM ROOM (OCT)	1C19	3' - 0"			7' - 0"	F	WD	STN	1	HM	P	A1	A2	-		HW-09		
1C22	MALE TOILET, MULTIPLE	1C22	3' - 0"			7' - 0"	F	WD	STN	1	HM	P	A1	A2	-		HW-05		
1C24	FEMALE TOILET, MULTIPLE	1C24	3' - 0"			7' - 0"	F	WD	STN	1	HM	P	A1	A2	-		HW-05		
1C27	EYE LANE, FOLDED ELECTRONIC	1C27	3' - 0"			7' - 0"	F	WD	STN	1	HM	P	A1	A2	-		HW-09		
1C28	VISUAL FIELD ROOM	1C28	3' - 0"			7' - 0"	F	WD	STN	1	HM	P	A1	A2	-		HW-09		
1C29	EYE LANE, FOLDED ELECTRONIC	1C29	3' - 0"			7' - 0"	F	WD	STN	1	HM	P	A1	A2	-		HW-09		
1C31	EYE LANE, FOLDED ELECTRONIC	1C31	3' - 0"			7' - 0"	F	WD	STN	1	HM	P	A1	A2	-		HW-09		
1C99D	CORRIDOR, BUILDING COMMON	1C32	3' - 0"			7' - 0"	F	WD	STN	1	HM	P	A1	A2	-		HW-04A		
1C33	EYE LANE, FOLDED ELECTRONIC	1C33	3' - 0"			7' - 0"	F	WD	STN	1	HM	P	A1	A2	-		HW-09		
1C34	EYE LANE, FOLDED ELECTRONIC	1C34	3' - 0"			7' - 0"	F	WD	STN	1	HM	P	A1	A2	-		HW-09		
1C35	EYE LANE, FOLDED ELECTRONIC	1C35	3' - 0"			7' - 0"	F	WD	STN	1	HM	P	A1	A2	-		HW-09		
1C36	EYE LANE, FOLDED ELECTRONIC	1C36	3' - 0"			7' - 0"	F	WD	STN	1	HM	P	A1	A2	-		HW-09		
1C37	EYE LANE, FOLDED ELECTRONIC	1C37	3' - 0"			7' - 0"	F	WD	STN	1	HM	P	A1	A2	-		HW-09		
1C38	EYE LANE, FOLDED ELECTRONIC	1C38	3' - 0"			7' - 0"	F	WD	STN	1	HM	P	A1	A2	-		HW-09		
1C39	EYE LANE, FOLDED ELECTRONIC	1C39	3' - 0"			7' - 0"	F	WD	STN	1	HM	P	A1	A2	-		HW-09		
1C40	EYE LANE, FOLDED ELECTRONIC	1C40	3' - 0"			7' - 0"	F	WD	STN	1	HM	P	A1	A2	-		HW-09		
1C41	EYE LANE, FOLDED ELECTRONIC	1C41	3' - 0"			7' - 0"	F	WD	STN	1	HM	P	A1	A2	-		HW-09		
1C42	EYE LANE, FOLDED ELECTRONIC	1C42	3' - 0"			7' - 0"	F	WD	STN	1	HM	P	A1	A2	-		HW-09		
1C44	CONFERENCE ROOM, LARGE	1C44A	3' - 0"			7' - 0"	F	WD	STN	1	HM	P	A1	A2	-		HW-07		
1C44	CONFERENCE ROOM, LARGE	1C44B	3' - 0"			7' - 0"	F	WD	STN	1	HM	P	A1	A2	-		HW-07		
1C45	VISUAL FIELD ROOM	1C45	3' - 0"			7' - 0"	F	WD	STN	1	HM	P	A1	A2	-		HW-09		
1C46	SIMULATION ROOM - PH	1C46	3' - 0"			7' - 0"	F	WD	STN	1	HM	P	A1	A2	-		HW-09		
1C43	VISUAL FIELD ROOM	1C47	3' - 0"			7' - 0"	F	WD	STN	1	HM	P	A1	A2	-		HW-09		
1C50	EYE LANE, FOLDED ELECTRONIC	1C50	3' - 0"			7' - 0"	F	WD	STN	1	HM	P	A1	A2	-		HW-09		
1C51	EYE LANE, FOLDED ELECTRONIC	1C51	3' - 0"			7' - 0"	F	WD	STN	1	HM	P	A1	A2	-		HW-09		
1C52	EYE LANE, FOLDED ELECTRONIC	1C52	3' - 0"			7' - 0"	F	WD	STN	1	HM	P	A1	A2	-		HW-09		
1C53	EYE LANE, FOLDED ELECTRONIC	1C53	3' - 0"			7' - 0"	F	WD	STN	1	HM	P	A1	A2	-		HW-09		
1C54	EYE LANE, FOLDED ELECTRONIC	1C54	3' - 0"			7' - 0"	F	WD	STN	1	HM	P	A1	A2	-		HW-09		
1C55	EYE LANE, FOLDED ELECTRONIC	1C55	3' - 0"			7' - 0"	F	WD	STN	1	HM	P	A1	A2	-		HW-09		
1C56	EYE LANE, FOLDED ELECTRONIC	1C56	3' - 0"			7' - 0"	F	WD	STN	1	HM	P	A1	A2	-		HW-09		
1C57	EYE LANE, FOLDED ELECTRONIC	1C57	3' - 0"			7' - 0"	F	WD	STN	1	HM	P	A1	A2	-		HW-09		
1C58	EYE LANE, FOLDED ELECTRONIC	1C58	3' - 0"			7' - 0"	F	WD	STN	1	HM	P	A1	A2	-		HW-09		
1C59	EYE LANE, FOLDED ELECTRONIC	1C59	3' - 0"			7' - 0"	F	WD	STN	1	HM	P	A1	A2	-		HW-09		
1C60	EYE LANE, FOLDED ELECTRONIC	1C60	3' - 0"			7' - 0"	F	WD	STN	1	HM	P	A1	A2	-		HW-09		
1C61	OPT/ TECH WORK AREA	1C61	3' - 0"			7' - 0"	F	WD	STN	1	HM	P	A1	A2	-		HW-07		
1C62	EYE LANE, FOLDED ELECTRONIC	1C62	3' - 0"			7' - 0"	F	WD	STN	1	HM	P	A1	A2	-		HW-09		
1C63	EYE LANE, FOLDED ELECTRONIC	1C63	3' - 0"			7' - 0"	F	WD	STN	1	HM	P	A1	A2	-		HW-09		
1C64	EYE LANE, FOLDED ELECTRONIC	1C64	3' - 0"			7' - 0"	F	WD	STN	1	HM	P	A1	A2	-		HW-09		
1C65	EYE LANE, FOLDED ELECTRONIC	1C65	3' - 0"			7' - 0"	F	WD	STN	1	HM	P	A1	A2	-		HW-09		
1C66	COMMUNICATIONS ROOM	1C66	3' - 0"			7' - 0"	F	WD	STN	1	HM	P	A1	A2	-		CA-02		2
1C67	EYE LANE, FOLDED ELECTRONIC	1C67	3' - 0"			7' - 0"	F	WD	STN	1	HM	P	A1	A2	-		HW-09		
1C69	EYE LANE, FOLDED ELECTRONIC	1C69	3' - 0"			7' - 0"	F	WD	STN	1	HM	P	A1	A2	-		HW-09		
1C70	MALE TOILET, MULTIPLE	1C70	3' - 0"			7' - 0"	F	WD	STN	1	HM	P	A1	A2	-		HW-05		
1C71	LASER TREATMENT ROOM	1C71	3' - 0"			7' - 0"	F	WD	STN	1	HM	P	A1	A2	-		HW-09		
1C72	FEMALE TOILET, MULTIPLE	1C72	3' - 0"			7' - 0"	F	WD	STN	1	HM	P	A1	A2	-		HW-05		
1C73	LASER TREATMENT ROOM	1C73	3' - 0"			7' - 0"	F	WD	STN	1	HM	P	A1	A2	-		HW-09		
1C84	ADMINSTRATIVE OFFICE, SYSTEM FURNITURE	1C84	3' - 0"			7' - 0"	F	WD	STN	1	HM	P	A1	A2	-		HW-01		
1C85	STAFF LOUNGE	1C85	3' - 0"			7' - 0"	F	WD	STN	1	HM	P	A1	A2	-		HW-07		
1C86	PRIVATE OFFICE, COMMAND EEO	1C86	3' - 0"			7' - 0"	F	WD	STN	1	HM	P	A1	A2	-		HW-01		
1C87	ADMINSTRATIVE OFFICE, SYSTEM FURNITURE	1C87	3' - 0"			7' - 0"	F	WD	STN	1	HM	P	A1	A2	-		HW-01		
1C88	ADMINSTRATIVE OFFICE, SYSTEM FURNITURE	1C88	3' - 0"			7' - 0"	F	WD	STN	1	HM	P	A1	A2	-		HW-01		
1C89	ADMINSTRATIVE OFFICE, SYSTEM FURNITURE	1C89	3' - 0"			7' - 0"	F	WD	STN	1	HM	P	A1	A2	-		HW-01		
1C90	ADMINSTRATIVE OFFICE, SYSTEM FURNITURE	1C90	3' - 0"			7' - 0"	F	WD	STN	1	HM	P	A1	A2	-		HW-01		
1C99A	CORRIDOR, BUILDING COMMON	1C99A	3' - 0"			7' - 0"	F	WD	STN	1	HM	P	A1	A2	-		CA-02		2
1C99C	CORRIDOR, BUILDING COMMON	1C99C	3' - 0"			7' - 0"	F	WD	STN	1	HM	P	A1	A2	-		CA-02		2
1C99E	CORRIDOR, BUILDING COMMON	1C99E	3' - 0"			7' - 0"	F	WD	STN	1	HM	P	A1	A2	-		CA-02		2
1C99G	CORRIDOR, BUILDING COMMON	1C99G	3' - 0"			7' - 0"	F	WD	STN	1	HM	P	A1	A2	-		CA-02		2
1CST	STAIR C, BUILDING COMMON	1CST	3' - 0"			6' - 10"	N	HM	P	11	HM	P	B1/A-611	B2/A-611	A4/1-612		HW-29		
1D00	CONFERENCE ROOM, LARGE	1D00	3' - 0"			7' - 0"	F	WD	STN	1	HM	P	A1	A2	-		HW-07		
1D01C	TECHNICIAN CUBICLES	1D01	3' - 0"			7' - 0"	F	WD	STN	1	HM	P	A1	A2	-		HW-07		
1D02	TREATMENT/ EXAM ROOM	1D02	3' - 0"			7' - 0"	F	WD	STN	1	HM	P	A1	A2	-		HW-09		
1D04	TREATMENT/ EXAM ROOM	1D04	3' - 0"			7' - 0"	F	WD	STN	1	HM	P	A1	A2	-		HW-09		
1D05	EQUIPMENT STORAGE	1D05	3' - 6"			7' - 0"	F	WD	STN	1	HM	P	A1	A2	-		HW-04		
1D06	EVALUATION ROOM	1D06	3' - 0"			7' - 0"	F	WD	STN	1	HM	P	A1	A2	-		HW-09		
1D07	FULL LENGTH EYE LANE	1D07	3' - 0"			7' - 0"	F	WD	STN	1	HM	P	A1	A2	-		HW-09		
1D09	FULL LENGTH EYE LANE	1D09	3' - 0"			7' - 0"	F	WD	STN	1	HM	P	A1	A2	-		HW-09		
1D10	AIR HANDLING ROOM	1D10	3' - 0"			7' - 0"	F	WD	STN	1	HM	P	A1	A2	-		HW-04A		
1D11	FULL LENGTH EYE LANE	1D11	3' - 0"			7' - 0"	F	WD	STN	1	HM	P	A1	A2	-		HW-09		
1D12	EQUIPMENT STORAGE	1D12	3' - 0"			7' - 0"	F	WD	STN	1	HM	P	A1	A2	-		HW-04		
1D13	FULL LENGTH EYE LANE	1D13	3' - 0"			7' - 0"	F	WD	STN	1	HM	P	A1	A2	-		HW-09		
1D14	SOILED UTILITY	1D14	3' - 0"			7' - 0"	F	WD	STN	1	HM	P	A1	A2	-		HW-04		
1D15	FULL LENGTH EYE LANE	1D15	3' - 0"			7' - 0"	F	WD	STN	1	HM	P	A1	A2	-		HW-09		

GENERAL NOTES

1. SEE FLOOR PLANS FOR DOOR SYMBOL REFERENCES.

2. REFER TO SHEET A-611 FOR DOOR FRAME DETAILS.

3. DOOR OPENING LOCATIONS:

   A. IMMEDIATELY ADJACENT TO A FLANKING WALL (6" TYP INCLUDING DOOR FRAME) U.N.O.
   B. AT THE CENTERLINE OF ROOM, U.N.O.
   C. DOOR OPENINGS IN OTHER LOCATIONS ARE LOCATED BY DIMENSIONS.

4. SEE SPECIFICATIONS FOR HARDWARE SCHEDULE.

5. ALL DOOR/ WINDOW FRAMES ARE WELDED FRAMES, U.N.O.

6. GLASS:
   A. INTERIOR DOOR/ WINDOW:
      1. CLEAR FLOAT GLASS (GL-1)
   B. EXTERIOR DOOR/ WINDOW:
      1. LOW E, CLEAR, INSULATING GLASS (GL-2)
      2. SAFETY GLAZING AT ALL FULL GLASS DOORS AND SIDELIGHTS (GL-3).

7. ALL EXTERIOR DOORS SHALL HAVE METAL THRESHOLDS, SEE HARDWARE SCHEDULE.

8. SEE SPECIFICATIONS FOR VISION PANELS.

9. ALL SOLID CORE WOOD DOORS TO BE STAIN GRADE, U.N.O.

10. REFER TO SPEC SECTION 09 06 00 COLOR SCHEDULE FOR HOLLOW METAL DOOR AND FRAME PAINT COLOR.

SCHEDULE NOTES

1. AUTOMATIC SWINGING LOW ENERGY DOOR
2. CIPHER LOCK (INSTALLED ON DOOR. IOCATION OF SUMBOL ON FLOOR PLAN INDICATES THE SIDE OF THE DOOR ON WHICH THE LOCK IS INSTALLED.
3. UNEVEN PAIR DOOR
4. 180 DEGREE SWING
5. REMOTE RELEASE
6. KEYPAD

ABBREVIATIONS

ALUM	ALUMINUM
ANOD	ANODIZED
GT	GLASS TYPE
HM	HOLLOW METAL
PNT	PAINT
RM	ROOM
STN	STAIN
WD	WOOD

SYM	DESCRIPTION	DATE
	FINAL CORRECTED SET	03/26/14
	100% FINAL DESIGN SUBMISSION	02/14/14
	65% VE SUBMISSION	11/25/13
	65% SUBMISSION	04/26/13

NAVFAC

COMMONWEALTH OF VIRGINIA
PAUL G. HEFLIN
012267
3/26/2014
ARCHITECT

HDR
ARCHITECTURE | ENGINEERING & CONSULTING
1101 KING STREET
SUITE 400
ALEXANDRIA, VIRGINIA 22314
703-518-8500

APPROVED
FOR COMMANDER NAVFAC
ACTIVITY
SATISFACTORY TO DATE

DES SW DRW GW CHK HE
PM/DM CHEMENJU/HILL
BRANCH MANAGER N/A
CHIEF ENG/ARCH TOM COX

DEPARTMENT OF THE NAVY
NAVAL FACILITIES ENGINEERING COMMAND
ATLANTIC
NAVAL FACILITIES ENGINEERING COMMAND ~ NAVFAC WASHINGTON
Walter Reed National Military Medical Center - Bethesda, Maryland
NSA/Bethesda
BETHESDA, MD
P125 - TEMPORARY MEDICAL FACILITIES
PACKAGE 2 - CLINIC BUILDING
ARCHITECTURAL - DOOR SCHEDULE

SCALE: 12" = 1'-0"
EPROJECT NO.: 1151333
CONSTR. CONTR. NO. N62470-09-D-9044
NAVFAC DRAWING NO. 13065848
SHEET OF 0
A-602

C:\vt\191274-A-F2-CENTRAL_gowhite.rvt 3/19/2014 3:30:01 PM

DOOR AND FRAME SCHEDULE 603

IDENTIFICATION			PANEL							FRAME							HARDWARE		
			DIMENSIONS										FRAME DETAIL						
			WIDTH																
ROOM NO.	ROOM NAME	DOOR NO.	W1	W2	TOTAL WIDTH	H	TYPE	MATERIAL	FINISH	TYPE	MATERIAL	FINISH	HEAD	JAMB	SILL	FIRE RATING	GROUP	ELECTRICAL	NOTES
1D16	CHANGING LOCKER ROOM	1D16	3' - 0"			7' - 0"	F	WD	STN	1	HM	P	A1	A2	-		CA-02		2
1D17	CHANGING LOCKER ROOM	1D17	3' - 0"			7' - 0"	F	WD	STN	1	HM	P	A1	A2	-		CA-02		2
1D18	EQUIPMENT STORAGE	1D18	3' - 6"			7' - 0"	F	WD	STN	1	HM	P	A1	A2	-		HW-04		
1D22	ADMINISTRATIVE OFFICE	1D22	3' - 0"			7' - 0"	F	WD	STN	1	HM	P	A1	A2	-		HW-01		
1D24	ADMINISTRATIVE OFFICE	1D24	3' - 0"			7' - 0"	F	WD	STN	1	HM	P	A1	A2	-		HW-01		
1D25	TREATMENT ROOM - PH	1D25	3' - 0"			7' - 0"	F	WD	STN	1	HM	P	A1	A2	-		HW-09		
1D26	ADMINISTRATIVE OFFICE	1D26	3' - 0"			7' - 0"	F	WD	STN	1	HM	P	A1	A2	-		HW-01		
1D27	PRK/ LASIK	1D27	4' - 0"			7' - 0"	F	WD	STN	1	HM	P	A1	A2	-		HW-09		
1D28	PREP/ POST OP ROOM	1D28	4' - 0"			7' - 0"	F	WD	STN	1	HM	P	A1	A2	-		HW-09		
1D29	PRK/ LASIK	1D29	4' - 0"			7' - 0"	F	WD	STN	1	HM	P	A1	A2	-		HW-09		
1D30	MEDICATION ROOM	1D30	3' - 6"			7' - 0"	F	WD	STN	1	HM	P	A1	A2	-		CA-02		2
1D31	SUBSTERILE AREA	1D31	3' - 6"			7' - 0"	F	WD	STN	1	HM	P	A1	A2	-		HW-04		
1D32	ELECTRICAL ROOM, BUILDING COMMON	1D32A	4' - 0"			7' - 0"	F	WD	STN	1	HM	P	A1	A2	-		HW-26		
1D32	ELECTRICAL ROOM, BUILDING COMMON	1D32B	3' - 0"			7' - 0"	F	WD	STN	1	HM	P	A1	A2	-		HW-26		
1D91	ADMINSTRATIVE OFFICE, SYSTEM FURNITURE	1D91	3' - 0"			7' - 0"	F	WD	STN	1	HM	P	A1	A2	-		HW-01		
1D93	ADMINSTRATIVE OFFICE, SYSTEM FURNITURE	1D93	3' - 0"			7' - 0"	F	WD	STN	1	HM	P	A1	A2	-		HW-01		
1D94	ADMINSTRATIVE OFFICE, SYSTEM FURNITURE	1D94	3' - 0"			7' - 0"	F	WD	STN	1	HM	P	A1	A2	-		HW-01		
1D95	ADMINSTRATIVE OFFICE, SYSTEM FURNITURE	1D95	3' - 0"			7' - 0"	F	WD	STN	1	HM	P	A1	A2	-		HW-01		
1D96	ADMINSTRATIVE OFFICE, SYSTEM FURNITURE	1D96	3' - 0"			7' - 0"	F	WD	STN	1	HM	P	A1	A2	-		HW-01		
1D97	ADMINSTRATIVE OFFICE, SYSTEM FURNITURE	1D97	3' - 0"			7' - 0"	F	WD	STN	1	HM	P	A1	A2	-		HW-01		
1D99A	CORRIDOR, BUILDING COMMON	1D99A	3' - 0"			7' - 0"	F	WD	STN	1	HM	P	A1	A2	-		CA-02		2
1D99B	CORRIDOR, BUILDING COMMON	1D99B	3' - 0"			7' - 0"	F	WD	STN	1	HM	P	A1	A2	-		CA-02		
1D99C	CORRIDOR, BUILDING COMMON	1D99C	3' - 0"			7' - 0"	F	WD	STN	1	HM	P	A1	A2	-		HW-10		
1D99D	CORRIDOR, BUILDING COMMON	1D99D	3' - 0"			7' - 0"	F	WD	STN	1	HM	P	A1	A2	-		CA-02		2
1D99E	CORRIDOR, BUILDING COMMON	1D99E	3' - 0"			7' - 0"	F	WD	STN	1	HM	P	A1	A2	-		HW-10		
1D99F	CORRIDOR, BUILDING COMMON	1D99F	3' - 0"			7' - 0"	F	WD	STN	1	HM	P	A1	A2	-		CA-02		
2A01	RECORDS STORAGE, MOVABLE SHELVING	2A01	3' - 0"			7' - 0"	F	WD	STN	1	HM	P	A1	A2	-		HW-07		
2A02	PRIVATE OFFICE, SYSTEM FURNITURE	2A02	3' - 0"			7' - 0"	F	WD	STN	1	HM	P	A1	A2	-		HW-01		
2A03	PATIENT LIBRARY	2A03	3' - 0"			7' - 0"	F	WD	STN	1	HM	P	A1	A2	-		HW-07		
2A04	PRIVATE OFFICE, SYSTEM FURNITURE	2A04	3' - 0"			7' - 0"	F	WD	STN	1	HM	P	A1	A2	-		HW-01		
2A06	PRIVATE OFFICE, SYSTEM FURNITURE	2A06	3' - 0"			7' - 0"	F	WD	STN	1	HM	P	A1	A2	-		HW-01		
2A08	PRIVATE OFFICE, SYSTEM FURNITURE	2A08	3' - 0"			7' - 0"	F	WD	STN	1	HM	P	A1	A2	-		HW-01		
2A10	PRIVATE OFFICE, SYSTEM FURNITURE	2A10	3' - 0"			7' - 0"	F	WD	STN	1	HM	P	A1	A2	-		HW-01		
2A11	MALE TOILET, MULTIPLE	2A11	3' - 0"			7' - 0"	F	WD	STN	1	HM	P	A1	A2	-		HW-05		
2A12	PRIVATE OFFICE, SYSTEM FURNITURE	2A12	3' - 0"			7' - 0"	F	WD	STN	1	HM	P	A1	A2	-		HW-01		
2A14	PRIVATE OFFICE, SYSTEM FURNITURE	2A14	3' - 0"			7' - 0"	F	WD	STN	1	HM	P	A1	A2	-		HW-01		
2A16	PRIVATE OFFICE, SYSTEM FURNITURE	2A16	3' - 0"			7' - 0"	F	WD	STN	1	HM	P	A1	A2	-		HW-01		
2A18	PRIVATE OFFICE, SYSTEM FURNITURE	2A18	3' - 0"			7' - 0"	F	WD	STN	1	HM	P	A1	A2	-		HW-01		
2A20	PRIVATE OFFICE, SYSTEM FURNITURE	2A20	3' - 0"			7' - 0"	F	WD	STN	1	HM	P	A1	A2	-		HW-07		
2A21	LCPO/LPO OFFICE, SYSTEM FURNITURE	2A21	3' - 0"			7' - 0"	F	WD	STN	1	HM	P	A1	A2	-		HW-01		
2A22	COMMUNICATIONS ROOM	2A22	3' - 0"			7' - 0"	F	WD	STN	1	HM	P	A1	A2	-		CA-02		2
2A23	PRIVATE OFFICE, SYSTEM FURNITURE	2A23	3' - 0"			7' - 0"	F	WD	STN	1	HM	P	A1	A2	-		HW-01		
2A24	PRIVATE OFFICE, SYSTEM FURNITURE	2A24	3' - 0"			7' - 0"	F	WD	STN	1	HM	P	A1	A2	-		HW-01		
2A25	SHARED OFFICE	2A25	3' - 0"			7' - 0"	F	WD	STN	1	HM	P	A1	A2	-		HW-01		
2A26	SHARED OFFICE	2A26	3' - 0"			7' - 0"	F	WD	STN	1	HM	P	A1	A2	-		HW-01		
2A27	EXAM ROOM, PROVIDER	2A27	3' - 0"			7' - 0"	F	WD	STN	1	HM	P	A1	A2	-		HW-09		
2A28	EXAM ROOM, PROVIDER	2A28	3' - 0"			7' - 0"	F	WD	STN	1	HM	P	A1	A2	-		HW-09		
2A29	PRIVATE OFFICE, COMMAND EEO	2A29	3' - 0"			7' - 0"	F	WD	STN	1	HM	P	A1	A2	-		HW-01		
2A29A	TRASH HOLDING - PH	2A29A	3' - 0"			7' - 0"	F	WD	STN	1	HM	P	A1	A2	-		HW-04		
2A30A	EMPLOYEE ASSISTANCE PROGRAM	2A30A	3' - 0"			7' - 0"	F	WD	STN	1	HM	P	A1	A2	-		HW-01		
2A30B	DEPT CHIEF OFFICE	2A30B	3' - 0"			7' - 0"	F	WD	STN	1	HM	P	A1	A2	-		HW-07		
2A31	FORMS/ LITERATURE STORAGE	2A31	3' - 0"			7' - 0"	F	WD	STN	1	HM	P	A1	A2	-		HW-04		
2A33	PRIVATE OFFICE, SYSTEM FURNITURE	2A33	3' - 0"			7' - 0"	F	WD	STN	1	HM	P	A1	A2	-		HW-01		
2A34	ELECTRICAL ROOM, BUILDING COMMON	2A34	3' - 0"			7' - 0"	F	WD	STN	1	HM	P	A1	A2	-		HW-04A		
2A35	PRIVATE OFFICE, SYSTEM FURNITURE	2A35	3' - 0"			7' - 0"	F	WD	STN	1	HM	P	A1	A2	-		HW-01		
2A37	PRIVATE OFFICE, SYSTEM FURNITURE	2A37	3' - 0"			7' - 0"	F	WD	STN	1	HM	P	A1	A2	-		HW-01		
2A39	PRIVATE OFFICE, SYSTEM FURNITURE	2A39	3' - 0"			7' - 0"	F	WD	STN	1	HM	P	A1	A2	-		HW-01		
2A41	PRIVATE OFFICE, SYSTEM FURNITURE	2A41	3' - 0"			7' - 0"	F	WD	STN	1	HM	P	A1	A2	-		HW-01		
2A42	WAITING AREA, CHAIRS ONLY	2A42	3' - 8"			7' - 0"	F	WD	STN	11	HM	P	A1	A2	-	90	HW-10A		
2A43	RECEPTION	2A43	3' - 0"			7' - 0"	F	WD	STN	1	HM	P	A1	A2	-		HW-07		
2A45	ADULT SCREENING ROOM	2A45	3' - 0"			7' - 0"	F	WD	STN	1	HM	P	A1	A2	-		HW-05		
2A46	ADULT SCREENING ROOM	2A46	3' - 0"			7' - 0"	F	WD	STN	1	HM	P	A1	A2	-		HW-05		
2A47	CLINIC MANAGER	2A47	3' - 0"			7' - 0"	F	WD	STN	1	HM	P	A1	A2	-		HW-01		
2A48	AUDIO LABORATORY	2A48	3' - 0"			7' - 0"	F	WD	STN	1	HM	P	A1	A2	-		HW-01		
2A49	STAFF LOUNGE, CONFERENCE	2A49	3' - 0"			7' - 0"	F	WD	STN	1	HM	P	A1	A2	-		HW-07		
2A50	RECORDS STORAGE, MOVABLE SHELVING	2A50	3' - 0"			7' - 0"	F	WD	STN	1	HM	P	A1	A2	-		HW-04		
2A51	ADULT SCREENING ROOM	2A51	3' - 0"			7' - 0"	F	WD	STN	1	HM	P	A1	A2	-		HW-09		
2A52	ADULT SCREENING ROOM	2A52	3' - 0"			7' - 0"	F	WD	STN	1	HM	P	A1	A2	-		HW-09		
2A53	EKG ROOM	2A53	3' - 0"			7' - 0"	F	WD	STN	1	HM	P	A1	A2	-		HW-09		
2A54	VISION SCREENING	2A54	3' - 0"			7' - 0"	F	WD	STN	1	HM	P	A1	A2	-		HW-09		
2A58	EXAM ROOM	2A58	3' - 0"			7' - 0"	F	WD	STN	1	HM	P	A1	A2	-		HW-09		
2A60	EXAM ROOM	2A60	3' - 0"			7' - 0"	F	WD	STN	1	HM	P	A1	A2	-		HW-09		
2A62	EXAM ROOM	2A62	3' - 0"			7' - 0"	F	WD	STN	1	HM	P	A1	A2	-		HW-09		
2A64	NURSE OFFICE	2A64	3' - 0"			7' - 0"	F	WD	STN	1	HM	P	A1	A2	-		HW-01		
2A65	EQUIPMENT STORAGE	2A65	3' - 0"			7' - 0"	F	WD	STN	1	HM	P	A1	A2	-		HW-04		
2A66	NURSE OFFICE	2A66	3' - 0"			7' - 0"	F	WD	STN	1	HM	P	A1	A2	-		HW-01		
2A67	NURSE MANAGER, SYSTEM FURNITURE	2A67	3' - 0"			7' - 0"	F	WD	STN	1	HM	P	A1	A2	-		HW-01		
2A68	EXAM ROOM	2A68	3' - 0"			7' - 0"	F	WD	STN	1	HM	P	A1	A2	-		HW-09		
2A69	RESIDENT CUBICLE	2A69	3' - 0"			7' - 0"	F	WD	STN	1	HM	P	A1	A2	-		HW-09		
2A70	EXAM ROOM, PROVIDER	2A70	3' - 0"			7' - 0"	F	WD	STN	1	HM	P	A1	A2	-		HW-09		
2A71	RESIDENT CUBICLE	2A71	3' - 0"			7' - 0"	F	WD	STN	1	HM	P	A1	A2	-		HW-09		
2A72	EXAM ROOM, PROVIDER	2A72	3' - 0"			7' - 0"	F	WD	STN	1	HM	P	A1	A2	-		HW-09		
2A73	PROVIDER OFFICE	2A73	3' - 0"			7' - 0"	F	WD	STN	1	HM	P	A1	A2	-		HW-09		
2A99B	CORRIDOR, BUILDING COMMON	2A99B	3' - 0"			7' - 0"	F	WD	STN	1	HM	P	A1	A2	-		CA-02		2
2A99J	CORRIDOR, BUILDING COMMON	2A99E	3' - 0"			7' - 0"	F	WD	STN	1	HM	P	A1	A2	-		CA-02		2
2A99F	CORRIDOR, BUILDING COMMON	2A99F	3' - 0"			7' - 0"	F	WD	STN	1	HM	P	A1	A2	-		CA-02		2
2A99J	CORRIDOR, BUILDING COMMON	2A99J	3' - 0"			7' - 0"	F	WD	STN	1	HM	P	A1	A2	-		HW-10		
2A99L	CORRIDOR, BUILDING COMMON	2A99L	3' - 0"			7' - 0"	F	WD	STN	1	HM	P	A1	A2	-		CA-02		2
2A99M	VESTIBULE, BUILDING COMMON	2A99MA	3' - 0"			6' - 10"	N	HM	P	11	HM	P	B1/A-611	B2/A-611	A4/A-612		HW-29		
2A99M	VESTIBULE, BUILDING COMMON	2A99MB	3' - 0"			7' - 0"	N	HM	P	1	HM	P	A1	A2			HW-26		

GENERAL NOTES

1. SEE FLOOR PLANS FOR DOOR SYMBOL REFERENCES.

2. REFER TO SHEET A-611 FOR DOOR FRAME DETAILS.

3. DOOR OPENING LOCATIONS:

A. IMMEDIATELY ADJACENT TO A FLANKING WALL (6" TYP INCLUDING DOOR FRAME) U.N.O.
B. AT THE CENTERLINE OF ROOM, U.N.O.
C. DOOR OPENINGS IN OTHER LOCATIONS ARE LOCATED BY DIMENSIONS.

4. SEE SPECIFICATIONS FOR HARDWARE SCHEDULE.

5. ALL DOOR/ WINDOW FRAMES ARE WELDED FRAMES, U.N.O.

6. GLASS:
A. INTERIOR DOOR/ WINDOW:
1. CLEAR FLOAT GLASS (GL-1)
B. EXTERIOR DOOR/ WINDOW:
1. LOW E, CLEAR, INSULATING GLASS (GL-2)
2. SAFETY GLAZING AT ALL FULL GLASS DOORS AND SIDELIGHTS (GL-3).

7. ALL EXTERIOR DOORS SHALL HAVE METAL THRESHOLDS, SEE HARDWARE SCHEDULE.

8. SEE SPECIFICATIONS FOR VISION PANELS.

9. ALL SOLID CORE WOOD DOORS TO BE STAIN GRADE, U.N.O.

10. REFER TO SPEC SECTION 09 06 00 COLOR SCHEDULE FOR HOLLOW METAL DOOR AND FRAME PAINT COLOR.

SCHEDULE NOTES

1. AUTOMATIC SWINGING LOW ENERGY DOOR
2. CIPHER LOCK (INSTALLED ON DOOR. lOCATION OF SUMBOL ON FLOOR PLAN INDICATES THE SIDE OF THE DOOR ON WHICH THE LOCK IS INSTALLED.
3. UNEVEN PAIR DOOR
4. 180 DEGREE SWING
5. REMOTE RELEASE
6. KEYPAD

ABBREVIATIONS

ALUM	ALUMINUM
ANOD	ANODIZED
GT	GLASS TYPE
HM	HOLLOW METAL
PNT	PAINT
RM	ROOM
STN	STAIN
WD	WOOD

SYM	DESCRIPTION	DATE
	FINAL CORRECTED SET	03/26/14
	100% FINAL DESIGN SUBMISSION	02/14/14
	65% VE SUBMISSION	11/25/13
	65% SUBMISSION	04/26/13

NAVFAC

COMMONWEALTH OF VIRGINIA
PAUL G. HEFLIN
012267
3/26/2014
ARCHITECT

HDR
ARCHITECTURE | ENGINEERING & CONSULTING
1101 KING STREET
SUITE 400
ALEXANDRIA, VIRGINIA 22314
703-518-8500

APPROVED

FOR COMMANDER NAVFAC

ACTIVITY

SATISFACTORY TO DATE

DES SW | DRW GW | CHK HE
PM/DM CHEMENJU/HILL
BRANCH MANAGER N/A
CHIEF ENG/ARCH TOM COX

DEPARTMENT OF THE NAVY
NAVAL FACILITIES ENGINEERING COMMAND
NAVAL FACILITIES ENGINEERING COMMAND ~ NAVFAC WASHINGTON
ATLANTIC
Walter Reed National Military Medical Center - Bethesday, Maryland

NSA/Bethesda BETHESDA, MD

P125 - TEMPORARY MEDICAL FACILITIES
PACKAGE 2 - CLINIC BUILDING

ARCHITECTURAL - DOOR SCHEDULE

SCALE: 12" = 1'-0"
EPROJECT NO.: 1151333
CONSTR. CONTR. NO. N62470-09-D-9044
NAVFAC DRAWING NO. 13065849
SHEET OF 0

A-603

C:\rvt\191274-A-F2-CENTRAL_gowhite.rvt 3/19/2014 3:30:04 PM

DOOR AND FRAME SCHEDULE 604

IDENTIFICATION			PANEL							FRAME							HARDWARE		
			DIMENSIONS										FRAME DETAIL						
			WIDTH																
ROOM NO.	ROOM NAME	DOOR NO.	W1	W2	TOTAL WIDTH	H	TYPE	MATERIAL	FINISH	TYPE	MATERIAL	FINISH	HEAD	JAMB	SILL	FIRE RATING	GROUP	ELECTRICAL	NOTES
2B00	INFORMATION DESK	2B00	3' - 0"			7' - 0"	F	WD	STN	1	HM	P					HW-01		
2B01	ADMINISTRATIVE OFFICE, STANDARD FURNITURE	2B01	3' - 0"			7' - 0"	F	WD	STN	1	HM	P	A1	A2	-		HW-01		
2B02	STORAGE ROOM, EQUIPMENT/ SHELVING	2B02	3' - 0"	1' - 6"	4' - 6"	7' - 0"	F/F	WD	STN	1	HM	P	A1	A2	-		HW-40		3
2B03	RECORDS ADMINISTRATIVE OFFICE - PH	2B03	3' - 0"			7' - 0"	F	WD	STN	1	HM	P	A1	A2	-		HW-01		
2B04	GROUP ACTIVITY ROOM	2B04	3' - 0"			7' - 0"	F	WD	STN	1	HM	P	A1	A2	-		HW-07		
2B06	ADMINISTRATIVE OFFICE, DOUBLE OCCUPANCY - PH	2B06	3' - 0"			7' - 0"	F	WD	STN	1	HM	P	A1	A2	-		HW-07		
2B08	ADMINISTRATIVE OFFICE, STANDARD FURNITURE	2B08	3' - 0"			7' - 0"	F	WD	STN	1	HM	P	A1	A2	-		HW-01		
2B10	CONSULTATION ROOM	2B10	3' - 0"			7' - 0"	F	WD	STN	1	HM	P	A1	A2	-		HW-01		
2B13	ADMINISTRATIVE OFFICE, DOUBLE OCCUPANCY - PH	2B13	3' - 0"			7' - 0"	F	WD	STN	1	HM	P	A1	A2	-		HW-07		
2B14	STAFF LOUNGE	2B14	3' - 0"			7' - 0"	F	WD	STN	1	HM	P	A1	A2	-		HW-07		
2B15	ADMINISTRATIVE OFFICE, DOUBLE OCCUPANCY - PH	2B15	3' - 0"			7' - 0"	F	WD	STN	1	HM	P	A1	A2	-		HW-07		
2B16	CONFERENCE ROOM, LARGE	2B16	3' - 0"			7' - 0"	F	WD	STN	1	HM	P	A1	A2	-		HW-07		
2B18A	FORMS/ LITERATURE STORAGE	2B18A	3' - 0"			7' - 0"	F	WD	STN	1	HM	P	A1	A2	-		HW-04		
2B19	CONFERENCE ROOM/ ACTIVITY ROOM	2B19	3' - 0"			7' - 0"	F	WD	STN	1	HM	P	A1	A2			HW-07		
2B21	TOILET	2B21	3' - 0"			7' - 0"	F	WD	STN	1	HM	P	A1	A2			HW-05		
2B22	ADMIN OFFICE	2B22	3' - 0"			7' - 0"	F	WD	STN	1	HM	P	A1	A2	-		HW-01		
2B24	ADMIN OFFICE	2B24	3' - 0"			7' - 0"	F	WD	STN	1	HM	P	A1	A2	-		HW-01		
2B25	PROCEDURE/ INTERVIEW ROOM	2B25	3' - 0"			7' - 0"	F	WD	STN	1	HM	P	A1	A2	-		HW-09		
2B26	ADMIN OFFICE	2B26	3' - 0"			7' - 0"	F	WD	STN	1	HM	P	A1	A2	-		HW-01		
2B27	FEMALE TOILET, SINGLE	2B27	3' - 0"			7' - 0"	F	WD	STN	1	HM	P	A1	A2	-		HW-05		
2B28	ADMIN OFFICE	2B28	3' - 0"			7' - 0"	F	WD	STN	1	HM	P	A1	A2	-		HW-01		
2B29	CONFERENCE ROOM, LARGE	2B29A	3' - 0"			7' - 0"	F	WD	STN	1	HM	P	A1	A2	-		HW-07		
2B29	CONFERENCE ROOM, LARGE	2B29B	3' - 0"			7' - 0"	F	WD	STN	1	HM	P	A1	A2	-		HW-07		
2B30	NCOIC/ LCPO/ LPO OFFICE	2B30	3' - 0"			7' - 0"	F	WD	STN	1	HM	P	A1	A2	-		HW-01		
2B34	MENTAL HEALTH PROVIDER OFFICE	2B34	3' - 0"			7' - 0"	F	WD	STN	1	HM	P	A1	A2	-		HW-01		
2B35	MENTAL HEALTH PROVIDER OFFICE	2B35	3' - 0"			7' - 0"	F	WD	STN	1	HM	P	A1	A2	-		HW-01		
2B36	MENTAL HEALTH PROVIDER OFFICE	2B36	3' - 0"			7' - 0"	F	WD	STN	1	HM	P	A1	A2	-		HW-01		
2B37	MENTAL HEALTH PROVIDER OFFICE	2B37	3' - 0"			7' - 0"	F	WD	STN	1	HM	P	A1	A2	-		HW-01		
2B38	SECRETARY W/ VISITOR WAITING	2B38	3' - 0"			7' - 0"	F	WD	STN	1	HM	P	A1	A2	-		HW-01		
2B39	MENTAL HEALTH PROVIDER OFFICE	2B39	3' - 0"			7' - 0"	F	WD	STN	1	HM	P	A1	A2	-		HW-01		
2B40	MALE TOILET, SINGLE	2B40	3' - 0"			7' - 0"	F	WD	STN	1	HM	P	A1	A2	-		HW-05		
2B41	MENTAL HEALTH PROVIDER OFFICE	2B41	3' - 0"			7' - 0"	F	WD	STN	1	HM	P	A1	A2	-		HW-01		
2B42	TOILET	2B42	3' - 0"			7' - 0"	F	WD	STN	1	HM	P	A1	A2	-		HW-05		
2B43	MENTAL HEALTH PROVIDER OFFICE	2B43	3' - 0"			7' - 0"	F	WD	STN	1	HM	P	A1	A2	-		HW-01		
2B45	MENTAL HEALTH PROVIDER OFFICE	2B45	3' - 0"			7' - 0"	F	WD	STN	1	HM	P	A1	A2	-		HW-01		
2B46	GROUP THERAPY ROOM	2B46	3' - 0"			7' - 0"	F	WD	STN	1	HM	P	A1	A2	-		HW-07		
2B47	MENTAL HEALTH PROVIDER OFFICE	2B47	3' - 0"			7' - 0"	F	WD	STN	1	HM	P	A1	A2	-		HW-01		
2B48A	ELECTRICAL ROOM, BUILDING COMMON	2B48A	3' - 0"	3' - 0"	6' - 0"	7' - 0"	F/F	WD	STN	1	HM	P	A1	A2	-		HW-40		
2B49	CHIEF'S OFFICE	2B49	3' - 0"			7' - 0"	F	WD	STN	1	HM	P	A1	A2	-		HW-01		
2B50	MENTAL HEALTH PROVIDER OFFICE	2B50	3' - 0"			7' - 0"	F	WD	STN	1	HM	P	A1	A2			HW-01		
2B51	MENTAL HEALTH PROVIDER OFFICE	2B51	3' - 0"			7' - 0"	F	WD	STN	1	HM	P	A1	A2	-		HW-01		
2B52	MENTAL HEALTH PROVIDER OFFICE	2B52	3' - 0"			7' - 0"	F	WD	STN	1	HM	P	A1	A2	-		HW-01		
2B53	MENTAL HEALTH PROVIDER OFFICE	2B53	3' - 0"			7' - 0"	F	WD	STN	1	HM	P	A1	A2	-		HW-01		
2B54	MENTAL HEALTH PROVIDER OFFICE	2B54	3' - 0"			7' - 0"	F	WD	STN	1	HM	P	A1	A2	-		HW-01		
2B55	MENTAL HEALTH PROVIDER OFFICE	2B55	3' - 0"			7' - 0"	F	WD	STN	1	HM	P	A1	A2	-		HW-01		
2B56	RECORDS STORAGE, FIXED SHELVING	2B56	3' - 0"			7' - 0"	F	WD	STN	1	HM	P	A1	A2	-		HW-08		
2B57	CHAPLAIN OFFICE	2B57	3' - 0"			7' - 0"	F	WD	STN	1	HM	P	A1	A2	-		HW-01		
2B58	CONFERENCE ROOM/ LIBRARY	2B58	3' - 0"			7' - 0"	F	WD	STN	1	HM	P	A1	A2	-		HW-07		
2B59	CHAPLAIN OFFICE	2B59	3' - 0"			7' - 0"	F	WD	STN	1	HM	P	A1	A2	-		HW-01		
2B60	CHAPLAIN OFFICE	2B60	3' - 0"			7' - 0"	F	WD	STN	1	HM	P	A1	A2	-		HW-01		
2B61	CHAPLAIN OFFICE	2B61	3' - 0"			7' - 0"	F	WD	STN	1	HM	P	A1	A2	-		HW-01		
2B62	CHAPLAIN OFFICE	2B62	3' - 0"			7' - 0"	F	WD	STN	1	HM	P	A1	A2	-		HW-01		
2B64	CHAPLAIN OFFICE	2B64	3' - 0"			7' - 0"	N	WD	STN	1	HM	P	A1	A2	-		HW-01		
2B73	MALE TOILET, MULTIPLE	2B73	3' - 0"			7' - 0"	F	WD	STN	1	HM	P	A1	A2	-		HW-05		
2B78A	STUDENT RELIGIOUS PROGRAM - PH	2B78	3' - 0"			7' - 0"	N	WD	STN	1	HM	P	A1	A2	-		HW-07		
2B81	CONFERENCE ROOM, LARGE	2B81	3' - 0"			7' - 0"	F	WD	STN	1	HM	P	A1	A2	-		HW-07		
2B82	FEMALE TOILET, MULTIPLE	2B82	3' - 0"			7' - 0"	F	WD	STN	1	HM	P	A1	A2	-		HW-05		
2B83	JANITORS' CLOSET	2B83	3' - 0"			7' - 0"	F	WD	STN	1	HM	P	A1	A2	-		HW-07		
2B84	ELECTRICAL ROOM, BUILDING COMMON	2B84	3' - 0"	3' - 0"	6' - 0"	7' - 0"	F/F	WD	STN	1	HM	P	A1	A2	-		HW-40		
2B85	MALE TOILET, MULTIPLE	2B85	3' - 0"			7' - 0"	F	WD	STN	1	HM	P	A1	A2	-		HW-05		
2B86	COMMUNICATIONS ROOM	2B86	3' - 0"			7' - 0"	F	WD	STN	1	HM	P	A1	A2	-		CA-02		2
2B99A	CORRIDOR, BUILDING COMMON	2B99A	3' - 0"			7' - 0"	F	WD	STN	1	HM	P	A1	A2	-		CA-02		2
2B99B	CORRIDOR, BUILDING COMMON	2B99B	3' - 0"			7' - 0"	F	WD	STN	1	HM	P	A1	A2	-		CA-02		2
2B99C	CORRIDOR, BUILDING COMMON	2B99C	3' - 0"			7' - 0"	F	WD	STN	11	HM	P	A1	A2	-	90	HW-10		
2B99C	CORRIDOR, BUILDING COMMON	2B99D	3' - 0"			7' - 0"	F	WD	STN	1	HM	P	A1	A2	-		CA-02		2
2B99E	CORRIDOR, BUILDING COMMON	2B99E	3' - 0"			7' - 0"	F	WD	STN	1	HM	P	A1	A2			CA-02		2
2B99J	CORRIDOR, BUILDING COMMON	2B99J	3' - 0"			7' - 0"	F	WD	STN	11	HM	P	A1	A2	-	90	HW-10A		
2B99K	CORRIDOR, BUILDING COMMON	2B99K	3' - 0"			7' - 0"	F	WD	STN	1	HM	P	A1	A2	-		CA-02		2
2B99L	CORRIDOR, BUILDING COMMON	2B99L	3' - 0"			7' - 0"	F	WD	STN	1	HM	P	A1	A2	-		CA-02		2
2B99N	CORRIDOR, BUILDING COMMON	2B99N	3' - 0"			7' - 0"	F	WD	STN	11	HM	P	A1	A2		90	HW-10A		
2BST	STAIR B, BUILDING COMMON	2BST	3' - 0"			6' - 10"	N	HM	P	11	HM	P	B1/A-611	B2/A-611	A4/A-612		HW-29		
2C00	LCPO/LPO OFFICE, SYSTEM FURNITURE	2C00	3' - 0"			7' - 0"	N	WD	STN	1	HM	P	A1	A2	-		HW-01		
2C03	MILITARY TESTING - PH	2C03	3' - 0"			7' - 0"	F	WD	STN	1	HM	P	A1	A2	-		CA-02		2
2C03	MILITARY TESTING - PH	2C03A	3' - 0"			7' - 0"	F	WD	STN	1	HM	P	A1	A2	-		HW-07		
2C04	TOILET, COMMANDER	2C04	3' - 0"			7' - 0"	F	WD	STN	1	HM	P	A1	A2	-		HW-05		
2C05	WAITING ROOM	2C05	3' - 0"			7' - 0"	F	WD	STN	1	HM	P	A1	A2	-		HW-07		
2C05B	EQUIPMENT STORAGE	2C05A	3' - 0"			7' - 0"	F	WD	STN	1	HM	P	A1	A2	-		HW-04		
2C06	TOILET, COMMANDER	2C06	3' - 0"			7' - 0"	F	WD	STN	1	HM	P	A1	A2	-		HW-05		
2C07	STORAGE ROOM, SHELVING	2C07	3' - 0"			7' - 0"	F	WD	STN	1	HM	P	A1	A2	-		HW-04		
2C08	ADMINISTRATIVE OFFICE, DOUBLE OCCUPANCY - PH	2C08	3' - 0"			7' - 0"	F	WD	STN	1	HM	P	A1	A2	-		HW-07		
2C09	CLASSROOM, TABLE W/ CHAIR	2C09A	3' - 0"			7' - 0"	N	WD	STN	1	HM	P	A1	A2	-		HW-07		
2C09	CLASSROOM, TABLE W/ CHAIR	2C09B	3' - 0"			7' - 0"	N	WD	STN	1	HM	P	A1	A2	-		HW-07		
2C10	PRIVATE OFFICE, DEPARTMENT OF SURGERY	2C10	3' - 0"			7' - 0"	F	WD	STN	1	HM	P	A1	A2	-		HW-07		
2C11	PRIVATE OFFICE, DEPARTMENT OF SURGERY	2C11	3' - 0"			7' - 0"	F	WD	STN	1	HM	P	A1	A2	-		HW-01		
2C12	PRIVATE OFFICE, DEPUTY COMMANDER OF MEDICINE	2C12	3' - 0"			7' - 0"	F	WD	STN	1	HM	P	A1	A2	-		HW-01		
2C13	PRIVATE OFFICE, DEPUTY COMMANDER OF SURGERY	2C13	3' - 0"			7' - 0"	F	WD	STN	1	HM	P	A1	A2	-		HW-01		
2C14	PRIVATE OFFICE, DEPUTY COMMANDER OF SURGERY	2C14	3' - 0"			7' - 0"	F	WD	STN	1	HM	P	A1	A2	-		HW-01		
2C15	PRIVATE OFFICE, DEPUTY COMMANDER OF SURGERY	2C15	3' - 0"			7' - 0"	F	WD	STN	1	HM	P	A1	A2	-		HW-01		
2C16	PRIVATE OFFICE, ACOS OF PUBLIC HEALTH	2C16	3' - 0"			7' - 0"	F	WD	STN	1	HM	P	A1	A2	-		HW-01		
2C17	PRIVATE OFFICE, DEPUTY COMMANDER OF SURGERY	2C17	3' - 0"			7' - 0"	F	WD	STN	1	HM	P	A1	A2	-		HW-01		
2C18	PRIVATE OFFICE, PUBLIC HEALTH ADMIN SUPPORT	2C18	3' - 0"			7' - 0"	F	WD	STN	1	HM	P	A1	A2	-		HW-01		
2C19	PRIVATE OFFICE, PUBLIC HEALTH ADMIN SUPPORT	2C19	3' - 0"			7' - 0"	F	WD	STN	1	HM	P	A1	A2	-		HW-01		
2C20	PRIVATE OFFICE, STANDARD FURNITURE	2C20	3' - 0"			7' - 0"	F	WD	STN	1	HM	P	A1	A2	-		HW-01		
2C21	PRIVATE OFFICE, COMMAND EEO	2C21	3' - 0"			7' - 0"	F	WD	STN	1	HM	P	A1	A2	-		HW-01		
2C22	PRIVATE OFFICE, STANDARD FURNITURE	2C22	3' - 0"			7' - 0"	F	WD	STN	1	HM	P	A1	A2	-		HW-01		
2C23	PRIVATE OFFICE, STANDARD FURNITURE	2C23	3' - 0"			7' - 0"	F	WD	STN	1	HM	P	A1	A2	-		HW-01		
2C24	PRIVATE OFFICE, STANDARD FURNITURE	2C24	3' - 0"			7' - 0"	F	WD	STN	1	HM	P	A1	A2	-		HW-01		
2C25	CONFERENCE ROOM, LARGE	2C25	3' - 0"			7' - 0"	F	WD	STN	1	HM	P	A1	A2	-		HW-07		
2C26	PRIVATE OFFICE, STANDARD FURNITURE	2C26	3' - 0"			7' - 0"	F	WD	STN	1	HM	P	A1	A2	-		HW-01		
2C28	FILE STORAGE ROOM	2C28	3' - 0"	3' - 0"	6' - 0"	7' - 0"	F/F	WD	STN	1	HM	P	A1	A2	-		HW-40		
2C29	PRIVATE OFFICE, DEPARTMENT OF MEDICINE	2C29	3' - 0"			7' - 0"	F	WD	STN	1	HM	P	A1	A2	-		HW-01		

GENERAL NOTES

1. SEE FLOOR PLANS FOR DOOR SYMBOL REFERENCES.

2. REFER TO SHEET A-611 FOR DOOR FRAME DETAILS.

3. DOOR OPENING LOCATIONS:

   A. IMMEDIATELY ADJACENT TO A FLANKING WALL (6" TYP INCLUDING DOOR FRAME) U.N.O.
   B. AT THE CENTERLINE OF ROOM, U.N.O.
   C. DOOR OPENINGS IN OTHER LOCATIONS ARE LOCATED BY DIMENSIONS.

4. SEE SPECIFICATIONS FOR HARDWARE SCHEDULE.

5. ALL DOOR/ WINDOW FRAMES ARE WELDED FRAMES, U.N.O.

6. GLASS:
   A. INTERIOR DOOR/ WINDOW:
      1. CLEAR FLOAT GLASS (GL-1)
   B. EXTERIOR DOOR/ WINDOW:
      1. LOW E, CLEAR, INSULATING GLASS (GL-2)
      2. SAFETY GLAZING AT ALL FULL GLASS DOORS AND SIDELIGHTS (GL-3).

7. ALL EXTERIOR DOORS SHALL HAVE METAL THRESHOLDS, SEE HARDWARE SCHEDULE.

8. SEE SPECIFICATIONS FOR VISION PANELS.

9. ALL SOLID CORE WOOD DOORS TO BE STAIN GRADE, U.N.O.

10. REFER TO SPEC SECTION 09 06 00 COLOR SCHEDULE FOR HOLLOW METAL DOOR AND FRAME PAINT COLOR.

SCHEDULE NOTES

1. AUTOMATIC SWINGING LOW ENERGY DOOR
2. CIPHER LOCK (INSTALLED ON DOOR. IOCATION OF SUMBOL ON FLOOR PLAN INDICATES THE SIDE OF THE DOOR ON WHICH THE LOCK IS INSTALLED.
3. UNEVEN PAIR DOOR
4. 180 DEGREE SWING
5. REMOTE RELEASE
6. KEYPAD

ABBREVIATIONS

ALUM	ALUMINUM
ANOD	ANODIZED
GT	GLASS TYPE
HM	HOLLOW METAL
PNT	PAINT
RM	ROOM
STN	STAIN
WD	WOOD

SYM	DESCRIPTION	DATE
	FINAL CORRECTED SET	03/26/14
	100% FINAL DESIGN SUBMISSION	02/14/14
	65% VE SUBMISSION	11/25/13
	65% SUBMISSION	04/26/13

NAVFAC

COMMONWEALTH OF VIRGINIA
PAUL G. HEFLIN
012267
3/26/2014
ARCHITECT

HDR
ARCHITECTURE | ENGINEERING & CONSULTING
1101 KING STREET
SUITE 400
ALEXANDRIA, VIRGINIA 22314
703-518-8500

APPROVED
FOR COMMANDER NAVFAC
ACTIVITY
SATISFACTORY TO DATE

DES	SW	DRW	GW	CHK	HE
PM/DM	CHEMENJU/HILL				
BRANCH MANAGER	N/A				
CHIEF ENG/ARCH	TOM COX				

DEPARTMENT OF THE NAVY
NAVAL FACILITIES ENGINEERING COMMAND ATLANTIC
NAVAL FACILITIES ENGINEERING COMMAND ~ NAVFAC WASHINGTON
Walter Reed National Military Medical Center - Bethesda, Maryland
NSA/Bethesda
BETHESDA, MD
P125 - TEMPORARY MEDICAL FACILITIES
PACKAGE 2 - CLINIC BUILDING
ARCHITECTURAL - DOOR SCHEDULE

SCALE: 12" = 1'-0"
EFPROJECT NO.: 1151333
CONSTR. CONTR. NO.: N62470-09-D-9044
NAVFAC DRAWING NO.: 13065850
SHEET A-604 OF 0

C:\wf\191274-A-F2-CENTRAL_gnwhite.wt 3/19/2014 3:30:08 PM

DOOR AND FRAME SCHEDULE 605

IDENTIFICATION			PANEL							FRAME							HARDWARE		
			DIMENSIONS										FRAME DETAIL						
			WIDTH																
ROOM NO.	ROOM NAME	DOOR NO.	W1	W2	TOTAL WIDTH	H	TYPE	MATERIAL	FINISH	TYPE	MATERIAL	FINISH	HEAD	JAMB	SILL	FIRE RATING	GROUP	ELECTRICAL	NOTES
2C30	PRIVATE OFFICE, DEPARTMENT OF MEDICINE	2C30	3' - 0"			7' - 0"	F	WD	STN	1	HM	P	A1	A2	-		HW-01		
2C31	PRIVATE OFFICE, DEPARTMENT OF MEDICINE	2C31	3' - 0"			7' - 0"	F	WD	STN	1	HM	P	A1	A2	-		HW-01		
2C32	COPY ROOM	2C32	3' - 0"			7' - 0"	F	WD	STN	1	HM	P	A1	A2	-		HW-04		
2C33	PRIVATE OFFICE, CLINICAL SUPPORT ADMIN	2C33	3' - 0"			7' - 0"	F	WD	STN	1	HM	P	A1	A2	-		HW-07		
2C34	PRIVATE OFFICE, DEPARTMENT OF MEDICINE	2C34	3' - 0"			7' - 0"	F	WD	STN	1	HM	P	A1	A2	-		HW-07		
2C36	MALE TOILET, MULTIPLE	2C36	3' - 0"			7' - 0"	N	WD	STN	1	HM	P	A1	A2	-		HW-05		
2C37	ADMINISTRATIVE OFFICE, STANDARD FURNITURE	2C37	3' - 0"			7' - 0"	F	WD	STN	1	HM	P	A1	A2			HW-01		
2C38	ELECTRICAL ROOM, BUILDING COMMON	2C38	3' - 0"			7' - 0"	F	WD	STN	1	HM	P	A1	A2	-		HW-40		
2C39	EQUIPMENT STORAGE	2C39	3' - 0"			7' - 0"	F	WD	STN	1	HM	P	A1	A2	-		HW-04		
2C41	ADMINISTRATIVE OFFICE, HEALTH PHYSICISTS	2C41	3' - 0"			7' - 0"	F	WD	STN	1	HM	P	A1	A2	-		HW-01		
2C43	ADMINISTRATIVE OFFICE, HEALTH PHYSICISTS	2C43	3' - 0"			7' - 0"	F	WD	STN	1	HM	P	A1	A2	-		HW-01		
2C44	FEMALE TOILET, MULTIPLE	2C44	3' - 0"			7' - 0"	F	WD	STN	1	HM	P	A1	A2	-		HW-05		
2C45	ADMINISTRATIVE OFFICE, HEALTH PHYSICISTS	2C45	3' - 0"			7' - 0"	F	WD	STN	1	HM	P	A1	A2	-		HW-01		
2C46	JANITORS' CLOSET	2C46	3' - 0"			7' - 0"	F	WD	STN	1	HM	P	A1	A2	-		HW-04A		
2C47	ADMINISTRATIVE OFFICE, HEALTH PHYSICISTS	2C47	3' - 0"			7' - 0"	F	WD	STN	1	HM	P	A1	A2	-		HW-01		
2C99E	CORRIDOR, BUILDING COMMON	2C49	3' - 0"			7' - 0"	N	WD	STN	1	HM	P	A1	A2	-		HW-07		2
2C50	ANALYTICAL COUNTING ROOM - PH	2C50	3' - 0"			7' - 0"	N	WD	STN	1	HM	P	A1	A2	-		HW-07		2
2C51	RADIATION PROTECTION LABORATORY	2C51	3' - 0"			7' - 0"	N	WD	STN	1	HM	P	A1	A2	-		HW-07		
2C63	CHAPLAIN OFFICE	2C63	3' - 0"			7' - 0"	F	WD	STN	1	HM	P	A1	A2	-		HW-01		
2C65	CHAPLAIN OFFICE	2C65	3' - 0"			7' - 0"	F	WD	STN	1	HM	P	A1	A2	-		HW-01		
2C66	CHAPLAIN OFFICE	2C66	3' - 0"			7' - 0"	N	WD	STN	1	HM	P	A1	A2	-		HW-01		
2C67	CHAPLAIN OFFICE	2C67	3' - 0"			7' - 0"	N	WD	STN	1	HM	P	A1	A2	-		HW-01		
2C68	CHAPLAIN OFFICE	2C68	3' - 0"			7' - 0"	N	WD	STN	1	HM	P	A1	A2	-		HW-01		
2C69	DUTY ROOM - PH	2C69	3' - 0"			7' - 0"	N	WD	STN	1	HM	P	A1	A2	-		HW-01		
2C70	RELIGIOUS PROGRAM SPECIALIST OFFICE	2C70	3' - 0"			7' - 0"	N	WD	STN	1	HM	P	A1	A2	-		HW-01		
2C71	RELIGIOUS PROGRAM SPECIALIST OFFICE	2C71	3' - 0"			7' - 0"	F	WD	STN	1	HM	P	A1	A2	-		HW-01		
2C72	RELIGIOUS PROGRAM SPECIALIST OFFICE	2C72	3' - 0"			7' - 0"	F	WD	STN	1	HM	P	A1	A2	-		HW-01		
2C77	CHAPLAIN OFFICE	2C77	3' - 0"			7' - 0"	N	WD	STN	1	HM	P	A1	A2	-		HW-01		
2C79	CHAPLAIN OFFICE	2C79	3' - 0"			7' - 0"	F	WD	STN	1	HM	P	A1	A2	-		HW-01		
2C80	RELIGIOUS PROGRAM SPECIALIST OFFICE	2C80	3' - 0"			7' - 0"	F	WD	STN	1	HM	P	A1	A2	-		HW-01		
2C99B	CORRIDOR, BUILDING COMMON	2C99B	3' - 0"			7' - 0"	F	WD	STN	1	HM	P	A1	A2	-		CA-02		2
2C99C	CORRIDOR, BUILDING COMMON	2C99C	3' - 0"			6' - 10"	N	HM	P	11	HM	P	B1/A-611	B2/A-611	C1/A-612		CA-02A		
2C99D	CORRIDOR, BUILDING COMMON	2C99D	3' - 0"			7' - 0"	N	WD	STN	1	HM	P	A1	A2	-		CA-02		2
2C99N	CORRIDOR, BUILDING COMMON	2C99N	3' - 0"			7' - 0"	F	WD	STN	1	HM	P	A1	A2	-		CA-02		2
2CST	STAIR C, BUILDING COMMON	2CST	3' - 0"			6' - 10"	N	HM	P	11	HM	P	B1/A-611	B2/A-611	A4/A-612		HW-29		

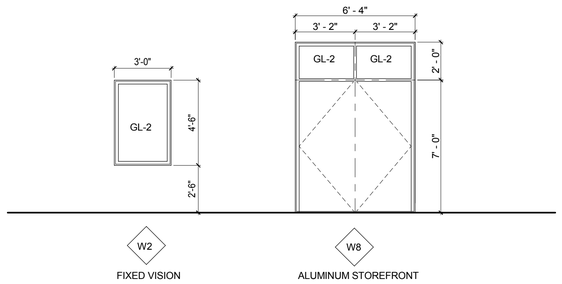

B1 EXTERIOR WINDOW TYPES
1/4" = 1'-0"

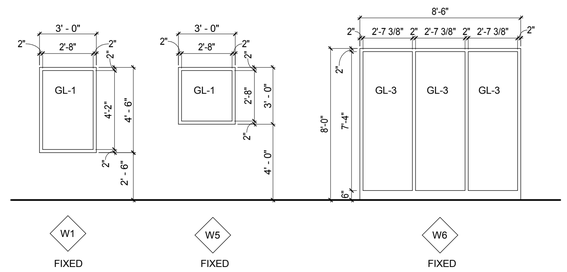

B2 INTERIOR WINDOW TYPES
1/4" = 1'-0"

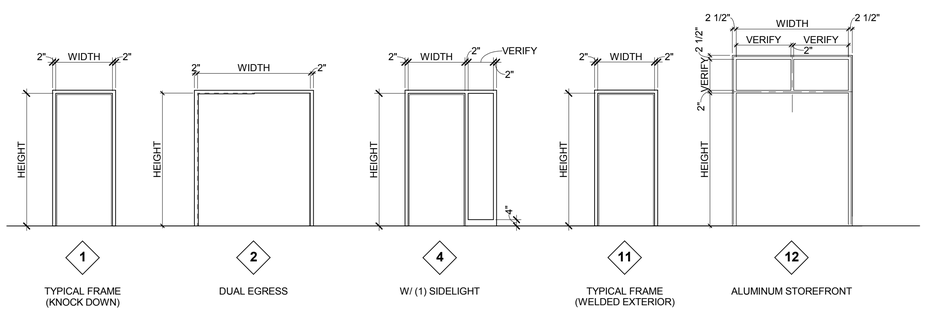

A1 DOOR FRAME TYPES
1/4" = 1'-0"

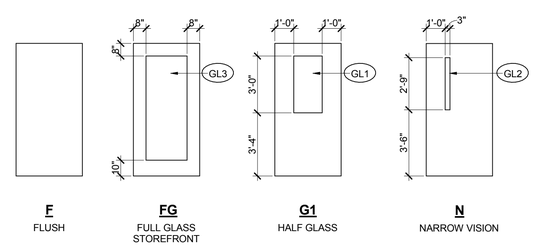

A2 DOOR TYPES
1/4" = 1'-0"

GENERAL NOTES

1. SEE FLOOR PLANS FOR DOOR SYMBOL REFERENCES.

2. REFER TO SHEET A-611 FOR DOOR FRAME DETAILS.

3. DOOR OPENING LOCATIONS:

   A. IMMEDIATELY ADJACENT TO A FLANKING WALL (6" TYP INCLUDING DOOR FRAME) U.N.O.
   B. AT THE CENTERLINE OF ROOM, U.N.O.
   C. DOOR OPENINGS IN OTHER LOCATIONS ARE LOCATED BY DIMENSIONS.

4. SEE SPECIFICATIONS FOR HARDWARE SCHEDULE.

5. ALL DOOR/ WINDOW FRAMES ARE WELDED FRAMES, U.N.O.

6. GLASS:
   A. INTERIOR DOOR/ WINDOW:
      1. CLEAR FLOAT GLASS (GL-1)
   B. EXTERIOR DOOR/ WINDOW:
      1. LOW E, CLEAR, INSULATING GLASS (GL-2)
      2. SAFETY GLAZING AT ALL FULL GLASS DOORS AND SIDELIGHTS (GL-3).

7. ALL EXTERIOR DOORS SHALL HAVE METAL THRESHOLDS, SEE HARDWARE SCHEDULE.

8. SEE SPECIFICATIONS FOR VISION PANELS.

9. ALL SOLID CORE WOOD DOORS TO BE STAIN GRADE, U.N.O.

10. REFER TO SPEC SECTION 09 06 00 COLOR SCHEDULE FOR HOLLOW METAL DOOR AND FRAME PAINT COLOR.

SCHEDULE NOTES

1. AUTOMATIC SWINGING LOW ENERGY DOOR
2. CIPHER LOCK (INSTALLED ON DOOR. IOCATION OF SUMBOL ON FLOOR PLAN INDICATES THE SIDE OF THE DOOR ON WHICH THE LOCK IS INSTALLED.
3. UNEVEN PAIR DOOR
4. 180 DEGREE SWING
5. REMOTE RELEASE
6. KEYPAD

ABBREVIATIONS

ALUM	ALUMINUM
ANOD	ANODIZED
GT	GLASS TYPE
HM	HOLLOW METAL
PNT	PAINT
RM	ROOM
STN	STAIN
WD	WOOD

SYM	DESCRIPTION	DATE
	FINAL CORRECTED SET	03/26/14
	100% FINAL DESIGN SUBMISSION	02/14/14
	65% VE SUBMISSION	11/25/13
	65% SUBMISSION	04/26/13

NAVFAC

COMMONWEALTH OF VIRGINIA
PAUL G. HEFLIN
012267
3/26/2014
ARCHITECT

HDR
ARCHITECTURE | ENGINEERING & CONSULTING
1101 KING STREET
SUITE 400
ALEXANDRIA, VIRGINIA 22314
703-518-8500

APPROVED
FOR COMMANDER NAVFAC
ACTIVITY
SATISFACTORY TO DATE
DES SW DRW GW CHK HE
PM/DM CHEMENJU/HILL
BRANCH MANAGER N/A
CHIEF ENG/ARCH TOM COX

DEPARTMENT OF THE NAVY
NAVAL FACILITIES ENGINEERING COMMAND
ATLANTIC
NAVAL FACILITIES ENGINEERING COMMAND ~ NAVFAC WASHINGTON
Walter Reed National Military Medical Center - Bethesda, Maryland
NSA/Bethesda
BETHESDA, MD
P125 - TEMPORARY MEDICAL FACILITIES
PACKAGE 2 - CLINIC BUILDING
ARCHITECTURAL - DOOR SCHEDULE, DOOR AND WINDOW TYPES

SCALE: As indicated
EPROJECT NO.: 1151333
CONSTR. CONTR. NO. N62470-09-D-9044
NAVFAC DRAWING NO. 13065851
SHEET OF 0
A-605

3/19/2014 3:30:11 PM
C:\vrt\191274-A-F2-CENTRAL_gpwhite.rvt

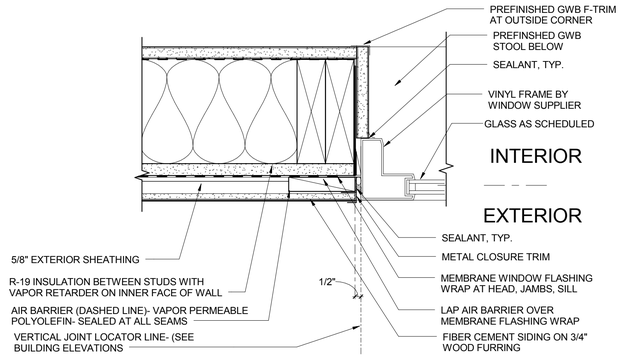

C1 EXTERIOR WINDOW JAMB
A-310 A-611 3" = 1'-0"

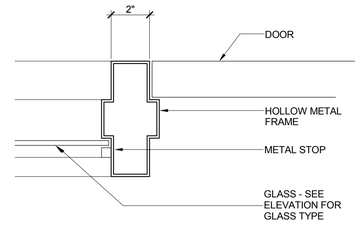

D2 MULLION DOOR TO GLASS
A-611 3" = 1'-0"

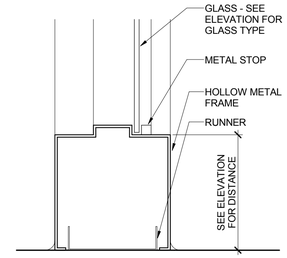

D3 BORROWED LITE SILL
A-611 3" = 1'-0"

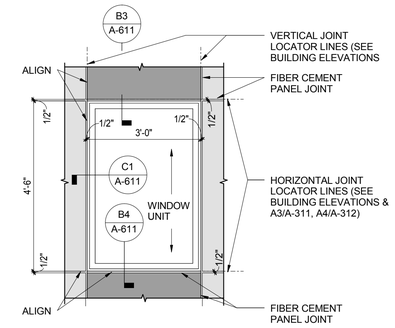

D4 WINDOW JOINT SIGHTLINES
A-201 A-611 1/2" = 1'-0"

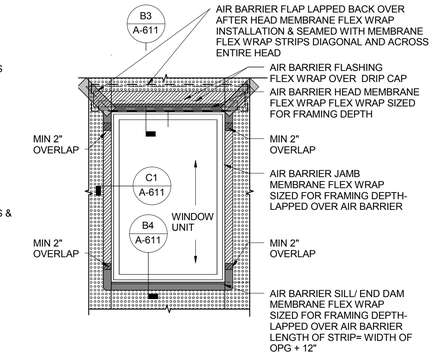

D5 WINDOW FLASHING MEMBRANE DIAGRAM
A-201 A-611 1/2" = 1'-0"

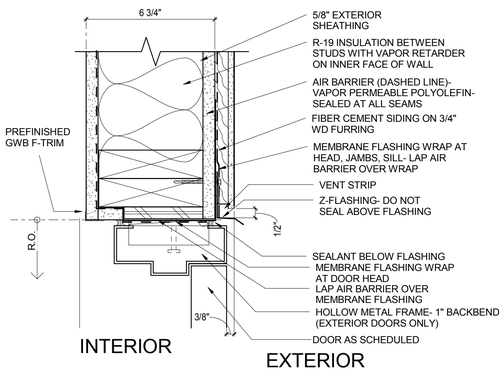

B1 EXT HM HEAD
A-611 3" = 1'-0"

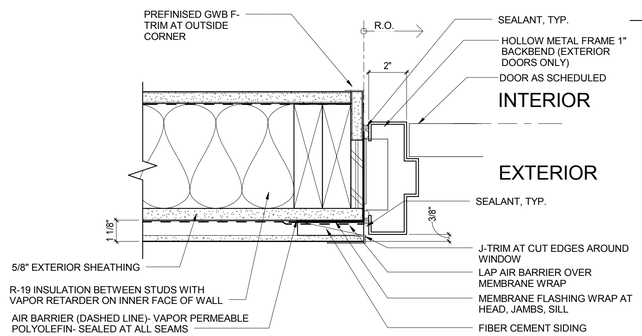

B2 EXT HM JAMB
A-611 3" = 1'-0"

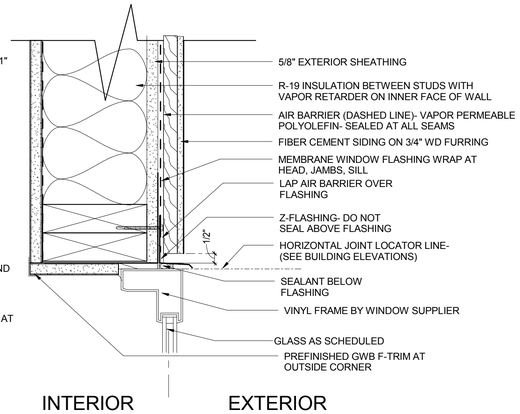

B3 EXTERIOR WINDOW HEAD
A-310 A-611 3" = 1'-0"

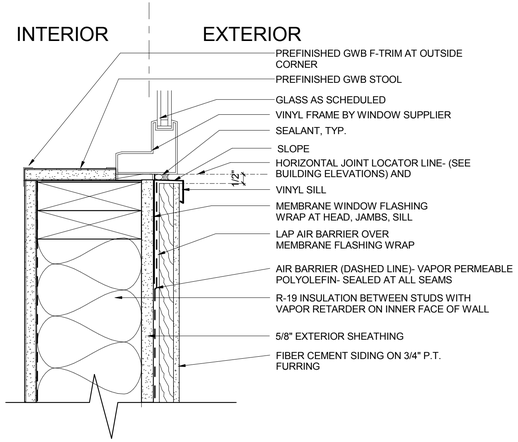

B4 EXTERIOR WINDOW SILL
A-310 A-611 3" = 1'-0"

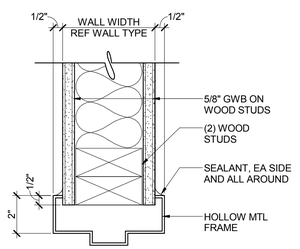

A1 HM HEAD
A-611 3" = 1'-0"

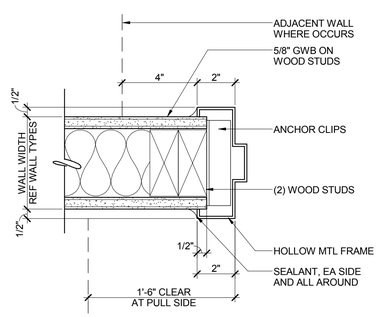

A2 HM JAMB
A-611 3" = 1'-0"

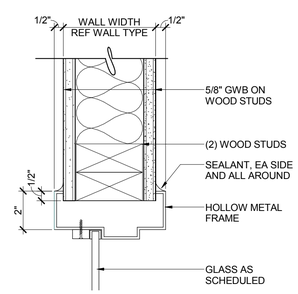

A3 HM HEAD WITH GLASS
A-611 3" = 1'-0"

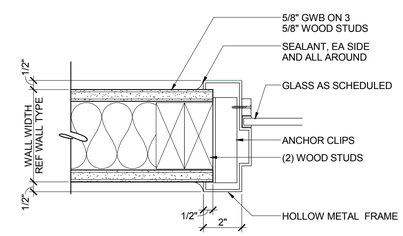

A4 HM JAMB WITH GLASS
A-611 3" = 1'-0"

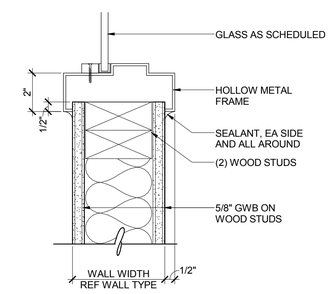

A5 HM SILL WITH GLASS
A-611 3" = 1'-0"

SYM	DESCRIPTION	DATE
	FINAL CORRECTED SET	03/26/14
	100% FINAL DESIGN SUBMISSION	02/14/14
	65% VE SUBMISSION	11/25/13
	65% SUBMISSION	04/26/13

NAVFAC

COMMONWEALTH OF VIRGINIA
PAUL G. HEFLIN
012267
3/26/2014
ARCHITECT

HDR
ARCHITECTURE | ENGINEERING & CONSULTING
1101 KING STREET
SUITE 400
ALEXANDRIA, VIRGINIA 22314
703-518-8500

APPROVED
FOR COMMANDER NAVFAC
ACTIVITY
SATISFACTORY TO DATE

DES ST DRW MD/TN CHK HE
PM/DM CHEMENJU/HILL
BRANCH MANAGER N/A
CHIEF ENG/ARCH TOM COX

DEPARTMENT OF THE NAVY
NAVAL FACILITIES ENGINEERING COMMAND
ATLANTIC
NAVAL FACILITIES ENGINEERING COMMAND – NAVFAC WASHINGTON
Walter Reed National Military Medical Center - Bethesday, Maryland
NSA/Bethesda
BETHESDA, MD
P125 - TEMPORARY MEDICAL FACILITIES
PACKAGE 2 - CLINIC BUILDING
ARCHITECTURAL - DOOR AND WINDOW FRAME DETAILS

SCALE: As indicated
EPROJECT NO.: 1151333
CONSTR. CONTR. NO.: N62470-09-D-9044
NAVFAC DRAWING NO.: 13065852
SHEET A-611 OF 0

C:\ve\191274-A-F2-CENTRAL_gowhite.rvt 3/19/2014 3:30:17 PM

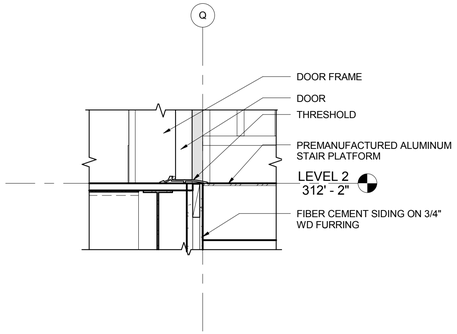

C1 A-404 A-612 DOOR SILL AT ROOFTOP STAIR
1 1/2" = 1'-0"

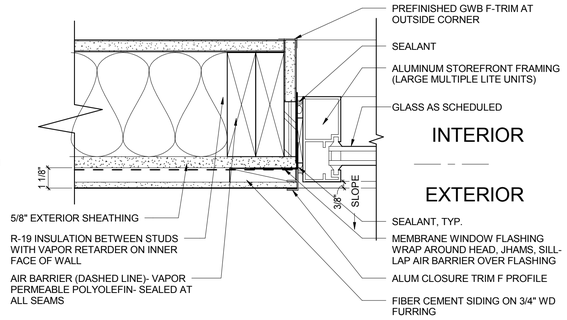

C2 A-310 A-612 EXTERIOR WINDOW STOREFRONT JAMB FRONT DOOR ONLY
3" = 1'-0"

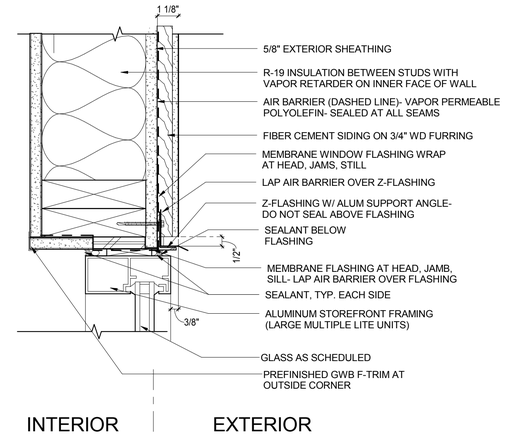

C3 A-612 EXTERIOR WINDOW STOREFRONT HEAD FRONT DOOR
3" = 1'-0"

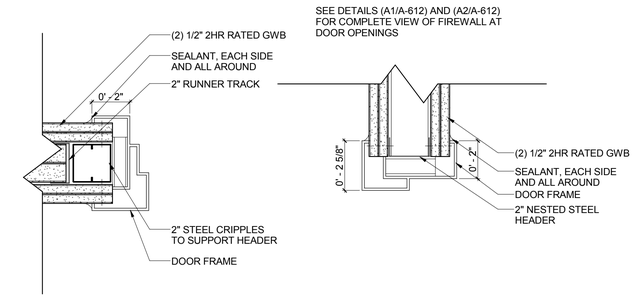

C4 A-612 DUAL EGRESS DOOR HEAD AND JAMB @ FIREWALL
3" = 1'-0"

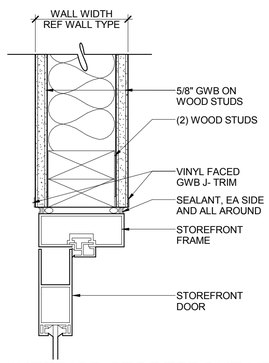

B1 A-612 INTERIOR STOREFRONT HEAD
3" = 1'-0"

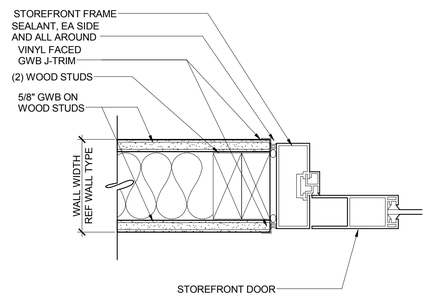

B2 A-612 INTERIOR STOREFRONT JAMB
3" = 1'-0"

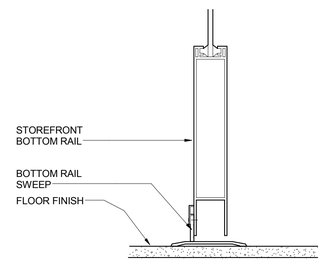

B3 A-612 INTERIOR STOREFRONT BOTTOM RAIL
3" = 1'-0"

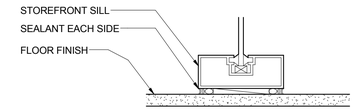

B4 A-612 INTERIOR STOREFRONT SILL
3" = 1'-0"

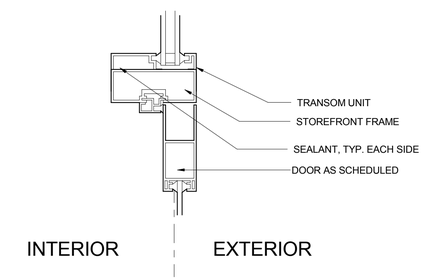

B5 A-612 EXTERIOR STOREFRONT MIDRAIL- FRONT DOOR
3" = 1'-0"

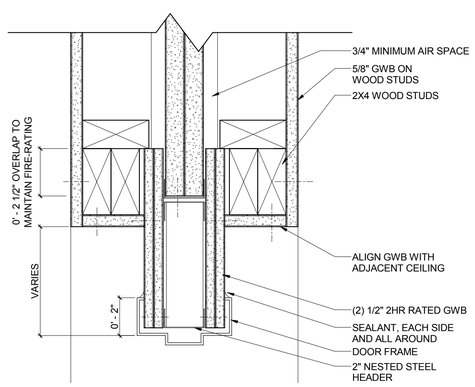

A1 A-612 DOOR HEAD @ FIREWALL
3" = 1'-0"

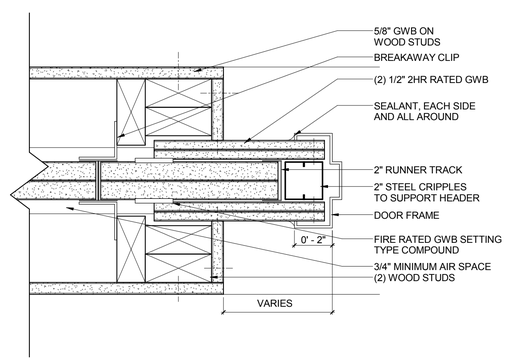

A2 A-612 DOOR JAMB @ FIREWALL
3" = 1'-0"

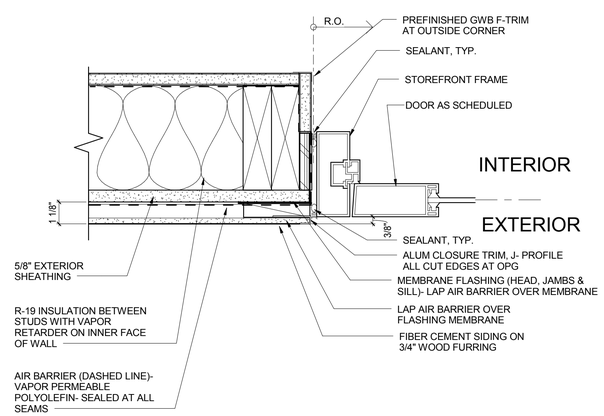

A3 A-612 EXTERIOR STOREFRONT JAMB- FRONT DOOR
3" = 1'-0"

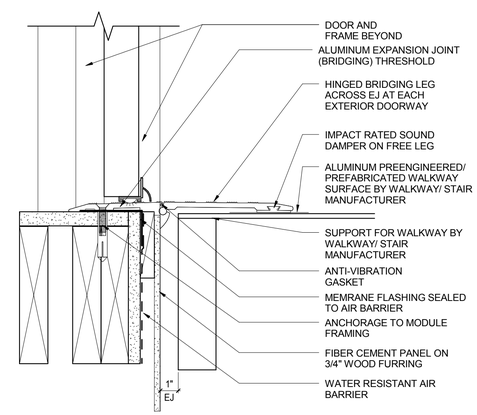

A4 A-612 EXT DOOR SILL
3" = 1'-0"

SYM	DESCRIPTION	DATE
	FINAL CORRECTED SET	03/26/14
	100% FINAL DESIGN SUBMISSION	02/14/14
	65% VE SUBMISSION	11/25/13
	65% SUBMISSION	04/26/13

NAVFAC

COMMONWEALTH OF VIRGINIA
PAUL G. HEFLIN
012267
3/26/2014
ARCHITECT

HDR
ARCHITECTURE | ENGINEERING & CONSULTING
1101 KING STREET
SUITE 400
ALEXANDRIA, VIRGINIA 22314
703-518-8500

APPROVED
FOR COMMANDER NAVFAC
ACTIVITY
SATISFACTORY TO DATE

DES SW DRW GW/TN CHK HE
PM/DM CHEMENJU/HILL
BRANCH MANAGER N/A
CHIEF ENG/ARCH TOM COX

DEPARTMENT OF THE NAVY
NAVAL FACILITIES ENGINEERING COMMAND
ATLANTIC
NAVAL FACILITIES ENGINEERING COMMAND – NAVFAC WASHINGTON
Walter Reed National Military Medical Center - Bethesda, Maryland
NSA/Bethesda
BETHESDA, MD
P125 - TEMPORARY MEDICAL FACILITIES
PACKAGE 2 - CLINIC BUILDING
ARCHITECTURAL - DOOR AND WINDOW FRAME DETAILS

SCALE: As indicated
EPROJECT NO.: 1151333
CONSTR. CONTR. NO. N62470-09-D-9044
NAVFAC DRAWING NO. 13065853
SHEET A-612 OF 0

C:\vrt\191274-A-F2-CENTRAL_gowhite.rvt 3/19/2014 3:30:21 PM

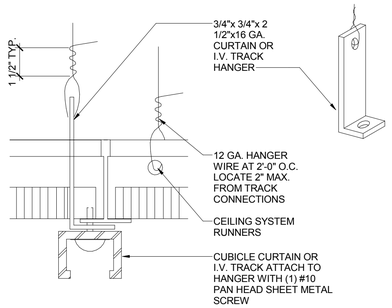

C1 AI-501 CUBICLE CURTAIN TRACK DETAIL
3" = 1'-0"

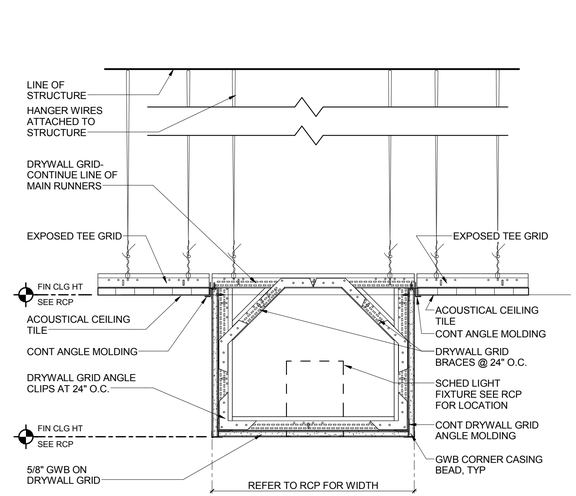

C3 AC-101-A AI-501 FRAMED SOFFIT DETAIL- DOUBLE SIDED
1 1/2" = 1'-0"

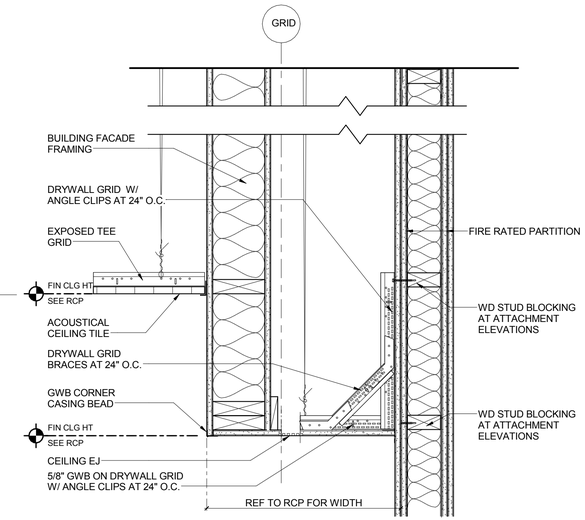

C4 A-510 AI-501 FRAMED SOFFIT DETAIL- CEILING EJ-ELEVATOR
1 1/2" = 1'-0"

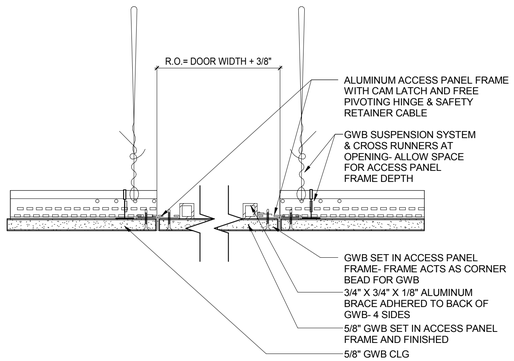

B1 AC-101-A AI-501 CEILING FLUSH ACCESS PANEL
3" = 1'-0"

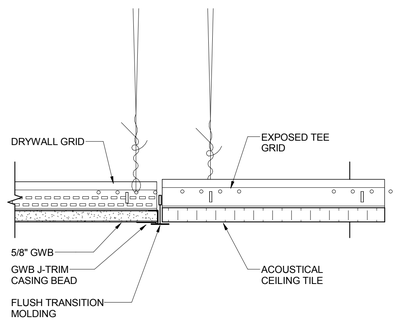

B2 AC-101-A AI-501 GWB TO ACT TRANSITION MOLDING DETAIL
3" = 1'-0"

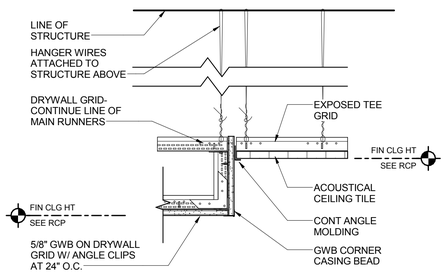

B3 AC-101-A AI-501 GWB TO ACT SOFFIT TRANSITION DETAIL
1 1/2" = 1'-0"

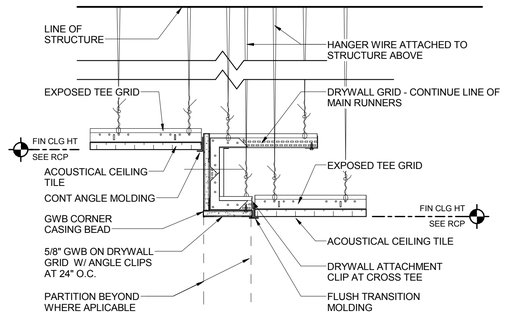

B4 AC-101-A AI-501 GWB BULKHEAD / ACT TRANSITION DETAIL
1 1/2" = 1'-0"

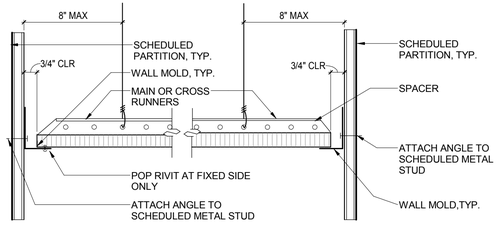

A1 AI-501 TYPICAL ACT @ PERIMETER WALL
3" = 1'-0"

SYM	DESCRIPTION	DATE
	FINAL CORRECTED SET	03/26/14
	100% FINAL DESIGN SUBMISSION	02/14/14
	65% VE SUBMISSION	11/25/13
	65% SUBMISSION	04/26/13

NAVFAC

COMMONWEALTH OF VIRGINIA
PAUL G. HEFLIN
012267
3/26/2014
ARCHITECT

HDR
ARCHITECTURE | ENGINEERING & CONSULTING
1101 KING STREET
SUITE 400
ALEXANDRIA, VIRGINIA 22314
703-518-8500

APPROVED
FOR COMMANDER NAVFAC
ACTIVITY
SATISFACTORY TO DATE

DES	ST	DRW	ST	CHK	HE
PM/DM	CHEMENJU/HILL				
BRANCH MANAGER	N/A				
CHIEF ENG/ARCH	TOM COX				

DEPARTMENT OF THE NAVY
NAVAL FACILITIES ENGINEERING COMMAND
ATLANTIC
NSA/Bethesda

NAVAL FACILITIES ENGINEERING COMMAND – NAVFAC WASHINGTON
Walter Reed National Military Medical Center - Bethesda, Maryland

BETHESDA, MD
P125 - TEMPORARY MEDICAL FACILITIES
PACKAGE 2 - CLINIC BUILDING

ARCHITECTURAL - CEILING DETAILS

SCALE: As indicated
EPROJECT NO.: 1151333
CONSTR. CONTR. NO. N62470-09-D-9044
NAVFAC DRAWING NO. 13065854
SHEET AI-501 OF 0

C:\vrt\191274-A-F2-CENTRAL_gbaird.vrt 3/19/2014 6:56:22 PM

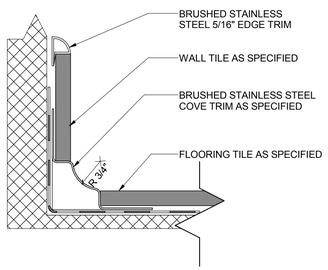

B1 PORCELAIN FLOOR TILE TO PORCELAIN TILE BASE AND EDGE TRIM
AI-510 6" = 1'-0"
0 1" 2" 4"

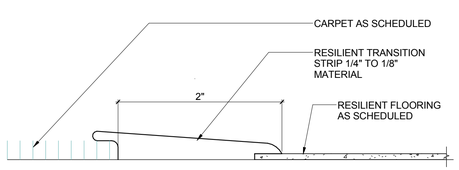

A1 RESILIENT FLOORING TO CARPET
AI-510 12" = 1'-0"

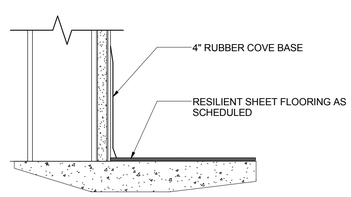

A2 RESILIENT FLOORING @ BASE
AI-510 3" = 1'-0"
0 3" 6" 9"

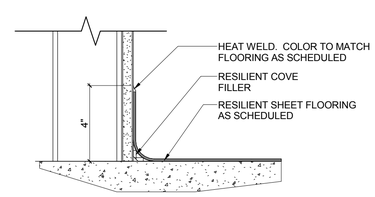

A3 INTEGRAL RESILIENT COVE BASE
AI-510 3" = 1'-0"
0 3" 6" 9"

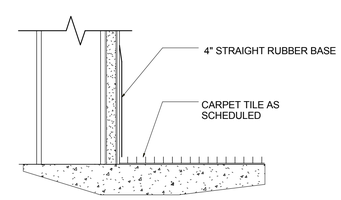

A4 CARPET @ BASE
AI-510 3" = 1'-0"
0 3" 6" 9"

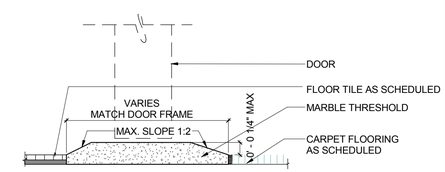

A5 MARBLE THRESHOLD DETAIL
AI-510 6" = 1'-0"
0 1" 2" 4"

SYM	DESCRIPTION	DATE
	FINAL CORRECTED SET	03/26/14
	100% FINAL DESIGN SUBMISSION	02/14/14
	65% VE SUBMISSION	11/25/13
	65% SUBMISSION	04/26/13
	35% SUBMISSION	03/08/13

NAVFAC

COMMONWEALTH OF VIRGINIA
PAUL G. HEFLIN
012267
3/26/2014
ARCHITECT

HDR
ARCHITECTURE | ENGINEERING & CONSULTING
1101 KING STREET
SUITE 400
ALEXANDRIA, VIRGINIA 22314
703-518-8500

APPROVED
FOR COMMANDER NAVFAC
ACTIVITY
SATISFACTORY TO DATE

DES	PP	DRW	PP	CHK	HE
PM/DM	CHEMENJU/HILL				
BRANCH MANAGER	N/A				
CHIEF ENG/ARCH	TOM COX				

DEPARTMENT OF THE NAVY
NAVAL FACILITIES ENGINEERING COMMAND
NAVAL FACILITIES ENGINEERING COMMAND ~ NAVFAC WASHINGTON
ATLANTIC
Walter Reed National Military Medical Center - Bethesday, Maryland
NSA/Bethesda
BETHESDA, MD
P125 - TEMPORARY MEDICAL FACILITIES
PACKAGE 2 - CLINIC BUILDING
ARCHITECTURAL - FLOOR AND WALL FINISH DETAILS

SCALE: As indicated
EPROJECT NO.: 1151333
CONSTR. CONTR. NO.: N62470-09-D-9044
NAVFAC DRAWING NO.: 13065855
SHEET OF 0
AI-510

C:\svt\191274-A-F2-CENTRAL_gowhite.rvt 3/19/2014 3:30:56 PM

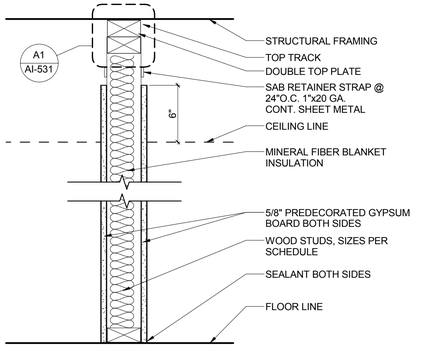

MARK	STUD SIZE	FIRE RESISTANCE		SOUND ATTENUATION		
		FIRE RATING	TEST	SAB	STC	TEST
A	2 X 4		-	3 "	-	-

NON-FIRE RATED WALL — A
NTS

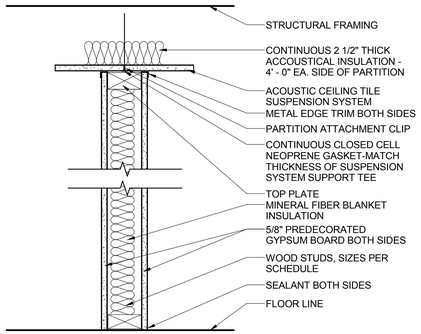

MARK	STUD SIZE	FIRE RESISTANCE		SOUND ATTENUATION		
		FIRE RATING	TEST	SAB	STC	TEST
AC	2 X 4		-	3 "	39	NGC 2385

NON-FIRE RATED WALL — AC
NTS

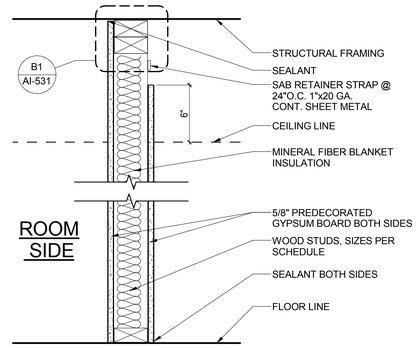

MARK	STUD SIZE	FIRE RESISTANCE		SOUND ATTENUATION		
		FIRE RATING	TEST	SAB	STC	TEST
AS	2 X 4		-	3 "	41	-

NON-FIRE RATED, SMOKE TIGHT WALL — AS
NTS

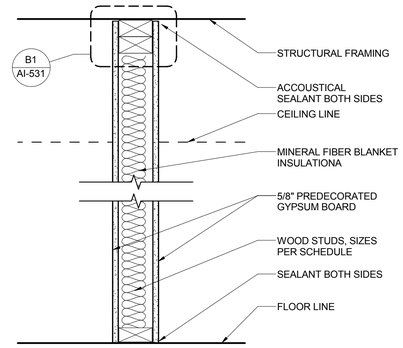

MARK	STUD SIZE	FIRE RESISTANCE		SOUND ATTENUATION		
		FIRE RATING	TEST	SAB	STC	TEST
B	2 X 4		-	3"	46	BBN-700725

NON-FIRE RATED WALL — B
NTS

SHEET NOTES: WALL TYPE GENERAL NOTES

1. SEE FLOOR PLANS FOR EXTENT OF EACH WALL TYPE. SOME WALL TYPES MAY NOT BE USED ON PROJECT.

2. WALL TYPES ARE TITLED TO GENERALLY DESCRIBE AN ASSEMBLY'S FIRE-RESISTIVE "CAPABILITY". IN SOME CASES, ARCHITECT MAY HAVE EMPLOYED A GIVEN WALL TYPE FOR ITS SOUND CONTROL OR OTHER PROPERTIES. THUS IT IS POSSIBLE THAT WALL TYPES CHOSEN MAY PROVIDE GREATER FR CAPABILITY THAN ACTUALLY REQUIRED BY BUILDING CODE. UTILIZE WALL TYPES INDICATED BY FLOOR PLAN CALL-OUTS.

3. PROVIDE UL DESIGN TEST FOR FIRE-RATED WALL INDICATED ON THIS DRAWING OR EQUIVALENT FIRE-TESTED DESIGN.

4. SEE FLOOR PLAN GENERAL NOTES FOR TYPICAL PARTITION TYPE. CONTACT ARCHITECT WHERE CONFLICTS OCCUR WITH LIFE SAFETY OR OTHER COORDINATING DISCIPLINES.

5. "WOOD STUDS" INDICATED ON THIS SHEET FOR INTERIOR PARTITIONS AND FOR ADDITIONAL CRITERIA SUCH AS STUD SPACING, REFER TO SPECIFICATIONS.

6. "STC" REFERS TO SOUND TRANSMISSION CLASS; A RATING SYSTEM THAT DESCRIBES THE ABILITY OF AN ASSEMBLY TO REDUCE THE TRANSMISSION OF SOUND. CONFIGURE SOUND-RATED WALL ASSEMBLIES ACCORDING TO THE MINIMUM REQUIREMENTS STIPULATED IN THE STC TESTS LISTED.

7. "SAB" REFERS TO SOUND ATTENUATION BATTS. WHERE SAB ARE INDICATED, THEY SHALL EXTEND CONTINUOUSLY FROM FLOOR TO STRUCTURE ABOVE.

8. WALLS ARE INDICATED WITH CONVENTIONAL GYPSUM WALLBOARD; UPGRADE TO PREMIUM TYPES OF WALLBOARD (I.E. MOISTURE-RESISTANT, TILE-BACKER, ETC) BASED ON THEIR LOCATION AND ACCORDING TO REQUIREMENTS AS INDICATED IN SPECIFACTIONS.

9. HEAD-OF-WALL FIRESTOPPING AND SEALING OF THRU-WALL PENETRATIONS; REFER TO SPECIFICATIONS.

10. ACOUSTICAL SEALANTS: SPECIFIED IN SPECIFACTIONS.

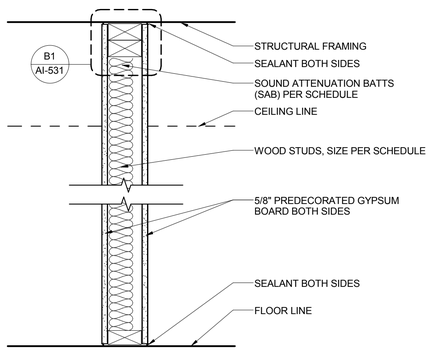

MARK	STUD SIZE	FIRE RESISTANCE		SOUND ATTENUATION		
		FIRE RATING	TEST	SAB	STC	TEST
BS	2 X 4		-	3"	46	BBN-700725

NON-FIRE RATED, SMOKE TIGHT WALL — BS
NTS

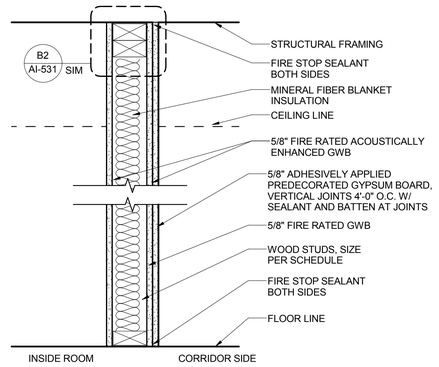

MARK	STUD SIZE	FIRE RESISTANCE		SOUND ATTENUATION		
		FIRE RATING	TEST	SAB	STC	TEST
C	2 X 4	1 HR	U309	-	-	-

1-HOUR WALL — C
NTS

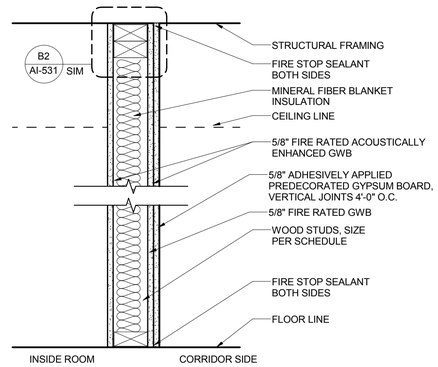

MARK	STUD SIZE	FIRE RESISTANCE		SOUND ATTENUATION		
		FIRE RATING	TEST	SAB	STC	TEST
CS	2 X 4	1 HR	U309	-	-	-

1-HOUR WALL- SMOKE TIGHT — CS
NTS

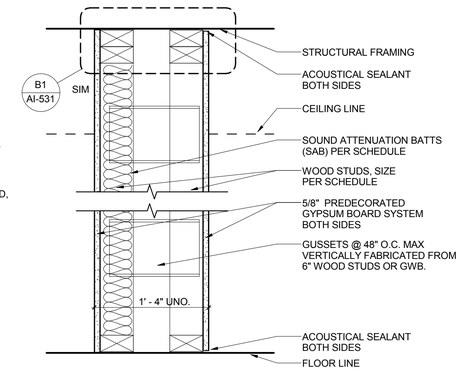

MARK	STUD SIZE	FIRE RESISTANCE		SOUND ATTENUATION		
		FIRE RATING	TEST	SAB	STC	TEST
G	2 X 4			3 "	52	RAL-TL-76-155

NON-FIRE RATED CHASE (SINGLE FIXTURES) — G
NTS

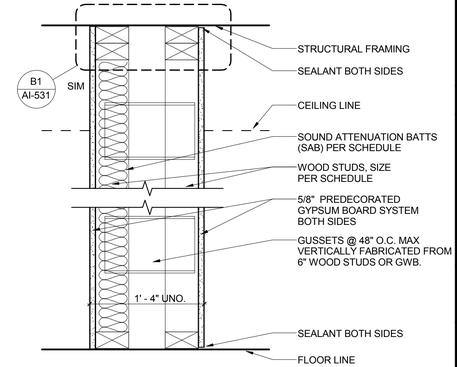

MARK	STUD SIZE	FIRE RESISTANCE		SOUND ATTENUATION		
		FIRE RATING	TEST	SAB	STC	TEST
GS	2 X 4			3 "	52	RAL-TL-76-155

NON-FIRE RATED, SMOKE TIGHT CHASE (SINGLE FIXTURES) — GS
NTS

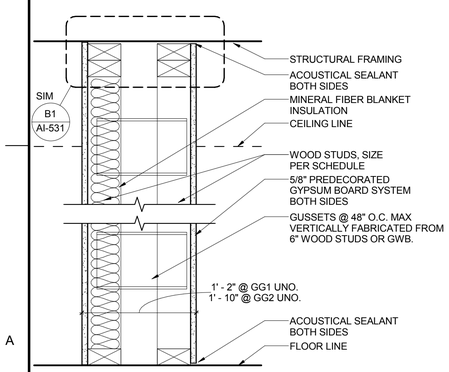

MARK	STUD SIZE	FIRE RESISTANCE		SOUND ATTENUATION		
		FIRE RATING	TEST	SAB	STC	TEST
GG1	2 X 4			3 "	52	RAL-TL-76-155
GG2	2 X 4			3 "	52	RAL-TL-76-155

NON FIRE RATED CHASE (BACK TO BACK FIXTURES) — GG
NTS

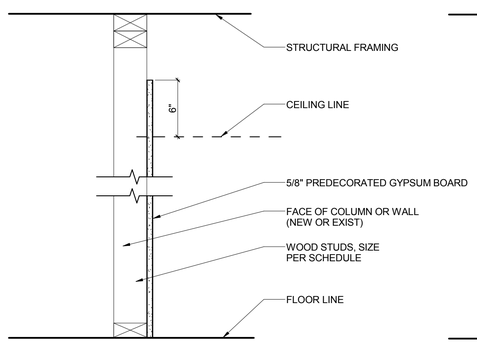

MARK	STUD SIZE	FIRE RESISTANCE		SOUND ATTENUATION		
		FIRE RATING	TEST	SAB	STC	TEST
R1	2 X 2		-	-	-	-
R2	2 X 3		-	-	-	-
R3	2 X 4		-	-	-	-

STUD FURRING — R
NTS

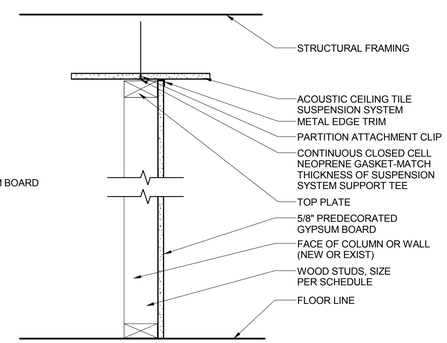

MARK	STUD SIZE	FIRE RESISTANCE		SOUND ATTENUATION		
		FIRE RATING	TEST	SAB	STC	TEST
RC1	2 X 2		-	-	-	-
RC2	2 X 3		-	-	-	-
RC3	2 X 4		-	-	-	-

STUD FURRING — RC
NTS

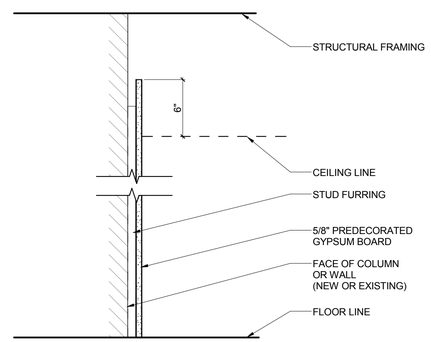

MARK	STUD SIZE	FIRE RESISTANCE		SOUND ATTENUATION		
		FIRE RATING	TEST	SAB	STC	TEST
Q	1 X 4				N/A	
Q2	1 X 4				N/A	

CHANNEL FURRING — Q
NTS

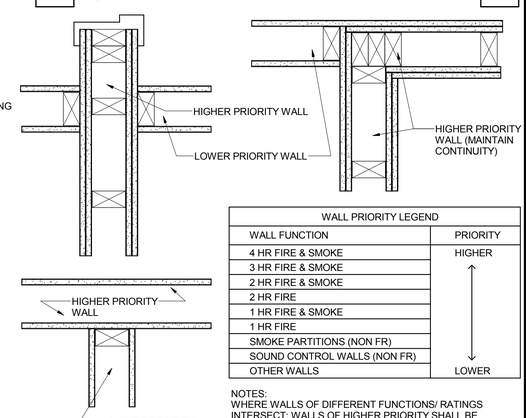

WALL PRIORITY LEGEND	
WALL FUNCTION	PRIORITY
4 HR FIRE & SMOKE	HIGHER
3 HR FIRE & SMOKE	
2 HR FIRE & SMOKE	
2 HR FIRE	
1 HR FIRE & SMOKE	
1 HR FIRE	
SMOKE PARTITIONS (NON FR)	
SOUND CONTROL WALLS (NON FR)	
OTHER WALLS	LOWER

NOTES:
WHERE WALLS OF DIFFERENT FUNCTIONS/ RATINGS INTERSECT: WALLS OF HIGHER PRIORITY SHALL BE CONTINUOUS.

LOWER PRIORITY WALLS SHALL "ABUT" AND BE "SEALED TO" HIGHER PRIORITY WALLS, BUT SHALL NOT INTERRUPT CONTINUITY OF THE HIGHER PRIORITY WALL.

WALL PRIORITY LEGEND
1 1/2" = 1'-0"

SYM	DESCRIPTION	DATE
	FINAL CORRECTED SET	03/26/14
	100% FINAL DESIGN SUBMISSION	02/14/14
	65% VE SUBMISSION	11/25/13
	65% SUBMISSION	04/26/13

NAVFAC

COMMONWEALTH OF VIRGINIA
PAUL G. HEFLIN
012267
3/26/2014
ARCHITECT

HDR
ARCHITECTURE | ENGINEERING & CONSULTING
1101 KING STREET
SUITE 400
ALEXANDRIA, VIRGINIA 22314
703-518-8500

APPROVED
FOR COMMANDER NAVFAC
ACTIVITY
SATISFACTORY TO DATE
DES SW DRW GW CHK HE
PM/DM CHEMENJU/HILL
BRANCH MANAGER N/A
CHIEF ENG/ARCH TOM COX

DEPARTMENT OF THE NAVY
NAVAL FACILITIES ENGINEERING COMMAND ATLANTIC
NAVAL FACILITIES ENGINEERING COMMAND ~ NAVFAC WASHINGTON
Walter Reed National Military Medical Center - Bethesda, Maryland
NSA/Bethesda
BETHESDA, MD
P125 - TEMPORARY MEDICAL FACILITIES
PACKAGE 2 - CLINIC BUILDING
ARCHITECTURAL - PARTITION TYPES

SCALE: As indicated
EPROJECT NO.: 1151333
CONSTR. CONTR. NO. N62470-09-D-9044
NAVFAC DRAWING NO. 13065856
SHEET AI-530 OF 0

C:\svt\191274-A-F2-CENTRAL_gpwhite.rvt 3/19/2014 3:31:09 PM

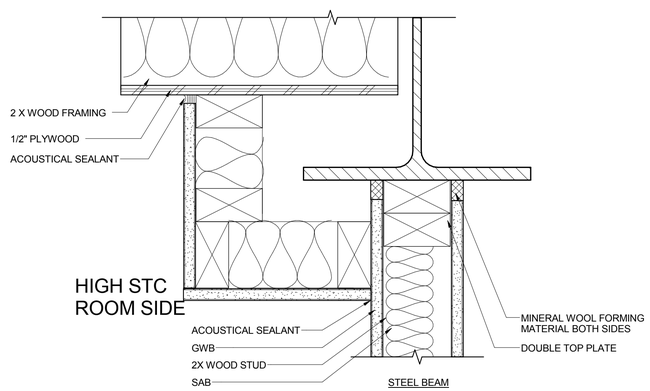

B1 HEAD-OF-WALL CONDITIONS - SMOKE PARTITIONS AND SOUND CONTROL WALLS
3" = 1'-0"

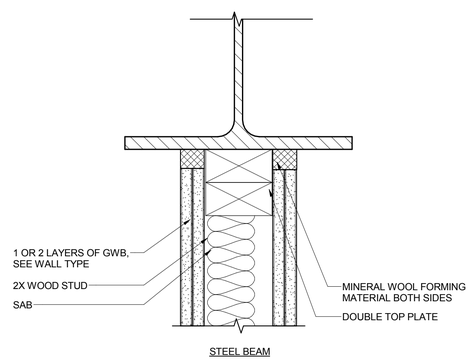

B2 HEAD-OF-WALL CONDITIONS - SMOKE PARTITIONS AND SOUND CONTROL WALLS
3" = 1'-0"

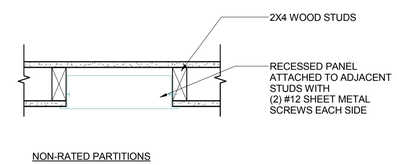

B3 FEC - DETAIL
1 1/2" = 1'-0"

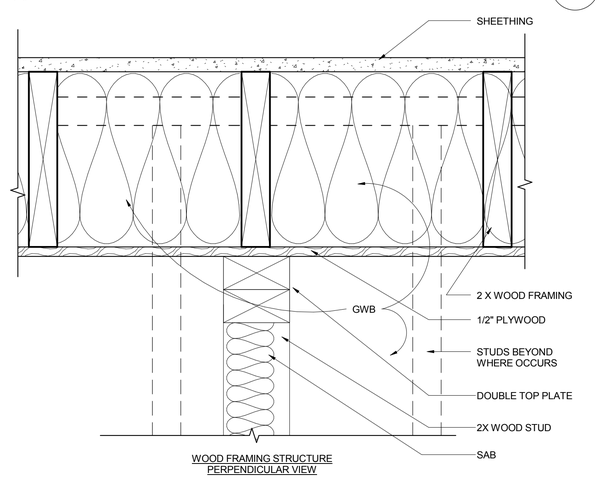

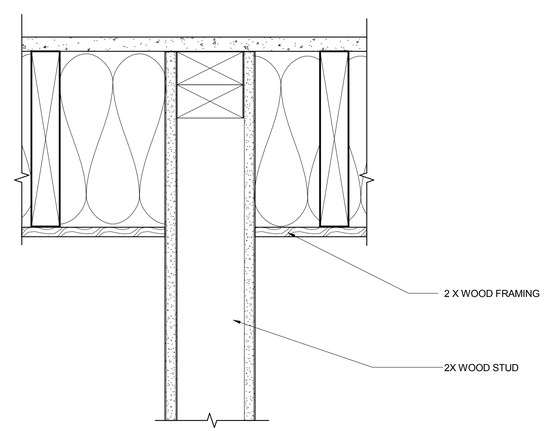

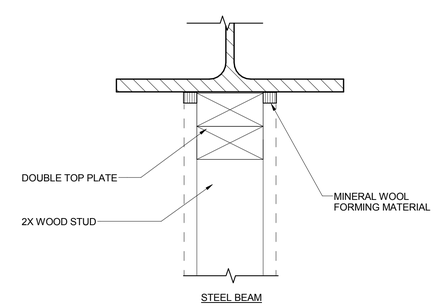

A1 HEAD-OF-WALL CONDITION - NON-SMOKE, NON-SOUND CONTROL WALL W/ GWB TO UNDERSIDE OF STRUCTURE
3" = 1'-0"

SYM	DESCRIPTION	DATE
	FINAL CORRECTED SET	03/26/14
	100% FINAL DESIGN SUBMISSION	02/14/14
	65% VE SUBMISSION	11/25/13
	65% SUBMISSION	04/26/13

NAVFAC

COMMONWEALTH OF VIRGINIA
PAUL G. HEFLIN
012267
3/26/2014
ARCHITECT

HDR
ARCHITECTURE | ENGINEERING & CONSULTING
1101 KING STREET
SUITE 400
ALEXANDRIA, VIRGINIA 22314
703-518-8500

APPROVED
FOR COMMANDER NAVFAC
ACTIVITY
SATISFACTORY TO DATE

DES	ST	DRW	MD	CHK	HE
PM/DM	CHEMENJU/HILL				
BRANCH MANAGER	N/A				
CHIEF ENG/ARCH	TOM COX				

DEPARTMENT OF THE NAVY
NAVAL FACILITIES ENGINEERING COMMAND ~ NAVFAC WASHINGTON
ATLANTIC
Walter Reed National Military Medical Center - Bethesday, Maryland
NAVAL FACILITIES ENGINEERING COMMAND
NSA/Bethesda
BETHESDA, MD
P125 - TEMPORARY MEDICAL FACILITIES
PACKAGE 2 - CLINIC BUILDING
ARCHITECTURAL - INTERIOR WALL DETAILS

SCALE: As indicated
EPROJECT NO.: 1151333
CONSTR. CONTR. NO.: N62470-09-D-9044
NAVFAC DRAWING NO.: 13065857
SHEET OF 0
AI-531

C:\nvf\191274-A-F2-CENTRAL_gowhite.rvt 3/19/2014 3:31:11 PM

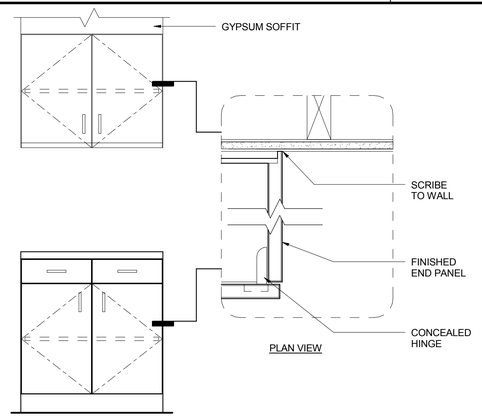

C1 TYP. END PANEL DETAIL
3" = 1'-0"

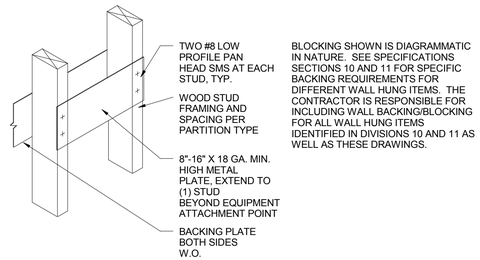

BLOCKING SHOWN IS DIAGRAMMATIC IN NATURE. SEE SPECIFICATIONS SECTIONS 10 AND 11 FOR SPECIFIC BACKING REQUIREMENTS FOR DIFFERENT WALL HUNG ITEMS. THE CONTRACTOR IS RESPONSIBLE FOR INCLUDING WALL BACKING/BLOCKING FOR ALL WALL HUNG ITEMS IDENTIFIED IN DIVISIONS 10 AND 11 AS WELL AS THESE DRAWINGS.

C2 BACKING PLATE - TYPE 2
3" = 1'-0"

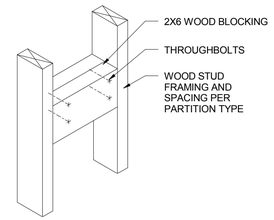

C3 BACKING PLATE - SHOWER SEAT
3" = 1'-0"

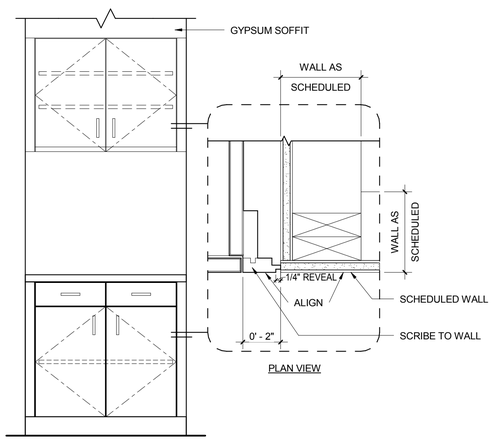

B1 TYP. FILLER PANEL DETAIL
3" = 1'-0"

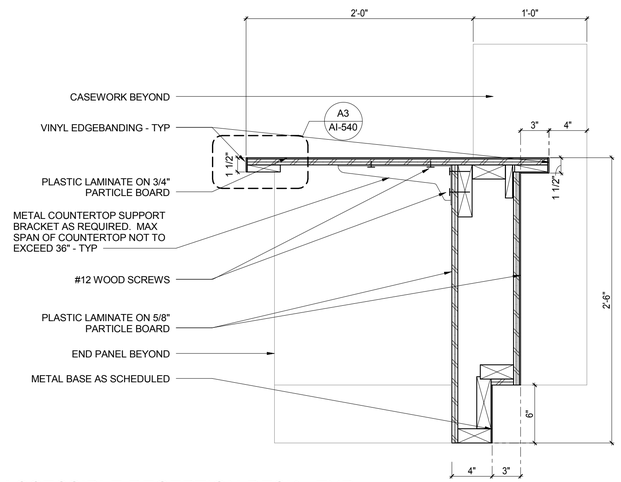

B2 ACCESSIBLE RECEPTION DESK - TYP
1 1/2" = 1'-0"

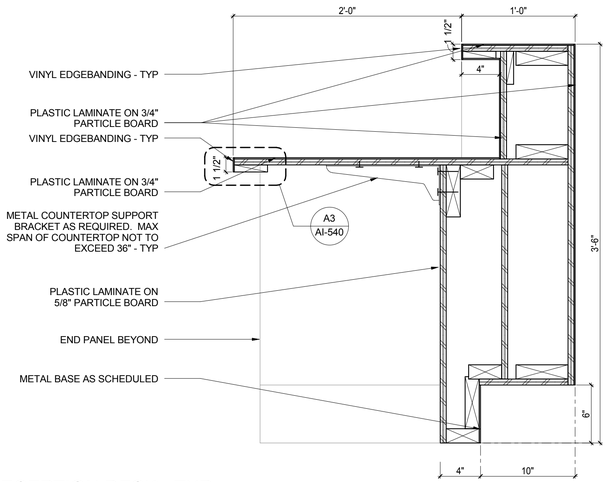

B3 RECEPTION DESK - TYP
1 1/2" = 1'-0"

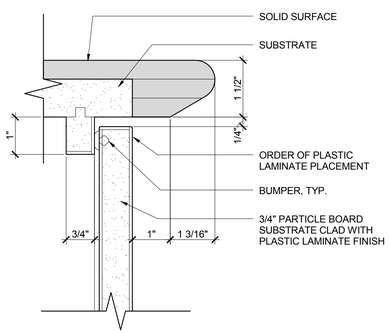

A1 TYPICAL SOLID SURFACE EDGE PROFILE
6" = 1'-0"

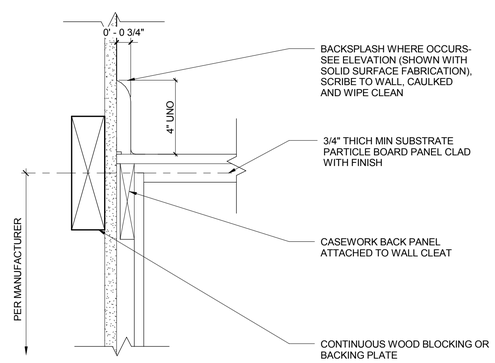

A2 ANCHORAGE AT BASE
3" = 1'-0"

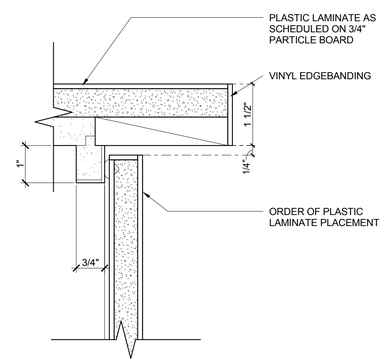

A3 TYP PLASTIC LAMINATE EDGE PROFILE
6" = 1'-0"

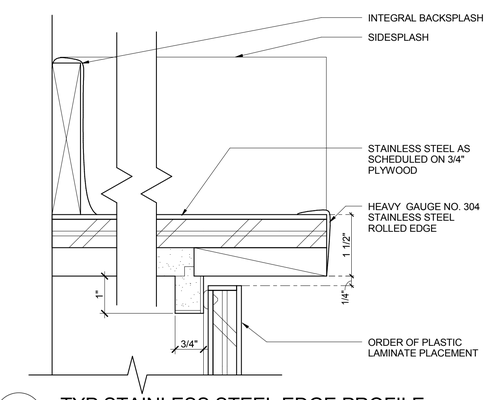

A4 TYP STAINLESS STEEL EDGE PROFILE
6" = 1'-0"

SYM	DESCRIPTION	DATE
	FINAL CORRECTED SET	03/26/14
	100% FINAL DESIGN SUBMISSION	02/14/14
	65% VE SUBMISSION	11/25/13
	65% SUBMISSION	04/26/13
	35% SUBMISSION	03/08/13

NAVFAC

COMMONWEALTH OF VIRGINIA
PAUL G. HEFLIN
012267
3/26/2014
ARCHITECT

HDR
ARCHITECTURE | ENGINEERING & CONSULTING
1101 KING STREET
SUITE 400
ALEXANDRIA, VIRGINIA 22314
703-518-8500

APPROVED
FOR COMMANDER NAVFAC
ACTIVITY
SATISFACTORY TO DATE

DES PP DRW PP CHK HE
PM/DM CHEMENJU/HILL
BRANCH MANAGER N/A
CHIEF ENG/ARCH TOM COX

DEPARTMENT OF THE NAVY
NAVAL FACILITIES ENGINEERING COMMAND ~ NAVFAC WASHINGTON
ATLANTIC
NAVAL FACILITIES ENGINEERING COMMAND
Walter Reed National Military Medical Center - Bethesda, Maryland
NSA/Bethesda
BETHESDA, MD
P125 - TEMPORARY MEDICAL FACILITIES
PACKAGE 2 - CLINIC BUILDING
ARCHITECTURAL - CASEWORK DETAILS

SCALE: As indicated
EPROJECT NO.: 1151333
CONSTR. CONTR. NO. N62470-09-D-9044
NAVFAC DRAWING NO. 13065858
SHEET OF 0
AI-540

C:\vrt\191274-A-F2-CENTRAL_gpwhite.rvt 3/19/2014 3:31:14 PM

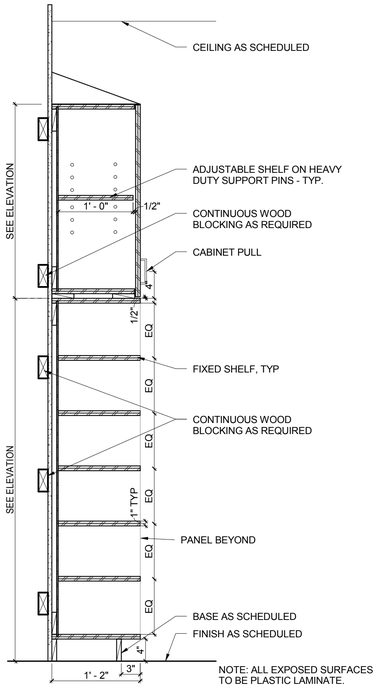

C1 CUBBIE SHELVING WITH UPPER CABINET
1" = 1'-0"

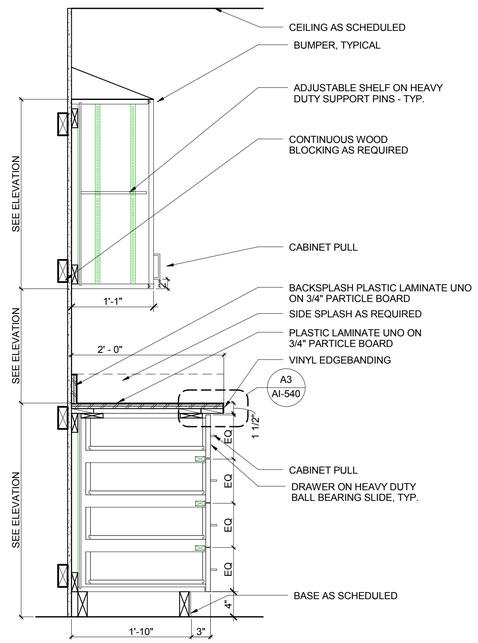

C2 4 DRAWER CASEWORK SECTION
1" = 1'-0"

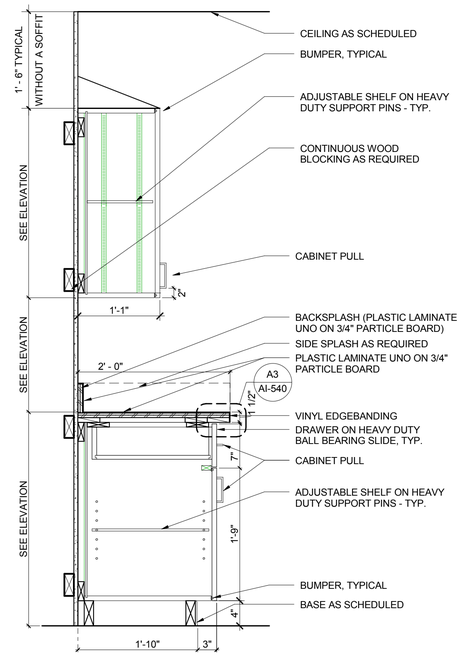

C3 1 DRAWER/1 DOOR CASEWORK SECTION
1" = 1'-0"

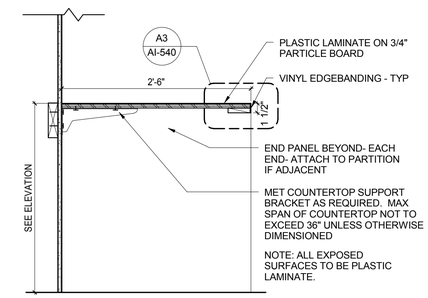

C4 CASEWORK DESKTOP SECTION- W/O OVERHEAD
1" = 1'-0"

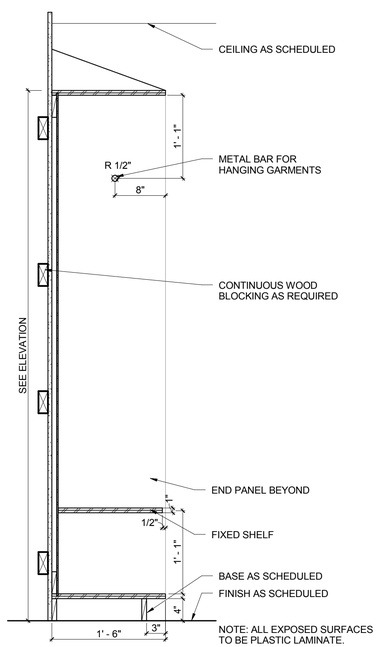

A1 VESTMENT WARDROBE
1" = 1'-0"

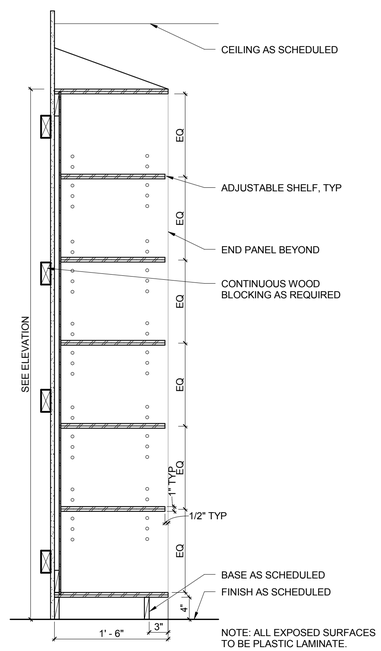

A2 VESTMENT SHELVING
1" = 1'-0"

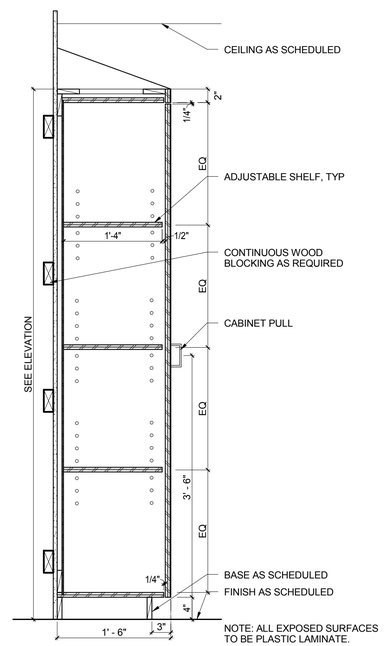

A3 STORAGE CABINET
1" = 1'-0"

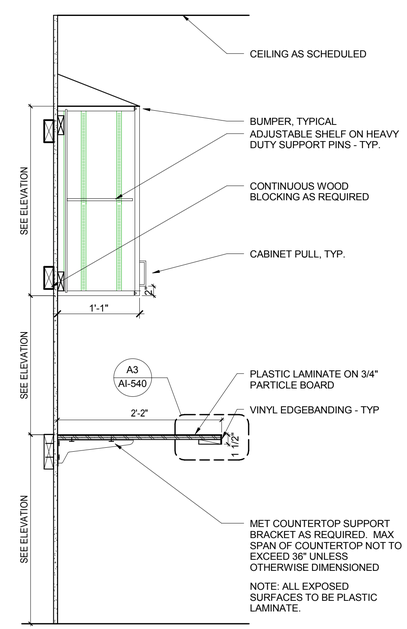

A4 CASEWORK DESKTOP SECTION
1" = 1'-0"

SYM	DESCRIPTION	DATE
	FINAL CORRECTED SET	03/26/14
	100% FINAL DESIGN SUBMISSION	02/14/14
	65% VE SUBMISSION	11/25/13
	65% SUBMISSION	04/26/13

NAVFAC

COMMONWEALTH OF VIRGINIA
PAUL G. HEFLIN
012267
3/26/2014
ARCHITECT

HDR
ARCHITECTURE | ENGINEERING & CONSULTING
1101 KING STREET
SUITE 400
ALEXANDRIA, VIRGINIA 22314
703-518-8500

APPROVED
FOR COMMANDER NAVFAC
ACTIVITY
SATISFACTORY TO DATE

DES	ST	DRW	MD	CHK	HE
PM/DM	CHEMENJU/HILL				
BRANCH MANAGER	N/A				
CHIEF ENG/ARCH	TOM COX				

DEPARTMENT OF THE NAVY
NAVAL FACILITIES ENGINEERING COMMAND ATLANTIC
NAVAL FACILITIES ENGINEERING COMMAND ~ NAVFAC WASHINGTON
Walter Reed National Military Medical Center - Bethesda, Maryland
NSA/Bethesda
BETHESDA, MD
P125 - TEMPORARY MEDICAL FACILITIES
PACKAGE 2 - CLINIC BUILDING
ARCHITECTURAL - CASEWORK DETAILS

SCALE: 1" = 1'-0"
ERPROJECT NO.: 1151333
CONSTR. CONTR. NO. N62470-09-D-9044
NAVFAC DRAWING NO. 13065859
SHEET OF 0
AI-541

C:\n61912\74-A-F2-CENTRAL_gowhite.rvt 3/19/2014 3:31:16 PM

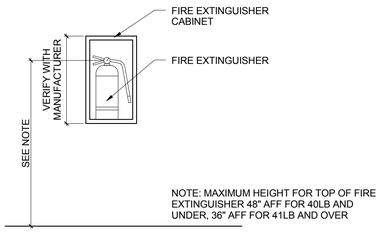

D1 FIRE EXTINGUISHER CABINET.

AI-550 1/2" = 1'-0"

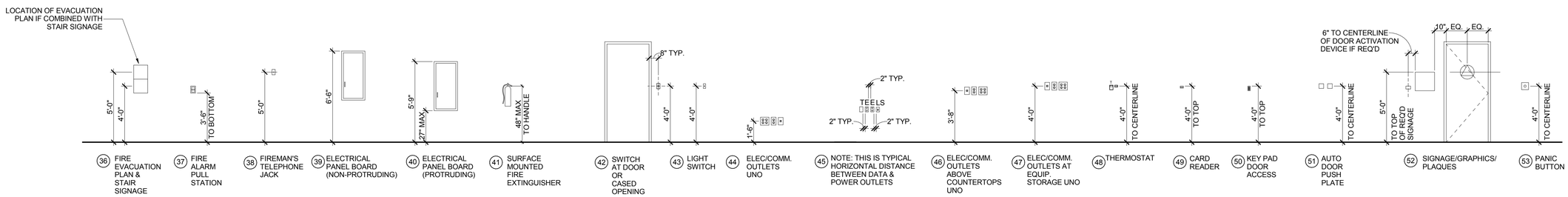

C1 TYPICAL MOUNTING HEIGHTS ..

AI-550 1/4" = 1'-0"

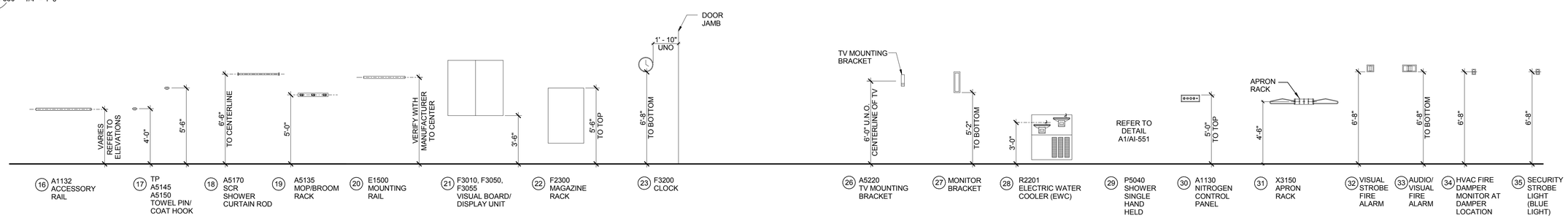

B1 TYPICAL MOUNTING HEIGHTS.

AI-550 1/4" = 1'-0"

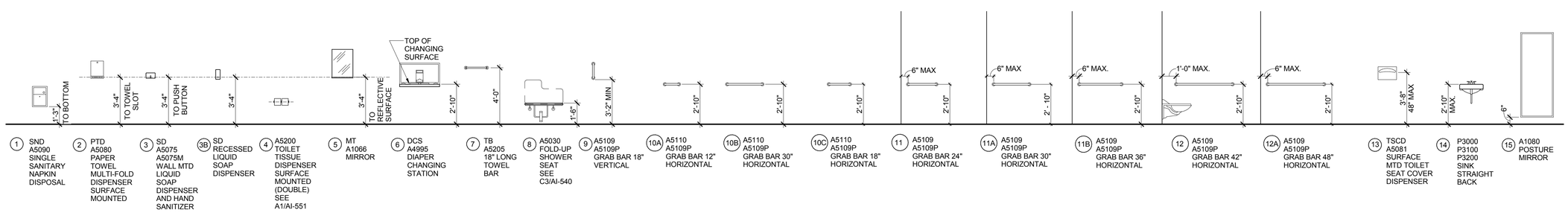

A1 TYPICAL TOILET ACCESSORY MOUNTING HEIGHTS.

AI-550 1/4" = 1'-0"

SYM	DESCRIPTION	DATE
	FINAL CORRECTED SET	03/26/14
	100% FINAL DESIGN SUBMISSION	02/14/14
	65% VE SUBMISSION	11/25/13
	65% SUBMISSION	04/26/13

NAVFAC

COMMONWEALTH OF VIRGINIA
PAUL G. HEFLIN
012267
3/26/2014
ARCHITECT

HDR

ARCHITECTURE | ENGINEERING & CONSULTING
1101 KING STREET
SUITE 400
ALEXANDRIA, VIRGINIA 22314
703-518-8500

APPROVED

FOR COMMANDER NAVFAC

ACTIVITY

SATISFACTORY TO DATE

DES ST DRW MD CHK HE
PM/DM CHEMENJU/HILL
BRANCH MANAGER N/A
CHIEF ENG/ARCH TOM COX

DEPARTMENT OF THE NAVY
NAVAL FACILITIES ENGINEERING COMMAND
ATLANTIC

NAVAL FACILITIES ENGINEERING COMMAND ~ NAVFAC WASHINGTON
Walter Reed National Military Medical Center - Bethesda, Maryland

NSA/Bethesda

BETHESDA, MD

P125 - TEMPORARY MEDICAL FACILITIES
PACKAGE 2 - CLINIC BUILDING

ARCHITECTURAL - MOUNTING HEIGHTS

SCALE: As indicated
EPROJECT NO.: 1151333
CONSTR. CONTR. NO. N62470-09-D-9044
NAVFAC DRAWING NO. 13065860
SHEET OF 0

AI-550

C:\vk19\274-A-F2-CENTRAL_gowhite.xrf 3/19/2014 3:31:19 PM

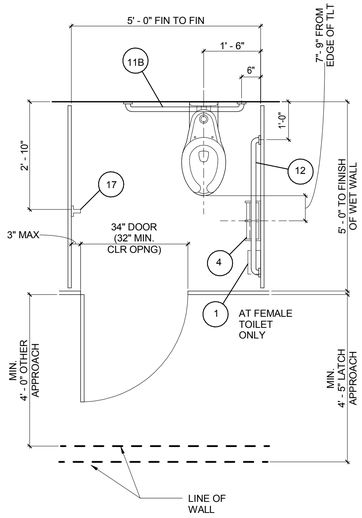

ACCESSIBLE STALL

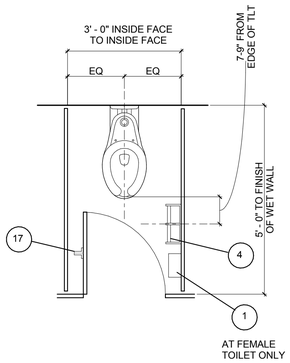

STANDARD STALL

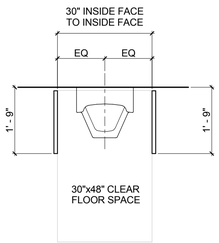

STANDARD URINAL

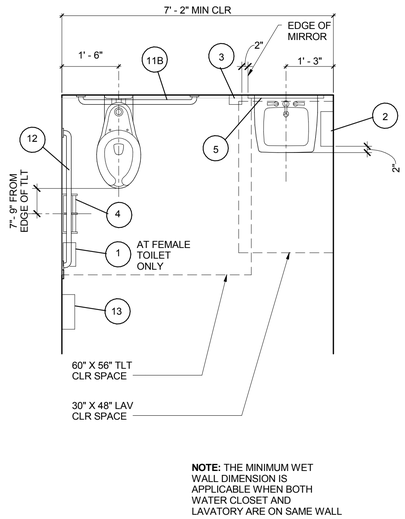

NOTE: THE MINIMUM WET WALL DIMENSION IS APPLICABLE WHEN BOTH WATER CLOSET AND LAVATORY ARE ON SAME WALL

MINIMUM TOILET DIMENSION

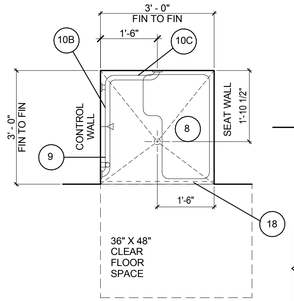

ACCESSIBLE TRANSFER SHOWER

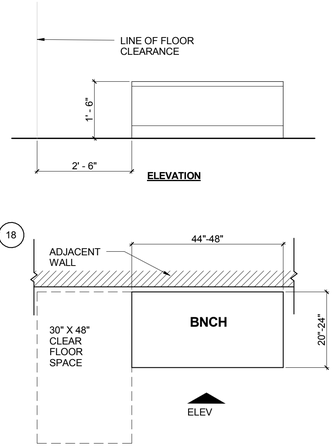

LOCKER ROOM ACCESSIBLE BENCHES

NOTE: FOR TOILET ACCESSORIES AND MOUNTING HEIGHTS, REFER TO SHEET AI-550

C1 AI-551 STANDARD PLUMBING FIXTURE LAYOUTS
1/2" = 1'-0"

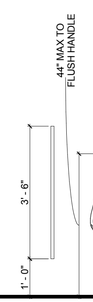

URINAL

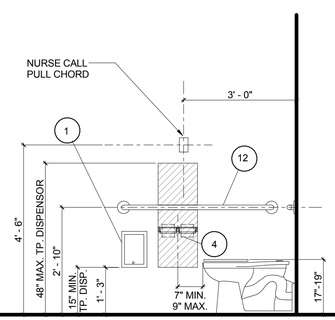

TYPICAL ROOM TOILET ELEVATION

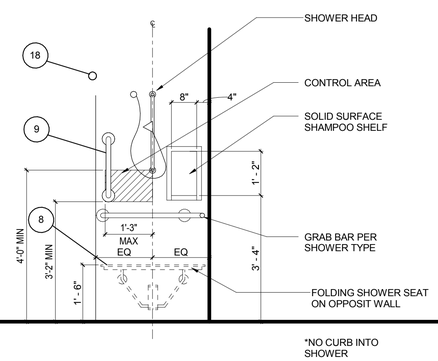

ACCESSIBLE TRANSFER SHOWER ELEVATION

A1 AI-551 STANDARD MOUNTING DIAGRAMS
1/2" = 1'-0"

SYM	DESCRIPTION	DATE
	FINAL CORRECTED SET	03/26/14
	100% FINAL DESIGN SUBMISSION	02/14/14
	65% VE SUBMISSION	11/25/13
	65% SUBMISSION	04/26/13

NAVFAC

COMMONWEALTH OF VIRGINIA
PAUL G. HEFLIN
012267
3/26/2014
ARCHITECT

HDR
ARCHITECTURE | ENGINEERING & CONSULTING
1101 KING STREET
SUITE 400
ALEXANDRIA, VIRGINIA 22314
703-518-8500

APPROVED
FOR COMMANDER NAVFAC
ACTIVITY
SATISFACTORY TO DATE

DES	ST	DRW MD	CHK HE
PM/DM	CHEMENJU/HILL		
BRANCH MANAGER	N/A		
CHIEF ENG/ARCH	TOM COX		

DEPARTMENT OF THE NAVY
NAVAL FACILITIES ENGINEERING COMMAND ~ NAVFAC WASHINGTON
ATLANTIC
Walter Reed National Military Medical Center - Bethesda, Maryland
NSA/Bethesda
BETHESDA, MD
P125 - TEMPORARY MEDICAL FACILITIES
PACKAGE 2 - CLINIC BUILDING
ARCHITECTURAL - STANDARD TOILET LAYOUTS AND ACCESSORY MOUNTING HEIGHTS

SCALE: 1/2" = 1'-0"
EPROJECT NO.: 1151333
CONSTR. CONTR. NO. N62470-09-D-9044
NAVFAC DRAWING NO. 13065861
SHEET OF 0

AI-551

C:\vkt\191274-A-F2-CENTRAL_gowhite.rvt 3/19/2014 3:31:20 PM

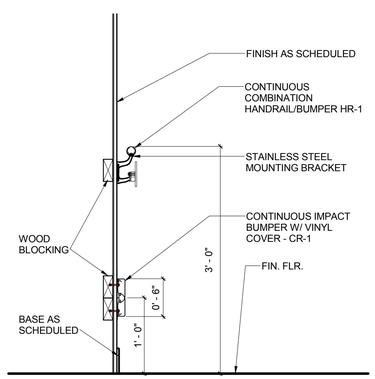

A1 SECTION DETAIL HR-1 AND CR-1

1" = 1'-0" 0 6" 1'-0" 2'-0"

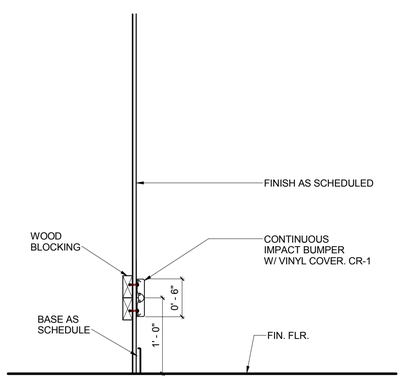

A3 SECTION DETAIL CR-1

1" = 1'-0" 0 6" 1'-0" 2'-0"

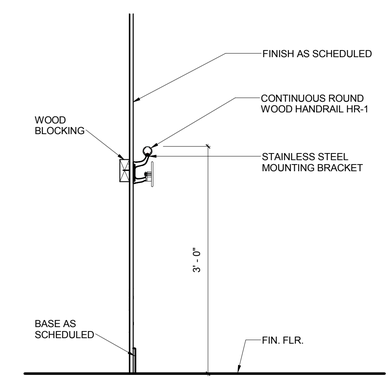

A4 SECTION DETAIL HR-1

1" = 1'-0" 0 6" 1'-0" 2'-0"

SYM	DESCRIPTION	DATE
	FINAL CORRECTED SET	03/26/14
	100% FINAL DESIGN SUBMISSION	02/14/14
	65% VE SUBMISSION	11/25/13

NAVFAC

COMMONWEALTH OF VIRGINIA
PAUL G. HEFLIN
012267
3/26/2014
ARCHITECT

HDR

ARCHITECTURE | ENGINEERING & CONSULTING
1101 KING STREET
SUITE 400
ALEXANDRIA, VIRGINIA 22314
703-518-8500

APPROVED

FOR COMMANDER NAVFAC

ACTIVITY

SATISFACTORY TO DATE

DES PP DRW PP CHK HE

PM/DM CHEMENJU/HILL

BRANCH MANAGER N/A

CHIEF ENG/ARCH TOM COX

DEPARTMENT OF THE NAVY
NAVAL FACILITIES ENGINEERING COMMAND ~ NAVFAC WASHINGTON
ATLANTIC
Walter Reed National Military Medical Center - Bethesda, Maryland
NSA/Bethesda
BETHESDA, MD
P125 - TEMPORARY MEDICAL FACILITIES
PACKAGE 2 - CLINIC BUILDING
ARCHITECTURAL - WALL PROTECTION AND CORNER GUARD DETAILS

SCALE: 1" = 1'-0"

EFPROJECT NO.: 1151333

CONSTR. CONTR. NO. N62470-09-D-9044

NAVFAC DRAWING NO. 13065862

SHEET OF 0

AI-560

C:\vk191274-A-F2-CENTRAL_gowhite.rvt 3/19/2014 3:31:22 PM