GENERAL NOTES:

A. REFER TO SHEETS E-001 & E-002 FOR LEGENDS, SYMBOLS AND ABBREVIATIONS.
B. REFER TO SHEET E-652 FOR FEEDER, TRANSFORMER AND MOTORE STARTER SCHEDULES.

KEYED NOTES:

1 JUNCTION BOX FOR BRANCH SELECTOR BOXES. COORDINATE WITH MECHANICAL CONTRACTOR FOR EXACT CONNECTION.

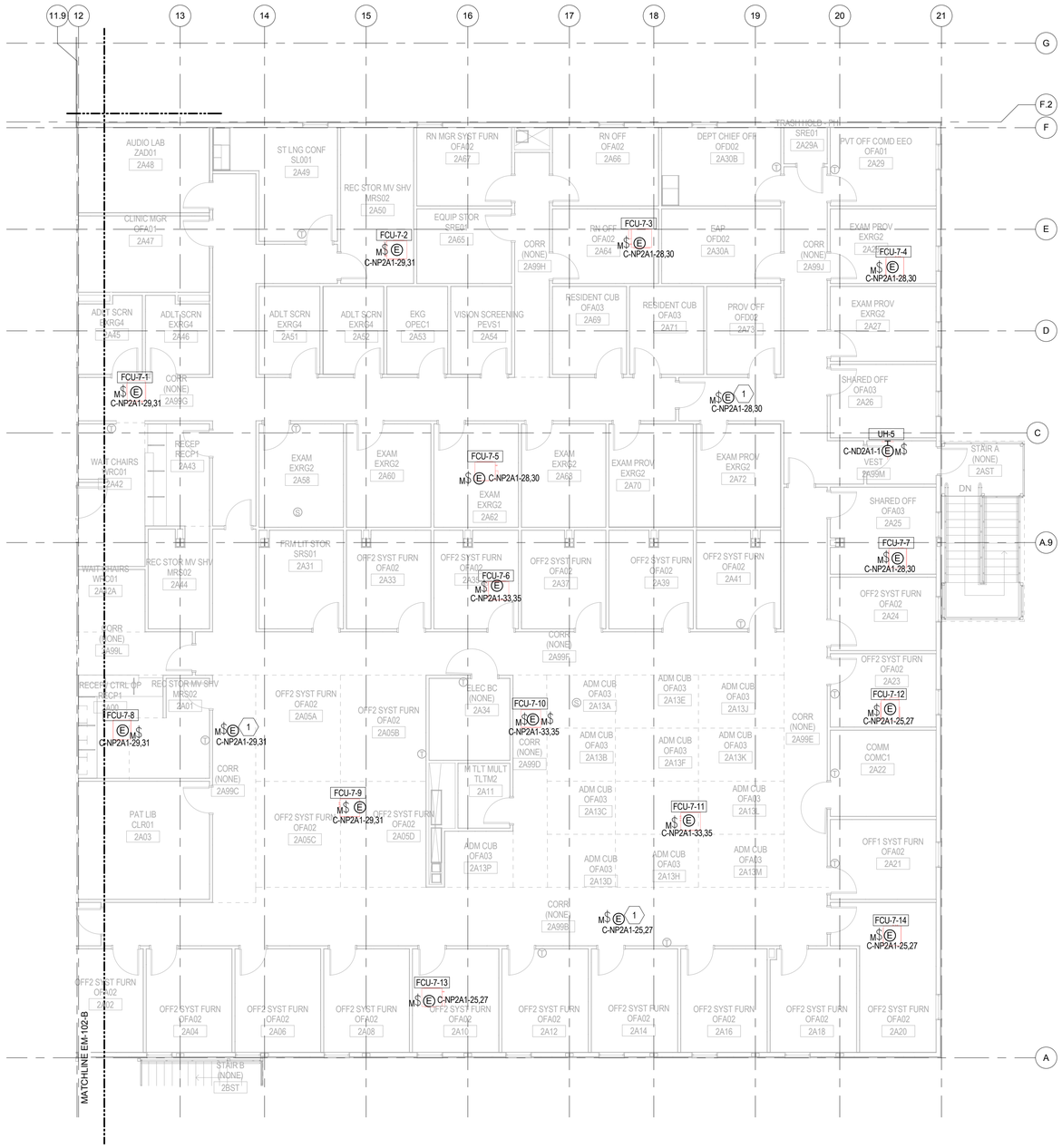

1 ELECTRICAL - MECHANICAL POWER PLAN - SECOND FLOOR - AREA A
1/8" = 1'-0"

0 4'-0" 8'-0" 16'-0"

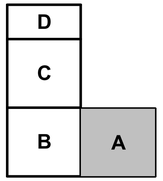

KEY PLAN

SYM	DESCRIPTION	DATE
	FINAL CORRECTED SET	03/26/14
	100% FINAL DESIGN SUBMISSION	02/14/14
	65% VE SUBMISSION	11/25/13

NAVFAC

STATE OF MARYLAND — DAVID C. BECHTOLD — No. 15,150 — PROFESSIONAL ENGINEER — 3/26/14

HDR
ARCHITECTURE | ENGINEERING & CONSULTING
1101 KING STREET
SUITE 400
ALEXANDRIA, VIRGINIA 22314
703-518-8500

APPROVED
FOR COMMANDER NAVFAC
ACTIVITY
SATISFACTORY TO DATE

DES KM | DRW KM | CHK GK
PM/DM CHEMENJU/HILL
BRANCH MANAGER N/A
CHIEF ENG/ARCH TOM COX

DEPARTMENT OF THE NAVY
NAVAL FACILITIES ENGINEERING COMMAND
COMPONENT NAME
NAVAL FACILITIES ENGINEERING COMMAND ~ AGENCY
BASE - CITY STATE
BETHESDA, MD
PROJECT STATION/INSTALLATION
P125 - TEMPORARY MEDICAL FACILITIES
PACKAGE 2 - CLINIC BUILDING
ELECTRICAL - MECHANICAL POWER PLAN - SECOND FLOOR - AREA A

SCALE: 1/8" = 1'-0"
EPROJECT NO.: 1151333
CONSTR. CONTR. NO. N62470-09-D-9044
NAVFAC DRAWING NO. 13066072
SHEET OF 0
EM-102-A

C:\vrt\191274-MEP-F2-CENTRAL_bpongaud.rvt 3/19/2014 4:14:23 PM

GENERAL NOTES:

A. REFER TO SHEETS E-001 & E-002 FOR LEGENDS, SYMBOLS AND ABBREVIATIONS.
B. REFER TO SHEET E-652 FOR FEEDER, TRANSFORMER AND MOTORE STARTER SCHEDULES.

KEYED NOTES:

1 JUNCTION BOX FOR BRANCH SELECTOR BOXES. COORDINATE WITH MECHANICAL CONTRACTOR FOR EXACT CONNECTION.

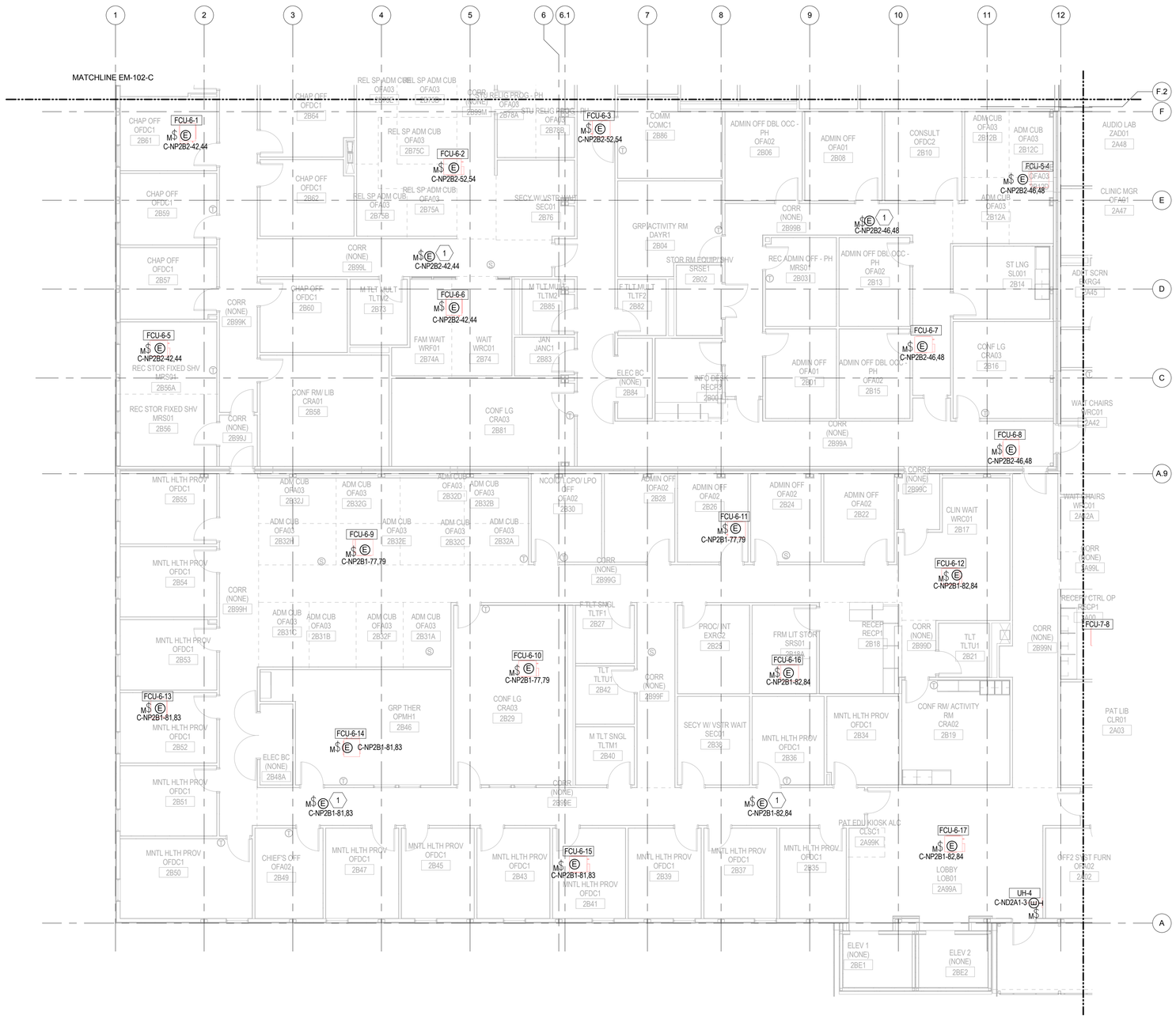

1 ELECTRICAL - MECHANICAL POWER PLAN - SECOND FLOOR - AREA B
1/8" = 1'-0"

0 4'-0" 8'-0" 16'-0"

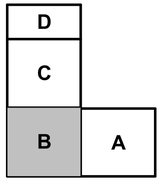

KEY PLAN

SYM	DESCRIPTION	DATE
	FINAL CORRECTED SET	03/26/14
	100% FINAL DESIGN SUBMISSION	02/14/14
	65% VE SUBMISSION	11/25/13

NAVFAC

STATE OF MARYLAND — DAVID C. BECHTOLD — No. 15015 — PROFESSIONAL ENGINEER — 3/26/14

HDR
ARCHITECTURE | ENGINEERING & CONSULTING
1101 KING STREET
SUITE 400
ALEXANDRIA, VIRGINIA 22314
703-518-8500

APPROVED
FOR COMMANDER NAVFAC
ACTIVITY
SATISFACTORY TO DATE

DES	KM	DRW	TP	CHK	GK
PM/DM	CHEMENJU/HILL				
BRANCH MANAGER	N/A				
CHIEF ENG/ARCH	TOM COX				

DEPARTMENT OF THE NAVY
NAVAL FACILITIES ENGINEERING COMMAND
COMPONENT NAME:
NAVAL FACILITIES ENGINEERING COMMAND ~ AGENCY
BASE - CITY STATE
BETHESDA, MD
PROJECT STATION/INSTALLATION
P125 - TEMPORARY MEDICAL FACILITIES
PACKAGE 2 - CLINIC BUILDING
ELECTRICAL - MECHANICAL POWER PLAN - SECOND FLOOR - AREA B

SCALE: 1/8" = 1'-0"
EPROJECT NO.: 1151333
CONSTR. CONTR. NO. N62470-09-D-9044
NAVFAC DRAWING NO. 13066073
SHEET 0 OF 0

EM-102-B

C:\cvt\191274-MEP-F2-CENTRAL_bpongsud.rvt 3/19/2014 4:14:28 PM

GENERAL NOTES:

A. REFER TO SHEETS E-001 & E-002 FOR LEGENDS, SYMBOLS AND ABBREVIATIONS.
B. REFER TO SHEET E-652 FOR FEEDER, TRANSFORMER AND MOTOR STARTER SCHEDULES.
C. ALL ROOF EQUIPMENT, PANELS AND FIXTURES SHALL BE WEATHERPROOF.
D. ALL ELECTRICAL EQUIPMENT ON ROOF SHALL BE NEMA 3R ENCLOSURES.

KEYED NOTES:

1 JUNCTION BOX FOR BRANCH SELECTOR BOXES. COORDINATE WITH MECHANICAL CONTRACTOR FOR EXACT CONNECTION.

1 ELECTRICAL - MECHANICAL POWER PLAN - SECOND FLOOR - AREA C
1/8" = 1'-0"

0 4'-0" 8'-0" 16'-0"

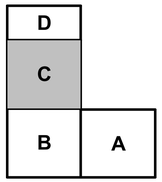

KEY PLAN

SYM	DESCRIPTION	DATE
	FINAL CORRECTED SET	03/26/14
	100% FINAL DESIGN SUBMISSION	02/14/14
	65% VE SUBMISSION	11/25/13

NAVFAC

STATE OF MARYLAND — DAVID C. BECHTOLD — REGISTERED PROFESSIONAL ENGINEER — NO. 15015 — 03/26/14

HDR
ARCHITECTURE | ENGINEERING & CONSULTING
1101 KING STREET
SUITE 400
ALEXANDRIA, VIRGINIA 22314
703-518-8500

APPROVED
FOR COMMANDER NAVFAC
ACTIVITY
SATISFACTORY TO DATE

DES	KM	DRW	TP	CHK	GK
PM/DM	CHEMENJU/HILL				
BRANCH MANAGER	N/A				
CHIEF ENG/ARCH	TOM COX				

DEPARTMENT OF THE NAVY
NAVAL FACILITIES ENGINEERING COMMAND
COMPONENT NAME:
NAVAL FACILITIES ENGINEERING COMMAND ~ AGENCY
BASE - CITY, STATE
BETHESDA, MD
PROJECT STATION/INSTALLATION
P125 - TEMPORARY MEDICAL FACILITIES
PACKAGE 2 - CLINIC BUILDING
ELECTRICAL - MECHANICAL POWER PLAN - SECOND FLOOR - AREA C

SCALE: 1/8" = 1'-0"
EPROJECT NO: 1151333
CONSTR. CONTR. NO. N62470-09-D-9044
NAVFAC DRAWING NO. 13066074
SHEET 0 OF 0

EM-102-C

C:\n/t191274-MEP-F2-CENTRAL_tpongud.rvt 3/19/2014 4:14:32 PM

GENERAL NOTES:

A. REFER TO SHEETS E-001 & E-002 FOR LEGENDS, SYMBOLS AND ABBREVIATIONS.
B. REFER TO SHEET E-652 FOR FEEDER, TRANSFORMER AND MOTORE STARTER SCHEDULES.
C. ALL ROOF EQUIPMENT, PANELS AND FIXTURES SHALL BE WEATHERPROOF.
D. ALL ELECTRICAL EQUIPMENT ON ROOF SHALL BE NEMA 3R ENCLOSURES.

KEYED NOTES:

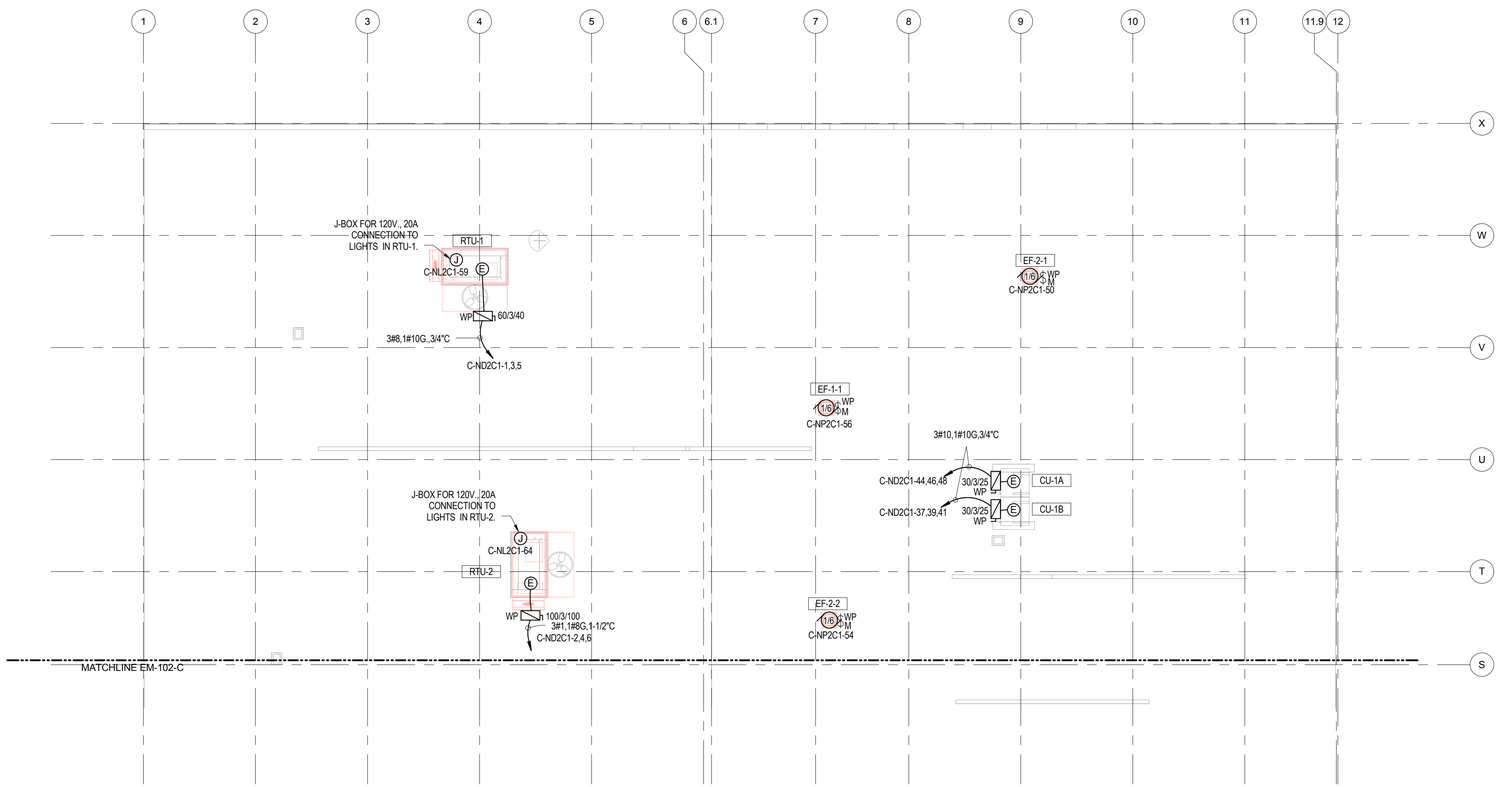

1 ELECTRICAL - MECHANICAL POWER PLAN - SECOND FLOOR - AREA D

1/8" = 1'-0"

0 4'-0" 8'-0" 16'-0"

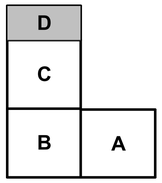

KEY PLAN

SYM	DESCRIPTION	DATE
	FINAL CORRECTED SET	03/26/14
	100% FINAL DESIGN SUBMISSION	02/14/14
	65% VE SUBMISSION	11/25/13

NAVFAC

STATE OF MARYLAND — DAVID C. BECHTOL — No. 15000 — PROFESSIONAL ENGINEER

3/26/14

HDR

ARCHITECTURE | ENGINEERING & CONSULTING

1101 KING STREET
SUITE 400
ALEXANDRIA, VIRGINIA 22314
703-518-8500

APPROVED

FOR COMMANDER NAVFAC

ACTIVITY

SATISFACTORY TO DATE

DES	KM	DRW	KM	CHK	GK
PM/DM	CHEMENJU/HILL				
BRANCH MANAGER	N/A				
CHIEF ENG/ARCH	TOM COX				

DEPARTMENT OF THE NAVY
NAVAL FACILITIES ENGINEERING COMMAND
COMPONENT NAME:
NAVAL FACILITIES ENGINEERING COMMAND ~ AGENCY
BASE - CITY, STATE
BETHESDA, MD
PROJECT STATION/INSTALLATION
P125 - TEMPORARY MEDICAL FACILITIES
PACKAGE 2 - CLINIC BUILDING
ELECTRICAL - MECHANICAL POWER PLAN - SECOND FLOOR - AREA D

SCALE: 1/8" = 1'-0"
EPROJECT NO.: 1151333
CONSTR. CONTR. NO.: N62470-09-D-9044
NAVFAC DRAWING NO.: 13066075
SHEET OF 0

EM-102-D

C:\vrf\191274-MEP-F2-CENTRAL_tpongsud.rvt 3/19/2014 4:14:36 PM

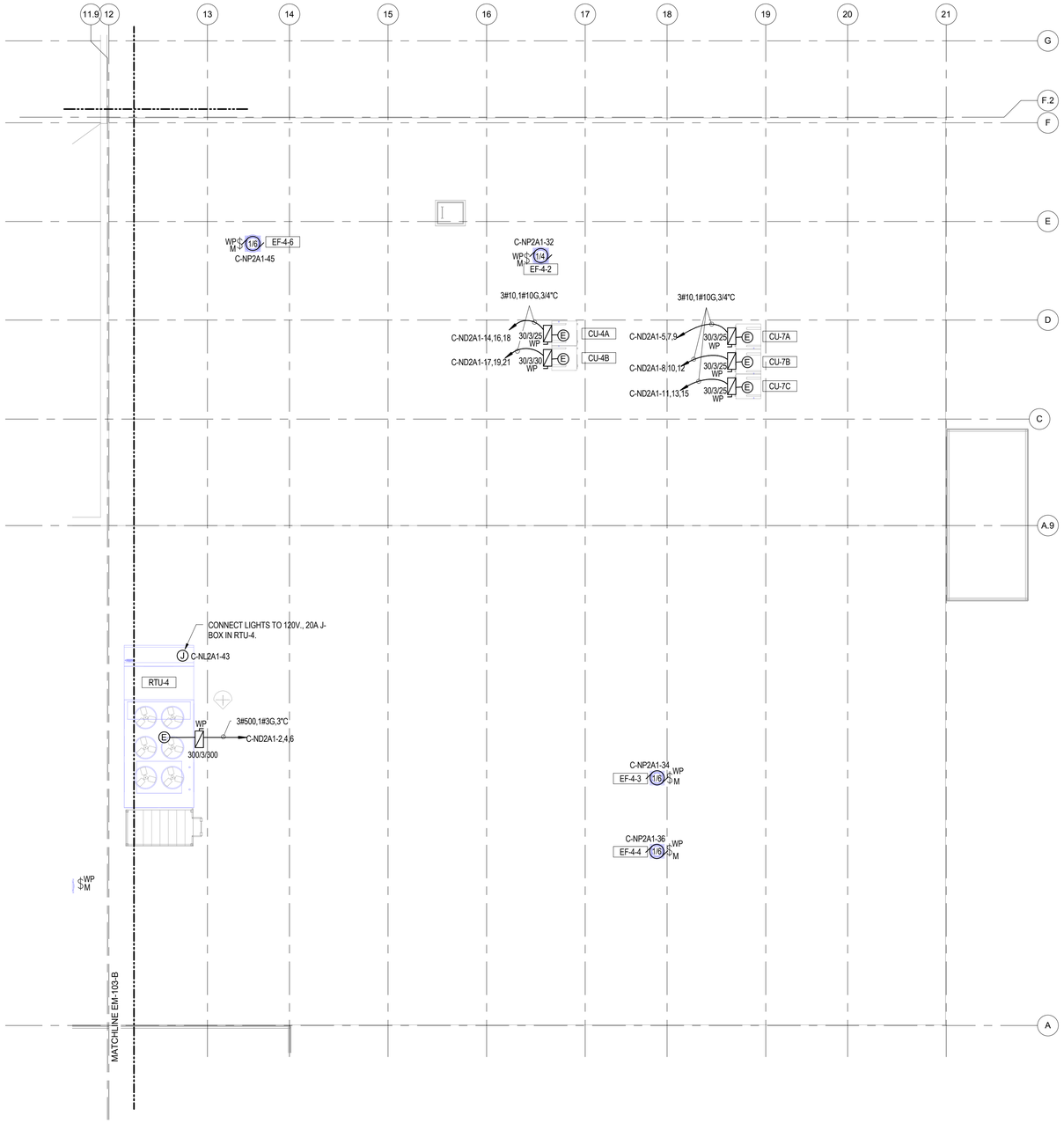

1 ELECTRICAL - MECHANICAL POWER PLAN - ROOF PLAN - AREA A

1/8" = 1'-0"

0 4'-0" 8'-0" 16'-0"

GENERAL NOTES:

A. REFER TO SHEETS E-001 & E-002 FOR LEGENDS, SYMBOLS AND ABBREVIATIONS.
B. REFER TO SHEET E-652 FOR FEEDER, TRANSFORMER AND MOTOR STARTER SCHEDULES.
C. ALL ROOF EQUIPMENT, PANELS AND FIXTURES SHALL BE WEATHERPROOF.
D. ALL ELECTRICAL EQUIPMENT ON ROOF SHALL BE NEMA 3R ENCLOSURES.

KEYED NOTES:

SYM	DESCRIPTION	DATE
	FINAL CORRECTED SET	03/26/14
	100% FINAL DESIGN SUBMISSION	02/14/14
	65% VE SUBMISSION	11/25/13

NAVFAC

STATE OF MARYLAND — DAVID C. BECHTOLD — REG. NO. 15090 — PROFESSIONAL ENGINEER — 3/26/14

HDR

ARCHITECTURE | ENGINEERING & CONSULTING
1101 KING STREET
SUITE 400
ALEXANDRIA, VIRGINIA 22314
703-518-8500

APPROVED

FOR COMMANDER NAVFAC

ACTIVITY

SATISFACTORY TO DATE

DES	KM	DRW	TP	CHK	GK

PM/DM: CHEMENJU/HILL
BRANCH MANAGER: N/A
CHIEF ENG/ARCH: TOM COX

DEPARTMENT OF THE NAVY
NAVAL FACILITIES ENGINEERING COMMAND ~ AGENCY
COMPONENT NAME: NAVAL FACILITIES ENGINEERING COMMAND
BASE - CITY STATE

PROJECT STATION/INSTALLATION
BETHESDA, MD

P125 - TEMPORARY MEDICAL FACILITIES
PACKAGE 2 - CLINIC BUILDING

ELECTRICAL - MECHANICAL POWER PLAN - ROOF PLAN - AREA A

SCALE: 1/8" = 1'-0"
EPROJECT NO.: 1151333
CONSTR. CONTR. NO.: N62470-09-D-9044
NAVFAC DRAWING NO.: 13066076
SHEET 0 OF 0

EM-103-A

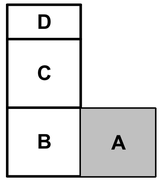

KEY PLAN

C:\vrt\19274-MEP-F2-CENTRAL_bpongsud.rvt 3/19/2014 4:14:39 PM

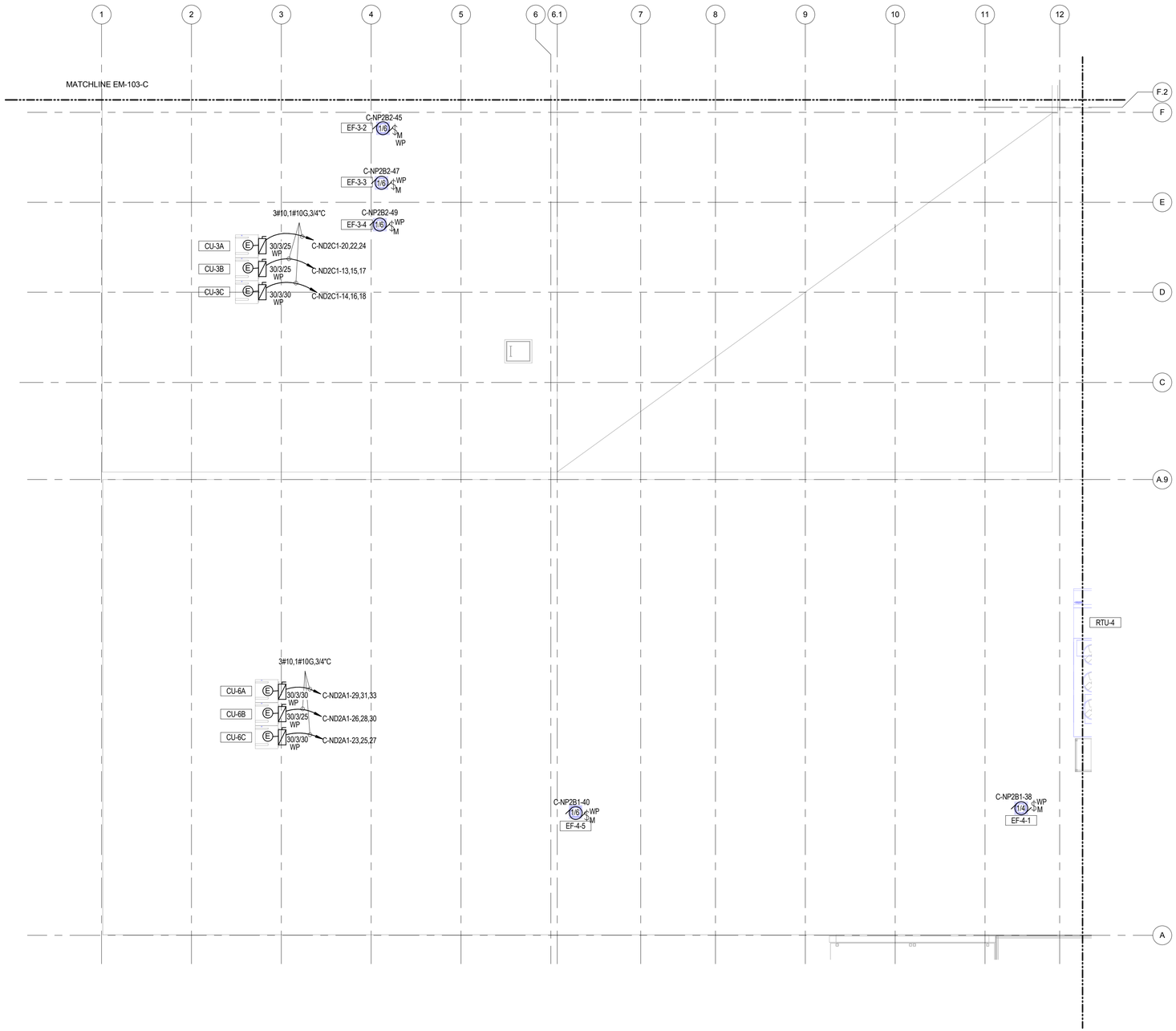

GENERAL NOTES:

A. REFER TO SHEETS E-001 & E-002 FOR LEGENDS, SYMBOLS AND ABBREVIATIONS.
B. REFER TO SHEET E-652 FOR FEEDER, TRANSFORMER AND MOTOR STARTER SCHEDULES.
C. ALL ROOF EQUIPMENT, PANELS AND FIXTURES SHALL BE WEATHERPROOF.
D. ALL ELECTRICAL EQUIPMENT ON ROOF SHALL BE NEMA 3R ENCLOSURES.

KEYED NOTES:

SYM	DESCRIPTION	DATE
	FINAL CORRECTED SET	03/26/14
	100% FINAL DESIGN SUBMISSION	02/14/14
	65% VE SUBMISSION	11/25/13

NAVFAC

STATE OF MARYLAND
PAUL C. BECHTOLD
No. 15090
PROFESSIONAL ENGINEER
3/26/14

HDR

ARCHITECTURE | ENGINEERING & CONSULTING
1101 KING STREET
SUITE 400
ALEXANDRIA, VIRGINIA 22314
703-518-8500

APPROVED
FOR COMMANDER NAVFAC
ACTIVITY
SATISFACTORY TO DATE

DES	KM	DRW	TP	CHK	GK
PM/DM	CHEMENJU/HILL				
BRANCH MANAGER	N/A				
CHIEF ENG/ARCH	TOM COX				

DEPARTMENT OF THE NAVY
NAVAL FACILITIES ENGINEERING COMMAND
COMPONENT NAME:
NAVAL FACILITIES ENGINEERING COMMAND ~ AGENCY
BASE - CITY, STATE
BETHESDA, MD
PROJECT STATION/INSTALLATION
P125 - TEMPORARY MEDICAL FACILITIES
PACKAGE 2 - CLINIC BUILDING
ELECTRICAL - MECHANICAL POWER PLAN - ROOF PLAN - AREA B

SCALE: 1/8" = 1'-0"
EPROJECT NO.: 1151333
CONSTR. CONTR. NO. N62470-09-D-9044
NAVFAC DRAWING NO. 13066077
SHEET OF 0
EM-103-B

1 ELECTRICAL - MECHANICAL POWER PLAN - ROOF PLAN - AREA B
1/8" = 1'-0"

0 4'-0" 8'-0" 16'-0"

KEY PLAN
D
C
B
A

C:\vrt\191274-MEP-F2-CENTRAL_tpongsud.rvt 3/19/2014 4:14:42 PM

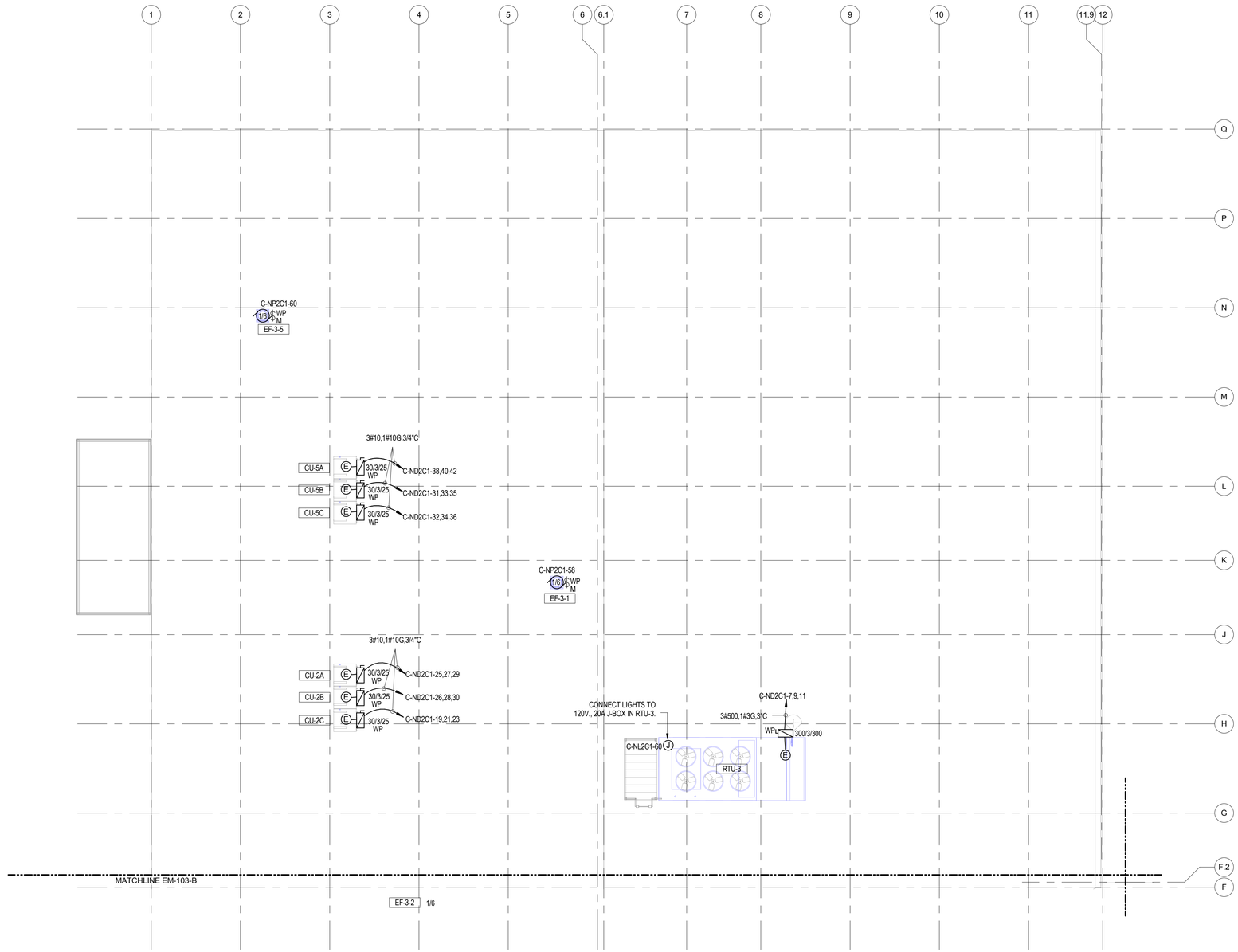

1 ELECTRICAL - MECHANICAL POWER PLAN - ROOF PLAN - AREA C

1/8" = 1'-0"

0 4'-0" 8'-0" 16'-0"

GENERAL NOTES:

A. REFER TO SHEETS E-001 & E-002 FOR LEGENDS, SYMBOLS AND ABBREVIATIONS.
B. REFER TO SHEET E-652 FOR FEEDER, TRANSFORMER AND MOTOR STARTER SCHEDULES.
C. ALL ROOF EQUIPMENT, PANELS AND FIXTURES SHALL BE WEATHERPROOF.
D. ALL ELECTRICAL EQUIPMENT ON ROOF SHALL BE NEMA 3R ENCLOSURES.

KEYED NOTES:

SYM	DESCRIPTION	DATE
	FINAL CORRECTED SET	03/26/14
	100% FINAL DESIGN SUBMISSION	02/14/14
	65% VE SUBMISSION	11/25/13

NAVFAC

STATE OF MARYLAND
DAVID C. BECHTOLD
No. 15000
PROFESSIONAL ENGINEER
3/26/14

HDR

ARCHITECTURE | ENGINEERING & CONSULTING
1101 KING STREET
SUITE 400
ALEXANDRIA, VIRGINIA 22314
703-518-8500

APPROVED

FOR COMMANDER NAVFAC

ACTIVITY

SATISFACTORY TO DATE

DES KM DRW KM CHK GK

PMDM CHEMENJU/HILL

BRANCH MANAGER N/A

CHIEF ENG/ARCH TOM COX

DEPARTMENT OF THE NAVY
NAVAL FACILITIES ENGINEERING COMMAND
COMPONENT NAME
NAVAL FACILITIES ENGINEERING COMMAND – AGENCY
BASE - CITY, STATE
BETHESDA, MD
PROJECT STATION/INSTALLATION
P125 - TEMPORARY MEDICAL FACILITIES
PACKAGE 2 - CLINIC BUILDING
ELECTRICAL - MECHANICAL POWER PLAN - ROOF PLAN - AREA C

SCALE: 1/8" = 1'-0"

EPROJECT NO.: 1151333

CONSTR. CONTR. NO. N62470-09-D-9044

NAVFAC DRAWING NO. 13066078

SHEET OF 0

EM-103-C

D
C
B A

KEY PLAN

C:\n\19\274\MEP-F2-CENTRAL_bpongsud.rvt 3/19/2014 4:14:45 PM

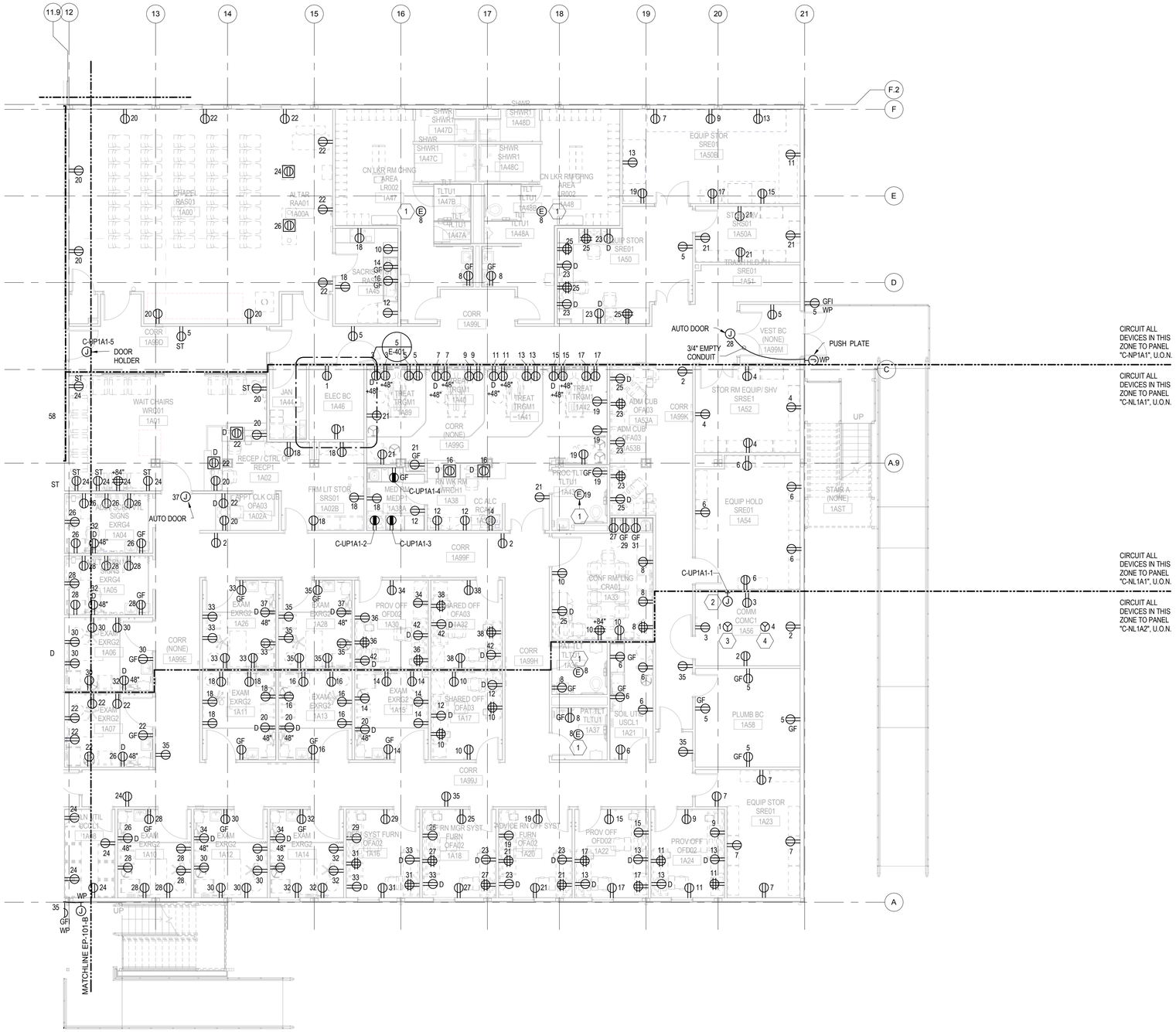

1 ELECTRICAL - POWER PLAN - FIRST FLOOR - AREA A

1/8" = 1'-0"

0 4'-0" 8'-0" 16'-0"

GENERAL NOTES:

A. REFER TO SHEETS E-001 & E-002 FOR LEGENDS, SYMBOLS AND ABBREVIATIONS.

B. REFER TO SHEET E-652 FOR FEEDER, TRANSFORMER AND MOTOR STARTER SCHEDULES.

KEYED NOTES:

1. CONNECT TO ELECTRICAL FLUSHING SYSTEM IN THIS ROOM. COORDINATE WITH PLUMBING DRAWINGS FOR FINAL DEVICES COUNT AND LOCATION INFORMATION.
2. CONNECT TO JUNCTION BOX FOR SECURITY PANEL. REFER TO SECURITY DRAWINGS FOR FINAL LOCATION AND MOUNTING HEIGHT INFORMATION.
3. L5-20R RECEPTACLE. CIRCUIT. REFER TO COMMUNICATION DRAWINGS FOR FINAL LOCATION INFORMATION.
4. L5-30R RECEPTACLE. CIRCUIT. REFER TO COMMUNICATION DRAWINGS FOR FINAL LOCATION INFORMATION.

SYM	DESCRIPTION	DATE
	FINAL CORRECTED SET	03/26/14
	100% FINAL DESIGN SUBMISSION	02/14/14
	65% VE SUBMISSION	11/25/13
	35% SUBMITTAL	03/08/13

NAVFAC

STATE OF MARYLAND — DAVID C. BECHTOLD — No. 15015 — PROFESSIONAL ENGINEER — 3/20/14

HDR

ARCHITECTURE | ENGINEERING & CONSULTING
1101 KING STREET
SUITE 400
ALEXANDRIA, VIRGINIA 22314
703-518-8500

APPROVED

FOR COMMANDER NAVFAC

ACTIVITY

SATISFACTORY TO DATE

DES	AE	DRW	HN	CHK	GK
PM/DM	CHEMENJU/HILL				
BRANCH MANAGER	N/A				
CHIEF ENG/ARCH	TOM COX				

DEPARTMENT OF THE NAVY
NAVAL FACILITIES ENGINEERING COMMAND
COMPONENT NAME
NAVAL FACILITIES ENGINEERING COMMAND ~ AGENCY
BASE - CITY, STATE
BETHESDA, MD

PROJECT STATION/INSTALLATION
P125 - TEMPORARY MEDICAL FACILITIES
PACKAGE 2 - CLINIC BUILDING

ELECTRICAL - POWER PLAN - FIRST FLOOR - AREA A

SCALE: 1/8" = 1'-0"
EPROJECT NO.: 1151333
CONSTR. CONTR. NO. N62470-09-D-9044
NAVFAC DRAWING NO. 13066079
SHEET OF 0

EP-101-A

KEY PLAN

D
C
B A

C:\vrt\19124-MEP-F2-CENTRAL_tpongaud.rvt 3/19/2014 4:14:51 PM

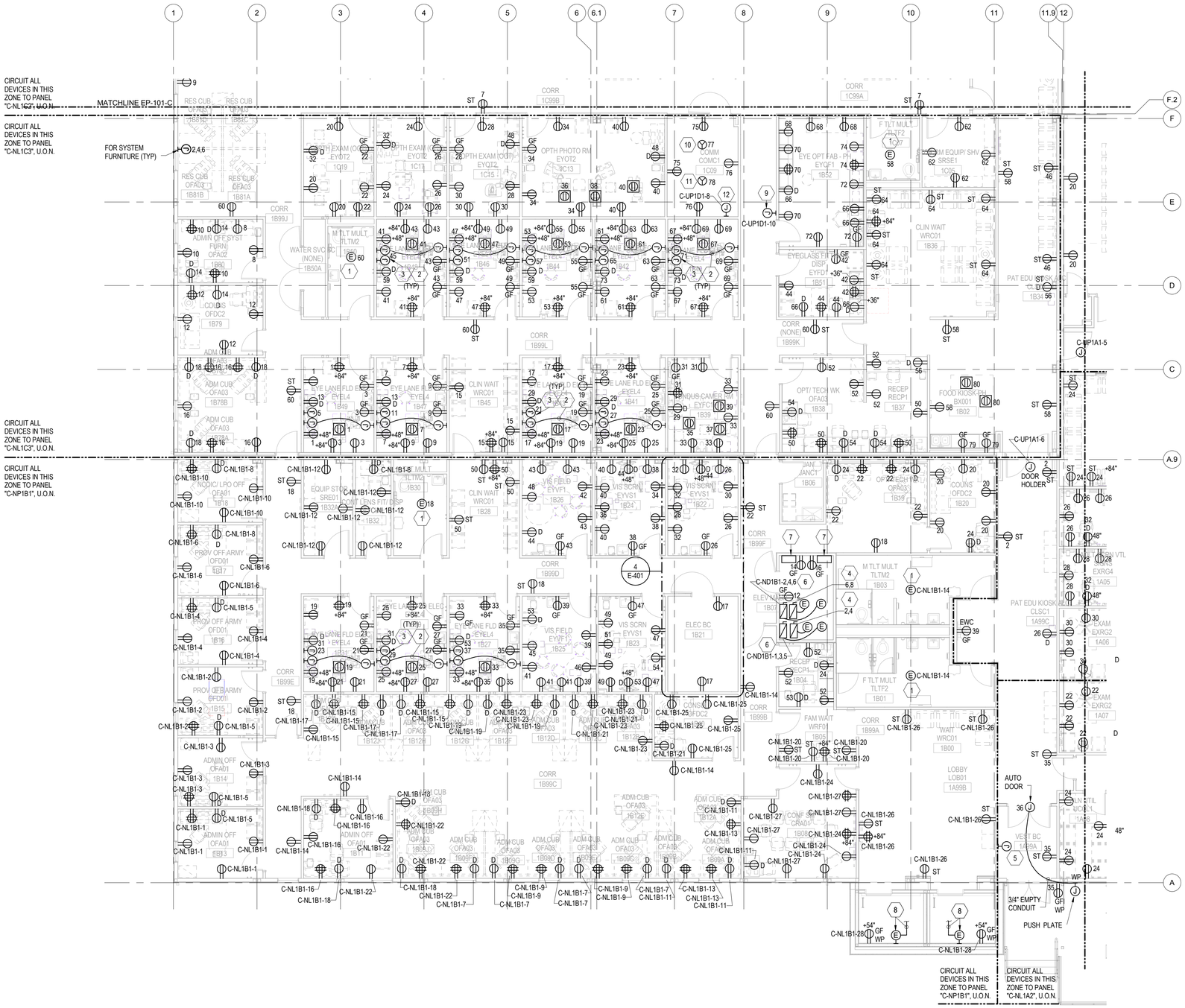

1 ELECTRICAL - POWER PLAN - FIRST FLOOR - AREA B

1/8" = 1'-0"

0 4'-0" 8'-0" 16'-0"

GENERAL NOTES:

A. REFER TO SHEETS E-001 & E-002 FOR LEGENDS, SYMBOLS AND ABBREVIATIONS.

B. REFER TO SHEET E-652 FOR FEEDER, TRANSFORMER AND MOTOR STARTER SCHEDULES.

KEYED NOTES:

1 CONNECT TO ELECTRICAL FLUSHING SYSTEM IN THIS ROOM. COORDINATE WITH PLUMBING DRAWINGS FOR FINAL DEVICES COUNT AND LOCATION INFORMATION.

2 PROVIDE 2#18 IN 1/2" C. WITH 24" COIL WIRE AT EACH J-BOX.

3 3-GANG J-BOX. PROVIDE WIRE AS FOLLOW: 1-HOT, 1-NEUTRAL, 1-GROUND, 20AMP, 120VOLT CIRCUIT, SWITCH LEG FOR 277VOLT GENERAL LIGHTING TO BE RUN THROUGH SINGLE POLE DIMMING SWITCH AT DOOR. SWITCH LEGS FROM DUPLEX PORTION OF QUAD RECEPTACLE ON THE FRONT WALL. MAIN CONNECTING CABLE FROM BOX TO CONTROL BOX IN CABINET IS NUMBERED AS FOLLOW: 1)GROUND, 2)NEUTRAL, 3)HOT WIRE, 5)SWITCH LEG FOR GENERAL LIGHTING TO BE TWISTED TOGETHER WITH HOT WIRE #3, 6)NOT USED - CAP OFF, 7)SWITCH LEG TO SINGLE POLE AT DOOR. COORDINATE WITH REFRACTION DESK MANUFACTURER's RECOMMENDATIONS FOR DUAL-VOLTAGE POWER CONNECTION.

4

5 JUNCTION BOX FOR FIRE ALARM PANEL. REFER TO FIRE ALARM DRAWINGS FOR FINAL LOCATION AND MOUNTING HEIGHT INFORMATION.

6 3P, 60A FUSE DISCONNECT SWITCH FUSED @60A FOR 30HP ELEVATOR POWER. RUN 3#4, 1#8 GND. IN 1-1/4"C TO SHUNT TRIP CIRCUIT BREAKER AS SHOWN.

7 OIL MINDER CONTROL SYSTEM PANEL BY DIVISION 15.

8 J-BOX BY DIVISION 15 PROVIDE ONE EMPTY CONDUIT FROM J-BOX TO OIL MINDER CONTROL SYSTEM PANEL IN ELEVATOR MACHINE ROOM 1B07, THIS SHEET. CONDUIT SIZE AS REQUIRED BY ELEVATOR CONTRACTOR.

9 JUNCTION BOX FOR EMERGENCY HORN/STROBE EYE WASHING. SEE PLUMBING DRAWING(S) FOR EXACT LOCATION.

10 L5-20R RECEPTACLE. CIRCUIT. REFER TO COMMUNICATION DRAWINGS FOR FINAL LOCATION INFORMATION.

11 L5-30R RECEPTACLE. CIRCUIT. REFER TO COMMUNICATION DRAWINGS FOR FINAL LOCATION INFORMATION.

12 CONNECT TO JUNCTION BOX FOR SECURITY PANEL. REFER TO SECURITY DRAWINGS FOR FINAL LOCATION AND MOUNTING HEIGHT INFORMATION.

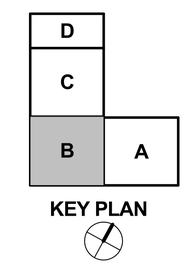

KEY PLAN

SYM	DESCRIPTION	DATE
	FINAL CORRECTED SET	03/26/14
	100% FINAL DESIGN SUBMISSION	02/14/14
	65% VE SUBMISSION	11/25/13
	35% SUBMITTAL	03/08/13

NAVFAC

STATE OF MARYLAND — PAUL C. BECHTOLD — REGISTERED PROFESSIONAL ENGINEER — 3/20/14

HDR

ARCHITECTURE | ENGINEERING & CONSULTING

1101 KING STREET
SUITE 400
ALEXANDRIA, VIRGINIA 22314
703-518-8500

APPROVED

FOR COMMANDER NAVFAC

ACTIVITY

SATISFACTORY TO DATE

DES	AE	DRW	HN	CHK	GK

PM/DM: CHEMENJU/HILL

BRANCH MANAGER: N/A

CHIEF ENG/ARCH: TOM COX

DEPARTMENT OF THE NAVY
NAVAL FACILITIES ENGINEERING COMMAND
COMPONENT NAME:

NAVAL FACILITIES ENGINEERING COMMAND — AGENCY
BASE - CITY, STATE: BETHESDA, MD

PROJECT STATION/INSTALLATION
P125 - TEMPORARY MEDICAL FACILITIES
PACKAGE 2 - CLINIC BUILDING

ELECTRICAL - POWER PLAN - FIRST FLOOR - AREA B

SCALE: 1/8" = 1'-0"

EPROJECT NO. 1151333

CONSTR. CONTR. NO. N62470-09-D-9044

NAVFAC DRAWING NO. 13066080

SHEET OF 0

EP-101-B

C:\wf\191274-MEP-F2-CENTRAL_tpongsud.rvt 3/19/2014 4:14:57 PM

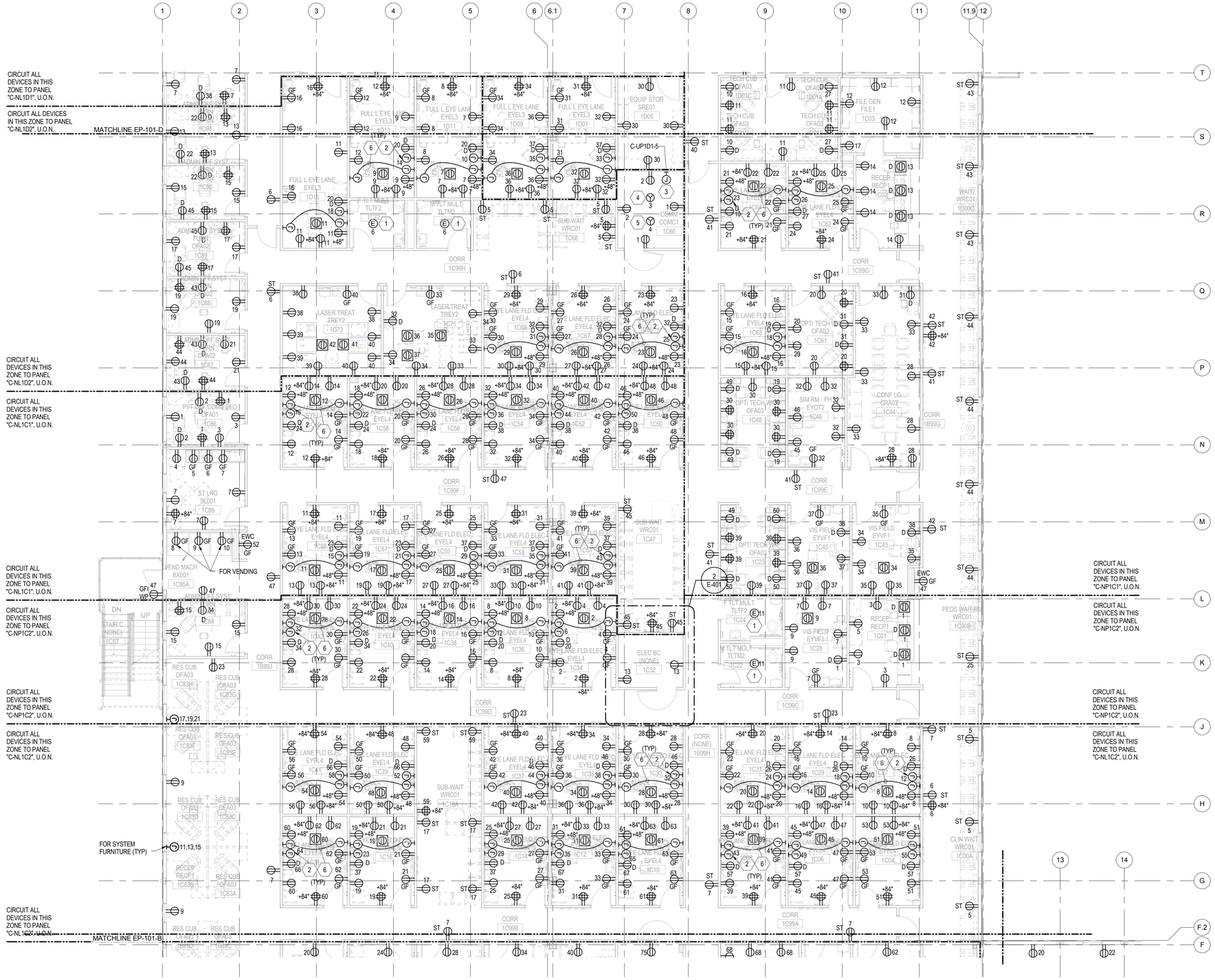

1 ELECTRICAL - POWER PLAN - FIRST FLOOR - AREA C

1/8" = 1'-0"

0 4'-0" 8'-0" 16'-0"

GENERAL NOTES:

A. REFER TO SHEETS E-001 & E-002 FOR LEGENDS, SYMBOLS AND ABBREVIATIONS.

B. REFER TO SHEET E-652 FOR FEEDER, TRANSFORMER AND MOTOR STARTER SCHEDULES.

KEYED NOTES:

1. CONNECT TO ELECTRICAL FLUSHING SYSTEM IN THIS ROOM. COORDINATE WITH PLUMBING DRAWINGS FOR FINAL DEVICES COUNT AND LOCATION INFORMATION.
2. 3-GANG J-BOX. PROVIDE WIRE AS FOLLOW: 1-HOT, 1-NEUTRAL, 1-GROUND, 20AMP, 120VOLT CIRCUIT. SWITCH LEG FOR 277VOLT GENERAL LIGHTING TO BE RUN THROUGH SINGLE POLE DIMMING SWITCH AT DOOR. SWITCH LEGS FROM DUPLEX PORTION OF QUAD RECEPTACLE ON THE FRONT WALL. MAIN CONNECTING CABLE FROM BOX TO CONTROL BOX IN CABINET IS NUMBERED AS FOLLOW: 1)GROUND, 2)NEUTRAL, 3)HOT WIRE, 5)SWITCH LEG FOR GENERAL LIGHTING TO BE TWISTED TOGETHER WITH HOT WIRE #3, 6)NOT USED - CAP OFF, 7)SWITCH LEG TO SINGLE POLE AT DOOR. COORDINATE WITH REFRACTION DESK MANUFACTURER's RECOMMENDATIONS FOR DUAL-VOLTAGE POWER CONNECTION.
3. CONNECT TO JUNCTION BOX FOR SECURITY PANEL. REFER TO SECURITY DRAWINGS FOR FINAL LOCATION AND MOUNTING HEIGHT INFORMATION.
4. L5-20R RECEPTACLE. CIRCUIT. REFER TO COMMUNICATION DRAWINGS FOR FINAL LOCATION INFORMATION.
5. L5-30R RECEPTACLE. CIRCUIT. REFER TO COMMUNICATION DRAWINGS FOR FINAL LOCATION INFORMATION.
6. PROVIDE 2#18 IN 1/2" C. WITH 24" COIL WIRE AT EACH J-BOX.

SYM	DESCRIPTION	DATE
	FINAL CORRECTED SET	03/26/14
	100% FINAL DESIGN SUBMISSION	02/14/14
	65% VE SUBMISSION	11/25/13
	35% SUBMITTAL	03/08/13

NAVFAC

STATE OF MARYLAND — PAUL G. TRUMBLE — REGISTERED PROFESSIONAL ENGINEER — No. 15015 — 3/26/14

HDR

ARCHITECTURE | ENGINEERING & CONSULTING
1101 KING STREET
SUITE 400
ALEXANDRIA, VIRGINIA 22314
703-518-8500

APPROVED

FOR COMMANDER NAVFAC

ACTIVITY

SATISFACTORY TO DATE

DES KM DRW HN CHK GK

PM/DM CHEMENJU/HILL

BRANCH MANAGER N/A

CHIEF ENG/ARCH TOM COX

DEPARTMENT OF THE NAVY
NAVAL FACILITIES ENGINEERING COMMAND
COMPONENT NAME
NAVAL FACILITIES ENGINEERING COMMAND — AGENCY
BASE, CITY, STATE
BETHESDA, MD
PROJECT STATION/INSTALLATION
P125 - TEMPORARY MEDICAL FACILITIES
PACKAGE 2 - CLINIC BUILDING
ELECTRICAL - POWER PLAN - FIRST FLOOR - AREA C

SCALE: 1/8" = 1'-0"

EPROJECT NO: 1151333

CONSTR. CONTR. NO. N62470-09-D-9044

NAVFAC DRAWING NO. 13066081

SHEET OF 0

EP-101-C

D C B A

KEY PLAN

C:\n191274.MEP-F2-CENTRAL_tpongsud.rvt 3/19/2014 4:15:03 PM

GENERAL NOTES:

A. REFER TO SHEETS E-001 & E-002 FOR LEGENDS, SYMBOLS AND ABBREVIATIONS.
B. REFER TO SHEET E-652 FOR FEEDER, TRANSFORMER AND MOTOR STARTER SCHEDULES.

KEYED NOTES:

1. JUNCTION BOX FOR FIRE ALARM PANEL. REFER TO FIRE ALARM DRAWINGS FOR FINAL LOCATION AND MOUNTING HEIGHT INFORMATION.
2. PROVIDE 2#18 IN 1/2" C. WITH 24" COIL WIRE AT EACH J-BOX.
3. 3-GANG J-BOX. PROVIDE WIRE AS FOLLOW: 1-HOT, 1-NEUTRAL, 1-GROUND, 20AMP, 120VOLT CIRCUIT, SWITCH LEG FOR 277VOLT GENERAL LIGHTING TO BE RUN THROUGH SINGLE POLE DIMMING SWITCH AT DOOR. SWITCH LEGS FROM DUPLEX PORTION OF QUAD RECEPTACLE ON THE FRONT WALL. MAIN CONNECTING CABLE FROM BOX TO CONTROL BOX IN CABINET IS NUMBERED AS FOLLOW: 1)GROUND, 2)NEUTRAL, 3)HOT WIRE, 5)SWITCH LEG FOR GENERAL LIGHTING TO BE TWISTED TOGETHER WITH HOT WIRE #3, 6)NOT USED - CAP OFF, 7)SWITCH LEG TO SINGLE POLE AT DOOR. COORDINATE WITH REFRACTION DESK MANUFACTURER's RECOMMENDATIONS FOR DUAL-VOLTAGE POWER CONNECTION.

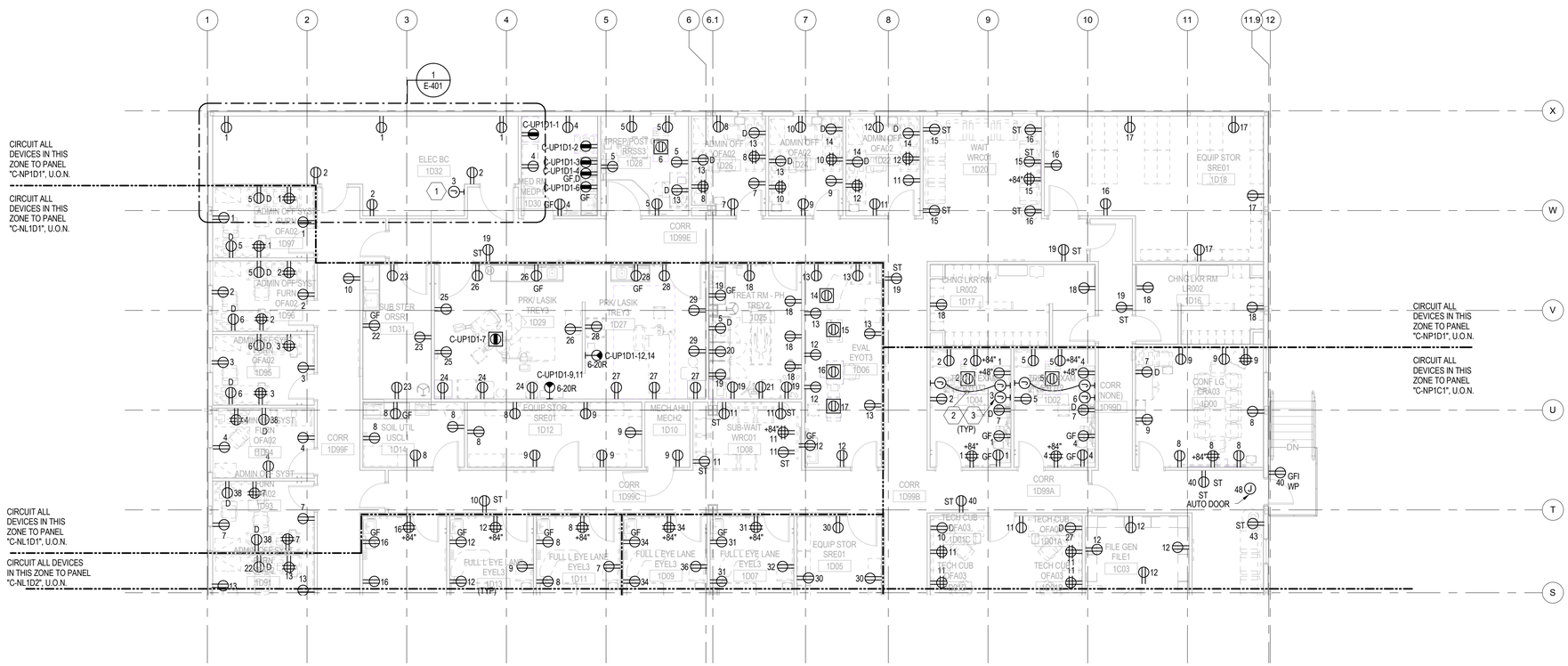

1 ELECTRICAL - POWER PLAN - FIRST FLOOR - AREA D
1/8" = 1'-0"

0 4'-0" 8'-0" 16'-0"

KEY PLAN

SYM	DESCRIPTION	DATE
	FINAL CORRECTED SET	03/26/14
	100% FINAL DESIGN SUBMISSION	02/14/14
	65% VE SUBMISSION	11/25/13
	35% SUBMITTAL	03/08/13

NAVFAC

STATE OF MARYLAND — REGISTERED PROFESSIONAL ENGINEER — 3/26/14

HDR
ARCHITECTURE | ENGINEERING & CONSULTING
1101 KING STREET
SUITE 400
ALEXANDRIA, VIRGINIA 22314
703-518-8500

APPROVED
FOR COMMANDER NAVFAC
ACTIVITY
SATISFACTORY TO DATE

DES	KM	DRW	HN	CHK	GK
PM/DM	CHEMENJU/HILL				
BRANCH MANAGER	N/A				
CHIEF ENG/ARCH	TOM COX				

DEPARTMENT OF THE NAVY
NAVAL FACILITIES ENGINEERING COMMAND
COMPONENT NAME: NAVAL FACILITIES ENGINEERING COMMAND ~ AGENCY
BASE - CITY, STATE: BETHESDA, MD
PROJECT STATION/INSTALLATION
P125 - TEMPORARY MEDICAL FACILITIES
PACKAGE 2 - CLINIC BUILDING
ELECTRICAL - POWER PLAN - FIRST FLOOR - AREA D

SCALE: 1/8" = 1'-0"
EPROJECT NO: 1151333
CONSTR. CONTR. NO. N62470-09-D-9044
NAVFAC DRAWING NO. 13066082
SHEET 0 OF
EP-101-D

C:\vrf\191274-MEP-F2-CENTRAL_tpongsud.rvt 3/19/2014 4:15:08 PM

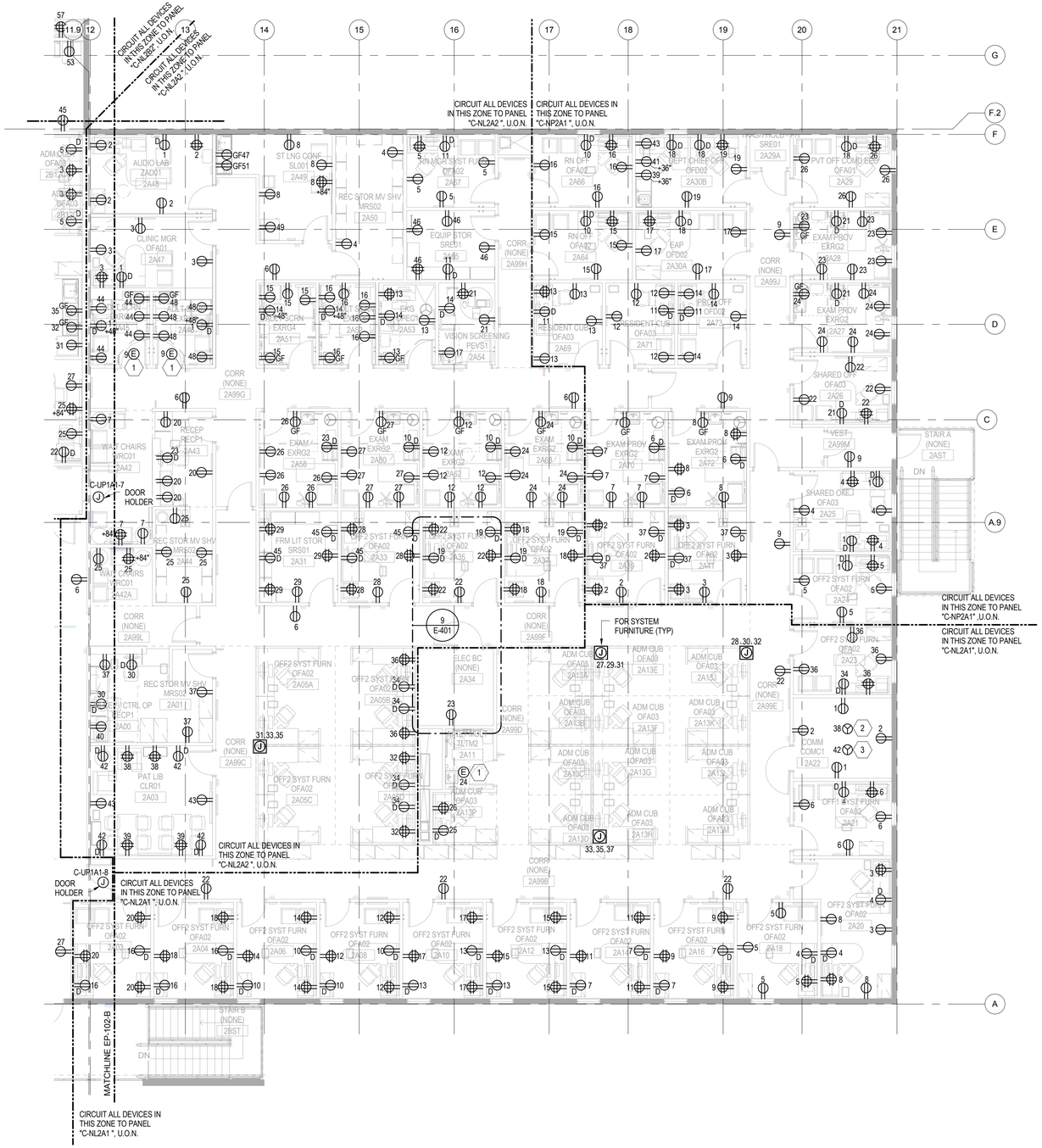

1 ELECTRICAL - POWER PLAN - SECOND FLOOR - AREA A

1/8" = 1'-0"

0 4'-0" 8'-0" 16'-0"

GENERAL NOTES:

A. REFER TO SHEETS E-001 & E-002 FOR LEGENDS, SYMBOLS AND ABBREVIATIONS.

B. REFER TO SHEET E-652 FOR FEEDER, TRANSFORMER AND MOTORE STARTER SCHEDULES.

KEYED NOTES:

1. CONNECT TO ELECTRICAL FLUSHING SYSTEM IN THIS ROOM. COORDINATE WITH PLUMBING DRAWINGS FOR FINAL DEVICES COUNT AND LOCATION INFORMATION.
2. L5-20R RECEPTACLE. CIRCUIT. REFER TO COMMUNICATION DRAWINGS FOR FINAL LOCATION INFORMATION.
3. L5-30R RECEPTACLE. CIRCUIT. REFER TO COMMUNICATION DRAWINGS FOR FINAL LOCATION INFORMATION.

SYM	DESCRIPTION	DATE
	FINAL CORRECTED SET	03/26/14
	100% FINAL DESIGN SUBMISSION	02/14/14
	65% VE SUBMISSION	11/25/13
	35% SUBMITTAL	03/08/13

NAVFAC

STATE OF MARYLAND — DAVID C. BECHTOLD — No. 15100 — PROFESSIONAL ENGINEER — 3/26/14

HDR

ARCHITECTURE | ENGINEERING & CONSULTING
1101 KING STREET
SUITE 400
ALEXANDRIA, VIRGINIA 22314
703-518-8500

APPROVED

FOR COMMANDER NAVFAC

ACTIVITY

SATISFACTORY TO DATE

DES	KM	DRW	HN	CHK	GK

PM/DM: CHEMENJU/HILL
BRANCH MANAGER: N/A
CHIEF ENG/ARCH: TOM COX

DEPARTMENT OF THE NAVY — NAVAL FACILITIES ENGINEERING COMMAND
COMPONENT NAME: NAVAL FACILITIES ENGINEERING COMMAND ~ AGENCY
BASE - CITY STATE: BETHESDA, MD
PROJECT STATION/INSTALLATION: P125 - TEMPORARY MEDICAL FACILITIES PACKAGE 2 - CLINIC BUILDING

ELECTRICAL - POWER PLAN - SECOND FLOOR - AREA A

SCALE: 1/8" = 1'-0"
EPROJECT NO.: 1151333
CONSTR. CONTR. NO.: N62470-09-D-9044
NAVFAC DRAWING NO.: 13066083
SHEET EP-102-A OF 0

KEY PLAN

D
C
B A

C:\vvk19127A-MEP-F2-CENTRAL_bonglaud.rvt 3/19/2014 4:15:13 PM

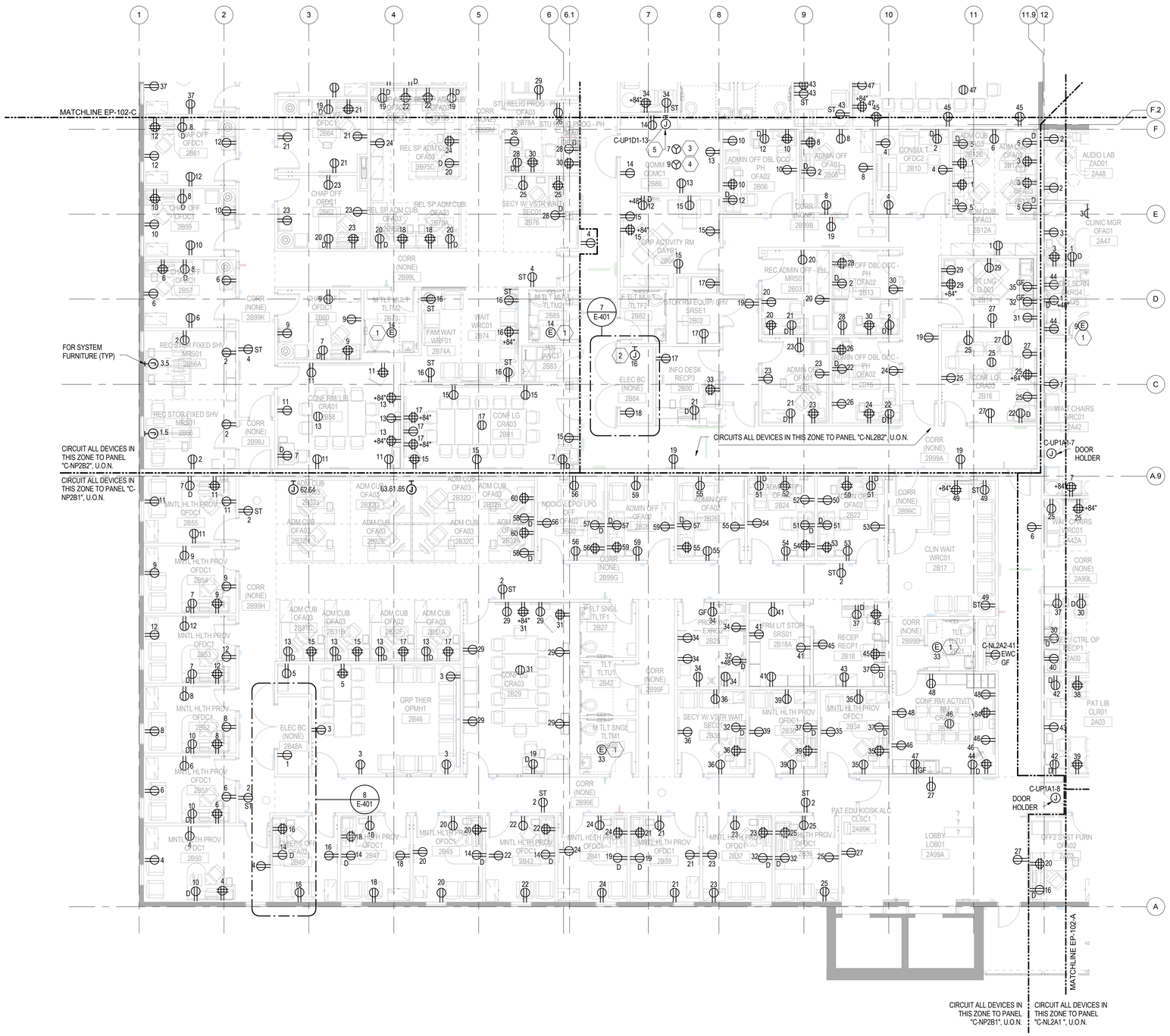

1 ELECTRICAL - POWER PLAN - SECOND FLOOR - AREA B

1/8" = 1'-0"

0 4'-0" 8'-0" 16'-0"

GENERAL NOTES:

A. REFER TO SHEETS E-001 & E-002 FOR LEGENDS, SYMBOLS AND ABBREVIATIONS.

B. REFER TO SHEET E-652 FOR FEEDER, TRANSFORMER AND MOTOR STARTER SCHEDULES.

KEYED NOTES:

1. CONNECT TO ELECTRICAL FLUSHING SYSTEM IN THIS ROOM. COORDINATE WITH PLUMBING DRAWINGS FOR FINAL DEVICES COUNT AND LOCATION INFORMATION.
2. JUNCTION BOX FOR FIRE ALARM PANEL. REFER TO FIRE ALARM DRAWINGS FOR FINAL LOCATION AND MOUNTING HEIGHT INFORMATION.
3. L5-20R RECEPTACLE. CIRCUIT. REFER TO COMMUNICATION DRAWINGS FOR FINAL LOCATION INFORMATION.
4. L5-30R RECEPTACLE. CIRCUIT. REFER TO COMMUNICATION DRAWINGS FOR FINAL LOCATION INFORMATION.
5. CONNECT TO JUNCTION BOX FOR SECURITY PANEL. REFER TO SECURITY DRAWINGS FOR FINAL LOCATION AND MOUNTING HEIGHT INFORMATION.

SYM	DESCRIPTION	DATE
	FINAL CORRECTED SET	03/26/14
	100% FINAL DESIGN SUBMISSION	02/14/14
	65% VE SUBMISSION	11/25/13
	65% SUBMITTAL	04/26/13
	35% SUBMITTAL	03/08/13

NAVFAC

STATE OF MARYLAND — DAVID C. BECHTOLD — REGISTERED PROFESSIONAL ENGINEER — NO. 15015 — 3/26/14

HDR

ARCHITECTURE | ENGINEERING & CONSULTING

1101 KING STREET
SUITE 400
ALEXANDRIA, VIRGINIA 22314
703-518-8500

APPROVED

FOR COMMANDER NAVFAC

ACTIVITY

SATISFACTORY TO DATE

DES	AE	DRW	HN	CHK	GK

PM/DM: CHEMENJU/HILL

BRANCH MANAGER: N/A

CHIEF ENG/ARCH: TOM COX

DEPARTMENT OF THE NAVY: NAVAL FACILITIES ENGINEERING COMMAND

COMPONENT NAME: NAVAL FACILITIES ENGINEERING COMMAND ~ AGENCY

BASE - CITY, STATE: BETHESDA, MD

PROJECT STATION/INSTALLATION: P125 - TEMPORARY MEDICAL FACILITIES PACKAGE 2 - CLINIC BUILDING

ELECTRICAL - POWER PLAN - SECOND FLOOR - AREA B

SCALE: 1/8" = 1'-0"

EPROJECT NO.: 1151333

CONSTR. CONTR. NO.: N62470-09-D-9044

NAVFAC DRAWING NO.: 13066084

SHEET EP-102-B OF 0

D
C
B A

KEY PLAN

C:\vrt\191274-MEP-F2-CENTRAL_tpongaud.rvt 3/19/2014 4:15:18 PM

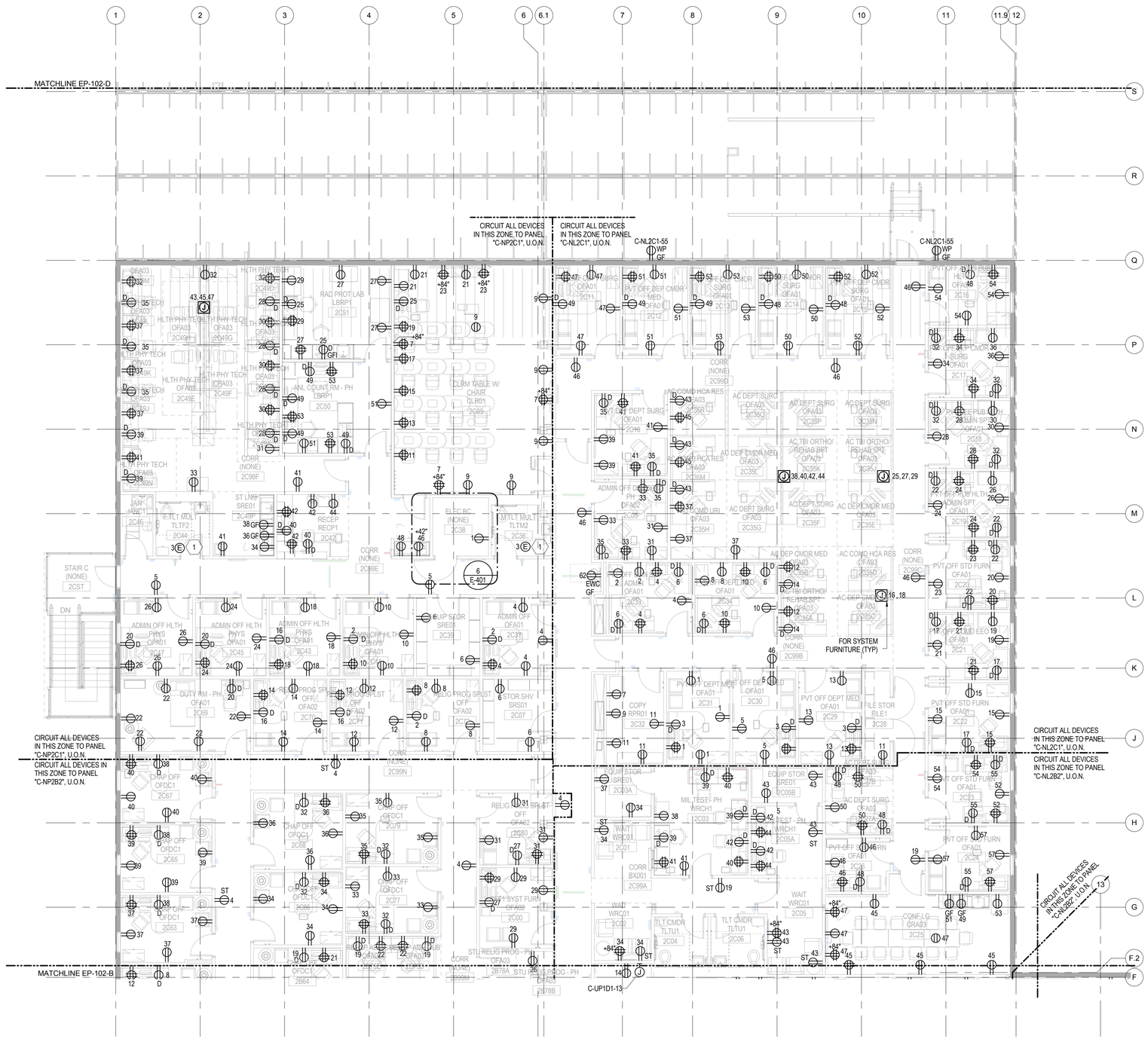

1 ELECTRICAL - POWER PLAN - SECOND FLOOR - AREA C

1/8" = 1'-0"

0 4'-0" 8'-0" 16'-0"

GENERAL NOTES:

A. REFER TO SHEETS E-001 & E-002 FOR LEGENDS, SYMBOLS AND ABBREVIATIONS.

B. REFER TO SHEET E-652 FOR FEEDER, TRANSFORMER AND MOTORE STARTER SCHEDULES.

KEYED NOTES:

1 CONNECT TO ELECTRICAL FLUSHING SYSTEM IN THIS ROOM. COORDINATE WITH PLUMBING DRAWINGS FOR FINAL DEVICES COUNT AND LOCATION INFORMATION.

SYM	DESCRIPTION	DATE
	FINAL CORRECTED SET	03/26/14
	100% FINAL DESIGN SUBMISSION	02/14/14
	65% VE SUBMISSION	11/25/13
	35% SUBMITTAL	03/08/13

NAVFAC

STATE OF MARYLAND — PAUL C. BECHTOLD — REGISTERED PROFESSIONAL ENGINEER — No. 15000 — 03/26/14

HDR

ARCHITECTURE | ENGINEERING & CONSULTING

1101 KING STREET
SUITE 400
ALEXANDRIA, VIRGINIA 22314
703-518-8500

APPROVED

FOR COMMANDER NAVFAC

ACTIVITY

SATISFACTORY TO DATE

DES	AE	DRW	HN	CHK	KM

PM/DM: CHEMENJU/HILL

BRANCH MANAGER: N/A

CHIEF ENG/ARCH: TOM COX

DEPARTMENT OF THE NAVY
NAVAL FACILITIES ENGINEERING COMMAND
COMPONENT NAME: NAVAL FACILITIES ENGINEERING COMMAND – AGENCY
BASE - CITY, STATE: BETHESDA, MD
PROJECT STATION/INSTALLATION
P125 - TEMPORARY MEDICAL FACILITIES
PACKAGE 2 - CLINIC BUILDING

ELECTRICAL - POWER PLAN - SECOND FLOOR - AREA C

SCALE: 1/8" = 1'-0"

EPROJECT NO: 1151333

CONSTR. CONTR. NO. N62470-09-D-9044

NAVFAC DRAWING NO. 13066085

SHEET 0 OF 0

EP-102-C

D
C
B A

KEY PLAN

C:\hr\191274-MEP-F2-CENTRAL_tpongsud.rvt 3/19/2014 4:15:23 PM

GENERAL NOTES:

A. REFER TO SHEETS E-001 & E-002 FOR LEGENDS, SYMBOLS AND ABBREVIATIONS.
B. REFER TO SHEET E-652 FOR MOTOR STARTER, FEEDER AND TRANSFORMER SCHEDULES.
C. ALL ROOF EQUIPMENT, PANELS AND FIXTURES SHALL BE WEATHERPROOF.
D. ALL ELECTRICAL EQUIPMENT ON ROOF SHALL BE NEMA 3R ENCLOSURES.

KEYED NOTES:

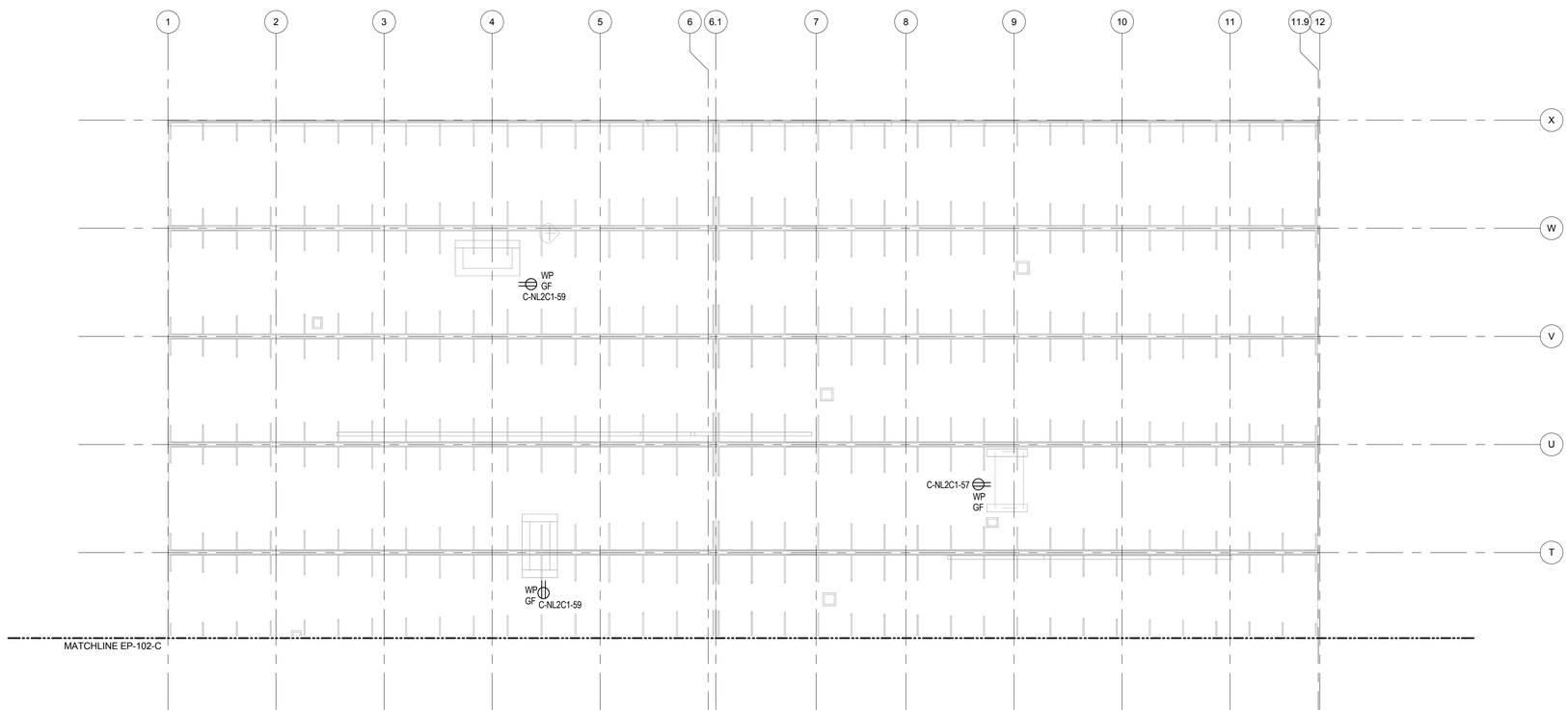

1 ELECTRICAL - POWER PLAN - SECOND FLOOR - AREA D
1/8" = 1'-0"

0 4'-0" 8'-0" 16'-0"

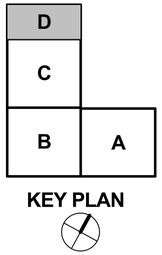

KEY PLAN

SYM	DESCRIPTION	DATE
	FINAL CORRECTED SET	03/26/14
	100% FINAL DESIGN SUBMISSION	02/14/14
	65% VE SUBMISSION	11/25/13
	35% SUBMITTAL	03/08/13

STATE OF MARYLAND
DAVID C. BECHTOLD
No. 15090
PROFESSIONAL ENGINEER
3/26/14

HDR
ARCHITECTURE | ENGINEERING & CONSULTING
1101 KING STREET
SUITE 400
ALEXANDRIA, VIRGINIA 22314
703-518-8500

APPROVED
FOR COMMANDER NAVFAC
ACTIVITY
SATISFACTORY TO DATE

DES	AE	DRW	HN	CHK	GK
PM/DM	CHEMENJU/HILL				
BRANCH MANAGER	N/A				
CHIEF ENG/ARCH	TOM COX				

DEPARTMENT OF THE NAVY
NAVAL FACILITIES ENGINEERING COMMAND
COMPONENT NAME
NAVAL FACILITIES ENGINEERING COMMAND ~ AGENCY
BASE, CITY, STATE
BETHESDA, MD
PROJECT STATION/INSTALLATION
P125 - TEMPORARY MEDICAL FACILITIES
PACKAGE 2 - CLINIC BUILDING
ELECTRICAL - POWER PLAN - SECOND FLOOR - AREA D

SCALE: 1/8" = 1'-0"
EPROJECT NO.: 1151333
CONSTR. CONTR. NO. N62470-09-D-9044
NAVFAC DRAWING NO. 13066086
SHEET OF 0

EP-102-D

C:\vrt\191274-MEP-F2-CENTRAL_tpongsud.rvt 3/19/2014 4:15:28 PM

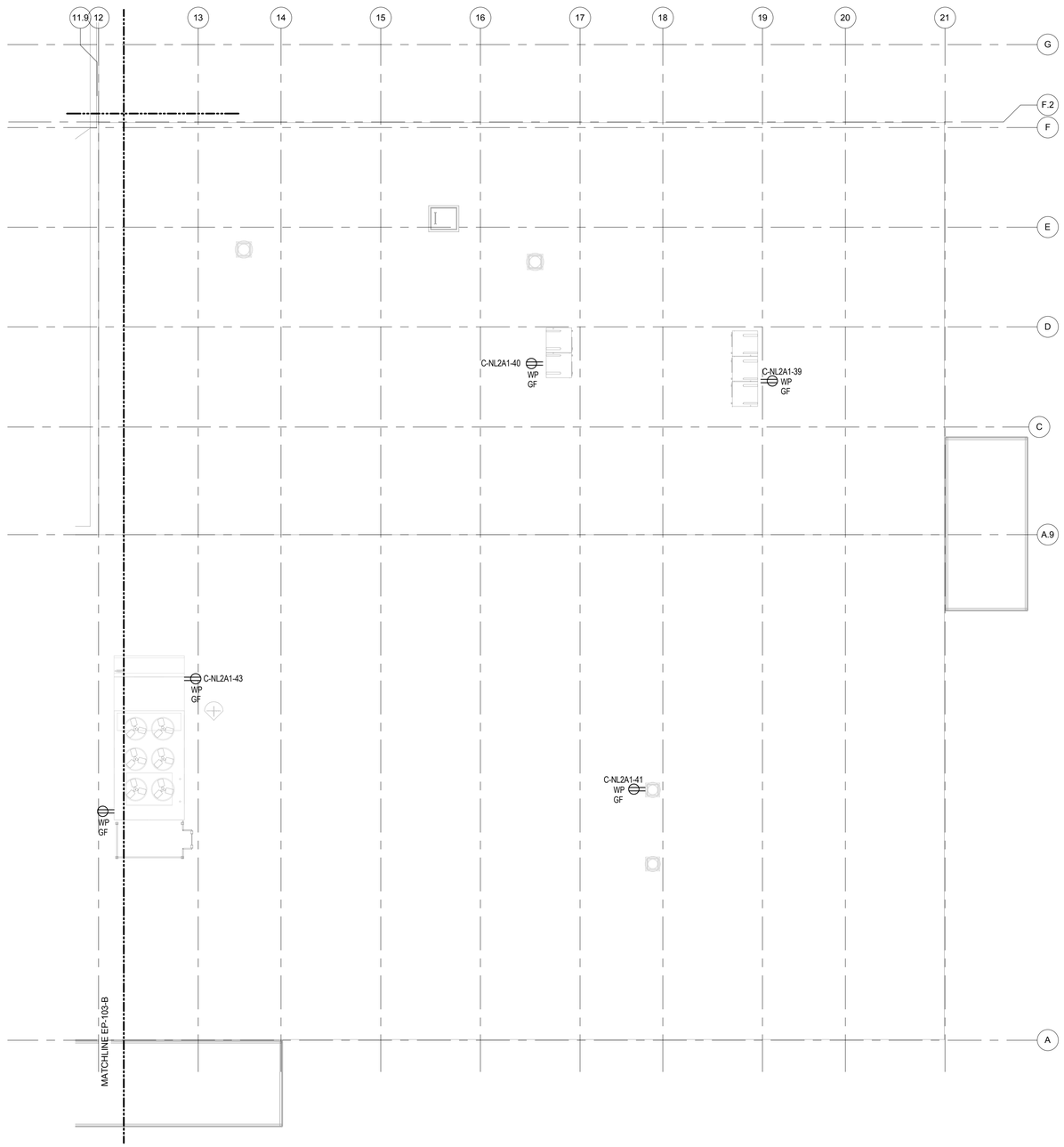

1 ELECTRICAL - POWER PLAN - ROOF PLAN - AREA A

1/8" = 1'-0"

0 4'-0" 8'-0" 16'-0"

GENERAL NOTES:

A. REFER TO SHEETS E-001 & E-002 FOR LEGENDS, SYMBOLS AND ABBREVIATIONS.
B. REFER TO SHEET E-652 FOR MOTOR STARTER, FEEDER AND TRANSFORMER SCHEDULES.
C. ALL ROOF EQUIPMENT, PANELS AND FIXTURES SHALL BE WEATHERPROOF.
D. ALL ELECTRICAL EQUIPMENT ON ROOF SHALL BE NEMA 3R ENCLOSURES.

KEYED NOTES:

SYM	DESCRIPTION	DATE
	FINAL CORRECTED SET	03/26/14
	100% FINAL DESIGN SUBMISSION	02/14/14
	65% VE SUBMISSION	11/25/13
	35% SUBMITTAL	03/08/13

NAVFAC

STATE OF MARYLAND
PAUL C. BECHTOLD
No. 15000
REGISTERED PROFESSIONAL ENGINEER
3/26/14

HDR

ARCHITECTURE | ENGINEERING & CONSULTING

1101 KING STREET
SUITE 400
ALEXANDRIA, VIRGINIA 22314
703-518-8500

APPROVED

FOR COMMANDER NAVFAC

ACTIVITY

SATISFACTORY TO DATE

DES KM DRW KM CHK GK
PMDM CHEMENJU/HILL
BRANCH MANAGER N/A
CHIEF ENGIARCH TOM COX

DEPARTMENT OF THE NAVY
NAVAL FACILITIES ENGINEERING COMMAND
COMPONENT NAME: NAVAL FACILITIES ENGINEERING COMMAND ~ AGENCY
BASE : CITY STATE
PROJECT STATION/INSTALLATION
BETHESDA, MD
P125 - TEMPORARY MEDICAL FACILITIES
PACKAGE 2 - CLINIC BUILDING
ELECTRICAL - POWER PLAN - ROOF PLAN - AREA A

SCALE: 1/8" = 1'-0"
EPROJECT NO.: 1151333
CONSTR. CONTR. NO. N62470-09-D-9044
NAVFAC DRAWING NO. 13066087
SHEET OF 0

EP-103-A

D	
C	
B	A

KEY PLAN

C:\vdr\19127A-MEP-F2-CENTRAL_bpongaud.rvt 3/19/2014 4:15:30 PM

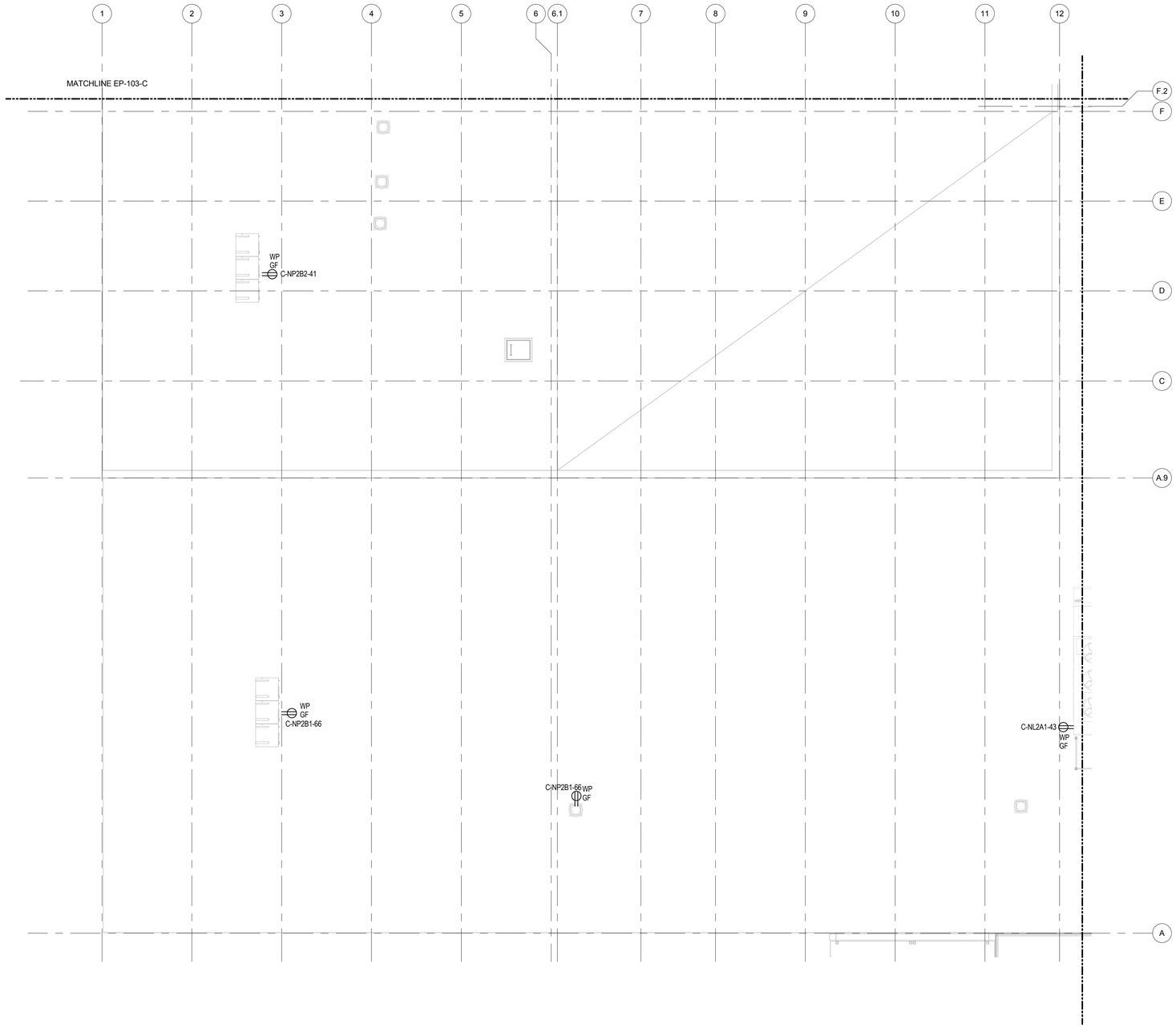

1 ELECTRICAL - POWER PLAN - ROOF PLAN - AREA B

1/8" = 1'-0"

GENERAL NOTES:

A. REFER TO SHEETS E-001 & E-002 FOR LEGENDS, SYMBOLS AND ABBREVIATIONS.
B. REFER TO SHEET E-652 FOR MOTOR STARTER, FEEDER AND TRANSFORMER SCHEDULES.
C. ALL ROOF EQUIPMENT, PANELS AND FIXTURES SHALL BE WEATHERPROOF.
D. ALL ELECTRICAL EQUIPMENT ON ROOF SHALL BE NEMA 3R ENCLOSURES.

KEYED NOTES:

SYM	DESCRIPTION	DATE
	FINAL CORRECTED SET	03/26/14
	100% FINAL DESIGN SUBMISSION	02/14/14
	65% VE SUBMISSION	11/25/13
	35% SUBMITTAL	03/08/13

STATE OF MARYLAND
DAVID C. BECHTOLD
No. 15090
PROFESSIONAL ENGINEER
3/26/14

HDR
ARCHITECTURE | ENGINEERING & CONSULTING
1101 KING STREET
SUITE 400
ALEXANDRIA, VIRGINIA 22314
703-518-8500

APPROVED
FOR COMMANDER NAVFAC
ACTIVITY
SATISFACTORY TO DATE

DES	KM	DRW	KM	CHK	GK
PM/DM	CHEMENJU/HILL				
BRANCH MANAGER	N/A				
CHIEF ENG/ARCH	TOM COX				

DEPARTMENT OF THE NAVY
NAVAL FACILITIES ENGINEERING COMMAND
COMPONENT NAME:
NAVAL FACILITIES ENGINEERING COMMAND ~ AGENCY
BASE - CITY STATE
BETHESDA, MD
PROJECT STATION/INSTALLATION
P125 - TEMPORARY MEDICAL FACILITIES
PACKAGE 2 - CLINIC BUILDING
ELECTRICAL - POWER PLAN - ROOF PLAN - AREA B

SCALE: 1/8" = 1'-0"
EPROJECT NO.: 1151333
CONSTR. CONTR. NO. N62470-09-D-9044
NAVFAC DRAWING NO. 13066088
SHEET 0 OF 0

EP-103-B

KEY PLAN

C:\nvk19127\4-MEP-F2-CENTRAL_bpongaud.rvt 3/19/2014 4:15:33 PM

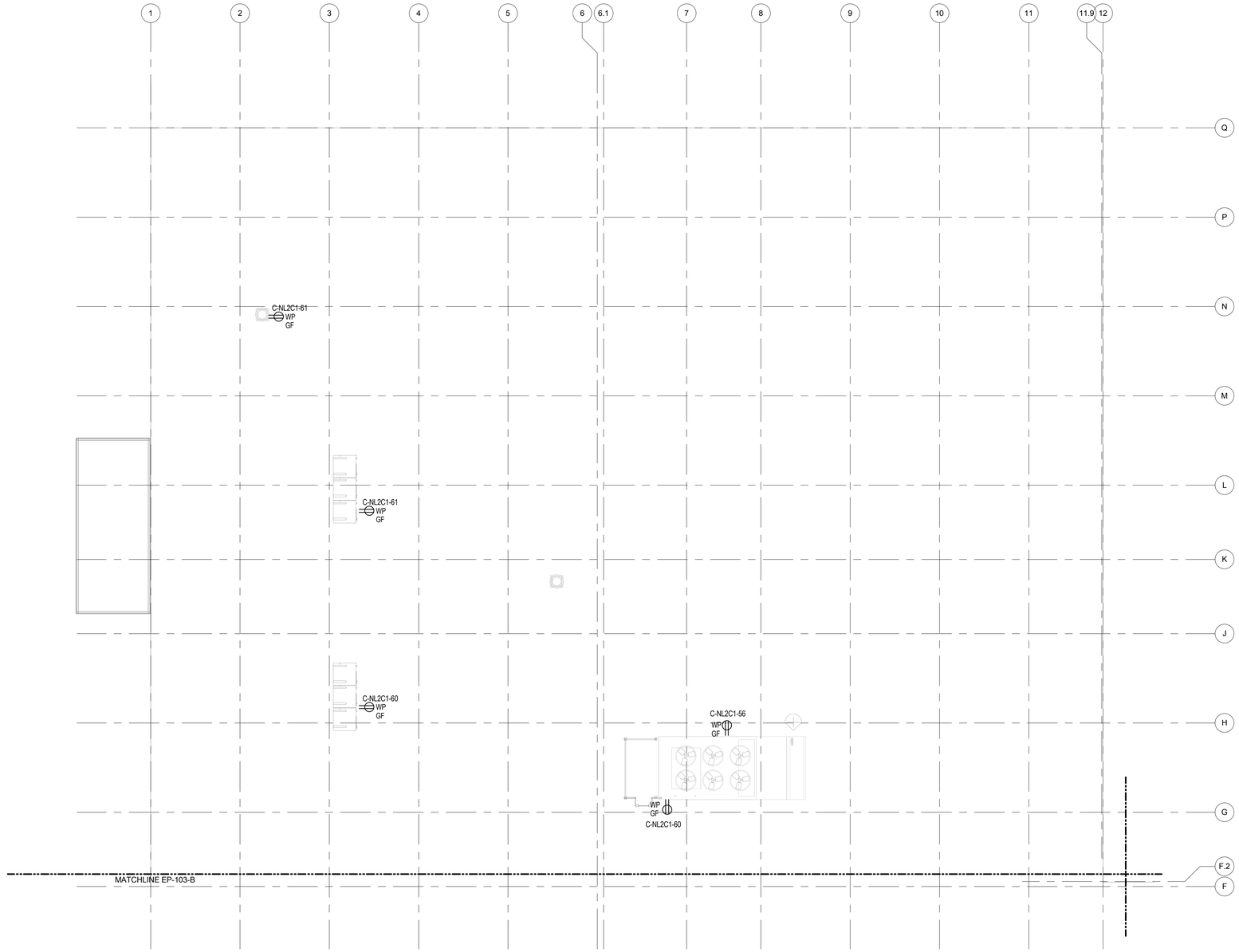

1 ELECTRICAL - POWER PLAN - ROOF PLAN - AREA C

1/8" = 1'-0"

0 4'-0" 8'-0" 16'-0"

GENERAL NOTES:

A. REFER TO SHEETS E-001 & E-002 FOR LEGENDS, SYMBOLS AND ABBREVIATIONS.
B. REFER TO SHEET E-652 FOR MOTOR STARTER, FEEDER AND TRANSFORMER SCHEDULES.
C. ALL ROOF EQUIPMENT, PANELS AND FIXTURES SHALL BE WEATHERPROOF.
D. ALL ELECTRICAL EQUIPMENT ON ROOF SHALL BE NEMA 3R ENCLOSURES.

KEYED NOTES:

SYM	DESCRIPTION	DATE
	FINAL CORRECTED SET	03/26/14
	100% FINAL DESIGN SUBMISSION	02/14/14
	65% VE SUBMISSION	11/25/13
	35% SUBMITTAL	03/08/13

NAVFAC

STATE OF MARYLAND
DAVID C. BECHTOLD
No. 15000
PROFESSIONAL ENGINEER
3/26/14

HDR

ARCHITECTURE | ENGINEERING & CONSULTING
1101 KING STREET
SUITE 400
ALEXANDRIA, VIRGINIA 22314
703-518-8500

APPROVED
FOR COMMANDER NAVFAC

ACTIVITY
SATISFACTORY TO DATE

DES	KM	DRW	KM	CHK	GK

PM/DM: CHEMENJU/HILL
BRANCH MANAGER: N/A
CHIEF ENG/ARCH: TOM COX

DEPARTMENT OF THE NAVY
NAVAL FACILITIES ENGINEERING COMMAND ~ AGENCY
COMPONENT NAME
NAVAL FACILITIES ENGINEERING COMMAND
BASE - CITY, STATE
BETHESDA, MD
PROJECT STATION/INSTALLATION
P125 - TEMPORARY MEDICAL FACILITIES
PACKAGE 2 - CLINIC BUILDING
ELECTRICAL - POWER PLAN - ROOF PLAN - AREA C

SCALE: 1/8" = 1'-0"
EPROJECT NO.: 1151333
CONSTR. CONTR. NO. N62470-09-D-9044
NAVFAC DRAWING NO. 13066089
SHEET OF 0

EP-103-C

D
C
B A
KEY PLAN

C:\vrt\191274-MEP-F2-CENTRAL_bpongaud.rvt 3/19/2014 4:15:38 PM

GENERAL NOTES:

A. REFER TO SHEETS E-001 & E-002 FOR LEGENDS, SYMBOLS AND ABBREVIATIONS.
B. REFER TO SHEET E-652 FOR FEEDER, TRANSFORMER AND MOTOR STARTER SCHEDULES.
C. REFER TO SHEET E-602 FOR GROUNDING INFORMATION.
D. REFER TO SHEET E-501 FOR SWITCHBOARD 'C-ND1D1', UPS 'C-UPSD1' AND LIGHTING INVERTER ELEVATIONS.

KEYED NOTES:

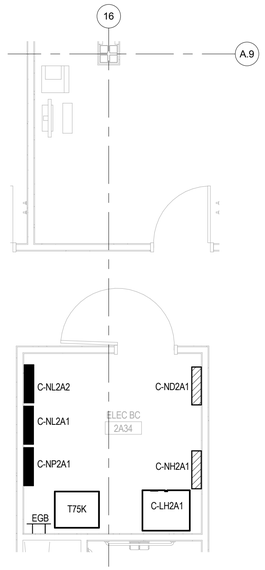

9 ELECTRICAL ROOM 2A34
1/4" = 1'-0"
0 2'-0" 4'-0" 8'-0"

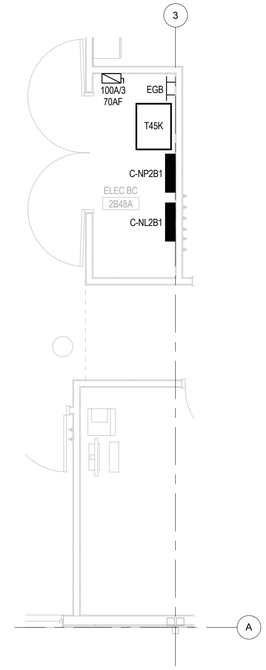

8 ELECTRICAL ROOM 2B48A
1/4" = 1'-0"
0 2'-0" 4'-0" 8'-0"

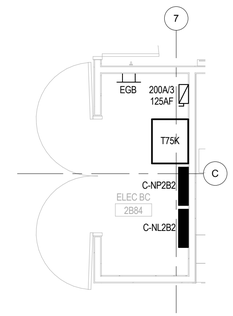

7 ELECTRICAL ROOM 2B84
1/4" = 1'-0"
0 2'-0" 4'-0" 8'-0"

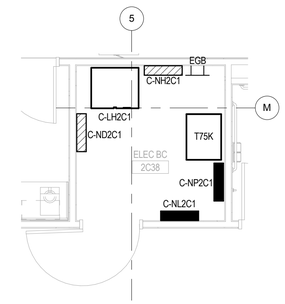

6 ELECTRICAL ROOM 2C38
1/4" = 1'-0"
0 2'-0" 4'-0" 8'-0"

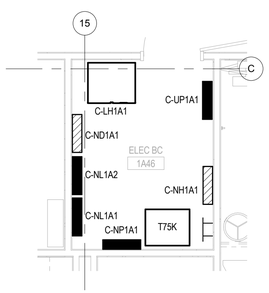

5 ELECTRICAL ROOM 1A46
1/4" = 1'-0"
0 2'-0" 4'-0" 8'-0"

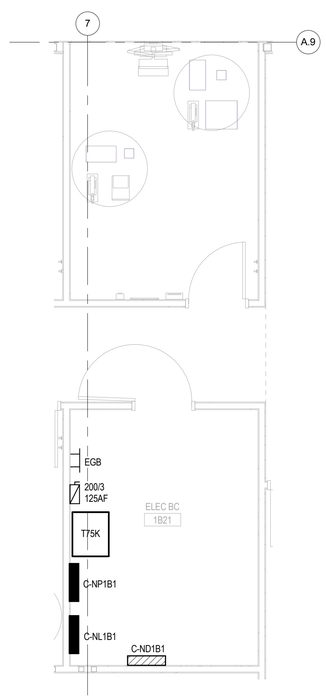

4 ELECTRICAL ROOM 1B27
1/4" = 1'-0"
0 2'-0" 4'-0" 8'-0"

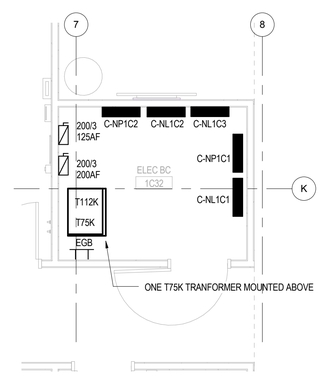

2 ELECTRICAL ROOM 1C32
1/4" = 1'-0"
0 2'-0" 4'-0" 8'-0"

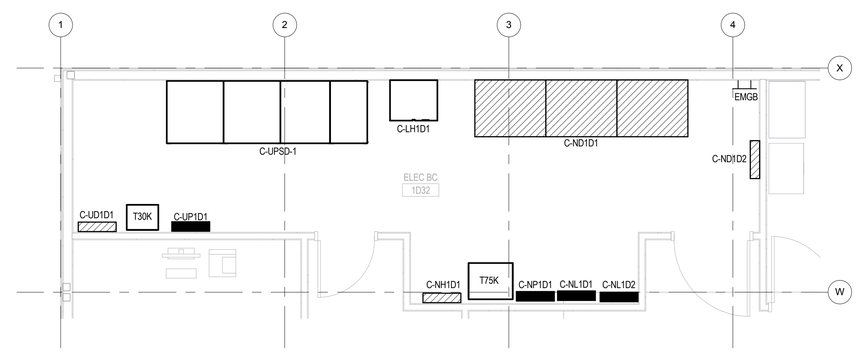

1 ELECTRICAL ROOM 1D32
1/4" = 1'-0"
0 2'-0" 4'-0" 8'-0"

SYM	DESCRIPTION	DATE
	FINAL CORRECTED SET	03/26/14
	100% FINAL DESIGN SUBMISSION	02/14/14
	65% VE SUBMISSION	11/25/13
	35% SUBMITTAL	03/08/13

NAVFAC

STATE OF MARYLAND — PAUL G. TRUMPINE — REGISTERED PROFESSIONAL ENGINEER — NO. 15-15-90-0 — 3/26/14

HDR
ARCHITECTURE | ENGINEERING & CONSULTING
1101 KING STREET
SUITE 400
ALEXANDRIA, VIRGINIA 22314
703-518-8500

APPROVED
FOR COMMANDER NAVFAC
ACTIVITY
SATISFACTORY TO DATE

DES	KM	DRW KM	CHK GK
PM/DM	CHEMENJU/HILL		
BRANCH MANAGER	N/A		
CHIEF ENG/ARCH	TOM COX		

DEPARTMENT OF THE NAVY
NAVAL FACILITIES ENGINEERING COMMAND
COMPONENT NAME: NAVAL FACILITIES ENGINEERING COMMAND ~ AGENCY
BASE, CITY, STATE: BETHESDA, MD
PROJECT STATION/INSTALLATION
P125 - TEMPORARY MEDICAL FACILITIES
PACKAGE 2 - CLINIC BUILDING
ELECTRICAL - ENLARGED PLANS

SCALE: 1/4" = 1'-0"
EPROJECT NO.: 1151333
CONSTR. CONTR. NO.: N62470-09-D-9044
NAVFAC DRAWING NO.: 13066090
SHEET E-401 OF 0

C:\vrf\191274-MEP-F2-CENTRAL_tpongsud.rvt 3/19/2014 4:12:14 PM

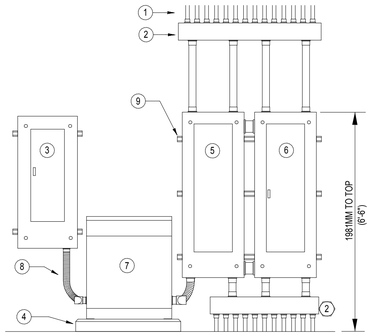

NOTES:

1. BRANCH CIRCUIT CONDUIT AS REQUIRED.
2. WIREWAY. SIZE AS REQUIRED.
3. 480Y/277 VOLT PANELBOARD.
4. CONCRETE TRANSFORMER PAD.
5. 208Y/120 VOLT PANELBOARD.
6. 208Y/120 VOLT PANELBOARD AS REQUIRED.
7. 480 - 208Y/120 VOLT TRANSFORMER.
8. FLEXIBLE CONDUIT SIZE AS REQUIRED. REFER TO TRANSFORMER SCHEDULE FOR SIZE.
9. PANELBOARD MOUNTING SUPPORT. MINIMUM 2 FOR PANELS UP TO 48" LONG. 3 FOR PANELS LONGER THAN 48".

6 PANELBOARD MOUNTING DETAIL

N.T.S.

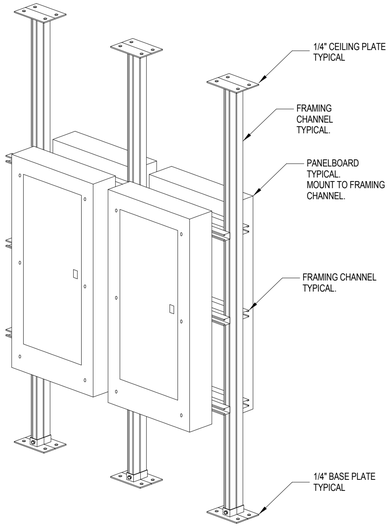

PROVIDE ALL MOUNTING HARDWARE AND FASTENERS AS RECOMMENDED BY MANUFACTURER.

5 PANEL SUPPORT DETAIL

N.T.S.

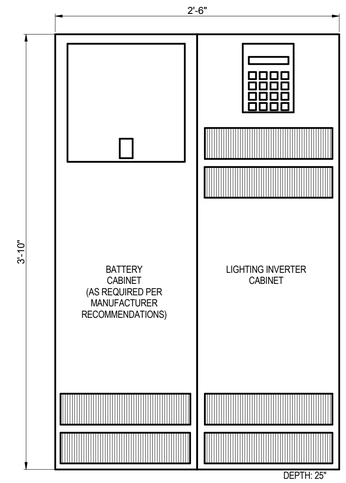

TYPICAL FOR 'C-LH1D1', 'C-LH1A1', 'C-LH2C1' AND 'C-LH2A1'. REFER TO SHEETS E-401 AND E-601 FOR MORE INFORMATION. ALL LIGHTING INVERTERS SHALL INCLUDE A 90-MIN BATTERY BACKUP.

4 LIGHTING INVERTER ELEVATION

N.T.S.

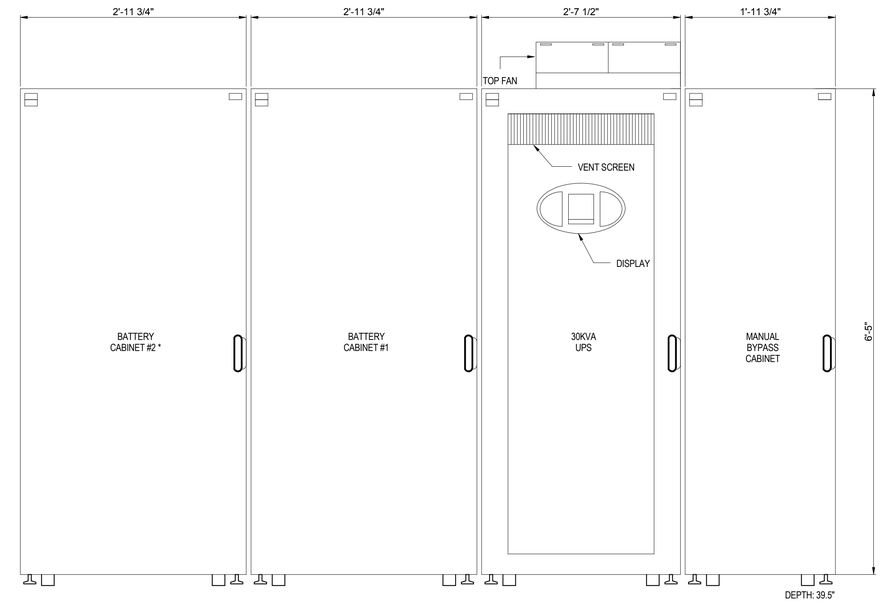

NOTES:

* ADDITIONAL BATTERY CABINETS AS REQUIRED TO ACHIEVE 90 MINUTES BATTERY BACKUP.

3 UPS 'C-UPSD1' ELEVATION

N.T.S.

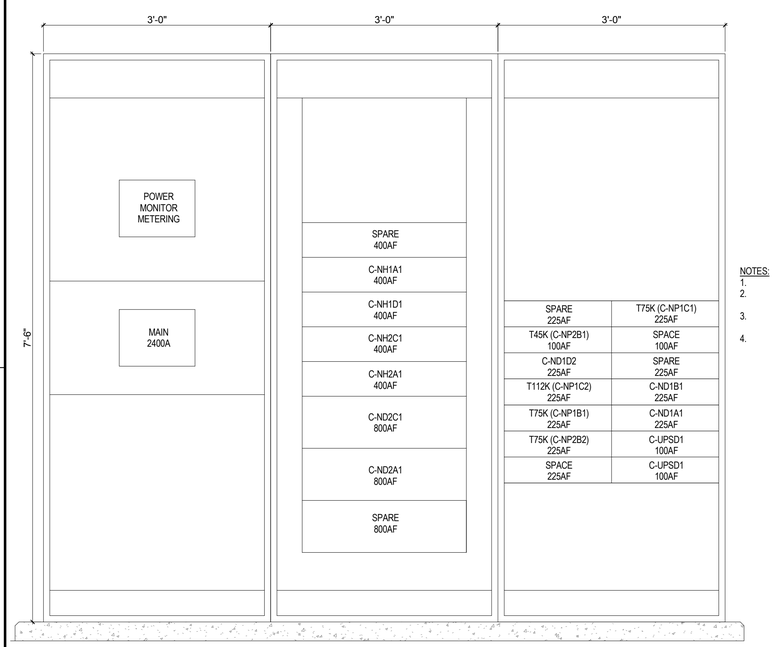

NOTES:

1. MAIN BREAKER SHALL BE GFP.
2. SWITCHBOARD 'C-ND1D1' SHALL BE FRONT ACCESS.
3. SWITCHBOARD 'C-ND1D1'SHALL BE BOTTOM FEED.
4. DEPTH OF SWITCHBOARD 'C-ND1D1' IS 36".

2 SWITCHBOARD 'C-ND1D1' ELEVATION

N.T.S.

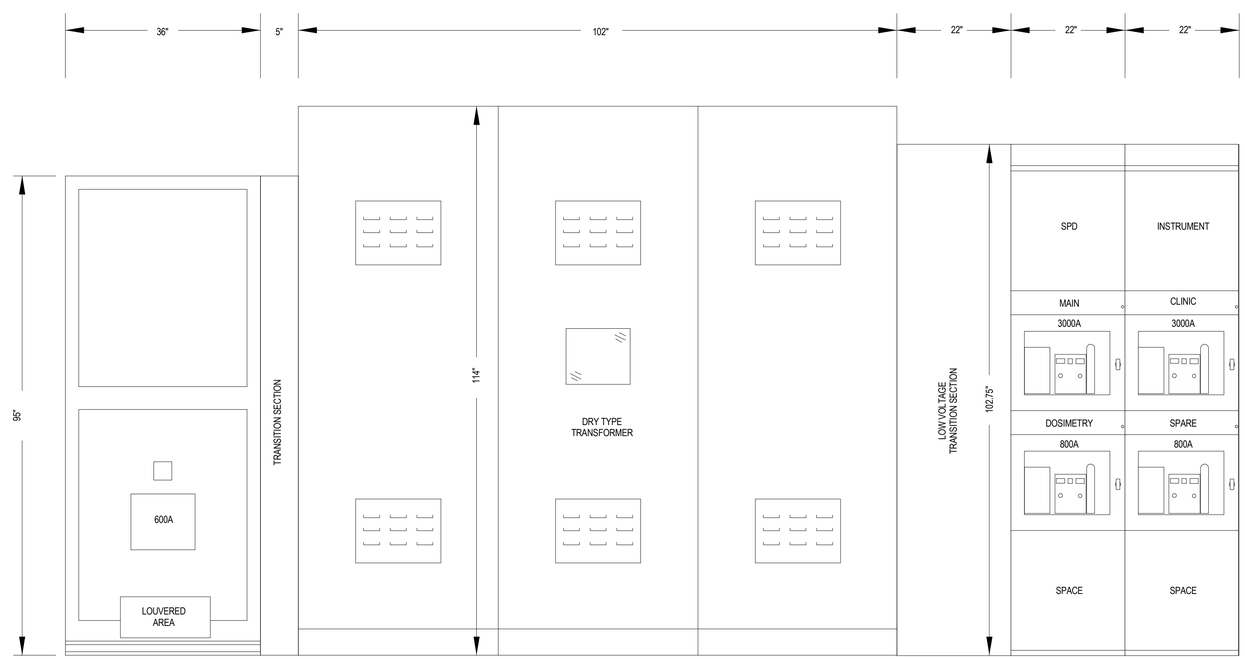

NOTES:

1. REFER TO PACKAGE 1 - NAVAL DOSIMETRY CENTER AND SITE UTILITIES FOR MORE INFORMATION.

1 EXISTING UNIT SUBSTATION ELEVATION

N.T.S.

SYM	DESCRIPTION	DATE
	FINAL CORRECTED SET	03/26/14
	100% FINAL DESIGN SUBMISSION	02/14/14
	65% VE SUBMISSION	11/25/13

NAVFAC

STATE OF MARYLAND — DAVID C. BECHTOLD — No. 15000 — PROFESSIONAL ENGINEER — 3/26/14

HDR

ARCHITECTURE | ENGINEERING & CONSULTING
1101 KING STREET
SUITE 400
ALEXANDRIA, VIRGINIA 22314
703-518-8500

APPROVED

FOR COMMANDER NAVFAC

ACTIVITY

SATISFACTORY TO DATE

DES	KM	DRW KM	CHK GK
PM/DM	CHEMENJU/HILL		
BRANCH MANAGER	N/A		
CHIEF ENG/ARCH	TOM COX		

DEPARTMENT OF THE NAVY
NAVAL FACILITIES ENGINEERING COMMAND
COMPONENT NAME
NAVAL FACILITIES ENGINEERING COMMAND ~ AGENCY
BASE, CITY, STATE
BETHESDA, MD
PROJECT STATION/INSTALLATION
P125 - TEMPORARY MEDICAL FACILITIES
PACKAGE 2 - CLINIC BUILDING
ELECTRICAL DETAILS

SCALE: As indicated
EPROJECT NO.: 1151333
CONSTR. CONTR. NO.: N62470-09-D-9044
NAVFAC DRAWING NO.: 13066091
SHEET 0 OF 0

E-501

C:\vrt\191274-MEP-F2-CENTRAL_bpongsud.rvt 3/19/2014 4:12:17 PM

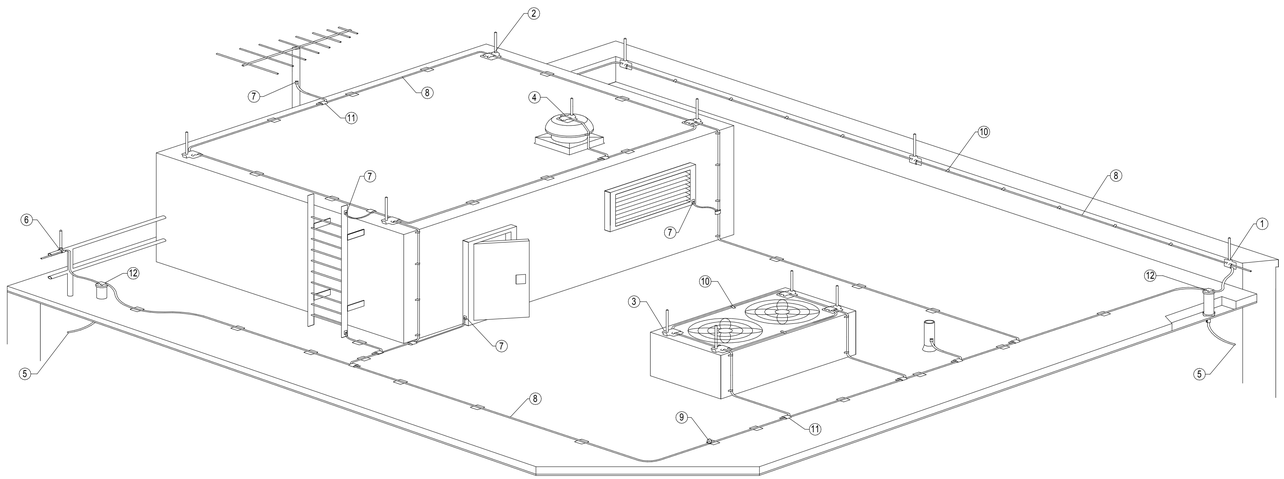

BONDING DETAILS AND AIR TERMINAL LOCATIONS SHOWN ARE TYPICAL, GENERAL EXAMPLES ONLY. FINAL EXTENT OF BONDING AND SPECIFIC FITTING APPLICATIONS TO BE DETERMINED IN FIELD BASED ON ACTUAL SITE CONDITIONS.

NOTES:

1. VERTICALLY MOUNTED AIR TERMINAL ON PARAPET SPACE 20 FEET (6096MM) MAXIMUM. SEE AIR TERMINAL DETAIL.
2. HORIZONTALLY MOUNTED AIR TERMINAL ON ROOF SPACE 20 FEET (6096MM) MAXIMUM. SEE AIR TERMINAL DETAIL.
3. AIR TERMINALS MOUNTED ON MECHANICAL EQUIPMENT ENCLOSURE.
4. AIR TERMINAL MOUNTED ON EXHAUST FAN (`DEAD-END' METHOD).
5. LIGHTNING DOWN CONDUCTOR.
6. AIR TERMINAL MOUNTED ON GUARDRAIL WITH PIPE RAILING BASE.
7. BOND WINDOW, DOOR FRAMES, LADDERS, AND ANTENNAS, OR ANY METALLIC OBJECTS WITH BONDING LUGS AND SECONDARY CONDUCTOR.
8. MAIN LIGHTNING CONDUCTOR.
9. ADEHSIVE CABLE HOLDER EVERY 3 FEET (914MM) MAXIMUM SPACING.
10. CABLE CLIP WITH STAINLESS STEEL SCREWS EVERY 3 FEET (914MM) MAXIMUM SPACING.
11. CABLE CONNECTOR.
12. THRU-ROOF CONNECTOR.

2 TYPICAL ROOF LIGHTNING PROTECTION LAYOUT
N.T.S.

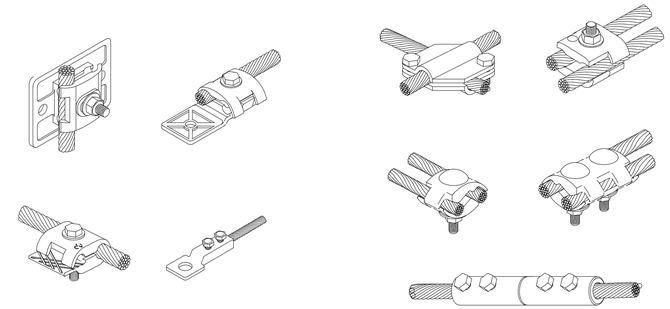

TYPICAL BONDING LUGS & PLATES **TYPICAL CABLE CONNECTORS**

4 BONDING LUGS & PLATES / CABLE CONNECTORS
N.T.S.

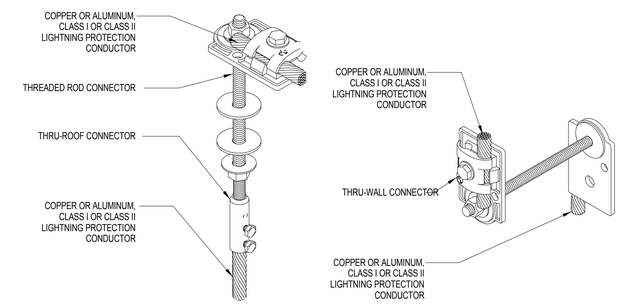

THRU-ROOF CONNECTOR **THRU-WALL CONNECTOR**

3 THRU ROOF/WALL CONNECTORS
N.T.S.

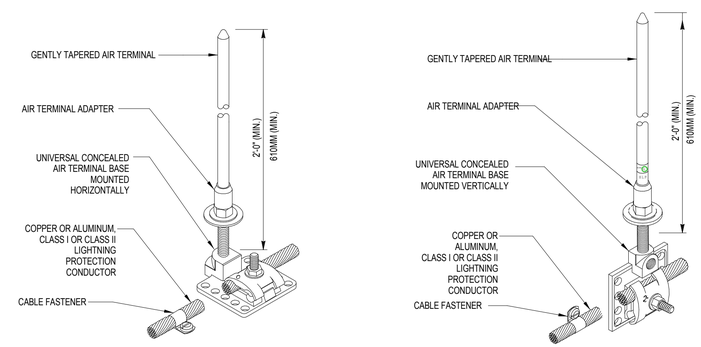

HORIZONTAL AIR TERMINAL BASE **VERTICAL AIR TERMINAL BASE**

1 AIR TERMINALS
N.T.S.

SYM	DESCRIPTION	DATE
	FINAL CORRECTED SET	03/26/14
	100% FINAL DESIGN SUBMISSION	02/14/14
	65% VE SUBMISSION	11/25/13

NAVFAC

STATE OF MARYLAND — DAVID C. BECHHOLD — No. 15000 — PROFESSIONAL ENGINEER — 3/26/14

HDR
ARCHITECTURE | ENGINEERING & CONSULTING
1101 KING STREET
SUITE 400
ALEXANDRIA, VIRGINIA 22314
703-518-8500

APPROVED
FOR COMMANDER NAVFAC
ACTIVITY
SATISFACTORY TO DATE

DES	KM	DRW	KM	CHK	GK
PM/DM	CHEMENJU/HILL				
BRANCH MANAGER	N/A				
CHIEF ENG/ARCH	TOM COX				

DEPARTMENT OF THE NAVY
NAVAL FACILITIES ENGINEERING COMMAND
COMPONENT NAME: NAVAL FACILITIES ENGINEERING COMMAND ~ AGENCY
BASE, CITY, STATE: BETHESDA, MD
PROJECT STATION/INSTALLATION
P125 - TEMPORARY MEDICAL FACILITIES
PACKAGE 2 - CLINIC BUILDING
ELECTRICAL DETAILS

SCALE: N.T.S.
EPROJECT NO. 1151333
CONSTR. CONTR. NO. N62470-09-D-9044
NAVFAC DRAWING NO. 13066092
SHEET OF 0
E-502

C:\n/61191274-MEP-F2-CENTRAL_tpongsud.rvt 3/19/2014 4:12:20 PM

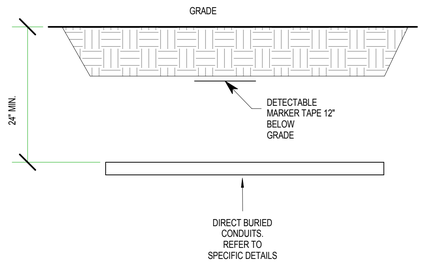

NOTES:

1. DUCT SHALL BE SCHEDULE 80 PVC EXCEPT WHERE RIGID GALVANIZED STEEL IS INDICATED.
2. PROVIDE DETECTABLE MARKER TAPE 12" (305mm) BELOW FINISH GRADE AND CENTERED ABOVE DUCT. TAPE SHALL HAVE APPROPRIATE LABELING FOR TYPE OF DUCT.

6 TYPICAL DUCT-BANK DETAIL

N.T.S.

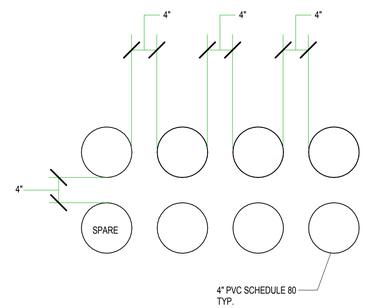

5 DIRECT BURIED CONDUITS - 2 x 4

N.T.S.

GENERAL NOTES:

A. REFER TO SHEET EG-100 FOR MORE GROUNDING INFORMATION.
B. REFER TO TELECOMM DRAWINGS FOR MORE TELECOMM GROUNDING INFORMATION AND TELECOMM GROUND BUS LOCATIONS.

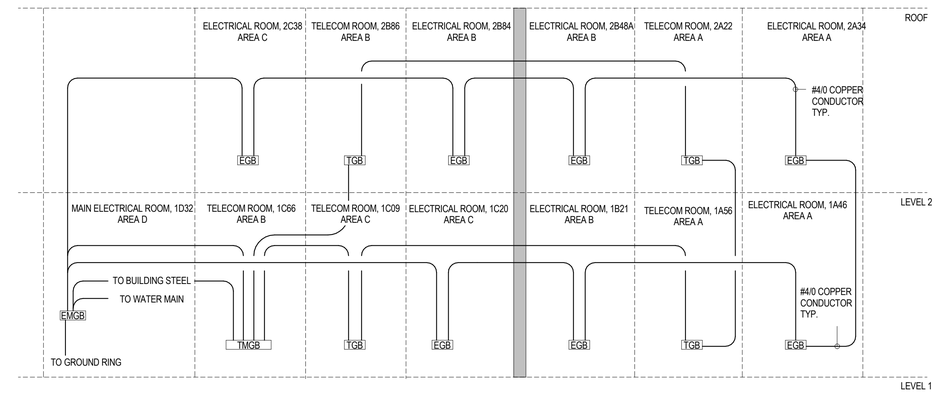

4 ELECTRICAL/TELECOM GROUNDING RISER DIAGRAM

12" = 1'-0"

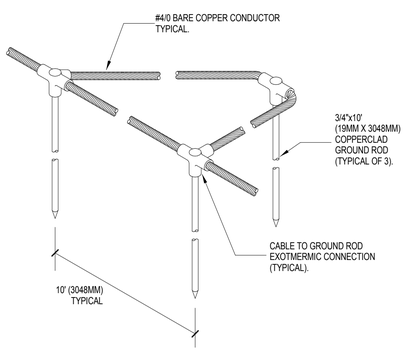

3 TYPICAL GROUND ARRAY

N.T.S.

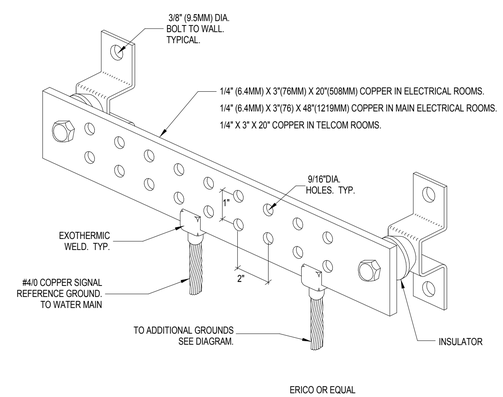

2 GROUND BUS DETAIL

N.T.S.

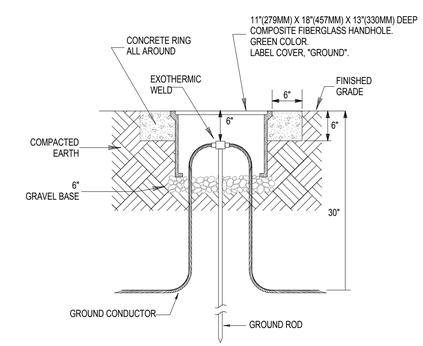

1 GROUND TEST WELL DETAIL

N.T.S.

SYM	DESCRIPTION	DATE
	FINAL CORRECTED SET	03/26/14
	100% FINAL DESIGN SUBMISSION	02/14/14
	65% VE SUBMISSION	11/25/13

NAVFAC

STATE OF MARYLAND — PAUL G. TOMMINO — No. 15050 — PROFESSIONAL ENGINEER — 3/26/14

HDR

ARCHITECTURE | ENGINEERING & CONSULTING
1101 KING STREET
SUITE 400
ALEXANDRIA, VIRGINIA 22314
703-518-8500

APPROVED

FOR COMMANDER NAVFAC

ACTIVITY

SATISFACTORY TO DATE

DES	KM	DRW	KM	CHK	GK
PMDM	CHEMENJU/HILL				
BRANCH MANAGER	N/A				
CHIEF ENG/ARCH	TOM COX				

DEPARTMENT OF THE NAVY
NAVAL FACILITIES ENGINEERING COMMAND
COMPONENT NAME
NAVAL FACILITIES ENGINEERING COMMAND – AGENCY
BASE, CITY, STATE
BETHESDA, MD
PROJECT STATION/INSTALLATION
P125 - TEMPORARY MEDICAL FACILITIES
PACKAGE 2 - CLINIC BUILDING
ELECTRICAL DETAILS

SCALE: As indicated
EPROJECT NO.: 1151333
CONSTR. CONTR. NO. N62470-09-D-9044
NAVFAC DRAWING NO. 13066093
SHEET OF 0

E-503

C:\n/61912744/MEP-F2-CENTRAL_bpongsud.rvt 3/19/2014 4:21:47 PM

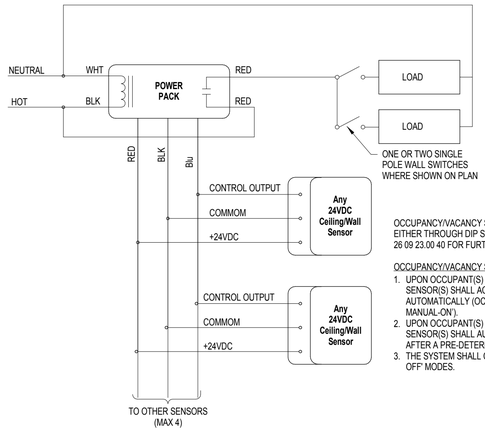

TYPE C, DUAL TECHNOLOGY PASSIVE INFRARED/ULTRA SONIC SENSOR, COVERAGE AREA 2000 S.F. MIN.

TYPE D, DUAL TECHNOLOGY PASSIVE INFRARED/ULTRA SONIC SENSOR, 90 FOOT LINEAR COVERAGE MIN.

OCCUPANCY/VACANCY SENSOR(S) SHALL BE PROVIDED WITH CAPABILITY TO OPERATE EITHER THROUGH DIP SWITCH SETTINGS OR OTHERWISE. SEE SPECIFICATION SECTION 26 09 23.00 40 FOR FURTHER DETAILS.

OCCUPANCY/VACANCY SENSOR(S) SEQUENCE OF OPERATION(S) IS TO BE AS FOLLOWS:

1. UPON OCCUPANT(S) ENTRY TO THE CONTROLLED AREA, OCCUPANT/VACANCY SENSOR(S) SHALL ACTIVATE ASSOCIATED LIGHTING FIXTURES EITHER AUTOMATICALLY (OCCUPANCY, 'AUTOMATIC-ON) OR MANUALLY (VACANCY, MANUAL-ON').
2. UPON OCCUPANT(S) LEAVING THE CONTROLLED AREA, OCCUPANCY/VACANCY SENSOR(S) SHALL AUTOMATICALLY SWITCH THE LIGHTS ('AUTOMATIC-OFF') AFTER A PRE-DETERMINED TIME DELAY OF NO MORE THAN 30 MINUTES.
3. THE SYSTEM SHALL CONTINUALLY OPERATE IN 'MANUAL-ON' AND 'AUTOMATIC-OFF' MODES.

3 OCCUPANCY/VACANCY SENSOR - TYPE C,D

N.T.S.

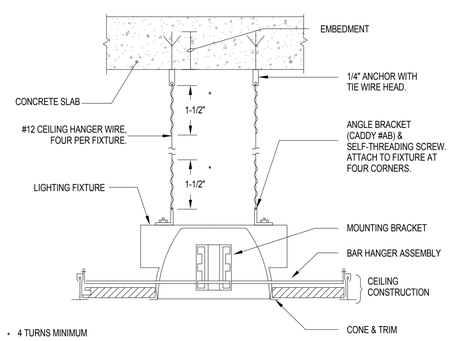

2 RECESSED DOWNLIGHT - TILE CEILING

N.T.S.

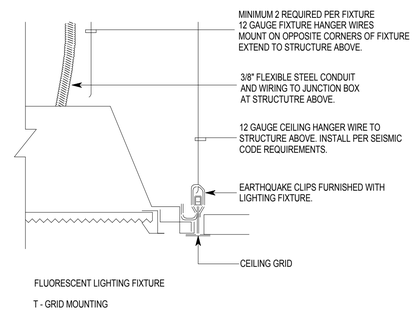

1 RECESSED TROFFER T GRID MOUNTING

N.T.S.

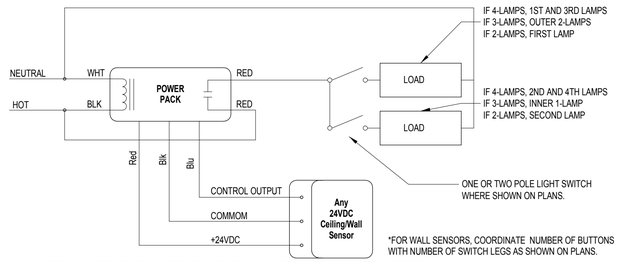

*FOR WALL SENSORS, COORDINATE NUMBER OF BUTTONS WITH NUMBER OF SWITCH LEGS AS SHOWN ON PLANS.

TYPE A, DUAL TECHNOLOGY PASSIVE INFRARED/ULTRA SONIC SENSOR, COVERAGE AREA 300 S.F. MIN.
TYPE B, DUAL TECHNOLOGY PASSIVE INFRARED/ULTRA SONIC SENSOR WITH INTEGRAL PHOTOCELL, COVERAGE AREA 300 S.F. MIN.

OCCUPANCY/VACANCY SENSOR(S) SHALL BE PROVIDED WITH CAPABILITY TO OPERATE EITHER THROUGH DIP SWITCH SETTINGS OR OTHERWISE. SEE SPECIFICATION SECTION 26 09 23.00 40 FOR FURTHER DETAILS.

OCCUPANCY/VACANCY SENSOR(S) SEQUENCE OF OPERATION(S) IS TO BE AS FOLLOWS:

1. UPON OCCUPANT(S) ENTRY TO THE CONTROLLED AREA, OCCUPANT/VACANCY SENSOR(S) SHALL ACTIVATE ASSOCIATED LIGHTING FIXTURES EITHER AUTOMATICALLY (OCCUPANCY, 'AUTOMATIC-ON) OR MANUALLY (VACANCY, MANUAL-ON').
2. UPON OCCUPANT(S) LEAVING THE CONTROLLED AREA, OCCUPANCY/VACANCY SENSOR(S) SHALL AUTOMATICALLY SWITCH THE LIGHTS ('AUTOMATIC-OFF') AFTER A PRE-DETERMINED TIME DELAY OF NO
3. MORE THAN 30 MINUTES.
   THE SYSTEM SHALL CONTINUALLY OPERATE IN 'MANUAL-ON' AND 'AUTOMATIC-OFF' MODES.

4 OCCUPANCY/VACANCY SENSOR - TYPE A,B

N.T.S.

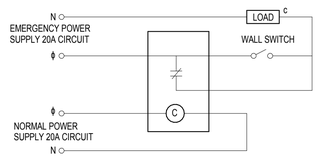

CONCEPTUAL WIRING SCHEMATIC

SPECIFICATIONS:

1. EMERGENCY SHUNT RELAY TO BE FACTORY MOUNTED IN A 4"X4" JUNCTION BOX WITH 2 GANG PLASTER RING. EMERGENCY CIRCUIT WALL SWITCH SHALL MOUNT IN THE SAME ENCLOSURE. CONTRACTOR TO SUPPLY 2 GANG WALL PLATE AND SINGLE WALL SWITCH APPROPRIATELY RATED ACCORDING TO NEC AND ANY LOCAL ELETCTRICAL CODES. EMERGENCY SHUNT TRIP RELAY SHALL BE ETL LISTED TO UL STANDARD 916 AND UL STANDARD 924, WITH A 16 GAUGE STEEL BARRIER TO SEPARATE NORMAL AND EMERGENCY POWER.

5 LINE VOLTAGE SWITCH - EMERGENCY SHUNT

N.T.S.

SYM	DESCRIPTION	DATE
	FINAL CORRECTED SET	03/26/14
	100% FINAL DESIGN SUBMISSION	02/14/14
	65% VE SUBMISSION	11/25/13

NAVFAC

STATE OF MARYLAND — DAVID C. BECHTOLD — No. 15090 — PROFESSIONAL ENGINEER — 3/26/14

HDR

ARCHITECTURE | ENGINEERING & CONSULTING
1101 KING STREET
SUITE 400
ALEXANDRIA, VIRGINIA 22314
703-518-8500

APPROVED

FOR COMMANDER NAVFAC

ACTIVITY

SATISFACTORY TO DATE

DES	KM	DRW	KM	CHK	GK

PM/DM: CHEMENJU/HILL
BRANCH MANAGER: N/A
CHIEF ENG/ARCH: TOM COX

DEPARTMENT OF THE NAVY
NAVAL FACILITIES ENGINEERING COMMAND ~ AGENCY
COMPONENT NAME:
NAVAL FACILITIES ENGINEERING COMMAND
BASE - CITY, STATE
BETHESDA, MD
PROJECT STATION/INSTALLATION
P125 - TEMPORARY MEDICAL FACILITIES
PACKAGE 2 - CLINIC BUILDING

ELECTRICAL LIGHTING DETAILS

SCALE: As indicated
EPROJECT NO.: 1151333
CONSTR. CONTR. NO.: N62470-09-D-9044
NAVFAC DRAWING NO.: 13066094
SHEET E-511 OF 0

C:\vrt\191274-MEP-F2-CENTRAL_bpongaud.rvt 3/19/2014 4:12:25 PM

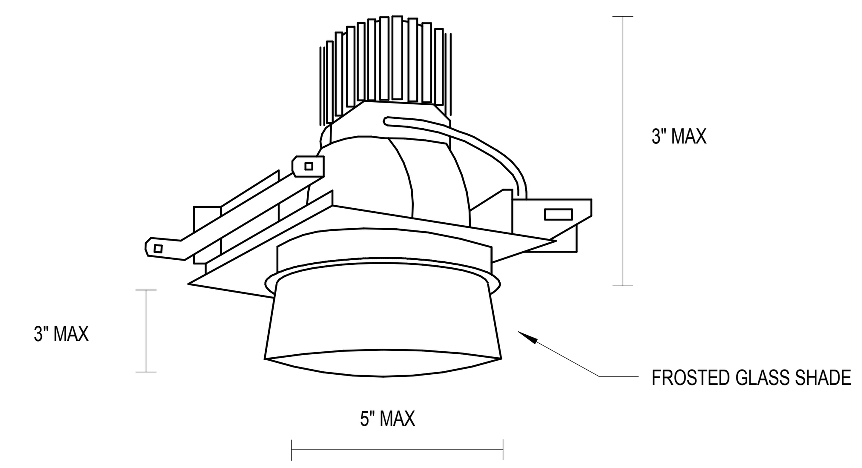

LUMINAIRE REQUIREMENTS:

1. HOUSING - DIE-FORMED HOUSING WITH DIE-CAST ALUMINUM HEAT SINK. HEAT SINK SHALL BE INCORPORATED DIRECTLY INTO DRIVER COMPARTMENT TO ENSURE MAXIMUM HEAT TRANSFER AND DISSIPATION.
2. REFLECTOR - ONE-PIECE, IRIDESCENCE-SUPPRESSED ALUMINUM WITH SEMI-DIFFUSE FINISH. PAINTED WHITE FLANGE.
3. BALLAST/LED DRIVER -CLASS 1, CONSTANT CURRENT, ELECTRONIC DRIVER WITH 0-10 VOLT DIMMING FOR LED LIGHT SOURCE.
4. LIGHT SOURCE - REFER TO LIGHTING FIXTURE SCHEDULE FOR CRI AND CCT INFORMATION. LED MODULE TO HAVE LUMEN OUTPUT OF 1100 LUMENS.
5. SHADE - FIXTURE PROVIDED WITH CYLINDRICAL WHITE GLASS SHADE.
5. CERTIFICATION - UL AND/OR ETL LISTED FOR DAMPLOCATION AS INDICATED, AND RoHS COMPLIANT.
6. OTHER - THE ABOVE SKETCH IS A NON-PROPRIETY GRAPHIC REPRESENTATION OF A LUMINAIRE THAT MAY MEET THE SPECIFICATION REQUIREMENTS AND IS NOT INTENDED TO INDICATE A CERTAIN MANUFACTURER'S PREFERENCE. ALL DIMENSIONS ARE NOMINAL AND VARY PER MANUFACTURER.
7. PHOTOMETRICS - MINIMUM VALUE OF COEFFICIENT OF UTILIZATION (CU) AND EFFICIENCY, GIVEN INTERIOR CAVITY REFLECTANCES OF 80-50-20:

LED

RCR	CU
1	109
2	100
3	91
4	83

EFFICIENCY - 86%

* CU TABLE INDICATES OPEN DOWNLIGHT PERFORMANCE WITHOUT ADDITION OF GLASS SHADE

RECESSED DECORATIVE DOWNLIGHT

REVISED: APRIL 2013 | LUMINAIRE PLATE: | TYPE: D1D

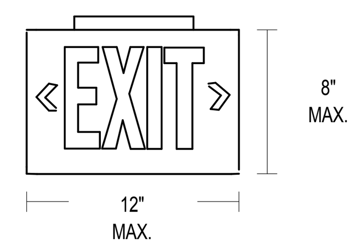

LUMINAIRE REQUIREMENTS:

1. HOUSING - HIGH-IMPACT, UV-STABILIZED, INJECTION-MOLDED THERMOPLASTIC. SINGLE-FACE (TYPE E1) OR OR DOUBLE-FACED (TYPE E2).
2. WHITE FINISH
3. LETTERS/CHEVRONS - MINIMUM 6" HIGH WITH 3/4" STROKE. PROVIDE CHEVRONS AS INDICATED EITHER LEFT, RIGHT OR BOTH DIRECTIONS AS INDICATED. CHEVRONS PUNCHED OUT THROUGH HOUSING AS REQUIRED.
4. MOUNTING - UNIVERSAL MOUNTING KIT FOR CEILING, WALL OR END-OF-FIXTURE MOUNTING
5. ILLUMINATION - LETTERS OF EXIT SIGN SHALL BE RED. PROVIDE POLYSTYRENE DIFFUSER IN COLOR INDICATED WITH FREQUENCY-MATCHED SILKSCREEN COATING FOR MAXIMUM LED LIGHT OUTPUT.
6. CERTIFICATION - UL LISTED AND CERTIFIED FOR DAMP LOCATIONS.

LED EXIT SIGN

REVISED: FEBRUARY 2013 | LIGHTING PLATE: | TYPE: E1, E2

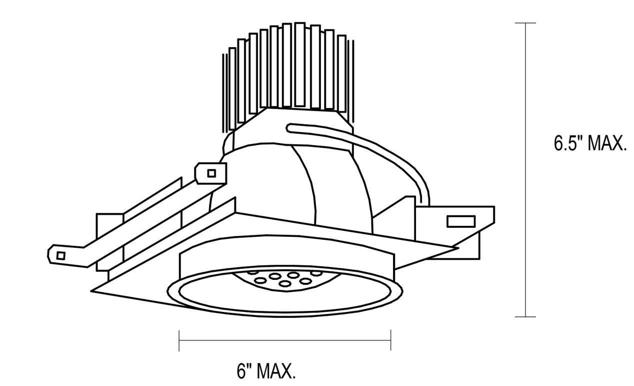

LUMINAIRE REQUIREMENTS:

1. HOUSING - DIE-FORMED STEEL HOUSING WITH DIE-CAST ALUMINUM HEAT SINK. HEAT SINK SHALL BE INCORPORATED DIRECTLY INTO DRIVER COMPARTMENT TO ENSURE MAXIMUM HEAT TRANSFER AND DISSIPATION.
2. REFLECTOR - ONE-PIECE, IRIDESCENCE-SUPPRESSED ALUMINUM WITH SEMI-DIFFUSE FINISH. PAINTED WHITE FLANGE.
3. BALLAST/LED DRIVER -CLASS 1, CONSTANT CURRENT, ELECTRONIC DRIVER WITH 0-10 VOLT DIMMING FOR LED LIGHT SOURCE.
4. LIGHT SOURCE - REFER TO LIGHTING FIXTURE SCHEDULE FOR CRI AND CCT INFORMATION. LED MODULE TO HAVE LUMEN OUTPUT OF 1100 LUMENS.
5. CERTIFICATION - UL AND/OR ETL LISTED FOR DAMPLOCATION AS INDICATED, AND RoHS COMPLIANT.
6. OTHER - THE ABOVE SKETCH IS A NON-PROPRIETY GRAPHIC REPRESENTATION OF A LUMINAIRE THAT MAY MEET THE SPECIFICATION REQUIREMENTS AND IS NOT INTENDED TO INDICATE A CERTAIN MANUFACTURER'S PREFERENCE. ALL DIMENSIONS ARE NOMINAL AND VARY PER MANUFACTURER.
7. PHOTOMETRICS - MINIMUM VALUE OF COEFFICIENT OF UTILIZATION (CU) AND EFFICIENCY, GIVEN INTERIOR CAVITY REFLECTANCES OF 80-50-20:

LED

RCR	CU
1	109
2	100
3	91
4	83

EFFICIENCY - 86%

RECESSED DOWNLIGHT

REVISED: FEBRUARY 2013 | LUMINAIRE PLATE: | TYPE: F1D, M1D

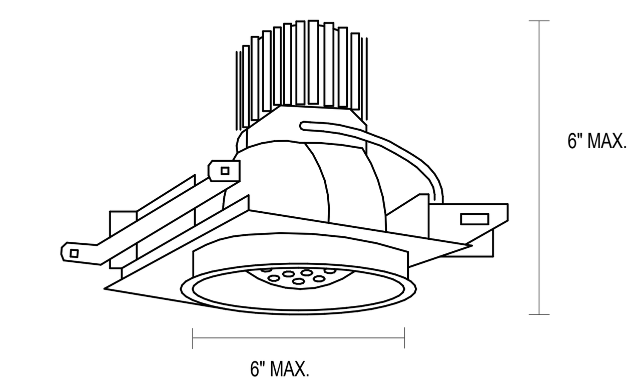

LUMINAIRE REQUIREMENTS:

1. HOUSING - DIE-FORMED STEEL HOUSING WITH DIE-CAST ALUMINUM HEAT SINK. HEAT SINK SHALL BE INCORPORATED DIRECTLY INTO DRIVER COMPARTMENT TO ENSURE MAXIMUM HEAT TRANSFER AND DISSIPATION.
2. REFLECTOR - ONE-PIECE, IRIDESCENCE-SUPPRESSED ALUMINUM WALL WASH REFLECTOR WITH SEMI-DIFFUSE FINISH. PAINTED WHITE FLANGE.
3. BALLAST/LED DRIVER -CLASS 1, CONSTANT CURRENT, ELECTRONIC DRIVER WITH 0-10 VOLT DIMMING FOR LED LIGHT SOURCE.
4. LIGHT SOURCE - REFER TO LIGHTING FIXTURE SCHEDULE FOR CRI AND CCT INFORMATION. LED MODULE TO HAVE LUMEN OUTPUT OF 1100 LUMENS.
5. CERTIFICATION - UL AND/OR ETL LISTED FOR DAMP LOCATION, AND RoHS COMPLIANT.
6. OTHER - THE ABOVE SKETCH IS A NON-PROPRIETY GRAPHIC REPRESENTATION OF A LUMINAIRE THAT MAY MEET THE SPECIFICATION REQUIREMENTS AND IS NOT INTENDED TO INDICATE A CERTAIN MANUFACTURER'S PREFERENCE. ALL DIMENSIONS ARE NOMINAL AND VARY PER MANUFACTURER.
7. PHOTOMETRICS - MINIMUM VALUE OF COEFFICIENT OF UTILIZATION (CU) AND EFFICIENCY, GIVEN INTERIOR CAVITY REFLECTANCES OF 80-50-20:

LED

RCR	CU
1	109
2	100
3	91
4	83

EFFICIENCY - 58%

RECESSED DOWNLIGHT WALLWASH

REVISED: FEBRUARY 2013 | LUMINAIRE PLATE: | TYPE: F1DW

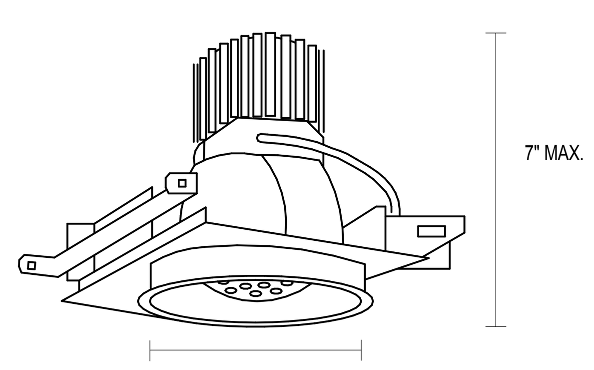

LUMINAIRE REQUIREMENTS:

1. HOUSING - DIE-FORMED HOUSING WITH DIE-CAST ALUMINUM HEAT SINK. HEAT SINK SHALL BE INCORPORATED DIRECTLY INTO DRIVER COMPARTMENT TO ENSURE MAXIMUM HEAT TRANSFER AND DISSIPATION.
2. REFLECTOR - ONE-PIECE, IRIDESCENCE-SUPPRESSED ALUMINUM WALL WITH SEMI-DIFFUSE FINISH. PAINTED WHITE FLANGE.
3. BALLAST/LED DRIVER -CLASS 1, CONSTANT CURRENT, ELECTRONIC DRIVER WITH 0-10 VOLT DIMMING FOR LED LIGHT SOURCE.
4. LIGHT SOURCE - REFER TO LIGHTING FIXTURE SCHEDULE FOR CRI AND CCT INFORMATION. LED MODULE TO HAVE LUMEN OUTPUT OF 1100 LUMENS.
5. CERTIFICATION - UL AND/OR ETL LISTED FOR WET LOCATIONS AND RoHS COMPLIANT. SUITABLE FOR USE IN SHOWER APPLICATION.
6. OTHER - THE ABOVE SKETCH IS A NON-PROPRIETY GRAPHIC REPRESENTATION OF A LUMINAIRE THAT MAY MEET THE SPECIFICATION REQUIREMENTS AND IS NOT INTENDED TO INDICATE A CERTAIN MANUFACTURER'S PREFERENCE. ALL DIMENSIONS ARE NOMINAL AND VARY PER MANUFACTURER.
7. PHOTOMETRICS - MINIMUM VALUE OF COEFFICIENT OF UTILIZATION (CU) AND EFFICIENCY, GIVEN INTERIOR CAVITY REFLECTANCES OF 80-50-20:

LED

RCR	CU
1	110
2	102
3	94
4	88

EFFICIENCY - 86%

RECESSED SHOWER DOWNLIGHT

REVISED: FEBRUARY 2013 | LUMINAIRE PLATE: | TYPE: F2D

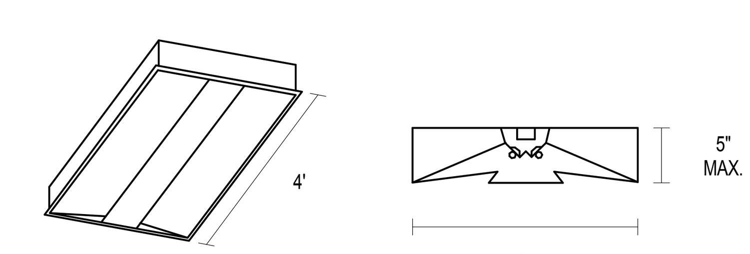

LUMINAIRE REQUIREMENTS:

1. HOUSING - DIE-FORMED, COLD-ROLLED STEEL, WITH REINFORCEMENT RIBS FOR RIGIDITY. ENDCAPS SECURED WITH TABS, SCREWS OR RIVETS. FIXTURE SHALL NOT PERMANENTLY DEFORM OUT OF "SQUARE" WHEN PICKED UP FROM ANY CORNER.
2. FINISH - MULTI-STAGE PHOSPHATE BONDING TREATMENT FINISHED WITH HIGH REFLECTANCE (MINIMUM 85%), BAKED WHITE ENAMEL FINISH.
3. REFLECTORS - TWO-PIECE CURVED ALUMINUM WITH MATTE WHITE FINISH.
4. DIFFUSE ACRYLIC CENTER OPTIC LENS
5. LAMPS - LINEAR FLUORESCENT, WITH WATTAGES AS INDICATED. SEE LIGHTING FIXTURE SCHEDULE FOR LAMP TYPE.
6. BALLAST - CLASS P, THERMALLY-PROTECTED, HIGH POWER FACTOR ($\geq$.95), ELECTRONIC TYPE WITH SOUND RATING A. SEE SPECIFICATION AND LIGHTING FIXTURE SCHEDULE FOR BALLAST OPTIONS AND SPECIFICS.
7. CERTIFICATION - UL LISTED AND LABELED.
8. PHOTOMETRICS - MINIMUM VALUE OF COEFFICIENT OF UTILIZATION (CU) AND EFFICIENCY, GIVEN INTERIOR CAVITY REFLECTANCES OF 80-50-20:
9. PROVIDED WITH HINGED DOOR FRAME. LAMPS AND BALLASTS TO BE ASSESSIBLE FROM BELOW
10. HOUSING PAINTED AFTER FABRICATION.

1 LAMP (F32/T8)

RCR	CU
1	92
2	81
3	71
4	63

EFFICIENCY - 87%

2 LAMP (F32/T8)

RCR	CU
1	89
2	78
3	68
4	61

EFFICIENCY - 84%

3 LAMP (F32/T8)

RCR	CU
1	80
2	70
3	62
4	55

EFFICIENCY - 76%

DIRECT/INDIRECT VOLUMETRIC RECESSED 2' X 4' FLUORESCENT

REVISED: FEBRUARY 2013 | LIGHTING PLATE: | TYPE: M_, R_

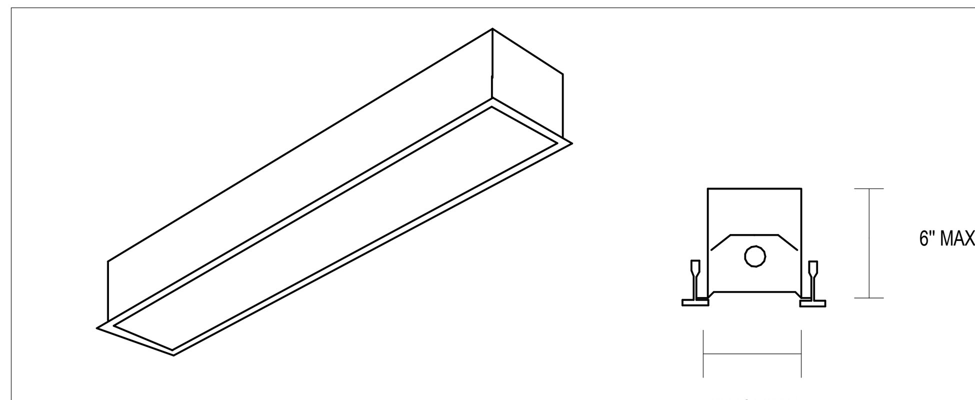

LUMINAIRE REQUIREMENTS:

1. HOUSING - DIE-FORMED, COLD-ROLLED STEEL, WITH REINFORCEMENT RIBS FOR RIGIDITY. ENDCAPS SECURED WITH TABS, SCREWS OR RIVETS. FIXTURE SHALL NOT PERMANENTLY DEFORM OUT OF "SQUARE" WHEN PICKED UP FROM ANY PERMANENTLY DEFORM OUT OF "SQUARE" WHEN PICKED UP FROM ANY CORNER. FIXTURE PROVIDED WITH REGRESSED ACRYLIC LENS.
2. FINISH - MULTI-STAGE PHOSPHATE BONDING TREATMENT FINISHED WITH HIGH REFLECTANCE (MINIMUM 85%), BAKED WHITE ENAMEL FINISH.
3. REFLECTOR - ASYMETRICAL LOW-IRIDESCENT, SEMI-SPECULAR ANODIZED ALUMINUM.
4. LAMPS - LINEAR FLUORESCENT, WITH WATTAGES AS INDICATED. SEE LIGHTING FIXTURE SCHEDULE.
5. BALLAST - CLASS P, THERMALLY-PROTECTED, HIGH POWER FACTOR ($\geq$.95), ELECTRONIC TYPE WITH SOUND RATING A. SEE SPECIFICATION OR LIGHTING FIXTURE SCHEDULE FOR BALLAST OPTIONS AND SPECIFICS.
6. CERTIFICATION - UL LISTED AND LABELED.
7. FIXTURE LENGTHS - PROVIDE CONTINUOUS LENGTHS AS INDICATED ON THE PLANS.
8. PHOTOMETRICS - MINIMUM VALUE OF COEFFICIENT OF UTILIZATION (CU) AND EFFICIENCY, GIVEN INTERIOR CAVITY REFLECTANCES OF 80-50-20:

1 LAMP (54T5HO)

RCR	CU
1	71
2	63
3	56
4	50

EFFICIENCY - 67%

LINEAR RECESSED LUMINAIRE

REVISED: JUNE 2013 | LIGHTING PLATE: | P4, P4A

SYM	DESCRIPTION	DATE
	FINAL CORRECTED SET	03/26/14
	100% FINAL DESIGN SUBMISSION	02/14/14
	65% VE SUBMISSION	11/25/13

NAVFAC

HDR
ARCHITECTURE | ENGINEERING & CONSULTING
1101 KING STREET
SUITE 400
ALEXANDRIA, VIRGINIA 22314
703-518-8500

APPROVED

FOR COMMANDER NAVFAC

ACTIVITY

SATISFACTORY TO DATE

DES KM | DRW KM | CHK GK
PM/DM CHEMENJU/HILL
BRANCH MANAGER N/A
CHIEF ENG/ARCH TOM COX

DEPARTMENT OF THE NAVY
NAVAL FACILITIES ENGINEERING COMMAND
NAVAL FACILITIES ENGINEERING COMMAND ~ AGENCY
COMPONENT NAME
BASE - CITY, STATE
PROJECT STATION/INSTALLATION
BETHESDA, MD
P125 - TEMPORARY MEDICAL FACILITIES
PACKAGE 2 - CLINIC BUILDING
ELECTRICAL LIGHTING FIXTURE PLATES

SCALE: N.T.S.
EPROJECT NO.: 1151333
CONSTR. CONTR. NO. N62470-09-D-9044
NAVFAC DRAWING NO. 13066095
SHEET OF 0

E-512

C:\rvt\191274-MEP-F2-CENTRAL_tpongsud.rvt 3/19/2014 4:12:28 PM

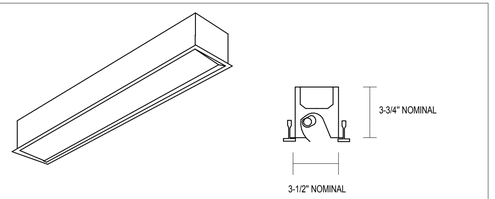

LUMINAIRE REQUIREMENTS:

1. HOUSING - DIE-FORMED, COLD-ROLLED STEEL, WITH REINFORCEMENT RIBS FOR RIGIDITY. ENDCAPS SECURED WITH TABS, SCREWS OR RIVETS. FIXTURE SHALL NOT PERMANENTLY DEFORM OUT OF "SQUARE" WHEN PICKED UP FROM ANY PERMANENTLY DEFORM OUT OF "SQUARE" WHEN PICKED UP FROM ANY CORNER.
2. FINISH - MULTI-STAGE PHOSPHATE BONDING TREATMENT FINISHED WITH HIGH REFLECTANCE (MINIMUM 85%), BAKED WHITE ENAMEL FINISH.
3. REFLECTOR - ASYMETRICAL LOW-IRIDESCENT, SEMI-SPECULAR ANODIZED ALUMINUM.
4. LAMPS - LINEAR FLUORESCENT, WITH WATTAGES AS INDICATED. SEE LIGHTING FIXTURE SCHEDULE.
5. BALLAST - CLASS P, THERMALLY-PROTECTED, HIGH POWER FACTOR ($\geq$.95), ELECTRONIC TYPE WITH SOUND RATING A. SEE SPECIFICATION OR LIGHTING FIXTURE SCHEDULE FOR BALLAST OPTIONS AND SPECIFICS.
6. CERTIFICATION - UL LISTED AND LABELED.
7. FIXTURE LENGTHS - 2' AND 4' AVAILABLE.
8. PHOTOMETRICS - MINIMUM VALUE OF COEFFICIENT OF UTILIZATION (CU) AND EFFICIENCY, GIVEN INTERIOR CAVITY REFLECTANCES OF 80-50-20:

1 LAMP (54T5HO)

RCR	CU
1	75
2	64
3	55
4	48

EFFICIENCY - 63%

LINEAR FLUORESCENT WALL WASH

REVISED: APRIL 2013 | LIGHTING PLATE: P4W

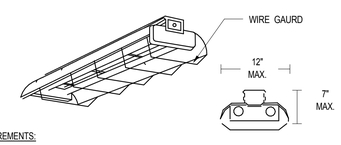

LUMINAIRE REQUIREMENTS:

1. HOUSING - DIE-FORMED, COLD-ROLLED STEEL, WITH REINFORCEMENT RIBS FOR RIGIDITY. ENDCAPS SECURED WITH TABS, SCREWS OR RIVETS. FIXTURE SHALL NOT PERMANENTLY DEFORM OUT OF "SQUARE" WHEN PICKED UP FROM ANY CORNER.
2. FINISH - MULTI-STAGE PHOSPHATE BONDING TREATMENT FINISHED WITH HIGH REFLECTANCE (MINIMUM 85%), BAKED WHITE ENAMEL FINISH.
3. LAMPHOLDERS- PRESSURE-LOCKED TYPE ENCLOSED IN TURRET HOUSING.
4. REFLECTOR - DIE-FORMED, COLD-ROLLED STEEL WITH TRANSVERSE RIBS FOR RIGIDITY. SOLID, 10% UPLIGHT APERATURE.
5. LAMPS - LINEAR FLUORESCENT, WITH WATTAGES AS INDICATED. SEE LIGHTING FIXTURE SCHEDULE.
6. BALLAST - CLASS P, THERMALLY-PROTECTED, HIGH POWER FACTOR ($\geq$.95), ELECTRONIC TYPE WITH SOUND RATING A. SEE SPECIFICATION OR LIGHTING FIXTURE SCHEDULE FOR BALLAST OPTIONS AND SPECIFICS.
7. CERTIFICATION - UL LISTED AND LABELED.
8. OPTIONS - CHAIN HANGER AND PLATED STEEL WIRE GUARD.
9. PHOTOMETRICS - MINIMUM VALUE OF COEFFICIENT OF UTILIZATION (CU) AND EFFICIENCY, GIVEN INTERIOR CAVITY REFLECTANCES OF 80-50-20:

1 LAMP (F32/T8)

RCR	CU
1	90
2	79
3	69
4	61

EFFICIENCY - 90%

2 LAMP (F32/T8)

RCR	CU
1	90
2	79
3	69
4	61

EFFICIENCY - 90%

INDUSTRIAL FLUORESCENT

REVISED: FEBRUARY 2013 | LIGHTING PLATE: TYPE: T_

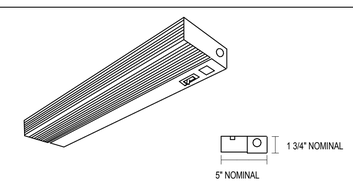

LUMINAIRE REQUIREMENTS:

1. HOUSING - DIE-FORMED, COLD-ROLLED STEEL, WITH REINFORCEMENT RIBS FOR RIGIDITY. ENDCAPS SECURED WITH TABS, SCREWS OR RIVETS. FIXTURE PROVIDED WITH INTEGRAL OCCUPANCY SENSOR.
2. FINISH - MULTI-STAGE PHOSPHATE BONDING TREATMENT FINISHED WITH HIGH REFLECTANCE (MINIMUM 85%), BAKED WHITE ENAMEL FINISH.
3. LENS - 100% ACRYLIC, CLEAR PRISMATIC OR WHITE TRANSLUCENT DIFFUSER WITH LINEAR RIBS FOR EVEN ILLUMINATION.
4. LIGHT SOURCE - REFER TO LIGHTING FIXTURE SCHEDULE FOR CRI AND CCT INFORMATION.
5. DRIVER - CLASS P, THERMALLY-PROTECTED, HIGH POWER FACTOR ($\geq$.95), ELECTRONIC TYPE WITH SOUND RATING A. SEE SPECIFICATION OR LIGHTING FIXTURE SCHEDULE FOR BALLAST OPTIONS AND SPECIFICS.
6. CERTIFICATION - UL LISTED AND LABELED.
7. FIXTURE TYPES -
   TYPE U2 - 2' LENGTH - 11W MAX
   TYPE U3 - 3' LENGTH - 16W MAX
   TYPE U4 - 4' LENGTH - 20W MAX
8. PERFORMANCE - 320 LUMENS/FT DELIVERED MINIMUM.

FLUORESCENT UNDER-CABINET TASK LIGHT

REVISED: OCTOBER 2013 | LIGHTING PLATE: U1,U2,U3,U4

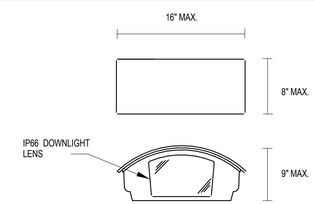

LUMINAIRE REQUIREMENTS:

1. HOUSING - ONE-PIECE, DIE-CAST ALUMINUM FACEPLATE AND HOUSING. ALL HARDWARE SHALL BE STAINLESS STEEL HEAT SINK FOR LED TYPE SHALL BE INCORPORATED DIRECTLY INTO HOUSING OR DRIVER COMPARTMENT TO ENSURE MAXIMUM HEAT TRANSFER AND DISSIPATION
2. FINISH - DARK BRONZE. MULTI-STAGE PRE-TREATMENT, FINISHED WITH BAKED-ON POLYESTER POWDER COAT. FINISH SHALL PASS 2500 HOUR SALT SPRAY TEST PER ASTM B117.
3. DRIVER - CLASS 1, CONSTANT CURRENT, ELECTRONIC DRIVER FOR LED LIGHT SOURCE
4. OPTICAL ASSEMBLY - REFLECTOR SHALL BE MULTI-FACETED, SEMI-SPECULAR ALUMINUM. SEMI-SPECULAR ALUMINUM.
5. LIGHT SOURCE - REFER TO LIGHTING FIXTURE SCHEDULE FOR CRI AND CCT INFORMATION.
6. CERTIFICATION - UL AND/OR ETL LISTED FOR WET LOCATION, AND RoHS COMPLIANT.
7. OTHER - THE ABOVE SKETCH IS A NON-PROPRIETARY GRAPHIC REPRESENTATION OF A LUMINAIRE THAT MAY MEET THE SPECIFICATION REQUIREMENTS AND IS NOT INTENDED TO INDICATE A CERTAIN MANUFACTURER'S PREFERENCE. ALL DIMENSIONS ARE NOMINAL AND VARY PER MANUFACTURER.
8. PHOTOMETRICS - MINIMUM VALUE OF COEFFICIENT OF UTILIZATION (CU) AND EFFICIENCY, GIVEN CAVITY REFLECTANCES OF 0-0-20:

LED

RCR	CU
1	79
2	61
3	47
4	37

EFFICACY - 74 LUMENS/WATT (TYPE 3 DISTRIBUTION)

LED WALL MOUNT EXTERIOR

REVISED: FEBRUARY 2013 | LUMINAIRE PLATE: TYPE: X1

SYM	DESCRIPTION	DATE
	FINAL CORRECTED SET	03/26/14
	100% FINAL DESIGN SUBMISSION	02/14/14
	65% VE SUBMISSION	11/25/13

NAVFAC

STATE OF MARYLAND — DAVID C. BECHTOL — No. 15000 — PROFESSIONAL ENGINEER — 3/26/14

HDR

ARCHITECTURE | ENGINEERING & CONSULTING

1101 KING STREET
SUITE 400
ALEXANDRIA, VIRGINIA 22314
703-518-8500

APPROVED

FOR COMMANDER NAVFAC

ACTIVITY

SATISFACTORY TO DATE

DES KM | DRW KM | CHK GK

PM/DM CHEMENJU/HILL

BRANCH MANAGER N/A

CHIEF ENG/ARCH TOM COX

DEPARTMENT OF THE NAVY
NAVAL FACILITIES ENGINEERING COMMAND
COMPONENT NAME
NAVAL FACILITIES ENGINEERING COMMAND – AGENCY
BASE - CITY, STATE
BETHESDA, MD
PROJECT STATION/INSTALLATION
P125 - TEMPORARY MEDICAL FACILITIES
PACKAGE 2 - CLINIC BUILDING
ELECTRICAL LIGHTING FIXTURE PLATES

SCALE: N.T.S.

EFPROJECT NO.: 1151333

CONSTR. CONTR. NO. N62470-09-D-9044

NAVFAC DRAWING NO. 13066096

SHEET OF 0

E-513

C:\vk\191274-MEP-F2-CENTRAL_bpongsud.rvt 3/19/2014 4:12:30 PM

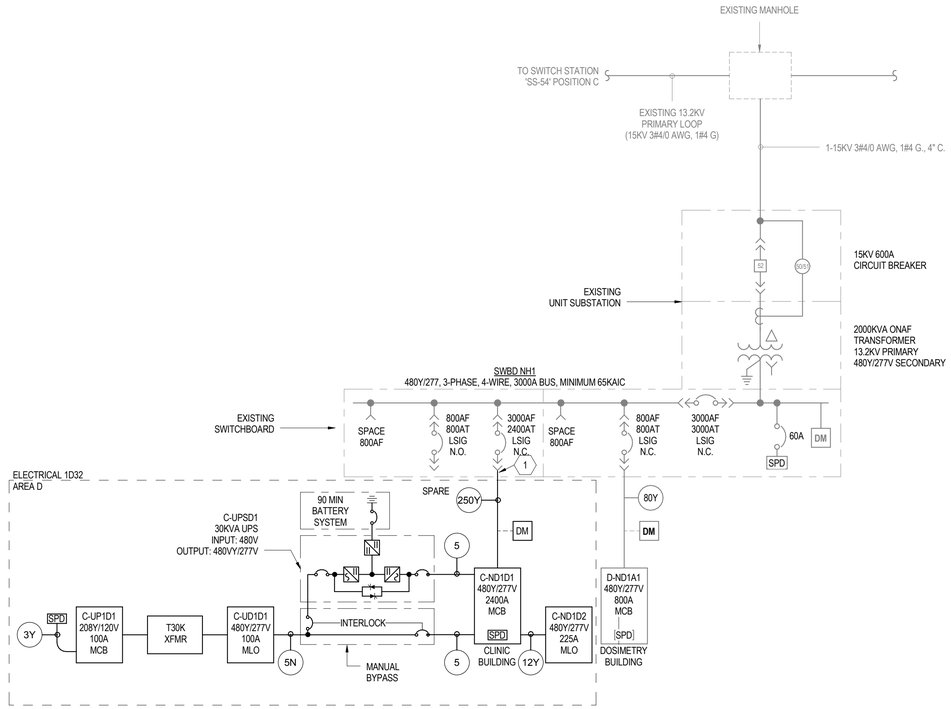

1 ELECTRICAL SINGLE LINE DIAGRAM

N.T.S.

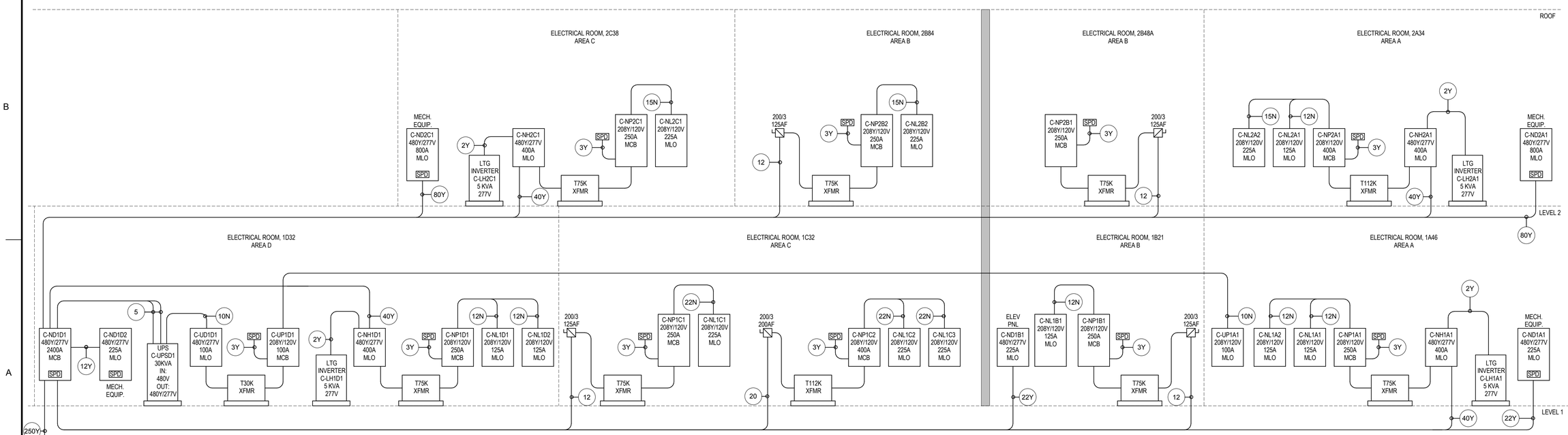

2 ELECTRICAL RISER DIAGRAM

N.T.S.

GENERAL NOTES:

A. REFER TO SHEETS E-001 & E-002 FOR LEGENDS, SYMBOLS AND ABBREVIATIONS.
B. REFER TO SHEET E-652 FOR FEEDER, TRANSFORMER AND MOTOR STARTER SCHEDULES.
C. ALL SURGE PROTECTION DEVICES (SPD) TO BE INSTALLED IN A SEPARATE ENCLOSURE FOR ALL PANELBOARDS AND/OR IN A SEPARATE COMPARTMENT FOR ALL SWITCHBOARDS.
D. ALL LIGHTING INVERTERS SHALL INCLUDE A 90-MIN BATTERY BACKUP.

KEYED NOTES:

1 CONNECT NEW CLINIC FEEDER TO EXISTING BREAKER. REFER TO PACKAGE 1 - NAVAL DOSIMETRY & SITE UTLITIES FOR MORE INFORMATION.

LEGEND:

EXISTING
NEW

SYM	DESCRIPTION	DATE
	FINAL CORRECTED SET	03/26/14
	100% FINAL DESIGN SUBMISSION	02/14/14
	65% VE SUBMISSION	11/25/13
	35% SUBMITTAL	03/08/13
	20% SUBMITTAL	01/18/13

NAVFAC

STATE OF MARYLAND
DAVID C. BECHTOLD
No. 15190
PROFESSIONAL ENGINEER
3/26/14

HDR

ARCHITECTURE | ENGINEERING & CONSULTING
1101 KING STREET
SUITE 400
ALEXANDRIA, VIRGINIA 22314
703-518-8500

APPROVED
FOR COMMANDER NAVFAC
ACTIVITY
SATISFACTORY TO DATE

DES	AE	DRW	KM
CHK	GK		

PM/DM: CHEMENJU/HILL
BRANCH MANAGER: N/A
CHIEF ENG/ARCH: TOM COX

DEPARTMENT OF THE NAVY
NAVAL FACILITIES ENGINEERING COMMAND ~ AGENCY
COMPONENT NAME:
NAVAL FACILITIES ENGINEERING COMMAND
BASE - CITY - STATE
BETHESDA, MD
PROJECT STATION/INSTALLATION
P125 - TEMPORARY MEDICAL FACILITIES
PACKAGE 2 - CLINIC BUILDING
ELECTRICAL SINGLE LINE & RISER DIAGRAMS

SCALE: N.T.S.
EPROJECT NO.: 1151333
CONSTR. CONTR. NO. N62470-09-D-9044
NAVFAC DRAWING NO. 13066097
SHEET 0 OF 0

E-601

C:\nvk19127A-MEP-F2-CENTRAL_bonoguid.rvt 3/19/2014 4:12:23 PM

LIGHTING FIXTURE SCHEDULE

FIXTURE TYPE	DESCRIPTION	LAMP QUANTITY	LAMP TYPE	LAMP WATTAGE	CCT	MIN. CRI	VOLT.	MOUNTING	NOTES
D1D	REFER TO FIXTURE PLATES ON SHEET E-512 AND E-513	1	LED	20	4000 K	80	277 V	RECESSED	0-10V DIMMING
E1	REFER TO FIXTURE PLATES ON SHEET E-512 AND E-513	1	LED	1			277 V	SURFACE	PROVIDE CHEVRONS AND MOUNTING AS INDICATED ON DRAWINGS
E2	REFER TO FIXTURE PLATES ON SHEET E-512 AND E-513	1	LED	1			277 V	SURFACE	PROVIDE CHEVRONS AND MOUNTING AS INDICATED ON DRAWINGS
F1D	REFER TO FIXTURE PLATES ON SHEET E-512 AND E-513	1	LED	20	4000 K	80	277 V	RECESSED	0-10V DIMMING
F1DW	REFER TO FIXTURE PLATES ON SHEET E-512 AND E-513	1	LED	20	4000 K	80	277 V	RECESSED	0-10V DIMMING, WALL WASH
F2D	REFER TO FIXTURE PLATES ON SHEET E-512 AND E-513	1	LED	20	4000 K	80	277 V	RECESSED	0-10V DIMMING
M1D	REFER TO FIXTURE PLATES ON SHEET E-512 AND E-513	1					277 V	RECESSED	
M2	REFER TO FIXTURE PLATES ON SHEET E-512 AND E-513	2	F32T8	32	4100 K	82	277 V	RECESSED	
M2B	REFER TO FIXTURE PLATES ON SHEET E-512 AND E-513	2	F32T8	32	5000 K	86	277 V	RECESSED	
M2BD	REFER TO FIXTURE PLATES ON SHEET E-512 AND E-513	2	F32T8	32	5000 K	86	277 V	RECESSED	0-10V DIMMING
M3AD	REFER TO FIXTURE PLATES ON SHEET E-512 AND E-513	3	F32T8	32	5000 K	90	277 V	RECESSED	0-10V DIMMING
M3B	REFER TO FIXTURE PLATES ON SHEET E-512 AND E-513	3	F32T8	32	5000 K	86	277 V	RECESSED	
M3BD	REFER TO FIXTURE PLATES ON SHEET E-512 AND E-513	3	F32T8	32	5000 K	86	277 V	RECESSED	0-10V DIMMING
M3D	REFER TO FIXTURE PLATES ON SHEET E-512 AND E-513	3	F32T8	32	4100 K	82	277 V	RECESSED	0-10V DIMMING
P4	REFER TO FIXTURE PLATES ON SHEET E-512 AND E-513	1	F32T8	32	4100 K	82	277 V	RECESSED	
P4A	REFER TO FIXTURE PLATES ON SHEET E-512 AND E-513	1	F32T8	32	5000 K	90	277 V	RECESSED	
P4W	REFER TO FIXTURE PLATES ON SHEET E-512 AND E-513	1	F54T5HO	54	4100 K	82	277 V	RECESSED	
R1	REFER TO FIXTURE PLATES ON SHEET E-512 AND E-513	1	F32T8	32	4100 K	82	277 V	RECESSED	
R1D	REFER TO FIXTURE PLATES ON SHEET E-512 AND E-513	1	F32T8	32	4100 K	82	277 V	RECESSED	0-10V DIMMING
R2	REFER TO FIXTURE PLATES ON SHEET E-512 AND E-513	2	F32T8	32	4100 K	82	277 V	RECESSED	
R2D	REFER TO FIXTURE PLATES ON SHEET E-512 AND E-513	2	F32T8	32	4100 K	82	277 V	RECESSED	0-10V DIMMING
T1G	REFER TO FIXTURE PLATES ON SHEET E-512 AND E-513	1	F32T8	32	4100 K	82	277 V	SUSPENDED	WIRE GUARD
T2G	REFER TO FIXTURE PLATES ON SHEET E-512 AND E-513	2	F32T8	32	4100 K	82	277 V	SUSPENDED	WIRE GUARD
U1,U2,U3,U4	REFER TO FIXTURE PLATES ON SHEET E-512 AND E-513	1	LED	WATTAGE AS INDICATED ON FIXTURE PLATES	4100 K	80	120 V	FURITURE MOUNTED	
X1	REFER TO FIXTURE PLATES ON SHEET E-512 AND E-513	1	LED	27	4000 K	80	277 V		REFER TO ARCHITECTURAL ELEVATIONS SHEETS A-201 THRU A-205 FOR MOUNTING HEIGHTS AND LOCATIONS

SYM	DESCRIPTION	DATE
	FINAL CORRECTED SET	03/26/14
	100% FINAL DESIGN SUBMISSION	02/14/14
	65% VE SUBMISSION	11/25/13
	35% SUBMITTAL	03/08/13

NAVFAC

STATE OF MARYLAND
PAUL C. BECHTOLD
No. 15000
PROFESSIONAL ENGINEER
3/20/14

HDR

ARCHITECTURE | ENGINEERING & CONSULTING

1101 KING STREET
SUITE 400
ALEXANDRIA, VIRGINIA 22314
703-518-8500

APPROVED

FOR COMMANDER NAVFAC

ACTIVITY

SATISFACTORY TO DATE

DES JSB | DRW JSB | CHK GK

PMDM CHEMENJU/HILL

BRANCH MANAGER N/A

CHIEF ENG/ARCH TOM COX

DEPARTMENT OF THE NAVY
NAVAL FACILITIES ENGINEERING COMMAND
COMPONENT NAME
NAVAL FACILITIES ENGINEERING COMMAND – AGENCY
BASE - CITY, STATE
BETHESDA, MD
PROJECT STATION/INSTALLATION
P125 - TEMPORARY MEDICAL FACILITIES
PACKAGE 2 - CLINIC BUILDING

ELECTRICAL LIGHTING FIXTURE SCHEDULES

SCALE:

EPROJECT NO.: 1151333

CONSTR. CONTR. NO. N62470-09-D-9044

NAVFAC DRAWING NO. 13066098

SHEET OF 0

E-651

C:\vk19\274-NEP-F2-CENTRAL_bpongsud.rvt 3/19/2014 4:12:37 PM

TRANSFORMER SCHEDULE

MARK *	KVA	PRIMARY 480V DELTA, 3Ø 3W		SECONDARY 208/120V, 3Ø, 4W						GROUNDING ELECTRODE CONDUCTOR		SYSTEM BONDING JUMPER WIRE (AWG OR KCMIL)	SUPPLY SIDE EQUIP BONDING JUMPER WIRE (AWG)
					FEEDER								
						CONDUCTOR SIZES (AWG OR KCMIL)							
		O/C PROT	FEEDER NO. **	O/C PROT	NO. OF SETS	PHASE	NEUTRAL	ISO GND	CONDUIT	WIRE (AWG)	CONDUIT SIZE		
T9	9	15/3	2	30/3	1	3 - #10	1 - #10	-	3/4'	1 - #8	1/2"	1 - #8	1 - #8
T15	15	30/3	3	50/3	1	3 - #6	1 - #6	-	1-1/4"	1 - #8	1/2"	1 - #8	1 - #8
T15K	15	30/3	3	50/3	1	3 - #6	1 - #3	1 - #8	1-1/4"	1 - #8	1/2"	1 - #8	1 - #8
T30	30	50/3	5	100/3	1	3 - #1	1 - #1	-	1-1/2"	1 - #6	1/2"	1 - #6	1 - #6
T30K	30	50/3	5	100/3	1	3 - #1	1 - #3/0	1 - #6	2"	1 - #6	1/2"	1 - #6	1 - #6
T45	45	70/3	7	175/3	1	3 - #2/0	1 - #2/0	-	2"	1 - #4	1/2"	1 - #4	1 - #4
T45K	45	70/3	7	175/3	1	3 - #3/0	2 - #2/0	1 - #4	2-1/2"	1 - #4	1/2"	1 - #4	1 - #4
T75	75	125/3	12	250/3	1	3 - 350	1 - 350	-	3-1/2"	1 - #2	1/2"	1 - #2	1 - #2
T75K	75	125/3	12	250/3	1	3 - 400	2 - 350	1 - #1/0	3-1/2"	1 - #1/0	3/4"	1 - #1/0	1 - #1/0
T112	112	200/3	20	400/3	2	3 - #3/0	1 - #3/0	-	2-1/2"	1 - #1/0	3/4"	1 - #1/0	1 - #4
T112K	112	200/3	20	400/3	2	3 - #4/0	2 - #3/0	1 - #1/0	3"	1 - #1/0	3/4"	1 - #1/0	1 - #1/0
T150	150	250/3	25	600/3	2	3 - 350	1 - 350	-	3"	1 - #2/0	3/4"	1 - #2/0	1 - #2
T150K	150	250/3	25	600/3	2	3 - 400	2 - 350	1 - #2/0	3-1/2"	1 - #2/0	3/4"	1 - #2/0	1 - #1/0
T225	225	400/3	40	800/3	3	3 - 300	1 - 300	-	3"	1 - #2/0	3/4"	1 - #2/0	1 - #2
T225K	225	400/3	40	800/3	3	3 - 350	2 - 250	1 - #2/0	3-1/2"	1 - #2/0	3/4"	1 - #2/0	1 - #2
T300	300	500/3	50	1200/3	4	3 - 350	1 - 350	-	3"	1 - #3/0	3/4"	1 - #3/0	1 - #2
T300K	300	500/3	50	1200/3	4	3 - 400	2 - 350	1 - #3/0	3-1/2"	1 - #3/0	3/4"	1 - #3/0	1 - #1/0
T500	500	800/3	80	2000/3	6	3 - 400	1 - 400	-	3-1/2"	1 - #3/0	3/4"	1 - 300	1 - #1/0
T500K	500	800/3	80	2000/3	6	3 - 500	2 - 500	1 - 400	4"	1 - #3/0	3/4"	1 - 400	1 - #1/0

* "K" SUFFIX INDICATES K-13 RATED TRANSFORMER.
** REFER TO FEEDER SCHEDULE ON THIS SHEET.

MOTOR STARTER SCHEDULE (480V)

MOTOR STARTER			MOTOR CIRCUIT PROTECTOR			CABLE & CONDUIT	LOCAL DISCONNECT
MOTOR HP	MOTOR FLA	STARTER SIZE	SENSOR AMPS	RATING PLUG AMPS	INSTANTANEOUS TRIP AMPS		
1/2	1	00	7	3	11	3#12, #12 GND., 3/4" C.	3P/30/NF
3/4	1.4	00	7	3	16	3#12, #12 GND., 3/4" C.	3P/30/NF
1	1.8	00	7	3	19	3#12, #12 GND., 3/4" C.	3P/30/NF
1-1/2	2.6	00	7	7	27	3#12, #12 GND., 3/4" C.	3P/30/NF
2	3.4	00	7	7	35	3#12, #12 GND., 3/4" C.	3P/30/NF
3	3.4	0	7	7	56	3#12, #12 GND., 3/4" C.	3P/30/NF
5	7.6	0	30	15	86	3#12, #12 GND., 3/4" C.	3P/30/NF
7-1/2	11	1	30	15	111	3#12, #12 GND., 3/4" C.	3P/30/NF
10	14	1	30	20	151	3#12, #12 GND., 3/4" C.	3P/30/NF
15	21	2	30	30	179	3#10, #10 GND., 3/4" C.	3P/30/NF
20	27	2	60	40	237	3#8, #10 GND., 1" C.	3P/60/NF
25	34	2	60	50	296	3#8, #10 GND., 1" C.	3P/60/NF
30	40	3	60	60	355	3#6, #10 GND., 1" C.	3P/60/NF
40	52	3	100	70	411	3#4, #8 GND., 1-1/4" C.	3P/100/NF
50	65	3	100	90	532	3#3, #8 GND., 1-1/4" C.	3P/100/NF
60	77	4	100	100	893	3#1, #6 GND., 1-1/2" C.	3P/100/NF
75	96	4	150	125	745	3#1/0, #6 GND., 2" C.	3P/200/NF
100	124	4	250	175	1035	3#3/0, #4 GND., 2" C.	3P/200/NF
125	156	5	250	200	1180	3#250 KCMIL, #4 GND., 2-1/2"C	3P/200/NF
150	180	5	250	225	1730	3#350 KCMIL, #4 GND., 3"C	3P/400/NF
200	240	5	400	300	2370	3#500 KCMIL, #3 GND., 3-1/2"C	3P/400/NF

FEEDER SCHEDULE

MARK	AMPACITY	NO. OF SETS	CONDUCTOR SIZES (AWG OR KCMIL)				CONDUIT SIZE
			PHASE	NEUTRAL	EQ GND	ISO GND	
vv	20	1	3 - #12	-	1 - #12		1/2"
2Y	20	1	3 - #12	1 - #12	1 - #12		1/2"
2N	20	1	3 - #12	1 - #8	1 - #12	1 - #12	3/4"
3	30	1	3 - #10	-	1 - #10		3/4"
3Y	30	1	3 - #10	1 - #10	1 - #10		3/4"
3N	30	1	3 - #10	1 - #6	1 - #10	1 - #10	1"
4	40	1	3 - #8	-	1 - #10		3/4"
4Y	40	1	3 - #8	1 - #8	1 - #10		1"
4N	40	1	3 - #8	1 - #4	1 - #10	1 - #10	1"
5	50	1	3 - #6	-	1 - #10		1"
5Y	50	1	3 - #6	1 - #6	1 - #10		1-1/4"
5N	50	1	3 - #6	1 - #3	1 - #10	1 - #10	1-1/4"
6	60	1	3 - #4	-	1 - #10		1"
6Y	60	1	3 - #4	1 - #4	1 - #10		1-1/4"
6N	60	1	3 - #4	1 - #2	1 - #10	1 - #10	1-1/4"
7	70	1	3 - #4	-	1 - #8		1-1/4"
7Y	70	1	3 - #4	1 - #4	1 - #8		1-1/4"
7N	70	1	3 - #4	1 - #1/0	1 - #8	1 - #8	1-1/2"
8	80	1	3 - #3	-	1 - #8		1-1/4"
8Y	80	1	3 - #3	1 - #3	1 - #8		1-1/4"
8N	80	1	3 - #3	1 - #2/0	1 - #8	1 - #8	1-1/2"
9	90	1	3 - #2	-	1 - #8		1-1/4"
9Y	90	1	3 - #2	1 - #2	1 - #8		1-1/2"
9N	90	1	3 - #2	1 - #2/0	1 - #8	1 - #8	2"
10	100	1	3 - #1	-	1 - #8		1-1/2"
10Y	100	1	3 - #1	1 - #1	1 - #8		1-1/2"
10N	100	1	3 - #1	1 -#3/0	1 - #8	1 - #8	2"
11	110	1	3 - #1	-	1 - #6		1-1/2"
11Y	110	1	3 - #1	1 - #1	1 - #6		2"
11N	110	1	3 - #1	1 - #4/0	1 - #6	1 - #6	2"
12	125	1	3 - #1/0	-	1 - #6		1-1/2"
12Y	125	1	3 - #1/0	1 - #1/0	1 - #6		2"
12N	125	1	3 - #1/0	1 - 250	1 - #6	1 - #6	2-1/2"
15	150	1	3 - #1/0	-	1 - #6	-	1-1/2"
15Y	150	1	3 - #1/0	1 - #1/0	1 - #6	-	2"
15N	150	1	3 - #1/0	1 - #350	1 - #4	1 - #4	2-1/2"
17	175	1	3 - #2/0	-	1 - #6	-	2"
17Y	175	1	3 - #2/0	1 - #2/0	1 - #6	-	2"
17N	175	1	3 - #2/0	2 - #2/0	1 - #4	1 - #4	2-1/2"
20	200	1	3 - #3/0	-	1 - #6	-	2"
20Y	200	1	3 - #3/0	1 - #3/0	1 - #6	-	2-1/2"
20N	200	1	3 - #3/0	2 - #3/0	1 - #4	1 - #4	3"
22	225	1	3 - #4/0	-	1 - #4	-	2"
22Y	225	1	3 - #4/0	1 - #4/0	1 - #4	-	2-1/2"
22N	225	1	3 - 250	2 - #4/0	1 - #3	1 - #3	3"
25	250	1	3 - 250	-	1 - #4	-	2-1/2"
25Y	250	1	3 - 250	1 - 250	1 - #4	-	3"
25N	250	1	3 - 300	2 - 250	1 - #3	1 - #3	3-1/2"
30	300	1	3 - 350	-	1 - #4	-	3"
30Y	300	1	3 - 350	1 - 350	1 - #4	-	3-1/2"
30N	300	1	3 - 400	2 - 350	1 - #3	1 - #3	3-1/2"
35	350	1	3 - 500	-	1 - #3	-	3"
35Y	350	1	3 - 500	1 - 500	1 - #3	-	3-1/2"
35N	350	2	3 - #3/0	2 - #2/0	1 - #3	1 - #3	2-1/2"
40	400	1	3 - 500	-	1 - #3	-	3"
40Y	400	1	3 - 500	1 - 500	1 - #3	-	3-1/2"
40N	400	2	3 - #4/0	2 - #3/0	1 - #1/0	1 - #1/0	3"
50	500	2	3 - 250	-	1 - #2	-	2-1/2"
50Y	500	2	3 - 250	1 - 250	1 - #2	-	3"
50N	500	2	3 - 300	2 - 250	1 - #1	1 - #1	3-1/2"
60	600	2	3 - 350	-	1 - #1	-	3"
60Y	600	2	3 - 350	1 - 350	1 - #1	-	3"
60N	600	2	3 - 400	2 - 350	1 - #1/0	1 - #1/0	3-1/2"
80	800	2	3 - 500	-	1 - #1/0	-	3"
80Y	800	2	3 - 500	1 - 500	1 - #1/0	-	3-1/2"
100	1000	3	3 - 400	-	1 - #2/0	-	3"
100Y	1000	3	3 - 400	1 - 400	1 - #2/0	-	3-1/2"
120	1200	4	3 - 350	-	1 - #3/0	-	3"
120Y	1200	4	3 - 350	1 - 350	1 - #3/0	-	3"
160	1600	5	3 - 400	-	1 - #4/0	-	3"
160Y	1600	5	3 - 400	1 - 400	1 - #4/0	-	3-1/2"
200	2000	6	3 - 400	-	1 - 250	-	3"
200Y	2000	6	3 - 400	1 - 400	1 - 250	-	3-1/2"
250	2500	7	3 - 500	-	1 - 350	-	3-1/2"
250Y	2500	7	3 - 500	1 - 500	1 - 350	-	4"
300	3000	8	3 - 500	-	1 - 400	-	3-1/2"
300Y	3000	8	3 - 500	1 - 500	1 - 400	-	4"
400	4000	11	3 - 500	-	1 - 500	-	3-1/2"
400Y	4000	11	3 - 500	1 - 500	1 - 500	-	4"

SYM	DESCRIPTION	DATE
	FINAL CORRECTED SET	03/26/14
	100% FINAL DESIGN SUBMISSION	02/14/14
	65% VE SUBMISSION	11/25/13
	35% SUBMITTAL	03/08/13

NAVFAC

STATE OF MARYLAND · DAVID C. BECHTOL · No. 15806 · REGISTERED PROFESSIONAL ENGINEER · 3/26/14

HDR
ARCHITECTURE | ENGINEERING & CONSULTING
1101 KING STREET
SUITE 400
ALEXANDRIA, VIRGINIA 22314
703-518-8500

APPROVED
FOR COMMANDER NAVFAC

ACTIVITY
SATISFACTORY TO DATE

DES AE | DRW AE | CHK GK
PM/DM CHEMENJU/HILL
BRANCH MANAGER N/A
CHIEF ENG/ARCH TOM COX

DEPARTMENT OF THE NAVY
NAVAL FACILITIES ENGINEERING COMMAND
NAVAL FACILITIES ENGINEERING COMMAND ~ AGENCY
COMPONENT NAME
BASE - CITY, STATE

PROJECT STATION/INSTALLATION
BETHESDA, MD
P125 - TEMPORARY MEDICAL FACILITIES
PACKAGE 2 - CLINIC BUILDING

ELECTRICAL FEEDER, TRANSFORMER & MOTOR STARTER SCHEDULES

SCALE:
EPROJECT NO.: 1151333
CONSTR. CONTR. NO. N62470-09-D-9044
NAVFAC DRAWING NO. 13066099
SHEET OF 0

E-652

C:\rvt\191274-MEP-F2-CENTRAL_tpongsud.rvt 3/19/2014 4:12:41 PM

PANEL: SWBD NH1 | OC DEVICE TYPE: Breaker | ENCLOSURE: NEMA 3R | MAINS(A): 3000 | CONTINUOUS(A): 3000
LOCATION: EXTERIOR | DEVICE FAMILY: Bolt On | MOUNTING: Free Standing | WIRING: 3-Phase 4-Wire | BUS SC RATING(A) 65000
FED FROM: XF 2000KVA_BUS-S | VOLTAGE: 480/277 | FAULT CURRENT(A): 44576

CUBICLE NO	DESCRIPTION	CONNECTED kVA	DEMAND kVA	DESIGN kVA	DESIGN AVE AMPS	OC DEVICE TYPE	OC DEVICE SIZE	P	NOTES
1	SPD	0.00	0.00	0.00	0.00		60	3	Existing
2	D-ND1C1_CBL	433.97	332.99	342.17	411.57		800	3	Existing
3	SPACE	0.00	0.00	0.00	0.00		0	3	
4	C-ND1D1_CBL	1847.71	1481.84	1559.21	1875.44		2400	3	
5	SPARE	0.00	0.00	0.00	0.00		800	3	
6	SPACE	0.00	0.00	0.00	0.00		0	3	
7	SPACE	0.00	0.00	0.00	0.00		0	3	

ALL CONNECTED	KVA	3P AVE AMPS	* PHASE TOTALS	VA	AMPS	BUS TOTALS	KVA
TOTAL CONNECTED	2281.68	2744.4	* A-N	760560.1	2744.4	CONNECTED	2281.68
TOTAL DEMAND	1809.83	2176.9	* B-N	760560.1	2744.4	DEMAND	1809.83
TOTAL DESIGN	1890.67	2274.1	* C-N	760560.1	2744.4	DESIGN	1890.67

PANEL: C-LH1A1 | OC DEVICE TYPE: Breaker | ENCLOSURE: NEMA 1 | MAINS(A): BKR | CONTINUOUS(A): 0
LOCATION: RM 1A46 | DEVICE FAMILY: Bolt On | MOUNTING: Free Standing | WIRING: Single-Phase 3-Wire | BUS SC RATING(A) 14000
FED FROM: C-NH1A1 | VOLTAGE: 480/277 | FAULT CURRENT(A): 0

CKT	DESCRIPTION	NOTES	DEMAND CODE	VA	OC AMPS P	PHASE	OC AMPS P	VA	DEMAND CODE	NOTES	DESCRIPTION	CKT
1	Lighting Corr 1B99E		LIGHTING	3441	20 1	A						2
3						B						4

ALL CONNECTED	KVA	3P AVE AMPS	* PHASE TOTALS	VA	AMPS	BUS TOTALS	KVA
TOTAL CONNECTED	3.44	4.1	* A-N	3441.0	12.4	CONNECTED	3.44
TOTAL DEMAND	3.44	4.1	* B-N	0.0	0.0	DEMAND	3.44
TOTAL DESIGN	4.30	5.2	* C-N	0.0	0.0	DESIGN	4.30

FOR INFORMATION ONLY.
PART OF LIGHTING INVERTER.

PANEL: C-LH1D1 | OC DEVICE TYPE: Breaker | ENCLOSURE: NEMA 1 | MAINS(A): BKR | CONTINUOUS(A): 0
LOCATION: RM 1D32 | DEVICE FAMILY: Bolt On | MOUNTING: Free Standing | WIRING: Single-Phase 3-Wire | BUS SC RATING(A) 14000
FED FROM: C-NH1D1 | VOLTAGE: 480/277 | FAULT CURRENT(A): 0

CKT	DESCRIPTION	NOTES	DEMAND CODE	VA	OC AMPS P	PHASE	OC AMPS P	VA	DEMAND CODE	NOTES	DESCRIPTION	CKT
1	Lighting Corr 1D99E		LTS	3678	0 1	A	0 1	0	SPACE		SPACE	2
3						B						4

ALL CONNECTED	KVA	3P AVE AMPS	* PHASE TOTALS	VA	AMPS	BUS TOTALS	KVA
TOTAL CONNECTED	3.68	4.4	* A-N	3678.0	13.3	CONNECTED	3.68
TOTAL DEMAND	3.68	4.4	* B-N	0.0	0.0	DEMAND	3.68
TOTAL DESIGN	4.60	5.5	* C-N	0.0	0.0	DESIGN	4.60

FOR INFORMATION ONLY.
PART OF LIGHTING INVERTER.

PANEL: C-LH2A1 | OC DEVICE TYPE: Breaker | ENCLOSURE: NEMA 1 | MAINS(A): BKR | CONTINUOUS(A): 0
LOCATION: RM 2A34 | DEVICE FAMILY: Bolt On | MOUNTING: Free Standing | WIRING: Single-Phase 3-Wire | BUS SC RATING(A) 14000
FED FROM: C-NH2A1 | VOLTAGE: 480/277 | FAULT CURRENT(A): 0

CKT	DESCRIPTION	NOTES	DEMAND CODE	VA	OC AMPS P	PHASE	OC AMPS P	VA	DEMAND CODE	NOTES	DESCRIPTION	CKT
1	LTS 2A34		LIGHTING	1525	20 1	A						2
3						B						4

ALL CONNECTED	KVA	3P AVE AMPS	* PHASE TOTALS	VA	AMPS	BUS TOTALS	KVA
TOTAL CONNECTED	1.52	1.8	* A-N	1525.0	5.5	CONNECTED	1.52
TOTAL DEMAND	1.52	1.8	* B-N	0.0	0.0	DEMAND	1.52
TOTAL DESIGN	1.91	2.3	* C-N	0.0	0.0	DESIGN	1.91

FOR INFORMATION ONLY.
PART OF LIGHTING INVERTER.

PANEL INDEX	
SWBD_NH1	C-LH1A1
C-LH1D1	C-LH2A1

SYM	DESCRIPTION	DATE
	FINAL CORRECTED SET	03/26/14

NAVFAC

STATE OF MARYLAND — PAUL C. BECHTOLD — REG. NO. 15090 — PROFESSIONAL ENGINEER — 3/26/14

HDR
ARCHITECTURE | ENGINEERING & CONSULTING
1101 KING STREET
SUITE 400
ALEXANDRIA, VIRGINIA 22314
703-518-8500

APPROVED
FOR COMMANDER NAVFAC
ACTIVITY
SATISFACTORY TO DATE

DES	KM	DRW	KM	CHK	GK
PMDM	CHEMENJU/HILL				
BRANCH MANAGER	N/A				
CHIEF ENG/ARCH	TOM COX				

DEPARTMENT OF THE NAVY
NAVAL FACILITIES ENGINEERING COMMAND
COMPONENT NAME
NAVAL FACILITIES ENGINEERING COMMAND — AGENCY
BASE - CITY, STATE
BETHESDA, MD
PROJECT STATION/INSTALLATION
P125 - TEMPORARY MEDICAL FACILITIES
PACKAGE 2 - CLINIC BUILDING
ELECTRICAL - PANEL SCHEDULE SHEET 1

SCALE: 12" = 1'-0"
EPROJECT NO.: 1151333
CONSTR. CONTR. NO.: N62470-09-D-9044
NAVFAC DRAWING NO.: 13066100
SHEET OF 0
E-701

C:\n51912744\MEP-F2-CENTRAL_bpongsud.rvt 3/19/2014 4:12:42 PM

PANEL: C-LH2C1 | OC DEVICE TYPE: Breaker | ENCLOSURE: NEMA 1 | MAINS(A): BKR | CONTINUOUS(A): 0
LOCATION: RM 2C38 | DEVICE FAMILY: Bolt On | MOUNTING: Free Standing | WIRING: Single-Phase 3-Wire | BUS SC RATING(A) 14000
FED FROM: C-NH2C1 | VOLTAGE: 480/277 | FAULT CURRENT(A): 0

CKT	DESCRIPTION	NOTES	DEMAND CODE	VA	OC AMPS P	PHASE	OC AMPS P	VA	DEMAND CODE	NOTES	DESCRIPTION	CKT
1	LTS		LIGHTING	1160	20 1	A						2
3						B						4

ALL CONNECTED	KVA	3P AVE AMPS	* PHASE TOTALS	VA	AMPS	BUS TOTALS	KVA
TOTAL CONNECTED	1.16	1.4	* A-N	1160.0	4.2	CONNECTED	1.16
TOTAL DEMAND	1.16	1.4	* B-N	0.0	0.0	DEMAND	1.16
TOTAL DESIGN	1.45	1.7	* C-N	0.0	0.0	DESIGN	1.45

FOR INFORMATION ONLY.
PART OF LIGHTING INVERTER.

PANEL: C-ND1A1 | OC DEVICE TYPE: Breaker | ENCLOSURE: NEMA 1 | MAINS(A): MLO | CONTINUOUS(A): 225
LOCATION: RM 1A46 | DEVICE FAMILY: Bolt On | MOUNTING: Surface | WIRING: 3-Phase 4-Wire | BUS SC RATING(A) 14000
FED FROM: C-ND1D1 | VOLTAGE: 480/277 | FAULT CURRENT(A): 6769

CKT	DESCRIPTION	NOTES	DEMAND CODE	VA	OC AMPS P	PHASE	OC AMPS P	VA	DEMAND CODE	NOTES	DESCRIPTION	CKT
1	DHW-2		HEATING 1	40500	60 3	A	60 3	40500	HEATING 1		DHW-1	2
3	"			-	"	B	"	-			"	4
5	"			-	"	C	"	-			"	6
7	UH-1		HEATING 1	3000	20 1	A	20 1	0	SPARE		SPARE	8
9	UH-2		HEATING 1	3000	20 1	B	30 3	0	GEN		SPD	10
11	SPARE		SPARE	0	20 1	C	"	-			"	12
13	SPARE		SPARE	0	20 1	A	"	-			"	14
15	SPARE		SPARE	0	20 1	B	20 1	0	SPARE		SPARE	16
17	SPARE		SPARE	0	20 1	C	20 1	0	SPARE		SPARE	18
19	SPARE		SPARE	0	20 1	A	20 1	0	SPARE		SPARE	20
21	SPARE		SPARE	0	20 1	B	20 1	0	SPARE		SPARE	22
23	SPARE		SPARE	0	20 1	C	20 1	0	SPARE		SPARE	24
25	SPARE		SPARE	0	20 1	A	20 1	0	SPARE		SPARE	26
27	SPARE		SPARE	0	20 1	B	20 1	0	SPARE		SPARE	28
29	SPARE		SPARE	0	20 1	C	20 1	0	SPARE		SPARE	30
31	SPACE		SPACE	0	20 1	A	20 1	0	SPACE		SPACE	32
33	SPACE		SPACE	0	20 1	B	20 1	0	SPACE		SPACE	34
35	SPACE		SPACE	0	20 1	C	20 1	0	SPACE		SPACE	36
37	SPACE		SPACE	0	20 1	A	20 1	0	SPACE		SPACE	38
39	SPACE		SPACE	0	20 1	B	20 1	0	SPACE		SPACE	40
41	SPACE		SPACE	0	20 1	C	20 1	0	SPACE		SPACE	42

ALL CONNECTED	KVA	3P AVE AMPS	* PHASE TOTALS	VA	AMPS	BUS TOTALS	KVA
TOTAL CONNECTED	87.00	104.6	* A-N	30000.0	108.3	CONNECTED	87.00
TOTAL DEMAND	87.00	104.6	* B-N	30000.0	108.3	DEMAND	87.00
TOTAL DESIGN	87.00	104.6	* C-N	27000.0	97.4	DESIGN	87.00

PANEL: C-ND1B1 | OC DEVICE TYPE: Breaker | ENCLOSURE: NEMA 1 | MAINS(A): MLO | CONTINUOUS(A): 225
LOCATION: RM 1B21 | DEVICE FAMILY: Bolt On | MOUNTING: Surface | WIRING: 3-Phase 4-Wire | BUS SC RATING(A) 14000
FED FROM: C-ND1D1 | VOLTAGE: 480/277 | FAULT CURRENT(A): 6943

CKT	DESCRIPTION	NOTES	DEMAND CODE	VA	OC AMPS P	PHASE	OC AMPS P	VA	DEMAND CODE	NOTES	DESCRIPTION	CKT
1	ELEV-1_CBL	* SHUNT TRIP	NONE	30081	60 3	A	60 3	30081	NONE	* SHUNT TRIP	ELEV-2_CBL	2
3	"			-	"	B	"	-			"	4
5	"			-	"	C	"	-			"	6
7	SPARE		SPARE	0	20 1	A	20 1	0	SPARE		SPARE	8
9	SPARE		SPARE	0	20 1	B	20 1	0	SPARE		SPARE	10
11	SPARE		SPARE	0	20 1	C	20 1	0	SPARE		SPARE	12
13	SPACE		SPACE	0	0 1	A	0 1	0	SPACE		SPACE	14
15	SPACE		SPACE	0	0 1	B	0 1	0	SPACE		SPACE	16
17	SPACE		SPACE	0	0 1	C	0 1	0	SPACE		SPACE	18
19	SPACE		SPACE	0	0 1	A	0 1	0	SPACE		SPACE	20
21	SPACE		SPACE	0	0 1	B	0 1	0	SPACE		SPACE	22
23	SPACE		SPACE	0	0 1	C	0 1	0	SPACE		SPACE	24
25	SPACE		SPACE	0	0 1	A	0 1	0	SPACE		SPACE	26
27	SPACE		SPACE	0	0 1	B	0 1	0	SPACE		SPACE	28
29	SPACE		SPACE	0	0 1	C	0 1	0	SPACE		SPACE	30
31	SPACE		SPACE	0	0 1	A	0 1	0	SPACE		SPACE	32
33	SPACE		SPACE	0	0 1	B	0 1	0	SPACE		SPACE	34
35	SPACE		SPACE	0	0 1	C	0 1	0	SPACE		SPACE	36
37	SPACE		SPACE	0	0 1	A	0 1	0	SPACE		SPACE	38
39	SPACE		SPACE	0	0 1	B	0 1	0	SPACE		SPACE	40
41	SPACE		SPACE	0	0 1	C	0 1	0	SPACE		SPACE	42

ALL CONNECTED	KVA	3P AVE AMPS	* PHASE TOTALS	VA	AMPS	BUS TOTALS	KVA
TOTAL CONNECTED	60.16	72.4	* A-N	20053.8	72.4	CONNECTED	60.16
TOTAL DEMAND	60.16	72.4	* B-N	20053.8	72.4	DEMAND	60.16
TOTAL DESIGN	67.68	81.4	* C-N	20053.8	72.4	DESIGN	67.68

PANEL: C-ND1D1 | OC DEVICE TYPE: Breaker | ENCLOSURE: NEMA 1 | MAINS(A): 2400A MCB | CONTINUOUS(A): 2400
LOCATION: RM 1D32 | DEVICE FAMILY: Bolt On | MOUNTING: Surface | WIRING: 3-Phase 4-Wire | BUS SC RATING(A) 42000
FED FROM: SWBD NH1 | VOLTAGE: 480/277 | FAULT CURRENT(A): 39515

CUBICLE NO	DESCRIPTION	CONNECTED kVA	DEMAND kVA	DESIGN kVA	DESIGN AVE AMPS	OC DEVICE TYPE	SIZE	P	NOTES
1	C-ND1D2_CBL	27.47	27.47	29.96	36.03		125	3	
2	SPD	0.00	0.00	0.00	0.00		30	3	
3	C-UPSD-1_CBL	21.88	21.29	21.29	25.61		50	3	
4	C-UPSD-1 BYPASS_CBL	0.00	0.00	0.00	0.00		50	3	Out of Service
5	C-NH1D1_CBL	111.86	80.59	87.51	105.25		400	3	
6	DS C-NP1C1_CBL	101.67	70.36	70.36	84.63		125	3	
7	DS C-NP1C2_CBL	142.94	89.65	89.65	107.83		200	3	
8	C-ND1B1_CBL	60.16	60.16	67.68	81.41		225	3	
9	DS C-NP1B1_CBL	69.85	46.81	46.81	56.30		125	3	
10	C-ND1A1_CBL	87.00	87.00	87.00	104.64		225	3	
11	C-NH1A1_CBL	102.35	72.16	77.34	93.02		400	3	
12	C-ND2C1_CBL	409.30	409.30	462.30	556.06		800	3	
13	C-NH2C1_CBL	124.35	80.66	85.48	102.82		400	3	
14	DS C-NP2B2_CBL	91.86	54.29	54.29	65.30		125	3	
15	DS C-NP2B1_CBL	59.27	37.84	37.84	45.51		125	3	
16	C-ND2A1_CBL	300.00	300.00	353.00	424.59		800	3	
17	C-NH2A1_CBL	137.75	89.26	94.23	113.34		400	3	
18	SPARE	0.00	0.00	0.00	0.00		125	3	
19	SPARE	0.00	0.00	0.00	0.00		125	3	
20	SPACE	0.00	0.00	0.00	0.00		0	3	

ALL CONNECTED	KVA	3P AVE AMPS	* PHASE TOTALS	VA	AMPS	BUS TOTALS	KVA
TOTAL CONNECTED	1847.71	2222.4	* A-N	615902.8	2222.4	CONNECTED	1847.71
TOTAL DEMAND	1481.84	1782.4	* B-N	615902.8	2222.4	DEMAND	1481.84
TOTAL DESIGN	1559.21	1875.4	* C-N	615902.8	2222.4	DESIGN	1559.21

PANEL INDEX	
C-LH2C1	C-ND1A1
C-ND1B1	C-ND1D1

SYM	DESCRIPTION	DATE
	FINAL CORRECTED SET	03/26/14

NAVFAC

STATE OF MARYLAND PAUL T. MCGINN REGISTERED PROFESSIONAL ENGINEER 26/14

HDR
ARCHITECTURE | ENGINEERING & CONSULTING
1101 KING STREET
SUITE 400
ALEXANDRIA, VIRGINIA 22314
703-518-8500

APPROVED
FOR COMMANDER NAVFAC
ACTIVITY
SATISFACTORY TO DATE

DES	KM	DRW	KM	CHK	GK
PMDM	CHEMENJU/HILL				
BRANCH MANAGER	N/A				
CHIEF ENG/ARCH	TOM COX				

DEPARTMENT OF THE NAVY
NAVAL FACILITIES ENGINEERING COMMAND
COMPONENT NAME
NAVAL FACILITIES ENGINEERING COMMAND – AGENCY
BASE, CITY, STATE
BETHESDA, MD
PROJECT STATION/INSTALLATION
P125 - TEMPORARY MEDICAL FACILITIES
PACKAGE 2 - CLINIC BUILDING
ELECTRICAL - PANEL SCHEDULE SHEET 2

SCALE: 12" = 1'-0"
EFPROJECT NO.: 1151333
CONSTR. CONTR. NO.: N62470-09-D-9044
NAVFAC DRAWING NO.: 13066101
SHEET OF 0
E-702

C:\v61\9127\4\MEP-F2-CENTRAL_bpongsud.rvt 3/19/2014 4:12:43 PM

PANEL: C-ND1D2 | LOCATION: RM 1D32 | FED FROM: C-ND1D1
OC DEVICE TYPE: Breaker | DEVICE FAMILY: Bolt On
ENCLOSURE: NEMA 1 | MOUNTING: Surface | VOLTAGE: 480/277
MAINS(A): MLO | WIRING: 3-Phase 4-Wire
CONTINUOUS(A): 225 | BUS SC RATING(A): 42000 | FAULT CURRENT(A): 33306

CKT	DESCRIPTION	NOTES	DEMAND CODE	VA	OC AMPS P	PHASE	OC AMPS P	VA	DEMAND CODE	NOTES	DESCRIPTION	CKT
1	UH-3		HEATING 2	3000	20 1	A	20 1	0	SPARE		SPARE	2
3	ESH-1 RM 1D10		HEATING	9965	20 3	B	20 1	1500	HEATING 2		VAV RM 1D27	4
5	''			-	''	C	20 1	3000	HEATING 2		VAV RM 1D06	6
7	''			-	''	A	20 3	5000	HEATING 2		VAV RM 1D27	8
9	VAV RM 1D25		HEATING 2	5000	20 3	B	''	-			''	10
11	''			-	''	C	''	-			''	12
13	''			-	''	A	30 3	0	GEN		SPD	14
15	SPARE		SPARE	0	20 1	B	''	-			''	16
17	SPARE		SPARE	0	20 1	C	''	-			''	18
19	SPARE		SPARE	0	20 1	A	20 1	0	SPARE		SPARE	20
21	SPARE		SPARE	0	20 1	B	20 1	0	SPARE		SPARE	22
23	SPARE		SPARE	0	20 1	C	20 1	0	SPARE		SPARE	24
25	SPARE		SPARE	0	20 1	A	20 1	0	SPARE		SPARE	26
27	SPARE		SPARE	0	20 1	B	20 1	0	SPARE		SPARE	28
29	SPARE		SPARE	0	20 1	C	20 1	0	SPARE		SPARE	30
31	SPACE		SPACE	0	0 1	A	0 1	0	SPACE		SPACE	32
33	SPACE		SPACE	0	0 1	B	0 1	0	SPACE		SPACE	34
35	SPACE		SPACE	0	0 1	C	0 1	0	SPACE		SPACE	36
37	SPACE		SPACE	0	0 1	A	0 1	0	SPACE		SPACE	38
39	SPACE		SPACE	0	0 1	B	0 1	0	SPACE		SPACE	40
41	SPACE		SPACE	0	0 1	C	0 1	0	SPACE		SPACE	42

ALL CONNECTED	KVA	3P AVE AMPS	* PHASE TOTALS	VA	AMPS	BUS TOTALS	KVA
TOTAL CONNECTED	27.47	33.0	* A-N	9655.0	34.8	CONNECTED	27.47
TOTAL DEMAND	27.47	33.0	* B-N	8155.0	29.4	DEMAND	27.47
TOTAL DESIGN	29.96	36.0	* C-N	9655.0	34.8	DESIGN	29.96

PANEL: C-ND2A1 | LOCATION: RM 2A34 | FED FROM: C-ND1D1
OC DEVICE TYPE: Breaker | DEVICE FAMILY: Bolt On
ENCLOSURE: NEMA 1 | MOUNTING: Surface | VOLTAGE: 480/277
MAINS(A): MLO | WIRING: 3-Phase 4-Wire
CONTINUOUS(A): 800 | BUS SC RATING(A): 22000 | FAULT CURRENT(A): 17066

CKT	DESCRIPTION	NOTES	DEMAND CODE	VA	OC AMPS P	PHASE	OC AMPS P	VA	DEMAND CODE	NOTES	DESCRIPTION	CKT
1	UH-5 RM 2A99M		HEATING 1	3000	20 1	A	300 3	212000	NONE		C-RTU-4_CBL	2
3	UH-4 RM 2A99A		HEATING 1	3000	20 1	B	''	-			''	4
5	C-CU-7A_CBL		NONE	6000	30 3	C	''	-			''	6
7	''			-	''	A	20 3	10000	NONE		C-CU-7B_CBL	8
9	''			-	''	B	''	-			''	10
11	C-CU-7C_CBL		NONE	10000	30 3	C	''	-			''	12
13	''			-	''	A	30 3	10000	NONE		C-CU-4A_CBL	14
15	''			-	''	B	''	-			''	16
17	C-CU-4B_CBL		NONE	12000	30 3	C	''	-			''	18
19	''			-	''	A	0 1	0	SPACE		SPACE	20
21	''			-	''	B	0 1	0	SPACE		SPACE	22
23	C-CU-6C_CBL		NONE	12000	0 3	C	0 1	0	SPACE		SPACE	24
25	''			-	''	A	30 3	10000	NONE		C-CU-6B_CBL	26
27	''			-	''	B	''	-			''	28
29	C-CU-6A_CBL		NONE	12000	30 3	C	''	-			''	30
31	''			-	''	A	30 3	0	GEN		SPD	32
33	''			-	''	B	''	-			''	34
35	SPARE		SPARE	0	20 1	C	''	-			''	36
37	SPARE		SPARE	0	20 1	A	20 1	0	SPARE		SPARE	38
39	SPARE		SPARE	0	20 1	B	20 1	0	SPARE		SPARE	40
41	SPARE		SPARE	0	20 1	C	20 1	0	SPARE		SPARE	42

ALL CONNECTED	KVA	3P AVE AMPS	* PHASE TOTALS	VA	AMPS	BUS TOTALS	KVA
TOTAL CONNECTED	300.00	360.8	* A-N	101000.0	364.5	CONNECTED	300.00
TOTAL DEMAND	300.00	360.8	* B-N	101000.0	364.5	DEMAND	300.00
TOTAL DESIGN	353.00	424.6	* C-N	98000.0	353.6	DESIGN	353.00

PANEL: C-ND2C1 | LOCATION: RM 2C38 | FED FROM: C-ND1D1
OC DEVICE TYPE: Breaker | DEVICE FAMILY: Bolt On
ENCLOSURE: NEMA 1 | MOUNTING: Surface | VOLTAGE: 480/277
MAINS(A): MLO | WIRING: 3-Phase 4-Wire
CONTINUOUS(A): 800 | BUS SC RATING(A): 35000 | FAULT CURRENT(A): 27298

CKT	DESCRIPTION	NOTES	DEMAND CODE	VA	OC AMPS P	PHASE	OC AMPS P	VA	DEMAND CODE	NOTES	DESCRIPTION	CKT
1	C-RTU-1_CBL		NONE	25100	40 3	A	100 3	63200	NONE		C-RTU-2_CBL	2
3	''			-	''	B	''	-			''	4
5	''			-	''	C	''	-			''	6
7	C-RTU-3_CBL		NONE	212000	300 3	A	20 1	3000	HEATING 1		UH-6 RM 2C99C	8
9	''			-	''	B	20 1	0	SPARE		SPARE	10
11	''			-	''	C	20 1	0	SPARE		SPARE	12
13	C-CU-3B_CBL		NONE	10000	30 3	A	30 3	12000	NONE		C-CU-3C_CBL	14
15	''			-	''	B	''	-			''	16
17	''			-	''	C	''	-			''	18
19	C-CU-2C_CBL		NONE	10000	30 3	A	30 3	10000	NONE		C-CU-3A_CBL	20
21	''			-	''	B	''	-			''	22
23	''			-	''	C	''	-			''	24
25	C-CU-2A_CBL		NONE	6000	30 3	A	30 3	10000	NONE		C-CU-2B_CBL	26
27	''			-	''	B	''	-			''	28
29	''			-	''	C	''	-			''	30
31	C-CU-5B_CBL		NONE	10000	30 3	A	30 3	10000	NONE		C-CU-5C_CBL	32
33	''			-	''	B	''	-			''	34
35	''			-	''	C	''	-			''	36
37	C-CU-1B_CBL		NONE	12000	30 3	A	30 3	6000	NONE		C-CU-5A_CBL	38
39	''			-	''	B	''	-			''	40
41	''			-	''	C	''	-			''	42
43	SPD		GENERAL LOAD	0	30 3	A	30 3	10000	NONE		C-CU-1A_CBL	44
45	''			-	''	B	''	-			''	46
47	''			-	''	C	''	-			''	48
49	SPARE		SPARE	0	20 1	A	20 1	0	SPARE		SPARE	50
51	SPARE		SPARE	0	20 1	B	20 1	0	SPARE		SPARE	52
53	SPARE		SPARE	0	20 1	C	20 1	0	SPARE		SPARE	54
55	SPACE		SPACE	0	0 1	A	0 1	0	SPACE		SPACE	56
57	SPACE		SPACE	0	0 1	B	0 1	0	SPACE		SPACE	58
59	SPACE		SPACE	0	0 1	C	0 1	0	SPACE		SPACE	60

ALL CONNECTED	KVA	3P AVE AMPS	* PHASE TOTALS	VA	AMPS	BUS TOTALS	KVA
TOTAL CONNECTED	409.30	492.3	* A-N	138433.3	499.5	CONNECTED	409.30
TOTAL DEMAND	409.30	492.3	* B-N	135433.3	488.7	DEMAND	409.30
TOTAL DESIGN	462.30	556.1	* C-N	135433.3	488.7	DESIGN	462.30

PANEL: C-NH1A1 | LOCATION: RM 1A46 | FED FROM: C-ND1D1
OC DEVICE TYPE: Breaker | DEVICE FAMILY: Bolt On
ENCLOSURE: NEMA 1 | MOUNTING: Surface | VOLTAGE: 480/277
MAINS(A): MLO | WIRING: 3-Phase 4-Wire
CONTINUOUS(A): 400 | BUS SC RATING(A): 42000 | FAULT CURRENT(A): 10381

CKT	DESCRIPTION	NOTES	DEMAND CODE	VA	OC AMPS P	PHASE	OC AMPS P	VA	DEMAND CODE	NOTES	DESCRIPTION	CKT
1	LTS		LIGHTING	1844	20 1	A	20 1	3441	NONE		C-LH1A1_CBL	2
3	LTS		LIGHTING	1796	20 1	B	20 1	0	SPARE		SPARE	4
5	LTS		LIGHTING	2555	20 1	C	20 1	0	SPARE		SPARE	6
7	LTS		LIGHTING	1078	20 1	A	20 1	0	SPARE		SPARE	8
9	LTS		LIGHTING	2030	20 1	B	20 1	0	SPARE		SPARE	10
11	LTS		LIGHTING	1837	20 1	C	20 1	0	SPARE		SPARE	12
13	LTS		LIGHTING	2353	20 1	A	20 1	0	SPARE		SPARE	14
15	LTS		LIGHTING	1735	20 1	B	20 1	0	SPARE		SPARE	16
17	LTS		LIGHTING	2028	20 1	C	20 1	0	SPARE		SPARE	18
19	SPARE		SPARE	0	20 1	A	20 1	0	SPARE		SPARE	20
21	SPARE		SPARE	0	20 1	B	20 1	0	SPARE		SPARE	22
23	SPARE		SPARE	0	20 1	C	20 1	0	SPARE		SPARE	24
25	SPARE		SPARE	0	20 1	A	20 1	0	SPARE		SPARE	26
27	SPARE		SPARE	0	20 1	B	20 1	0	SPARE		SPARE	28
29	SPARE		SPARE	0	20 1	C	20 1	0	SPARE		SPARE	30
31	SPACE		SPACE	0	0 1	A	0 1	0	SPACE		SPACE	32
33	SPACE		SPACE	0	0 1	B	0 1	0	SPACE		SPACE	34
35	SPACE		SPACE	0	0 1	C	0 1	0	SPACE		SPACE	36
37	SPACE		SPACE	0	0 1	A	125 3	81655	NONE		XF C-NP1A1_CBL	38
39	SPACE		SPACE	0	0 1	B	''	-			''	40
41	SPACE		SPACE	0	0 1	C	''	-			''	42

ALL CONNECTED	KVA	3P AVE AMPS	* PHASE TOTALS	VA	AMPS	BUS TOTALS	KVA
TOTAL CONNECTED	102.35	123.1	* A-N	35934.3	129.7	CONNECTED	102.35
TOTAL DEMAND	72.16	86.8	* B-N	32779.3	118.3	DEMAND	72.16
TOTAL DESIGN	77.34	93.0	* C-N	33638.3	121.4	DESIGN	77.34

PANEL INDEX	
C-ND1D2	C-ND2A1
C-ND2C1	C-NH2A1

SYM	DESCRIPTION	DATE
	FINAL CORRECTED SET	03/26/14

NAVFAC

STATE OF MARYLAND
DAVID C. BECHTOL
No. 15006
REGISTERED PROFESSIONAL ENGINEER
3/26/14

HDR
ARCHITECTURE | ENGINEERING & CONSULTING
1101 KING STREET
SUITE 400
ALEXANDRIA, VIRGINIA 22314
703-518-8500

APPROVED

FOR COMMANDER NAVFAC

ACTIVITY

SATISFACTORY TO DATE

DES KM | DRW KM | CHK GM
PM/DM CHEMENJU/HILL
BRANCH MANAGER N/A
CHIEF ENG/ARCH TOM COX

DEPARTMENT OF THE NAVY
NAVAL FACILITIES ENGINEERING COMMAND
NAVAL FACILITIES ENGINEERING COMMAND ~ AGENCY
COMPONENT NAME
BASE - CITY, STATE
PROJECT STATION/INSTALLATION
BETHESDA, MD
P125 - TEMPORARY MEDICAL FACILITIES
PACKAGE 2 - CLINIC BUILDING
ELECTRICAL - PANEL SCHEDULE SHEET 3

SCALE: 12" = 1'-0"
EPROJECT NO.: 1151333
CONSTR. CONTR. NO. N62470-09-D-9044
NAVFAC DRAWING NO. 13066103
SHEET OF 0

E-703

C:\rvt\191274-MEP-F2-CENTRAL_tpongsud.rvt 3/19/2014 4:12:45 PM

PANEL: C-NH1D1 | OC DEVICE TYPE: Breaker | ENCLOSURE: NEMA 1 | MAINS(A): MLO | CONTINUOUS(A): 400
LOCATION: RM 1D32 | DEVICE FAMILY: Bolt On | MOUNTING: Surface | WIRING: 3-Phase 4-Wire | BUS SC RATING(A) 42000
FED FROM: C-ND1D1 | VOLTAGE: 480/277 | FAULT CURRENT(A): 35713

CKT	DESCRIPTION	NOTES	DEMAND CODE	VA	OC AMPS P	PHASE	OC AMPS P	VA	DEMAND CODE	NOTES	DESCRIPTION	CKT
1	LTS		LIGHTING	1999	20 1	A	20 1	0	SPARE		SPARE	2
3	LTS		LIGHTING	2072	20 1	B	20 1	0	SPARE		SPARE	4
5	LTS		LIGHTING	2205	20 1	C	20 1	3678	NONE		C-LH1D1_CBL	6
7	LTS		LIGHTING	2176	20 1	A	20 1	0	SPARE		SPARE	8
9	LTS		LIGHTING	2057	20 1	B	20 1	0	SPARE		SPARE	10
11	LTS		LIGHTING	1770	20 1	C	20 1	0	SPARE		SPARE	12
13	LTS		LIGHTING	1679	20 1	A	20 1	0	SPARE		SPARE	14
15	LTS		LIGHTING	1535	20 1	B	20 1	0	SPARE		SPARE	16
17	LTS		LIGHTING	2140	20 1	C	20 1	0	SPARE		SPARE	18
19	LTS		LIGHTING	2072	20 1	A	20 1	0	SPARE		SPARE	20
21	LTS		LIGHTING	2064	20 1	B	20 1	0	SPARE		SPARE	22
23	LTS		LIGHTING	2224	20 1	C	20 1	0	SPARE		SPARE	24
25	SPARE		SPARE	0	20 1	A	20 1	0	SPARE		SPARE	26
27	SPARE		SPARE	0	20 1	B	20 1	0	SPARE		SPARE	28
29	SPARE		SPARE	0	20 1	C	20 1	0	SPARE		SPARE	30
31	SPACE		SPACE	0	0 1	A	0 1	0	SPACE		SPACE	32
33	SPACE		SPACE	0	0 1	B	0 1	0	SPACE		SPACE	34
35	SPACE		SPACE	0	0 1	C	0 1	0	SPACE		SPACE	36
37	SPACE		SPACE	0	0 1	A	125 3	84188	NONE		XF_C-NP1D1_CBL	38
39	SPACE		SPACE	0	0 1	B	"	-			"	40
41	SPACE		SPACE	0	0 1	C	"	-			"	42

ALL CONNECTED	KVA	3P AVE AMPS	* PHASE TOTALS	VA	AMPS	BUS TOTALS	KVA
TOTAL CONNECTED	108.18	130.1	* A-N	35988.7	129.9	CONNECTED	111.86
TOTAL DEMAND	76.91	92.5	* B-N	35790.7	129.1	DEMAND	80.59
TOTAL DESIGN	82.91	99.7	* C-N	36401.7	131.4	DESIGN	87.51

PANEL: C-NH2A1 | OC DEVICE TYPE: Breaker | ENCLOSURE: NEMA 1 | MAINS(A): MLO | CONTINUOUS(A): 400
LOCATION: RM 2A34 | DEVICE FAMILY: Bolt On | MOUNTING: Surface | WIRING: 3-Phase 4-Wire | BUS SC RATING(A) 42000
FED FROM: C-ND1D1 | VOLTAGE: 480/277 | FAULT CURRENT(A): 9453

CKT	DESCRIPTION	NOTES	DEMAND CODE	VA	OC AMPS P	PHASE	OC AMPS P	VA	DEMAND CODE	NOTES	DESCRIPTION	CKT
1	LTS		LIGHTING	2012	20 1	A	20 1	1525	NONE		C-LH2A1_CBL	2
3	LTS		LIGHTING	1906	20 1	B	20 1	0	SPARE		SPARE	4
5	LTS		LIGHTING	2181	20 1	C	20 1	0	SPARE		SPARE	6
7	LTS		LIGHTING	923	20 1	A	20 1	0	SPARE		SPARE	8
9	LTS		LIGHTING	2179	20 1	B	20 1	0	SPARE		SPARE	10
11	LTS		LIGHTING	2404	20 1	C	20 1	0	SPARE		SPARE	12
13	LTS		LIGHTING	2086	20 1	A	20 1	0	SPARE		SPARE	14
15	LTS		LIGHTING	2485	20 1	B	20 1	0	SPARE		SPARE	16
17	LTS		LIGHTING	2160	20 1	C	20 1	0	SPARE		SPARE	18
19	SPARE		SPARE	0	20 1	A	20 1	0	SPARE		SPARE	20
21	SPARE		SPARE	0	20 1	B	20 1	0	SPARE		SPARE	22
23	SPARE		SPARE	0	20 1	C	20 1	0	SPARE		SPARE	24
25	SPARE		SPARE	0	20 1	A	20 1	0	SPARE		SPARE	26
27	SPARE		SPARE	0	20 1	B	20 1	0	SPARE		SPARE	28
29	SPARE		SPARE	0	20 1	C	20 1	0	SPARE		SPARE	30
31	SPACE		SPACE	0	0 1	A	0 1	0	SPACE		SPACE	32
33	SPACE		SPACE	0	0 1	B	0 1	0	SPACE		SPACE	34
35	SPACE		SPACE	0	0 1	C	0 1	0	SPACE		SPACE	36
37	SPACE		SPACE	0	0 1	A	200 3	117892	NONE		XF_C-NP2A1_CBL	38
39	SPACE		SPACE	0	0 1	B	"	-			"	40
41	SPACE		SPACE	0	0 1	C	"	-			"	42

ALL CONNECTED	KVA	3P AVE AMPS	* PHASE TOTALS	VA	AMPS	BUS TOTALS	KVA
TOTAL CONNECTED	137.75	165.7	* A-N	45843.3	165.4	CONNECTED	137.75
TOTAL DEMAND	89.26	107.4	* B-N	45867.3	165.5	DEMAND	89.26
TOTAL DESIGN	94.23	113.3	* C-N	46042.3	166.1	DESIGN	94.23

PANEL: C-NH2C1 | OC DEVICE TYPE: Breaker | ENCLOSURE: NEMA 1 | MAINS(A): MLO | CONTINUOUS(A): 400
LOCATION: RM 2C38 | DEVICE FAMILY: Bolt On | MOUNTING: Surface | WIRING: 3-Phase 4-Wire | BUS SC RATING(A) 42000
FED FROM: C-ND1D1 | VOLTAGE: 480/277 | FAULT CURRENT(A): 18875

CKT	DESCRIPTION	NOTES	DEMAND CODE	VA	OC AMPS P	PHASE	OC AMPS P	VA	DEMAND CODE	NOTES	DESCRIPTION	CKT
1	LTS		LIGHTING	1477	20 1	A	20 1	0	SPARE		SPARE	2
3	LTS		LIGHTING	2088	20 1	B	20 1	0	SPARE		SPARE	4
5	LTS		LIGHTING	1445	20 1	C	20 1	1160	NONE		C-LH2C1_CBL	6
7	LTS		LIGHTING	2077	20 1	A	20 1	0	SPARE		SPARE	8
9	LTS		LIGHTING	2013	20 1	B	20 1	0	SPARE		SPARE	10
11	LTS		LIGHTING	2251	20 1	C	20 1	0	SPARE		SPARE	12
13	LTS		LIGHTING	2347	20 1	A	20 1	0	SPARE		SPARE	14
15	LTS		LIGHTING	2077	20 1	B	20 1	0	SPARE		SPARE	16
17	LTS		LIGHTING	1446	20 1	C	20 1	0	SPARE		SPARE	18
19	LTS		LIGHTING	885	20 1	A	20 1	0	SPARE		SPARE	20
21	SPARE		SPARE	0	20 1	B	20 1	0	SPARE		SPARE	22
23	SPARE		SPARE	0	20 1	C	20 1	0	SPARE		SPARE	24
25	SPARE		SPARE	0	20 1	A	20 1	0	SPARE		SPARE	26
27	SPARE		SPARE	0	20 1	B	20 1	0	SPARE		SPARE	28
29	SPARE		SPARE	0	20 1	C	20 1	0	SPARE		SPARE	30
31	SPACE		SPACE	0	0 1	A	0 1	0	SPACE		SPACE	32
33	SPACE		SPACE	0	0 1	B	0 1	0	SPACE		SPACE	34
35	SPACE		SPACE	0	0 1	C	0 1	0	SPACE		SPACE	36
37	SPACE		SPACE	0	0 1	A	70 3	105084	NONE		XF_C-NP2C1_CBL	38
39	SPACE		SPACE	0	0 1	B	"	-			"	40
41	SPACE		SPACE	0	0 1	C	"	-			"	42

ALL CONNECTED	KVA	3P AVE AMPS	* PHASE TOTALS	VA	AMPS	BUS TOTALS	KVA
TOTAL CONNECTED	123.19	148.2	* A-N	41814.0	150.9	CONNECTED	124.35
TOTAL DEMAND	79.50	95.6	* B-N	41206.0	148.7	DEMAND	80.66
TOTAL DESIGN	84.03	101.1	* C-N	40170.0	145.0	DESIGN	85.48

PANEL INDEX	
C-NH1D1	C-NH2A1
C-NH2C1	

SYM	DESCRIPTION	DATE
	FINAL CORRECTED SET	03/26/14

NAVFAC

STATE OF MARYLAND PAUL G. MCGINN REGISTERED PROFESSIONAL ENGINEER 26/14

HDR
ARCHITECTURE | ENGINEERING & CONSULTING
1101 KING STREET
SUITE 400
ALEXANDRIA, VIRGINIA 22314
703-518-8500

APPROVED
FOR COMMANDER NAVFAC
ACTIVITY
SATISFACTORY TO DATE

DES KM | DRW KM | CHK GM
PMDM CHEMENJU/HILL
BRANCH MANAGER N/A
CHIEF ENG/ARCH TOM COX

DEPARTMENT OF THE NAVY
NAVAL FACILITIES ENGINEERING COMMAND
COMPONENT NAME
NAVAL FACILITIES ENGINEERING COMMAND — AGENCY
BASE, CITY, STATE
BETHESDA, MD
PROJECT STATION/INSTALLATION
P125 - TEMPORARY MEDICAL FACILITIES
PACKAGE 2 - CLINIC BUILDING
ELECTRICAL - PANEL SCHEDULE SHEET 4

SCALE: 12" = 1'-0"
EPROJECT NO.: 1151333
CONSTR. CONTR. NO. N62470-09-D-9044
NAVFAC DRAWING NO. 13066104
SHEET OF 0
E-704

C:\n51912T4\MEP-F2-CENTRAL_bpongsud.rvt 3/19/2014 4:12:47 PM

PANEL: C-NL1A1 | LOCATION: RM 1A46 | FED FROM: C-NP1A1
OC DEVICE TYPE: Breaker | DEVICE FAMILY: Bolt On
ENCLOSURE: NEMA 1 | MOUNTING: Surface | VOLTAGE: 208/120
MAINS(A): MLO | WIRING: 3-Phase 4-Wire
CONTINUOUS(A): 125 | BUS SC RATING(A): 10000 | FAULT CURRENT(A): 5251

CKT	DESCRIPTION	NOTES	DEMAND CODE	VA	OC AMPS P	PHASE	OC AMPS P	VA	DEMAND CODE	NOTES	DESCRIPTION	CKT
1	ELEC RM 1A46		RECEPTACLES	360	20 1	A	20 1	900	RECEPTACLES		RECEPT RM 1A99B, F, K	2
3	TREAT RM 1A39		RECEPTACLES	360	20 1	B	20 1	720	RECEPTACLES		RECEPT RM 1A52	4
5	TREAT RM 1A39, 40		RECEPTACLES	360	20 1	C	20 1	900	RECEPTACLES		RECEPT RM 1A54	6
7	TREAT RM 1A40		RECEPTACLES	360	20 1	A	20 1	540	RECEPTACLES		RECEPT RM 1A33	8
9	TREAT RM 1A40		RECEPTACLES	360	20 1	B	20 1	540	RECEPTACLES		RECEPT RM 1A33	10
11	TREAT RM 1A41		RECEPTACLES	360	20 1	C	20 1	540	RECEPTACLES		RECEPT RM 1A38, 38A	12
13	TREAT RM 1A41		RECEPTACLES	360	20 1	A	20 1	1500	RECEPTACLES		RECEPT RM 1A38B	14
15	TREAT RM 1A41, 42		RECEPTACLES	360	20 1	B	20 1	360	RECEPTACLES		RECEPT RM 1A38	16
17	TREAT RM 1A42		RECEPTACLES	360	20 1	C	20 1	900	RECEPTACLES		RECEPT RM 1A02B, 02	18
19	TREATMENT RM 1A42		RECEPTACLES	820	20 1	A	20 1	720	RECEPTACLES		RECEPT RM 1A02A, A01	20
21	TREAT RM 1A39		RECEPTACLES	720	20 1	B	20 1	540	RECEPTACLES		RECEPT RM 1A02A, A02	22
23	CUB RM 1A53A, B		RECEPTACLES	540	20 1	C	20 1	900	RECEPTACLES		RECEPT RM 1A01	24
25	CUB RM 1A53A, B		RECEPTACLES	540	20 1	A	20 1	1080	RECEPTACLES		RECEPT RM 1A04	26
27	CONF RM 1A33		RECEPTACLES	1800	20 1	B	20 1	1080	RECEPTACLES		RECEPT RM 1A05	28
29	CONF RM 1A33		RECEPTACLES	1500	20 1	C	20 1	1080	RECEPTACLES		RECEPT RM 1A06	30
31	CONF RM 1A33		RECEPTACLES	1500	20 1	A	20 1	540	RECEPTACLES		RECEPT RM 1A04, 05, 06	32
33	EXAM RM 1A26		RECEPTACLES	1080	20 1	B	20 1	360	RECEPTACLES		RECEPT RM 1A30	34
35	EXAM RM 1A28		RECEPTACLES	1080	20 1	C	20 1	540	RECEPTACLES		RECEPT RM 1A30	36
37	EXAM RM 1A26, 28		RECEPTACLES	360	20 1	A	20 1	720	RECEPTACLES		RECEPT RM 1A32	38
39	EWC RM 1A99B		RECEPTACLES	1500	20 1	B	20 1	0	SPARE		SPARE	40
41	SPARE		SPARE	0	20 1	C	20 1	720	RECEPTACLES		RECEPT RM 1A30, 32	42
43	SPARE		SPARE	0	20 1	A	20 1	0	SPARE		SPARE	44
45	SPARE		SPARE	0	20 1	B	20 1	0	SPARE		SPARE	46
47	SPARE		SPARE	0	20 1	C	20 1	0	SPARE		SPARE	48
49	SPARE		SPARE	0	20 1	A	20 1	0	SPARE		SPARE	50
51	SPARE		SPARE	0	20 1	B	20 1	0	SPARE		SPARE	52
53	SPARE		SPARE	0	20 1	C	20 1	0	SPARE		SPARE	54
55	SPACE		SPACE	0	0 1	A	0 1	0	SPACE		SPACE	56
57	SPACE		SPACE	0	0 1	B	0 1	0	SPACE		SPACE	58
59	SPACE		SPACE	0	0 1	C	0 1	0	SPACE		SPACE	60

ALL CONNECTED	KVA	3P AVE AMPS	* PHASE TOTALS	VA	AMPS	BUS TOTALS	KVA
TOTAL CONNECTED	29.86	82.9	* A-N	10300.0	85.8	CONNECTED	29.86
TOTAL DEMAND	19.93	55.3	* B-N	9780.0	81.4	DEMAND	19.93
TOTAL DESIGN	19.93	55.3	* C-N	9780.0	81.4	DESIGN	19.93

PANEL: C-NL1A2 | LOCATION: RM 1A46 | FED FROM: C-NP1A1
OC DEVICE TYPE: Breaker | DEVICE FAMILY: Bolt On
ENCLOSURE: NEMA 1 | MOUNTING: Surface | VOLTAGE: 208/120
MAINS(A): MLO | WIRING: 3-Phase 4-Wire
CONTINUOUS(A): 125 | BUS SC RATING(A): 10000 | FAULT CURRENT(A): 5251

CKT	DESCRIPTION	NOTES	DEMAND CODE	VA	OC AMPS P	PHASE	OC AMPS P	VA	DEMAND CODE	NOTES	DESCRIPTION	CKT
1	COMM RM 1A56		RECEPTACLES	1500	20 1	A	20 1	360	RECEPTACLES		COMM RM 1A56	2
3	COMM RM 1A56		RECEPTACLES	360	20 1	B	30 1	2000	RECEPTACLES		COMM RM 1A56	4
5	PLUMB RM 1A58		RECEPTACLES	720	20 1	C	20 1	900	RECEPTACLES		UTIL RM 1A21	6
7	STOR RM 1A23		RECEPTACLES	900	20 1	A	20 1	1200	RECEPTACLES		TLT RM 1A35, 37	8
9	OFF RM 1A24		RECEPTACLES	360	20 1	B	20 1	720	RECEPTACLES		OFF RM 1A17	10
11	OFF RM 1A24		RECEPTACLES	540	20 1	C	20 1	360	RECEPTACLES		OFF RM 1A17	12
13	OFF RM 1A22, 24		RECEPTACLES	720	20 1	A	20 1	1080	RECEPTACLES		EXAM RM 1A15	14
15	OFF RM 1A22		RECEPTACLES	360	20 1	B	20 1	1080	RECEPTACLES		EXAM RM 1A13	16
17	OFF RM 1A22		RECEPTACLES	540	20 1	C	20 1	1080	RECEPTACLES		EXAM RM 1A11	18
19	OFF RM 1A20		RECEPTACLES	360	20 1	A	20 1	540	RECEPTACLES		EXAM RM 1A11, 13, 15	20
21	OFF RM 1A20		RECEPTACLES	540	20 1	B	20 1	1080	RECEPTACLES		EXAM RM 1A07	22
23	OFF RM 1A18, 20		RECEPTACLES	540	20 1	C	20 1	900	RECEPTACLES		UTIL RM 1A08	24
25	OFF RM 1A18		RECEPTACLES	360	20 1	A	20 1	540	RECEPTACLES		EXAM RM 1A10, 1A07	26
27	OFF RM 1A18		RECEPTACLES	540	20 1	B	20 1	1080	RECEPTACLES		EXAM RM 1A10	28
29	OFF RM 1A16		RECEPTACLES	360	20 1	C	20 1	1080	RECEPTACLES		EXAM RM 1A12	30
31	OFF RM 1A16		RECEPTACLES	540	20 1	A	20 1	1080	RECEPTACLES		EXAM RM 1A14	32
33	OFFICE RM 1A16, 18		RECEPTACLES	540	20 1	B	20 1	360	RECEPTACLES		EXAM RM 1A12, 14	34
35	CORR RM 1A99J		RECEPTACLES	1260	20 1	C	20 1	500	GENERAL LOAD		DOOR RM 1A99B	36
37	RM 1A99E		RECEPTACLES	500	20 1	A	20 1	0	SPARE		SPARE	38
39	SPARE		SPARE	0	20 1	B	20 1	0	SPARE		SPARE	40
41	SPARE		SPARE	0	20 1	C	20 1	0	SPARE		SPARE	42

ALL CONNECTED	KVA	3P AVE AMPS	* PHASE TOTALS	VA	AMPS	BUS TOTALS	KVA
TOTAL CONNECTED	26.64	73.9	* A-N	8840.0	73.6	CONNECTED	26.64
TOTAL DEMAND	18.57	51.5	* B-N	9020.0	75.1	DEMAND	18.57
TOTAL DESIGN	18.57	51.5	* C-N	8780.0	73.1	DESIGN	18.57

PANEL: C-NL1B1 | LOCATION: RM 1B21 | FED FROM: C-NP1B1
OC DEVICE TYPE: Breaker | DEVICE FAMILY: Bolt On
ENCLOSURE: NEMA 1 | MOUNTING: Surface | VOLTAGE: 208/120
MAINS(A): MLO | WIRING: 3-Phase 4-Wire
CONTINUOUS(A): 125 | BUS SC RATING(A): 10000 | FAULT CURRENT(A): 4816

CKT	DESCRIPTION	NOTES	DEMAND CODE	VA	OC AMPS P	PHASE	OC AMPS P	VA	DEMAND CODE	NOTES	DESCRIPTION	CKT
1	OFF RM 1B13		RECEPTACLES	720	20 1	A	20 1	720	RECEPTACLES		RECEPT RM 1B15	2
3	RECEPT RM 1B14		RECEPTACLES	720	20 1	B	20 1	720	RECEPTACLES		RECEPT RM 1B16	4
5	RECEPT RM 1B14, 15, 16		RECEPTACLES	720	20 1	C	20 1	720	RECEPTACLES		RECEPT RM 1B17	6
7	RECEPT RM 1B09C, D, E		RECEPTACLES	900	20 1	A	20 1	540	RECEPTACLES		RECEPT RM 1B17, 18, 32	8
9	RECEPT RM 1B09C, D, E		RECEPTACLES	720	20 1	B	20 1	720	RECEPTACLES		RECEPT RM 1B18	10
11	RECEPT RM 1B08, 09A		RECEPTACLES	720	20 1	C	20 1	1260	RECEPTACLES		RECEPT RM 1B32A	12
13	RECEPT RM 1B09A, B		RECEPTACLES	540	20 1	A	20 1	720	RECEPTACLES		RECEPT RM 1B99B, 20	14
15	RECEPT RM 1B12F, G, H		RECEPTACLES	900	20 1	B	20 1	720	RECEPTACLES		RECEPT RM 1B11	16
17	RECEPT RM 1B12H, J, K		RECEPTACLES	540	20 1	C	20 1	720	RECEPTACLES		RECEPT RM 1B11, 13	18
19	RECEPT RM 1B12D, F, G		RECEPTACLES	540	20 1	A	20 1	720	RECEPTACLES		RECEPT RM 1B05	20
21	RECEPT RM 1B10, 12A, B		RECEPTACLES	540	20 1	B	20 1	900	RECEPTACLES		RECEPT RM 1B11	22
23	RECEPT RM 1B12A-D		RECEPTACLES	900	20 1	C	20 1	720	RECEPTACLES		RECEPT RM 1B08	24
25	RECEPT RM 1B10		RECEPTACLES	900	20 1	A	20 1	1080	RECEPTACLES		RECEPT RM 1B00, 99A	26
27	RECEPT RM 1B08		RECEPTACLES	900	20 1	B	20 1	360	RECEPTACLES		RECEPT RM 1BE1, E2	28
29	PP-3 ELEV SUMP PUMP		GENERAL LOAD	180	20 1	C	20 1	180	GENERAL LOAD		PP-4 ELEV SUMP PUMP	30
31	SPARE		SPARE	0	20 1	A	20 1	0	SPARE		SPARE	32
33	SPARE		SPARE	0	20 1	B	20 1	0	SPARE		SPARE	34
35	SPARE		SPARE	0	20 1	C	20 1	0	SPARE		SPARE	36
37	SPACE		SPACE	0	0 1	A	0 1	0	SPACE		SPACE	38
39	SPACE		SPACE	0	0 1	B	0 1	0	SPACE		SPACE	40
41	SPACE		SPACE	0	0 1	C	0 1	0	SPACE		SPACE	42

ALL CONNECTED	KVA	3P AVE AMPS	* PHASE TOTALS	VA	AMPS	BUS TOTALS	KVA
TOTAL CONNECTED	21.24	59.0	* A-N	7380.0	61.5	CONNECTED	21.24
TOTAL DEMAND	15.80	43.9	* B-N	7200.0	60.0	DEMAND	15.80
TOTAL DESIGN	15.80	43.9	* C-N	6660.0	55.5	DESIGN	15.80

PANEL: C-NL1C1 | LOCATION: RM 1C32 | FED FROM: C-NP1C1
OC DEVICE TYPE: Breaker | DEVICE FAMILY: Bolt On
ENCLOSURE: NEMA 1 | MOUNTING: Surface | VOLTAGE: 208/120
MAINS(A): 225 MLO | WIRING: 3-Phase 4-Wire
CONTINUOUS(A): 225 | BUS SC RATING(A): 10000 | FAULT CURRENT(A): 2804

CKT	DESCRIPTION	NOTES	DEMAND CODE	VA	OC AMPS P	PHASE	OC AMPS P	VA	DEMAND CODE	NOTES	DESCRIPTION	CKT
1	RECEPT RM 1C86A		RECEPTACLES	540	20 1	A	20 1	360	RECEPTACLES		RECEPT RM 1C86A	2
3	RECEPT RM 1C86A		RECEPTACLES	360	20 1	B	20 1	1800	RECEPTACLES		RECEPT RM 1C85A	4
5	RECEPT RM 1C85A		RECEPTACLES	1500	20 1	C	20 1	1500	RECEPTACLES		RECEPT RM 1C85A	6
7	RECEPT RM 1C85A		RECEPTACLES	900	20 1	A	20 1	1200	RECEPTACLES		RECEPT RM 1C85A	8
9	VEND RM 1C85A		RECEPTACLES	1200	20 1	B	20 1	1200	RECEPTACLES		RECEPT RM 1C85A	10
11	RECEPT RM 1C59A		RECEPTACLES	1340	20 1	C	20 1	1340	RECEPTACLES		RECEPT RM 1C60A	12
13	RECEPT RM 1C59A		RECEPTACLES	720	20 1	A	20 1	720	RECEPTACLES		RECEPT RM 1C60A	14
15	EYELANE RM 1C59A		GENERAL LOAD	800	20 1	B	20 1	800	GENERAL LOAD		EYELANE RM 1C60A	16
17	RECEPT RM 1C57A		RECEPTACLES	1340	20 1	C	20 1	1340	RECEPTACLES		RECEPT RM 1C58A	18
19	RECEPT RM 1C57A		RECEPTACLES	720	20 1	A	20 1	720	RECEPTACLES		RECEPT RM 1C58A	20
21	EYELANE RM 1C57A		GENERAL LOAD	800	20 1	B	20 1	800	GENERAL LOAD		EYELANE RM 1C58A	22
23	RECEPT RM 1C57A, 59A		RECEPTACLES	360	20 1	C	20 1	540	RECEPTACLES		RECEPT RM 1C56A, 58A	24
25	RECEPT RM 1C55A		RECEPTACLES	1340	20 1	A	20 1	1340	RECEPTACLES		RECEPT RM 1C56A	26
27	RECEPT RM 1C55		RECEPTACLES	720	20 1	B	20 1	720	RECEPTACLES		RECEPT RM 1C56A	28
29	EYELANE RM 1C55A		GENERAL LOAD	800	20 1	C	20 1	800	GENERAL LOAD		EYELANE RM 1C56A	30
31	RECEPT RM 1C53A		RECEPTACLES	1340	20 1	A	20 1	1340	RECEPTACLES		RECEPT RM 1C54A	32
33	RECEPT RM 1C53A		RECEPTACLES	720	20 1	B	20 1	720	RECEPTACLES		RECEPT RM 1C54A	34
35	EYELANE RM 1C53A		GENERAL LOAD	800	20 1	C	20 1	800	GENERAL LOAD		EYELANE RM 1C54A	36
37	RECEPT RM 1C51A, 3A		GENERAL LOAD	540	20 1	A	20 1	540	RECEPTACLES		RECEPT RM 1C50, 52, 54	38
39	RECEPT RM 1C51A		RECEPTACLES	1340	20 1	B	20 1	1340	RECEPTACLES		RECEPT RM 1C52A, 29B	40
41	RECEPT RM 1C51A		RECEPTACLES	720	20 1	C	20 1	720	RECEPTACLES		RECEPT RM 1C52A	42
43	EYELANE RM 1C51A		GENERAL LOAD	800	20 1	A	20 1	800	GENERAL LOAD		EYELANE RM 1C52A	44
45	RECEPT RM 1C43A		RECEPTACLES	720	20 1	B	20 1	1340	RECEPTACLES		RECEPT RM 1C50A	46
47	RECEPT RM 1B99JA, 99F		RECEPTACLES	720	20 1	C	20 1	720	RECEPTACLES		RECEPT RM 1C50A	48
49	SPARE		SPARE	0	20 1	A	20 1	800	GENERAL LOAD		EYELANE RM 1C50A	50
51	SPARE		SPARE	0	20 1	B	20 1	1500	RECEPTACLES		RECEPT RM 1B99JA	52
53	SPARE		SPARE	0	20 1	C	20 1	0	SPARE		SPARE	54
55	SPARE		SPARE	0	20 1	A	20 1	0	SPARE		SPARE	56
57	SPARE		SPARE	0	20 1	B	20 1	0	SPARE		SPARE	58
59	SPARE		SPARE	0	20 1	C	20 1	0	SPARE		SPARE	60
61	SPARE		SPARE	0	20 1	A	20 1	0	SPARE		SPARE	62
63	SPARE		SPARE	0	20 1	B	20 1	0	SPARE		SPARE	64
65	SPARE		SPARE	0	20 1	C	20 1	0	SPARE		SPARE	66
67	SPARE		SPARE	0	20 1	A	20 1	0	SPARE		SPARE	68
69	SPARE		SPARE	0	20 1	B	20 1	0	SPARE		SPARE	70
71	SPARE		SPARE	0	20 1	C	20 1	0	SPARE		SPARE	72
73	SPACE		SPACE	0	0 1	A	0 1	0	SPACE		SPACE	74
75	SPACE		SPACE	0	0 1	B	0 1	0	SPACE		SPACE	76
77	SPACE		SPACE	0	0 1	C	0 1	0	SPACE		SPACE	78
79	SPACE		SPACE	0	0 1	A	0 1	0	SPACE		SPACE	80
81	SPACE		SPACE	0	0 1	B	0 1	0	SPACE		SPACE	82
83	SPACE		SPACE	0	0 1	C	0 1	0	SPACE		SPACE	84

ALL CONNECTED	KVA	3P AVE AMPS	* PHASE TOTALS	VA	AMPS	BUS TOTALS	KVA
TOTAL CONNECTED	46.94	130.3	* A-N	14720.0	122.6	CONNECTED	46.94
TOTAL DEMAND	33.14	92.0	* B-N	16880.0	140.6	DEMAND	33.14
TOTAL DESIGN	33.14	92.0	* C-N	15340.0	127.7	DESIGN	33.14

PANEL INDEX	
C-NL1A1	C-NL1A2
C-NL1B1	C-NL1C1

SYM	DESCRIPTION	DATE
	FINAL CORRECTED SET	03/26/14

HDR
ARCHITECTURE | ENGINEERING & CONSULTING
1101 KING STREET
SUITE 400
ALEXANDRIA, VIRGINIA 22314
703-518-8500

APPROVED
FOR COMMANDER NAVFAC
ACTIVITY
SATISFACTORY TO DATE
DES KM | DRW KM | CHK GM
PM/DM CHEMENJU/HILL
BRANCH MANAGER N/A
CHIEF ENG/ARCH TOM COX

DEPARTMENT OF THE NAVY
NAVAL FACILITIES ENGINEERING COMMAND ~ AGENCY
BASE · CITY, STATE: BETHESDA, MD
COMPONENT NAME
PROJECT STATION/INSTALLATION
P125 - TEMPORARY MEDICAL FACILITIES
PACKAGE 2 - CLINIC BUILDING
ELECTRICAL - PANEL SCHEDULE SHEET 5

SCALE: 12" = 1'-0"
EPROJECT NO.: 1151333
CONSTR. CONTR. NO.: N62470-09-D-9044
NAVFAC DRAWING NO.: 13066105
SHEET OF 0
E-705

C:\rvt\191274-MEP-F2-CENTRAL_tpongaud.rvt 3/19/2014 4:12:49 PM

PANEL: C-NL1C2 | OC DEVICE TYPE: Breaker | ENCLOSURE: NEMA 1 | MAINS(A): MLO | CONTINUOUS(A): 225
LOCATION: RM 1C32 | DEVICE FAMILY: Bolt On | MOUNTING: Surface | WIRING: 3-Phase 4-Wire | BUS SC RATING(A) 10000
FED FROM: C-NP1C2 | VOLTAGE: 208/120 | FAULT CURRENT(A): 5641

CKT	DESCRIPTION	NOTES	DEMAND CODE	VA	OC AMPS P	PHASE	OC AMPS P	VA	DEMAND CODE	NOTES	DESCRIPTION	CKT
1	SPARE		SPARE	0	20 1	A	20 1	0	SPARE		SPARE	2
3	SPARE		SPARE	0	20 1	B	20 1	0	SPARE		SPARE	4
5	RECEPT RM 1C00A		RECEPTACLES	540	20 1	C	20 1	360	RECEPTACLES		RECEPT RM 1B99G	6
7	RECEPT RM 1B99		RECEPTACLES	900	20 1	A	20 1	1340	RECEPTACLES		RECEPT RM 1C27	8
9	RECEPT RM 1C83B, F		RECEPTACLES	360	20 1	B	20 1	720	RECEPTACLES		RECEPT RM 1C27	10
11	CUBICLE RM 1C83D		GENERAL LOAD	720	20 1	C	20 1	800	GENERAL LOAD		EYELANE RM 1C27	12
13	CUBICLE RM 1C83D		GENERAL LOAD	720	20 1	A	20 1	1340	RECEPTACLES		RECEPT RM 1C29	14
15	CUBICLE RM 1C83D		GENERAL LOAD	720	20 1	B	20 1	720	RECEPTACLES		RECEPT RM 1C29	16
17	CUBICLE RM 1C18A		RECEPTACLES	720	20 1	C	20 1	800	GENERAL LOAD		EYELANE RM 1C29	18
19	RECEPT RM 1C16		RECEPTACLES	1340	20 1	A	20 1	1340	RECEPTACLES		RECEPT RM 1C31	20
21	RECEPT RM 1C16		RECEPTACLES	720	20 1	B	20 1	720	RECEPTACLES		RECEPT RM 1C31	22
23	EYELANE RM 1C16		GENERAL LOAD	800	20 1	C	20 1	800	GENERAL LOAD		EYELANE RM 1C31	24
25	RECEPT RM 1C14		RECEPTACLES	1340	20 1	A	20 1	540	RECEPTACLES		RECEPT RM 1C27, 29, 31	26
27	RECEPT RM 1C14		RECEPTACLES	720	20 1	B	20 1	1340	RECEPTACLES		RECEPT RM 1C33	28
29	EYELANE RM 1C14		GENERAL LOAD	800	20 1	C	20 1	720	RECEPTACLES		RECEPT RM 1C33	30
31	RECEPT RM 1C12		RECEPTACLES	1340	20 1	A	20 1	800	GENERAL LOAD		EYELANE RM 1C33	32
33	RECEPT RM 1C12		RECEPTACLES	720	20 1	B	20 1	1340	RECEPTACLES		RECEPT RM 1C35	34
35	EYELANE RM 1C12		GENERAL LOAD	800	20 1	C	20 1	720	RECEPTACLES		RECEPT RM 1C35	36
37	RECEPT RM 1C12, 14, 16		RECEPTACLES	540	20 1	A	20 1	800	GENERAL LOAD		EYELANE RM 1C35	38
39	RECEPT RM 1C08		RECEPTACLES	1340	20 1	B	20 1	1340	RECEPTACLES		RECEPT RM 1C37	40
41	RECEPT RM 1C08		RECEPTACLES	720	20 1	C	20 1	720	RECEPTACLES		RECEPT RM 1C37	42
43	EYELANE RM 1C08		GENERAL LOAD	800	20 1	A	20 1	800	GENERAL LOAD		EYELANE RM 1C37	44
45	RECEPT RM 1C06		RECEPTACLES	1340	20 1	B	20 1	540	RECEPTACLES		RECEPT RM 1C33, 35, 37	46
47	RECEPT RM 1C06		RECEPTACLES	720	20 1	C	20 1	1340	RECEPTACLES		RECEPT RM 1C39	48
49	EYELANE RM 1C06		GENERAL LOAD	800	20 1	A	20 1	720	RECEPTACLES		RECEPT RM 1C39	50
51	RECEPT RM 1C04		RECEPTACLES	1340	20 1	B	20 1	800	GENERAL LOAD		EYELANE RM 1C39	52
53	RECEPT RM 1C04		RECEPTACLES	720	20 1	C	20 1	1340	RECEPTACLES		RECEPT RM 1C41	54
55	EYELANE RM 1C04		GENERAL LOAD	800	20 1	A	20 1	720	RECEPTACLES		RECEPT RM 1C41	56
57	RECEPT RM 1C04, 06, 08		RECEPTACLES	540	20 1	B	20 1	800	GENERAL LOAD		EYELANE RM 1C41	58
59	RECEPT RM 1C20		RECEPTACLES	540	20 1	C	20 1	1340	RECEPTACLES		RECEPT RM 1C18	60
61	RECEPT RM 1C10		RECEPTACLES	1340	20 1	A	20 1	720	RECEPTACLES		RECEPT RM 1C18	62
63	RECEPT RM 1C10		RECEPTACLES	720	20 1	B	20 1	800	GENERAL LOAD		EYELANE RM 1C18	64
65	RECEPT RM 1C10		GENERAL LOAD	800	20 1	C	20 1	540	RECEPTACLES		RECEPT RM 1C18, 39, 41	66
67	RECEPT RM 1C10, 12		RECEPTACLES	360	20 1	A	20 1	0	SPARE		SPARE	68
69	SPARE		SPARE	0	20 1	B	20 1	0	SPARE		SPARE	70
71	SPARE		SPARE	0	20 1	C	20 1	0	SPARE		SPARE	72
73	SPARE		SPARE	0	20 1	A	20 1	0	SPARE		SPARE	74
75	SPARE		SPARE	0	20 1	B	20 1	0	SPARE		SPARE	76
77	SPARE		SPARE	0	20 1	C	20 1	0	SPARE		SPARE	78
79	SPACE		SPACE	0	0 1	A	0 1	0	SPACE		SPACE	80
81	SPACE		SPACE	0	0 1	B	0 1	0	SPACE		SPACE	82
83	SPACE		SPACE	0	0 1	C	0 1	0	SPACE		SPACE	84

ALL CONNECTED	KVA	3P AVE AMPS	* PHASE TOTALS	VA	AMPS	BUS TOTALS	KVA
TOTAL CONNECTED	54.40	151.0	* A-N	19400.0	161.5	CONNECTED	54.40
TOTAL DEMAND	39.68	110.1	* B-N	17640.0	146.9	DEMAND	39.68
TOTAL DESIGN	39.68	110.1	* C-N	17360.0	144.6	DESIGN	39.68

PANEL: C-NL1C3 | OC DEVICE TYPE: Breaker | ENCLOSURE: NEMA 1 | MAINS(A): MLO | CONTINUOUS(A): 225
LOCATION: RM 1C32 | DEVICE FAMILY: Bolt On | MOUNTING: Surface | WIRING: 3-Phase 4-Wire | BUS SC RATING(A) 10000
FED FROM: C-NP1C2 | VOLTAGE: 208/120 | FAULT CURRENT(A): 5641

CKT	DESCRIPTION	NOTES	DEMAND CODE	VA	OC AMPS P	PHASE	OC AMPS P	VA	DEMAND CODE	NOTES	DESCRIPTION	CKT
1	RECEPT RM 1B49		RECEPTACLES	1340	20 1	A	20 1	720	RECEPTACLES		CUBICLE RM 1B81D	2
3	RECEPT RM 1B49		RECEPTACLES	720	20 1	B	20 1	720	RECEPTACLES		CUBICLE RM 1B81D	4
5	EYELANE RM 1B49		GENERAL LOAD	800	20 1	C	20 1	720	RECEPTACLES		CUBICLE RM 1B81D	6
7	RECEPT RM 1B47		RECEPTACLES	1340	20 1	A	20 1	360	RECEPTACLES		RECEPT RM 1B80	8
9	RECEPT RM 1B47		RECEPTACLES	720	20 1	B	20 1	540	RECEPTACLES		RECEPT RM 1B80	10
11	EYELANE RM 1B47		GENERAL LOAD	800	20 1	C	20 1	720	RECEPTACLES		RECEPT RM 1B79	12
13	RECEPT RM 1B47, 49		RECEPTACLES	360	20 1	A	20 1	540	RECEPTACLES		RECEPT RM 1B79, 80	14
15	RECEPT RM 1B45		RECEPTACLES	720	20 1	B	20 1	900	RECEPTACLES		RECEPT RM 1B78A, B, C	16
17	RECEPT RM 1B43		RECEPTACLES	1340	20 1	C	20 1	540	RECEPTACLES		RECEPT RM 1B78A, C	18
19	RECEPT RM 1B43		RECEPTACLES	720	20 1	A	20 1	1160	RECEPTACLES		RECEPT RM 1C19	20
21	EYELANE RM 1B43		GENERAL LOAD	800	20 1	B	20 1	540	RECEPTACLES		RECEPT RM 1C19	22
23	RECEPT RM 1B41		RECEPTACLES	1340	20 1	C	20 1	1160	RECEPTACLES		RECEPT RM 1C17	24
25	RECEPT RM 1B41		RECEPTACLES	720	20 1	A	20 1	540	RECEPTACLES		RECEPT RM 1C17	26
27	EYELANE RM 1B41		GENERAL LOAD	800	20 1	B	20 1	540	RECEPTACLES		RECEPT RM 1C15	28
29	RECEPT RM 1B39, 41, 43		RECEPTACLES	540	20 1	C	20 1	1160	RECEPTACLES		RECEPT RM 1C15	30
31	RECEPT RM 1B39		RECEPTACLES	540	20 1	A	20 1	360	RECEPTACLES		RECEPT RM 1C15, 17, 19	32
33	RECEPT RM 1B39		RECEPTACLES	720	20 1	B	20 1	1340	RECEPTACLES		RECEPT RM 1C13	34
35	RECEPT RM 1B39		RECEPTACLES	800	20 1	C	20 1	800	RECEPTACLES		RECEPT RM 1C13	36
37	RECEPT RM 1B39		RECEPTACLES	800	20 1	A	20 1	800	RECEPTACLES		RECEPT RM 1C13	38
39	RECEPT RM 1B39		RECEPTACLES	800	20 1	B	20 1	1340	RECEPTACLES		RECEPT RM 1C11	40
41	RECEPT RM 1B48		RECEPTACLES	1340	20 1	C	20 1	540	RECEPTACLES		RECEPT RM 1B51	42
43	RECEPT RM 1B48		RECEPTACLES	720	20 1	A	20 1	540	RECEPTACLES		RECEPT RM 1B51	44
45	EYELANE RM 1B48		GENERAL LOAD	800	20 1	B	20 1	360	RECEPTACLES		EYELANE RM 1B99G	46
47	RECEPT RM 1B46		RECEPTACLES	1340	20 1	C	20 1	360	RECEPTACLES		RECEPT RM 1C13, 15	48
49	RECEPT RM 1B46		RECEPTACLES	720	20 1	A	20 1	720	RECEPTACLES		RECEPT RM 1B37, 38	50
51	EYELANE RM 1B46		GENERAL LOAD	800	20 1	B	20 1	720	RECEPTACLES		RECEPT RM 1B37, 38	52
53	RECEPT RM 1B44		RECEPTACLES	1340	20 1	C	20 1	540	RECEPTACLES		RECEPT RM 1B37, 38	54
55	RECEPT RM 1B44		RECEPTACLES	720	20 1	A	20 1	360	RECEPTACLES		RECEPT RM 1B37	56
57	EYELANE RM 1B44		GENERAL LOAD	800	20 1	B	20 1	720	RECEPTACLES		RECEPT RM 1B99G	58
59	RECEPT RM 1B44, 46, 48		RECEPTACLES	540	20 1	C	20 1	900	RECEPTACLES		RECEPT RM 1B99L	60
61	RECEPT RM 1B42		RECEPTACLES	1340	20 1	A	20 1	720	RECEPTACLES		RECEPT RM 1C05	62
63	RECEPT RM 1B42		RECEPTACLES	720	20 1	B	20 1	1260	RECEPTACLES		RECEPT RM 1B36	64
65	EYELANE RM 1B42		GENERAL LOAD	800	20 1	C	20 1	900	RECEPTACLES		RECEPT RM 1B51, 52	66
67	RECEPT RM 1B40		RECEPTACLES	1340	20 1	A	20 1	540	RECEPTACLES		RECEPT RM 1B52	68
69	RECEPT RM 1B40		RECEPTACLES	720	20 1	B	20 1	540	RECEPTACLES		RECEPT RM 1B52	70
71	EYELANE RM 1B40		GENERAL LOAD	800	20 1	C	20 1	540	RECEPTACLES		RECEPT RM 1B52	72
73	RECEPT RM 1B40, 42		RECEPTACLES	360	20 1	A	20 1	360	RECEPTACLES		RECEPT RM 1B52	74
75	RECEPT RM 1B51		RECEPTACLES	360	20 1	B	20 1	360	RECEPTACLES		RECEPT RM 1C09	76
77	RECEPT RM 1B51		RECEPTACLES	1500	20 1	C	30 1	2000	RECEPTACLES		COMM RM 1C09	78
79	RECEPT RM 1B02		RECEPTACLES	1000	20 1	A	20 1	1000	RECEPTACLES		RECEPT RM 1B02	80
81	SPARE		SPARE	0	20 1	B	20 1	0	SPARE		SPARE	82
83	SPARE		SPARE	0	20 1	C	20 1	0	SPARE		SPARE	84

ALL CONNECTED	KVA	3P AVE AMPS	* PHASE TOTALS	VA	AMPS	BUS TOTALS	KVA
TOTAL CONNECTED	64.26	178.4	* A-N	20740.0	172.7	CONNECTED	64.26
TOTAL DEMAND	40.73	113.1	* B-N	19360.0	161.2	DEMAND	40.73
TOTAL DESIGN	40.73	113.1	* C-N	24160.0	201.2	DESIGN	40.73

PANEL: C-NL1D1 | OC DEVICE TYPE: Breaker | ENCLOSURE: NEMA 1 | MAINS(A): MLO | CONTINUOUS(A): 125
LOCATION: RM 1D32 | DEVICE FAMILY: Bolt On | MOUNTING: Surface | WIRING: 3-Phase 4-Wire | BUS SC RATING(A) 10000
FED FROM: C-NP1D1 | VOLTAGE: 208/120 | FAULT CURRENT(A): 5851

CKT	DESCRIPTION	NOTES	DEMAND CODE	VA	OC AMPS P	PHASE	OC AMPS P	VA	DEMAND CODE	NOTES	DESCRIPTION	CKT
1	OFFICE RM. 1D97		RECEPTACLES	720	20 1	A	20 1	720	RECEPTACLES		OFFICE RM. 1D96	2
3	OFFICE RM. 1D95		RECEPTACLES	720	20 1	B	20 1	720	RECEPTACLES		OFFICE RM. 1D94	4
5	RM. 1D25, 96, 97		RECEPTACLES	720	20 1	C	20 1	540	RECEPTACLES		OFFICE RM. 1D95, 96	6
7	OFFICE RM. 1D93		RECEPTACLES	720	20 1	A	20 1	1080	RECEPTACLES		UTIL RM. 1D12, 14	8
9	STOR RM. 1D10, 12		RECEPTACLES	900	20 1	B	20 1	360	RECEPTACLES		CORR RM. 1D99C, F	10
11	WAIT RM. 1D08		RECEPTACLES	900	20 1	C	20 1	720	RECEPTACLES		EVAL RM. 1D06	12
13	EVAL RM. 1D06		RECEPTACLES	900	20 1	A	20 1	720	RECEPTACLES		EVAL RM. 1D06	14
15	EVAL RM. 1D06		RECEPTACLES	720	20 1	B	20 1	720	RECEPTACLES		EVAL RM. 1D06	16
17	EVAL RM. 1D06		RECEPTACLES	720	20 1	C	20 1	720	RECEPTACLES		TREAT RM. 1D25	18
19	TREAT RM. 1D25		RECEPTACLES	720	20 1	A	20 1	1000	RECEPTACLES		TREAT RM. 1D25	20
21	TREAT RM. 1D25		RECEPTACLES	1000	20 1	B	20 1	1500	RECEPTACLES		STRILE RM. 1D31	22
23	STRILE RM. 1D31		RECEPTACLES	540	20 1	C	20 1	1560	RECEPTACLES		PRK/LASIK RM. 1D29	24
25	PRK/LASIK RM. 1D27		RECEPTACLES	360	20 1	A	20 1	540	RECEPTACLES		PRK/LASIK RM. 1D29	26
27	PRK/LASIK RM. 1D27		RECEPTACLES	1560	20 1	B	20 1	540	RECEPTACLES		PRK/LASIK RM. 1D27	28
29	PRK/LASIK RM. 1D27		RECEPTACLES	360	20 1	C	20 1	720	RECEPTACLES		STOR RM. 1D05	30
31	EYELANE RM. 1D07		RECEPTACLES	720	20 1	A	20 1	1520	RECEPTACLES		EYELANE RM. 1D07	32
33	EYELANE RM. 1D07		GENERAL LOAD	800	20 1	B	20 1	720	RECEPTACLES		EYELANE RM. 1D09	34
35	EYELANE RM. 1D09		GENERAL LOAD	800	20 1	C	20 1	1520	RECEPTACLES		EYELANE RM. 1D09	36
37	EYELANE RM. 1D07, 09		RECEPTACLES	360	20 1	A	20 1	540	RECEPTACLES		OFFICE RM. 1D09	38
39	SPARE		SPARE	0	20 1	B	20 1	0	SPARE		SPARE	40
41	SPARE		SPARE	0	20 1	C	20 1	0	SPARE		SPARE	42
43	SPARE		SPARE	0	20 1	A	20 1	0	SPARE		SPARE	44
45	SPARE		SPARE	0	20 1	B	20 1	0	SPARE		SPARE	46
47	SPARE		SPARE	0	20 1	C	20 1	0	SPARE		SPARE	48
49	SPARE		SPARE	0	20 1	A	20 1	0	SPARE		SPARE	50
51	SPARE		SPARE	0	20 1	B	20 1	0	SPARE		SPARE	52
53	SPARE		SPARE	0	20 1	C	20 1	0	SPARE		SPARE	54
55	SPARE		SPARE	0	20 1	A	0 1	0	SPACE		SPACE	56
57	SPARE		SPARE	0	20 1	B	20 1	0	SPARE		SPARE	58
59	SPARE		SPARE	0	20 1	C	20 1	0	SPARE		SPARE	60

ALL CONNECTED	KVA	3P AVE AMPS	* PHASE TOTALS	VA	AMPS	BUS TOTALS	KVA
TOTAL CONNECTED	30.70	85.2	* A-N	10620.0	88.4	CONNECTED	30.70
TOTAL DEMAND	21.15	58.7	* B-N	10260.0	85.4	DEMAND	21.15
TOTAL DESIGN	21.15	58.7	* C-N	9820.0	81.8	DESIGN	21.15

PANEL: C-NL1D2 | OC DEVICE TYPE: Breaker | ENCLOSURE: NEMA 1 | MAINS(A): MLO | CONTINUOUS(A): 125
LOCATION: RM 1D32 | DEVICE FAMILY: Bolt On | MOUNTING: Surface | WIRING: 3-Phase 4-Wire | BUS SC RATING(A) 10000
FED FROM: C-NP1D1 | VOLTAGE: 208/120 | FAULT CURRENT(A): 5851

CKT	DESCRIPTION	NOTES	DEMAND CODE	VA	OC AMPS P	PHASE	OC AMPS P	VA	DEMAND CODE	NOTES	DESCRIPTION	CKT
1	COMM RM. 1C66		RECEPTACLES	360	20 1	A	20 1	360	RECEPTACLES		COMM RM. 1C66	2
3	COMM RM. 1C66		RECEPTACLES	1500	20 1	B	30 1	2000	RECEPTACLES		COMM RM. 1C66	4
5	WAIT RM. 1C68		RECEPTACLES	900	20 1	C	20 1	540	RECEPTACLES		RM. 1C70, 72	6
7	EYELANE RM. 1D11		RECEPTACLES	1520	20 1	A	20 1	720	RECEPTACLES		EYELANE RM. 1D11	8
9	EYELANE RM. 1D13		RECEPTACLES	1520	20 1	B	20 1	800	GENERAL LOAD		EYELANE RM. 1D11	10
11	EYELANE RM. 1D15		RECEPTACLES	1520	20 1	C	20 1	720	RECEPTACLES		EYELANE RM. 1D13	12
13	OFFICE RM. 1D91		RECEPTACLES	720	20 1	A	20 1	800	GENERAL LOAD		EYELANE RM. 1D13	14
15	OFFICE RM. 1C90		RECEPTACLES	720	20 1	B	20 1	720	RECEPTACLES		EYELANE RM. 1D15	16
17	OFFICE RM. 1C89		RECEPTACLES	720	20 1	C	20 1	800	GENERAL LOAD		EYELANE RM. 1D15	18
19	OFFICE RM. 1D88		RECEPTACLES	720	20 1	A	20 1	720	RECEPTACLES		RM. 1D11, 13, 15, 91	20
21	OFFICE RM. 1D87		RECEPTACLES	540	20 1	B	20 1	900	RECEPTACLES		RM. 1C89, 88, 87	22
23	EYELANE RM. 1C65		RECEPTACLES	1340	20 1	C	20 1	720	RECEPTACLES		EYELANE RM. 1C65	24
25	EYELANE RM. 1C65		GENERAL LOAD	800	20 1	A	20 1	1340	RECEPTACLES		EYELANE RM. 1C67	26
27	EYELANE RM. 1C67		RECEPTACLES	720	20 1	B	20 1	800	GENERAL LOAD		EYELANE RM. 1C67	28
29	EYELANE RM. 1C69		RECEPTACLES	1340	20 1	C	20 1	720	RECEPTACLES		EYELANE RM. 1C69	30
31	EYELANE RM. 1C69		GENERAL LOAD	800	20 1	A	20 1	720	RECEPTACLES		RM. 1C69, 67, 65	32
33	LASER RM. 1C71		RECEPTACLES	540	20 1	B	20 1	540	RECEPTACLES		LASER RM. 1C71	34
35	LASER RM. 1C71		RECEPTACLES	800	20 1	C	20 1	800	RECEPTACLES		LASER RM. 1C71	36
37	LASER RM. 1C71		RECEPTACLES	800	20 1	A	20 1	540	RECEPTACLES		LASER RM. 1C73	38
39	LASER RM. 1C73		RECEPTACLES	540	20 1	B	20 1	720	RECEPTACLES		LASER RM. 1C73	40
41	LASER RM. 1C73		RECEPTACLES	800	20 1	C	20 1	800	RECEPTACLES		LASER RM. 1C73	42
43	OFFICE RM. 1C87, 88		RECEPTACLES	540	20 1	A	20 1	540	RECEPTACLES		OFFICE RM. 1C87	44
45	OFFICE RM. 1C89, 90		RECEPTACLES	540	20 1	B	20 1	0	SPARE		SPARE	46
47	SPARE		SPARE	0	20 1	C	20 1	0	SPARE		SPARE	48
49	SPARE		SPARE	0	20 1	A	20 1	0	SPARE		SPARE	50
51	SPARE		SPARE	0	20 1	B	20 1	0	SPARE		SPARE	52
53	SPARE		SPARE	0	20 1	C	20 1	0	SPARE		SPARE	54
55	SPACE		SPACE	0	0 1	A	0 1	0	SPACE		SPACE	56
57	SPACE		SPACE	0	0 1	B	0 1	0	SPACE		SPACE	58
59	SPACE		SPACE	0	0 1	C	0 1	0	SPACE		SPACE	60

ALL CONNECTED	KVA	3P AVE AMPS	* PHASE TOTALS	VA	AMPS	BUS TOTALS	KVA
TOTAL CONNECTED	37.62	104.4	* A-N	12000.0	99.9	CONNECTED	37.62
TOTAL DEMAND	26.21	72.8	* B-N	13100.0	109.1	DEMAND	26.21
TOTAL DESIGN	26.21	72.8	* C-N	12520.0	104.3	DESIGN	26.21

PANEL INDEX	
C-NL1C2	C-NL1C3
C-NL1D1	C-NL1D2

SYM	DESCRIPTION	DATE
	FINAL CORRECTED SET	03/26/14

NAVFAC

STATE OF MARYLAND · DAVID C. BECHTOL · No. 15806 · REGISTERED PROFESSIONAL ENGINEER · 3/26/14

HDR
ARCHITECTURE | ENGINEERING & CONSULTING
1101 KING STREET
SUITE 400
ALEXANDRIA, VIRGINIA 22314
703-518-8500

APPROVED
FOR COMMANDER NAVFAC
ACTIVITY
SATISFACTORY TO DATE

DES KM | DRW KM | CHK GM
PM/DM CHEMENJU/HILL
BRANCH MANAGER N/A
CHIEF ENG/ARCH TOM COX

DEPARTMENT OF THE NAVY
NAVAL FACILITIES ENGINEERING COMMAND
NAVAL FACILITIES ENGINEERING COMMAND ~ AGENCY
COMPONENT NAME
BASE - CITY, STATE
PROJECT STATION/INSTALLATION BETHESDA, MD
P125 - TEMPORARY MEDICAL FACILITIES
PACKAGE 2 - CLINIC BUILDING
ELECTRICAL - PANEL SCHEDULE SHEET 6

SCALE: 12" = 1'-0"
EPROJECT NO.: 1151333
CONSTR. CONTR. NO. N62470-09-D-9044
NAVFAC DRAWING NO. 13066106
SHEET OF 0
E-706

C:\rvt\191274-MEP-F2-CENTRAL_tpongsud.rvt 3/19/2014 4:12:51 PM

PANEL: C-NL2A1	OC DEVICE TYPE: Breaker	ENCLOSURE: NEMA 1	MAINS(A): MLO	CONTINUOUS(A): 125
LOCATION: RM 2A34	DEVICE FAMILY: Bolt On	MOUNTING: Surface	WIRING: 3-Phase 4-Wire	BUS SC RATING(A) 10000
FED FROM: C-NP2A1		VOLTAGE: 208/120		FAULT CURRENT(A): 5179

CKT	DESCRIPTION	NOTES	DEMAND CODE	VA	OC AMPS	P	PHASE	OC AMPS	P	VA	DEMAND CODE	NOTES	DESCRIPTION	CKT
1	COMM RM 2A22		RECEPTACLES	360	20	1	A	20	1	360	RECEPTACLES		COMM RM 2A22	2
3	OFF RM 2A20		RECEPTACLES	1180	20	1	B	20	1	1200	RECEPTACLES		OFF RM 2A18, 20, 21	4
5	OFF RM 2A18		RECEPTACLES	900	20	1	C	20	1	900	RECEPTACLES		OFF RM 2A21	6
7	OFF RM 2A14, 16		RECEPTACLES	1180	20	1	A	20	1	720	RECEPTACLES		OFF RM 2A20	8
9	OFF RM 2A16		RECEPTACLES	1080	20	1	B	20	1	1200	RECEPTACLES		OFF RM 2A06, 08	10
11	OFF RM 2A14		RECEPTACLES	1080	20	1	C	20	1	1080	RECEPTACLES		OFF RM 2A08	12
13	OFF RM 2A10, 12		RECEPTACLES	1200	20	1	A	20	1	1080	RECEPTACLES		OFF RM 2A06	14
15	OFF RM 2A12		RECEPTACLES	1080	20	1	B	20	1	1200	RECEPTACLES		OFF RM 2A02, 04	16
17	OFF RM 2A10		RECEPTACLES	1080	20	1	C	20	1	1080	RECEPTACLES		OFF RM 2A04	18
19	SPARE		SPARE	0	20	1	A	20	1	1080	RECEPTACLES		OFF RM 2A02	20
21	SPARE		SPARE	0	20	1	B	20	1	720	RECEPTACLES		CORR RM 2A99B, E	22
23	ELEC RM 2A34		RECEPTACLES	180	20	1	C	20	1	100	GENERAL LOAD		FLUSH RM 2A11	24
25	CUB RM 2A13P		RECEPTACLES	300	20	1	A	20	1	360	RECEPTACLES		CUB RM 2A13P	26
27	CUB RM 2A13E		RECEPTACLES	1200	20	1	B	20	1	1200	RECEPTACLES		CUB RM 2A13J	28
29	CUB RM 2A13E		RECEPTACLES	720	20	1	C	20	1	720	RECEPTACLES		CUB RM 2A13J	30
31	CUB RM 2A13E		RECEPTACLES	720	20	1	A	20	1	720	RECEPTACLES		CUB RM 2A13J	32
33	CUB RM 2A13H		RECEPTACLES	720	20	1	B	20	1	300	RECEPTACLES		CUB RM 2A23	34
35	CUB RM 2A13H		RECEPTACLES	720	20	1	C	20	1	900	RECEPTACLES		CUB RM 2A23	36
37	CUB RM 2A13H		RECEPTACLES	1200	20	1	A	20	1	1000	RECEPTACLES		RECEPT RM 2A22	38
39	RECEPT ROOF		RECEPTACLES	180	20	1	B	20	1	180	RECEPTACLES		RECEPT ROOF	40
41	RECEP ROOF		RECEPTACLES	180	20	1	C	30	1	1000	RECEPTACLES		COMM RM 2A22	42
43	RTU RECEP		RECEPTACLES	660	20	1	A	20	1	0	SPARE		SPARE	44
45	SPARE		SPARE	0	20	1	B	20	1	0	SPARE		SPARE	46
47	SPARE		SPARE	0	20	1	C	20	1	0	SPARE		SPARE	48
49	SPARE		SPARE	0	20	1	A	20	1	0	SPARE		SPARE	50
51	SPARE		SPARE	0	20	1	B	20	1	0	SPARE		SPARE	52
53	SPARE		SPARE	0	20	1	C	20	1	0	SPARE		SPARE	54
55	SPACE		SPACE	0	0	1	A	0	1	0	SPACE		SPACE	56
57	SPACE		SPACE	0	0	1	B	0	1	0	SPACE		SPACE	58
59	SPACE		SPACE	0	0	1	C	0	1	0	SPACE		SPACE	60

ALL CONNECTED	KVA	3P AVE AMPS	* PHASE TOTALS	VA	AMPS	BUS TOTALS	KVA
TOTAL CONNECTED	33.02	91.7	* A-N	10940.0	91.1	CONNECTED	33.02
TOTAL DEMAND	21.56	59.8	* B-N	11440.0	95.3	DEMAND	21.56
TOTAL DESIGN	21.56	59.8	* C-N	10640.0	88.6	DESIGN	21.56

PANEL: C-NL2A2	OC DEVICE TYPE: Breaker	ENCLOSURE: NEMA 1	MAINS(A): 225 MLO	CONTINUOUS(A): 225
LOCATION: RM 2A34	DEVICE FAMILY: Bolt On	MOUNTING: Surface	WIRING: 3-Phase 4-Wire	BUS SC RATING(A) 10000
FED FROM: C-NP2A1		VOLTAGE: 208/120		FAULT CURRENT(A): 5179

CKT	DESCRIPTION	NOTES	DEMAND CODE	VA	OC AMPS	P	PHASE	OC AMPS	P	VA	DEMAND CODE	NOTES	DESCRIPTION	CKT
1	RECEPT RM 2A47, 48, 45		RECEPTACLES	1200	20	1	A	20	1	900	RECEPTACLES		RECEPT RM 2A48	2
3	RECEPT RM 2A47		RECEPTACLES	900	20	1	B	20	1	360	RECEPTACLES		RECEPT RM 2A50	4
5	RECEPT RM 2A67		RECEPTACLES	720	20	1	C	20	1	900	RECEPTACLES		RECEPT RM 2A99F, G, N	6
7	RECEPT RM 2A42		RECEPTACLES	720	20	1	A	20	1	900	RECEPTACLES		RECEPT RM 2A49	8
9	RECEPT RM 2A45, 46		GENERAL LOAD	40	20	1	B	20	1	900	RECEPTACLES		RECEPT RM 2A60, 62, 68	10
11	RECEPT RM 2A65, 67		RECEPTACLES	600	20	1	C	20	1	1080	RECEPTACLES		RECEPT RM 2A62	12
13	RECEPT RM 2A53		RECEPTACLES	540	20	1	A	20	1	960	RECEPTACLES		RECEPT RM 2A51, 52, 53	14
15	RECEPT RM 2A51		RECEPTACLES	720	20	1	B	20	1	1080	RECEPTACLES		RECEPT RM 2A52	16
17	RECEPT RM 2A54		RECEPTACLES	1200	20	1	C	20	1	1080	RECEPTACLES		RECEPT RM 2A37	18
19	RECEPT RM 2A35, 37		RECEPTACLES	1200	20	1	A	20	1	720	RECEPTACLES		RECEPT RM 2A43	20
21	RECEPT RM 2A54		RECEPTACLES	540	20	1	B	20	1	1080	RECEPTACLES		RECEPT RM 2A35	22
23	RECEPT RM 2A43, 58		RECEPTACLES	600	20	1	C	20	1	1080	RECEPTACLES		RECEPT RM 2A68.	24
25	RECEPT RM 2A42A, 44		RECEPTACLES	1080	20	1	A	20	1	1080	RECEPTACLES		RECEPT RM 2A58	26
27	RECEPT RM 2A60		RECEPTACLES	1080	20	1	B	20	1	1080	RECEPTACLES		RECEPT RM 2A33	28
29	RECEPT RM 2A31		RECEPTACLES	1260	20	1	C	20	1	600	RECEPTACLES		RECEPT RM 2A00	30
31	RECEPT RM 2A05C		RECEPTACLES	1200	20	1	A	20	1	720	RECEPTACLES		RECEPT RM 2A05D	32
33	RECEPT RM 2A05C		RECEPTACLES	720	20	1	B	20	1	1200	RECEPTACLES		RECEPT RM 2A05B, D	34
35	RECEPT RM 2A05C		RECEPTACLES	720	20	1	C	20	1	720	RECEPTACLES		RECEPT RM 2A05B	36
37	RECEPT RM 2A00, 01		RECEPTACLES	540	20	1	A	20	1	720	RECEPTACLES		RECEPT RM 2A03	38
39	RECEPT RM 2A03		RECEPTACLES	720	20	1	B	20	1	1440	RECEPTACLES		RECEPT RM 2A00	40
41	EWC RM 2A99N		RECEPTACLES	800	20	1	C	20	1	1200	RECEPTACLES		RECEPT RM 2A03	42
43	RECEPT RM 2A03		RECEPTACLES	360	20	1	A	20	1	900	RECEPTACLES		RECEPT RM 2465	44
45	RECEPT RM 2A31, 33		RECEPTACLES	1200	20	1	B	20	1	720	RECEPTACLES		RECEPT RM 2A65	46
47	RECEPT RM 2A49		RECEPTACLES	1450	20	1	C	20	1	900	RECEPTACLES		RECEPT RM 2A46	48
49	RECEPT RM 2A49		RECEPTACLES	1450	20	1	A	20	1	0	SPARE		SPARE	50
51	RECEPT RM 2A49		RECEPTACLES	1670	20	1	B	20	1	0	SPARE		SPARE	52
53	SPARE		SPARE	0	20	1	C	20	1	0	SPARE		SPARE	54
55	SPARE		SPARE	0	20	1	A	20	1	0	SPARE		SPARE	56
57	SPARE		SPARE	0	20	1	B	20	1	0	SPARE		SPARE	58
59	SPARE		SPARE	0	20	1	C	20	1	0	SPARE		SPARE	60

ALL CONNECTED	KVA	3P AVE AMPS	* PHASE TOTALS	VA	AMPS	BUS TOTALS	KVA
TOTAL CONNECTED	45.55	126.4	* A-N	15190.0	126.5	CONNECTED	45.55
TOTAL DEMAND	27.80	77.2	* B-N	15450.0	128.7	DEMAND	27.80
TOTAL DESIGN	27.80	77.2	* C-N	14910.0	124.2	DESIGN	27.80

PANEL: C-NL2B2	OC DEVICE TYPE: Breaker	ENCLOSURE: NEMA 1	MAINS(A): 225 MLO	CONTINUOUS(A): 225
LOCATION: RM 2B84	DEVICE FAMILY: Bolt On	MOUNTING: Surface	WIRING: 3-Phase 4-Wire	BUS SC RATING(A) 10000
FED FROM: C-NP2B2		VOLTAGE: 208/120		FAULT CURRENT(A): 4746

CKT	DESCRIPTION	NOTES	DEMAND CODE	VA	OC AMPS	P	PHASE	OC AMPS	P	VA	DEMAND CODE	NOTES	DESCRIPTION	CKT
1	RECEPT RM 2B12B, C		RECEPTACLES	540	20	1	A	20	1	1200	RECEPTACLES		OFF RM 2B08, 10, 13	2
3	RECEPT RM 2B12D		RECEPTACLES	360	20	1	B	20	1	540	RECEPTACLES		OFF RM 2B10	4
5	RECEPT RM 2B12D		RECEPTACLES	1200	20	1	C	20	1	1200	RECEPTACLES		CUB RM 2B12B	6
7	RECEPT RM 2B86		RECEPTACLES	1000	20	1	A	20	1	900	RECEPTACLES		OFF RM 2B08	8
9	COMM RM 2B86		RECEPTACLES	1000	30	1	B	20	1	1080	RECEPTACLES		OFF RM 2B06	10
11	SPARE		SPARE	0	20	1	C	20	1	900	RECEPTACLES		OFF RM 2B04, 06	12
13	RECEPT RM 2B86		RECEPTACLES	360	20	1	A	20	1	360	RECEPTACLES		COMM RM 2B86	14
15	RECEPT RM 2B04		RECEPTACLES	900	20	1	B	20	1	180	RECEPTACLES		OFF RM 2B84	16
17	RECEPT RM 2B00, 02		RECEPTACLES	1740	20	1	C	20	1	180	RECEPTACLES		OFF RM 2B84	18
19	RECEPT RM 2B99A, B		RECEPTACLES	1260	20	1	A	20	1	900	RECEPTACLES		OFF RM 2B03	20
21	RECEPT RM 2B00, 01, 03		RECEPTACLES	1200	20	1	B	20	1	980	RECEPTACLES		OFF RM 2B15, 16	22
23	RECEPT RM 2B01		RECEPTACLES	900	20	1	C	20	1	540	RECEPTACLES		OFF RM 2B15	24
25	RECEPT RM 2B16		RECEPTACLES	1264	20	1	A	20	1	540	RECEPTACLES		OFF RM 2B15	26
27	RECEPT RM 2B14, 16		RECEPTACLES	720	20	1	B	20	1	760	RECEPTACLES		OFF RM 2B13	28
29	RECEPT RM 2B14		RECEPTACLES	540	20	1	C	20	1	540	RECEPTACLES		OFF RM 2B13	30
31	RECEPT RM 2B14		RECEPTACLES	180	20	1	A	20	1	1450	RECEPTACLES		STAFF RM 2B06	32
33	RECEPT RM 2B00		RECEPTACLES	1200	20	1	B	20	1	720	RECEPTACLES		WAIT RM 2C01, 02	34
35	RECEPT RM 2B14		RECEPTACLES	1670	20	1	C	20	1	0	SPARE		SPARE	36
37	STOR RM 2C03A		RECEPTACLES	920	20	1	A	20	1	1200	RECEPTACLES		RECEPT RM 2C03	38
39	RECEPT RM 2C03		RECEPTACLES	900	20	1	B	20	1	720	RECEPTACLES		RECEPT RM 2C03	40
41	RECEPT RM 2C03		RECEPTACLES	540	20	1	C	20	1	1100	RECEPTACLES		TESTING RM 2C03, 05A	42
43	WAIT RM 2C05		RECEPTACLES	1080	20	1	A	20	1	720	RECEPTACLES		TESTING RM 2C03	44
45	CONF RM 2C25		RECEPTACLES	900	20	1	B	20	1	720	RECEPTACLES		OFF RM 2C26	46
47	CONF RM 2C25		RECEPTACLES	1264	20	1	C	20	1	900	RECEPTACLES		OFF RM 2C27A	48
49	CONF RM 2C25		RECEPTACLES	1450	20	1	A	20	1	900	RECEPTACLES		OFF RM 2C03	50
51	CONF RM 2C25		RECEPTACLES	1670	20	1	B	20	1	540	RECEPTACLES		OFF RM 2C23	52
53	CONF RM 2C25		RECEPTACLES	1400	20	1	C	20	1	1180	RECEPTACLES		RECEPT RM 2C23	54
55	OFF RM 2C23, 24		RECEPTACLES	900	20	1	A	20	1	0	SPARE		SPARE	56
57	OFF RM 2C24		RECEPTACLES	900	20	1	B	20	1	0	SPARE		SPARE	58
59	SPARE		SPARE	0	20	1	C	20	1	0	SPARE		SPARE	60
61	SPARE		SPARE	0	20	1	A	20	1	0	SPARE		SPARE	62
63	SPARE		SPARE	0	20	1	B	20	1	0	SPARE		SPARE	64
65	SPARE		SPARE	0	20	1	C	20	1	0	SPARE		SPARE	66
67	SPARE		SPARE	0	20	1	A	20	1	0	SPARE		SPARE	68
69	SPARE		SPARE	0	20	1	B	20	1	0	SPARE		SPARE	70
71	SPARE		SPARE	0	20	1	C	20	1	0	SPARE		SPARE	72
73	SPARE		SPARE	0	20	1	A	20	1	0	SPARE		SPARE	74
75	SPARE		SPARE	0	20	1	B	20	1	0	SPARE		SPARE	76
77	SPARE		SPARE	0	20	1	C	20	1	0	SPARE		SPARE	78
79	SPACE		SPACE	0	0	1	A	0	1	0	SPACE		SPACE	80
81	SPACE		SPACE	0	0	1	B	0	1	0	SPACE		SPACE	82
83	SPACE		SPACE	0	0	1	C	0	1	0	SPACE		SPACE	84

ALL CONNECTED	KVA	3P AVE AMPS	* PHASE TOTALS	VA	AMPS	BUS TOTALS	KVA
TOTAL CONNECTED	48.91	135.8	* A-N	17124.0	142.6	CONNECTED	48.91
TOTAL DEMAND	29.45	81.8	* B-N	15990.0	133.2	DEMAND	29.45
TOTAL DESIGN	29.45	81.8	* C-N	15794.0	131.5	DESIGN	29.45

PANEL: C-NL2C1	OC DEVICE TYPE: Breaker	ENCLOSURE: NEMA 1	MAINS(A): 225 MLO	CONTINUOUS(A): 225
LOCATION: RM 2C38	DEVICE FAMILY: Bolt On	MOUNTING: Surface	WIRING: 3-Phase 4-Wire	BUS SC RATING(A) 10000
FED FROM: C-NP2C1		VOLTAGE: 208/120		FAULT CURRENT(A): 3310

CKT	DESCRIPTION	NOTES	DEMAND CODE	VA	OC AMPS	P	PHASE	OC AMPS	P	VA	DEMAND CODE	NOTES	DESCRIPTION	CKT
1	OFF RM 2C31		RECEPTACLES	900	20	1	A	20	1	1000	RECEPTACLES		OFF RM 2C33	2
3	OFF RM 2C29, 31, 32		RECEPTACLES	900	20	1	B	20	1	900	RECEPTACLES		OFF RM 2C33	4
5	OFF RM 2C30		RECEPTACLES	900	20	1	C	20	1	940	RECEPTACLES		OFF RM 2C33, 34	6
7	COPY RM 2C32		RECEPTACLES	1200	20	1	A	20	1	1000	RECEPTACLES		OFF RM 2C34	8
9	COPY RM 2C32		RECEPTACLES	1200	20	1	B	20	1	900	RECEPTACLES		OFF RM 2C34	10
11	COPY RM 2C28, 32		RECEPTACLES	720	20	1	C	20	1	720	RECEPTACLES		CUB RM 2C35A, B	12
13	OFF RM 2C29		RECEPTACLES	900	20	1	A	20	1	600	RECEPTACLES		OFF RM 2C35A, B	14
15	OFF RM 2C22		RECEPTACLES	900	20	1	B	20	1	500	RECEPTACLES		CUB RM 2C35C	16
17	OFF RM 2C21, 22		RECEPTACLES	900	20	1	C	20	1	500	RECEPTACLES		CUB RM 2C35C	18
19	OFF RM 2C21		RECEPTACLES	1000	20	1	A	20	1	1000	RECEPTACLES		OFF RM 2C20	20
21	OFF RM 2C21		RECEPTACLES	900	20	1	B	20	1	1200	RECEPTACLES		OFF RM 2C19, 20	22
23	OFF RM 2C20		RECEPTACLES	540	20	1	C	20	1	900	RECEPTACLES		OFF RM 2C19	24
25	CUB RM 2C35J		RECEPTACLES	720	20	1	A	20	1	1000	RECEPTACLES		OFF RM 2C19	26
27	CUB RM 2C35J		RECEPTACLES	720	20	1	B	20	1	900	RECEPTACLES		OFF RM 2C18	28
29	CUB RM 2C35J		RECEPTACLES	1200	20	1	C	20	1	1000	RECEPTACLES		OFF RM 2C18	30
31	OFF RM 2C08		RECEPTACLES	1000	20	1	A	20	1	720	RECEPTACLES		OFF RM 2C17, 18	32
33	OFF RM 2C08		RECEPTACLES	900	20	1	B	20	1	900	RECEPTACLES		OFF RM 2C17	34
35	OFF RM 2C08, 10		RECEPTACLES	1200	20	1	C	20	1	1000	RECEPTACLES		OFF RM 2C17	36
37	OFF RM 2C35G, H		RECEPTACLES	720	20	1	A	20	1	1080	RECEPTACLES		CUB RM 2C35K	38
39	OFF RM 2C10		RECEPTACLES	1000	20	1	B	20	1	1080	RECEPTACLES		CUB RM 2C35K	40
41	OFF RM 2C10		RECEPTACLES	900	20	1	C	20	1	900	RECEPTACLES		CUB RM 2C35K	42
43	OFF RM 2C35M, R		RECEPTACLES	1200	20	1	A	20	1	900	RECEPTACLES		CUB RM 2C35K	44
45	OFF RM 2C35M, R		RECEPTACLES	720	20	1	B	20	1	1080	RECEPTACLES		CORR RM 2C99C	46
47	OFF RM 2C11		RECEPTACLES	900	20	1	C	20	1	540	RECEPTACLES		OFF RM 2C14, 15, 16	48
49	OFF RM 2C11, 12, 13		RECEPTACLES	540	20	1	A	20	1	900	RECEPTACLES		OFF RM 2C14	50
51	OFF RM 2C12		RECEPTACLES	900	20	1	B	20	1	900	RECEPTACLES		OFF RM 2C15	52
53	OFF RM 2C13		RECEPTACLES	900	20	1	C	20	1	900	RECEPTACLES		RECEPT RM 2C16	54
55	RECEPT ROOF		RECEPTACLES	360	20	1	A	20	1	360	RECEPTACLES		RECEPT ROOF	56
57	RECEPT ROOF		RECEPTACLES	180	20	1	B	20	1	0	SPARE		SPARE	58
59	RECEPT ROOF		RECEPTACLES	360	20	1	C	20	1	860	RECEPTACLES		RECEPT ROOF	60
61	RECEPT ROOF		RECEPTACLES	360	20	1	A	20	1	800	RECEPTACLES		RECEPT RM 2B99A	62
63	SPARE		SPARE	0	20	1	B	20	1	180	RECEPTACLES		RECEPT ROOF	64
65	SPARE		SPARE	0	20	1	C	20	1	0	SPARE		SPARE	66
67	SPARE		SPARE	0	20	1	A	20	1	0	SPARE		SPARE	68
69	SPARE		SPARE	0	20	1	B	20	1	0	SPARE		SPARE	70
71	SPARE		SPARE	0	20	1	C	20	1	0	SPARE		SPARE	72
73	SPARE		SPARE	0	20	1	A	20	1	0	SPARE		SPARE	74
75	SPARE		SPARE	0	20	1	B	20	1	0	SPARE		SPARE	76
77	SPARE		SPARE	0	20	1	C	20	1	0	SPARE		SPARE	78
79	SPACE		SPACE	0	0	1	A	0	1	0	SPACE		SPACE	80
81	SPACE		SPACE	0	0	1	B	0	1	0	SPACE		SPACE	82
83	SPACE		SPACE	0	0	1	C	0	1	0	SPACE		SPACE	84

ALL CONNECTED	KVA	3P AVE AMPS	* PHASE TOTALS	VA	AMPS	BUS TOTALS	KVA
TOTAL CONNECTED	51.90	144.1	* A-N	18260.0	152.1	CONNECTED	51.90
TOTAL DEMAND	30.95	85.9	* B-N	16860.0	140.4	DEMAND	30.95
TOTAL DESIGN	30.95	85.9	* C-N	16780.0	139.7	DESIGN	30.95

PANEL INDEX	
C-NL2A1	C-NL2A2
C-NL2B2	C-NL2C1

SYM	DESCRIPTION	DATE
	FINAL CORRECTED SET	03/26/14

NAVFAC

STATE OF MARYLAND · DAVID C. BECHTOL · No. 15006 · REGISTERED PROFESSIONAL ENGINEER · 3/26/14

HDR
ARCHITECTURE | ENGINEERING & CONSULTING
1101 KING STREET
SUITE 400
ALEXANDRIA, VIRGINIA 22314
703-518-8500

APPROVED

FOR COMMANDER NAVFAC

ACTIVITY

SATISFACTORY TO DATE

DES KM | DRW KM | CHK GM
PM/DM CHEMENJU/HILL
BRANCH MANAGER N/A
CHIEF ENG/ARCH TOM COX

DEPARTMENT OF THE NAVY
NAVAL FACILITIES ENGINEERING COMMAND
NAVAL FACILITIES ENGINEERING COMMAND ~ AGENCY
COMPONENT NAME
BASE - CITY, STATE
BETHESDA, MD
PROJECT STATION/INSTALLATION
P125 - TEMPORARY MEDICAL FACILITIES
PACKAGE 2 - CLINIC BUILDING
ELECTRICAL - PANEL SCHEDULE SHEET 7

SCALE: 12" = 1'-0"
EPROJECT NO.: 1151333
CONSTR. CONTR. NO. N62470-09-D-9044
NAVFAC DRAWING NO. 13066107
SHEET OF 0
E-707

C:\rvt\191274-MEP-F2-CENTRAL_tpongsud.rvt 3/19/2014 4:12:53 PM

PANEL: C-NP1A1 | OC DEVICE TYPE: Breaker | ENCLOSURE: NEMA 1 | MAINS(A): 250A MCB | CONTINUOUS(A): 250
LOCATION: RM 1A46 | DEVICE FAMILY: Bolt On | MOUNTING: Surface | WIRING: 3-Phase 4-Wire | BUS SC RATING(A) 10000
FED FROM: XF C-NP1A1_BUS-S | VOLTAGE: 208/120 | FAULT CURRENT(A): 5497

CKT	DESCRIPTION	NOTES	DEMAND CODE	VA	OC AMPS P	PHASE	OC AMPS P	VA	DEMAND CODE	NOTES	DESCRIPTION	CKT
1	FCU RM 1A99L		MOTOR 2	1800	20 2	A	20 1	125	GENERAL LOAD		PP-1 RM 1A58	2
3	"			-	"	B	20 2	1800	MOTOR 2		FCU RM 1A45	4
5	CORR RM 1A99M, N, P		RECEPTACLES	900	20 1	C	"	-			"	6
7	STOR RM 1A50B		RECEPTACLES	180	20 1	A	20 1	560	RECEPTACLES		TLT RM 1A47, 48	8
9	STOR RM 1A50B		RECEPTACLES	180	20 1	B	20 1	1800	RECEPTACLES		STOR RM 1A45	10
11	STOR RM 1A50B		RECEPTACLES	180	20 1	C	20 1	1500	RECEPTACLES		STOR RM 1A45	12
13	STOR RM 1A50B		RECEPTACLES	360	20 1	A	20 1	1500	RECEPTACLES		STOR RM 1A45	14
15	STOR RM 1A50B		RECEPTACLES	180	20 1	B	20 1	1500	RECEPTACLES		STOR RM 1A45	16
17	STOR RM 1A50B		RECEPTACLES	180	20 1	C	20 1	360	RECEPTACLES		STOR RM 1A45	18
19	STOR RM 1A50B		RECEPTACLES	180	20 1	A	20 1	900	RECEPTACLES		CHAPEL RM 1A00	20
21	STOR RM 1A50A		RECEPTACLES	720	20 1	B	20 1	900	RECEPTACLES		CHAPEL RM 1A00	22
23	STOR RM 1A50		RECEPTACLES	720	20 1	C	20 1	180	RECEPTACLES		CHAPEL RM 1A00	24
25	STOR RM 1A50		RECEPTACLES	720	20 1	A	20 1	180	RECEPTACLES		CHAPEL RM 1A00A	26
27	PLUMB RM 1B33		GENERAL LOAD	300	20 1	B	20 1	500	RECEPTACLES		CORR RM 1B99K	28
29	FCU RM 1A99K		MOTOR 2	2450	20 2	C	20 2	1850	MOTOR 2		FCU RM 1A20	30
31	"			-	"	A	"	-			"	32
33	SPARE		SPARE	0	20 1	B	20 2	2450	MOTOR 2		FCU RM 1A99E	34
35	SPARE		SPARE	0	20 1	C	"	-			"	36
37	SPARE		SPARE	0	20 1	A	30 3	0	GEN		SPD	38
39	SPARE		SPARE	0	20 1	B	"	-			"	40
41	SPARE		SPARE	0	20 1	C	"	-			"	42
43	SPARE		SPARE	0	20 1	A	20 1	0	SPARE		SPARE	44
45	SPARE		SPARE	0	20 1	B	20 1	0	SPARE		SPARE	46
47	SPARE		SPARE	0	20 1	C	20 1	0	SPARE		SPARE	48
49	SPARE		SPARE	0	20 1	A	0 1	0	SPACE		SPACE	50
51	SPARE		SPARE	0	20 1	B	20 1	0	SPARE		SPARE	52
53	SPARE		SPARE	0	20 1	C	20 1	0	SPARE		SPARE	54
55	C-NL1A2_CBL		NONE	26640	125 3	A	125 3	29860	NONE		C-NL1A1_CBL	56
57	"			-	"	B	"	-			"	58
59	"			-	"	C	"	-			"	60

ALL CONNECTED	KVA	3P AVE AMPS	* PHASE TOTALS	VA	AMPS	BUS TOTALS	KVA
TOTAL CONNECTED	81.66	226.7	* A-N	26588.3	221.4	CONNECTED	81.66
TOTAL DEMAND	51.47	142.9	* B-N	27938.3	232.6	DEMAND	51.47
TOTAL DESIGN	51.47	142.9	* C-N	27128.3	225.9	DESIGN	51.47

PANEL: C-NP1B1 | OC DEVICE TYPE: Breaker | ENCLOSURE: NEMA 1 | MAINS(A): 250A MCB | CONTINUOUS(A): 400
LOCATION: RM 1B21 | DEVICE FAMILY: Bolt On | MOUNTING: Surface | WIRING: 3-Phase 4-Wire | BUS SC RATING(A) 10000
FED FROM: XF C-NP1B1 | VOLTAGE: 208/120 | FAULT CURRENT(A): 5030

CKT	DESCRIPTION	NOTES	DEMAND CODE	VA	OC AMPS P	PHASE	OC AMPS P	VA	DEMAND CODE	NOTES	DESCRIPTION	CKT
1	FCU RM 1B99A		MOTOR 2	2648	20 2	A	20 2	2000	GENERAL LOAD		ELEV RM 1B07	2
3	"			-	"	B	"	-			"	4
5	FCU RM 1B29		MOTOR 2	2714	20 2	C	20 2	2000	GENERAL LOAD		ELEV RM 1B07	6
7	"			-	"	A	"	-			"	8
9	FCU RM 1B99A		MOTOR 2	2048	20 2	B	20 1	0	SPARE		SPARE	10
11	"			-	"	C	20 1	180	RECEPTACLES		ELEV RM 1B07	12
13	FCU RM 1B99A		MOTOR 2	2000	20 2	A	20 1	500	RECEPTACLES		ELEV RM 1B07	14
15	"			-	"	B	20 1	500	RECEPTACLES		ELEV RM 1B07	16
17	ELEC RM 1B31		RECEPTACLES	1340	20 1	C	20 1	720	RECEPTACLES		CORR RM 1B99A, D, F	18
19	EYELANE RM 1B31		RECEPTACLES	1340	20 1	A	20 1	900	RECEPTACLES		OFF RM 1B19, 20	20
21	EYELANE RM 1B31		RECEPTACLES	720	20 1	B	20 1	900	RECEPTACLES		OFF RM 1B19	22
23	EYELANE RM 1B31		RECEPTACLES	720	20 1	C	20 1	720	RECEPTACLES		OFF RM 1B19, 20	24
25	EYELANE RM 1B29		RECEPTACLES	1340	20 1	A	20 1	540	RECEPTACLES		VISUAL RM 1B22	26
27	EYELANE RM 1B29		RECEPTACLES	720	20 1	B	20 1	1200	RECEPTACLES		VISUAL RM 1B22	28
29	EYELANE RM 1B29		RECEPTACLES	800	20 1	C	20 1	1200	RECEPTACLES		VISUAL RM 1B22	30
31	EYELANE RM 1B29, 31		RECEPTACLES	360	20 1	A	20 1	540	RECEPTACLES		VISUAL RM 1B22	32
33	EYELANE RM 1B25		RECEPTACLES	1340	20 1	B	20 1	1200	RECEPTACLES		VISUAL RM 1B24	34
35	EYELANE RM 1B25		RECEPTACLES	720	20 1	C	20 1	1200	RECEPTACLES		VISUAL RM 1B24	36
37	EYELANE RM 1B25		RECEPTACLES	800	20 1	A	20 1	540	RECEPTACLES		VISUAL RM 1B24	38
39	VISUAL RM 1B23		RECEPTACLES	540	20 1	B	20 1	540	RECEPTACLES		VISUAL RM 1B24	40
41	VISUAL RM 1B23		RECEPTACLES	540	20 1	C	20 1	1200	RECEPTACLES		VISUAL RM 1B26	42
43	VISUAL RM 1B26		RECEPTACLES	720	20 1	A	20 1	540	RECEPTACLES		VISUAL RM 1B22, 24, 26	44
45	VISUAL RM 1B23		RECEPTACLES	1200	20 1	B	20 1	1200	RECEPTACLES		VISUAL RM 1B25	46
47	VISUAL RM 1B21		RECEPTACLES	540	20 1	C	20 1	1200	RECEPTACLES		VISUAL RM 1B26	48
49	VISUAL RM 1B21		RECEPTACLES	1560	20 1	A	20 1	720	RECEPTACLES		WAIT RM 1B28	50
51	VISUAL RM 1B21		RECEPTACLES	1200	20 1	B	20 1	540	RECEPTACLES		RECEPTION RM 1B04	52
53	VISUAL RM 1B21, 23, 25		RECEPTACLES	720	20 1	C	20 1	1200	RECEPTACLES		VISUAL RM 1B21	54
55	SPARE		SPARE	0	20 1	A	30 3	0	GEN		SPD	56
57	SPARE		SPARE	0	20 1	B	"	-			"	58
59	SPARE		SPARE	0	20 1	C	"	-			"	60
61	SPARE		SPARE	0	20 1	A	20 1	0	SPARE		SPARE	62
63	SPARE		SPARE	0	20 1	B	20 1	0	SPARE		SPARE	64
65	SPARE		SPARE	0	20 1	C	20 1	0	SPARE		SPARE	66
67	SPARE		SPARE	0	20 1	A	20 1	0	SPARE		SPARE	68
69	SPARE		SPARE	0	20 1	B	20 1	0	SPARE		SPARE	70
71	SPARE		SPARE	0	20 1	C	20 1	0	SPARE		SPARE	72
73	SPARE		SPARE	0	20 1	A	0 1	0	SPACE		SPACE	74
75	SPARE		SPARE	0	20 1	B	20 1	0	SPARE		SPARE	76
77	SPARE		SPARE	0	20 1	C	20 1	0	SPARE		SPARE	78
79	SPARE		SPARE	0	20 1	A	0 3	21240	NONE		C-NL1B1_CBL	80
81	SPARE		SPARE	0	20 1	B	"	-			"	82
83	SPARE		SPARE	0	20 1	C	"	-			"	84

ALL CONNECTED	KVA	3P AVE AMPS	* PHASE TOTALS	VA	AMPS	BUS TOTALS	KVA
TOTAL CONNECTED	69.85	193.9	* A-N	23161.0	192.9	CONNECTED	69.85
TOTAL DEMAND	46.81	129.9	* B-N	23228.0	193.4	DEMAND	46.81
TOTAL DESIGN	46.81	129.9	* C-N	23461.0	195.4	DESIGN	46.81

PANEL: C-NP1C1 | OC DEVICE TYPE: Breaker | ENCLOSURE: NEMA 1 | MAINS(A): 250A MCB | CONTINUOUS(A): 400
LOCATION: RM 1C32 | DEVICE FAMILY: Bolt On | MOUNTING: Surface | WIRING: 3-Phase 4-Wire | BUS SC RATING(A) 10000
FED FROM: XF C-NP1C1 | VOLTAGE: 208/120 | FAULT CURRENT(A): 2990

CKT	DESCRIPTION	NOTES	DEMAND CODE	VA	OC AMPS P	PHASE	OC AMPS P	VA	DEMAND CODE	NOTES	DESCRIPTION	CKT
1	TREATMENT RM. 1D04		RECEPTACLES	720	20 1	A	20 1	1340	RECEPTACLES		TREATMENT RM. 1D04	2
3	TREATMENT RM. 1D04		GENERAL LOAD	800	20 1	B	20 1	720	RECEPTACLES		TREATMENT RM. 1D02	4
5	TREATMENT RM. 1D02		RECEPTACLES	1340	20 1	C	20 1	800	GENERAL LOAD		TREATMENT RM. 1D02	6
7	RM. 1D00, 04, 02		RECEPTACLES	540	20 1	A	20 1	720	RECEPTACLES		CONF. RM. 1D00	8
9	CONF. RM. 1D00		RECEPTACLES	720	20 1	B	20 1	900	RECEPTACLES		OFFICE RM. 1D01A-D	10
11	OFFICE RM. 1D01A-D		RECEPTACLES	1080	20 1	C	20 1	720	RECEPTACLES		FILE RM. 1C03	12
13	RECEP RM. 1C02		RECEPTACLES	540	20 1	A	20 1	720	RECEPTACLES		RECEPTION RM. 1C02	14
15	RECEP RM. 1C63		RECEPTACLES	720	20 1	B	20 1	1340	RECEPTACLES		EYELANE RM. 1C63	16
17	EYELANE RM. 1C02		RECEPTACLES	1500	20 1	C	20 1	800	GENERAL LOAD		EYELANE RM. 1C63	18
19	RM. 1C63, 1C48		RECEPTACLES	540	20 1	A	20 1	900	RECEPTACLES		TECH RM. 1C61	20
21	EYELANE RM. 1C64		RECEPTACLES	720	20 1	B	20 1	1340	RECEPTACLES		EYELANE RM. 1C64	22
23	EYELANE RM. 1C64		GENERAL LOAD	800	20 1	C	20 1	720	RECEPTACLES		EYELANE RM. 1C62	24
25	EYELANE RM. 1C62		RECEPTACLES	1340	20 1	A	20 1	800	GENERAL LOAD		EYELANE RM. 1C62	26
27	RM. 1D01A, B, 1C62		RECEPTACLES	540	20 1	B	20 1	720	RECEPTACLES		CONF RM. 1C44	28
29	TECH RM. 1C61		RECEPTACLES	1200	20 1	C	20 1	900	RECEPTACLES		TECH RM. 1C48	30
31	RM. 1C44, 1C61		RECEPTACLES	540	20 1	A	20 1	900	RECEPTACLES		SIM RM. 1C46	32
33	CONF. RM. 1C44		RECEPTACLES	900	20 1	B	20 1	540	RECEPTACLES		VIS FIELD RM. 1C43	34
35	VIS FIELD RM. 1C47		RECEPTACLES	720	20 1	C	20 1	540	RECEPTACLES		VIS FIELD RM. 1C45	36
37	VIS FIELD RM. 1C45		RECEPTACLES	720	20 1	A	20 1	360	RECEPTACLES		VIS FIELD RM. 1C45	38
39	OFF RM. 1C23		RECEPTACLES	900	20 1	B	20 1	720	RECEPTACLES		CORR RM. 1D99A	40
41	CORR. RM. 1C99E		RECEPTACLES	900	20 1	C	20 1	540	RECEPTACLES		CORR RM. 1B99G	42
43	WAIT. RM. 1C00C		RECEPTACLES	540	20 1	A	20 1	720	RECEPTACLES		WAIT RM. 1C00C	44
45	SIM RM 1C46		RECEPTACLES	180	20 1	B	20 1	180	RECEPTACLES		RECEPT RM. 1C46	46
47	EWC RM 1B99G		RECEPTACLES	1500	20 1	C	20 1	500	GENERAL LOAD		AUTODOOR RM. 1C46	48
49	SIM RM 1C47, 48		RECEPTACLES	540	20 1	A	20 1	540	RECEPTACLES		RECEPT RM. 1C23	50
51	FCU RM 1C00A		MOTOR 2	2714	20 2	B	20 2	2048	MOTOR 2		FCU RM 1C57	52
53	"			-	"	C	"	-			"	54
55	FCU RM 1B99J		MOTOR 2	2714	20 2	A	20 2	2714	MOTOR 2		FCU RM 1C99H	56
57	"			-	"	B	"	-			"	58
59	FCU RM 1B99H		MOTOR 2	2000	20 2	C	20 2	2000	MOTOR 2		FCU RM 1C47, 69	60
61	"			-	"	A	"	-			"	62
63	FCU RM 2C79		MOTOR 2	1024	20 2	B	20 1	0	SPARE		SPARE	64
65	"			-	"	C	20 1	0	SPARE		SPARE	66
67	SPARE		SPARE	0	20 1	A	30 3	0	GEN		SPD	68
69	SPARE		SPARE	0	20 1	B	"	-			"	70
71	SPARE		SPARE	0	20 1	C	"	-			"	72
73	SPACE		SPACE	0	0 1	A	20 1	0	SPARE		SPARE	74
75	SPACE		SPACE	0	0 1	B	20 1	0	SPARE		SPARE	76
77	SPACE		SPACE	0	0 1	C	20 1	0	SPARE		SPARE	78
79	C-NL1C1_CBL		NONE	46940	150 3	A	0 1	0	SPACE		SPACE	80
81	"			-	"	B	0 1	0	SPACE		SPACE	82
83	"			-	"	C	0 1	0	SPACE		SPACE	84

ALL CONNECTED	KVA	3P AVE AMPS	* PHASE TOTALS	VA	AMPS	BUS TOTALS	KVA
TOTAL CONNECTED	101.67	282.2	* A-N	33380.7	278.0	CONNECTED	101.67
TOTAL DEMAND	70.36	195.3	* B-N	33193.7	276.4	DEMAND	70.36
TOTAL DESIGN	70.36	195.3	* C-N	35099.7	292.3	DESIGN	70.36

PANEL: C-NP1C2 | OC DEVICE TYPE: Breaker | ENCLOSURE: NEMA 1 | MAINS(A): 400A MCB | CONTINUOUS(A): 400
LOCATION: RM 1C32 | DEVICE FAMILY: Bolt On | MOUNTING: Surface | WIRING: 3-Phase 4-Wire | BUS SC RATING(A) 14000
FED FROM: XF C-NP1C2 | VOLTAGE: 208/120 | FAULT CURRENT(A): 5792

CKT	DESCRIPTION	NOTES	DEMAND CODE	VA	OC AMPS P	PHASE	OC AMPS P	VA	DEMAND CODE	NOTES	DESCRIPTION	CKT
1	RECEPTION RM 1C01, 28		RECEPTACLES	1740	20 1	A	20 1	1340	RECEPTACLES		EYELANE RM 1C34	2
3	RECEPTION RM 1C01		RECEPTACLES	540	20 1	B	20 1	720	RECEPTACLES		EYELANE RM 1C34	4
5	RECEPTION RM 1C01		RECEPTACLES	1200	20 1	C	20 1	800	GENERAL LOAD		EYELANE RM 1C34	6
7	VIS RM 1C28		RECEPTACLES	720	20 1	A	20 1	1340	RECEPTACLES		EYELANE RM 1C36	8
9	VIS RM 1C28		RECEPTACLES	540	20 1	B	20 1	720	RECEPTACLES		EYELANE RM 1C36	10
11	TOILET RM 1C22, 24		GENERAL LOAD	200	20 1	C	20 1	800	GENERAL LOAD		EYELANE RM 1C36	12
13	ELEC RM 1C32		RECEPTACLES	360	20 1	A	20 1	1340	RECEPTACLES		EYELANE RM 1C38	14
15	OFF RM 1C84		RECEPTACLES	720	20 1	B	20 1	720	RECEPTACLES		EYELANE RM 1C38	16
17	CUB RM 1C83F		RECEPTACLES	720	20 1	C	20 1	800	GENERAL LOAD		EYELANE RM 1C38	18
19	CUBRM 1C83F		RECEPTACLES	720	20 1	A	20 1	540	RECEPTACLES		EYE RM 1C34, 36, 38	20
21	CUB RM 1C83F		RECEPTACLES	720	20 1	B	20 1	1340	RECEPTACLES		EYELANET RM 1C40	22
23	CORR RM 1C99D		RECEPTACLES	540	20 1	C	20 1	720	RECEPTACLES		EYELANE RM 1C40	24
25	RECEPT RM 1C00B		RECEPTACLES	180	20 1	A	20 1	800	GENERAL LOAD		EYELANE RM 1C40	26
27	SPARE		SPARE	0	20 1	B	20 1	1340	RECEPTACLES		EYELANE RM 1C42	28
29	SPARE		SPARE	0	20 1	C	20 1	720	RECEPTACLES		EYELANE RM 1C42	30
31	SPARE		SPARE	0	20 1	A	20 1	800	GENERAL LOAD		EYELANE RM 1C42	32
33	SPARE		SPARE	0	20 1	B	20 1	540	RECEPTACLES		EYE RM 1C40, 42, 84	34
35	SPARE		SPARE	0	20 1	C	20 1	0	SPARE		SPARE	36
37	SPARE		SPARE	0	20 1	A	30 3	0	GEN		SPD	38
39	SPARE		SPARE	0	20 1	B	"	-			"	40
41	SPARE		SPARE	0	20 1	C	"	-			"	42
43	SPARE		SPARE	0	20 1	A	20 1	0	SPARE		SPARE	44
45	SPARE		SPARE	0	20 1	B	20 1	0	SPARE		SPARE	46
47	SPARE		SPARE	0	20 1	C	20 1	0	SPARE		SPARE	48
49	SPACE		SPACE	0	0 1	A	0 1	0	SPACE		SPACE	50
51	SPACE		SPACE	0	0 1	B	0 1	0	SPACE		SPACE	52
53	SPACE		SPACE	0	0 1	C	0 1	0	SPACE		SPACE	54
55	C-NL1C2_CBL		NONE	54400	225 3	A	225 3	64260	NONE		C-NL1C3_CBL	56
57	"			-	"	B	"	-			"	58
59	"			-	"	C	"	-			"	60

ALL CONNECTED	KVA	3P AVE AMPS	* PHASE TOTALS	VA	AMPS	BUS TOTALS	KVA
TOTAL CONNECTED	142.94	396.8	* A-N	49433.3	411.6	CONNECTED	142.94
TOTAL DEMAND	89.65	248.8	* B-N	47453.3	395.2	DEMAND	89.65
TOTAL DESIGN	89.65	248.8	* C-N	46053.3	383.5	DESIGN	89.65

PANEL INDEX	
C-NP1A1	C-NP1B1
C-NP1C1	C-NP1C2

SYM	DESCRIPTION	DATE
	FINAL CORRECTED SET	03/26/14

NAVFAC

STATE OF MARYLAND · DAVID C. BECHTOL · No. 15006 · REGISTERED PROFESSIONAL ENGINEER · 3/26/14

HDR
ARCHITECTURE | ENGINEERING & CONSULTING
1101 KING STREET
SUITE 400
ALEXANDRIA, VIRGINIA 22314
703-518-8500

APPROVED
FOR COMMANDER NAVFAC
ACTIVITY
SATISFACTORY TO DATE

DES KM | DRW KM | CHK GM
PM/DM CHEMENJU/HILL
BRANCH MANAGER N/A
CHIEF ENG/ARCH TOM COX

DEPARTMENT OF THE NAVY
NAVAL FACILITIES ENGINEERING COMMAND
NAVAL FACILITIES ENGINEERING COMMAND ~ AGENCY
COMPONENT NAME
BASE - CITY, STATE
PROJECT STATION/INSTALLATION
BETHESDA, MD
P125 - TEMPORARY MEDICAL FACILITIES
PACKAGE 2 - CLINIC BUILDING
ELECTRICAL - PANEL SCHEDULE SHEET 8

SCALE: 12" = 1'-0"
EPROJECT NO.: 1151333
CONSTR. CONTR. NO. N62470-09-D-9044
NAVFAC DRAWING NO. 13066108
SHEET OF 0
E-708

C:\rvt\191274-MEP-F2-CENTRAL_tpongsud.rvt 3/19/2014 4:12:55 PM

PANEL: C-NP1D1 | OC DEVICE TYPE: Breaker | ENCLOSURE: NEMA 1 | MAINS(A): 250A MCB | CONTINUOUS(A): 400
LOCATION: RM 1D32 | DEVICE FAMILY: Bolt On | MOUNTING: Surface | WIRING: 3-Phase 4-Wire | BUS SC RATING(A) 10000
FED FROM: XF C-NP1D1_BUS-S | VOLTAGE: 208/120 | FAULT CURRENT(A): 6105

CKT	DESCRIPTION	NOTES	DEMAND CODE	VA	OC AMPS P	PHASE	OC AMPS P	VA	DEMAND CODE	NOTES	DESCRIPTION	CKT
1	ELEC RM 1D32		RECEPTACLES	540	20 1	A	20 1	540	RECEPTACLES		ELEC RM. 1D32	2
3	FA PANEL ELEC 1D32		GENERAL LOAD	500	20 1	B	20 1	540	RECEPTACLES		MED RM. 1D30	4
5	PRE/POST OP RM. 1D28		RECEPTACLES	900	20 1	C	20 1	540	RECEPTACLES		PRE/POST OP RM. 1D28	6
7	ADMIN RM. 1D26		RECEPTACLES	360	20 1	A	20 1	540	RECEPTACLES		ADMIN RM. 1D26	8
9	ADMIN RM. 1D24		RECEPTACLES	360	20 1	B	20 1	540	RECEPTACLES		ADMIN RM. 1D24	10
11	ADMIN RM. 1D22		RECEPTACLES	360	20 1	C	20 1	540	RECEPTACLES		ADMIN RM. 1D22	12
13	RM. 1D22, 1D24, 1D26		RECEPTACLES	720	20 1	A	20 1	540	RECEPTACLES		ADMIN RM. 1D22, 1D24	14
15	WAITING RM. 1D20		RECEPTACLES	720	20 1	B	20 1	720	RECEPTACLES		WAIT RM. 1D20	16
17	STORAGE RM. 1D18		RECEPTACLES	720	20 1	C	20 1	720	RECEPTACLES		LOCKR RM. 1D16, 1D17	18
19	RM. 1D99B, 1D99E, 1D99D		RECEPTACLES	720	20 1	A	20 2	2700	MOTOR 2		FCU RM 1D99D	20
21	SPARE		SPARE	0	20 1	B	"	-			"	22
23	SPARE		SPARE	0	20 1	C	20 2	2048	MOTOR 2		FCU RM 1D32	24
25	SPARE		SPARE	0	20 1	A	"	-			"	26
27	SPARE		SPARE	0	20 1	B	20 1	0	SPARE		SPARE	28
29	SPARE		SPARE	0	20 1	C	20 1	0	SPARE		SPARE	30
31	SPACE		SPACE	0	20 1	A	30 3	0	GEN		SPD	32
33	SPARE		SPARE	0	20 1	B	"	-			"	34
35	SPARE		SPARE	0	20 1	C	"	-			"	36
37	C-NL1D2_CBL		NONE	37620	125 3	A	125 3	30700	NONE		C-NL1D1_CBL	38
39	"			-	"	B	"	-			"	40
41	"			-	"	C	"	-			"	42

ALL CONNECTED	KVA	3P AVE AMPS	* PHASE TOTALS	VA	AMPS	BUS TOTALS	KVA
TOTAL CONNECTED	84.19	233.7	* A-N	29107.3	242.4	CONNECTED	84.19
TOTAL DEMAND	52.92	146.9	* B-N	27503.3	229.0	DEMAND	52.92
TOTAL DESIGN	52.92	146.9	* C-N	27577.3	229.6	DESIGN	52.92

PANEL: C-NP2A1 | OC DEVICE TYPE: Breaker | ENCLOSURE: NEMA 1 | MAINS(A): 400A MCB | CONTINUOUS(A): 400
LOCATION: RM 2A34 | DEVICE FAMILY: Bolt On | MOUNTING: Surface | WIRING: 3-Phase 4-Wire | BUS SC RATING(A) 10000
FED FROM: XF C-NP2A1_BUS-S | VOLTAGE: 208/120 | FAULT CURRENT(A): 5417

CKT	DESCRIPTION	NOTES	DEMAND CODE	VA	OC AMPS P	PHASE	OC AMPS P	VA	DEMAND CODE	NOTES	DESCRIPTION	CKT
1	RECEPT RM 2A24, 25		RECEPTACLES	1200	20 1	A	20 1	1080	RECEPTACLES		RECEPT RM 2A39	2
3	RECEPT RM 2A41		RECEPTACLES	1080	20 1	B	20 1	900	RECEPTACLES		RECEPT RM 2A25	4
5	RECEPT RM 2A24		RECEPTACLES	900	20 1	C	20 1	660	RECEPTACLES		RECEPT RM 2A70, 72	6
7	RECEPT RM 2A70		RECEPTACLES	1080	20 1	A	20 1	720	RECEPTACLES		RECEPT RM 2A72	8
9	RECEPT RM 2A99E, J, M		RECEPTACLES	720	20 1	B	20 1	600	RECEPTACLES		RECEPT RM 2A64, 66	10
11	RECEPT RM 2A69, 71, 73		RECEPTACLES	900	20 1	C	20 1	720	RECEPTACLES		RECEPT RM 2A71	12
13	RECEPT RM 2A69		RECEPTACLES	720	20 1	A	20 1	720	RECEPTACLES		RECEPT RM 2A73	14
15	RECEPT RM 2A64		RECEPTACLES	900	20 1	B	20 1	900	RECEPTACLES		RECEPT RM 2A66	16
17	RECEPT RM 2A30A		RECEPTACLES	900	20 1	C	20 1	1200	RECEPTACLES		RECEPT RM 2A29, 30, A	18
19	RECEPT RM 2A30B		RECEPTACLES	720	20 1	A						20
21	RECEPT RM 2A26, 27, 28		RECEPTACLES	900	20 1	B	20 1	900	RECEPTACLES		RECEPT RM 2A26	22
23	RECEPT RM 2A28		RECEPTACLES	1080	20 1	C	20 1	1080	RECEPTACLES		RECEPT RM 2A27	24
25	FCU RM 2A99F		MOTOR 2	2714	20 2	A	20 1	900	RECEPTACLES		RECEPT RM 2A29	26
27	"			-	"	B	20 1	900	RECEPTACLES		RECEPT RM 2A29	28
29	FCU RM 2A05		MOTOR 2	2714	20 2	C	20 2	2714	MOTOR 2		FCU RM 2A28	30
31	"			-	"	A	"	-			"	32
33	FCU RM 2A05		MOTOR 2	2000	20 2	B	20 1	190	MOTOR 2		EF-4-2 ROOF	34
35	"			-	"	C	20 1	125	MOTOR 2		EF-4-3 ROOF	36
37	RECEPT RM 2A39, 41		RECEPTACLES	1600	20 1	A	20 1	125	MOTOR 2		EF-4-4 ROOF	38
39	RECEPT RM 2A30B		RECEPTACLES	1670	20 1	B	20 1	0	SPARE		SPARE	40
41	RECEPT RM 2A30B		RECEPTACLES	1450	20 1	C	20 1	0	SPARE		SPARE	42
43	RECEPT RM 2A30B		RECEPTACLES	1450	20 1	A	30 3	0	GEN		SPD	44
45	EF ROOF		MOTOR 2	190	20 1	B	"	-			"	46
47	SPARE		SPARE	0	20 1	C	"	-			"	48
49	SPARE		SPARE	0	20 1	A	0 1	0	SPACE		SPACE	50
51	SPACE		SPACE	0	0 1	B	0 1	0	SPACE		SPACE	52
53	SPACE		SPACE	0	0 1	C	0 1	0	SPACE		SPACE	54
55	C-NL2A2_CBL		NONE	45550	150 3	A	125 3	33020	NONE		C-NL2A1_CBL	56
57	"			-	"	B	"	-			"	58
59	"			-	"	C	"	-			"	60

ALL CONNECTED	KVA	3P AVE AMPS	* PHASE TOTALS	VA	AMPS	BUS TOTALS	KVA
TOTAL CONNECTED	117.89	327.2	* A-N	40576.0	337.9	CONNECTED	117.89
TOTAL DEMAND	69.40	192.6	* B-N	38397.0	319.7	DEMAND	69.40
TOTAL DESIGN	69.40	192.6	* C-N	38919.0	324.1	DESIGN	69.40

PANEL: C-NP2B1 | OC DEVICE TYPE: Breaker | ENCLOSURE: NEMA 1 | MAINS(A): 250A MCB | CONTINUOUS(A): 400
LOCATION: RM 2B48A | DEVICE FAMILY: Bolt On | MOUNTING: Surface | WIRING: 3-Phase 4-Wire | BUS SC RATING(A) 10000
FED FROM: XF C-NP2B1 | VOLTAGE: 208/120 | FAULT CURRENT(A): 2720

CKT	DESCRIPTION	NOTES	DEMAND CODE	VA	OC AMPS P	PHASE	OC AMPS P	VA	DEMAND CODE	NOTES	DESCRIPTION	CKT
1	ELEC RM 2B48A		RECEPTACLES	180	20 1	A	20 1	1080	RECEPTACLES		CORR RM 2B99G	2
3	THER RM 2B46		RECEPTACLES	720	20 1	B	20 1	900	RECEPTACLES		OFF RM 2B50	4
5	THER RM 2B46		RECEPTACLES	540	20 1	C	20 1	900	RECEPTACLES		OFF RM 2B51	6
7	OFF RM 2B53, 54, 55		RECEPTACLES	1000	20 1	A	20 1	900	RECEPTACLES		OFF RM 2B52	8
9	OFF RM 2B54		RECEPTACLES	900	20 1	B	20 1	900	RECEPTACLES		OFF RM 2B50, 51, 52	10
11	OFF RM 2B55		RECEPTACLES	1020	20 1	C	20 1	900	RECEPTACLES		OFF RM 2B53	12
13	CUB RM 2B31A		RECEPTACLES	1200	20 1	A	20 1	1200	RECEPTACLES		OFF RM 2B43, 45, 47	14
15	CUB RM 2B31C		RECEPTACLES	720	20 1	B	20 1	720	RECEPTACLES		OFF RM 2B49	16
17	CUB RM 2B31A		RECEPTACLES	720	20 1	C	20 1	900	RECEPTACLES		OFF RM 2B47	18
19	OFF CO RM 2B29, 39, 41		RECEPTACLES	900	20 1	A	20 1	900	RECEPTACLES		OFF RM 2B45	20
21	OFF RM 2B39		RECEPTACLES	900	20 1	B	20 1	900	RECEPTACLES		OFF RM 2B43	22
23	OFF RM 2B37		RECEPTACLES	900	20 1	C	20 1	900	RECEPTACLES		RECEPT RM 2B41	24
25	OFF RM 2B35		RECEPTACLES	900	20 1	A	20 1	0	SPARE		SPARE	26
27	LOB RM 2A99A		RECEPTACLES	540	20 1	B	20 1	0	SPARE		SPARE	28
29	CONF RM 2B29		RECEPTACLES	1080	20 1	C	20 1	0	SPARE		SPARE	30
31	CONF RM 2B29		RECEPTACLES	1084	20 1	A	20 1	1500	RECEPTACLES		RM 2B35, 36, 37	32
33	SPARE		SPARE	0	20 1	B	20 1	1080	RECEPTACLES		EXAM RM 2B25	34
35	OFF RM 2B34		RECEPTACLES	900	20 1	C	20 1	900	RECEPTACLES		WAIT RM 2B38	36
37	OFF RM 2B18, 34, 36		RECEPTACLES	1200	20 1	A	20 1	190	MOTOR 2		EF-4-1	38
39	RECEPT RM 2B36		RECEPTACLES	900	20 1	B	20 1	125	MOTOR 2		EF-4-5	40
41	STOR RM 2B18A		RECEPTACLES	720	20 1	C	20 1	0	SPARE		SPARE	42
43	RECEPTION RM 2B18		RECEPTACLES	1800	20 1	A	20 1	300	RECEPTACLES		CONF RM 2B19	44
45	RECEPTION RM 2B18		RECEPTACLES	720	20 1	B	20 1	1804	RECEPTACLES		CONF RM 2B19	46
47	CONF RM 2B19		RECEPTACLES	1670	20 1	C	20 1	540	RECEPTACLES		CONF RM 2B19	48
49	WAIT RM 2B17		RECEPTACLES	540	20 1	A	20 1	1000	RECEPTACLES		OFF RM 2B22	50
51	RECEPT RM 2B22, 24		RECEPTACLES	1200	20 1	B	20 1	1000	RECEPTACLES		OFF RM 2B24	52
53	RECEPT RM 2B22		RECEPTACLES	720	20 1	C	20 1	720	RECEPTACLES		OFF RM 2B24	54
55	OFF RM 2B26		RECEPTACLES	900	20 1	A	20 1	900	RECEPTACLES		OFF RM 2B30	56
57	OFF RM 2B26, 28, 30		RECEPTACLES	900	20 1	B	20 1	600	RECEPTACLES		CUB RM 2B32A, B	58
59	OFF RM 2B28		RECEPTACLES	900	20 1	C	20 1	720	RECEPTACLES		CUB RM 2B32A, B	60
61	CUB RM 2B32G		RECEPTACLES	720	20 1	A	20 1	600	RECEPTACLES		CUB RM 2B32J	62
63	CUB RM 2B32G		RECEPTACLES	1200	20 1	B	20 1	720	RECEPTACLES		CUB RM 2B32J	64
65	CUB RM 2B32G		RECEPTACLES	720	20 1	C	20 1	360	RECEPTACLES		RECEPT ROOF	66
67	SPARE		SPARE	0	20 1	A	30 3	0	GEN		SPD	68
69	SPARE		SPARE	0	20 1	B	"	-			"	70
71	SPARE		SPARE	0	20 1	C	"	-			"	72
73	SPACE		SPACE	0	0 1	A	20 1	0	SPARE		SPARE	74
75	SPACE		SPACE	0	0 1	B	20 1	0	SPARE		SPARE	76
77	FCU RM 2B29		MOTOR 2	2000	20 2	C	20 1	0	SPARE		SPARE	78
79	"			-	"	A	0 1	0	SPACE		SPACE	80
81	FCU RM 2B41		MOTOR 2	2048	20 2	B	20 2	2048	MOTOR 2		FCU RM 2B41	82
83	"			-	"	C	"	-			"	84

ALL CONNECTED	KVA	3P AVE AMPS	* PHASE TOTALS	VA	AMPS	BUS TOTALS	KVA
TOTAL CONNECTED	59.27	164.5	* A-N	19994.0	166.5	CONNECTED	59.27
TOTAL DEMAND	37.84	105.0	* B-N	19497.0	162.4	DEMAND	37.84
TOTAL DESIGN	37.84	105.0	* C-N	19778.0	164.7	DESIGN	37.84

PANEL: C-NP2B2 | OC DEVICE TYPE: Breaker | ENCLOSURE: NEMA 1 | MAINS(A): 250A MCB | CONTINUOUS(A): 400
LOCATION: RM 2B84 | DEVICE FAMILY: Bolt On | MOUNTING: Surface | WIRING: 3-Phase 4-Wire | BUS SC RATING(A) 10000
FED FROM: XF C-NP2B2_BUS-S | VOLTAGE: 208/120 | FAULT CURRENT(A): 5104

CKT	DESCRIPTION	NOTES	DEMAND CODE	VA	OC AMPS P	PHASE	OC AMPS P	VA	DEMAND CODE	NOTES	DESCRIPTION	CKT
1	STOR RM 2B56		RECEPTACLES	720	20 1	A	20 1	720	RECEPTACLES		STOR RM 2B56, A	2
3	STOR RM 2B56A		RECEPTACLES	720	20 1	B	20 1	1260	RECEPTACLES		CORR RM 2B99A, K, L	4
5	STOR RM 2B56, A		RECEPTACLES	1200	20 1	C	20 1	900	RECEPTACLES		OFF RM 2B57	6
7	CONF RM 2B58, 60, 81		RECEPTACLES	1200	20 1	A	20 1	900	RECEPTACLES		OFF RM 2B57, 59, 61	8
9	OFF RM 2B60		RECEPTACLES	900	20 1	B	20 1	900	RECEPTACLES		OFF RM 2B59	10
11	OFF RM 2B58		RECEPTACLES	1080	20 1	C	20 1	900	RECEPTACLES		OFF RM 2B61	12
13	CONF RM 2B58		RECEPTACLES	1264	20 1	A	20 1	200	GENERAL LOAD		FLUSH RM 2B73, 85	14
15	CONF RM 2B81		RECEPTACLES	1080	20 1	B	20 1	900	RECEPTACLES		WAIT RM 2B74	16
17	CONF RM 2B81		RECEPTACLES	1264	20 1	C	20 1	720	RECEPTACLES		CUB RM 2B75A, B	18
19	OFF RM 2B64, 75		RECEPTACLES	900	20 1	A	20 1	1200	RECEPTACLES		OFF RM 2B75D	20
21	OFF RM 2B64		RECEPTACLES	900	20 1	B	20 1	720	RECEPTACLES		CUB RM 2B72D, E	22
23	OFF RM 2B62		RECEPTACLES	900	20 1	C	20 1	540	RECEPTACLES		CUB RM 2B75C	24
25	SEC RM 2B76		RECEPTACLES	1180	20 1	A	20 1	360	RECEPTACLES		OFF RM 2B76A, B	26
27	OFF RM 2C00, 80		RECEPTACLES	600	20 1	B	20 1	1200	RECEPTACLES		OFF RM 2B76	28
29	OFF RM 2C00		RECEPTACLES	900	20 1	C	20 1	720	RECEPTACLES		OFF RM 2B78A, B	30
31	OFF RM 2C80		RECEPTACLES	900	20 1	A	20 1	1200	RECEPTACLES		OFF RM 2B66, 68	32
33	OFFICE RM 2C77		RECEPTACLES	900	20 1	B	20 1	900	RECEPTACLES		OFF RM 2B66	34
35	OFF RM 2C79		RECEPTACLES	900	20 1	C	20 1	900	RECEPTACLES		OFF RM 2B68	36
37	OFF RM 2C63		RECEPTACLES	900	20 1	A	20 1	900	RECEPTACLES		OFF RM 2B63, 65, 67	38
39	OFF RM 2C65		RECEPTACLES	900	20 1	B	20 1	900	RECEPTACLES		OFF RM 2B67	40
41	RECEPT ROOF		RECEPTACLES	180	20 1	C	20 2	2048	MOTOR 2		FCU RM 2B99L	42
43	SPARE		SPARE	0	20 1	A	"	-			"	44
45	EF-3-2		MOTOR 2	125	20 1	B	20 2	2048	MOTOR 2		FCU RM 2B99B	46
47	EF-3-3		MOTOR 2	125	20 1	C	"	-			"	48
49	EF-3-4		MOTOR 2	125	20 1	A	20 1	0	SPARE		SPARE	50
51	SPARE		SPARE	0	20 1	B	20 2	2048	MOTOR 2		FCU RM 2C03	52
53	SPARE		SPARE	0	20 1	C	"	-			"	54
55	C-NL2B2_CBL		NONE	48908	150 3	A	30 3	0	GEN		SPD	56
57	"			-	"	B	"	-			"	58
59	"			-	"	C	"	-			"	60

ALL CONNECTED	KVA	3P AVE AMPS	* PHASE TOTALS	VA	AMPS	BUS TOTALS	KVA
TOTAL CONNECTED	91.86	255.0	* A-N	29995.7	249.8	CONNECTED	91.86
TOTAL DEMAND	54.29	150.7	* B-N	31255.7	260.3	DEMAND	54.29
TOTAL DESIGN	54.29	150.7	* C-N	30603.7	254.8	DESIGN	54.29

PANEL INDEX	
C-NP1C1	C-NP2A1
C-NP2B1	C-NP2B2

SYM	DESCRIPTION	DATE
	FINAL CORRECTED SET	03/26/14

NAVFAC

HDR
ARCHITECTURE | ENGINEERING & CONSULTING
1101 KING STREET
SUITE 400
ALEXANDRIA, VIRGINIA 22314
703-518-8500

APPROVED
FOR COMMANDER NAVFAC
ACTIVITY
SATISFACTORY TO DATE

DES KM | DRW KM | CHK GM
PM/DM CHEMENJU/HILL
BRANCH MANAGER N/A
CHIEF ENG/ARCH TOM COX

DEPARTMENT OF THE NAVY
NAVAL FACILITIES ENGINEERING COMMAND
NAVAL FACILITIES ENGINEERING COMMAND ~ AGENCY
COMPONENT NAME
BASE - CITY, STATE
BETHESDA, MD
PROJECT STATION/INSTALLATION
P125 - TEMPORARY MEDICAL FACILITIES PACKAGE 2 - CLINIC BUILDING
ELECTRICAL - PANEL SCHEDULE SHEET 9

SCALE: 12" = 1'-0"
EPROJECT NO.: 1151333
CONSTR. CONTR. NO. N62470-09-D-9044
NAVFAC DRAWING NO. 13066109
SHEET OF 0

E-709

C:\rvt\191274-MEP-F2-CENTRAL_tpongsud.rvt 3/19/2014 4:12:57 PM

PANEL: C-NP2C1 | OC DEVICE TYPE: Breaker | ENCLOSURE: NEMA 1 | MAINS(A): 250A MCB | CONTINUOUS(A): 400
LOCATION: RM 2C38 | DEVICE FAMILY: Bolt On | MOUNTING: Surface | WIRING: 3-Phase 4-Wire | BUS SC RATING(A) 10000
FED FROM: XF C-NP2C1_BUS-S | VOLTAGE: 208/120 | FAULT CURRENT(A): 3497

CKT	DESCRIPTION	NOTES	DEMAND CODE	VA	OC AMPS P	PHASE	OC AMPS P	VA	DEMAND CODE	NOTES	DESCRIPTION	CKT
1	ELEC RM 2C38		RECEPTACLES	180	20 1	A	20 1	900	RECEPTACLES		OFF RM 2C37, 41, 72	2
3	FLUSH RM 2C36, 34		GENERAL LOAD	200	20 1	B	20 1	900	RECEPTACLES		OFF RM 2C37	4
5	CORR RM 2C99E		RECEPTACLES	360	20 1	C	20 1	720	RECEPTACLES		STOR RM 2C07, 39	6
7	CLASS RM 2C09		RECEPTACLES	1080	20 1	A	20 1	900	RECEPTACLES		OFF RM 2C72	8
9	CLASS RM 2C09		RECEPTACLES	1264	20 1	B	20 1	900	RECEPTACLES		OFF RM 2C41	10
11	CLASS RM 2C09		RECEPTACLES	360	20 1	C	20 1	900	RECEPTACLES		OFF RM 2C71	12
13	CLASS RM 2C09		RECEPTACLES	360	20 1	A	20 1	900	RECEPTACLES		OFF RM 2C70	14
15	CLASS RM 2C09		RECEPTACLES	360	20 1	B	20 1	900	RECEPTACLES		OFF RM 2C43, 70, 71	16
17	CLASS RM 2C09		RECEPTACLES	360	20 1	C	20 1	900	RECEPTACLES		OFF RM 2C43	18
19	CLASS RM 2C09		RECEPTACLES	360	20 1	A	20 1	900	RECEPTACLES		OFF RM 2C45, 47, 69	20
21	CLASS RM 2C09		RECEPTACLES	1180	20 1	B	20 1	900	RECEPTACLES		OFF RM 2C69	22
23	CLASS RM 2C09		RECEPTACLES	720	20 1	C	20 1	900	RECEPTACLES		OFF RM 2C45	24
25	RM 2C09, 51		RECEPTACLES	1200	20 1	A	20 1	900	RECEPTACLES		OFF RM 2C47	26
27	LAB RM 2C51		RECEPTACLES	900	20 1	B	20 1	1200	RECEPTACLES		OFF RM 2C49	28
29	LAB RM 2C51		RECEPTACLES	720	20 1	C	20 1	1080	RECEPTACLES		OFF RM 2C49	30
31	CUB RM 2C49A		RECEPTACLES	1200	20 1	A	20 1	900	RECEPTACLES		OFF RM 2C49	32
33	CUB RM 2C49E		RECEPTACLES	1200	20 1	B	20 1	920	RECEPTACLES		STOR RM 2C49P	34
35	CUB RM 2C49K, L, M		RECEPTACLES	1200	20 1	C	20 1	1670	RECEPTACLES		STOR RM 2C49P	36
37	OFF RM 2C49J, K, L		RECEPTACLES	1080	20 1	A	20 1	1450	RECEPTACLES		STOR RM 2C49P	38
39	OFF RM 2C49N		RECEPTACLES	800	20 1	B	20 1	600	RECEPTACLES		RECEPTION RM 2C42	40
41	RECEPT RM 2C49P		RECEPTACLES	720	20 1	C	20 1	720	RECEPTACLES		RECEPTION RM 2C42	42
43	CUB RM 2C49G		RECEPTACLES	720	20 1	A	20 1	1440	RECEPTACLES		RECEPTION RM 2C42	44
45	CUB RM 2C49G		RECEPTACLES	720	20 1	B	20 1	1670	RECEPTACLES		CORR RM 2C99E	46
47	CUB RM 2C49G		RECEPTACLES	1200	20 1	C	20 1	960	RECEPTACLES		CORR RM 2C99E	48
49	RM 2C50		RECEPTACLES	1200	20 1	A	20 1	125	MOTOR 2		EF-2-1	50
51	RM 2C50		RECEPTACLES	1000	20 1	B	20 1	125	MOTOR 2		EF-2-3	52
53	RM 2C50		RECEPTACLES	900	20 1	C	20 1	125	MOTOR 2		EF-2-2	54
55	FCU RM 2C99E		MOTOR 2	2048	20 2	A	20 1	125	MOTOR 2		EF-1-1	56
57	"			-	"	B	20 1	125	MOTOR 2		EF-3-1	58
59	FCU RM 2C13		MOTOR 2	2048	20 2	C	20 1	125	MOTOR 2		EF-3-5	60
61	"			-	"	A	20 1	0	SPARE		SPARE	62
63	SPARE		SPARE	0	20 1	B	20 2	2664	MOTOR 2		FCU RM 2C13	64
65	SPARE		SPARE	0	20 1	C	"	-			"	66
67	SPARE		SPARE	0	20 1	A	30 3	0	GEN		SPD	68
69	SPARE		SPARE	0	20 1	B	"	-			"	70
71	SPARE		SPARE	0	20 1	C	"	-			"	72
73	SPACE		SPACE	0	0 1	A	20 1	0	SPARE		SPARE	74
75	SPACE		SPACE	0	0 1	B	20 1	0	SPARE		SPARE	76
77	SPACE		SPACE	0	0 1	C	20 1	0	SPARE		SPARE	78
79	C-NL2C1_CBL		NONE	51900	150 3	A	0 1	0	SPACE		SPACE	80
81	"			-	"	B	0 1	0	SPACE		SPACE	82
83	"			-	"	C	0 1	0	SPACE		SPACE	84

ALL CONNECTED	KVA	3P AVE AMPS	* PHASE TOTALS	VA	AMPS	BUS TOTALS	KVA
TOTAL CONNECTED	105.08	291.7	* A-N	35268.0	293.7	CONNECTED	105.08
TOTAL DEMAND	61.40	170.4	* B-N	35520.0	295.8	DEMAND	61.40
TOTAL DESIGN	61.40	170.4	* C-N	34296.0	285.6	DESIGN	61.40

PANEL: C-UD1D1 | OC DEVICE TYPE: Breaker | ENCLOSURE: NEMA 1 | MAINS(A): MLO | CONTINUOUS(A): 100
LOCATION: RM 1D32 | DEVICE FAMILY: Bolt On | MOUNTING: Surface | WIRING: 3-Phase 4-Wire | BUS SC RATING(A) 0
FED FROM: C-UPSD-1_BUS-D | VOLTAGE: 480/277 | FAULT CURRENT(A): 12341

CKT	DESCRIPTION	NOTES	DEMAND CODE	VA	OC AMPS P	PHASE	OC AMPS P	VA	DEMAND CODE	NOTES	DESCRIPTION	CKT
1	SPACE		SPACE	0	0 1	A	0 1	0	SPACE		SPACE	2
3	SPACE		SPACE	0	0 1	B	0 1	0	SPACE		SPACE	4
5	SPACE		SPACE	0	0 1	C	0 1	0	SPACE		SPACE	6
7	SPACE		SPACE	0	0 1	A	0 1	0	SPACE		SPACE	8
9	SPACE		SPACE	0	0 1	B	0 1	0	SPACE		SPACE	10
11	SPACE		SPACE	0	0 1	C	0 1	0	SPACE		SPACE	12
13	SPACE		SPACE	0	0 1	A	0 1	0	SPACE		SPACE	14
15	SPACE		SPACE	0	0 1	B	0 1	0	SPACE		SPACE	16
17	SPACE		SPACE	0	0 1	C	0 1	0	SPACE		SPACE	18
19	SPACE		SPACE	0	0 1	A	0 1	0	SPACE		SPACE	20
21	SPACE		SPACE	0	0 1	B	0 1	0	SPACE		SPACE	22
23	SPACE		SPACE	0	0 1	C	0 1	0	SPACE		SPACE	24
25	SPACE		SPACE	0	0 1	A	0 1	0	SPACE		SPACE	26
27	SPACE		SPACE	0	0 1	B	0 1	0	SPACE		SPACE	28
29	SPACE		SPACE	0	0 1	C	0 1	0	SPACE		SPACE	30
31	SPACE		SPACE	0	0 1	A	0 1	0	SPACE		SPACE	32
33	SPACE		SPACE	0	0 1	B	0 1	0	SPACE		SPACE	34
35	SPACE		SPACE	0	0 1	C	0 1	0	SPACE		SPACE	36
37	XF C-UP1D1_CBL		NONE	21880	50 3	A	0 1	0	SPACE		SPACE	38
39	"			-	"	B	0 1	0	SPACE		SPACE	40
41	"			-	"	C	0 1	0	SPACE		SPACE	42

ALL CONNECTED	KVA	3P AVE AMPS	* PHASE TOTALS	VA	AMPS	BUS TOTALS	KVA
TOTAL CONNECTED	21.88	26.3	* A-N	7293.3	26.3	CONNECTED	21.88
TOTAL DEMAND	21.29	25.6	* B-N	7293.3	26.3	DEMAND	21.29
TOTAL DESIGN	21.29	25.6	* C-N	7293.3	26.3	DESIGN	21.29

PANEL: C-UP1A1 | OC DEVICE TYPE: Breaker | ENCLOSURE: NEMA 1 | MAINS(A): MLO | CONTINUOUS(A): 100
LOCATION: RM 1A46 | DEVICE FAMILY: Bolt On | MOUNTING: Surface | WIRING: 3-Phase 4-Wire | BUS SC RATING(A) 0
FED FROM: C-UP1D1 | VOLTAGE: 208/120 | FAULT CURRENT(A): 482

CKT	DESCRIPTION	NOTES	DEMAND CODE	VA	OC AMPS P	PHASE	OC AMPS P	VA	DEMAND CODE	NOTES	DESCRIPTION	CKT
1	COMM RM 1A56		GENERAL LOAD	500	20 1	A	20 1	1000	RECEPTACLES		RECEPT RM 1A38A	2
3	RECEPT RM 1A38A		RECEPTACLES	1000	20 1	B	20 1	1000	RECEPTACLES		RECEPT RM 1A38A	4
5	DOOR RM 1A38D		GENERAL LOAD	500	20 1	C	20 1	500	RECEPTACLES		RECEPT RM 1A99B	6
7	DOOR RM 2A42		GENERAL LOAD	500	20 1	A	20 1	500	GENERAL LOAD		DOOR RM 2A99A	8
9	HEAT TRACE RM 1A58		HEATING 1	1500	20 2	B	20 1	0	SPARE		SPARE	10
11	"			-	"	C	20 1	0	SPARE		SPARE	12
13	SPACE		SPACE	0	0 1	A	0 1	0	SPACE		SPACE	14
15	SPACE		SPACE	0	0 1	B	0 1	0	SPACE		SPACE	16
17	SPACE		SPACE	0	0 1	C	0 1	0	SPACE		SPACE	18
19	SPACE		SPACE	0	0 1	A	0 1	0	SPACE		SPACE	20
21	SPACE		SPACE	0	0 1	B	0 1	0	SPACE		SPACE	22
23	SPACE		SPACE	0	0 1	C	0 1	0	SPACE		SPACE	24
25	SPACE		SPACE	0	0 1	A	0 1	0	SPACE		SPACE	26
27	SPACE		SPACE	0	0 1	B	0 1	0	SPACE		SPACE	28
29	SPACE		SPACE	0	0 1	C	0 1	0	SPACE		SPACE	30
31	SPACE		SPACE	0	0 1	A	0 1	0	SPACE		SPACE	32
33	SPACE		SPACE	0	0 1	B	0 1	0	SPACE		SPACE	34
35	SPACE		SPACE	0	0 1	C	0 1	0	SPACE		SPACE	36
37	SPACE		SPACE	0	0 1	A	0 1	0	SPACE		SPACE	38
39	SPACE		SPACE	0	0 1	B	0 1	0	SPACE		SPACE	40
41	SPACE		SPACE	0	0 1	C	0 1	0	SPACE		SPACE	42

ALL CONNECTED	KVA	3P AVE AMPS	* PHASE TOTALS	VA	AMPS	BUS TOTALS	KVA
TOTAL CONNECTED	7.00	19.4	* A-N	2500.0	20.8	CONNECTED	7.00
TOTAL DEMAND	7.00	19.4	* B-N	2750.0	22.9	DEMAND	7.00
TOTAL DESIGN	7.00	19.4	* C-N	1750.0	14.6	DESIGN	7.00

PANEL: C-UP1D1 | OC DEVICE TYPE: Breaker | ENCLOSURE: NEMA 1 | MAINS(A): 100A MCB | CONTINUOUS(A): 100
LOCATION: RM 1D32 | DEVICE FAMILY: Bolt On | MOUNTING: Surface | WIRING: 3-Phase 4-Wire | BUS SC RATING(A) 0
FED FROM: XF C-UP1D1_BUS-S | VOLTAGE: 208/120 | FAULT CURRENT(A): 1818

CKT	DESCRIPTION	NOTES	DEMAND CODE	VA	OC AMPS P	PHASE	OC AMPS P	VA	DEMAND CODE	NOTES	DESCRIPTION	CKT
1	MED ROOM RM. 1D30		RECEPTACLES	1000	20 1	A	20 1	1000	RECEPTACLES		MED ROOM RM. 1D30	2
3	MED ROOM RM. 1D30		RECEPTACLES	1000	20 1	B	20 1	1000	RECEPTACLES		MED ROOM RM. 1D30	4
5	COMM RM. 1D66		RECEPTACLES	500	20 1	C	20 1	1000	RECEPTACLES		MED ROOM RM. 1D30	6
7	MED ROOM RM. 1D29		RECEPTACLES	1000	20 1	A	20 1	500	RECEPTACLES		COMM RM. 1C09	8
9	PRK/LASIK RM. 1D27		GENERAL LOAD	3600	20 2	B	20 1	500	RECEPTACLES		CORR RM. 1B99H	10
11	"			-	"	C	30 2	3600	REC		PRK/LASIK RM. 1D27	12
13	COMM RM. 2B86		RECEPTACLES	180	20 1	A	"	-			"	14
15	SPACE		SPACE	0	0 1	B	0 1	0	SPACE		SPACE	16
17	SPACE		SPACE	0	0 1	C	0 1	0	SPACE		SPACE	18
19	SPACE		SPACE	0	0 1	A	30 3	0	GEN		SPD	20
21	SPACE		SPACE	0	0 1	B	"	-			"	22
23	SPACE		SPACE	0	0 1	C	"	-			"	24
25	SPACE		SPACE	0	0 1	A	0 1	0	SPACE		SPACE	26
27	SPACE		SPACE	0	0 1	B	0 1	0	SPACE		SPACE	28
29	SPACE		SPACE	0	0 1	C	0 1	0	SPACE		SPACE	30
31	SPACE		SPACE	0	0 1	A	0 1	0	SPACE		SPACE	32
33	SPACE		SPACE	0	0 1	B	0 1	0	SPACE		SPACE	34
35	SPACE		SPACE	0	0 1	C	0 1	0	SPACE		SPACE	36
37	C-UP1A1_CBL		NONE	7000	50 3	A	0 1	0	SPACE		SPACE	38
39	"			-	"	B	0 1	0	SPACE		SPACE	40
41	"			-	"	C	0 1	0	SPACE		SPACE	42

ALL CONNECTED	KVA	3P AVE AMPS	* PHASE TOTALS	VA	AMPS	BUS TOTALS	KVA
TOTAL CONNECTED	21.88	60.7	* A-N	7813.3	65.1	CONNECTED	21.88
TOTAL DEMAND	20.96	58.2	* B-N	6633.3	55.2	DEMAND	20.96
TOTAL DESIGN	20.96	58.2	* C-N	7433.3	61.9	DESIGN	20.96

PANEL INDEX	
C-NP2C1	C-UD1D1
C-UP1A1	C-UP1D1

SYM	DESCRIPTION	DATE
	FINAL CORRECTED SET	03/26/14

NAVFAC

STATE OF MARYLAND — DAVID C. BECHTOL — No. 15006 — REGISTERED PROFESSIONAL ENGINEER — 3/26/14

HDR
ARCHITECTURE | ENGINEERING & CONSULTING
1101 KING STREET
SUITE 400
ALEXANDRIA, VIRGINIA 22314
703-518-8500

APPROVED
FOR COMMANDER NAVFAC
ACTIVITY
SATISFACTORY TO DATE

DES KM | DRW KM | CHK GM
PM/DM CHEMENJU/HILL
BRANCH MANAGER N/A
CHIEF ENG/ARCH TOM COX

DEPARTMENT OF THE NAVY
NAVAL FACILITIES ENGINEERING COMMAND
NAVAL FACILITIES ENGINEERING COMMAND ~ AGENCY
COMPONENT NAME
BASE - CITY, STATE
PROJECT STATION/INSTALLATION
BETHESDA, MD
P125 - TEMPORARY MEDICAL FACILITIES
PACKAGE 2 - CLINIC BUILDING
ELECTRICAL - PANEL SCHEDULE SHEET 10

SCALE: 12" = 1'-0"
EPROJECT NO.: 1151333
CONSTR. CONTR. NO. N62470-09-D-9044
NAVFAC DRAWING NO. 13066110
SHEET OF 0

E-710

C:\rvt\191274-MEP-F2-CENTRAL_tpongsud.rvt 3/19/2014 4:12:59 PM