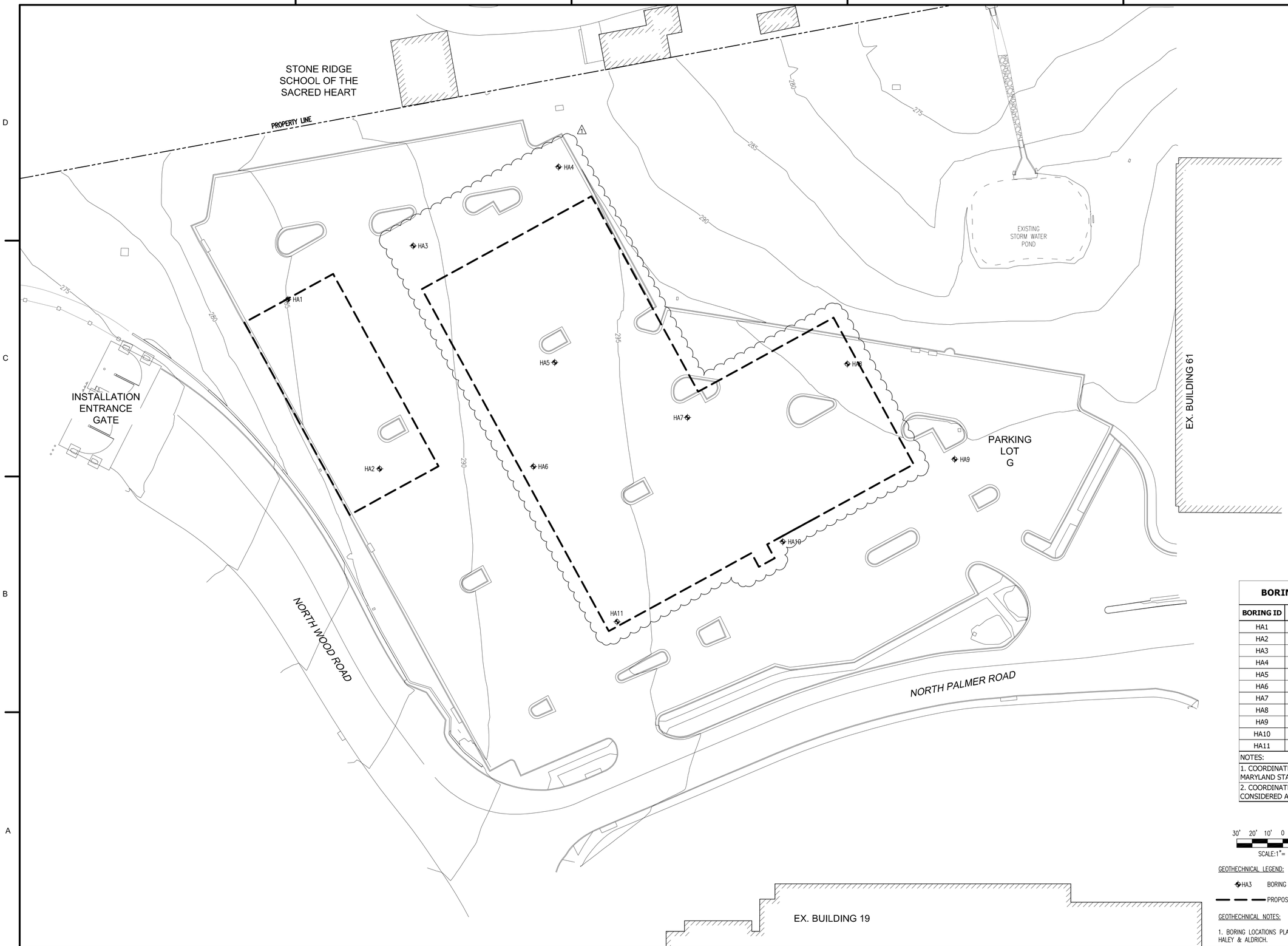

BORING LOCATIONS

BORING ID	NORTHING	EASTING
HA1	487211.76	1285055.32
HA2	487101.35	1285115.27
HA3	487246.75	1285137.09
HA4	487298.19	1285231.93
HA5	487170.71	1285229.41
HA6	487102.87	1285215.56
HA7	487134.83	1285316.01
HA8	487169.73	1285420.34
HA9	487107.60	1285490.31
HA10	487053.84	1285378.22
HA11	487001.64	1285270.10

NOTES:

1. COORDINATE SYSTEM REFERS TO MARYLAND STATE PLANE NAD 83 FEET.
2. COORDINATES LOCATION SHALL BE CONSIDERED APPROXIMATE.

30' 20' 10' 0 30'

SCALE:1"= 30'-0"

N

GEOTECHNICAL LEGEND:

HA3 BORING LOCATIONS

PROPOSED BUILDINGS OUTLINE

GEOTECHNICAL NOTES:

1. BORING LOCATIONS PLAN AND LOGS PROVIDED TO HDR BY HALEY & ALDRICH.

SYM	DESCRIPTION	DATE
1	BID OPTION	11/4/15
	FINAL CORRECTED SET	3/26/14
	100% FINAL DESIGN SUBMISSION	2/3/14
	65% VE SUBMISSION	11/25/13

NAVFAC

STATE OF MARYLAND
MICHAEL W. PUCCI
No. 42603
PROFESSIONAL ENGINEER
11-04-15

HDR
ARCHITECTURE | ENGINEERING & CONSULTING
1101 KING STREET
SUITE 400
ALEXANDRIA, VIRGINIA 22314
703-518-8500

APPROVED

FOR COMMANDER NAVFAC

ACTIVITY

SATISFACTORY TO DATE

DES MMM DRW NI CHK MWP

PM/DM CHEMENJU/HILL

BRANCH MANAGER N/A

CHIEF ENGIARCH TOM COX

DEPARTMENT OF THE NAVY
NAVAL FACILITIES ENGINEERING COMMAND
ATLANTIC

NAVAL FACILITIES ENGINEERING COMMAND
NAVFAC WASHINGTON
Walter reed National Military Medical center - Bethesda, Maryland

NSA/Bethesda

BETHESDA, MD

P125 - TEMPORARY MEDICAL FACILITIES
PACKAGE 2 - CLINIC BUILDING

GEOTECHNICAL - SOIL BORING PLAN

SCALE: 1" = 30'

EPROJECT NO.: 1151333

CONSTR. CONTR. NO. N62470-09-D-9044

NAVFAC DRAWING NO. 13065734

SHEET OF 0

B-101-V

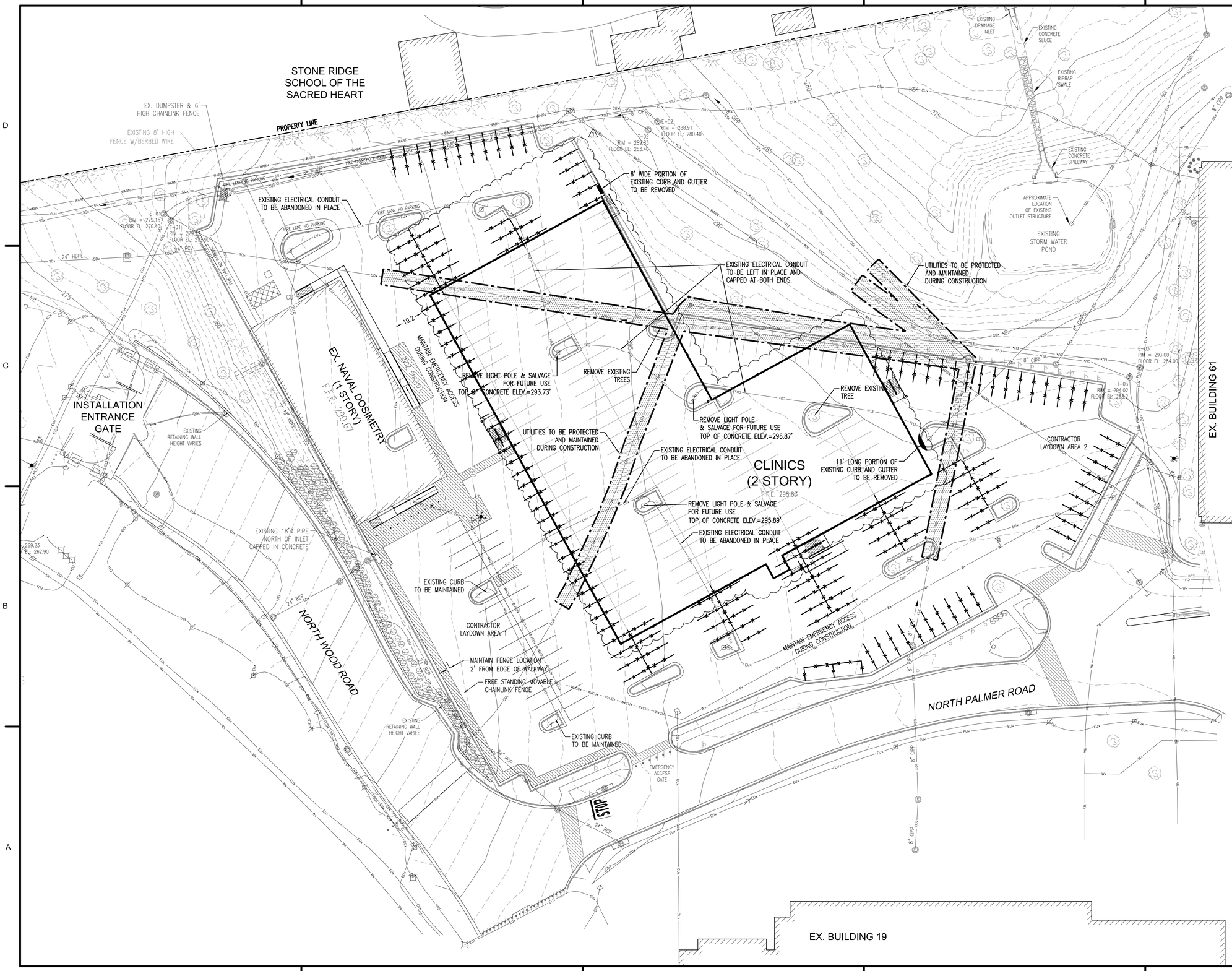

30' 20' 10' 0 30'
SCALE:1"= 30'-0"

N

LEGEND – EXISTING:

- 280 — EXISTING CONTOUR MAJOR
- EXISTING CONTOUR MINOR
- SSx — EXISTING STORM SEWER LINE
- EXISTING STORM SEWER MANHOLE
- SDx — EXISTING STORM DRAIN LINE
- EXISTING STORM DRAIN MANHOLE
- EXISTING STORM CATCH BASIN
- EUx — EXISTING ELECTRICAL CONDUIT
- EXISTING LIGHT POLE
- EXISTING ELECTRICAL MANHOLE
- EXISTING ELECTRICAL HAND HOLE
- CUx — EXISTING COMMUNICATION CONDUIT
- EXISTING COMMUNICATION MANHOLE
- EXISTING COMMUNICATION HAND HOLE
- Wx — EXISTING WATER LINE
- WABN — EXISTING ABANDONED WATER LINE
- EXISTING FIRE HYDRANT
- EXISTING WATER VALVE
- EXISTING CHAIN LINK FENCE
- EXISTING DECIDUOUS TREE
- EXISTING CONIFEROUS TREE
- EXISTING SHRUB
- EXISTING GATE POST
- EXISTING SIGN POST

DEMOLITION LEGEND:

- PORTION OF PARKING SPACE STRIPING PAINTED BLACK
- UTILITIES TO BE PROTECTED AND MAINTAINED DURING CONSTRUCTION

EXISTING SURVEY NOTES:

1. PLANIMETRIC AND TOPOGRAPHIC FEATURES SHOWN ARE TAKEN FROM AN ACTUAL FIELD SURVEY PERFORMED BY HDR IN DECEMBER 2012.

2. HORIZONTAL CONTROL SYSTEM BASED ON MARYLAND STATE PLANE NAD 83 FEET. VERTICAL CONTROL SYSTEM BASED ON NAVD 88 FEET.

3. PROPERTY LINE INFORMATION SHOWN HEREIN OBTAINED FROM SET OF PLANS TITLED "TRAFFIC MITIGATION MEASURES FOR GATES 1 AND 2" DATED AUGUST 15, 2011 PROVIDED BY NAVFAC.

4. UTILITY SURVEY FOR WATER, ELECTRICAL AND COMMUNICATION PROVIDED BY SO-DEEP UTILITY ENGINEERING COMPANY, 8397 EUCLID AVENUE, MANASSAS PARK, VA 20111, (703) 361-6005 AND DATED 1/22/2013. SEE SHEET C-101.

5. THE LOCATION OF UNDERGROUND UTILITIES ARE APPROXIMATE. CONTRACTOR TO FIELD VERIFY. ALL LOCATIONS ILLUSTRATED ARE BASED UPON ABOVE GROUND STRUCTURES THAT WERE VISIBLE AND ACCESSIBLE IN THE FIELD.

6. CONTRACTOR SHALL RESTORE EXISTING LIGHT FEATURES, CURB AND GUTTER, SIDEWALKS, PAVEMENTS AND ANY OTHER SITE FEATURES TO EXISTING CONDITIONS IF THEY ARE DAMAGED DURING CONSTRUCTION AND AT NO ADDITIONAL COST TO THE GOVERNMENT.

DEMOLITION NOTES:

1. CONTRACTOR SHALL PROTECT AND MAINTAIN ALL CURB AND GUTTER WITHIN THE PARKING LOT G, UNLESS OTHERWISE NOTED.

2. REMOVE EXISTING LIGHT POLE AND SALVAGE AS DIRECTED BY CONTRACTING OFFICER. LIGHT POLE BASE TO REMAIN FOR FUTURE USE.

SYM	DESCRIPTION	DATE
1	BID OPTION	11/4/15
	FINAL CORRECTED SET	3/26/14
	100% FINAL DESIGN SUBMISSION	2/3/14
	65% VE SUBMISSION	11/25/13
	65% SUBMITTAL	4/26/13
	35% SUBMITTAL	3/8/13
	20% SUBMITTAL	1/18/13

NAVFAC

STATE OF MARYLAND
MICHAEL W. PUCCI
No. 42609
PROFESSIONAL ENGINEER
11-04-15

HDR
ARCHITECTURE | ENGINEERING & CONSULTING
1101 KING STREET
SUITE 400
ALEXANDRIA, VIRGINIA 22314
703-518-8500

APPROVED
FOR COMMANDER NAVFAC
ACTIVITY
SATISFACTORY TO DATE

DES MMM DRW NI CHK MWP
PM/DM CHEMENJU/HILL
BRANCH MANAGER N/A
CHIEF ENGIARCH TOM COX

DEPARTMENT OF THE NAVY
NAVAL FACILITIES ENGINEERING COMMAND
ATLANTIC
NSA,Bethesda

NAVAL FACILITIES ENGINEERING COMMAND – NAVFAC WASHINGTON
Walter reed National Military Medical center - Bethesda, Maryland

BETHESDA, MD

P125 - TEMPORARY MEDICAL FACILITIES
PACKAGE 2 - CLINIC BUILDING

CIVIL - DEMOLITION PLAN

SCALE: 1" = 30'
EFPROJECT NO.: 1151333
CONTR. CONTR. NO.: N62470-09-D-9044
NAVFAC DRAWING NO.: 13065743
SHEET OF 0

CD-101-V

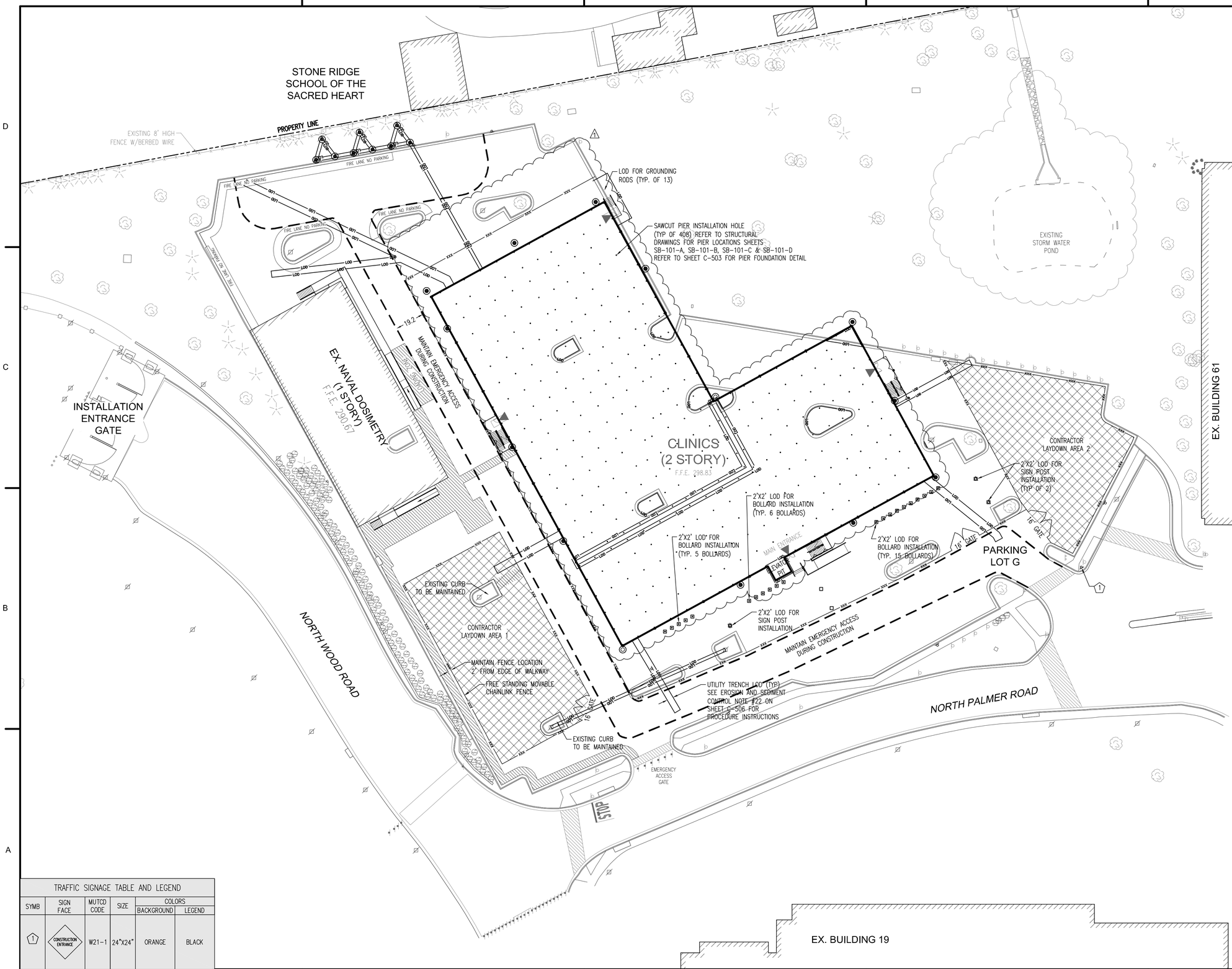

TRAFFIC SIGNAGE TABLE AND LEGEND					
SYMB	SIGN FACE	MUTCD CODE	SIZE	COLORS	
				BACKGROUND	LEGEND
1	CONSTRUCTION ENTRANCE	W21-1	24"X24"	ORANGE	BLACK

30' 20' 10' 0 30'
SCALE:1"= 30'-0"

LEGEND – EXISTING:

- EXISTING CHAIN LINK FENCE
- EXISTING DECIDUOUS TREE
- EXISTING CONIFEROUS TREE
- EXISTING SHRUB
- EXISTING GATE POST
- EXISTING SIGN POST
- EXISTING PEDESTRIAN STRIPING WALKWAY

LEGEND – PROPOSED:

- LOD — LIMIT OF DISTURBANCE
- XXX — FREE STANDING MOVABLE CHAINLINK FENCE

EXISTING SURVEY NOTES:

1. PLANIMETRIC AND TOPOGRAPHIC FEATURES SHOWN ARE TAKEN FROM AN ACTUAL FIELD SURVEY PERFORMED BY HDR IN DECEMBER 2012.

2. HORIZONTAL CONTROL SYSTEM BASED ON MARYLAND STATE PLANE NAD 83 FEET. VERTICAL CONTROL SYSTEM BASED ON NAVD 88 FEET.

3. PROPERTY LINE INFORMATION SHOWN HEREIN OBTAINED FROM SET OF PLANS TITLED "TRAFFIC MITIGATION MEASURES FOR GATES 1 AND 2" DATED AUGUST 15, 2011 PROVIDED BY NAVFAC.

4. UTILITY SURVEY FOR WATER, ELECTRICAL AND COMMUNICATION PROVIDED BY SO-DEEP UTILITY ENGINEERING COMPANY, 8397 EUCLID AVENUE, MANASSAS PARK, VA 20111, (703) 361-6005 AND DATED 1/22/2013. SEE SHEET C-101.

5. THE LOCATION OF UNDERGROUND UTILITIES ARE APPROXIMATE. CONTRACTOR TO FIELD VERIFY. ALL LOCATIONS ILLUSTRATED ARE BASED UPON ABOVE GROUND STRUCTURES THAT WERE VISIBLE AND ACCESSIBLE IN THE FIELD.

6. THERE SHALL BE NO EARTH DISTURBANCE OR STOCKPILING OF ERODABLE MATERIAL IN STAGING AREA OUTSIDE OF LOD.

STAGING NOTES:

1. CONTRACTOR LAYDOWN AREA 1 WILL ONLY BE AVAILABLE AFTER COMPLETION OF PACKAGE 1 CONSTRUCTION.

2. THE CONTRACTOR SHALL MAINTAIN VEHICLE ACCESS TO EXISTING DOSIMETRY BUILDING FOR EMERGENCIES AND DELIVERIES AT ALL TIMES DURING CONSTRUCTION.

3. THE CONTRACTOR SHALL MAINTAIN IN SAFE AND UNOBSTRUCTED CONDITIONS THE EXISTING PEDESTRIAN ACCESS TO THE EXISTING DOSIMETRY BUILDING AT ALL TIMES.

4. ALL PROPOSED ROAD CLOSURES AND DETOURS SHALL BE COORDINATED WITH THE BASE COMMANDER (OR OTHER DULY APPOINTED CONTRACTING OFFICER).

ARCHITECTURAL NOTES:

1. REFER TO A-101 SHEETS (ARCHITECTURAL PLANS) FOR THE DIMENSIONS OF RAMPS AND STAIRS.

SYM	DESCRIPTION	DATE
1	BID OPTION	11/4/15
	FINAL CORRECTED SET	3/26/14
	100% FINAL DESIGN SUBMISSION	2/3/14
	65% VE SUBMISSION	11/25/13
	65% SUBMITTAL	4/26/13
	35% SUBMITTAL	3/8/13
	20% SUBMITTAL	1/18/13

NAVFAC

STATE OF MARYLAND
MICHAEL W. PUCCI
No. 42603
PROFESSIONAL ENGINEER
11-04-15

HDR
ARCHITECTURE | ENGINEERING & CONSULTING
1101 KING STREET
SUITE 400
ALEXANDRIA, VIRGINIA 22314
703-518-8500

APPROVED
FOR COMMANDER NAVFAC
ACTIVITY
SATISFACTORY TO DATE

DES	MMM	DRW	NI
CHK	MWP	PM/DM	CHEMENJU/HILL
BRANCH MANAGER	N/A		
CHIEF ENGIARCH	TOM COX		

DEPARTMENT OF THE NAVY
NAVAL FACILITIES ENGINEERING COMMAND
ATLANTIC
NSA/Bethesda

NAVAL FACILITIES ENGINEERING COMMAND ~ NAVFAC WASHINGTON
Walter reed National Military Medical center - Bethesda, Maryland
BETHESDA, MD

P125 - TEMPORARY MEDICAL FACILITIES
PACKAGE 2 - CLINIC BUILDING

CIVIL - STAGING PLAN

SCALE: 1" = 30'
EPROJECT NO.: 1151333
CONSTR. CONTR. NO.: N62470-09-D-9044
NAVFAC DRAWING NO.: 13065744
SHEET 0 OF 0

CS-101-V

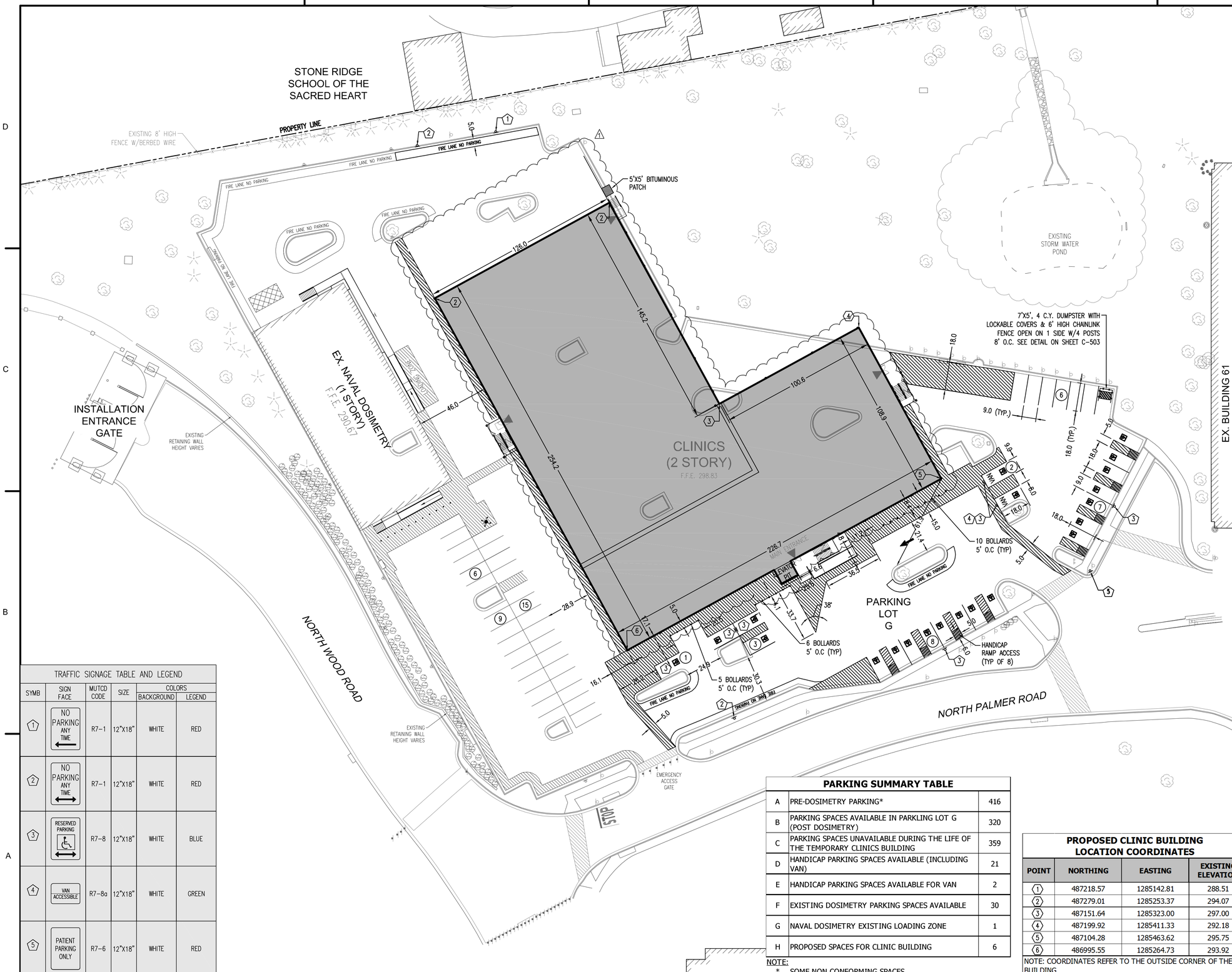

LEGEND – EXISTING:

- EXISTING CHAIN LINK FENCE
- EXISTING DECIDUOUS TREE
- EXISTING CONIFEROUS TREE
- EXISTING SHRUB
- EXISTING GATE POST
- EXISTING SIGN POST
- EXISTING PEDESTRIAN STRIPING WALKWAY

LEGEND – PROPOSED:

- BUILDING ENTRANCE/EXIT
- BUILDING RAMP
- PEDESTRIAN STRIPING WALKWAY

EXISTING SURVEY NOTES:

1. PLANIMETRIC AND TOPOGRAPHIC FEATURES SHOWN ARE TAKEN FROM AN ACTUAL FIELD SURVEY PERFORMED BY HDR IN DECEMBER 2012.

2. HORIZONTAL CONTROL SYSTEM BASED ON MARYLAND STATE PLANE NAD 83 FEET. VERTICAL CONTROL SYSTEM BASED ON NAVD 88 FEET.

3. PROPERTY LINE INFORMATION SHOWN HEREIN OBTAINED FROM SET OF PLANS TITLED "TRAFFIC MITIGATION MEASURES FOR GATES 1 AND 2" DATED AUGUST 15, 2011 PROVIDED BY NAVFAC.

4. UTILITY SURVEY FOR WATER, ELECTRICAL AND COMMUNICATION PROVIDED BY SO-DEEP UTILITY ENGINEERING COMPANY, 8397 EUCLID AVENUE, MANASSAS PARK, VA 20111, (703) 361-6005 AND DATED 1/22/2013. SEE SHEET C-101.

5. THE LOCATION OF UNDERGROUND UTILITIES ARE APPROXIMATE. CONTRACTOR TO FIELD VERIFY. ALL LOCATIONS ILLUSTRATED ARE BASED UPON ABOVE GROUND STRUCTURES THAT WERE VISIBLE AND ACCESSIBLE IN THE FIELD.

SITE LAYOUT NOTES:

1. ASPHALT FOR THE REPAIR OF THE ROADS OR PARKING LOT SHOULD MATCH EXISTING. ALL MATERIALS AND INSTALLATION SHALL BE PER MDOT STANDARDS AND SPECIFICATIONS.

ARCHITECTURAL NOTES:

1. REFER TO A-101 SHEETS (ARCHITECTURAL PLANS) FOR THE DIMENSIONS OF RAMPS AND STAIRS.

TRAFFIC SIGNAGE TABLE AND LEGEND

SYMB	SIGN FACE	MUTCD CODE	SIZE	COLORS BACKGROUND	COLORS LEGEND
1	NO PARKING ANY TIME	R7-1	12"X18"	WHITE	RED
2	NO PARKING ANY TIME	R7-1	12"X18"	WHITE	RED
3	RESERVED PARKING	R7-8	12"X18"	WHITE	BLUE
4	VAN ACCESSIBLE	R7-8a	12"X18"	WHITE	GREEN
5	PATIENT PARKING ONLY	R7-6	12"X18"	WHITE	RED

PARKING SUMMARY TABLE

A	PRE-DOSIMETRY PARKING*	416
B	PARKING SPACES AVAILABLE IN PARKLING LOT G (POST DOSIMETRY)	320
C	PARKING SPACES UNAVAILABLE DURING THE LIFE OF THE TEMPORARY CLINICS BUILDING	359
D	HANDICAP PARKING SPACES AVAILABLE (INCLUDING VAN)	21
E	HANDICAP PARKING SPACES AVAILABLE FOR VAN	2
F	EXISTING DOSIMETRY PARKING SPACES AVAILABLE	30
G	NAVAL DOSIMETRY EXISTING LOADING ZONE	1
H	PROPOSED SPACES FOR CLINIC BUILDING	6

NOTE:
* SOME NON CONFORMING SPACES

PROPOSED CLINIC BUILDING LOCATION COORDINATES

POINT	NORTHING	EASTING	EXISTING ELEVATION
1	487218.57	1285142.81	288.51
2	487279.01	1285253.37	294.07
3	487151.64	1285323.00	297.00
4	487199.92	1285411.33	292.18
5	487104.28	1285463.62	295.75
6	486995.55	1285264.73	293.92

NOTE: COORDINATES REFER TO THE OUTSIDE CORNER OF THE BUILDING

SYM	DESCRIPTION	DATE
1	BID OPTION	11/4/15
	FINAL CORRECTED SET	3/26/14
	100% FINAL DESIGN SUBMISSION	2/3/14
	65% VE SUBMISSION	11/25/13
	65% SUBMITTAL	4/26/13
	35% SUBMITTAL	3/8/13
	20% SUBMITTAL	1/18/13

NAVFAC

STATE OF MARYLAND MICHAEL W. PUCCI No. 42603 PROFESSIONAL ENGINEER
11-04-15

HDR
ARCHITECTURE | ENGINEERING & CONSULTING
1101 KING STREET
SUITE 400
ALEXANDRIA, VIRGINIA 22314
703-518-8500

APPROVED
FOR COMMANDER NAVFAC
ACTIVITY
SATISFACTORY TO DATE

DES MMM DRW NI CHK MWP
PM/DM CHEMENJU/HILL
BRANCH MANAGER N/A
CHIEF ENG/ARCH TOM COX

DEPARTMENT OF THE NAVY
NAVAL FACILITIES ENGINEERING COMMAND
ATLANTIC
NSA/Bethesda

NAVAL FACILITIES ENGINEERING COMMAND – NAVFAC WASHINGTON
Walter reed National Military Medical center - Bethesda, Maryland

BETHESDA, MD

P125 - TEMPORARY MEDICAL FACILITIES
PACKAGE 2 - CLINIC BUILDING

CIVIL - SITE LAYOUT, STRIPING AND SIGNAGE PLAN

SCALE: 1" = 30'
EPROJECT NO.: 1151333
CONSTR. CONTR. NO. N62470-09-D-9044
NAVFAC DRAWING NO. 13065745
SHEET OF 0
CS-102-V

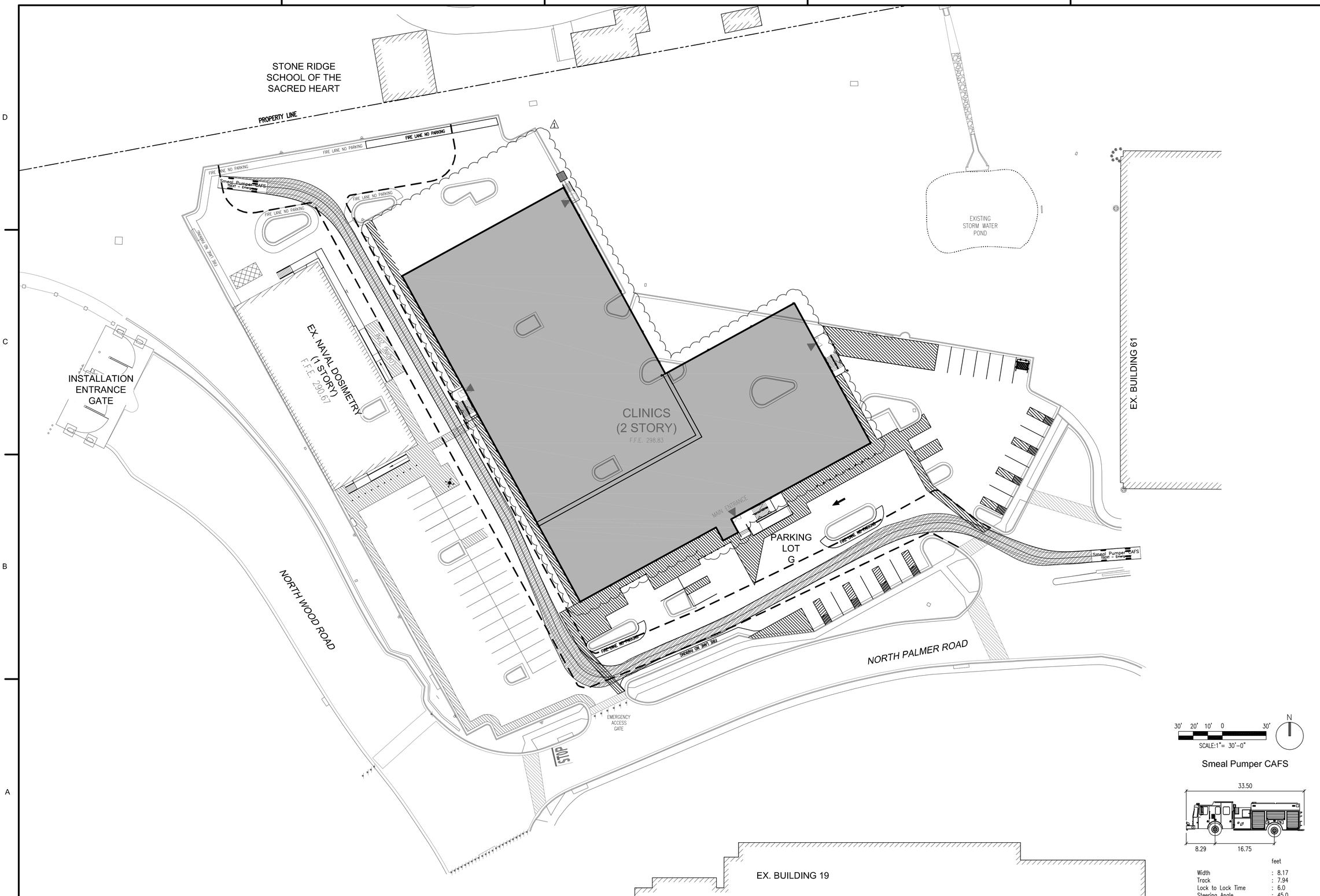

SYM	DESCRIPTION	DATE
1	BID OPTION	11/4/15
	FINAL CORRECTED SET	3/26/14
	100% FINAL DESIGN SUBMISSION	2/3/14
	65% VE SUBMISSION	11/25/13

NAVFAC

STATE OF MARYLAND
MICHAEL W. PUCCI
No. 42603
PROFESSIONAL ENGINEER
11-04-15

HDR
ARCHITECTURE | ENGINEERING & CONSULTING
1101 KING STREET
SUITE 400
ALEXANDRIA, VIRGINIA 22314
703-518-8500

APPROVED
FOR COMMANDER NAVFAC
ACTIVITY
SATISFACTORY TO DATE

DES MMM DRW NI CHK MWP
PM/DM CHEMENJU/HILL
BRANCH MANAGER N/A
CHIEF ENGARCH TOM COX

DEPARTMENT OF THE NAVY
NAVAL FACILITIES ENGINEERING COMMAND
ATLANTIC
NAVAL FACILITIES ENGINEERING COMMAND ~ NAVFAC WASHINGTON
Walter reed National Military Medical center - Bethesda, Maryland
NSA/Bethesda
BETHESDA, MD
P125 - TEMPORARY MEDICAL FACILITIES
PACKAGE 2 - CLINIC BUILDING
CIVIL - AUTOTURN SIMULATION ANALYSIS

SCALE: 1" = 30'
EPROJECT NO.: 1151333
CONSTR. CONTR. NO. N62470-09-D-9044
NAVFAC DRAWING NO. 13065746
SHEET OF 0

CS-103-V

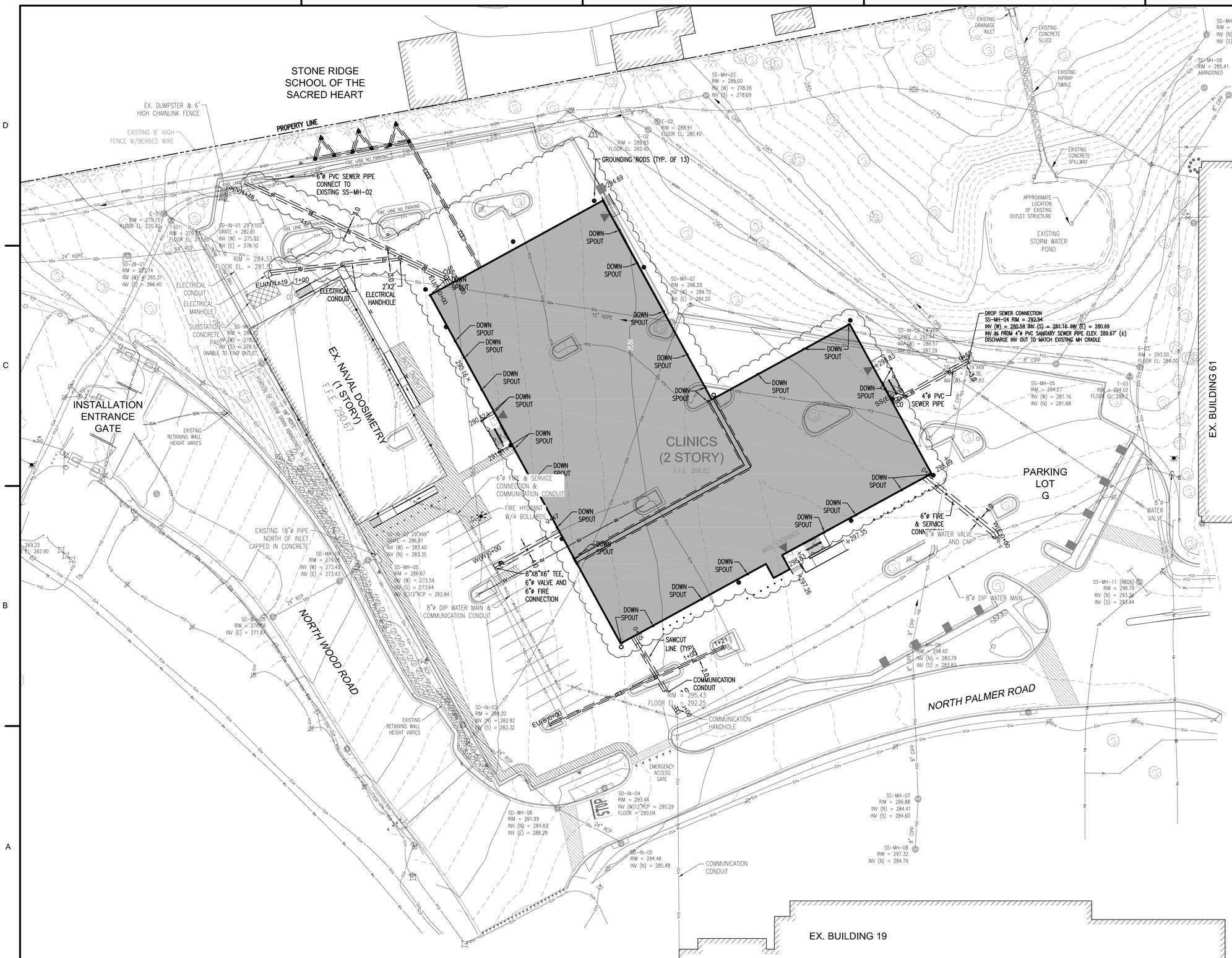

SYM	DESCRIPTION	DATE
1	BID OPTION	11/4/15
	FINAL CORRECTED SET	3/26/14
	100% FINAL DESIGN SUBMISSION	2/3/14
	65% VE SUBMISSION	11/25/13
	65% SUBMITTAL	4/26/13
	35% SUBMITTAL	3/8/13
	20% SUBMITTAL	1/18/13

LEGEND – EXISTING:

- EXISTING CONTOUR MAJOR
- EXISTING STORM SEWER LINE
- EXISTING STORM SEWER MANHOLE
- EXISTING STORM DRAIN LINE
- EXISTING STORM DRAIN MANHOLE
- EXISTING STORM CATCH BASIN
- EXISTING ELECTRICAL CONDUIT
- EXISTING LIGHT POLE
- EXISTING ELECTRICAL MANHOLE
- EXISTING ELECTRICAL HAND HOLE
- EXISTING COMMUNICATION CONDUIT
- EXISTING COMMUNICATION MANHOLE
- EXISTING COMMUNICATION HAND HOLE
- EXISTING WATER LINE
- EXISTING ABANDONED WATER LINE
- EXISTING FIRE HYDRANT
- EXISTING WATER VALVE
- EXISTING CHAIN LINK FENCE
- EXISTING DECIDUOUS TREE
- EXISTING CONIFEROUS TREE
- EXISTING SHRUB
- EXISTING GATE POST
- EXISTING SIGN POST

LEGEND – PROPOSED:

- SANITARY SEWER LINE
- ELECTRICAL CONDUIT
- COMMUNICATION CONDUIT
- WATER LINE
- BUILDING ENTRANCE/EXIT

EXISTING SURVEY NOTES:

1. PLANIMETRIC AND TOPOGRAPHIC FEATURES SHOWN ARE TAKEN FROM AN ACTUAL FIELD SURVEY PERFORMED BY HDR IN DECEMBER 2012.

2. HORIZONTAL CONTROL SYSTEM BASED ON MARYLAND STATE PLANE NAD 83 FEET. VERTICAL CONTROL SYSTEM BASED ON NAVD 88 FEET.

3. PROPERTY LINE INFORMATION SHOWN HEREIN OBTAINED FROM SET OF PLANS TITLED "TRAFFIC MITIGATION MEASURES FOR GATES 1 AND 2" DATED AUGUST 15, 2011 PROVIDED BY NAVFAC.

4. UTILITY SURVEY FOR WATER, ELECTRICAL AND COMMUNICATION PROVIDED BY SO-DEEP UTILITY ENGINEERING COMPANY, 8397 EUCLID AVENUE, MANASSAS PARK, VA 20111, (703) 361-6005 AND DATED 1/22/2013. SEE SHEET C-101.

5. THE LOCATION OF UNDERGROUND UTILITIES ARE APPROXIMATE. CONTRACTOR TO FIELD VERIFY. ALL LOCATIONS ILLUSTRATED ARE BASED UPON ABOVE GROUND STRUCTURES THAT WERE VISIBLE AND ACCESSIBLE IN THE FIELD.

6. CONTRACTOR TO FILED VERIFY DEPTHS OF EXISTING ELECTRICAL CONDUITS AND/OR CABLES.

7. IN CASE OF CONFLICTS BETWEEN PROPOSED UTILITIES AND EXISTING ELECTRICAL AND TELECOM LINES, EXISTING ELECTRICAL AND TELECOM LINES SHOULD BE LOWERED TO HAVE A MINIMUM OF 1 FT. VERTICAL CLEARANCE TO PROPOSED UTILITIES. THIS WORK SHALL NOT BE AT ANY EXPENSE TO THE CONTRACTOR.

UTILITIES PLAN NOTES:

1. ASPHALT FOR THE REPAIR OF THE ROADS OR PARKING LOT SHALL MATCH EXISTING. ALL MATERIALS AND INSTALLATION SHALL BE PER MDOT STANDARDS AND SPECIFICATIONS.

2. REFER TO ARCHITECTURAL SHEETS A-522 AND A-524 FOR DOWNSPOUT AND BOOT DETAILS.

NAVFAC

STATE OF MARYLAND MICHAEL W. PUCKETT No. 42603 PROFESSIONAL ENGINEER
11-04-15

HDR
ARCHITECTURE | ENGINEERING & CONSULTING
1101 KING STREET
SUITE 400
ALEXANDRIA, VIRGINIA 22314
703-518-8500

APPROVED
FOR COMMANDER NAVFAC
ACTIVITY
SATISFACTORY TO DATE
DES. MMM DRW. NI CHK. MWP
PM/DM CHEMENJU/HILL
BRANCH MANAGER N/A
CHIEF ENGR/CH TOM COX

DEPARTMENT OF THE NAVY
NAVAL FACILITIES ENGINEERING COMMAND
ATLANTIC
NSA/Bethesda

NAVAL FACILITIES ENGINEERING COMMAND ~ NAVFAC WASHINGTON
Walter reed National Military Medical center - Bethesda, Maryland

BETHESDA, MD
P125 - TEMPORARY MEDICAL FACILITIES
PACKAGE 2 - CLINIC BUILDING

CIVIL - UTILITIES SITE PLAN

SCALE: 1" = 30'
EPROJECT NO.: 1151333
CONSTR. CONTR. NO. N62470-09-D-9044
NAVFAC DRAWING NO. 13065747
SHEET OF 0

CU-101-V

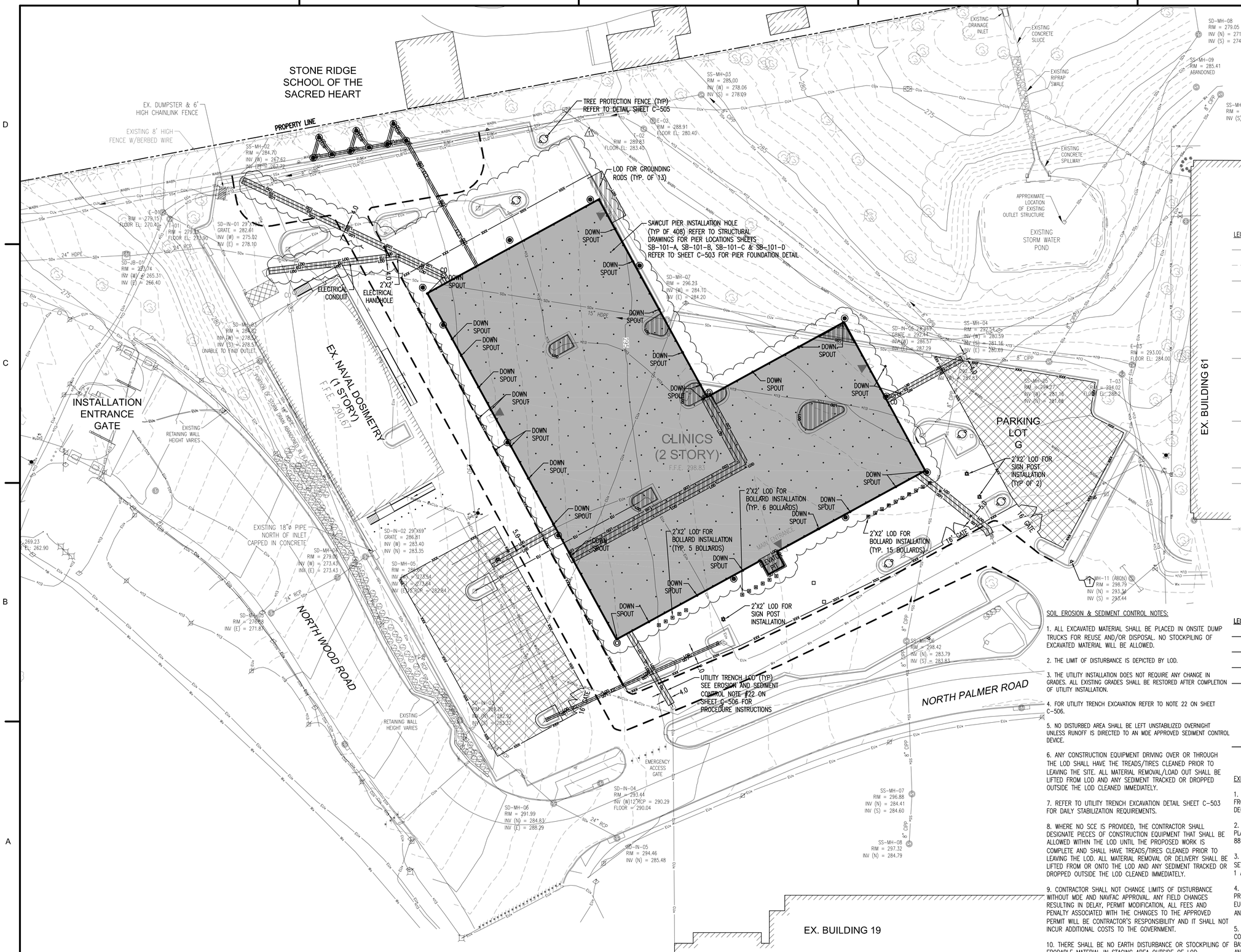

LEGEND – EXISTING:

- EXISTING CONTOUR MAJOR
- EXISTING CONTOUR MINOR
- EXISTING STORM SEWER LINE
- EXISTING STORM SEWER MANHOLE
- EXISTING STORM DRAIN LINE
- EXISTING STORM DRAIN MANHOLE
- EXISTING STORM CATCH BASIN
- EXISTING ELECTRICAL CONDUIT
- EXISTING LIGHT POLE
- EXISTING ELECTRICAL MANHOLE
- EXISTING ELECTRICAL HAND HOLE
- EXISTING COMMUNICATION CONDUIT
- EXISTING COMMUNICATION MANHOLE
- EXISTING COMMUNICATION HAND HOLE
- EXISTING WATER LINE
- EXISTING ABANDONED WATER LINE
- EXISTING FIRE HYDRANT
- EXISTING WATER VALVE
- EXISTING CHAIN LINK FENCE
- EXISTING DECIDUOUS TREE
- EXISTING CONIFEROUS TREE
- EXISTING SHRUB
- EXISTING GATE POST
- EXISTING SIGN POST

LEGEND – PROPOSED:

- SANITARY SEWER LINE
- ELECTRICAL CONDUIT
- COMMUNICATION CONDUIT
- WATER LINE
- BUILDING ENTRANCE/EXIT
- BUILDING RAMP
- TREE PROTECTION FENCE
- LIMIT OF DISTURBANCE
- SAME DAY LOD STABILIZATION

SOIL EROSION & SEDIMENT CONTROL NOTES:

1. ALL EXCAVATED MATERIAL SHALL BE PLACED IN ONSITE DUMP TRUCKS FOR REUSE AND/OR DISPOSAL. NO STOCKPILING OF EXCAVATED MATERIAL WILL BE ALLOWED.

2. THE LIMIT OF DISTURBANCE IS DEPICTED BY LOD.

3. THE UTILITY INSTALLATION DOES NOT REQUIRE ANY CHANGE IN GRADES. ALL EXISTING GRADES SHALL BE RESTORED AFTER COMPLETION OF UTILITY INSTALLATION.

4. FOR UTILITY TRENCH EXCAVATION REFER TO NOTE 22 ON SHEET C-506.

5. NO DISTURBED AREA SHALL BE LEFT UNSTABILIZED OVERNIGHT UNLESS RUNOFF IS DIRECTED TO AN MDE APPROVED SEDIMENT CONTROL DEVICE.

6. ANY CONSTRUCTION EQUIPMENT DRIVING OVER OR THROUGH THE LOD SHALL HAVE THE TREADS/TIRES CLEANED PRIOR TO LEAVING THE SITE. ALL MATERIAL REMOVAL/LOAD OUT SHALL BE LIFTED FROM LOD AND ANY SEDIMENT TRACKED OR DROPPED OUTSIDE THE LOD CLEANED IMMEDIATELY.

7. REFER TO UTILITY TRENCH EXCAVATION DETAIL SHEET C-503 FOR DAILY STABILIZATION REQUIREMENTS.

8. WHERE NO SCE IS PROVIDED, THE CONTRACTOR SHALL DESIGNATE PIECES OF CONSTRUCTION EQUIPMENT THAT SHALL BE ALLOWED WITHIN THE LOD UNTIL THE PROPOSED WORK IS COMPLETE AND SHALL HAVE TREADS/TIRES CLEANED PRIOR TO LEAVING THE LOD. ALL MATERIAL REMOVAL OR DELIVERY SHALL BE LIFTED FROM OR ONTO THE LOD AND ANY SEDIMENT TRACKED OR DROPPED OUTSIDE THE LOD CLEANED IMMEDIATELY.

9. CONTRACTOR SHALL NOT CHANGE LIMITS OF DISTURBANCE WITHOUT MDE AND NAVFAC APPROVAL. ANY FIELD CHANGES RESULTING IN DELAY, PERMIT MODIFICATION, ALL FEES AND PENALTY ASSOCIATED WITH THE CHANGES TO THE APPROVED PERMIT WILL BE CONTRACTOR'S RESPONSIBILITY AND IT SHALL NOT INCUR ADDITIONAL COSTS TO THE GOVERNMENT.

10. THERE SHALL BE NO EARTH DISTURBANCE OR STOCKPILING OF ERODABLE MATERIAL IN STAGING AREA OUTSIDE OF LOD.

EXISTING SURVEY NOTES:

1. PLANIMETRIC AND TOPOGRAPHIC FEATURES SHOWN ARE TAKEN FROM AN ACTUAL FIELD SURVEY PERFORMED BY HDR IN DECEMBER 2012.

2. HORIZONTAL CONTROL SYSTEM BASED ON MARYLAND STATE PLANE NAD 83 FEET. VERTICAL CONTROL SYSTEM BASED ON NAVD 88 FEET.

3. PROPERTY LINE INFORMATION SHOWN HEREIN OBTAINED FROM SET OF PLANS TITLED "TRAFFIC MITIGATION MEASURES FOR GATES 1 AND 2" DATED AUGUST 15, 2011 PROVIDED BY NAVFAC.

4. UTILITY SURVEY FOR WATER, ELECTRICAL AND COMMUNICATION PROVIDED BY SO-DEEP UTILITY ENGINEERING COMPANY, 8397 EUCLID AVENUE, MANASSAS PARK, VA 20111, (703) 361-6005 AND DATED 1/22/2013. SEE SHEET C-101.

5. THE LOCATION OF UNDERGROUND UTILITIES ARE APPROXIMATE. CONTRACTOR TO FIELD VERIFY. ALL LOCATIONS ILLUSTRATED ARE BASED UPON ABOVE GROUND STRUCTURES THAT WERE VISIBLE AND ACCESSIBLE IN THE FIELD.

SYM	DESCRIPTION	DATE
1	BID OPTION	11/4/15
	FINAL CORRECTED SET	3/26/14
	100% FINAL DESIGN SUBMISSION	2/3/14
	65% VE SUBMISSION	11/25/13
	65% SUBMITTAL	4/26/13
	35% SUBMITTAL	3/8/13
	20% SUBMITTAL	1/18/13

NAVFAC

STATE OF MARYLAND MICHAEL W. PUCCI No. 42603 PROFESSIONAL ENGINEER
11-04-15

HDR
ARCHITECTURE | ENGINEERING & CONSULTING
1101 KING STREET
SUITE 400
ALEXANDRIA, VIRGINIA 22314
703-518-8500

APPROVED
FOR COMMANDER NAVFAC
ACTIVITY
SATISFACTORY TO DATE
DES MMM DRW NI CHK MWP
PM/DM CHEMENJU/HILL
BRANCH MANAGER N/A
CHIEF ENGARCH TOM COX

DEPARTMENT OF THE NAVY
NAVAL FACILITIES ENGINEERING COMMAND
ATLANTIC
NAVAL FACILITIES ENGINEERING COMMAND ~ NAVFAC WASHINGTON
Walter reed National Military Medical center - Bethesda, Maryland
NSA/Bethesda
BETHESDA, MD
P125 - TEMPORARY MEDICAL FACILITIES
PACKAGE 2 - CLINIC BUILDING
CIVIL - SOIL EROSION AND SEDIMENT CONTROL PLAN

SCALE: 1" = 30'
EPROJECT NO.: 1151333
CONSTR. CONTR. NO. N62470-09-D-9044
NAVFAC DRAWING NO. 13065748
SHEET OF 0
CG-101-V

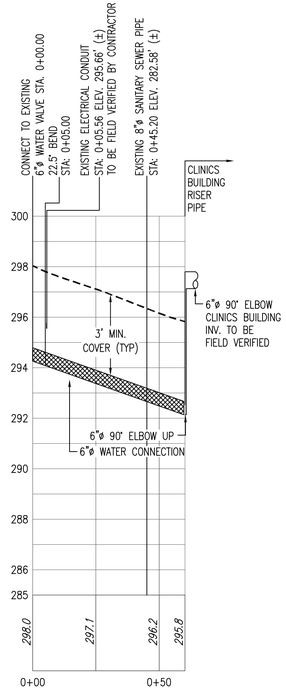

6"ø FIRE WATER MAIN PROFILE (EAST)

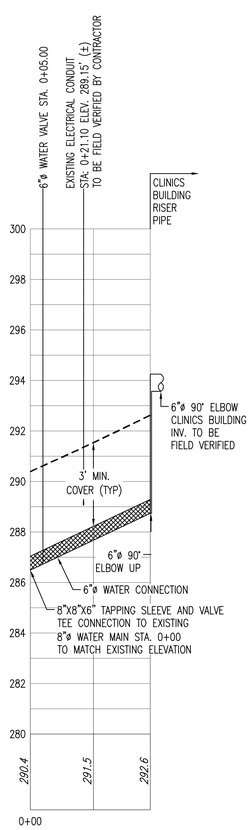

6"ø FIRE & SERVICE WATER MAIN PROFILE (WEST)

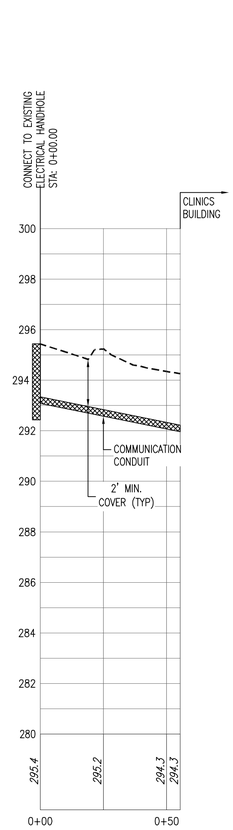

COMMUNICATION CONDUIT PROFILE

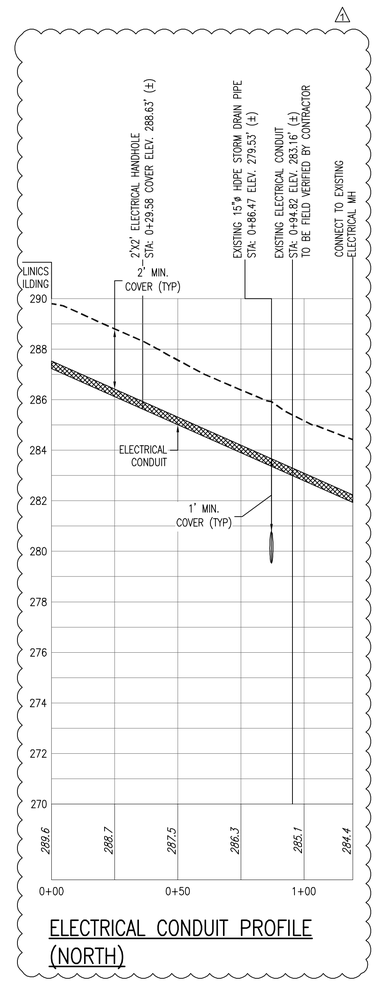

ELECTRICAL CONDUIT PROFILE (NORTH)

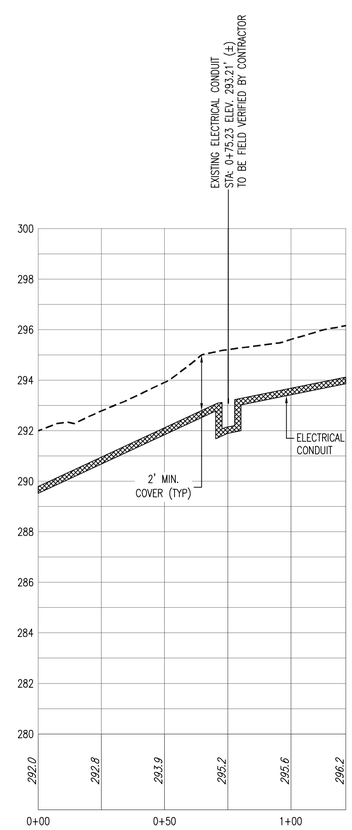

ELECTRICAL CONDUIT PROFILE (SOUTH)

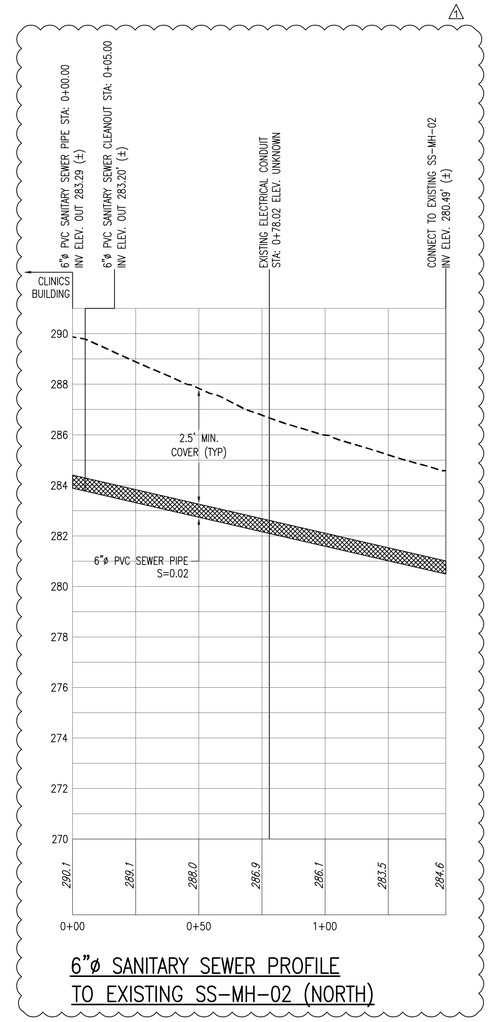

6"ø SANITARY SEWER PROFILE TO EXISTING SS-MH-02 (NORTH)

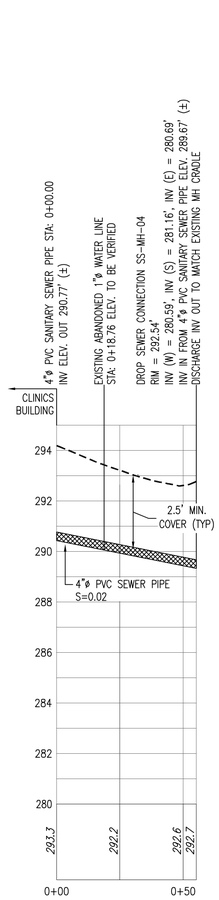

4"ø SANITARY SEWER PROFILE TO EXISTING SS-MH-04 (EAST)

LEGEND:

- - - - - EXISTING SURFACE

293.3 EXISTING ELEVATION AT STATION

1+00 SECTION STATIONING (FEET)

NOTES:

1. STATIONING, ELEVATIONS AND DISTANCES SHOULD BE CONSIDERED APPROXIMATE.

2. PROPOSED ELECTRICAL CONDUIT SHALL HAVE A VERTICAL CLEARANCE OF 1 FOOT BELOW EXISTING UTILITIES.

3. IN CASE OF CONFLICT BETWEEN EXISTING ABANDONED WATER LINE AND PROPOSED 4"ø SEWER PIPE, THE WATER LINE SHALL BE CUT AND CAP AT THE TRENCH LINITS.

4. ALL WATER PIPES SHOWN ON THIS SHEET ARE DUCTILE IRON CLASS 53.

5. ALL SEWER PIPES SHOWN ON THIS SHEET ARE PVC SDR 35.

6. ALL ELECTRIC AND TELECOMMUNICATION CONDUITS SHOWN ON THIS SHEET ARE PVC SCHEDULE 80.

3' 2' 1' 0 3'
VERTICAL SCALE:1"= 3'-0"

30' 20' 10' 0 30'
HORIZONTAL SCALE:1"= 30'-0"

SYM	DESCRIPTION	DATE
1	BID OPTION	11/4/15
	FINAL CORRECTED SET	3/26/14
	100% FINAL DESIGN SUBMISSION	2/3/14
	65% VE SUBMISSION	11/25/13
	65% SUBMITTAL	4/26/13
	35% SUBMITTAL	3/8/13
	20% SUBMITTAL	1/18/13

NAVFAC

STATE OF MARYLAND MICHAEL W. PUCCI No. 42603 PROFESSIONAL ENGINEER
11-04-15

HDR
ARCHITECTURE | ENGINEERING & CONSULTING
1101 KING STREET
SUITE 400
ALEXANDRIA, VIRGINIA 22314
703-518-8500

APPROVED
FOR COMMANDER NAVFAC
ACTIVITY
SATISFACTORY TO DATE

DES MMM DRW NI CHK MWP
PM/DM CHEMENJU/HILL
BRANCH MANAGER N/A
CHIEF ENG/ARCH TOM COX

DEPARTMENT OF THE NAVY
NAVAL FACILITIES ENGINEERING COMMAND
ATLANTIC
NSA/Bethesda

NAVAL FACILITIES ENGINEERING COMMAND ~ NAVFAC WASHINGTON
Walter reed National Military Medical center - Bethesda, Maryland

BETHESDA, MD

P125 - TEMPORARY MEDICAL FACILITIES
PACKAGE 2 - CLINIC BUILDING

CIVIL - UTILITIES PROFILES

SCALE: AS SHOWN
EPROJECT NO.: 1151333
CONSTR. CONTR. NO. N62470-09-D-9044
NAVFAC DRAWING NO. 13065752
SHEET OF 0

CU-301-V

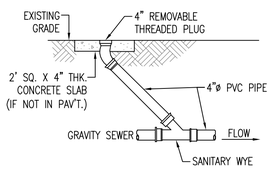

SANITARY SEWER CLEANOUT DETAIL

SCALE: NOT TO SCALE

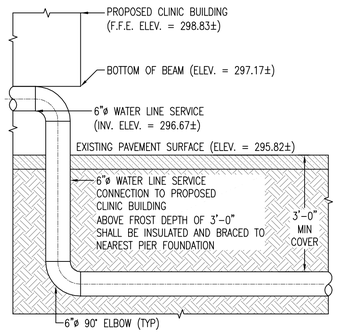

6"ø FIRE WATER MAIN BUILDING CONNECTION DETAIL (EAST)

SCALE: NOT TO SCALE

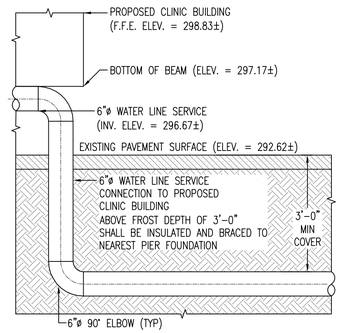

6"ø FIRE & SERVICE WATER MAIN BUILDING CONNECTION DETAIL (WEST)

SCALE: NOT TO SCALE

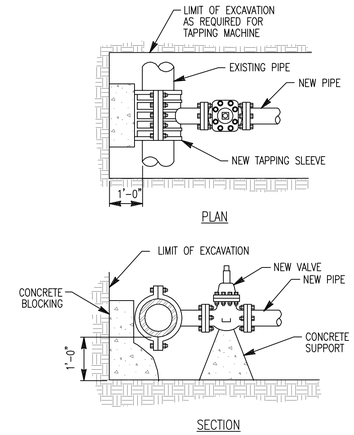

INSTALLATION DETAIL TAPPING SLEEVE AND VALVE

SCALE: NOT TO SCALE

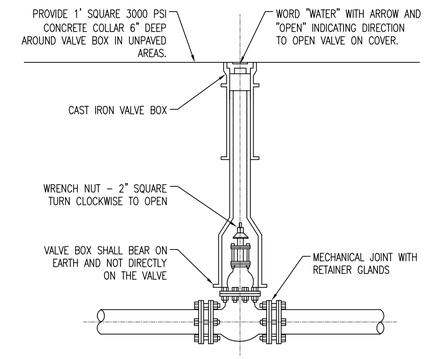

GATE VALVE INSTALLATION DETAIL

SCALE: NOT TO SCALE

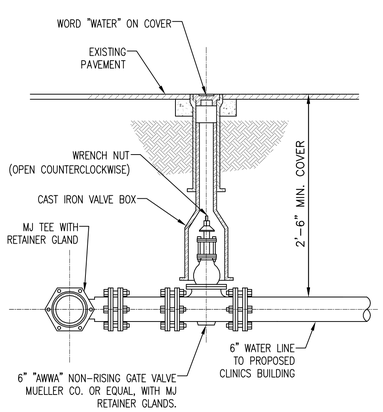

WATER MAIN CONNECTION DETAIL (TO CLINICS BUILDING)

SCALE: NOT TO SCALE

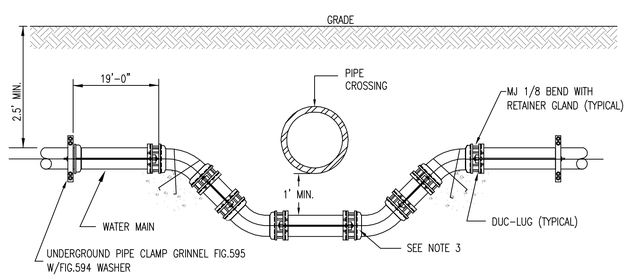

NOTES:

1. RETAINER GLANDS REQUIRED ONLY IN CONJUNCTION WITH CLDI PIPE
2. WATER LINES SHALL PASS 2 FEET ABOVE SEWER LINES.
3. ANY PIPE JOINT WITHIN 3 FEET OF WATER MAIN SHALL BE CONCRETE ENCASED 6" ALL AROUND PIPE 1' EITHER SIDE OF JOINT.

TYPICAL WATER OFFSET UNDER UTILITY DETAIL

SCALE: NOT TO SCALE

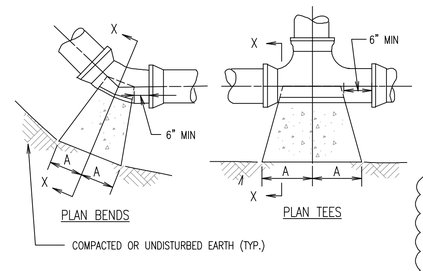

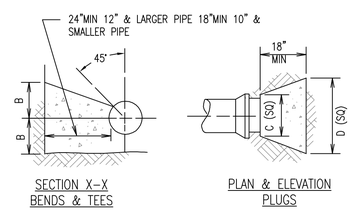

NOTES:

1. ALL CONCRETE MUST BE @ 3000 psi.

SIZE	1/4 BENDS		1/8 BENDS		1/16 BENDS		TEES		PLUGS	
	A	B	A	B	A	B	A	B	C	D
6"	16"	10"	9"	10"	6"	8"	10"	12"	10"	21"
8"	22"	13"	12"	13"	8"	10"	13"	16"	12"	29"
10"	26"	17"	14"	17"	10"	13"	16"	20"	14"	36"
12"	29"	21"	16"	21"	11"	16"	18"	24"	16"	41"
14"	35"	24"	19"	24"	12"	20"	22"	27"	18"	48"
16"	38"	27"	21"	27"	12"	24"	24"	30"	20"	54"

THRUST BLOCKS DETAILS

SCALE: NOT TO SCALE

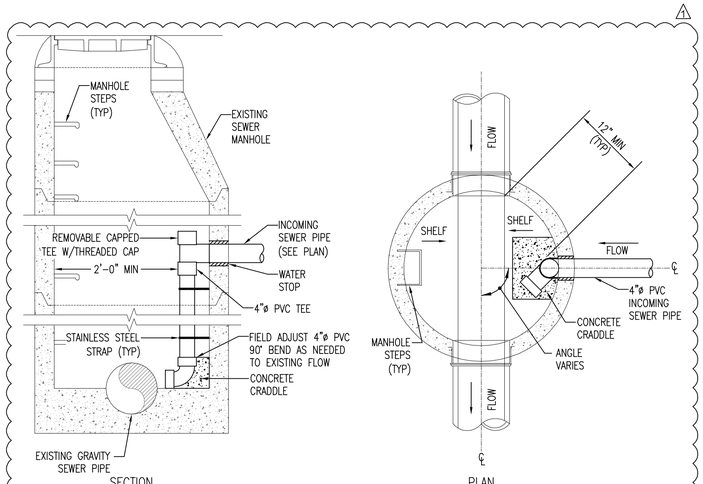

NOTES:

1. STAINLESS STEEL STRAPS SHALL BE USED ON ALL DROPS GREATER THAN 5 FEET AT 18" INTERVALS.
2. PIPE SIZE FOR DROP TO EQUAL INFLOW SEWER PIPE SIZE.
3. SAW-CUT OR DRILL ALL HOLES FOR PIPE AND BOLTS.

STANDARD SEWER INSIDE DROP MANHOLE

SCALE: NOT TO SCALE

SYM	DESCRIPTION	DATE
1	BID OPTION	11/4/15
	FINAL CORRECTED SET	3/26/14
	100% FINAL DESIGN SUBMISSION	2/3/14
	65% VE SUBMISSION	11/25/13
	65% SUBMITTAL	4/26/13
	35% SUBMITTAL	3/8/13
	20% SUBMITTAL	1/18/13

NAVFAC

STATE OF MARYLAND MICHAEL W. PUCKETT No. 42603 PROFESSIONAL ENGINEER
11-04-15

HDR
ARCHITECTURE | ENGINEERING & CONSULTING
1101 KING STREET
SUITE 400
ALEXANDRIA, VIRGINIA 22314
703-518-8500

APPROVED
FOR COMMANDER NAVFAC
ACTIVITY
SATISFACTORY TO DATE
DES MMM DRW NI CHK MWP
PM/DM CHEMENJU/HILL
BRANCH MANAGER N/A
CHIEF ENGIARCH TOM COX

DEPARTMENT OF THE NAVY
NAVAL FACILITIES ENGINEERING COMMAND ATLANTIC
NSA/JB/Bethesda
NAVAL FACILITIES ENGINEERING COMMAND
NAVFAC WASHINGTON
Walter reed National Military Medical center - Bethesda, Maryland
BETHESDA, MD
P125 - TEMPORARY MEDICAL FACILITIES
PACKAGE 2 - CLINIC BUILDING
CIVIL - CONSTRUCTION DETAILS

SCALE: NOT TO SCALE
EPROJECT NO.: 1151333
CONSTR. CONTR. NO. N62470-09-D-9044
NAVFAC DRAWING NO. 13065753
SHEET OF 0
C-501-V

STANDARD EROSION AND SEDIMENT CONTROL NOTES

1. THE CONTRACTOR SHALL NOTIFY THE ADMINISTRATION (WMA) AT (410) 537-3510 SEVEN (7) DAYS BEFORE COMMENCING ANY LAND DISTURBING ACTIVITY AND, UNLESS WAIVED BY THE ADMINISTRATION, SHALL BE REQUIRED TO HOLD A PRE-CONSTRUCTION MEETING BETWEEN PROJECT REPRESENTATIVES AND A REPRESENTATIVE OF WMA.

2. THE CONTRACTOR MUST NOTIFY WMA IN WRITING AND BY TELEPHONE AT THE FOLLOWING POINTS:
A. THE REQUIRED PRE-CONSTRUCTION MEETING.
B. FOLLOWING INSTALLATION OF SEDIMENT CONTROL MEASURES.
C. DURING THE INSTALLATION OF SEDIMENT BASINS (TO BE CONVERTED INTO PERMANENT STORMWATER MANAGEMENT STRUCTURES) AT THE REQUIRED INSPECTION POINTS (SEE INSPECTION CHECKLIST ON PLAN). NOTIFICATION PRIOR TO COMMENCING CONSTRUCTION OF EACH STEP IS MANDATORY.
D. PRIOR TO REMOVAL OR MODIFICATION OF ANY SEDIMENT CONTROL STRUCTURE(S).
E. PRIOR TO REMOVAL OF ALL SEDIMENT CONTROL DEVICES.
F. PRIOR TO FINAL ACCEPTANCE.
G. ANY CHANGES TO THE SEQUENCE MUST BE APPROVED BY MDE/WMA PLAN REVIEW.

3. THE CONTRACTOR SHALL CONSTRUCT ALL EROSION AND SEDIMENT CONTROL MEASURES PER THE APPROVED PLAN AND CONSTRUCTION SEQUENCE AND SHALL HAVE THEM INSPECTED AND APPROVED BY THE AGENCY INSPECTOR OR WMA INSPECTOR PRIOR TO BEGINNING ANY OTHER LAND DISTURBANCES. MINOR SEDIMENT CONTROL DEVICE LOCATION ADJUSTMENTS MAY BE MADE IN THE FIELD WITH THE APPROVAL OF THE WMA INSPECTOR. THE CONTRACTOR SHALL ENSURE THAT ALL RUNOFF FROM DISTURBED AREAS IS DIRECTED TO THE SEDIMENT CONTROL DEVICES AND SHALL NOT REMOVE ANY EROSION OR SEDIMENT CONTROL MEASURE WITHOUT PRIOR PERMISSION FROM WMA INSPECTOR AND AGENCY INSPECTOR. THE CONTRACTOR MUST OBTAIN PRIOR AGENCY AND WMA APPROVAL FOR CHANGES TO THE SEDIMENT CONTROL PLAN AND/OR SEQUENCE OF CONSTRUCTION.

4. THE CONTRACTOR SHALL PROTECT ALL POINTS OF CONSTRUCTION INGRESS AND EGRESS TO PREVENT THE DEPOSITION OF MATERIALS ONTO PUBLIC ROADS. ALL MATERIALS DEPOSITED ONTO PUBLIC ROADS SHALL BE REMOVED IMMEDIATELY.

5. THE CONTRACTOR SHALL INSPECT DAILY AND MAINTAIN CONTINUOUSLY IN AN EFFECTIVE OPERATING CONDITION ALL EROSION AND SEDIMENT CONTROL MEASURES UNTIL SUCH TIMES AS THEY ARE REMOVED WITH PRIOR PERMISSION FROM WMA INSPECTOR AND AGENCY INSPECTOR.

6. ALL SEDIMENT BASINS, TRAP EMBANKMENTS AND SLOPES, PERIMETER DIKES, SWALES AND ALL DISTURBED SLOPES STEEPER OR EQUAL TO 3:1 SHALL BE STABILIZED WITH SOD OR SEED AND ANCHORED STRAW MULCH, OR OTHER APPROVED STABILIZATION MEASURES, AS SOON AS POSSIBLE BUT NO LATER THAN TWO (2) CALENDAR DAYS AFTER ESTABLISHMENT. ALL AREAS DISTURBED OUTSIDE OF THE PERIMETER SEDIMENT CONTROL SYSTEM MUST BE MINIMIZED. MAINTENANCE MUST BE PERFORMED AS NECESSARY TO ENSURE CONTINUED STABILIZATION. (REQUIREMENT FOR STABILIZATION MAY BE REDUCED TO ONE (1) DAY FOR SENSITIVE AREAS.)

7. THE CONTRACTOR SHALL APPLY SOD OR SEED AND ANCHORED STRAW MULCH, OR OTHER APPROVED STABILIZATION MEASURES TO ALL DISTURBED AREAS AND STOCKPILES WITHIN SEVEN (7) CALENDAR DAYS AFTER STRIPPING AND GRADING ACTIVITIES HAVE CEASED IN THE AREA. MAINTENANCE SHALL BE PERFORMED AS NECESSARY TO ENSURE CONTINUED STABILIZATION. (REQUIREMENT MAY BE REDUCED TO TWO (2) DAYS FOR SENSITIVE AREAS.)

8. PRIOR TO REMOVAL OF SEDIMENT CONTROL MEASURES, THE CONTRACTOR SHALL STABILIZE AND HAVE ESTABLISHED PERMANENT STABILIZATION FOR ALL CONTRIBUTORY DISTURBED AREAS USING SOD OR AN APPROVED PERMANENT SEED MIXTURE WITH REQUIRED SOIL AMENDMENTS AND AN APPROVED ANCHORED MULCH. WOOD FIBER MULCH MAY ONLY BE USED IN SEEDING SEASON WHERE THE SLOPE DOES NOT EXCEED 10% AND GRADING HAS BEEN DONE TO PROMOTE SHEET FLOW DRAINAGE. AREAS BROUGHT TO FINISHED GRADE DURING THE SEEDING SEASON SHALL BE PERMANENTLY STABILIZED AS SOON AS POSSIBLE, BUT NOT LATER THAN SEVEN (7) CALENDAR DAYS AFTER ESTABLISHMENT. WHEN PROPERTY IS BROUGHT TO FINISHED GRADE DURING THE MONTHS OF NOVEMBER THROUGH FEBRUARY, AND PERMANENT STABILIZATION IS FOUND TO BE IMPRACTICAL, TEMPORARY SEED AND ANCHORED STRAW MULCH SHALL BE APPLIED TO DISTURBED AREAS. THE FINAL PERMANENT STABILIZATION OF SUCH PROPERTY SHALL BE APPLIED BY MARCH 15 OR EARLIER IF GROUND AND WEATHER CONDITIONS ALLOW.

9. THE SITE'S APPROVAL LETTER, APPROVED EROSION AND SEDIMENT CONTROL PLANS, DAILY LOG BOOKS, AND TEST REPORTS SHALL BE AVAILABLE AT THE SITE FOR INSPECTION BY DULY AUTHORIZED OFFICIALS OF WMA AND THE AGENCY RESPONSIBLE FOR PROJECT.

10. SURFACE DRAINAGE FLOWS OVER UNSTABILIZED CUT AND FILL SLOPES SHALL BE CONTROLLED BY EITHER PREVENTING DRAINAGE FLOWS FROM TRAVERSING THE SLOPES OR BY INSTALLING PROTECTIVE DEVICES TO LOWER THE WATER DOWNSLOPE WITHOUT CAUSING EROSION. DIKES SHALL BE INSTALLED AND MAINTAINED AT THE TOP OF A CUT OR FILL SLOPE UNTIL THE SLOPE AND DRAINAGE AREA TO IT ARE FULLY STABILIZED, AT WHICH TIME THEY MUST BE REMOVED AND FINAL GRADING DONE TO PROMOTE SHEET FLOW DRAINAGE. PROTECTIVE METHODS MUST BE PROVIDED AT POINTS OF CONCENTRATED FLOW WHERE EROSION IS LIKELY TO OCCUR.

11. PERMANENT SWALES OR OTHER POINTS OF CONCENTRATED WATER FLOW SHALL BE STABILIZED WITH SOD OR SEED WITH AN APPROVED EROSION CONTROL MATTING, RIP-RAP, OR BY OTHER APPROVED STABILIZATION MEASURES.

12. TEMPORARY SEDIMENT CONTROL DEVICES MAY BE REMOVED, WITH PERMISSION OF WMA INSPECTOR AND AGENCY INSPECTORS, WITHIN THIRTY (30) CALENDAR DAYS FOLLOWING ESTABLISHMENT OF PERMANENT STABILIZATION IN ALL CONTRIBUTORY DRAINAGE AREAS. STORMWATER MANAGEMENT STRUCTURES USED TEMPORARILY FOR SEDIMENT CONTROL SHALL BE CONVERTED TO THE PERMANENT CONFIGURATION WITHIN THIS TIME PERIOD AS WELL.

13. NO PERMANENT CUT OR FILL SLOPE WITH A GRADIENT STEEPER THAN 3:1 WILL BE PERMITTED IN LAWN MAINTENANCE AREAS. A SLOPE GRADIENT OF UP TO 2:1 WILL BE PERMITTED IN NONMAINTENANCE AREAS PROVIDED THAT THOSE AREAS ARE INDICATED ON THE EROSION AND SEDIMENT CONTROL PLAN WITH A LOW-MAINTENANCE GROUND COVER SPECIFIED FOR PERMANENT STABILIZATION. SLOPE GRADIENT STEEPER THAN 2:1 WILL NOT BE PERMITTED WITH VEGETATIVE STABILIZATION.

14. FOR FINISHED GRADING, THE CONTRACTOR SHALL PROVIDE ADEQUATE GRADIENTS TO PREVENT WATER FROM PONDING FOR MORE THAN TWENTY FOUR (24) HOURS AFTER THE END OF A RAINFALL EVENT. DRAINAGE COURSES AND SWALE FLOW AREAS MAY TAKE AS LONG AS FORTY-EIGHT (48) HOURS AFTER THE END OF A RAINFALL EVENT TO DRAIN. AREAS DESIGNED TO HAVE STANDING WATER SHALL NOT BE REQUIRED TO MEET THIS REQUIREMENT.

15. SEDIMENT TRAPS OR BASINS ARE NOT PERMITTED WITHIN 20 FEET OF A FOUNDATION THAT EXISTS OR IS UNDER CONSTRUCTION. NO STRUCTURE MAY BE CONSTRUCTED WITHIN 20 FEET OF AN ACTIVE SEDIMENT TRAP OR BASIN.

16. THE WMA INSPECTOR HAS THE OPTION OF REQUIRING ADDITIONAL SAFETY OR SEDIMENT CONTROL MEASURES, IF DEEMED NECESSARY.

17. ALL TRAP DEPTH DIMENSIONS ARE RELATIVE TO THE OUTLET ELEVATION. ALL TRAPS MUST HAVE A STABLE OUTFALL. ALL TRAPS AND BASINS SHALL HAVE STABLE INFLOW POINTS.

18. VEGETATIVE STABILIZATION SHALL BE PERFORMED IN ACCORDANCE WITH THE STANDARDS AND SPECIFICATIONS FOR SOIL EROSION AND SEDIMENT CONTROL. REFER TO APPROPRIATE SPECIFICATIONS FOR TEMPORARY SEEDING, PERMANENT SEEDING, MULCHING, SODDING, AND GROUND COVERS.

19. SEDIMENT SHALL BE REMOVED AND THE TRAP OR BASIN RESTORED TO ITS ORIGINAL DIMENSIONS WHEN THE SEDIMENT HAS ACCUMULATED TO ONE QUARTER OF THE TOTAL DEPTH OF THE TRAP OR BASIN. TOTAL DEPTH SHALL BE MEASURED FROM THE TRAP OR BASIN BOTTOM TO THE CREST OF THE OUTLET.

20. SEDIMENT REMOVED FROM TRAPS (AND BASINS) SHALL BE PLACED AND STABILIZED IN APPROVED AREAS, BUT NOT WITHIN A FLOODPLAIN, WETLAND OR TREE-SAVE AREA. WHEN PUMPING SEDIMENT LADEN WATER, THE DISCHARGE MUST BE DIRECTED TO A SEDIMENT TRAPPING DEVICE PRIOR TO RELEASE FROM THE SITE. A SUMP PIT MAY BE USED IF SEDIMENT TRAPS THEMSELVES ARE BEING PUMPED OUT.

21. ALL WATER REMOVED FROM EXCAVATED AREAS SHALL BE PASSED THROUGH A WMA APPROVED DEWATERING PRACTICE OR PUMPED TO A SEDIMENT TRAP OR BASIN PRIOR TO DISCHARGE TO A FUNCTIONAL STORM DRAIN SYSTEM OR TO STABLE GROUND SURFACE.

22. SEDIMENT CONTROL FOR UTILITY CONSTRUCTION FOR AREAS OUTSIDE OF DESIGNED CONTROLS OR AS DIRECTED BY ENGINEER OR WMA INSPECTOR:
A. CALL UTILITIES SURVEYOR CONTRACTED BY NAVFAC PRIOR TO THE START OF WORK.
B. EXCAVATED TRENCH MATERIAL SHALL BE PLACED ON DUMP TRUCKS FOR TEMPORARY STORAGE OR DISPOSAL. NO TEMPORARY STOCK PILING OF MATERIALS WILL BE ALLOWED ON THE PROJECT SITE.
C. TRENCHES FOR UTILITY INSTALLATION SHALL BE BACKFILLED, COMPACTED, AND STABILIZED AT THE END OF EACH WORKING DAY. NO MORE TRENCH SHALL BE OPENED THAN CAN BE COMPLETED THE SAME DAY, UNLESS;
D. TEMPORARY SILT FENCE SHALL BE PLACED IMMEDIATELY DOWNSTREAM OF ANY DISTURBED AREA INTENDED TO REMAIN DISTURBED FOR MORE THAN ONE DAY.
E. AREAS SURROUNDING UTILITY TRENCH INSTALLATIONS SHALL BE SWEPT CLEAN AT THE END OF EACH WORK DAY.

23. WHERE DEEMED APPROPRIATE BY THE ENGINEER OR INSPECTOR, SEDIMENT BASINS AND TRAPS MAY NEED TO BE SURROUNDED WITH AN APPROVED SAFETY FENCE. THE FENCE MUST CONFORM TO LOCAL ORDINANCES AND REGULATIONS. THE DEVELOPER OR OWNER SHALL CHECK WITH LOCAL BUILDING OFFICIALS ON APPLICABLE SAFETY REQUIREMENTS. WHERE SAFETY FENCE IS DEEMED APPROPRIATE AND LOCAL ORDINANCES DO NOT SPECIFY FENCING SIZES AND TYPES, THE FOLLOWING SHALL BE USED AS A MINIMUM STANDARD: THE SAFETY FENCE MUST BE MADE OF WELDED WIRE AND AT LEAST 42 INCHES HIGH, HAVE POSTS SPACED NO FARTHER APART THAN 8 FEET, HAVE MESH OPENINGS NO GREATER THAN 2 INCHES IN WIDTH AND 4 INCHES IN HEIGHT WITH A MINIMUM OF 14 GAUGE WIRE. SAFETY FENCE MUST BE MAINTAINED AND IN GOOD CONDITION AT ALL TIMES.

24. OFF-SITE SPOIL OR BORROW AREAS ON STATE OR FEDERAL PROPERTY MUST HAVE PRIOR APPROVAL BY WMA AND OTHER APPLICABLE STATE, FEDERAL, AND LOCAL AGENCIES; OTHERWISE APPROVAL MUST BE GRANTED BY THE LOCAL AUTHORITIES. ALL WASTE AND BORROW AREAS OFF-SITE MUST BE PROTECTED BY SEDIMENT CONTROL MEASURES AND STABILIZED.

25. SITES WHERE INFILTRATION DEVICES ARE USED FOR THE CONTROL OF STORMWATER, EXTREME CARE MUST BE TAKEN TO PREVENT RUNOFF FROM UNSTABILIZED AREAS FROM ENTERING THE STRUCTURE DURING CONSTRUCTION. SEDIMENT CONTROL DEVICES PLACED IN INFILTRATION AREAS MUST HAVE BOTTOM ELEVATIONS AT LEAST TWO (2) FEET HIGHER THAN THE FINISH GRADE BOTTOM ELEVATION OF THE INFILTRATION PRACTICE. WHEN CONVERTING A SEDIMENT TRAP TO AN INFILTRATION DEVICE, ALL ACCUMULATED SEDIMENT MUST BE REMOVED AND DISPOSED OF PRIOR TO FINAL GRADING OF INFILTRATION DEVICE.

STANDARD EROSION AND SEDIMENT CONTROL NOTES (CONTINUED)

26. WHEN A STORM DRAIN SYSTEM OUTFALL IS DIRECTED TO A SEDIMENT TRAP OR SEDIMENT BASIN AND THE SYSTEM IS TO BE USED FOR TEMPORARILY CONVEYING SEDIMENT LADEN WATER, ALL STORM DRAIN INLETS IN NON-SUMP AREAS SHALL HAVE TEMPORARY ASPHALT BERMS CONSTRUCTED AT THE TIME OF BASE PAVING TO DIRECT GUTTER FLOW INTO THE INLETS TO AVOID SURCHARGING AND OVERFLOW OF INLETS IN SUMP AREAS.

27. SITE INFORMATION:
A. TOTAL AREA OF FACILITY 3 ACRES
(BASE, CAMPUS, PARK, ETC.)
B. AREA DISTURBED 0.11 ACRES
C. AREA TO BE ROOFED OR PAVED 0.00 ACRES
E. TOTAL FILL 0 CUBIC YARDS
F. OFF-SITE WASTE / BORROW AREA LOCATION N/A

SEQUENCE OF CONSTRUCTION.

1. PRE-CONSTRUCTION MEETING SHALL BE HELD WITH WMA PRIOR TO ANY SITE DISTURBANCE IN ACCORDANCE WITH STANDARD EROSION AND SEDIMENT CONTROL NOTE #1.

2. MARK UP THE PIER LOCATIONS AND THE SAW-CUT LINE. SAW-CUT THE PAVEMENT SECTION AND/OR DRILL PIERS AS PER DIRECTION OF SITE SUPERVISOR. NO DISTURBED AREA SHALL BE LEFT UNSTABILIZED OVERNIGHT UNLESS THE AREA IS DIRECTED TO AN MDE APPROVED SEDIMENT CONTROL DEVICE. THE TEMPORARY BUILDING WILL BE PLACED ON THE PIERS WITH NO ADDITIONAL EARTH DISTURBANCE.

3. CONCURRENTLY WITH STEP 2, EXCAVATE THE UTILITY TRENCHES, INSTALL THE UTILITIES AND BACKFILL THE UTILITY TRENCH. NO DISTURBED AREA SHALL BE LEFT UNSTABILIZED OVERNIGHT UNLESS THE AREA IS DIRECTED TO AN MDE APPROVED SEDIMENT CONTROL DEVICE. ALL OF THE EXCAVATED TRENCH MATERIAL IS TO BE PLACED DIRECTLY INTO ONSITE DUMP TRUCKS FOR REUSE OR DISPOSAL. NO STOCKPILING OF EXCAVATED MATERIALS WILL BE ALLOWED. ANY REMAINING MATERIAL SHALL BE DISPOSED OFF SITE AS DIRECTED BY THE SITE SUPERVISOR AT A SITE WITH AN APPROVED GRADING PERMIT. INSTALL PAVEMENT SECTION TO MEET THE ORIGINAL GRADES.

4. AFTER THE SITE IS PERMANENTLY STABILIZED AND WITH PERMISSION FROM MDE/WMA, REMOVE REMAINING EROSION CONTROL AND SEDIMENT CONTROL MEASURES AND PROVIDE PERMANENT STABILIZATION FOR ANY DISTURBANCE ASSOCIATED WITH THE REMOVAL.

STANDARD STABILIZATION NOTE:

1. FOLLOWING INITIAL SOIL DISTURBANCE OR RE-DISTURBANCE, PERMANENT OR TEMPORARY STABILIZATION MUST BE COMPLETED WITHIN:

A.) THREE (3) CALENDAR DAYS AS TO THE SURFACE OF ALL PERIMETER DIKES, SWALES, DITCHES, PERIMETER SLOPES, AND ALL SLOPES STEEPER THAN 3 HORIZONTAL TO 1 VERTICAL (3:1); AND

B.) SEVEN (7) CALENDAR DAYS AS TO ALL OTHER DISTURBED OR GRADED AREAS ON THE PROJECT SITE NOT UNDER ACTIVE GRADING.

SYM	DESCRIPTION	DATE
1	BID OPTION	11/4/15
	FINAL CORRECTED SET	3/26/14
	100% FINAL DESIGN SUBMISSION	2/3/14
	65% VE SUBMISSION	11/25/13
	65% SUBMITTAL	4/26/13
	35% SUBMITTAL	3/8/13
	20% SUBMITTAL	1/18/13

NAVFAC

STATE OF MARYLAND
MICHAEL W. PUCKETT
No. 42603
PROFESSIONAL ENGINEER
11-04-15

HDR
ARCHITECTURE | ENGINEERING & CONSULTING
1101 KING STREET
SUITE 400
ALEXANDRIA, VIRGINIA 22314
703-518-8500

APPROVED
FOR COMMANDER NAVFAC
ACTIVITY
SATISFACTORY TO DATE

DES MMM DRW NI CHK MWP
PM/DM CHEMENJU/HILL
BRANCH MANAGER N/A
CHIEF ENGIARCH TOM COX

DEPARTMENT OF THE NAVY
NAVAL FACILITIES ENGINEERING COMMAND
ATLANTIC
NAVAL FACILITIES ENGINEERING COMMAND – NAVFAC WASHINGTON
Walter reed National Military Medical center - Bethesda, Maryland
NSA/Bethesda
BETHESDA, MD
P125 - TEMPORARY MEDICAL FACILITIES
PACKAGE 2 - CLINIC BUILDING
CIVIL - SOIL EROSION AND SEDIMENT CONTROL NOTES

SCALE: NOT TO SCALE
EFPROJECT NO.: 1151333
CONSTR. CONTR. NO. N62470-09-D-9044
NAVFAC DRAWING NO. 13065758
SHEET OF 0
C-506-V