RM12-2137 REPAIR RUNWAY 14-32 & 6-24 PHASE 3

NAS PATUXENT RIVER, MD

Basis of Design – Final Submission

eProject No. 1382138
A/E No.: N62470-12-D-2010 T.O. 0004
For: NAVFAC WASHINGTON
Date: September 30, 2016

A Joint Venture

TABLE OF CONTENTS

BASIS OF DESIGN 1

A. PROJECT OVERVIEW 1

B. CIVIL DESIGN 2

1. SCOPE OF WORK 2
2. DESIGN CRITERIA 3
3. EXISTING CONDITIONS 4
4. DEMOLITION 4
5. CONSTRUCTION 5
6. GRADING 5
7. STORM DRAINAGE SYSTEM AND STORMWATER MANAGEMENT 6
8. EROSION AND SEDIMENT CONTROL 7
9. LANDSCAPING DESIGN 8

C. ELECTRICAL DESIGN 9

1. SCOPE OF WORK 9
2. DESIGN CRITERIA 9
3. DESCRIPTION 10
   - i. EXTERIOR DISTRIBUTION SYSTEMS 10
   - ii. AIRFIELD LIGHTING 10

APPENDICES

APPENDIX A CALCULATIONS

APPENDIX B PRODUCT DATA

APPENDIX C FORM E-1

APPENDIX D STORMWATER DESIGN ASSUMPTIONS

APPENDIX E PAVEMENT DESIGN REPORT

APPENDIX F GEOTECHNICAL REPORT

Basis of Design

FY16 SPECIAL PROJECT RM12–2137
REPAIR RUNWAYS 14-32 & 6-24 - PHASE 3
NAVAL AIR STATION PATUXENT RIVER (NASP)

PATUXENT RIVER, MARYLAND

A. PROJECT OVERVIEW

Airfield pavement at Naval Air Station Patuxent River (NASP) has deteriorated to a critical Pavement Condition Index (PCI) that warrants significant repair. The asphalt concrete (AC) lengths of both Runway 14-32 and Runway 6-24 were rehabilitated in 1994, receiving a nominal 3-inch thick AC overlay. Project RM12-2137 includes pavement repairs to Runway 14-32 and 6-24, Runway 20 overrun, the TC-7 catapult access apron, the EMP Towway, and the Compass Rose at T/W D. The Project also provides grading and drainage repairs and repair of deteriorating supporting electrical infrastructure associated with the runways including the lighting vault. Project RM12-2137 will be designed in three Phases. Phase 1 repairs include Runway 14-32 pavement and lighting infrastructure as well as pavement repairs to Runway 20 overrun and the TC-7 catapult access apron. Phase 2 includes the construction of a new replacement lighting vault, and repair of electrical infrastructure. Phase 3 repairs include Runway 6-24 pavement and lighting infrastructure and pavement repairs at the EMP Towway and Compass Rose. Phase 1 design is complete, and construction is scheduled for completion Fall 2016. **This report addresses Phase 3 Runway 6-24 repairs.**

Runway 6-24 is an 11,799-feet long primary runway consisting of both concrete and asphalt pavement construction. Runway 6-24 is 200' wide, with 50' wide shoulders on both sides, reaching a total paved width of approximately 300'. Runway 6-24 pavement sections include concrete pads, full-depth concrete at both Runway ends, and asphalt overlaid on concrete throughout the center Runway length for approximately 9,380 feet. Project RM12-2137 Phase 1 includes Runway 14-32 repairs including Runways 6-24 and 14-32 intersection pavement and centerline lights. Taxiway E repairs adjacent to Runway 14-32 were also constructed with Phase 1 allowing Taxiway E to remain in service with Runway 14-32 during Phase 3 Runway 6-24 closure. Runway 6-24 repairs include two arresting gear systems: A/G No. 2 (at the Runway 6 end), and A/G No. 4 (at the Runway 24 end). A/G No. 2 and A/G No. 4 will have pavement protection systems repaired with this Phase. Elements of Taxiway A West, A East, C, and G that exist within the Runway 6-24 Clear Zone will also be repaired. Taxiway A will receive concrete repairs. Taxiway C and Taxiway G will be repaired by 2.5" nominal depth mill-and-pave. Other airfield components within the Phase 3 repair scope include the EMP Towway (both AC and PCC areas) and the Compass Rose near Taxiway D. The EMP Towway asphalt pavement from the Runway 6-24 edge to the EMP concrete apron will receive 2.5" mill-and-pave. The EMP Apron and the Compass Rose PCC areas will be repaired with full-depth concrete.

Regarding airfield lighting, the existing Runway 6-24 edge lights, centerline lights, and touchdown lights have deteriorated over time and are in need of replacement. The Runway 6-24 distance remaining markers and arresting gear markers do not meet current criteria and are in need of replacement The EMP site consists of static grounding receptacles which will be removed with the pavement and replaced. Taxiway edge lights that do not meet criteria will be replaced.

B. CIVIL DESIGN

1. SCOPE OF WORK:

This project will repair Runway 6-24 asphalt and concrete pavement, including runway access points at Naval Air Station, Patuxent River (NASP). The primary pavement rehabilitation scope will include large scale rehabilitation by mill-and-overlay, areas of demolition and reconstruction, and local repairs of existing concrete pavement. The predominant work item is the rehabilitation of approximately 2,934,000 SF of asphalt runway, taxiway, and shoulder pavement through a mill-and-overlay operation. Full-depth concrete pavement reconstruction is scheduled for the EMP area and the Compass Rose at Taxiway D. Additional concrete pavements, including the Runway 6 end, the Runway 2 end, and the Runway 24 end, will receive various concrete pavement repairs (full-depth, partial-depth, sealing, etc.). The two arresting gear (A/G) pavement protection systems located on Runway 6-24 will be reconstructed. Replacement of the arresting gear pavement protection systems will take place at A/G No. 2 and No. 4. The concrete slabs at the plates will be reconstructed and new plating will be provided. Runway 6-24 pavement intersecting Runway 14-32 and Taxiway E was repaired under Phase 1.

Regarding phasing, critical runway intersection pavement work will take place at the Runway 6 end during this project. Timely completion of the Runway 6 end work is critical, as Runway 2-20 is needed for operations while Runway 6-24 is closed, and because Taxiway A is needed for airfield circulation in this corner of the airfield. For the Phasing, work will begin at the Runway 6 end, emphasizing the repairs needed to re-open both Taxiway A and the Runway 2-20 end that crosses at the Runway 6 end. This work area ends just south of the Taxiway E intersection along Runway 6-24. The second work area starts approximately 175 feet northeast of the Runway-Runway intersection. As previously described, Phase 1 intersection work limits were expanded to include Taxiway E allowing it to operate in tandem with R/W 14-32 while Phase 3 Runway 6-24 rehabilitation is underway. The final two phases of work include the EMP Towway and the Compass Rose off Taxiway D. The majority of Phase 3 work is scheduled to take place within the footprint of existing airfield pavement. Grading and drainage repair of failed structures within close proximity of Runway 6-24 is scheduled for this project. Fine grading operations within the unpaved Runway and taxiway shoulders will occur as necessary to accommodate asphalt paving grade changes and operations.

The Phase 3 work limits remain outside the construction clearance limit of Runway 14-32 and Taxiway E (175' from the edge of Runway 14-32 and 150' from the centerline of Taxiway E). Similarly, Runway 2-20 concrete pavement will be rehabilitated adjacent to Runway 6-24 within the Runway 6-24 construction clearance limit.

Repairs to the existing Runway 6-24 concrete pavements include concrete patches, joint sealing, and crack sealing for these areas:

- The Runway 2 threshold, which overlaps the Runway 6 end
- The Runway 6 threshold
- The Runway 24 threshold, including blast pavement
- Taxiway A East and A West at the Runway 2 and 6 ends

For the RM12-2137 Phase 1 scope, the asphalt pavement at the Runway 6-24 Runway 14-32 intersection received anAC mill-and-overlay for the 200' Runway width. The Runway 6-24 rehabilitation

will coordinate with the intersection Runway centerline profiles and the grading constructed during the Phase 1 paving. Mill-and-overlay will also be built for the 50'-wide AC shoulders on both sides of Runway 6-24. For areas where elevations are increased in order to improve runway cross-slope, a minimum mill depth of 0.5" will be used prior to the overlay. A leveling course will be constructed where new grades require additional material beyond the new 2" surface course.

Taxiways G and C (at the Runway 24 end) adjacent to Runway 6-24 will receive a nominal 2" mill-and-pave from the Runway edge to the hold bar. Generally, the paving limit for RM12-2137 is set approximately 25 feet past the Runway hold bar in order to restore the hold bar markings after paving.

2. DESIGN CRITERIA:

UFC 1-200-01, GENERAL BUILDING REQUIREMENTS (1 AUGUST 2015)

UFC 1-300-09N DESIGN PROCEDURES

UFC 2-250-03 STANDARD PRACTICE MANUAL FOR FLEXIBLE PAVEMENTS

UFC 3-201-01 CIVIL ENGINEERING

UFC 3-210-10 LOW IMPACT DEVELOPMENT

UFC 3-250-06 REPAIR OF RIGID PAVEMENTS USING EPOXY RESIN GROUTS, MORTARS, AND CONCRETES

UFC 3-250-07 STANDARD PRACTICE FOR PAVEMENT RECYCLING

UFC 3-250-08FA STANDARD PRACTICE FOR SEALING JOINTS AND CRACKS IN RIGID AND FLEXIBLE PAVEMENTS

UFC 3-260-01 AIRFIELD AND HELIPORT PLANNING AND DESIGN

UFC 3-260-02 PAVEMENT DESIGN FOR AIRFIELDS

UFC 3-260-03 AIRFIELD PAVEMENT EVALUATION

UFC 3-270-01 ASPHALT MAINTENANCE AND REPAIR

UFC 3-270-02 ASPHALT CRACK REPAIR

UFC 3-270-03 CONCRETE CRACK AND PARTIAL DEPTH SPALL REPAIR

UFC 3-270-04 CONCRETE REPAIR

NAVAIR 51-50AAA-2 GENERAL REQUIREMENTS FOR SHOREBASED AIRFIELD MARKING AND LIGHTING

3. EXISTING CONDITIONS:

The NASP site includes three Runways:

- Runway 2-20 is 5,020' long and 75' wide, with 37.5' wide paved shoulders on each side
- Runway 6-24 is 11,500' long and 200' wide, with 50' paved shoulders on each side
- Runway 14-32 is 9,700' long and 200' wide, with 50' paved shoulders on each side

The three NASP Runways are all interconnected with a major intersection occurring with Runways 6-24 and 14-32. Runway 2-20 intersects both 6-24 and 14-32, with the 20 overrun intersecting near the Runway 14 end, and the Runway 2 end crossing the Runway 6 end. Two arresting gear (A/G) systems are located along Runway 6-24. Arresting Gear No. 2 and No. 4, located on the 6 and 24 ends respectively, are standard arresting gear pavement protection systems. Idle pavement (former airfield pavement abandoned and left to vegetate) exists within the area between all three NASP Runways, as well as adjacent to Runways 2-20 and 6-24, and may be removed to accommodate project permitting. The stormwater runoff is collected and conveyed away from the site by existing swales, inlets, and underground piping. Utilities present within the airfield include water, sanitary, electrical, and communications. To the extent possible, approximate locations of buried utilities within 100 feet of the Runway 6-24 pavement edges were determined and shown on the plans. These were determined with various electronic equipment during the survey phase. The contractor will be required to verify all buried utilities prior to commencing any digging operations.

4. DEMOLITION:

Civil site demolition will include concrete pavement removal and bituminous pavement milling and cutting. Minor sawcutting and removal of existing concrete will be done for PCC pavement partial and full-depth replacement in order to repair cracking and spalling at the Runway 6 and 24 ends. Full-depth removal of the center slabs along the Runway 6-24 centerline will occur at both ends of the Runway for the runway lighting light and conduit installation. Multiple construction methods were reviewed to modify the existing slab along the centerline for installing the new light and conduit length. Each construction method that involved modification of the existing PCC center slab was ruled out, both for quality and cost considerations. The extensive handwork for dowel demolition, dowel installation, concrete removal, and concrete reinforcing and jointing led to quality concerns, as well as significant labor costs. Removal of the full slab minimized handwork, optimized the joint pattern, and provides the best constructability for the pavement area that would receive the most repetitions and the highest aircraft loadings. Accordingly, this method was selected to facilitate centerline light replacement.

The asphalt pavement (AC) for the mid-length of Runway 6-24 will be removed to partial depth by milling. The milling will have a minimum ½- inch depth to ensure removal of any existing grooving as well as the weathered bituminous surface. Milling depth is also adjusted to accommodate required asphalt lift depths for surface and leveling course as required.

While performing the concrete rehabilitation, a combination of full and partial slab repairs will be included for the Runway 6 end, Runway 2 end, and the Taxiway A West and A East areas that fall within the Runway 6-24 Clear Zone. These areas require minor concrete demolition for patching. Pavement distress mapping was performed and is summarized on the Plans. A wide range of concrete pavement distresses were noted, resulting in varying degrees of pavement demolition and repair practices.

5. CONSTRUCTION:

Construction activity for Phase 3 will consist of asphalt and concrete pavement, grading along the edges of repaired paved surfaces, pavement markings, paved and unpaved surface trench restoration, concrete pavement repairs, and storm drain system repairs.
Asphalt overlay will take place throughout the length of the runway and include both full-strength runway pavement and shoulder pavement. In addition, asphalt pavement overlay will take place at Taxiways C and G connectors and along the EMP Towway. UFGS Section 32 12 15.13 paving material is scheduled for the project. Gradation 2 will be used as surface course throughout the full-strength runway and taxiway project area. Use of Gradation 1 is scheduled for deep asphalt pavement repairs and mill-and-overlay areas where both Gradation 1 and 2 are required to meet finished grades. Gradation 3 is scheduled for shoulder pavement, roadways, and leveling course, as needed.

Concrete pavement will be reconstructed along the centerline to accommodate lighting installations and at the EMP Site and Compass Rose. The concrete pavement is plain jointed concrete pavement with necessary dowels and welded wire fabric to transfer loads and accommodate odd-shaped slabs, respectively. The Compass Rose pavement shall not contain ferrous material; instead, it is to be reinforced with fiberglass bars and welded wire fabric.

Additional concrete work includes the concrete pavement repairs and the construction of threshold lightbar pavement. Concrete repairs will take place on both the Runway 6 and 24 ends. Concrete pavement repairs consist of partial depth repairs (spalls and pop-outs) and full-depth repairs (corners, partial slab widths, and slab replacement). Cracks are scheduled to be sawed and sealed. Concrete joints will be resealed. Failed sawkerf conduit trenches are identified for repair as well. Threshold lightbar pavement will be removed and reconstructed on both runway ends to accommodate new light and conduit installation.

Storm drainage construction activity is discussed in Section 7.

6. GRADING:

UFC 03-260-01 design standards for Class B runways include, but are not limited to:

- 1% maximum longitudinal runway grades
- 1% to 1.5% transverse runway grades
- 2% to 3% transverse paved shoulder (50 feet wide) grades
- 2% to 4% transverse unpaved shoulder (100 feet wide) grades.

The rehabilitation of Runway 6-24 will adhere to these requirements within the area of asphalt pavement mill-and-overlay. Existing conditions that currently fall outside the specified requirements will be improved within the constraints of the project to comply with UFC standards. Constraints that will limit the ability to achieve the previous described gradient criteria include pavement intersections, existing navigational aid infrastructure, existing concrete pavement ends, arresting gear configurations, and existing conditions requiring excessive earthwork (e.g., infield areas that significantly expand the LOD and increase earthwork volumes outside the limits of project budgeting).

A review of the initial survey indicates that existing Runway 6-24 pavement longitudinal and transverse grades <u>do not comply</u> with all UFC design requirements. While maximum longitudinal grade requirements are met, vertical curves are present within the first and last 3,000 feet of the Runway 6-24 centerline profile which deviate from standard. In addition, runway pavement transverse grades consistently fall slightly under the minimum standard of 1% cross-slope. While several areas do

achieve steeper slopes with grades up to the maximum 1.5% slope, a general increase in transverse grade throughout the length of the AC pavement portion of the runway is included in this design. Furthermore, the unpaved portion of the shoulder ranges in transverse grades of 0.5% to 4%, and changes slope throughout the length of the Runway. Grades falling below the recommended 2% minimum create potential ponding conditions adjacent to the runway which are unsafe for aircraft and may attract wildlife after storm events.

In order to improve the Runway gradient deficiencies, the design proposes an increase in profile elevation along the length of the AC Runway pavement section to accommodate a minimum 1.25% transverse grade. As discussed in Section 5, the elevation increase will be achieved through a minimum 0.5 inch pavement mill and a minimum 2.5" overlay with a variable base course where necessary. The improvement will provide a larger percentage of cross-slope in compliance with standards. This will drain the Runway quickly and efficiently during storm events. As the paved shoulder slope generally meets the minimum standard of 2% transverse grade, the primary design for the paved shoulder area will be to hold the 2% cross-slope and improve the few areas that fall outside the standard. Paved and unpaved areas that fall outside the gradient requirements will be improved to the greatest extent possible. Where necessary, existing infield swales are utilized to drain the relatively flat areas. Limits of grading have been set to eliminate impacts to wetland areas while still providing positive drainage.

The existing conditions of the EMP towway do not adhere to the requirements within UFC 03-260-01 which states the transverse grade must fall between 2% and 3%. The design proposes and increased in profile elevation along the length of the Towway in order to improve transverse grades. The raised profile allowed the Towway to meet standard or improve on current drainage conditions in all areas. In the PCC area of the EMP site, the profile was raised slightly to increase drainage performance to achieve the minimum drainage criteria of 1%.

UFC 03-260-01 states that the maximum transverse grade for the Compass Rose shall be 1%. The design increases the profile elevation through the Compass Rose while still adhering the standard transverse grade criteria.

7. STORM DRAINAGE SYSTEM AND STORMWATER MANAGEMENT:

The Phase 3 RM12-2137 Form 1391 estimate includes provisions for "Grading and Drainage Repair" as part of the Runway 6-24 repair. Infield grading is discussed in detail in Sections 6 of this report. Generally, grading for Runway shoulder pavements will not vary significantly from original grade; thus the infield grading will be limited in most areas. The PCC pavements along Runway 6-24 will only receive repairs, matching adjacent slabs and resulting in only minor grade changes. Accordingly, drainage features (pipes and structures) will require little modification to handle additional stormwater run-off.

The existing drainage system has been evaluated based on field measurements conducted with this project, GIS information and CCTV report (by others) provided by the client. Field observations were made of structures that have deteriorated or settled causing failure of adjacent infields. Based on review of the CCTV report, several segments of existing storm drain piping show signs of deterioration. Rather than excavate and replace piping segments under Runways, we are recommending lining the existing piping with a cured-in-place pipe liner. Locations and limits of pipe lining are shown on the contract drawings. The results of our review of CCTV report for storm drain segments beneath Runway 6-24 is included in Appendix D.

Stormwater management treatment requirements will be evaluated for the runway repairs, the electrical design in Runway 6-24 airfield lighting for threshold and edge lights, light bases, conduit, handholes, and signs. In lieu of a structural stormwater facility, the stormwater management report will recommend meeting the management requirement for work associated with Phase 3 improvements by requesting a debit from the water quality bank established from the during Phase 1. A SWM Report will be submitted to MDE for their review of this project.

8. EROSION AND SEDIMENT CONTROL:

The needs for erosion control for the project will be less significant, since the asphalt mill-and-overlay work should not require extensive infield grading. Similar to the AC work areas, the concrete repair work is limited to patching and sealing, with lesser areas for slab-by-slab, full-depth replacement. No new Erosion control provisions will be required for any staging area location(s), and for the haul routes that access both the staging areas and the work site. A new batch plant may be sited in an existing soil stockpile off of Shaw Road south of the 6 end of Runway 6-24. Earth disturbance for conduit, lighting and runway shoulder grading will call for same day stabilization as the primary erosion and sediment control measure. Perimeter erosion and sediment control has been design for all staging areas and is shown on the contract drawings. The project plans will be submitted to MDE for their review to acquire joint SWM and E&S approval.

Permitting: Erosion and Sediment Control/Stormwater Management

Earth disturbance for the work of RM12-2137 Phase 3 will exceed 5,000 square feet. As a result, Erosion and Sediment Control and Stormwater Management plan review and approval by the Maryland Department of the Environment (MDE) will be required. Plans must be submitted to the Sediment and Stormwater Plan Review group for the concept, site development, and final stormwater management design of the project. The submittal will include the minimum content specified in the Maryland Stormwater Management Guidelines for State and Federal Projects. Design standards are listed as follows:

- 2011 Maryland Standards and Specifications for Soil Erosion and Sediment Control
- 2000 Maryland Stormwater Design Manual, Volumes 1 and 2

Stormwater management requirements for the project will be met by removal, if required, of existing impervious paving (idle pavement) adjacent to Runway 6-24 and by a debit from the water quality bank for the facility.

Permitting: NPDES Stormwater During Construction

This project results in an earth disturbance which exceeds one acre, and therefor requires coverage under the NPDES General Permit for Stormwater Associated with Construction Activity. Coverage under this permit must be obtained prior to initiating earth disturbance on any part of the project. Application for the permit requires completion of a Notice of Intent (NOI) form using the MDE e-Permits interface. Once the completed NOI has been filed, the permit application will be placed on Public Notice for a period of 2 weeks. Following completion of the public notice period and submittal of certification of erosion and sediment control plan approval, permit approval will be issued.

The NOI application will be prepared with the Government Representative as the Responsible Person. Upon selection of a construction contractor, the permit must be transferred to the Contractor who will be responsible for performance.

Permitting: Wetlands

Based on a field delineation of project site wetland areas have been identified in close proximity to the runway and work areas. Modifications have been made to the design to avoid impacts to actual wetland areas and minimize impacts to the 25' buffer. A Jurisdictional Determination (JD) of identified wetlands is currently being coordinated.

Permitting: Coastal Zone Consistency

Work of the project occurs outside of the Maryland Coastal Zone. Work activities must be in compliance with requirements of the Memorandum of Understanding between the State of Maryland and The United States Department of Defense. In order to determine applicable requirements, a Consistency submittal must be prepared. A Federal Consistency Determination (FDC) application is currently being coordinated and will be provided to NASP.

9. LANDSCAPING DESIGN:

Since Runway 6-24 has 50' wide paved shoulders, the infield grading at the Runway edges can be minimized. This is because the majority of the pavement grade changes for the full-strength Runway pavements can be tapered within the width of the 50' paved shoulder. An exception to this is the Runway 24 end, where the infields have areas to reset to as-needed infield cross-slopes. Another area that will require restoration, dependent on the final scope for drainage repair, is the infields where the stormwater trunk lines run between the Runway 6 end and Runway 2-20. When this infield is disturbed for the pipe and structure work, the infield grading will be repaired to meet UFC criteria for infields.

Minor landscaping will be needed to restore the infields at any electrical conduit or ductbank installation. Significant infield grading area will also occur where drainage structures are rebuilt, based on field observation of the number of areas, as well as the square yardage at each failed manhole or inlet.

C. ELECTRICAL DESIGN

1. SCOPE OF WORK:

The electrical airfield lighting for Runway 6-24 consists of repairs to the edge lights and centerline lights. The Runway touchdown zone lights and distance remaining and arresting gear markers will be replaced. The Runway edge and centerline lights will be replaced with incandescent lights. The lighting upgrades will include new light base cans, series lighting isolation transformers, and conduit and wire. The existing edge marking and lights for Runway 6-24 connecting taxiways do not meet criteria and the taxiway edge lights will be relocated where they are not compliant. New taxiway fixtures will be provided where needed. The EMP apron contains a number of equipment grounding receptacles that will be demolished along with the PCC pavement. New receptacles will be installed to replace the demolished receptacles with the new PCC pavement.

The existing hand holes and conduit for Runway 6-24 airfield lighting circuits will be demolished, and the lighting will be revised. New 2" schedule 40 PVC ducts will be provided, including wiring, 1/C #6 AWG L-824 Type C conductor, airfield lighting circuits from the existing airfield vault to the new fixtures. Both the runway edge lighting and centerline lighting will be interleaved and each system shall have two circuits for redundancy. This will be designed per UFC and The airfield lighting circuits will be routed to a manhole located along Taxiway B and spliced into new lighting circuit conductors from the airfield vault that was provided under Phase 2. Circuits provided in this project will be maintained in isolated conduit systems for ease of service while maintaining safety standards. To the extent possible, electrical distribution wiring and manholes rendered out of service will be demolished. Existing conduit rendered out of service will be abandoned in place. The electrical infrastructure provided will include a minimum of 33 percent spare conduits. Conduits placed under runways will be installed using cut and trench with the conduits encased in concrete and will include restoration of the disturbed areas.

The distance remaining markers and arresting gear markers along Runway 6-24 will be replaced along with new circuit conductors and spliced into the runway edge light circuits.

The grounding receptacles at the EMP apron will be installed at the same locations and will be exothermically welded to a #1/0 AWG bare copper grounding grid throughout the apron.

2. DESIGN CRITERIA:

NAVAIR 51-50AAA-2, GENERAL REQUIREMENTS FOR SHOREBASED AIRFIELD MARKING AND LIGHTING, CHANGE 2 (1 SEPTEMBER 2009)

NFPA 70, NATIONAL ELECTRICAL CODE (2014)

UFC 1-200-01, GENERAL BUILDING REQUIREMENTS (1 AUGUST 2015)

UFC 3-501-01, ELECTRICAL ENGINEERING (1 JULY 2012)

UFC 3-535-01, VISUAL AIR NAVIGATION FACILITIES (17 NOVEMBER 2005)

UFC 3-535-02 (DRAFT), DESIGN DRAWINGS FOR VISUAL AIR NAVIGATION FACILITIES (AUGUST 2004)

FAA AC 150/5340-30, DESIGN AND INSTALLATION DETAILS FOR AIRPORT VISUAL AIDS

FAA AC 150/5300-13, AIRPORT DESIGN

IESNA LIGHTING HANDBOOK

3. DESCRIPTION:

i. EXTERIOR DISTRIBUTION SYSTEMS:

The design for the exterior electrical power distribution systems for the airfield lighting systems are as follows:

- Existing Primary Power Source: Existing to remain during this project.
- Existing Constant Current Regulator will be reused during this phase for this project.
- The underground duct bank system will consist of 2" schedule 40 PVC conduit which will be concrete encased under pavement areas and where subject to physical damage.
- Conductors: All conductors shall be copper. The connectors shall be FAA Type L-823. For primary 20A series circuits the cable shall be single-conductor, 5000 VAC, No. 6 AWG, stranded, having Ethylene Propylene Insulation, in accordance with FAA AC 150/5345-7, Specification L-824 Type C. For secondary series circuits, the cable shall be two-conductor, 600 VAC, No. 12 AWG, stranded, FAA L-824 Type C. For multiple circuits, the cable shall be single- or two-conductor, 600 V, No. 10 AWG or larger, FAA L-824 Type C. For control circuits, the cables shall be multi-conductor, 600 V, No. 12 AWG, with insulation suitable for wet locations. Cable installation shall be according to FAA-C-1391 Installation and Splicing of Underground Cable
- Standards of Design: The airfield luminaires shall be high intensity incandescent type fixtures in accordance with NAVAIR 51-50AAA-2.
- Materials: The attached product specification sheets show the basis of design for the power distribution components.

ii. AIRFIELD LIGHTING:

- Runway Edge Lights: FAA AC 150/5345-46, Type L-861, Mode 2, white, elevated, bidirectional, high-intensity.
- Runway Threshold Lights: FAA AC 150/5345-46, Type L-861E, Mode 2, green/red, elevated, bidirectional, high-intensity.
- Taxiway Edge Lights: FAA AC 150/5345-46, Type L861T, Mode 2, blue, elevated, bidirectional, medium intensity.
- Cable: FAA AC 150/5345-53, L-824 Type C.
- Isolation Transformers: FAA AC 150/5345-47, Type L-830.
- Airfield Lighting Connectors: FAA AC 150/5345-26, Type L-823.

APPENDIX A: CALCULATIONS

TABLE 15-4. AGL Series Circuit Load Calculation Data Sheet Vault E-155, Phase 2

CKT No.	Regulator (CCR) (Runway or Taxiway, etc.)	CKT Type (Amps)	Cable Size (AWG)	CCR Rating (kVA) [1]	CCR Input (V)	Steady burning light load (kVA) [2]	Sign load (kVA) [3]	Other loads (kVA) [4]	Total Connected Load (kVA)	Transformer Losses (kVA) [5]	Cable Length (M or FT)	Cable Losses (kVA) [6]	Calculated CCR load (kVA)
A1	R/W 6 APPROACH CIRCUIT 1	6.6	6	30	480	18.900			18.900	3.780	7,000	0.126	22.806
A2	R/W 6 APPROACH CIRCUIT 2	6.6	6	30	480	18.900			18.900	3.780	7,000	0.126	22.806
A3	R/W 6 APPROACH CIRCUIT 3	6.6	6	30	480	18.900			18.900	3.780	7,000	0.126	22.806
									-	-		-	-
									-	-		-	-
									-	-		-	-
									-	-		-	-
									-	-		-	-
									-	-		-	-
									-	-		-	-
									-	-		-	-
									-	-		-	-

Notes:

[1] CCR rating may be in KW. To determine KVA, divide KW by power factor (PF) and CFR efficiency (EF) based on full load. Obtain PF and EF from manufacturer.

[2] To determine KVA for steady burning lights by summing "[no. of fixtures] x [lamp wattage] / 1000" for all lights on circuit. Steady burning lights can be runway edge lights, threshold/end lights, centerline lights, touchdown zone lights, taxiway edge and centerline lights, and approach lights.

[3] Determine KVA for signs based on manufacturer rating or specified limit VA for each size and length (modules or width) of sign on circuit.

[4] Other loads may be pulsing lights such as REIL. Determine KVA based on manufacturer data for each type.

[5] Isolation transformer losses may be estimated at 20%(30/45/65W), 15%(100W) & 10%(200-500W) of connected load. REF. FAA AC150/5345-47.

[6] Determine cable losses based on cable length and manufacturer cable data on conductor resistance. Loss per unit length is typically based on the relationship $I^2R = W$ and assumed PF of unity for the cable. Typical values for cable losses are: 34VA / 300M (34VA / 1,000ft) for 6.6A circuits with uncoated stranded #8AWG conductor, and 196VA / 300M (196VA / 1,000ft) for 20A circuits with uncoated stranded #6 conductor.

TABLE 15-4. AGL Series Circuit Load Calculation Data Sheet Vault E-1710, PHASE 2

CKT No.	Regulator (CCR) (Runway or Taxiway, etc.)	CKT Type (Amps)	Cable Size (AWG)	CCR Rating (kVA) (1)	CCR Input (V)	Steady burning light load (kVA) (2)	Sign load (kVA) (3)	Other loads (kVA) (4)	Total Connected Load (kVA)	Transformer Losses (kVA) (5)	Cable Length (M or FT)	Cable Losses (kVA) (6)	Calculated CCR load (kVA)
	RUNWAY 6-24 EDGE CIR. 1	20	6	50	480	31.128	7.150		38.278	7.656	35,000	0.630	46.564
	RUNWAY 6-24 EDGE CIR. 2	20	6	50	480	31.128	7.150		38.278	7.656	35,000	0.630	46.564
	RUNWAY 6-24 C/L CIR. 1	20	6	20	480	18.212	-		18.212	3.642	34,000	0.612	22.466
	RUNWAY 6-24 C/L CIR. 2	20	6	20	480	18.212	-		18.212	3.642	34,000	0.612	22.466
									-	-		-	-
									-	-		-	-
									-	-		-	-
									-	-		-	-
									-	-		-	-
									-	-		-	-
									-	-		-	-
									-	-		-	-

Notes:

(1) CCR rating may be in KW. To determine KVA, divide KW by power factor (PF) and CFR efficiency (EF) based on full load. Obtain PF and EF from manufacturer.

(2) To determine KVA for steady burning lights by summing "[no. of fixtures] x [lamp wattage] / 1000" for all lights on circuit. Steady burning lights can be runway edge lights, threshold/end lights, centerline lights, touchdown zone lights, taxiway edge and centerline lights, and approach lights.

(3) Determine KVA for signs based on manufacturer rating or specified limit VA for each size and length (modules or width) of sign on circuit.

(4) Other loads may be pulsing lights such as REIL. Determine KVA based on manufacturer data for each type.

(5) Isolation transformer losses may be estimated at 20%(30/45/65W), 15%(100W) & 10%(200-500W) of connected load. REF. FAA AC150/5345-47.

(6) Determine cable losses based on cable length and manufacturer cable data on conductor resistance. Loss per unit length is typically based on the relationship I^2R = W and assumed PF of unity for the cable. Typical values for cable losses are: 34VA / 300M (34VA / 1,000ft) for 6.6A circuits with uncoated stranded #8AWG conductor, and 196VA / 300M (196VA / 1,000ft) for 20A circuits with uncoated stranded #6 conductor.

APPENDIX B: PRODUCT DATA

AGSF

Incandescent Airfield Guidance Sign

FAA

INC

Compliance with Standards

FAA: L-858Y, L-858R, L-858L, and L-858B
AC 150/5345-44 (Current Edition). ETL Certified.

Uses

FAA L-858Y(L)	Direction, Destination, and Boundary (Informational Sign)
FAA L-858R(L)	Mandatory Sign
FAA L-858L(L)	Runway/Taxiway Location Sign: These signs are designed to guide pilots to a particular point on the field, identify holding positions, identify taxiway and runway intersections, and prohibit aircraft entry into designated areas.
FAA L-858B(L)	Runway Distance Remaining Sign: The L-858B is used at 1,000-foot intervals adjacent to the runway edge in order to provide runway distance remaining information to pilots during takeoff and landing operations.

Sign Legends

Type	Purpose	Legend Color	Background Color
L-858Y	Direction, Destination & Boundary	Black	Yellow
L-858R	Mandatory Sign	White with Black Outline	Red
L-858L	Runway/Taxiway Location	Yellow	Black
L-858B	Runway Distance Remaining	White	Black

Features

- Unique illumination system creates a highly uniform distribution of light, eliminating hot spots and shadows, resulting in a much more readable sign and improved visibility, leading to safer runways and taxiways
- Unlike conventional signs, ADB guidance signs are more uniformly illuminated and brighter, providing optimal pilot visibility under all weather conditions regardless of the type of aircraft being operated
- Low-energy/long-life halogen lamps are 48 W with a rated lamp life of 1,500 hours and an actual lamp life in excess of 6,000 hours, leading to a reduction of ongoing maintenance costs and periodic relamping expenses
- Lamps are the same as used on F-Range in-pavement lights, minimizing spare parts needs
- Uses fewer legs than conventional signs and 50% fewer anchor bolts per leg. Number of legs = N + 1, with N being the number of modules.

Features (Continued)

- One of the lowest installation costs in the industry. Reduced number of legs and two-hole flanges minimize installation labor.
- Thinnest sign width of all the major sign manufacturers (9.39 inches) minimizes size of concrete pad required.
- Sign is shipped pre-assembled with mounting hardware and tethers (when supplied) and is ready for installation upon arrival.
- No need to open sign for common maintenance activities. Lamps can be replaced from the top without tools.
- Unique low volt/amp, high power factor active ballast for outstanding energy-efficient operation on tungsten-halogen Style 2 and 3 signs. Same electronics used for both Style 2 and 3 signs.
- Sign color legible at night from more than 800 feet
- Distortion-free flat legend panels
- Retroreflective sheeting is used on all legend panels to increase visibility. Aircraft lights will illuminate sign face if lamp out occurs.
- Modular construction allows for easy panel replacement
- Multi-length continuous legend panels available
- Panel dividers not required for contiguous messages. Panel dividers normally used only on sign message arrays.
- Bolted structure allows easy field repairs and refurbishing, reducing repair costs for damaged and aging signs
- Corrosion-resistant sign construction requires minimal maintenance (aluminum housing and stainless steel hardware)
- Legend and blank acrylic sign panels are easily removable and interchangeable
- Backup lamp option available; lamps switch on automatically (Style 2 & 3 signs)
- Optional lamps-out indicator is visible even if power is off
- Optional high-wind speed sign is available for those locations where wind speed is higher than FAA specification value. Any sign can be converted to a high-wind speed version
- An optional fluorescent sign is available. These signs use 18 W lamps with a rated lamp life of 10,000 hours.

Sign Load & Transformer Requirements

In the table below, the number for the total VA load imposed on the CCR represents the actual load imposed on the regulator and accounts for power factor and load imposed by the L-830 transformer.

Low VA Halogen Lamps					
Sign Size	**No. of Modules**	**Transformer**	**No. of Lamps**	**Sign Power Factor**	**Volt Amp VA Load**
48 Watt Lamps—Style 2, 3-Step Signs (4.8 - 6.6 A)					
1	1	100 W	1	0.98	106
1	2	200 W	2	0.99	155
1	3	300 W	3	0.98	202
1	4	300 W	4	0.99	250
2, 3	1	200 W	2	0.99	155
2, 3	2	300 W	4	0.99	250
2, 3	3	500 W	6	0.98	340
2, 3	4	300 W (2)	8	0.97	450
4	1	300 W	4	0.99	250
5	1	200 W	2	0.99	155
48 Watt Lamps—Style 3, 5-Step Signs (2.8 - 6.6 A)					
1	1	200 W	1	0.97	105
1	2	300 W	2	0.98	145
1	3	500 W	3	0.98	190
1	4	500 W	4	0.98	233
2, 3	1	300 W	2	0.98	145
2, 3	2	500 W	4	0.98	233
2, 3	3	500 & 300 W	6	0.98	350
2, 3	4	500 W (2)	8	0.97	440
4	1	500 W	4	0.98	233
5	1	300 W	2	0.98	145
48 Watt Lamps—Style 5 Signs (5.5 A					
1	1	45 W*	1	0.99	48
1	2	100W	2	0.99	96
1	3	200 W	3	0.99	144
1	4	200 W	4	0.99	192
2, 3	1	100 W	2	0.99	96
2, 3	2	200 W	4	0.99	192
2, 3	3	300 W	6	1.00	288
2, 3	4	500 W	8	0.98	384
4	1	200 W	4	0.99	192
5	1	100 W	2	0.99	96

* Substitute 65 W transformer when implementing an LED retrofit kit.

Sign Load & Transformer Requirements

In the table below, the number for the total VA load imposed on the CCR represents the actual load imposed on the regulator and accounts for power factor and load imposed by the L-830 transformer.

Fluorescent Lamps					
Sign Size	**No. of Modules**	**Transformer**	**No. of Lamps**	**Sign Power Factor**	**Volt Amp VA Load**
18 Watt Lamps—Style 2, 3-Step Signs (4.8 - 6.6 A)					
1	1	200 W	1	0.96	68
1	2	200 W	2	0.95	88
1	3	200 W	3	0.93	106
1	4	200 W	4	0.93	127
2, 3	1	200 W	2	0.95	88
2, 3	2	200 W	4	0.93	127
2, 3	3	300 W	6	0.92	172
2, 3	4	300 W	8	0.93	203
4	1	200 W	4	0.93	127
5	1	200 W	2	0.95	88
18 Watt Lamps—Style 3, 5-Step Signs (2.8 - 6.6 A)					
1	1	200 W	1	0.96	68
1	2	200 W	2	0.95	88
1	3	200 W	3	0.93	106
1	4	300 W	4	0.93	127
2, 3	1	200 W	2	0.95	88
2, 3	2	300 W	4	0.93	127
2, 3	3	500 W	6	0.92	172
2, 3	4	500 W	8	0.89	199
4	1	300 W	4	0.93	127
5	1	200 W	2	0.95	88
18 Watt Lamps—Style 5 Signs (5.5 A)					
1	1	100 W	1	0.96	57
1	2	100 W	2	0.95	77
1	3	100 W	3	0.93	96
1	4	200 W	4	0.93	116
2, 3	1	100 W	2	0.95	77
2, 3	2	200 W	4	0.93	116
2, 3	3	200 W	6	0.92	158
2, 3	4	300 W	8	0.93	192
4	1	200 W	4	0.93	116
5	1	100 W	2	0.95	77

Environmental Conditions

Class	Operating Temperature Range	Humidity	Wind[2] Velocities
1	-4 °F to +131 °F (-20 °C to +55 °C)	0 to 100%	225 mph
2[1]	-40 °F to +131 °F (-40 °C to +55 °C)	0 to 100%	225 mph

[1] All halogen signs are Class II.

[2] ADB Mode 2 signs withstand wind velocities up to 225 mph. ADB Mode 3 (high wind) signs withstand wind velocities up to 327 mph.

Electrical Supply

Informational, mandatory and location signs are available in three sizes. The runway distance remaining signs are available in two sizes. The signs are connected to a series circuit using the appropriately-sized 50 or 60 Hz L-830 isolation transformer(s).

Sign Size No.	Quartz Halogen, 6.6 A, 48 W Lamps Required	Fluorescent, 6.6 A 18 W Lamps Required
1	1 per Module	1 per Module
2	2 per Module	2 per Module
3	2 per Module	2 per Module
4	4 only	4 only
5	2 only	2 only

Installation

Each sign is furnished complete with mounting flanges for installation on a concrete pad, which is the recommended method of installation. Stake mounting option is available. Refer to ADB sign instruction manual for typical sign installations. Contact the ADB Sales Department for more information on sign installation hardware.

1. L-823 Cord Set
2. Cable Clamp
3. Floor Flange
4. 2-inch Conduit Elbow (contractor supplied)
5. L-867 Blank Cover Plate with Gasket
6. L-823 Extension Cord (purchased separately)
7. L-867 Base (purchased separately)
8. L-867 Base Plate (special - purchased separately)

Remote Mounting

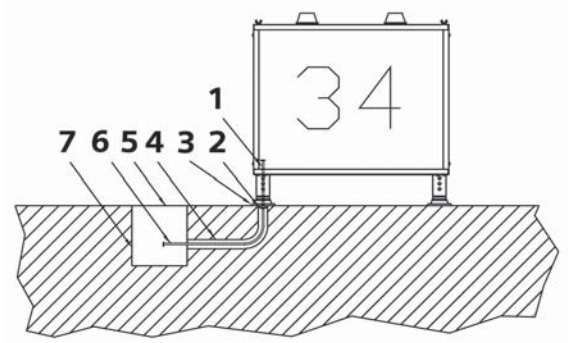

Direct Mounting

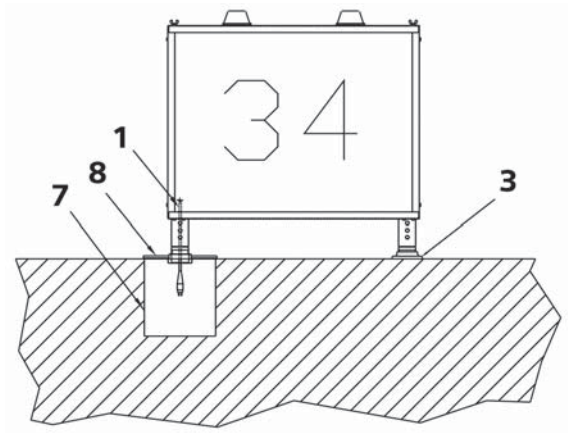

L-858 Sign LED Retrofit Kits for ADB Signs

Application

A retrofit kit is available to convert any existing ADB Airfield Solutions FAA incandescent tungsten-halogen or fluorescent sign to an LED light source. The kit is available for all FAA Types: L-858Y, L-858R, L-858L and L-858B; all Sizes: Size 1 through 5; and all module lengths: up to 4 modules. Retrofitting a sign is fast and easy. It typically takes 20 minutes to retrofit a 2-module sign. The retrofit process converts the sign to the same type as an existing ADB ETL-Certified sign.

Reduced Maintenance Costs

An LED sign virtually eliminates runway shutdowns due to the long life LED light source. It eliminates re-lamping expenses and reduces on-going maintenance costs. The LED optical design also creates a highly uniform distribution of light, eliminating hot spots and shadows. Also, the sign provides for improved safety because there is only a low, regulated DC voltage inside sign.

Energy Savings

An LED sign provides greatly reduced energy consumption compared to existing types of signs. See chart below for more information.

The LED sign operates on ferroresonant or thyristor CCRs that are designed in compliance with FAA requirements. The sign electronics are designed to operate on all steps of a 3-step or 5-step CCR and on a 5.5 A CCR.

See LED sign load chart on data sheet 3006 - AGSF-L for sign loading and optimum sign transformer size. Note that the existing larger size transformer, if present, can be reused. Ask for Service Bulletin ALN158 for details on how to retrofit the sign.

LED Retrofit Kit for ADB Signs Ordering Code

94A0628-[ ][ ]0

Size
1 = Size 1
2 = Size 2
3 = Size 3
4 = Size 4
5 = Size 5

Number of Modules
1 = 1 module
2 = 2 modules
3 = 3 modules
4 = 4 modules

LED and Halogen Sign Comparison Table

Sign Size	Style	No. of Modules	Isolation Transformer Size Required	LED Max. CCR VA Load*	Tungsten Halogen Max CCR VA Load*	Energy Savings
2,3	Style 2 (3-step)	3	500 W for T-H 100 W for LED	100	340	71%
1	Style 3 (5-step)	4	500 W for T-H 150 W for LED	100	233	57%

* CCR Load includes both sign and isolation transformer load.

Dimensions

Sign Heights						
Type	**Sign Size No.**	**Sign Face Height in (cm)**	**Legend Height in (cm)**	**Sign Style No.**	**Sign Class No.**	**Overall Mounting Height in (cm)**
L-858Y/R/L	1 1	18 (45.7)	12 (30.5)	2,3,5 2,3,5	1,2 1,2	29.7 (75.5)
L-858Y/R/L	2 2	24 (61)	15 (38.1)	2,3,5 2,3,5	1,2 1,2	35.7 (90.8)
L-858Y/R/L	3 3	30 (76.2)	18 (45.7)	2,3,5 2,3,5	1,2 1,2	41.7 (106)
L-858B	4 4	48 (122)	40 (101.6)	2,3,5 2,3,5	1,2 1,2	58.2 (147.8)
L-858B	5 5	30 (76.2)	25 (63.5)	2,3,5 2,3,5	1,2 1,2	41.7 (106)

Sign Lengths - Inches (Centimeters)				
Size No.	**1 Module**	**2 Module**	**3 Module**	**4 Module**
1	29.4 (75)	58.6 (149)	87.9 (223)	117.2 (298)
2	35.9 (91)	71.6 (182)	107.4 (273)	143.2 (364)
3	42.4 (108)	84.6 (215)	126.9 (323)	169.2 (430)
4	47.9 (122)	N/A	N/A	N/A
5	42.4 (108)	N/A	N/A	N/A

Notes

- Sign depth is 9.39 in (23.85 cm).
- See our website for additional dimension and installation information.

Packaging Data

Signs are shipped with L-823 cord set(s), frangible couplings, and floor flanges–ready for installation.

	Gross Weight[1]		Carton Dimensions	
Description	**(lb)**	**(kg)**	**(in)**	**(cm)**
Size 1, Module 1	46	21	34 x 34 x 13	87 x 86.4 x 33
Size 1, Module 2	78	35	34 x 63 x 13	87 x 160 x 33
Size 1, Module 3	115	52	34 x 92 x 13	87 x 234 x 33
Size 1, Module 4	169	77	34 x 121 x 13	87 x 307 x 33
Size 2, Module 1	71	32	40 x 40 x 13	102 x 102 x 33
Size 2, Module 2	104	47	40 x 76 x 13	102 x 193 x 33
Size 2, Module 3	153	70	40 x 112 x 13	102 x 285 x 33
Size 2, Module 4	220[2]	100[2]	40 x 147 x 13	102 x 374 x 33
Size 3, Module 1	81	37	46 x 46 x 13	117 x 117 x 33
Size 3, Module 2	131	60	46 x 89 x 13	117 x 226 x 33
Size 3, Module 3	199	90	46 x 131 x 13	117 x 333 x 33
Size 3, Module 4	252	114	46 x 173 x 13	117 x 440 x 33
Size 4, Module 1	122	56	62 x 52 x 13	158 x 132 x 33
Size 5, Module 1	81	37	46 x 46 x 13	117 x 117 x 33

Notes

[1] Weights listed are for halogen signs. Contact ADB for high wind speed sign weights.

[2] Estimated weight

Ordering Code

S [ ] [ ] [ ] - [ ] [ ] [ ] [ ] [ ] [ ] [ ]

Lamp Type
H = Halogen
W = High Wind/Halogen[1]
F = Fluorescent[4]
N = High Wind/Fluorescent[1,4]

Sign Size
1 = Size 1 (1 lamp per module)
2 = Size 2 (2 lamps per module)
3 = Size 3 (2 lamps per module)
4 = Size 4 (4 lamps only)
5 = Size 5 (2 lamps only)

Module
1 = 1 Module
2 = 2 Module
3 = 3 Module
4 = 4 Module

Style
1 = Low VA Halogen Style 2 & 3 (3- & 5-Step)
2 = Low VA Halogen Style 5 (5.5 A)
3 = Fluorescent Style 2 (3-Step), Style 3 (5-Step) & Style 5 (5.5 A)[3,4]

Face
1 = Single
2 = Double

Total Number of Panels
X = To be determined by ADB Sales Department based on legend and module configurations.

Backup Lamps
0 = 18 W fluorescent without backup lamps[4]
1 = 48 W halogen without backup lamps
2 = 48 W halogen with backup lamps

Power
1 = Power through leg without ON/OFF switch
2 = Power through leg with ON/OFF switch
3 = Power through side without ON/OFF switch[4]
4 = Power through side with ON/OFF switch[4]
5 = Customer-provided entry without ON/OFF switch[2,4]
6 = Customer-provided entry with ON/OFF switch[2,4]
9 = Power through bottom without ON/OFF switch[4]
A = Power through bottom with ON/OFF switch[4]

Tether
0 = No tether[4]
1 = One tether on one end of sign
2 = Two tethers, one on each end
3 = One tether per leg

Lamps Out Indicator (Halogen Only)
0 = Without
1 = With

Sign Ordering Code Notes

- Customer to provide legend information and power connection side. It is important to match power cord exit location with legend side.

[1] Use high wind signs in those locations where actual wind speed exceeds FAA specifications (Mode 3). High wind signs tested to a minimum wind load of 327 mph as recommended by FAA technical paper DOT/FAA/AR-TN00/32: Evaluation of Wind-Loading on Airport Signs. High wind signs require four anchor bolts per floor flange except Size 1, which uses the standard 2-bolt foot.

[2] Cord set coiled up inside side. Customer provides entry hole.

[3] Backup lamps and lamps out features are not available.

[4] Not ETL Certified

Ordering Codes

Legend Panel Replacement 44A6084-

Size
1 = Size 1
2 = Size 2
3 = Size 3 and 5
4 = Size 4

Number of Modules
1 = 1 module
2 = 2 modules

Panel Type
1 = With legend (retroreflective)
2 = Black

Sign Type
0 = Standard
1 = Hi-Wind

Legend Panel Divider Assembly 44A6173-

Size
1 = Size 1
2 = Size 2
3 = Size 3 and 5

Paint Coverage
A = Solid (black only)1
C = Clear (paint top only)

Paint Color
R = Red
Y = Yellow
B = Black1

Notes
[1] For option A (solid), customer must select option B (black). Option C (clear) can be paired with either red or yellow.

Optional Lamps-Out Indicator Kit

Part Number — **94A0373**

Note: Used to add lamps-out indicator on existing tungsten-halogen signs.

Construction

Corrosion-resistant sign construction requires minimal maintenance.

- Aluminum housing
- Acrylic sign legend panels
- Stainless steel hardware
- Retroreflective sheeting
- Translucent plastic panel dividers used between multi-module legend panels

Spare Components

Description	Part No.
Cover Kit, On/Off Switch[1]	94A0649
Mounting flange (2-bolt)	62A2142
Mounting flange, high wind speed (4-bolt)	62A2146
Optical bracket assembly, without optional lamp	44A6527-1
Optical bracket assembly, with optional lamp	44A6527-2
Optional On/Off Switch	45A0456
Panel support assembly, Size 1	44A6172-1
Panel support assembly, Size 2	44A6172-2
Panel support assembly, Size 3 and 5	44A6172-3
Panel support assembly, Size 4	44A6172-4
Tether	94A0054

Notes
[1] Contains a weatherproof cover, template and hardware to put a cover over the On/Off switch.

Halogen Spare Components

Description	Part No.
Capacitor, 5-step, std. VA sign (1 and 2 lamps)[1]	20A0036
Capacitor, 5-step, std. VA sign (4, 6, or 8 lamps)[1]	20A0035
Cord set, L-823	73A0107-72
Frangible coupling, size 1	60A2678-10
Frangible coupling, size 2	60A2678-20
Frangible coupling, size 3 or 5	60A2678-30
Frangible coupling, size 4	60A2678-40
Halogen sign power supply assembly[2]	44A7156-200
Lamp, 48 W, 6.6 A, halogen	2990.40.827
Sign active ballast assembly, low VA signs (8 lamps)[3]	44A6225
Sign active ballast assembly, low VA signs (4 lamps)[3]	44A6225-4
Sign rectifier assembly, Size 1, 2, 3, and 5[3]	44A6251-1
Sign rectifier assembly, Size 4[3]	44A6251-2
Transformer, 5.5-6.2 A (Style 5 Signs)	35A0455
Transformer, 3-step, standard VA signs (all lamps)	35A0635
Transformer, 5-step, standard VA signs (1 & 2 lamps)	35A0644
Transformer, 5-step, standard VA signs (4, 6, or 8 lamps)	35A0642

Notes
[1] No capacitor needed for 3-step signs.
[2] Does not include PCB drip shield cover.
[3] For all signs shipped before May 2013, use these spare parts.

Fluorescent Spare Components

Description	Part No.
Fluorescent sign ballast, one-lamp[1]	35A0687-1
Fluorescent sign ballast, two-lamp[1]	35A0687-2
Fluorescent sign optical bracket	60A2953
Fluorescent sign power supply	44A6631
Fluorescent sign, diffuser, panel retainer	63A1039
Fluorescent sign, Size 1-3, diffuser panel	63A1042-X
Fluorescent sign, Size 1-3, bottom diffuser panel	63A1056-XX
Lamp, 18 W, fluorescent	48A0376

Notes
[1] If you need to replace a fluorescent sign ballast, please refer to Manual 96A0286 before placing an order.

ADB Airfield Solutions
Leuvensesteenweg 585
B-1930 Zaventem
Belgium

Telephone: +32 (0)2 722.17.11
www.adb-air.com

ADB Airfield Solutions, LLC
977 Gahanna Parkway
Columbus, OH 43230
USA

Telephone: +1 614.861.1304
+1 800.545.4157

© ADB Airfield Solutions
All rights reserved

Product specifications may be subject to change, and specifications listed here are not binding. Confirm current specifications at time of order.

ETE-CB

Incandescent Elevated Taxiway Edge Light

MEDIUM-INTENSITY, CLAMP BAND

INC

Compliance with Standards

FAA: L-861T AC 150/5345-46 (Current Edition). ETL Certified.

Uses

FAA L-861T	Used to delineate the edges of airport taxiways.

Features

- Multiple lamp wattages and types (6.6 A quartz or 6.6 A incandescent) available
- Single-latch, stainless steel clamping band allows easy removal of lens for lamp changes
- Lamp Life: Rated at 1,000 hours at 6.6 A
- A gasket is used between the lens and the head assembly to form a tight seal
- Three screws allow a 4° leveling adjustment of the fixture after installation
- Fixture comes standard with a 1.5-inch coupling, but is available with a 2-inch coupling and in alternative thread patterns
- Fixture uses aluminum head assembly, stainless steel hard- ware, and is protected with aviation yellow enamel paint

Operating Conditions

Temperature: -40 °F to +131 °F (-40 °C to +55 °C)

Wind: Withstands wind velocities up to 300 mph (480 kph)

Inside View

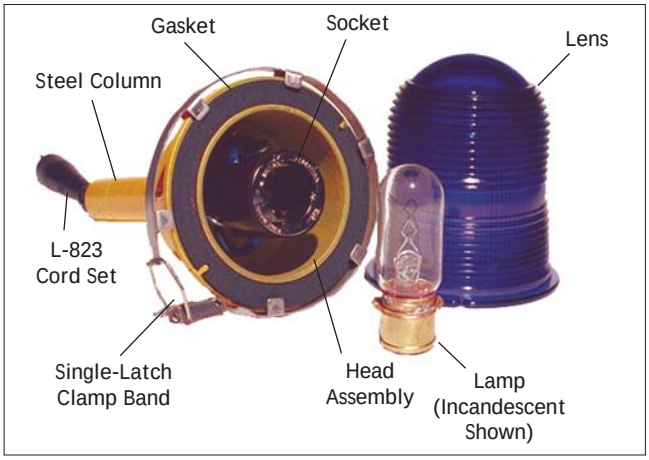

Ordering Code

44C1081-

Lamp
1 = 30 W/6.6 A Incandescent[2]
2 = 45 W/6.6 A Incandescent[2]
3 = 25 W/120 VAC, Incandescent[2]
5 = 30 W/6.6 A Quartz (ETL Certified)
6 = 45 W/6.6 A Quartz[2]
7 = No Lamp, Incandescent Socket
8 = No Lamp, Quartz Socket

Lens Color
0 = No lens[1]
5 = Omnidirectional Blue (ETL Certified)[3]

Fixture Height
11 = 14 in (35.6 cm) with 1.5” coupling, 12 TPI
22 = 24 in (61.0 cm) with 1.5” coupling, 12 TPI
33 = 30 in (76.2 cm) with 1.5” coupling, 12 TPI
44 = 20 in (50.8 cm) with 1.5” coupling, 12 TPI
1A = 14 in (35.6 cm) with 2” coupling, 11 TPI[4]

Notes
[1] No lens option normally used as spare part. Specify and order lens separately.
[2] Lamp not certified
[3] 30 W Quartz
[4] Normally used in metric applications

Packaging

Assembled Fixtures	Dimensions of Cartons		Indiv. Weight
	Individual in (cm)	9/Box in (cm)	
14-inch OAH	6.5 x 6.5 x 20.5 (17 x 17 x 52)	19.5 x 19.5 x 20.5 (50 x 50 x 52)	5 lb 2.3 kg
24-inch OAH	6.5 x 6.5 x 31 (17 x 17 x 79)	19.5 x 19.5 x 31 (50 x 50 x 79)	6.25 lb 2.8 kg
30-inch OAH	6.5 x 6.5 x 37 (17 x 17 x 94)	19.5 x 19.5 x 37 (50 x 50 x 94)	7 lb 3.2 kg

Spare Components

Description	Part No.
Column, (steel) 6” (15.24 cm) for 14” OAH	62A0007-6
Column, (steel) 16” (40.64 cm) for 24” OAH	62A0007-16
Column, (steel) 22” (55.88 cm) for 30” OAH	62A0007-22
Cord set, quartz	44A1701
Cord set, incandescent	44A1707
Frangible coupling, 1.5 inch, 12 TPI	62B0073
Frangible coupling, 1.5 inch, 12 TPI, with slot[1]	62B0461
Frangible reducer coupling, 2-1 inch, 11.5 TPI	61A0281
Frangible reducer coupling, 2-1 inch, 11 TPI[2]	61A0350
Gasket	63B0015
Head assembly with phenolic socket	44B1079-1X
Head assembly with quartz socket	44B1484-1X
Lamp, 25 W/120 VAC	48A0008
Lamp, prefocus, 30 W/6.6 A	48A0006
Lamp, prefocus, 45 W/6.6 A	48A0007
Lamp, quartz, 30 W/6.6 A (ETL Certified)	48A0085
Lamp, quartz, 45 W/6.6 A	48A0083
Lamp socket, phenolic for incandescent	49A0002
Lamp socket, quartz	49A0032
Lamp base	62A2150
Lamp bracket (quartz lamp socket)	60C1169
Lens, blue	63A0151
Lens clamp assembly	44B0023

[1] Slot across threaded end allows easy replacement of broken frangible coupling

[2] Normally used in metric applications

Product specifications may be subject to change, and specifications listed here are not binding. Confirm current specifications at time of order.

ADB Airfield Solutions
Leuvensesteenweg 585
B-1930 Zaventem
Belgium

Telephone: +32 (0)2 722.17.11
www.adb-air.com

ADB Airfield Solutions, LLC
977 Gahanna Parkway
Columbus, OH 43230
USA

Telephone: +1 614.861.1304
+1 800.545.4157

© ADB Airfield Solutions
All rights reserved

Fig. 1: UEL-1-150

Approach, Threshold Runway End High Intensity Elevated Light

Type UEL

ADB
Airfield Solutions

Compliance with Standards

FAA: AC150/5345-46 and E982 for mechanical & environmental properties, photometry to E-2325, E-2628 and E-2698, latest edition

ICAO: Annex 14, Volume I, para. 5.3.4, 5.3.10, and 5.3.11, for use in Cat. I, II and III conditions, edition 1999

IEC: IEC 61827

NATO: STANAG 3316

Fig. 2: Approach

Uses

1. Precision approach lighting Cat. I, II and III, white and red
2. Threshold and threshold wing bar lighting Cat. I, II and III
3. Runway end lighting Cat. I, II and III
4. Supplementary stop bar lights Cat. I, II and III
5. Other applications for unidirectional lights
6. Flashing light head, in conjunction with a FCU cabinet

Features

- Low weight (1.7 kg including lamp) construction thanks to the use of synthetic material, UV- and high temperature resistant.
- Reduced dimensions for improved frangibility characteristics and resistance against jet blast and wind load.
- Comfortable lamp changing without tools, either on site or in maintenance base, thanks to swinging and removable front cartridge.
- Low power and long life lamps: 1000 hours, 150 W only for approach, threshold and threshold wing bar, 100 W for runway end and 45 W for stop bar.
- Cable mechanically protected inside the fixture; built in stress reliever.
- Front glasses, clear or coloured, optimized for the different functions. No separate colour filters.
- Mounts straight onto standard 2" gas conduit (60 mm O.D.), breakable coupling or frangible mast head.
- Stable adjustment in elevation achieved by readily accessible, lockable adjustment screws.
- Easy aiming, even on top of a mast, by means of dedicated setting devices available either in an electronic or in a simplified, spirit-level version (Fig. 7).
- Maintenance-free construction and design.
- Also available with an additional medium intensity – low intensity omni directional approach light on top (see Fig. 3).

Fig. 3: UEL-1-150 with top light

Construction (see Fig. 5)

1. Front glass/reflector seal
2. Front glass
3. Reflector
4. Removable front cartridge, aluminum alloy, containing the lamp and all optical components
5. Optical cartridge gasket
6. Prefocus halogen lamp
7. Cable stress reliever
8. Main (rear) housing with slip fitter, UV resistant plastic material
9. Elevation adjustment screws
10. Bracing clamp with screw

Finish

- Front cartridge: aviation yellow painted
- Main body: black, temperature and UV-resistant synthetic material
- Stainless steel hardware
- Temperature resistant wiring, gasket and front glass

Characteristics

- UV-resistance: tested in a Weather-O-Meter per ASTM 23 & 26 for more than 2000 hrs
- Degree of protection: IP 43

Electrical Supply

From a 6.6 A series circuit, through a suitably rated isolating transformer (see catalogue leaflet A.06.110). Use a 2-core 2.5 mm^2 or (AWG 12) silicon rubber insulated cable between the transformer and the light.
For flashing system: see catalogue leaflet A.02.620.

Installation

- At ground level on 60 mm O.D. breakable coupling (Fig. 6)
- On a 60 mm O.D. aluminium conduit up to 2 m high with breakable coupling MR/F2 (Fig. 7) (See catalogue leaflet A.05.110)
- On top of any safety approach mast having a 60 mm O.D. mounting interface (Fig. 7)

Packing Data

- UEL-1-150 complete with glassware, without lamp, cable nor breakable coupling, net weight: 1.7 kg.
- UEL-1-150 in cardboard box: 30 x 21 x 22 cm, gross weight: 2.0 kg.

Fig. 4: Outline Dimensions

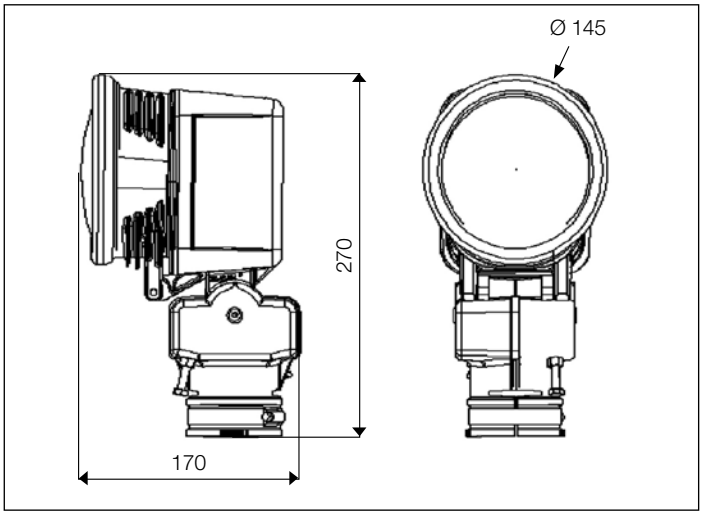

Fig. 5: Exploded view UEL

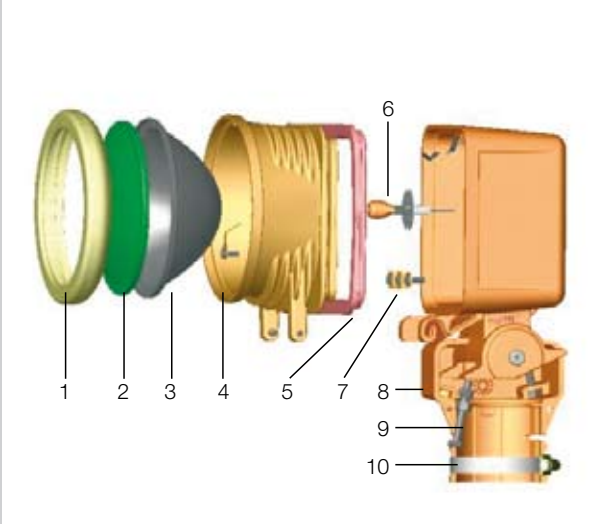

Ordering Code*

UEL 1 150 C 2 Y 0 xxxx

Unidirectional = 1

Lamp power
- 120 W (flashing light) = 120
- 45 W (suppl. stop bar) = 045
- 100 W (runway end) = 100
- 150 W (other applic.) = 150

Beam colour
- White = C
- Green = G
- Red = R

For mounting on
- Ground (with sec. cable) = 0
- Pole or mast (no cable) = 2

Finish (aluminium)
- Aviation yellow = Y

Low intensity top light
- Without = 0
- With = 1

Special requirements to be specified in full text

Accessories

Adjustment tools (vertical and horizontal) (see Fig. 8):

With clinometer using electronic sensors	1570.05.400
With clinometer using spirit level	1570.05.410

* Complete, delete or modify as necessary.

Note: Extension cables, conduits, connector kits, breakable couplings, frangible masts, … need to be ordered separately. For assistance, please contact ADB.

Fig. 6: UEL steady burning light on base plate

Fig. 7: UEL flashing light on mounting tube

Fig. 8: UEL with top light and levelling tool

Photometric Performance (typical data)

Lamp specification: prefocus halogen - PK 30d - 6.6 A - 1000 hours rated life at full intensity.
Max. power rating: 150 W

Function	Lamp (W)	Colour	Curve	Avg Int. (cd)	Beam spread (Main ellipse)	
					Horizontal	Vertical
Approach Centre Line	150	White	Fig. 9	22 108	-10 to +10	2 to 13
Approach Side row	150	Red	Fig. 10	6 921	-5 to +9	3 to 13
Threshold	150	Green	Fig. 11	19 075	-2 to +9	2 to 11
Threshold Wing bar	150	Green	Fig. 12	17 929	-5 to +9	2 to 13
Runway End	100	Red	Fig. 13	5 322	-6 to +6	0.2 to 4.5
Supplem. Stop bar	45	Red	Fig. 14	309	-10 to +10 (rectangle	1 to 8 (rectangle)

Fig. 9: Approach Centre line

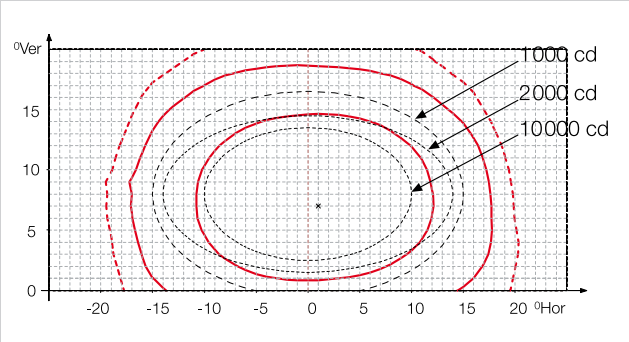

Fig. 10: Approach Side Row

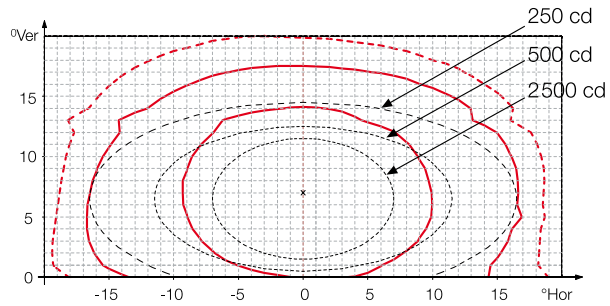

Fig. 11: Threshold

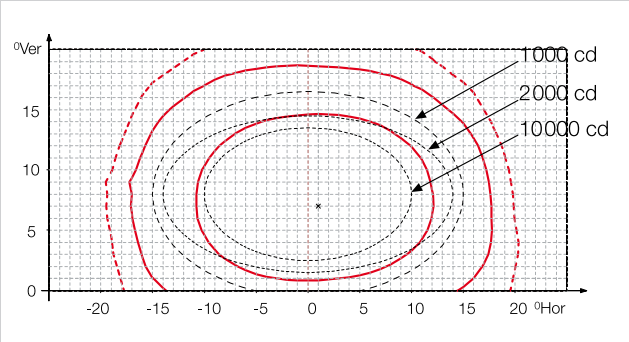

Fig. 12: Threshold Wing Bar

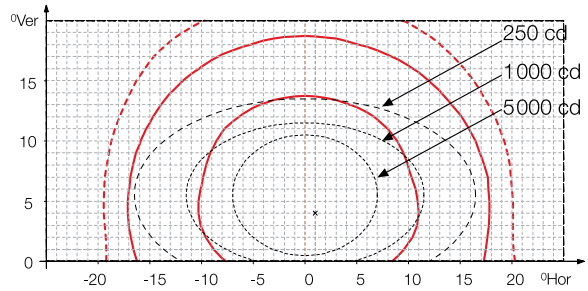

Fig. 13: Runway End

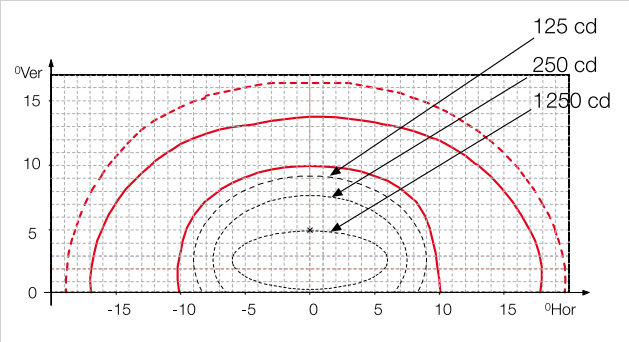

Fig. 14: Supplementary Stop Bar

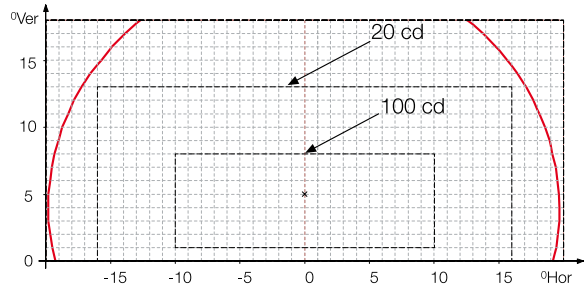

Suggested Specification

The elevated unidirectional approach, threshold and/or runway end, or supplementary stop bar high intensity elevated light, or flashing light shall be in compliance with ICAO Annex 14, Volume I, for use in Cat. I, II and III.
The light unit shall meet the approach, threshold and threshold wing bar photometric specifications with a lamp of 150 W max. For the runway end and the supplementary stop bar lights the lamp power will be limited to respectively 100 W and 45 W only. The expected lamp life shall not be less than 1000 hours at full intensity (3 600 000 flashes for the flashing lamp).

The design and construction shall take the main mechanical requirements of FAA AC 150/5345-46 and E-982 specification into account. The weight of the light unit, including lamp and glassware shall not exceed 1.7 kg. In order to improve its frangibility and resistance against jet blast or wind load, the front area surface of the fitting will be as low as possible.

The fitting shall include a hinged and removable front optical cartridge to facilitate maintenance and relamping either on site or in the maintenance base. The optical components shall be housed in an optical cartridge held together and sealed by just one gasket. No readjustment of the light fixture shall be needed afterwards. No tools shall be required for dismantling and reassembling the optical cartridge or for relamping.

The optical system shall consist of a high purity aluminium reflector, a tungsten halogen or xenon discharge lamp and a front glass appropriate to its function. Separate colour filters outside the fitting shall be prohibited.

The design of the fitting shall allow to mechanically protect the supply cable over its complete run from transformer to lamp. A cable stress reliever shall be included to avoid traction on the lamp wires.

The light design shall allow its installation either at ground level on a breakable coupling, on any conduit or safety (frangible) mast with a 60 mm O.D. mounting interface. Fixation on this support shall require only one screw.

All components shall be made out of temperature and UV-resistant material, suitably protected against corrosion. Plain stainless steel hardware shall be used throughout.

The elevation setting shall be easy, and shall remain stable in time by making use of two lockable adjustment screws, working in opposition.

The protection degree of the fitting shall be min. IP 43 or better.

The light unit shall be available, combined with a low intensity omni-directional light to form a high intensity – low intensity system.

Registered Office:

ADB
Airfield Solutions
Leuvensesteenweg 585
B-1930 Zaventem
Belgium

Phone: +32 (2) 7221711
Fax: +32 (2) 7221764
info.adb@adb-air.com
www.adb-air.com

www.comith.be

ADB
Airfield Solutions

© ADB
all rights reserved
order number DOCA02630EV3
subject to modifications

ERL

Elevated Runway Light

Compliances:

FAA AC 150/5345-46: L-861 Series
ICAO Annex 14
UFC 3-535-01
USN NAVAIR 51-50AAA-2
NASAO Guidelines
STANAG

Applications

The ERL Model 5 is used as a medium intensity runway edge light, taxiway edge light, medium intensity threshold light, and heliport perimeter light for both constant current and voltage circuits.

Features

- ETL Certified (As listed in Table 1 only)
- Clamp band for globe
- Single piece die-cast aluminum body
- Adjustable height
- Frangible coupling for stake, baseplate, or junction box mounting
- Prismatic globe
- Full range of standard aviation color globes
- Constant current or voltage operation available
- Prefocused quartz halogen or incandescent lamps available
- Available with 1.5 inch or 2 inch frangible coupling

Ordering Information

How to Order: A complete assembly will consist of separate order items for the ERL fixture, stake or baseplate with base or junction box with cover, isolation transformer, and L-823 connector kit.

Taxiway edge lights are typically blue (-B); threshold/end lights are typically green/red (-GR); heliport lights are typically yellow (-Y).

Example: 40938-CY-45-24 is a 24 inch high fixture with a clear/yellow globe and 45 watt quartz bi-pin lamp.

4 0 9 _ _ - _ _ - _ _ _ - _ _ - _ _ _ _

Fixture Type:
- 38 = Quartz/Bi-Pin
- 39 = Incandescent/Medium Prefocus
- 43 = Incandescent/Medium Screw (E27)

Color:
- C = Clear
- B = Blue
- G = Green
- R = Red
- Y = Yellow
- X = Opaque/Blank

Lamp Wattage:
- 30 = 30 watt lamp
- 40 = 40 watt lamp
- 45 = 45 watt lamp
- 69 = 69 watt lamp
- 100 = 100 watt lamp
- 116 = 116 watt lamp

Height in Inches:
- 14 = Standard height 14 inches
  Available in 2 inch increments to 30 inches.
- 10 = 10 inches (not ETL certified)

Option:
- MC2 = Metal Frangible Coupling 2 Inch
- S227 = Pk30d 45W Lamp for ICAO applications

Table 1

Type	Part Number	Color	Lamp Wattage	Lamp Type	Lamp P/N
L-861	40938	Clear	45W/6.6A	Tungsten-Halogen / Bi-Pin	40732
	40938	Clear/Yellow	45W/6.6A	Tungsten-Halogen / Bi-Pin	40732
	40939	Clear	45W/6.6A	Incandescent	10047-1497
	40939	Clear/Yellow	45W/6.6A	Incandescent	10047-1497
L-861E	40938	Red/Green Red/Red Blank/Green	45W/6.6A	Tungsten-Halogen / Bi-Pin	40732
	40939		45W/6.6A	Incandescent	10047-1497
L-861T	40938	Blue	30W/6.6A	Tungsten-Halogen / Bi-Pin	40737
	40938	Blue	45W/6.6A	Tungsten-Halogen / Bi-Pin	40732
	40939	Blue	30W/6.6A	Incandescent	10047-1493
	40939	Blue	45W/6.6A	Incandescent	10047-1497

Other Lamps Available

Lamp/ Socket	Lamp Rating	Lamp Style	Lamp P/N
40939	40W/120VAC	Incandescent	10047-608
40943	40W/120VAC	Incandescent	10047-1636
40943	69W/120VAC	Incandescent	10047-1558
40943	116W/120VAC	Incandescent	10047-2993
40943	100W/240VAC	Incandescent	10047-2145
40938	45W/6.6A	Tungsten-Halogen/Pk 30d	10047-2137
40938	100W/6.6A	Tungsten-Halogen/Pk 30d	10047-2138
40939	45W/6.6A	Incandescent	10047-1497

Installation Drawings

Dimensions:	Inches (mm)
Instruction Sheets:	8627 (40938) 8628 (40939) 8803 (40943)
Shipping Weight:	3.0 lbs. 1.4 kg.
Shipping Volume:	0.1 cu. ft. .003 m^3

Photometric Data: Contact Field Services

Stake Mounted ERL

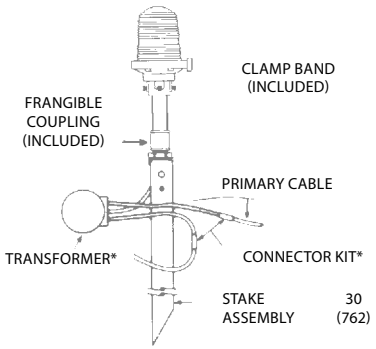

Base Mounted ERL

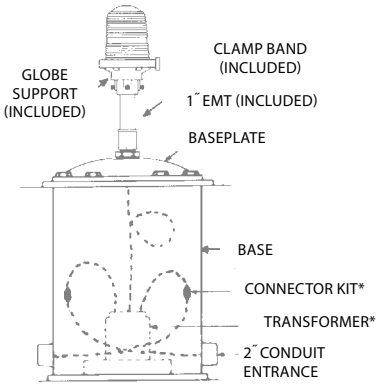

* Constant Current Only

Note: All ERL 6.6A versions include a lead with L-823 plug. All ERL 120v versions have wire leads without con-

Accessories

Description	Catalog Number	Shipping Weight lb.	Shipping Weight kg.	Shipping Volume cu. ft.	Shipping Volume cu. m.
Base L-867, class I, 24˝ deep	AC21242H200301	52	23.6	2.6	0.074
Baseplate, 1.5˝ Hub, Painted Steel	AP1935	8	3.6	0.14	0.004
Baseplate, 2˝ Hub, Painted Steel	AP1932	8	3.6	0.14	0.004
Connector Kit L-823, 8 AWG, 0.32˝ to 0.43˝ O.D.	823KP-D4-D4				
Junction Box & Cover	AW7609/AW7805	12	5.4	0.2	0.006
Stake Assembly, 1.5˝ HUB	AW2205	8	3.6	0.2	0.006
Stake Assembly, 2˝ HUB	AW2202	8	3.6	0.2	0.006
Transformer L-830-1, 6.6/6.6A	See Transformer Section				
Transformer L-830-2, 20/6.6A	See Transformer Section				
Leveling Tool	40999				

Renewal Parts

Description	Part Number	Description	Part Number
1˝ EMT Extension (14˝ Standard)	40878-2P	Lead Assembly 14˝ Fixture (40938)	40918
1˝ EMT Extension (24˝)	40878-7P	Lead Assembly 14˝ Fixture (40939)	50582
1˝ EMT Extension (30˝)	40878-10P	Lead Assembly 24˝ Fixture (40938)	40918-4
Clamp Band	50107	Lead Assembly 24˝ Fixture (40939)	50582-4
Blue Globe – Glass (45W Fixtures)	50122-B-45	Lead Assembly 30˝ Fixture (40938)	40918-7
Blue Globe – Glass (30W Fixtures)	50122-B-30	Lead Assembly 30˝ Fixture (40939)	50582-7
Clear Globe – Glass	50122-C	O-Ring Seal	10035-37
Clear/Red Globe – Glass	50122-CR	Set Screw–Socket (40938)	10H27-013D08
Clear/Yellow Globe – Glass	50122-CY	Set Screw–Socket (40939)	10H27-013D20
Red/Green Globe – Glass	50122-RG	Socket (40938)	40749
Red Globe – Glass	50122-R	Socket (40939)	KL6168
Yellow Globe – Glass	50122-Y	Socket (40943)	10047-1559
Frangible Coupling – Aluminum 1.5 Inch	50186	Socket Mounting Bracket (40938)	40937
Frangible Coupling – Aluminum 2 Inch	50184		
Globe Support Assembly (40938)	50034*		

* Non Arctic Kit model only

HRLQ-5

High Intensity Runway Light/Quartz

Compliances:

FAA AC 150/5345-46: L-862 and L-862-E
ICAO ANNEX 14: Fig. A2-9

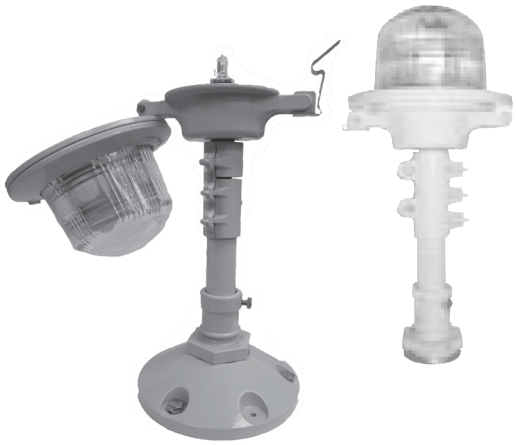

Applications

The HRLQ-5 High Intensity Runway Light is used for elevated runway edge lighting and elevated threshold and end lighting.

Features

- ETL certified
- Requires no tools to relamp – fixture hinges open for lamp access and ease, and is held shut by a spring clip
- Easy to level – unique swivel design allows fixture to be leveled by loosening and tightening one exterior fastener
- Easy to change filters – twist in place allowing beam color to be field adjustable (LH and RH toe-in) on standard "edge" lights and on blue/clear displaced threshold "edge" lights
- 300 MPH wind tested
- Modular design
- Uses a 6.6A quartz bi-pin lamp
- Die cast aluminum housing painted yellow
- Available in heights from 14-30 inches
- Airbus 380 approved
- Standard 2" threaded frangible coupling

Ordering Information

8 6 2 5 - ___ - ___ - ___

Fixture type:

HRLQ model:

Application and beam color:
(See "YYY", Table 1)

Height in inches:
Standard height 14 inches; available in 2 inch increments to 30 inches maximum

Options:
1 = 1.5"-12 UNF threaded coupling (standard is 2"-11.5 NPSM)
2 = 200W lamp in place of 120W or 150W, FAA L-862 (not available for blue color edge lights)
3 = Level adjustment lever in place of standard hex socket cap screw
5 = 150W lamp in place of 120W, FAA L-862
EX = Extra strength fixture (high wind/heavy snow)*

*Options 1 and 3 not available with EX option.

NOTE: All glass will have inherent variations in color. Allowing for this, all Crouse-Hinds series products are certified to meet FAA requirements.

Table 1

YYY	Application	Beam color	Specification number (FAA)	Min. lamp wattage
ECC	Edge, standard**†	Clear/clear	L-862	150
ECY	Edge, standard, LH**†	Clear/yellow	L-862	150
EYC	Edge, standard, RH**†	Yellow/clear	L-862	150
ECR	Edge, LH, displaced end**	Clear/red	L-862	150
ERC	Edge, RH, displaced end**	Red/clear	L-862	150
ERY	Edge, LH, displaced end	Red/yellow	L-862	150
EYR	Edge, RH, displaced end	Yellow/red	L-862	150
TCG	Edge, RH, displaced threshold	Clear/green	L-862	200
TGC	Edge, LH, displaced threshold	Green/clear	L-862	200
TYG	Edge, RH, displaced threshold**	Yellow/green	L-862	200
TGY	Edge, LH, displaced threshold**	Green/yellow	L-862	200
TRG	Threshold/end, RH**	Red/green	L-862E	200
TGR	Threshold/end, LH**	Green/red	L-862E	200
TXG	Displaced threshold, RH**	Blank/green	L-862E	200
TGX	Displaced threshold, LH**	Green/blank	L-862E	200
SRR	End (straight beam)**	Red/red	L-862E	200
SRX	End (straight beam)	Red/blank	L-862E	200

**Indicates FAA approved to AC 150/5345-46.
†Must select option 5, as 120W is no longer available.

RH = Right hand;
LH = Left hand; see Figure A for light beam directions
E = Runway edge light;
T = Runway threshold light;
S = Runway end light

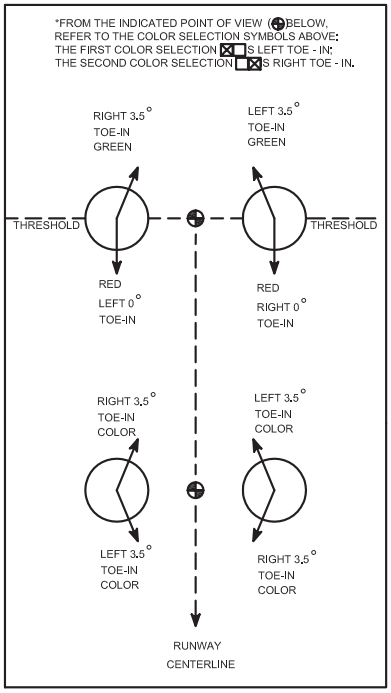

EATON CROUSE-HINDS SERIES

Instruction Sheet:	2016
Shipping Weight:	4.5 lbs. 2.0 kg.
Shipping Volume:	0.31 cu. ft. 0.009 m^3

Outline Drawing

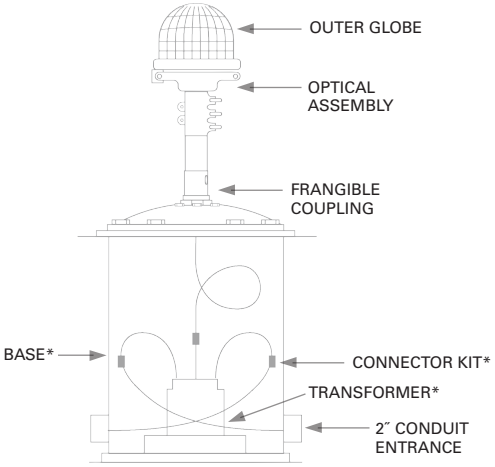

*Order separately.

Typical Photometric Data

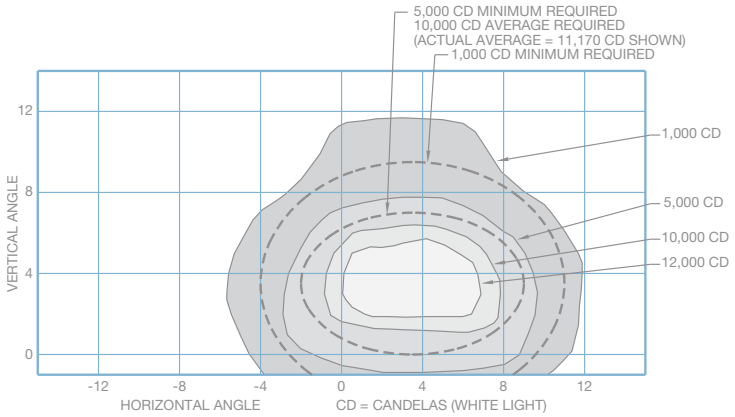

L-862 High Intensity Runway Light, 120W Clear

Accessories

		Shipping weight		Shipping volume	
Description	**Catalog number**	**lbs.**	**kg.**	**cu. ft.**	**cu. m.**
Base L-867, Class I, 24″ deep	AC2124H200301	52	23.6	2.60	0.074
Baseplate, 1.5″ hub, painted steel	AP1935	8	3.6	0.14	0.004
Baseplate, 2″ hub, painted steel	AP1932	8	3.6	0.14	0.004
Connector kit L-823, 8 AWG stranded, 0.32″ to 0.43″ O.D.	823KP-D4-D4				
Lamp extractor	50420				
Leveling fixture	50359				
Transformer	See transformer section				

Renewal Parts

Item description	Catalog number	Item description	Catalog number
Clear outer globe (for “ECC,” “ECY,” “EYC” applications)	50344-C	Clear inner filter half (two required on units with clear, blank or colored outer globe)	50360-C
Clear/green outer globe (for “TCG” and “TYG” applications)	50344-C/G	Gasket	50351
Clear/red outer globe (for “ECR” and “EYR” applications)	50344-C/R	Globe gasket	40989
Blank/green outer globe (for “TXG” applications)	50344-X/G	Filter spring	50366
Green/blank outer globe (for “TGX” applications)	50344-G/X	Frangible coupling 2″ aluminum	50184
Filter green/clear outer globe (for “TGC” and “TGY” applications)	50344-G/C	Frangible coupling 2″ aluminum – EX option	60683-E
Green/red outer globe (for “TGR” applications)	50344-G/R	Lamp, 120W, 6.6A, bi-pin	20058
Red outer globe (for “SRR” applications)	50344-R	Lamp, 150W, 6.6A, bi-pin	40925
Red/blank outer globe (for “SRX” applications)	50344-R/X	Lamp, 200W, 6.6A, bi-pin	20172
Red/clear outer globe (for “ERC” and “ERY” applications)	50344-R/C		
Red/green outer globe (for “TRG” applications)	50344-R/G		
Yellow inner filter half	50360-Y		

FAA-L-824 Type B Airport Lighting Power Cable

Single conductor / 8, 6 and 4 AWG / 5000 volt / EPR insulation / PVC jacket

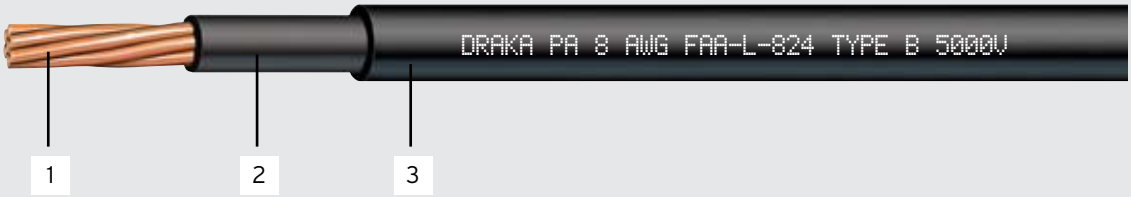

Applications

These are single conductor 5000 volt nonshielded power cables suitable for underground installation for use as airport lighting circuits per FAA L-824 Type B and listed in the FAA AC 150/5345-53 Appendix 3. They are rated for use at 90°C in dry conditions.

FAA L-824 cables are suitable for use in conduit, duct, aerial and direct burial installations up to 5000 volts. The PVC jacket offers additional protection from de-icing fluids.

Draka's airport lighting cables have been certified as 100% Buy American by the FAA.

Features

1. CONDUCTOR

Class C, soft drawn bare copper stranded to ASTM B3 & B8.

2. INSULATION

Ethylene Propylene Rubber (EPR) compound in accordance with ICEA S-96-659 / NEMA WC71.

3. JACKET

PolyVinyl Chloride (PVC) compound in accordance with ICEA S-96-659 / NEMA WC71.

Ratings and Approvals

FAA Advisory Circular 150/5345-7E

Airport Lighting Equipment Certification Program per AC150/5345-53 Appendix 3 Underground Electrical Cable for Airport Lighting Circuits per spec L-824

ICEA S-96-659 / NEMA WC71

FAA-L-824 Type B Airport Lighting Power Cable

Single conductor / 8, 6 and 4 AWG / 5000 volt / EPR insulation / PVC jacket

Part Number	Conductor Size	Stranding	Insulation Thickness mils (mm)	Jacket Thickness mils (mm)	Approximate Cable O.D. In (mm)	Cable Weight Lbs/Mft (Kg/Km)
388270-S	8 AWG	7	90 (2.3)	30 (0.76)	0.420 (10.7)	121 (180)
388271-S	6 AWG	7	90 (2.3)	30 (0.76)	0.460 (11.7)	160 (238)
388xxx	4 AWG	7	90 (2.3)	30 (0.76)	0.505 (12.8)	219 (326)

Optional features include jacketed constructions: 1) Crosslinked polyethylene (XLPE) insulation with a PVC jacket, and 2) Ethylene propylene rubber (EPR) insulation with a CPE jacket.

The data herein is approximate and subject to normal manufacturing tolerances.

Information is subject to change without notice. Consult factory for a variety of alternate constructions for specific applications.

IND FAADOT10 1010

Draka Engineered Specialties
22 Joseph E. Warner Blvd. | North Dighton, MA 02764 | Tel +1-508-822-5444
761 Joseph E. Warner Blvd. | Taunton, MA 02780 | Tel +1-508-822-5444
One Tamaqua Blvd. | Schuylkill Haven PA 17972 | Tel +1-570-385-4381

www.drakausa.com

For sales and technical information, contact:
Draka Engineered Specialties | 1-800-233-3190 | 1-570-385-4381 | 1-570-385-1092 fax | www.drakausa.com

COOPER Crouse-Hinds

RCLN

Runway Centerline Light – Navy

Compliances:
U.S. Navy NAVAIR 51-50AAA-2

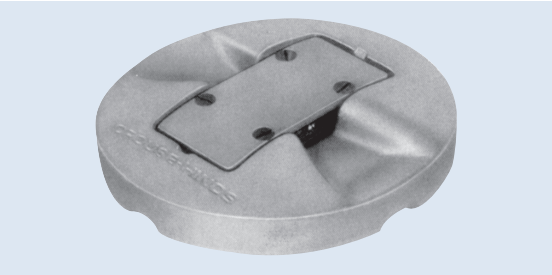

Applications

The RCLN has been designed to meet the harsh environment of military runway centerline lighting where tail hooks may be present. These lights come with an extra- strength stainless steel base and thick top optical assembly. The optical assembly houses the lamp, filters and lenses required to form the proper light beam. Lights are available in four types for various installation requirements.

Features

- Removeable optical high-strength ductile iron cartridge
- Variety of mounting choices.
- Hardened stainless steel base for tail hook resistance.
- Zinc plating on stainless steel base for maximum corrosion resistance.
- Meets U.S. Navy requirements.
- Optional metallic-ceramic coating for increased corrosion resistance.

Ordering Information

How to order: Select the basic catalog number. Add suffixes for filter, lamp type and options (if any).

Example: 18749-RC is a bidirectional L-852N Type 5 light with red filter on one side and with the other side clear. The lamp with film disc cutout is furnished with this light.

_ _ _ _ _ – _ _ – _ _

Fixture Type:
18749 Type 5
20324 Type 6
20381 Type 7
20382 Type 8

Filter Code:
C = Clear
R = Red

Options:
65 = 65 W Lamp (45 W standard)
CR = Corrosion Resistant Coating (Optical Assembly only)
NF = Lamp Without Film Disc Cutout

Accessories

Description	Catalog Number	Specification	Shipping Weight Lbs.	Shipping Weight Kg	Shipping Volume Cu.Ft.	Shipping Volume Cu.M.
Transformer, 30/45 W, 6.6/6.6 A	33001-2	MS27289-1	8.0	3.6	0.2	0.006
Transformer, 30/45 W, 6.6/6.6 A	33001	FAA L-830-1	8.0	3.6	0.2	0.006
Transformer, 65 W, 6.6/6.6 A	33003	FAA L-830-3	9.0	4.0	0.1	0.006
Connector Kit – Refer to data sheet ET-8.1						
Type 7 Base, Size A, 10” diameter L-868	AC15242H200003**		43.0	20.0	2.1	0.06
Spacer Ring, 3/4” thick (10”)	AF5102-12		6.0	2.7	0.043	0.001
Type 8 Base, Size B, 12” diameter L-868	AC24242H200003**		63.0	29.0	2.5	0.10
Spacer Ring, 3/4” thick (12”)	AF5402-12		7.25	3.3	0.06	0.002

** Other bases, such as sectional type, may be required, depending on method of installation.

Typical Photometric Data

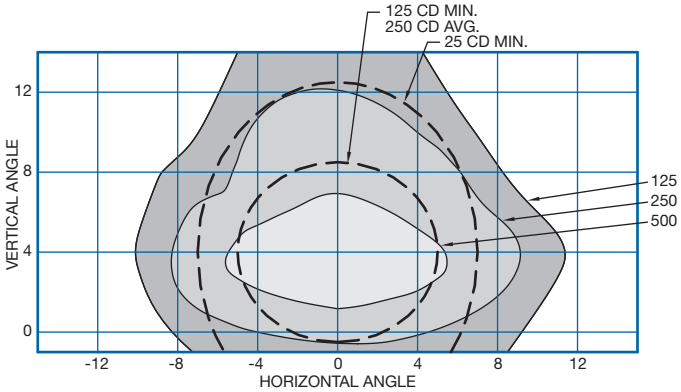

RCLN – Clear Filter / CD AVG: 538 / MAX/AVG: 1.46

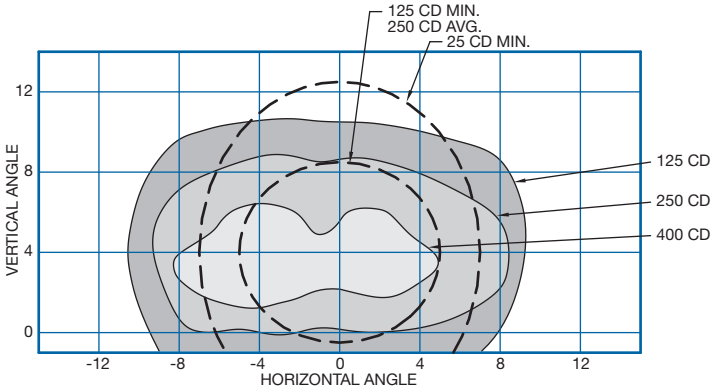

RCLN – Red Filter / CD AVG: 394 / MAX/AVG: 2.34

Dimensions:	inches (mm)
Instruction Manual:	8005
Shipping Weight:	12.0 lbs. 5.44 kg
Shipping Volume:	.3 cu.ft. .01 cu.m.

OutlineDrawings

Type 5

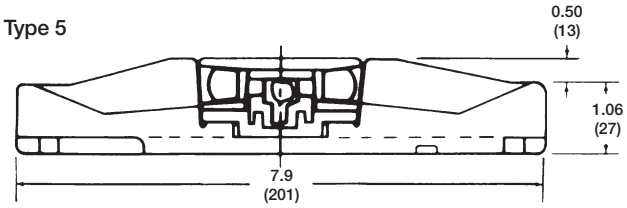

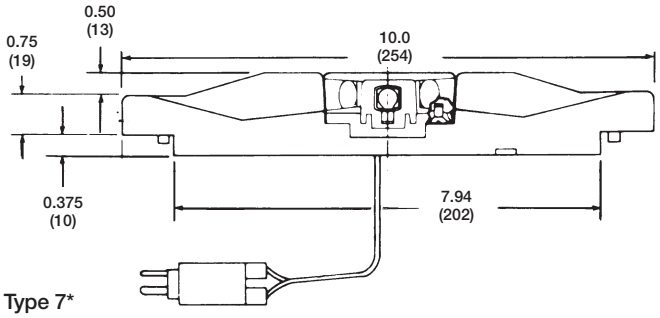

Type 7*

Type 6

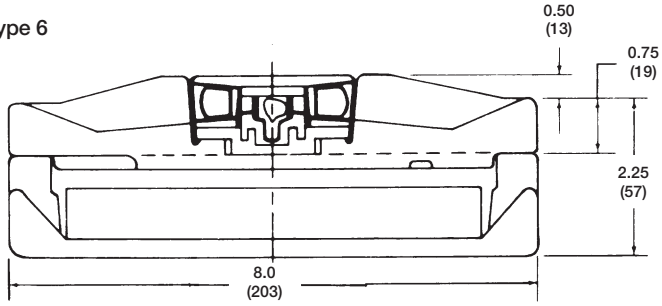

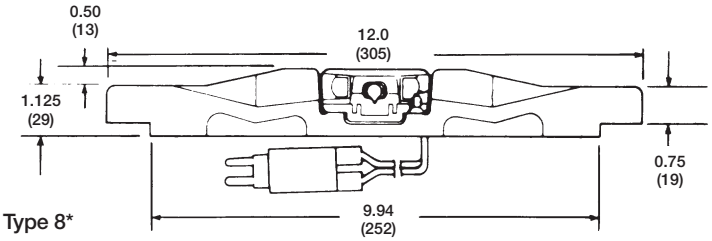

Type 8*

* For FAA shallow or deep base mounting.

Renewal Parts

Part Number	Description	Part Number	Description
19899	Housing/Lens Assembly	85203-5-F	Optical Base/Lamp Assembly
19241	Gasket	18448	Sleeve – Waterproofing
19848	Screw – High-Strength Mounting Blk. Oxide	19694	Socket Assembly
19463	Filter Spring	19695	O-Ring – Optical Assembly
20654-R	Filter, Red	19313-3	Lead Assembly
19900-XX	Optical Assembly (Add Colors)	20936-**	Lamp assembly (45 W)
		19484-**	Lamp assembly (65 W)

** Insert “F” for lamp with film disc cutout (standard) or “NF” for lamp without film disc cutout (optional).

THIS PAGE INTENTIONALLY LEFT BLANK

APPENDIX C: FORM E-1

Energy Analysis Form (E-1)

Constr Contr No.: _____
Project No.: P- _____ FY: _____
Project Title: _____
Location: _____

A&E Firm: _____
Person to Contact (Name): _____
Telephone No.: _____
FAX No.: _____
Email Address:

Energy Analysis Program (check one):

- ○ BLAST
- ○ Carrier EC 20-II HAP
- ○ DOE 2.1
- ○ Trane Trace-Ultra
- ● Other. Indicate: EXCEL SPREADSHEET (provide documentation)

Building Information

Estimated Cooling: N/A (tons) (W) **No. of Zones:** N/A
Design Energy Budget: N/A (Btu/sf/yr) (MJ/sm/yr)
Building Floor Area: N/A (sf) (sm)
Zone Descriptions: (attach annotated floor plan)

THE AIRFIELD LIGHTING ENERGY ANALYSIS IS BASED ON THE COMPARISON OF THE EXISTING INCANDESCENT LIGHTING TO THE PROPOSED INCANDESCENT LIGHTING. THERE IS NO CHANGE IN THE ENERGY CONSUMPTION, SINCE THERE IS A ONE FOR ONE REPLACEMENT OF THE LIGHTS.

Study Alternatives

Alternatives (Describe energy saving alternatives; list equipment, energy source electric, etc)	FOR NAVFAC MIDLANT USE ONLY			
	*A	*AN	*D	Remarks
#1 EXISTING INCANDESCENT LIGHTS FOR RUNWAY EDGE LIGHTING AND CENTERLINE LIGHTS - ESTIMATED LOAD 206,458 WATTS.				
#2 PROPOSED INCANDESCENT LIGHTS FOR RUNWAY EDGE LIGHTING AND CENTERLINE LIGHTS - ESTIMATED LOAD 206,458 WATTS.				
#3				
#4				

* "A" - Approved; "AN" - Approved as Noted; "D" - Disapproved & Resubmit

This completed and signed formed must be included in the "Basis of Design".

NAVFAC MIDLANT Approved : Name: _____ Date: _____

APPENDIX D STORMWATER DESIGN ASSUMPTIONS

APPENDIX D – Stormwater Design Assumptions

Patuxent River NAS
Storm Drainage Improvements

Basis of Design – Phase 3
Runway Storm Drain Crossings of Runway 6-24

General

1. CCTV results do not agree with aerial mapping portrayal of structures and ID numbers. Numerous structures were found during performance of CCTV work and structure ID numbers were assigned. The location of structures found as a result of CCTV investigation has not been added to the mapping. Recommend that the Navy have their consultant make these revisions to improve the usefulness and clarity of the CCTV investigation results.

Crossing #1 – Runway Station 253+00

Existing Condition

- Upstream structure PAX 000917. This manhole collects drainage from drain system west of the structure.
- Downstream structure identified as PAX 001190 located on the south side of the runway.
- Pipe is identified as 30″ DIP. No problems identified by CCTV inspection.
- CCTV investigation found a new manhole approximately 27′ downstream of PAX 000917 and identified it as PAX 0100064. This structure is located at the edge of the runway north shoulder and was picked up by field survey.
- CCTV inspection from PAX 0100064 towards PAX 001190 found an unidentified manhole at 405′ downstream. This structure is identified as PAX 0100065.
- The pipe segment between PAX 0100064 and PAX 01000605 is 30″ RCP with no indication of problems/deterioration in the pipe per CCTV report results.
- The pipe downstream of PAX 0100065 is 30″ DIP.
- The location and extent of the 30″ RCP beneath the runway agrees with the storm drain replacement identified in the 1993 runway repair drawings.

Recommendation

- The 30″ storm drain beneath the runway appears to be in good condition based on CCTV results.
- Since other pipe segments replaced as part of the 1993 runway repair project are showing signs of deterioration it is recommended that the 30″ pipe segment between structures PAX 0100064 and PAX 01000605 be repaired by installation approximately 360′ of cured-in-place pipe liner as a preventive measure.

Crossing #2 – Runway Station 258+00

Existing Condition

- No information regarding existing condition. This pipe run does not show up on the CCTV plan.
- It's possible that the upstream structure is PAX 000915 but this can't be verified.
- CCTV results for the pipe run starting at upstream structure PAX 000915 state the pipe run is 54" CMP and terminates at a new structure identified as PAX 0100051, 225' downstream of PAX 000915. This location generally agrees with a manhole picked up by field survey.
- There are no CCTV inspection results for the storm drain segment beneath the runway.
- The 1993 runway repair drawings identify replacement of the existing storm drain in this section with new 30" RCP.
- Manholes north and south of the runway which define the limit of previous storm drain replacement were picked up by survey but do not show up on the CCTV inspection plans.

Recommendation

- Perform cleaning and CCTV inspection of the existing 30" or larger RCP at this location to determine pipe condition.
- Limits of inspection from unidentified manhole on north side of runway to unidentified manhole on south side of runway.
- Total length of pipe section to be inspected approximately 400'.
- Repair pipe as necessary based on results of the inspection.

Crossing #3 – Runway Station 271+00

Existing Condition

- Upstream structure is PAX 000906. Located approximate 250' north of runway shoulder.
- The downstream structure is identified as PAX001020 which is located approximately 280' south of the runway shoulder. The location for this structure as shown on the CCTV plan is incorrect.
- CCTV investigation found a new manhole approximately 214' downstream of PAX 000906 and identified it as PAX 0100050. This structure is approximately 45' north of the runway shoulder and was picked up by field survey.
- The pipe run between PAX 000906 and PAX 0100050 is 48" RCP with no indication of problems.
- CCTV investigation was attempted for the storm drain segment beneath the runway between PAX 0100050 and PAX 001020. CCTV investigation was halted 43' downstream of PAX 0100050 (at approximate edge of north runway shoulder) due to heavy mud accumulation which crawler cam could not travel through.
- There are no CCTV inspection results for the storm drain segment beneath the runway.
- The CCTV results indicate the pipe segment under the runway is 48" RCP.

- The 1993 runway repair drawings identify replacement of the existing storm drain in this section with new 42″ RCP.
- Manholes north and south of the runway which define the limit of previous storm drain replacement were picked up by survey but do not show up on the CCTV inspection plans.

Recommendation

- Perform cleaning and CCTV inspection of the existing 42″ or 48″ RCP at this location to determine pipe condition.
- Limits of inspection from PAX 0100050 on north side of runway to unidentified manhole on south side of runway.
- Total length of pipe section to be inspected approximately 400′.
- Repair pipe as necessary based on results of the inspection.

Crossing #4 – Runway Centerline Station 310+50

Existing Condition

- Upstream structure PAX 001165. Linear inlet channel providing drainage for median area open channel.
- No downstream structure ID shown on CCTV plan, downstream structure identified in CCTV report and assigned ID of PAX 0100046. Downstream structure is located in wooded area south of runway with discharge into existing waterway.
- Pipe is 30″ RCP. No indication that pipe was replaced during 1993 runway improvements contract.
- CCTV report indicates some areas with exposed reinforcement.
- CCTV report indicates roots visible in several locations, likely pipe joints.
- CCTV report indicates increasing water level as pipe nears outfall.
- At approximately 590′ from upstream structure water level in pipe is 25% and turtles and fish are noted in CCTV report
- CCTV investigation terminated at approximately 630′ from upstream structure due to camera submergence.
- No CCTV for final 50′ of pipe to outfall. Assume that outfall pipe is submerged (at least part of the time). Outfall may be under tidal influence.

Recommendation

- Install a 60″ manhole on the existing 30″ storm drain at Station 4+50 (approximately 40′ from edge of runway shoulder).
- Install approximately 450′ of 30″ cured-in-place pipe liner from PAX 001165 to new manhole.
- No repair work planned for remainder of pipe due to static water level and likelihood that outfall is located in wetland and/or tidal waters.

Crossing #5 – Runway Centerline Station 325+00

Existing Condition

- Upstream structure PAX 001163. Linear inlet channel providing drainage for median area open channel.
- No downstream structure ID shown on CCTV plan, downstream structure identified in CCTV report and assigned ID of PAX 0100047. Downstream structure is located in wooded area south of runway with discharge into existing waterway.
- Pipe is 36" RCP. No indication that this pipe was replaced during 1993 runway improvements contract.
- CCTV report does not indicate any structural problems.
- CCTV report indicates infiltration and weepers in several locations.
- CCTV report indicates increasing water level in pipe as camera moved toward outfall.
- At approximately 500' from upstream structure water level in pipe at 25%.
- At approximately 515' from upstream structure water level in pipe submerges camera and CCTV work is halted.
- No CCTV for final 100' of pipe to outfall. Assume that outfall pipe is submerged (at least part of the time). Outfall may be under tidal influence.

Recommendation

- Install a 60" manhole on the existing 36" storm drain at Station 5+00 (southeast of intersection of EMP Towway and runway shoulder, just north of access road).
- Install approximately 500' of 36" cured-in-place pipe liner from PAX 001163 to new manhole.
- No repair work planned for remainder of pipe due to static water level and likelihood that outfall is located in wetland and/or tidal waters.

CROSSING NUMBER	WORK SUMMARY
1	• Install 360' of 30" CIPP liner
2	• Clean and CCTV 400' of 30" RCP storm drain • Repair as necessary – 400' of 30" CIPP liner
3	• Clean and CCTV 400' of 42"/48" RCP storm drain • Repair as necessary – 400' of 42"/48" CIPP liner
4	• Construct new 60" precast MH on 30" storm drain • Install 450' of 30" CIPP liner
5	• Construct new 60" precast MH on 36" storm drain • Install 500' of 36" CIPP liner

APPENDIX E PAVEMENT DESIGN REPORT

REPAIR RUNWAYS 14-32 & 6-24
PHASE 1 (RUNWAY 14-32)
PHASE 3 (RUNWAY 6-24)

at

Naval Air Station Patuxent River
Patuxent River, MD

Pavement Design
Final Report
April 14, 2016

Prepared for:

JOHNSON, MIRMIRAN & THOMPSON
Engineering A Brighter Future®
Philadelphia, PA

Prepared by:

Engineering Technology Research

RDM International, Inc.
(Formerly Roy D. McQueen & Associates, Ltd.)
14310 Sullyfield Circle, Suite 600
Chantilly, VA 20151
Telephone 703-709-2540 • Fax 703-709-2535
www.rdmintlinc.com

TABLE OF CONTENTS

EXECUTIVE SUMMARY ES-1

Table ES-1 Recommended repair options 3

SECTION 1.0 INTRODUCTION 1-1

SECTION 2.0 DESIGN STANDARDS 2-1

2.1 FLEXIBLE PAVEMENT DESIGN CRITERIA 2-1

2.2 RIGID PAVEMENT DESIGN CRITERIA 2-2

SECTION 3.0 DESIGN INPUTS 3-2

3.1 EXISTING STRUCTURES AND SUBGRADE SUPPORT 3-2

table 3-1 Runway 14-32 Boring Results Summary 3-4

table 3-2 Runway 6-24 Boring Results Summary 3-4

table 3-3 Summary of existing structures 3-5

3.2 CHARACTERIZATION OF BASE/SUBBASE LAYERS 3-5

3.3 CONCRETE FLEXURAL STRENGTH 3-6

3.4 TRAFFIC 3-6

Table 3-4 Pavement Design Traffic 3-8

Table 3-5 Light Aircraft 3-9

Table 3-6 Helicopter traffic 3-9

Table 3-7 standard traffic pattern 3-10

SECTION 4.0 DESIGN ANALYSIS AND RESULTS 4-1

4.1 RIGID PAVEMENT DESIGNS 4-1

Table 4-1 PCC Pave ment Requirements 4-3

4.2 FLEXIBLE PAVEMENT DESIGNS 4-3

Table 4-2 AC Pavement Requirements 4-4

Table 4-3 Additional Design for Traffic Area - D 4-5

4.3 RECOMMENDED REPAIR OPTIONS 4-5

Table 4-4 Recommended repair options 4-6

Appendix

A Section Location Map

B Geotechnical Report

C PCASE Design Outputs

D Distress Maps

EXECUTIVE SUMMARY

RDM International, Inc. (formerly Roy D. McQueen & Associates, Ltd.) (RDM) was retained by Johnson, Mirmiran & Thompson, Inc. (JMT) to perform pavement designs for the repair of Runway 14-32 and Runway 6-24 and adjacent taxiways within the proposed project limits at Naval Air Station Patuxent River (NASPR), Patuxent River, MD. According to JMT, the rehabilitation will be executed in two phases, Phase 1 for Runway 14-32 and Phase 3 for Runway 6-24. The repair should be focused on limited work if possible due to budget limits. The designs followed the requirements and procedures outlined in Unified Facilities Criteria, UFC 3-260-02, "*Pavement Design for Airfields*." The computer program, PCASE version 2.09.02, was used for the computations.

Runway 14-32 is approximately 9,740 feet long and 200 feet wide. There is a 700 feet long by 200 feet wide overrun at the Runway 14 end. Runway 6-24 is approximately 11,800 feet long and 200 feet wide. The pavement section map included in a 2013 Pavement Condition Survey (PCI) report is referenced to identify specific pavement sections within the project limits.

The existing pavement structures were obtained from the 2013 PCI report and cores/boring conducted for this project. GET Solutions, Inc. (GET) performed the core/borings. According to GET's report, the upper layer of subgrade soils in Runway 14-32 is generally composed of sands that were classified as silty sands (SM) according to the Unified Soil Classification System (USCS). The upper layer of subgrade soils in Runway 6-24 is generally composed of lean clay (CL). Construction records also indicated similar subgrade soils.

Laboratory Californian Bearing Ratio (CBR) tests were not performed on the subgrade soils. However, the SM soils are generally considered to provide competent support for pavement construction. The CL soil in the Runway 6-24 is under the original asphalt concrete (AC) overlaid PCC pavement (APC). On top of the APC is the another APC structure. The effective subgrade support on top of the original APC can provide competent support for the upper APC structure.

For conservatism, the existing subgrade design CBR is assumed to be 10%. For rigid pavement design, subgrade modulus of reaction, *k*-value of 180 psi/in. was assumed for the rigid pavement design. The CL soils in the EMP and compass rose pads appeared to be weaker than the CL soils in the Runway 6-24 based on blow counts from the Standard Penetration Test (SPT). GET recommended subgrade *k*-value of 125 psi/in. for a slab on grade system. Since the EMP and

compass rose will be reconstructed, the design subgrade *k*-value of 150 psi/in. was considered to be achievable and was used for design.

Aircraft operation data from September 2013 to September 2014 was provided. The provided data was summarized in terms of weights and frequencies. The standard design pattern for the Navy was also considered. The design life is 20 years.

To provide repair options, reconstruction designs of asphalt and Portland cement concrete (PCC) pavements were designed for different traffic areas and corresponding traffic patterns. The resulted pavement structures were compared with the existing pavement sections.

For those sections with very poor condition, PCI less than 40, rehabilitation designs were provided regardless of the existing structural condition.

For Runway14-32, it is indicated in Section 4.0 that the two runway ends of 1,000 feet long each may be structurally inadequate if existing PCC is of poor material quality and weak subgrade. However, the 2013 PCI survey showed that the two runway ends had PCI of above 90 indicating good surface condition. For the 700 psi PCC flexural strength and 250 psi/in. existing subgrade support, the existing 12 inches PCC on eight (8) inches cement treated base (CTB) should be structurally adequate for the standard Navy traffic pattern. In light of this and budget limits, the two runway ends of Runway 14-32 were not recommended major rehabilitation.

Similarly, the blast pads of Runway 6-24 may not be structurally adequate for the design traffic based on operation records. However, they are structurally adequate for the standard Navy traffic pattern. In light of this and budget limits, the blast pads of Runway 6-24 were not recommended major rehabilitation.

Table ES-1 provides repair options for the pavement sections in the project limits. There may be isolated areas that may need reconstruction or deep repair. The recommended sections with PCC or AC reconstruction can be found in Section 4.0. To locate the isolated repair areas and estimate the quantities, distress maps included in Appendix D can be referenced.

TABLE ES-1 RECOMMENDED REPAIR OPTIONS

Section ID	2013 PCI	Existing Structures	Likely Repair Option	Remark
Phase 1, Repair of Runway 14-32				
OA14-1	35	9.5" PCC/subgrade	3" AC on 9" Cracked and Seated PCC	RW 14 overrun
OA14-2	25	1.5" AC/11" PCC/8.5" CTB	3" AC on 8" Lean concrete	RW 14 overrun, middle section
OA14-3^	35	3" AC/5.5" PCC	3" AC overlay on existing 3" AC and 5" PCC	RW 14 overrun, next to RW 14 threshold
R14-1/1A	94/94	12" PCC/8" CTB	12" PCC panel replacement	2,185 feet from RW 14 threshold
R14-3/3A	55/55	9" AC/10" PCC	Variable AC mill and replacement	5,150 feet middle portion of RW 14-32
R14-4/4A	93/91	12" PCC/8" CTB	12" PCC panel replacement	2,410 feet from RW 32 threshold
R20-1	19	10" PCC/subgrade	2" AC on 9" cracked and seated PCC	Current helipad on Runway 20 end
Phase 3, Repair of Runway 6-24				
R06-BP1	94	8" PCC/6" stone base	8" PCC panel replacement	RW 6 blast pad
R06-1/1A	90/94	12" PCC/10" AC/10" PCC/APC	12" PCC panel replacement	1,388 feet from RW 6 threshold
R06-2/2A	63/62	7" AC/9" PCC/APC	Variable AC mill and replacement	9,082 feet middle portion of RW 6-24
R06-3/3A	90/74	14.5" PCC/6" Rubblized PCC/12" AGBS	14.5" PCC panel replacement	1,044 feet from RW 24 threshold
R06-BP2	97	8" PCC/6" stone base	8" PCC panel replacement	RW 24 blast pad
EMP-1	60	12" PCC	15" PCC/6" CTB reconstruction	EMP pad
DCCP-1	0	8" PCC	15" PCC/6" CTB reconstruction	Compass rose pad
^ The repair AC overlay option is based on the thin PCC shown. Further core is necessary to verify the PCC thickness.				
AC mill and replacement may be adequate depending on verified PCC thickness				

SECTION 1.0

INTRODUCTION

SECTION 1.0 INTRODUCTION

Johnson, Mirmiran & Thompson, Inc. (JMT) retained RDM International, Inc. (formerly Roy D. McQueen & Associates, Ltd.) (RDM) to perform pavement designs for the repair of Runway 14-32 and Runway 6-24 and taxiways located within the project limits at Naval Air Station Patuxent River (NASPR) in Patuxent River, MD. According to JMT, the pavement rehabilitation projects will be completed in two phases, Phase 1 for the repair of Runway 14-32 and Phase 3 for the repair of Runway 6-24. In each phase, the intersecting facilities within the lateral clearance zones of the runway and other related facilities may be included. In addition, Phase 3 includes the reconstruction of the Compass Rose off Taxiway D and the EMP site area. The primary objective of the project is to provide pavement rehabilitation options for the repair of the existing pavements within the project limits.

Runway 14-32 is approximately 9,740 feet long and 200 feet wide. There is a 700 feet long by 200 feet wide overrun at the Runway 14 end. Runway 6-24 is approximately 11,800 feet long and 200 feet wide. To facilitate the discussion of the concerned pavement areas, pavement section identifications set up in a 2013 pavement condition survey report are referred. The pavement section map included in the 2013 report is attached in Appendix A.

The military's pavement evaluation and design procedures outlined in the "Unified Facilities Criteria" (UFC) were followed for this project. The UFC 3-260-02, "Pavement Design for Airfields," dated on 30 June, 2001 is being updated and the updated version was used for this project. The procedures covered in the UFC can be accomplished by the computer program, PCASE, which was used for this project.

The technical approach to the pavement analysis and design consisted of the following basic elements:

- **Review of Existing Pavement Structures -** to obtain data on existing pavement structures and surface conditions from the existing records and geotechnical investigation results for pavement evaluation and designs.
- **Traffic Data Processing/Inputs** – to evaluate data on aircraft utilization provided by JMT.
- **Pavement Evaluation and Design Analysis** – to compare the required pavement structures with the existing pavements and provide designs for the rehabilitation.

The report is organized to provide JMT with information on the following:

- Governing Design Standards
- Pavement Design Inputs and Assumptions
- Evaluation of Proposed Repair Options

All analytical procedures utilized for this study conformed to documented military design criteria for airfield pavement design. The observations, comments, and recommendations contained in this report have been prepared for the exclusive use of JMT in accordance with generally accepted engineering practice. No other warranty is expressed or implied. Performance of any engineering investigation is subject to many qualifications inherent to the practice of that profession, and to the accuracy of data obtained.

Although a reasonable effort was made to interpret data and correctly depict existing conditions, variations could exist between tested locations, and the historical documents provided by others could contain discrepancies.

SECTION 2.0

DESIGN STANDARDS

SECTION 2.0 DESIGN STANDARDS

The United States military design criteria and procedures are documented in the "Unified Facilities Criteria (UFC 3-260-02), Pavement Design for Airfields." As of the writing of this report, an updated version of the UFC 3-260-02 is available and will be adopted soon. Therefore, the updated version of the UFC 3-260-02 was referenced for this project.

The updated UFC 3-260-02 reflects the change in design methodology for the Navy and Marine Corps. Thus, it allows the use of PCASE program for all three services, including the Air Force.

To facilitate the computations of the designs, the computer program developed by the military, PCASE (version 2.09.02) was used for this project.

For this project, the functional condition evaluation such as distress survey was completed by others. The functional condition survey results were provided to RDM and were taken into account in the repair designs. RDM also performed distress survey to help determine repair options without further analysis of the data for Pavement Condition Index (PCI) evaluation.

2.1 FLEXIBLE PAVEMENT DESIGN CRITERIA

For the flexible pavement, the combination of the pavement structure must provide sufficient thickness to prevent undesirable settlement from repeated shear deformation in the base, subbase, and subgrade under traffic. Durability of the asphalt concrete (AC) and granular base and subbase materials are achieved through proper mixture designs, gradations, and compaction requirements following applicable UFC specification requirements.

The flexible pavement can be designed using either empirical or mechanistic-empirical design methods included in the UFC. However, the mechanistic-empirical design method requires the inputs of elastic moduli of pavement materials. The elastic modulus of the AC and subgrade will also change depending on seasonal temperature variations. Since varied pavement thicknesses can result for different elastic moduli of the pavement materials, assumptions on elastic moduli need to be made. It is difficult to make these assumptions without laboratory data on local materials. Further, the empirical design method generally provides conservative designs. Therefore, the mechanistic-empirical design method based on layered elastic model was not used for this project.

The empirical design method is based on California Bearing Ratio (CBR) of the subgrade. The flexible pavement is assumed to be composed of AC surface on granular base and subbase. Total

thickness, T1, above the subgrade with design CBR value is computed. The obtained total thickness consists of a minimum AC surface, granular base, and subbase. The required total thickness of the minimum AC and granular base, T2, can be obtained based on the CBR of the subbase using the same procedures for the total thickness above the subgrade. The difference of the T1 and T2 will be the required subbase thickness. The granular base thickness is computed by subtracting minimum AC surface thickness from T2 and compared with the minimum thickness requirement for the base layer.

The required total thickness depends on the design aircraft gross weight and number of passes. If multiple aircraft are considered, the design aircraft is determined as the one that requires the thickest pavement structure above the subgrade. All other aircraft are converted to the design aircraft with increased pass levels. All the computations and conversion are automated in PCASE.

2.2 RIGID PAVEMENT DESIGN CRITERIA

Rigid pavement design is to provide adequate Portland cement concrete (PCC) thickness to prevent premature fatigue cracking at the bottom of the slab for the prescribed design period. Generally, the plain concrete pavement is considered failed if 50% of the slabs in the trafficked area have developed initial cracking on the surface. Load repetitions depend on the tensile stress at the bottom of the PCC imposed by the aircraft traffic and the flexural strength of the PCC.

The tensile stress is calculated at the bottom of the PCC in PCASE using the Westergaard edge-loaded model design method. Subgrade is characterized as a dense liquid foundation using modulus of reaction, *k*-value. When subbase is used, an effective *k*-value is obtained based on subgrade *k*-value, subbase types, and subbase thickness for stress computations.

A 25% load transfer is considered in PCASE at PCC slab joints using dowel bars or aggregate interlock.

SECTION 3.0

DESIGN INPUTS

SECTION 3.0 DESIGN INPUTS

PCASE requires proper user inputs to obtain a meaningful pavement structure. Following guidance provided in UFC 3-260-02, the following user defined inputs are considered essential to Runway 14-32 pavement repair designs:

- Existing pavement structures and subgrade support in terms of the subgrade design CBRs or modulus of reaction (*k*-values),
- Characterization of base/subbase layers,
- Concrete flexural strength (R); and
- Traffic mix by aircraft type, frequency, and operational weight on different parts of the runway.

3.1 EXISTING STRUCTURES AND SUBGRADE SUPPORT

A pavement condition survey report dated March 2013 was provided to RDM for reference. The report provided Pavement Condition Index (PCI) as well as existing pavement structures in terms of materials, layer thicknesses, and subgrade soil information. The section location map included in the March 2013 report was referenced to identify the pavement sections in this project and was included in Appendix A.

In addition to these, pavement core/borings were conducted for this project by GET Solutions, Inc. (GET). GET's preliminary reports were also provided for reference and included in Appendix B.

A total of six (6) pavement borings and seven (7) cores were conducted within the project limits for Phase 1 for the repair of Runway 14-32. A total of 12 pavement borings and 16 cores were within the project limits for Phase 3 for the repair of Runway 6-24. Some of the borings/cores are located in the taxiways or other pavement features within the lateral clearance zones of the two runways. Since the projects are focused on the repair of the two runways, the borings/cores outside the two runways will be used mainly for runway repairs transitions purposes. Summary of the GET's results is presented in Table 3-1 and Table 3-2 with records provided in the March 2013 report.

According to GET's report, the upper layer of subgrade soils is generally composed of sands that were classified as silty sands (SM) or lean clay (CL) according to the Unified Soil Classification

System (USCS). The SM soils were generally found in the borings in Runway 14-32 while the CL soils in Runway 6-24. Construction records also indicated similar subgrade soils. The top portion of the SM soils was shown to have varying amounts of gravel, which may be the subbase used in the past.

Laboratory CBR test values were not performed on the subgrade soils. However, the SM soils are generally considered to provide competent support for pavement construction. In Runway 6-24, the existing pavement structures generally consist of two each AC overlaid PCC (APC) structures with each on top of the other. The effective subgrade support for the upper APC structure from the lower APC structure is also considered competent even though the CL soils are relatively weaker than the SM soils.

For the AC pavement design, subgrade strength characterized by the CBR should be considered in thickness computations. Empirical correlation between soil types and CBR indicates that SM soils can have CBR ranging from 10% to 40% and from 5% to 15% for the CL soils.

For conservatism, the existing subgrade design CBR is assumed to be 10%. For rigid pavement design, subgrade modulus of reaction, *k*-value should be considered. Correlation between CBR and *k*-value may provide *k*-value of greater than 200 psi/in. For relatively strong subgrade soils, this correlation somewhat over estimates the *k*-value. A relatively lower *k*-value of 180 psi/in. was assumed for the rigid pavement design. However, it is indicated from the borings in the EMP and Compass Rose sites that the CL subgrade soils are relatively weaker than those in Runway 6-24. GET recommended a design *k*-value of 125 psi/in. for the slab on grade system for the floor in the building. This value may also be considered for the EMP and compass rose sites as a conservative assumption.

TABLE 3-1 RUNWAY 14-32 BORING RESULTS SUMMARY

Boring No.	Thickness, in. AC	Thickness, in. PCC	Subgrade	Section ID	2013 PCI	Construction Record	Remark
B-1	n/a	10.5	SM	R20-1	19	10" PCC	RW 2-20 (RW 20 end)
B-2*	4.8	12.8	SM	R14-3	55	7-12"AC/11" PCC	RW 14-32
B-4	8.75	10.5	SM	R06-2/R14-3	63/55	7-10" AC/10" PCC/APC#	RW 6-24 (RW 14-32 intersection)
B-5	8.5	9.5	SM	R14-3	55	7-12"AC/11" PCC	RW 14-32 (RW 2-20 intersection)
C-1	3	5.4		OA14-3	35	2.5" AC/17" PCC	RW 14 Overrun
C-4	6.5	11		R14-3	55	7-12"AC/11" PCC	RW 14-32
C-5^	8.25	n/a		R14-3	55	7-12"AC/11" PCC	RW 14-32
C-6^	11.25	n/a		R14-3	55	7-12"AC/11" PCC	RW 14-32
C-7^	11.25	n/a		R14-3	55	7-12"AC/11" PCC	RW 14-32
C-12^	8.25	n/a		R06-2/R14-3	63/55	7-10" AC/10" PCC/APC#	RW 6-24 (RW 14-32 intersection)
C-19	22.3	10.25		R20-2	66	4-5" AC/10" PCC	RW 2-20 (Adjacent to RW 14-32 on the south)
*	Another 3.3" AC/11.5" PCC under the PCC shown					AC = Asphalt Concrete	
^	only AC extracted, core stopped at top of PCC					PCC = Portland Cement Concrete	
#	The APC is 7 to 13" AC on 8" PCC					APC = AC over PCC	

TABLE 3-2 RUNWAY 6-24 BORING RESULTS SUMMARY

B-4	8.8	10.5	SM	R06-2/R14-3	63/55	7-10" AC/10" PCC/APC#	RW 6-24 (RW 14-32 intersection)
B-7	6.5	8	SM	R06-2	63	7-10" AC/10" PCC/APC#	RW 6-24
B-8	5.8	9.5	SM	TE-2	45	7"+ AC/9.5" PCC	TW E (Adjacent to RW 6-24)
B-9*	5.3	7	SM	EMP-2	48	8" AC/8" AGBS	Adjacent to RW 6-24 on EMP Towway
B-10	5.5	9	CL	R06-2	63	7-10" AC/10" PCC/APC#	RW 6-24
B-11	12	10	CL	R06-2	63	7-10" AC/10" PCC/APC#	RW 6-24
B-12	9.3	9.8	CL	R06-2	63	7-10" AC/10" PCC/APC#	RW 6-24
B-13	7.8	n/a	SC	R06-2	63	7-10" AC/10" PCC/APC#	RW 6-24
B-14	n/a	12	CL	EMP-1	60	6" PCC/8" AGBS	EMP pad
B-15	n/a	14.5	CL	EMP-1	60	6" PCC/8" AGBS	EMP pad
B-16	n/a	8	CL	DCCP-1	0	n/a	Compass rose pad
B-17	n/a	7.5	SM	DCCP-1	0	n/a	Compass rose pad
C-10	8	n/a		R06-2	63	7-10" AC/10" PCC/APC#	RW 6-24
C-11	6.5	n/a		R06-2	63	7-10" AC/10" PCC/APC#	RW 6-24
C-12^	8.3	n/a		R06-2/R14-3	63/55	7-10" AC/10" PCC/APC#	RW 6-24 (RW 14-32 intersection)
C-13^	7.8	n/a		R06-2	63	7-10" AC/10" PCC/APC#	RW 6-24
C-14^	8.5	n/a		R06-2	63	7-10" AC/10" PCC/APC#	RW 6-24
C-15^	6.5	n/a		R06-2	63	7-10" AC/10" PCC/APC#	RW 6-24
C-16^	7.5	n/a		R06-2	63	7-10" AC/10" PCC/APC#	RW 6-24
C-17^	7.8	n/a		R06-2	63	7-10" AC/10" PCC/APC#	RW 6-24
C-20	6.3	n/a		EMP-2	48	8" AC/8" AGBS	EMP towway
C-36	3.8	10		TE-1	75	4" AC/8-9" PCC	TW E north of RW 6-24
C-37	n/a	14		HA10-2	90	6" PCC/7" AC/8" PCC	TW A at RW 6 end
C-38	n/a	13		R06-1	90	12" PCC/10" AC/10" PCC/APC#	RW 6-24
C-39	7.8	10.3		HA24B-1	55	8.5" AC/10-11" PCC	Adjacent to RW 6-24 on TW G
C-40	7.8	10		R06-2	63	7-10" AC/10" PCC/APC#	RW 6-24
C-41	5.5	5		EMP-2	48	8" AC/8" AGBS	Adjacent to RW 6-24 on EMP Towway
C-42	n/a	22		R06-3	90	14.5" PCC/6" Stabilized Base	RW 6-24
*	7" is cement treated aggregate base					AC = Asphalt Concrete	
^	only AC extracted, core stopped at top of PCC					PCC = Portland Cement Concrete	
#	The APC is 7 to 13" AC on 8" PCC					APC = AC over PCC	
						AGBS = Aggregate Base	

As can be seen in Table 3-1 and Table 3-2, there are some discrepancies between the results from cores/borings and the construction records. Some sections on Runway 14-32 and Runway 6-24 were not investigated by the cores/borings. The construction records in these sections were referred to for existing structures. For pavement areas with limited number of borings/cores, construction records were given preference. A summary of the existing pavement sections to be considered for repair is shown in Table 3-3, excluding the connector taxiways and other pavement features not considered primary objectives of the two phases.

TABLE 3-3 SUMMARY OF EXISTING STRUCTURES

Section ID	2013 PCI	Existing Structures	Remark
Phase 1, Repair of Runway 14-32			
OA14-1	35	9.5" PCC/subgrade	RW 14 overrun
OA14-2	25	1.5" AC/11" PCC/8.5" CTB	RW 14 overrun, middle section
OA14-3	35	3" AC/5.5" PCC	RW 14 overrun, next to RW 14 threshold
R14-1/1A	94/94	12" PCC/8" CTB	2,185 feet from RW 14 threshold
R14-3/3A	55/55	9" AC/10" PCC	5,150 feet middle portion of RW 14-32
R14-4/4A	93/91	12" PCC/8" CTB	2,410 feet from RW 32 threshold
R20-1	19	10" PCC/subgrade	Current helipad on Runway 20 end
Phase 3, Repair of Runway 6-24			
R06-BP1	94	8" PCC/6" stone base	RW 6 blast pad
R06-1/1A	90/94	12" PCC/10" AC/10" PCC/APC	1,388 feet from RW 6 threshold
R06-2/2A	63/62	7" AC/9" PCC/APC	9,082 feet middle portion of RW 6-24
R06-3/3A	90/74	14.5" PCC/6" Rubblized PCC/12" AGBS	1,044 feet from RW 24 threshold
R06-BP2	97	8" PCC/6" stone base	RW 24 blast pad
EMP-1	60	12" PCC	EMP pad
DCCP-1	0	8" PCC	Compass rose pad

3.2 CHARACTERIZATION OF BASE/SUBBASE LAYERS

According to UFC 3-260-02, flexible pavements should be composed of an AC surface layer on top of a base and subbase. Aggregate materials can be used for the base and subbase layers with a different CBR requirement for each.

The granular base can be crushed aggregate or a mixture of crushed and natural aggregate materials. The Navy limits the maximum CBR value for aggregate base to 80%. The minimum base layer required by the Navy is eight (8) inches when aircraft gross operational weight(s) is greater than 30,000 lbs.

The granular subbase materials may consist of naturally occurring coarse grained soils or blended and processed soils. A minimum CBR value of 30% is required for Navy facilities.

Stabilized materials can also be used as a base layer in flexible pavements. For the CBR design method, the required granular base is computed and then converted to a stabilized base using an equivalent factor. For the Navy, one unit of stabilized base such as AC or cement stabilized base can be considered equivalent to 1.5 units of a granular base layer.

For rigid pavements, either stabilized or granular base/subbase can be used under the PCC surface. The benefit of using a stabilized base layer includes uniform slab support, reduced risk of pumping, stable construction platform, etc. The minimum base layer under the PCC surface is six (6) inches for both granular and stabilized materials. If subgrade is composed of relatively weak fine grained soils such as clay or heavy clay, the minimum granular base should be increased to eight (8) inches.

3.3 CONCRETE FLEXURAL STRENGTH

For rigid pavement design, the flexural strength of the PCC is a critical design input. The UFC recommends that the design flexural strength range be 600 psi to 650 psi. The UFC also recommends a maximum flexural strength of 700 psi. The design flexural strength is based on the 90-day strength of laboratory-cured specimens. However, if the pavements are returned to service less than 90 days, the design strength should be specified for the shorter periods.

For this project, the design flexural strength is assumed to be 650 psi for thickness computations. The construction specification generally specifies 28-day strength. Taking into account of the strength gain, the 90-day strength of 650 psi approximately corresponds to approximately 620 psi for a 5% gain.

3.4 TRAFFIC

Military airfield pavements can be designed using standard traffic patterns or predicted aircraft use at a particular airfield. The traffic pattern is characterized by the aircraft types, gross weight of the aircraft, and total passes of the aircraft for the prescribed design life.

The March 2013 condition survey report includes annual aircraft operations prediction. The predicted traffic is believed to be the total annual operations at NASPR from all runways. A relatively detailed operation record from September 2013 to September 2014 was also provided. The records provided aircraft operations on each runway end, including Runway 14, Runway 32, Runway 6, and Runway 24.

When checking the provided aircraft fleet mix, those aircraft with take-off weights less than 5,000 lbs. were excluded from the design use. All helicopters were also excluded from the design use except for helipad pavement design. The aircraft fleet mix for runway pavement design is shown in Table 3-

4. Those aircraft that are believed to be less than 5,000 lbs. are indicated in Table 3-5 for verification. If some of them are much greater than 5,000 lbs., they may be included in the design fleet mix. All helicopter operation data are shown in Table 3-6 for helipad design consideration.

As indicated in Table 3-4, Runway 14-32 appears to be the primary runway having majority of the traffic. Experience shows that operation frequencies usually have minor impact on the pavement structure compared to the weights. Total traffic from the airport may be considered for the pavement design. Based on design procedures, departure frequencies are generally considered for pavement design because the departure weights are greater than the landing weights.

Based on the above discussion, total aircraft operations from the September 2013 to September 2014 were considered for Runway 14-32 and Runway 6-24 pavement designs. Total aircraft operations and departures at NASPR were computed and shown in Table 3-4 for 20 years' design life.

In addition to the 2013 record data, standard traffic patterns included in the UFC and PCASE program were also considered for design comparisons. The traffic pattern is characterized by the aircraft types, gross weight of the aircraft, and total passes of the aircraft for the prescribed design life. These are included in Table 3-7.

As indicated in Table 3-7, the design gross weights and passes are further divided by the traffic area. The Navy airfield has three principal traffic areas, i.e. primary, secondary, and supporting. For PCASE implementation, these areas correspond to Air Force airfield pavement design areas.

Traffic Area "A" corresponds to the primary traffic area of Runway 14-32 and Runway 6-24. It is the full width of the first 1,000 feet of the two runways at both ends and primarily receives channelized loading. Traffic Area "B" corresponds to those areas where aircraft traffic is not typically channelized and is more evenly distributed over the full width of the pavement than in Traffic Area "A". Traffic Area "B" typically receives the same gross weight of the various aircraft as recorded in Traffic Area "A". This traffic pattern can be applied to the EMP and Compass Rose pad. Traffic Area "C" corresponds to the secondary traffic area of the two runways. It is the full width of the runway except for Traffic Area "A". However, if the Air Force configuration is reviewed, the "C" area is the 75 feet keel section of the runway. Traffic Area "D" corresponds to the runway blast pad and overrun for the Navy. However, if the Air Force configuration is reviewed, the "D" area is the area outside of the keel section of the runway and adjacent to the "C" area.

The standard Army Class II (IFR) Helipad considers CH-47 as the design helicopter. The majority of helicopter operations at NASPR are from H60 with gross weight of 16,260 lbs. and 20 years' total passes of 57,520 as shown in Table 3-6.

TABLE 3-4 PAVEMENT DESIGN TRAFFIC

		Airport Annual Operations		Runway 14-32	Runway 6-24	20-year	
Aircraft	**Take-off Weight**	**2013 Prediction**	**Sept. 2013 to Sept. 2014 Record**	**Sept. 2013 to Sept. 2014 Record**	**Sept. 2013 to Sept. 2014 Record**	**Operation**	**Departures**
			a			*b=a*20*	*c=b/2*
C5A	769,000	19	1	1	n/a	20	10
C17	585,000	14	13	12	1	260	130
DC10	583,000	n/a	6	n/a	6	120	60
B25	336,500	68	128	74	54	2,560	1,280
KC135R	297,000	11	13	8	5	260	130
H/E6	245,250	800	818	397	421	16,360	8,180
B757	229,500	41	13	2	11	260	130
P8	188,200	1,127	1,175	765	420	23,500	11,750
C130	155,000	1,030	1,283	694	589	25,660	12,830
B737	148,070	43	13	7	6	260	130
P3	135,000	820	1,688	1,001	687	33,760	16,880
MIG15	90,385	118	67	32	35	1,340	670
F35	70,400	2,190	3,250	1,980	1,270	65,000	32,500
F18	66,000	9,264	11,779	7,517	3,930	235,580	117,790
GULF	69,700	9	16	10	6	320	160
LR24	18,300	764	871	462	406	17,420	8,710
C12	16,600	1,979	1,883	995	792	37,660	18,830
JS31	15,308	4,235	5,227	2,977	2,250	104,540	52,270
SNJ	6,500	1,858	1,613	868	628	32,260	16,130

TABLE 3-5 LIGHT AIRCRAFT

		Airport Annual Operations		Runway 14-32	Runway 6-24	20-year	
Aircraft	Take-off Weight	2013 Prediction	Sept. 2013 to Sept. 2014 Record	Sept. 2013 to Sept. 2014 Record	Sept. 2013 to Sept. 2014 Record	Operation	Departures
			a			*b=a*20*	*c=b/2*
U6	5,100	197	410	138	92	8,200	4,100
T34	4,300	217	136	18	32	2,720	1,360
SR22	3,600	30	22	14	4	440	220
M20	3,374	8	4	3	n/a	80	40
C182	3,110	3	5	4	1	100	50
C177	2,500	1	1	1	n/a	20	10
T41	2,500	105	123	34	16	2,460	1,230
C172	2,450	311	938	187	186	18,760	9,380
C152	1,670	728	6	5	1	120	60
PA28	1,670	135	1,044	518	125	20,880	10,440
AH1	Unknow	171	201	50	9	4,020	2,010
CHAWK	Unknow	17	14	10	4	280	140
H3	Unknow	63	2	n/a	n/a	40	20
H71	Unknow	4	6	3	3	120	60
MD50	Unknow	23	33		2	660	330
Other	Unknow	950	n/a	n/a	n/a	n/a	n/a
PA31	Unknow	85	16	4	7	320	160
SAAB	Unknow	188	144	96	48	2,880	1,440
U1	Unknow	173	20	5	5	400	200

TABLE 3-6 HELICOPTER TRAFFIC

		All Runways Operations		Runway 2-20	20-Year
Aircraft	Take-off Weight	2013 Prediction	Sept. 2013 to Sept. 2014 Record	Sept. 2013 to Sept. 2014 Record	Operation
			a		*b=a*20*
H53	69,750	132	35	20	700
H46	50,000	91	1		20
H60	16,260	1,475	2,876	1,240	57,520
UH1	11,500	54	31	20	620
HH65	9,480	8	2		40
UH72	7,900	253	524	255	10,480
H57	3,000	100	87	50	1,740
H58	3,000	444	1,027	914	20,540

TABLE 3-7 STANDARD TRAFFIC PATTERN

Aircraft	Weight (lb)		Total Passes (20 Years)	
	Traffic Area A, B	Traffic Area C, D	Traffic Area A, B, C	Traffic Area D
Navy Design Traffic Group I				
C-17A GLOBEMASTER III	585,000	438,750	15,000	150
F-15E EAGLE	81,000	60,750	300,000	3,000
KC-10A REFUELER	590,000	442,500	10,000	100
P-3C	135,000	101,250	150,000	1,500
Army Class II (IFR) Helipad				
CH-47	50,000	37,500	30,000	300

SECTION 4.0

DESIGN ANALYSIS AND RESULTS

SECTION 4.0 DESIGN ANALYSIS AND RESULTS

Due to the budget limits, the repair is primarily limited to functional restoration of the existing pavement surface based on the surface condition. This is essentially a maintenance program to address the surface distresses by partial or full depth repair either locally or globally in individual pavement sections. However, some of the pavement sections that are in poor conditions were considered to be reconstructed or strengthened. Isolated areas may also require full depth repair or reconstruction.

To justify the proposed repair approach, new pavement designs were performed. Existing pavement sections can be compared with the designed sections. Corresponding repair options can then be made.

The computer program, PCASE, was used in the designs. Both AC and PCC pavement structures were considered for reconstruction considerations. Design CBR of the subgrade is 10% and design subgrade *k*-value is 180 psi/in. Design flexural strength of the PCC is assumed to be 650 psi.

For the EMP and compass rose parking pads, the lean clay (CL) subgrade soils appeared to be weaker than those found in Runway 6-24. The geotechnical investigation recommended a design *k*-value of 125 psi/in. for the slab on grade floor system. Since the existing pavement structures at the two sites are in poor condition, it was determined to reconstruction the pads with new PCC pavements according to JMT. During reconstruction, the subgrade soils will be re-compacted, the design *k*-value of 150 psi/in. is considered to be achievable and will be considered for the new pavement design.

Three design traffic patterns were considered, total 20-year departures, total 20-year operations, and standard design traffic patterns shown in Table 3-4 and Table 3-7.

4.1 RIGID PAVEMENT DESIGNS

Based on design inputs, required PCC pavement sections were computed using PCASE. A 6-inch thick cement stabilized aggregate base (CTB) was assumed for the reconstruction. The computed PCC thicknesses were rounded to the nearest half of an inch. The results are summarized in Table 4-1. The design for Traffic Area “B” can be applied for the EMP and Compass Rose parking pads.

As indicated, the required PCC thicknesses in the same traffic area vary by half of an inch for the three traffic patterns.

By comparing the PCC reconstruction designs with the existing Runway 14-32 pavements, it is noticed that the 1,000 feet PCC pavements at the two runway ends may not be structurally adequate. The existing section is 12 inches PCC on eight (8) inches CTB.

However, the existing PCC pavement can have higher flexural strength from the long term strength gain in the field. If subgrade *k*-value is higher than assumed for the new pavement design, the existing section can still be structurally adequate. Computation from PCASE indicated that for existing PCC flexural strength of 700 psi and subgrade *k*-value of 250 psi/in. The 12 inches existing PCC is adequate for standard Navy traffic.

Further, the PCC section at the two runway ends of Runway 14-32 were in good condition with PCI above 90 from the 2013 report. The PCC flexural strength can be higher than 700 psi. Therefore, the two runway ends can be structurally adequate for potentially higher flexural strength and good subgrade support. From a maintenance point of view, it is economical to keep monitoring the performance rather than strengthening it. If isolated areas need full depth repair, replacing PCC in kind (minimum of 12 inches) is recommended.

In section R01-1/1A of Runway 6-24, the existing pavement section is composed of 12 inches of PCC on 10 inches of AC on 10 inches PCC. Under the 10 inches of PCC is an APC pavement system. Therefore, the effective *k*-value on top of the 10 inches of PCC and the underlying APC can be greater than 300 psi/in. The required PCC for the flexural strength of 650 psi is 12 inches and can be less than the 12 inches if the existing PCC has higher than 650 psi/in. flexural strength. There, R01-1/1A is structurally adequate.

In R06-3/3A of Runway 6-24, the existing pavement section is composed of 14.5 inches of PCC on six (6) inches of rubblized PCC on 12 inches aggregate base. Assuming the *k*-value of 180 psi/in. and the PCC flexural strength of 685 psi, the required PCC thickness is 14 inches by the computation. Therefore, the existing pavement in R06-3/3A is also structurally adequate for the full airport traffic.

Similar to Runway 14-32, the two PCC pavement sections at the runway ends of Runway 6-24 have PCI greater than 90, except for the side section of R06-3A with PCI of 74. Therefore, regular maintenance is adequate for these two sections. If isolated slabs need full depth repair, replacing PCC in kind is recommended.

For the blast pads of Runway 6-24, the design traffic for Area-D may not apply. According to the UFC, the blast pads should be designed for 200 passes of the design aircraft at 75% of the weight. For the record traffic, the design aircraft is a P-8 aircraft and the required PCC is nine (9) inches

of PCC on six (6) inches of uncrushed aggregate base for concrete flexural strength of 700 psi. The existing blast pads PCC is eight (8) inches. The existing blast pads may not be structurally adequate. However, if evaluated using the standard Navy design traffic, the design aircraft is the P-3C aircraft and the required PCC is 7.5 inches. The blast pads are structurally adequate for the standard Navy design traffic. In light of the good surface condition with PCI greater than 90, the blast pads for Runway 6-24 are considered structurally adequate and regular maintenance is adequate.

TABLE 4-1 PCC PAVE MENT REQUIREMENTS

Design	Traffic	Thickness, inch	
Traffic	Area	PCC	CTB
PCC flexural strength = 650 psi, *k* -value = 180 psi/in.			
Total Departures	Area - A	14.5	6.0
Total Operations		15.0	6.0
Navy Standard		14.5	6.0
Total Departures	Area - C	12.0	6.0
Total Operations		12.5	6.0
Navy Standard		12.0	6.0
Total Departures	Area - D (Overrun)	8.5	6.0
Total Operations		9.0	6.0
Navy Standard		8.5	6.0
Army Standard	Helipad (A)	7.0	6 (Aggregate)
PCC flexural strength = 650 psi, *k* -value = 150 psi/in.			
Total Departures	Area - B	14.5	6.0
Total Operations		15.0	6.0
Navy Standard		14.5	6.0

4.2 FLEXIBLE PAVEMENT DESIGNS

Based on design inputs, required AC pavement sections were computed using PCASE. The computed results were rounded and minimum thickness requirements were considered. The results are summarized in Table 4-2. The AC pavement was not considered for the reconstruction for EMP and Compass Rose parking pads.

As indicated, in the same traffic area, the three traffic patterns have minor differences on the required pavement sections in terms of aggregate base thicknesses. The standard Navy design traffic needs the thickest aggregate base. The Helipad pavement was designed for “A” traffic area located in current R20-1 section. The existing 10.5 inches PCC is to be milled for approximately 1.5 inches and cracked and seated for the proposed AC overlay. A minimum two (2) inches AC thickness is adequate.

To provide flexible repair options for the overrun at the Runway 14 end, additional designs were performed for the use of lean concrete base, overlay on cracked and seated PCC, and overlay on existing asphalt overlaid PCC pavements. These are indicated in Table 4-3.

For the AC overlay on existing AC overlaid PCC design, the existing five (5) inches PCC was considered as high quality aggregate base. The flexible design model was used in the design.

The required AC structures in Table 4-2 and Table 4-3 can be compared with the existing AC pavement for overlay or reconstruction. As can be seen, the existing AC overlaid PCC pavement is adequate for the corresponding traffic area.

TABLE 4-2 AC PAVEMENT REQUIREMENTS

Design Traffic	Traffic Area	Thickness, inch AC	Thickness, inch Base
Subgrade CBR = 10%, Crushed aggregate base CBR = 80%			
Total Departures	Area - A	9	8
Total Operations		9	8
Navy Standard		9	11
Total Departures	Area - C	7	8
Total Operations		7	8
Navy Standard		7	10
Total Departures	Area - D (Overrun)	4	8
Total Operations		4	9
Navy Standard		4	11
Army Standard	Helipad (A)	2	9 (Cracked and Seated PCC)

TABLE 4-3 ADDITIONAL DESIGN FOR TRAFFIC AREA - D

Design Traffic	Traffic Area	Thickness, inch AC	Thickness, inch Base
Subgrade CBR = 10%, Lean concrete base			
Total Departures	Area - D	3	8
Total Operations	Area - D	3	8
Navy Standard	Area - D	3	9
Total Operations	Area - D	3	9 (Cracked and Seated PCC)
Navy Standard	Area - D	4	9 (Cracked and Seated PCC)
Total Operations	Area - D	3	3"AC/5"PCC
Navy Standard	Area - D	4	3"AC/5"PCC

4.3 RECOMMENDED REPAIR OPTIONS

The designed sections in Table 4-1 to Table 4-3 can be selected for reconstruction use elsewhere within the proposed project limits for adjacent taxiways. A summary of likely repair options is presented in Table 4-4 for reference.

The AC sections of the runways primarily consist of AC on PCC or APC. An additional repair option includes partial depth patching for areas where alligator cracking was recorded in the runway. Given the location of the areas witnessed, it is unclear if weak layer(s) within the AC materials are the primary cause contributing to the distress. Given that the overall pavement structure is considered adequate for the proposed traffic, patching to a depth of approximately six (6) inches below the proposed grade after milling is recommended.

Since the repair options for some of the sections, for example, OA14-3, were based on certain assumptions, additional geotechnical investigations may be performed. It is recommended that cores/borings be performed in OA14-3, R14-1 and R14-4 with 1,000 feet from the runway end (Traffic – A Area). Concrete flexural strength tests may also be necessary.

It is noted that the two runway ends of Runway 14-32 was evaluated to be structurally adequate for the standard Navy traffic pattern with anticipated strong subgrade support and higher flexural strength. This also applies to the blast pads for Runway 6-24. Based on this and budget limits, reconstruction was not considered for these sections. Current PCI (results of 2013 survey) are above 90. This appears to support the recommended repair option.

TABLE 4-4 RECOMMENDED REPAIR OPTIONS

Section ID	2013 PCI	Existing Structures	Likely Repair Option	Remark
Phase 1, Repair of Runway 14-32				
OA14-1	35	9.5" PCC/subgrade	3" AC on 9" Cracked and Seated PCC	RW 14 overrun
OA14-2	25	1.5" AC/11" PCC/8.5" CTB	3" AC on 8" Lean concrete	RW 14 overrun, middle section
OA14-3^	35	3" AC/5.5" PCC	3" AC overlay on existing 3" AC and 5" PCC	RW 14 overrun, next to RW 14 threshold
R14-1/1A	94/94	12" PCC/8" CTB	12" PCC panel replacement	2,185 feet from RW 14 threshold
R14-3/3A	55/55	9" AC/10" PCC	Variable AC mill and replacement	5,150 feet middle portion of RW 14-32
R14-4/4A	93/91	12" PCC/8" CTB	12" PCC panel replacement	2,410 feet from RW 32 threshold
R20-1	19	10" PCC/subgrade	2" AC on 9" cracked and seated PCC	Current helipad on Runway 20 end
Phase 3, Repair of Runway 6-24				
R06-BP1	94	8" PCC/6" stone base	8" PCC panel replacement	RW 6 blast pad
R06-1/1A	90/94	12" PCC/10" AC/10" PCC/APC	12" PCC panel replacement	1,388 feet from RW 6 threshold
R06-2/2A	63/62	7" AC/9" PCC/APC	Variable AC mill and replacement	9,082 feet middle portion of RW 6-24
R06-3/3A	90/74	14.5" PCC/6" Rubblized PCC/12" AGBS	14.5" PCC panel replacement	1,044 feet from RW 24 threshold
R06-BP2	97	8" PCC/6" stone base	8" PCC panel replacement	RW 24 blast pad
EMP-1	60	12" PCC	15" PCC/6" CTB reconstruction	EMP pad
DCCP-1	0	8" PCC	15" PCC/6" CTB reconstruction	Compass rose pad
^ The repair AC overlay option is based on the thin PCC shown. Further core is necessary to verify the PCC thickness.				
AC mill and replacement may be adequate depending on verified PCC thickness				

At the beginning of the project, a distress survey was conducted within the project limits plus additional pavement features that need to be rehabilitated. The approximate locations of the distresses with the severities were mapped and included in Appendix D. The distress maps can be used to estimate the repair quantities for the sections that need isolated panel replacement and partial or full depth repair.

APPENDIX A

PAVEMENT SECTION MAP
(From March 2013 PCI Report)

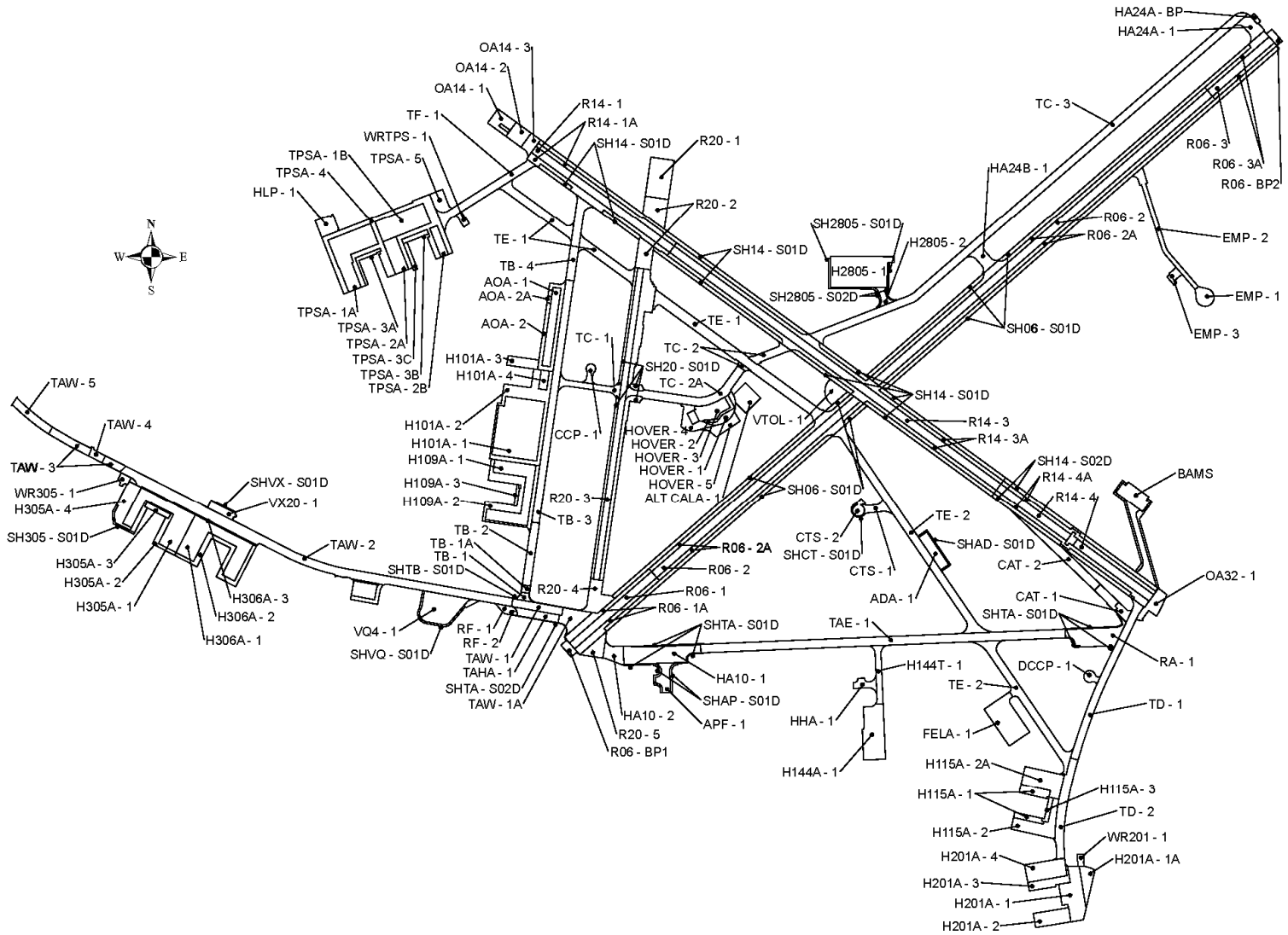

NAS PATUXENT RIVER, LEXINGTON PARK, MARYLAND

Section Location Map

Figure 1.

APPENDIX B

GEOTECHNICAL REPORT

PRELIMINARY REPORT OF SUBSURFACE INVESTIGATION SERVICES

Naval Air Station Patuxent River
Repair Runways 14-32 & 6-24

NAS PAX River, Patuxent River, Maryland

G E T Project No: WM14-180G

December 10, 2014

PREPARED FOR:

1592-E Penniman Road • Williamsburg, VA 23185
Phone: (757)-564-6452
www.getsolutionsinc.com

December 10, 2014

TO: **Johnson, Mirmiran and Thompson**
272 Bendix Road, Suite 260
Patuxent River, VA 23452

Attn: Mr. Rusty Owens, P.E.

RE: Preliminary Report of Subsurface Investigation Services
Naval Air Station Patuxent River
Repair Runways 14-32 & 6-24
NAS PAX River, Patuxent River, Maryland
G E T Project No: WM14-180G

Dear Mr. Moore:

In compliance with your instructions, we have completed our subsurface investigation services for the referenced project. The results of this study, together with our recommendations, are presented in this report.

Often, because of design and construction details that occur on a project, questions arise concerning subsurface conditions. **G E T Solutions, Inc.** would be pleased to continue its role as Geotechnical Engineer during the project implementation.

Thank you for the opportunity to work with you on this project. We trust that the information contained herein meets your immediate need, and should you have any questions or if we could be of further assistance, please do not hesitate to contact us.

Respectfully Submitted,
G E T Solutions, Inc.

Joseph R. Robinson, P.E.
Project Engineer
VA Reg. # 050157

Bruce R. Spiro, P.E.
Principal Engineer
MD Reg. # 0036306

STATE OF MARYLAND
BRUCE R SPIRO
No. 36306
PROFESSIONAL ENGINEER

Copies: (1) Client

1592-E Penniman Road • Williamsburg, VA 23185 • Phone: (757)-564-6452 • Fax: (757)-564-6453
info@getsolutionsinc.com

TABLE OF CONTENTS

1.0 PROJECT INFORMATION 1

1.1 Project Authorization 1
1.2 Project and Site Description 1
1.3 Purpose and Scope of Services 1

2.0 FIELD AND LABORATORY PROCEDURES 2

2.1 Field Exploration 2
2.2 Laboratory Testing 2

3.0 SITE AND SUBSURFACE CONDITIONS 3

3.1 Site Geology 3
3.2 Existing Pavement Conditions 3
3.3 Subsurface Soil Conditions 4
3.4 Groundwater Information 5

4.0 REPORT LIMITATIONS 6

APPENDIX I - BORING LOCATION PLAN
APPENDIX II - SOIL CLASSIFICATION SYSTEM
APPENDIX III - BORING LOGS
APPENDIX IV - GENERALIZED SOIL PROFILE
APPENIDX V - PAVEMENT SECTION COMPOSITION AND DESCRIPTION

1.0 PROJECT INFORMATION

1.1 Project Authorization

G E T Solutions, Inc. has completed our preliminary subsurface investigation services for the Repair Runways 14-32 & 6-24 project at NAS Patuxent River in Patuxent River, Maryland. The services provided for this project were in general accordance with **G E T** Solutions, Inc. Proposal No: PWM14-267G. Authorization to proceed with our subsurface investigation services was received from Mr. Rusty Owens, P.E. in the form of an electronic mail dated October 6, 2014.

1.2 Project and Site Description

The project site is located at Naval Air Station (NAS) Patuxent River in Patuxent River, Maryland. The project will consist of asphalt milling and overlaying and concrete repairs along runways 14-32 & 6-24 at the Patuxent River Airfield. In addition, the construction at this site will consist of installing new associated infrastructure components (lighting, electrical, signage, striping, etc.). The construction will also include repairs/reconstruction of the runways' overruns.

If any of the noted information is incorrect or has changed, please inform **G E T Solutions, Inc.** so that we may amend the recommendations presented in this report, if appropriate.

1.3 Purpose and Scope of Services

The purpose of this study was to obtain information on the general subsurface conditions at the proposed project site as related to the proposed construction. The subsurface conditions encountered were then evaluated with respect to the available project characteristics. In this regard, engineering assessments for the following items were formulated:

1. General assessment of the soils revealed by the borings performed on the runways.

2. General location and description of potentially deleterious material encountered in the borings that may interfere with construction progress or site feature performance, including existing fills or surficial/subsurface organics.

The scope of services did not include an environmental assessment for determining the presence or absence of wetlands or hazardous or toxic material in the soil, bedrock, surface water, groundwater or air, on or below or around this site.

2.0 FIELD AND LABORATORY PROCEDURES

2.1 Field Exploration

Prior to field activities, all permits and clearances were obtained from the corresponding NAS PAX River authorities. In order to identify the pavement composition and also to facilitate the soil test borings, twenty-five (25) 4-inch diameter pavement core samples were extracted along the runways. In order to explore the general subsurface soil types, ten (10) 10-foot deep Standard Penetration Test (SPT) borings were drilled throughout the runway. It is noted that auger refusal was encountered at roughly 1.5-feet below existing grade at the location of boring B-7 and as such the boring was terminated. Upon completion of each core/borehole, the boreholes were backfilled with cement grout and the pavement section was patched with Quikrete© fast setting concrete. It is noted that the collection of five (5) of the originally proposed cores samples was cancelled at the direction of the client. In addition, at the direction of the client, the core samples were terminated once the initial asphalt layer was penetrated.

The SPT borings were performed with the use of hollow stem auger drilling procedures in general accordance with ASTM D 1586. The tests were performed continuously from the existing ground surface to a depth of 10-feet. The soil samples were obtained with a standard 1.4" I.D., 2" O.D., 30" long split-spoon sampler. The sampler was driven with blows of a 140 lb. hammer falling 30 inches, using an automatic hammer. The number of blows required to drive the sampler each 6-inch increment of penetration was recorded and is shown on the boring logs. The sum of the second and third penetration increments is termed the SPT N-value (uncorrected for automatic hammer). A representative portion of each disturbed split-spoon sample was collected with each SPT, placed in a glass jar, sealed, labeled, and returned to our laboratory for review.

The core and boring locations were established by the design team and located in the field by a representative of **G E T Solutions, Inc.** using a hand held Global Positioning System (GPS) device. The approximate boring locations are shown on the attached "Boring Location Plan" (Appendix I), which was reproduced based on a site plan provided by the client. The soil test boring logs and generalized soil profiles are presented in Appendix III and Appendix IV, respectively.

2.2 Laboratory Testing

Representative portions of all soil samples collected during drilling were sealed in glass jars, labeled and transferred to our laboratory for classification and analysis. A Geotechnical Engineer performed the soil classification in general accordance with ASTM Specification D 2487. A summary of the soil classification system is provided in Appendix II.

Eight (8) representative soil samples were selected and subjected to natural moisture, Atterberg limits, and -#200 sieve wash testing and analysis in order to corroborate the visual classification. These test results are tabulated on the following page (Table I) and are also presented on the "Boring Log" sheets (Appendix III).

Table I - Laboratory Test Results

Boring No.	Depth (Feet)	Natural Moisture (%)	Percent Passing #200	Atterberg Limits (LL/PL/PI)	USCS Classification
B-2	6-8	12	49	39/18/21	SC
B-3	2-4	7	20	Non-Plastic	SM
B-4	4-6	3	4	Non-Plastic	SP
B-5	8-10	7	9	Non-Plastic	SP-SM
B-6	4-6	8	20	20/13/7	SC-SM
B-8	2-4	14	58	31/16/15	CL
B-8	6-8	4	4	Non-Plastic	SP
B-9	8-10	17	43	24/14/10	SC

3.0 SITE AND SUBSURFACE CONDITIONS

3.1 Site Geology

The project site lies within a major physiographic province called the Atlantic Coastal Plain. Numerous transgressions and regressions of the Atlantic Ocean have deposited marine, lagoonal, and fluvial (stream lain) sediments. The regional geology is very complex, and generally consists of interbedded layers of varying mixtures of sands, silts and clays. Based on our review of existing geologic and soil boring data, the geologic stratigraphy encountered in our subsurface explorations generally consisted of marine deposited sands and clays.

In order to obtain information regarding historical land use of the project site and its vicinity, we reviewed United States Geological Survey (USGS) geological maps. From this review, it appears that the subgrade soils within the project alignment are natural.

3.2 Existing Pavement Conditions

The results of our coring exploration program are presented on the following page (Table II). More detailed information is provided in the “Pavement Section Composition and Descriptions” presented in Appendix V.

Table II - Pavement Section Composition

Boring Location	Runway	Asphalt Thickness (inch)	Concrete Thickness (inch)	Subgrade USCS Classification
B-1	20	-	10.5	Silty SAND (SM)
B-2*	14	8	24.25	Silty SAND (SM)
B-3	Taxiway North of 14	4.75	11	Silty SAND (SM)
B-4	24	8.75	10.5	Silty SAND (SM) "Possible Fill"
B-5	32	8.5	9.5	Silty SAND (SM)
B-6	Taxiway South of 32	2.25	17.25	Silty Clayey SAND (SC-SM)
B-7	6	6.5	8	Silty SAND (SM) "FILL"
B-8	Taxiway Southeast of 6	5.75	9.5	Silty SAND (SM)
B-9	Taxiway South of 24	5.25	7**	Silty SAND (SM)
B-10	24	5.5	9	Lean CLAY (CL)
C-1	14	3	5.375	Not Encountered
C-4	14	6.5	11	Not Encountered
C-5	14	8.25	-	Not Encountered
C-6	32	11.25	-	Not Encountered
C-7	32	11.25	-	Not Encountered
C-10	6	8	-	Not Encountered
C-11	6	6.5	-	Not Encountered
C-12	6	8.25	-	Not Encountered
C-13	24	7.75	-	Not Encountered
C-14	24	8.5	-	Not Encountered
C-15	24	6.5	-	Not Encountered
C-16	24	7.5	-	Not Encountered
C-17	24	7.75	-	Not Encountered
C-19	20	22.25***	10.25	Not Encountered
C-20	Taxiway South of 24	6.25	-	Not Encountered

**Asphalt and concrete thicknesses represent total depths encountered. Two asphalt layers and two concrete layers were encountered at this location.*
***Cement treated aggregate base material (CTA) was encountered beneath the asphalt layer at this location.*
****Paving fabric encountered between the first and second asphalt layers.*

It is noted that reinforcing steel was encountered within the concrete layers at varying depths across the site. A detailed description of the reinforcing steel types and depths encountered are included in Appendix V.

3.3 Subsurface Soil Conditions

The results of our soil test borings indicated the presence asphalt and/or concrete pavement at the boring locations. Underlying the pavement sections and extending to the boring termination depth of 10 feet below existing site grades, FILL and Possible Fill soils were encountered at some boring locations and subsequently the natural subsurface soils were generally arranged in a single layer configuration. The results of our soil test borings are summarized on the following page (Table III).

Table III - Summary of Soil Test Borings

AVERAGE DEPTH (Feet)	STRATUM	DESCRIPTION	RANGES OF SPT(1) UNCORRECTED N-VALUES
0 to 0.9 - 2.7	Pavement Section	*(Details in Table II)*	-
1.2 - 1.6 to 1.4 - 2	FILL & Possible Fill	SAND (SM) with varying amounts of Silt, Clay and Gravel. **Encountered at the location of borings B-4 and B-7 only.*	12 - 50
0.9 - 2.7 to 10	I	SAND (SC, SC-SM, SM, SP-SM, SP) with varying amounts of Silt, Clay and Gravel. **Deposits of medium stiff to very stiff, lean CLAY (CL) with varying amounts of Silt, Sand and Gravel were encountered at depths ranging from 1.2 to 10 feet below existing grade at the location of borings B-1, B-8 and B-10.*	4 - 86

Notes: (1) SPT = Standard Penetration Test, Uncorrected N-Values in Blows-per-foot

The subsurface description is of a generalized nature provided to highlight the major soil strata encountered. The records of the subsurface exploration are included on the "Boring Logs" sheets (Appendix III) and in the "Generalized Soil Profile" (Appendix IV), which should be reviewed for specific information as to the individual borings. The stratifications shown on the records of the subsurface exploration represent the conditions only at the actual boring locations. Variations may occur and should be expected between boring locations. The stratifications represent the approximate boundary between subsurface materials and the transition may be gradual or occur between sample intervals.

3.4 Groundwater Information

The initial groundwater table was not encountered to the depths explored. The boreholes were backfilled upon completion for safety considerations. As such, the reported groundwater level may not be indicative of the static groundwater level.

As subsurface soils begin to dry moisture moves upwards through the soil profile by means of capillary action. Based on the subsurface soil composition (soils containing more than 30% of fines by weight), this initial groundwater reading (based on the relative wetness of the soils) could be in part attributed to the capillary action of the soils. As such, if the static groundwater elevation is critical to the design it is recommended to install temporary groundwater monitoring wells to substantiate the initial reading.

Groundwater conditions will vary with environmental variations and seasonal conditions, such as the frequency and magnitude of rainfall patterns, as well as man-made influences, such as existing swales, drainage ponds, underdrains and areas of covered soil (paved parking lots, side walks, etc.). In the project's area, seasonal groundwater fluctuations of ± 2 feet or more are common; however, greater fluctuations have been documented. We recommend that the contractor determine the actual groundwater levels at the time of the construction to determine groundwater impact on the construction procedures, if necessary.

4.0 REPORT LIMITATIONS

The Geotechnical Engineer warrants that the findings, recommendations, specifications or professional advice contained herein have been made in accordance with generally accepted professional geotechnical engineering practices in the local area. No other warranties are implied or expressed.

After the plans and specifications are more complete the Geotechnical Engineer should be provided the opportunity to review the final design plans and specifications to assure our engineering recommendations have been properly incorporated into the design documents, in order that the earthwork and recommendations may be properly interpreted and implemented. At that time, it may be necessary to submit supplementary recommendations. This report has been prepared for the exclusive use of JMT, Inc. and their consultants for the specific application to the Naval Air Station Patuxent River - Repair Runways 14-32 & 6-24 project located in Patuxent River, Maryland.

APPENDICES

I. BORING LOCATION PLAN

II. SOIL CLASSIFICATION SYSTEM

III. BORING LOGS

IV. GENERALIZED SOIL PROFILE

V. PAVEMENT SECTION COMPOSITION AND DESCRIPTION

APPENDIX I

BORING LOCATION PLAN

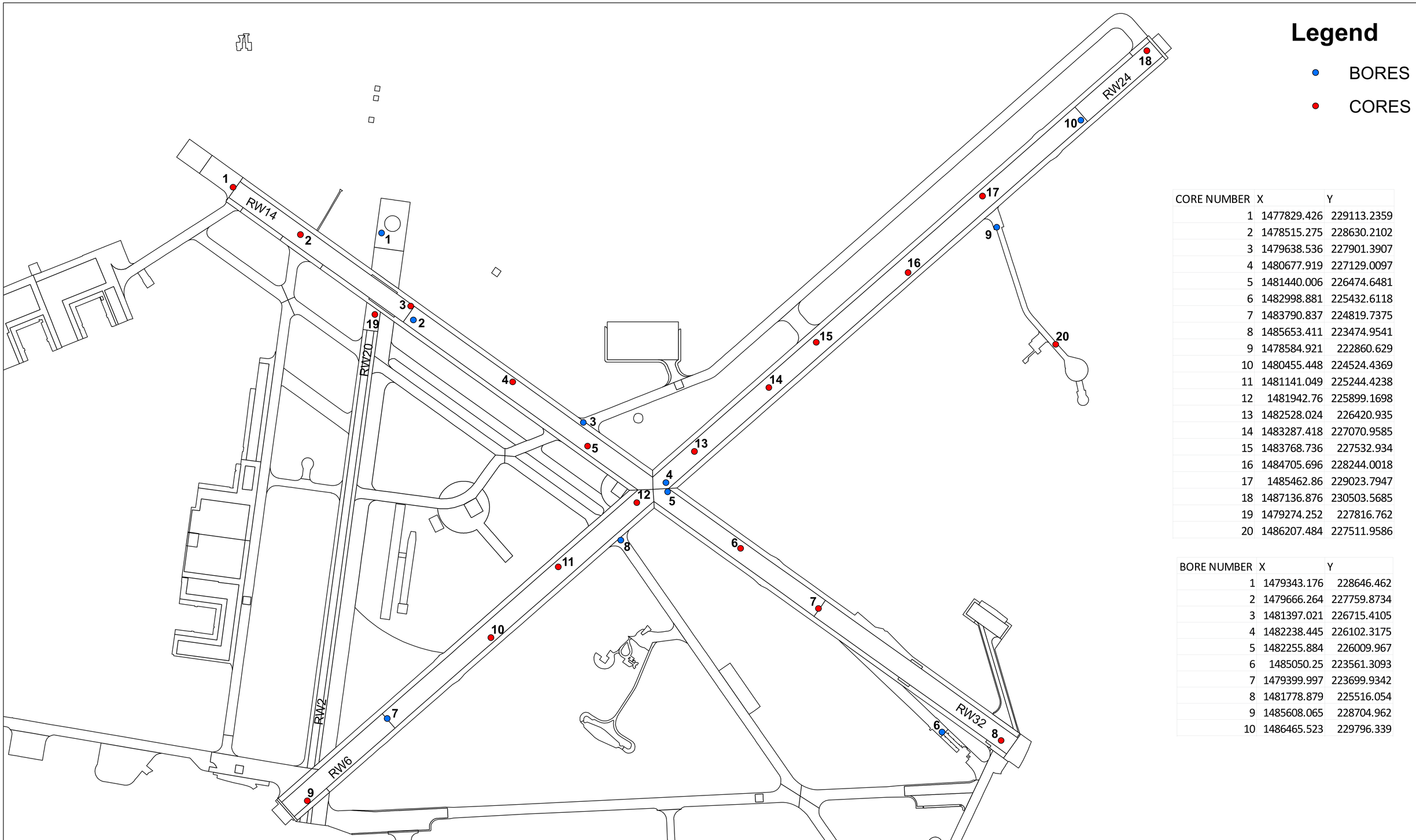

CORE NUMBER	X	Y
1	1477829.426	229113.2359
2	1478515.275	228630.2102
3	1479638.536	227901.3907
4	1480677.919	227129.0097
5	1481440.006	226474.6481
6	1482998.881	225432.6118
7	1483790.837	224819.7375
8	1485653.411	223474.9541
9	1478584.921	222860.629
10	1480455.448	224524.4369
11	1481141.049	225244.4238
12	1481942.76	225899.1698
13	1482528.024	226420.935
14	1483287.418	227070.9585
15	1483768.736	227532.934
16	1484705.696	228244.0018
17	1485462.86	229023.7947
18	1487136.876	230503.5685
19	1479274.252	227816.762
20	1486207.484	227511.9586

BORE NUMBER	X	Y
1	1479343.176	228646.462
2	1479666.264	227759.8734
3	1481397.021	226715.4105
4	1482238.445	226102.3175
5	1482255.884	226009.967
6	1485050.25	223561.3093
7	1479399.997	223699.9342
8	1481778.879	225516.054
9	1485608.065	228704.962
10	1486465.523	229796.339

Naval Air Station Patuxent River
Patuxent River, MD

CORING & BORING LOCATION MAP

0 1,000 2,000 Feet

APPENDIX II

SOIL CLASSIFICATION SYSTEM

GET Solutions, Inc.
Geotechnical • Environmental • Testing

Virginia Beach
204 Grayson Road
Virginia Beach, VA 23462
(757) 518-1703

Williamsburg
1592 Penniman Rd. Suite E
Williamsburg, Virginia 23185
(757) 564-6452

Elizabeth City
504 East Elizabeth St. Suite 2
Elizabeth City, NC 27909
(252) 335-9765

CLASSIFICATION SYSTEM FOR SOIL EXPLORATION

Standard Penetration Test (SPT), N-value

Standard Penetration Tests (SPT) were performed in the field in general accordance with ASTM D 1586. The soil samples were obtained with a standard 1.4" I.D., 2" O.D., 30" long split-spoon sampler. The sampler was driven with blows of a 140 lb. hammer falling 30 inches. The number of blows required to drive the sampler each 6-inch increment (4 increments for each soil sample) of penetration was recorded and is shown on the boring logs. The sum of the second and third penetration increments is termed the SPT N-value.

NON COHESIVE SOILS

(SILT, SAND, GRAVEL and Combinations)

Relative Density

Very Loose	4 blows/ft. or less
Loose	5 to 10 blows/ft.
Medium Dense	11 to 30 blows/ft.
Dense	31 to 50 blows/ft.
Very Dense	51 blows/ft. or more

COHESIVE SOILS

(CLAY, SILT and Combinations)

Consistency

Very Soft	2 blows/ft. or less
Soft	3 to 4 blows/ft.
Medium Stiff	5 to 8 blows/ft.
Stiff	9 to 15 blows/ft.
Very Stiff	16 to 30 blows/ft.
Hard	31 blows/ft. or more

Particle Size Identification

Boulders	8 inch diameter or more	
Cobbles	3 to 8 inch diameter	
Gravel	Coarse	1 to 3 inch diameter
	Medium	$^1/_2$ to 1 inch diameter
	Fine	$^1/_4$ to $^1/_2$ inch diameter
Sand	Coarse	2.00 mm to $^1/_4$ inch (diameter of pencil lead)
	Medium	0.42 to 2.00 mm (diameter of broom straw)
	Fine	0.074 to 0.42 mm (diameter of human hair)
Silt		0.002 to 0.074 mm (cannot see particles)

Relative Proportions

Descriptive Term	Percent
Trace	0-5
Few	5-10
Little	15-25
Some	30-45
Mostly	50-100

Strata Changes

In the column "Description" on the boring log, the horizontal lines represent approximate strata changes.

Groundwater Readings

Groundwater conditions will vary with environmental variations and seasonal conditions, such as the frequency and magnitude of rainfall patterns, as well as tidal influences and man-made influences, such as existing swales, drainage ponds, underdrains and areas of covered soil (paved parking lots, side walks, etc.).

CLASSIFICATION SYMBOLS (ASTM D 2487 and D 2488)

Coarse Grained Soils

More than 50% retained on No. 200 sieve

GW - Well-graded Gravel
GP - Poorly graded Gravel
GW-GM - Well-graded Gravel w/Silt
GW-GC - Well-graded Gravel w/Clay
GP-GM - Poorly graded Gravel w/Silt
GP-GC - Poorly graded Gravel w/Clay
GM - Silty Gravel
GC - Clayey Gravel
GC-GM - Silty, Clayey Gravel
SW - Well-graded Sand
SP - Poorly graded Sand
SW-SM - Well-graded Sand w/Silt
SW-SC - Well-graded Sand w/Clay
SP-SM - Poorly graded Sand w/Silt
SP-SC - Poorly graded Sand w/Clay
SM - Silty Sand
SC - Clayey Sand
SC-SM - Silty, Clayey Sand

Fine-Grained Soils

50% or more passes the No. 200 sieve

CL - Lean Clay
CL-ML - Silty Clay
ML - Silt
OL - Organic Clay/Silt
Liquid Limit 50% or greater
CH - Fat Clay
MH - Elastic Silt
OH - Organic Clay/Silt

Highly Organic Soils

PT - Peat

Depending on percentage of fines (fraction smaller than No. 200 sieve size), coarse-grained soils are classified as follows:

Less than 5 percent	GW, GP, SW,SP
More than 12 percent	GM, GC, SM, SC
5 to 12 percent	Borderline cases requiring dual symbols

Plasticity Chart

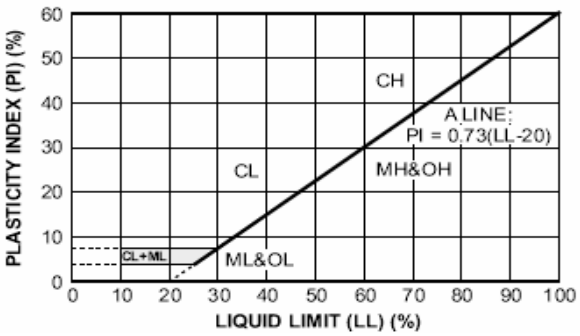

APPENDIX III

BORING LOGS

RECORD OF SUBSURFACE EXPLORATION

GET Solutions, Inc.
Geotechnical • Environmental • Testing

Virginia Beach
204 Grayson Road
Virginia Beach, VA 23642
757-518-1703

Williamsburg
1592-E Penniman Road
Williamsburg, VA 23185
757-564-6452

Elizabeth City
106 Capital Trace Unit E
Elizabeth City, NC 27909
252-335-9765

Jacksonville
415-A Western Blvd
Jacksonville, NC 28546
910-478-9915

BORING ID B-1

PROJECT NAME: **Naval Air Station Patuxent River Repair Runways 14-32 & 6-24**
PROJECT NUMBER: **WM14-180G**
CLIENT: **Johnson, Mirmiran & Thompson, Inc.**
SURFACE ELEVATION (MSL) (ft):
PROJECT LOCATION: **Patuxent River, MD**
LOGGED BY:
BORING LOCATION: **See Attached Boring Location Plan**
DATE STARTED: **11/3/2014**
DRILLING METHOD(S): **Rotary wash "mud"**
DATE COMPLETED: **11/3/2014**
GROUNDWATER*: INITIAL (ft) ▽: ___ AFTER ___ HOURS (ft) ▼: ___ CAVE-IN (ft) ◌: ___
DRILLER: **GET Solutions, Inc.**

The initial groundwater readings are not intended to indicate the static groundwater level.

Elevation (ft)	Depth (ft)	STRATA DESCRIPTION	Sample ID	Sample Type	Sample Recovery (in.)	Blow Counts (N-Values)	%<#200
	0.9	10.5-in Concrete					
	2.0	Brown, moist, Silty fine to coarse SAND (SM), medium dense	1	SS	8	7-13	
	4.0	Brown, moist, fine Sandy lean CLAY (CL), very stiff	2	SS	12	5-9-11-15 (20)	
	5	Brown, moist, Silty fine to coarse SAND (SM), loose to dense	3	SS	12	15-16-15-15 (31)	
			4	SS	24	11-8-5-4 (13)	
	9.5		5	SS	24	3-3-5-4 (8)	
	10	10.0 Brown, moist, fine Sandy lean CLAY (CL), medium stiff					
		Boring terminated at 10 feet below existing grade.					

TEST RESULTS

Plastic Limit X——X Liquid Limit
Water Content - ●
Penetration - ▨

10 20 30 40 50 60 70

Sample Type(s):

SS - Split Spoon

Notes:

This information pertains only to this boring and should not be interpreted as being indicitive of the site.

RECORD OF SUBSURFACE EXPLORATION

GET Solutions, Inc.
Geotechnical • Environmental • Testing

Virginia Beach
204 Grayson Road
Virginia Beach, VA 23642
757-518-1703

Williamsburg
1592-E Penniman Road
Williamsburg, VA 23185
757-564-6452

Elizabeth City
106 Capital Trace Unit E
Elizabeth City, NC 27909
252-335-9765

Jacksonville
415-A Western Blvd
Jacksonville, NC 28546
910-478-9915

BORING ID
B-2

PROJECT NAME: **Naval Air Station Patuxent River Repair Runways 14-32 & 6-24**
PROJECT NUMBER: **WM14-180G**
CLIENT: **Johnson, Mirmiran & Thompson, Inc.**
SURFACE ELEVATION (MSL) (ft):
PROJECT LOCATION: **Patuxent River, MD**
LOGGED BY:
BORING LOCATION: **See Attached Boring Location Plan**
DATE STARTED: **11/3/2014**
DRILLING METHOD(S): **Rotary wash "mud"**
DATE COMPLETED: **11/3/2014**
GROUNDWATER*: INITIAL (ft) ▽: ___ AFTER ___ HOURS (ft) ▼: ___ CAVE-IN (ft) ◌: ___
DRILLER: **GET Solutions, Inc.**

The initial groundwater readings are not intended to indicate the static groundwater level.

Elevation (ft)	Depth (ft)	STRATA DESCRIPTION	Strata Legend	Sample ID	Sample Type	Sample Recovery (in.)	Blow Counts (N-Values)	%<#200	TEST RESULTS (Plastic Limit ×——× Liquid Limit; Water Content - ●; Penetration - ▨; 10 20 30 40 50 60 70)
	0.4	4.75-in Asphalt							
	1.5	12.75-in Concrete		1	X				
	1.7	3.25-in Asphalt							
	2.7	11.5-in Concrete		2	X	10	10-15		
5		Brown, moist, Silty fine to coarse SAND (SM) with trace fine Gravel, medium dense		3	X	18	12-14-11-13 (25)	49	
	6.0	Brown, moist, Clayey fine to coarse SAND (SC) with trace fine Gravel, medium dense		4	X	24	13-11-8-7 (19)		
	8.5	Brown, moist, Silty fine to medium SAND (SM), medium dense		5	X	24	7-9-12-15 (21)		
10	10.0	Boring terminated at 10 feet below existing grade.							

Sample Type(s):
X SS - Split Spoon

Notes:

This information pertains only to this boring and should not be interpreted as being indicitive of the site.

RECORD OF SUBSURFACE EXPLORATION

GET Solutions, Inc.
Geotechnical • Environmental • Testing

Virginia Beach
204 Grayson Road
Virginia Beach, VA 23642
757-518-1703

Williamsburg
1592-E Penniman Road
Williamsburg, VA 23185
757-564-6452

Elizabeth City
106 Capital Trace Unit E
Elizabeth City, NC 27909
252-335-9765

Jacksonville
415-A Western Blvd
Jacksonville, NC 28546
910-478-9915

BORING ID B-3

PROJECT NAME: **Naval Air Station Patuxent River Repair Runways 14-32 & 6-24**
PROJECT NUMBER: **WM14-180G**
CLIENT: **Johnson, Mirmiran & Thompson, Inc.**
SURFACE ELEVATION (MSL) (ft):
PROJECT LOCATION: **Patuxent River, MD**
LOGGED BY:
BORING LOCATION: **See Attached Boring Location Plan**
DATE STARTED: **11/4/2014**
DRILLING METHOD(S): **Rotary wash "mud"**
DATE COMPLETED: **11/4/2014**
GROUNDWATER*: INITIAL (ft) ▽: ___ AFTER ___ HOURS (ft) ▼: ___ CAVE-IN (ft) ◌: ___
DRILLER: **GET Solutions, Inc.**

The initial groundwater readings are not intended to indicate the static groundwater level.

Elevation (ft)	Depth (ft)	STRATA DESCRIPTION	Sample ID	Sample Type	Sample Recovery (in.)	Blow Counts (N-Values)	%<#200
	0.4	4.75-in Asphalt					
	1.3	11-in Concrete					
		Brown, moist, Silty fine to coarse SAND (SM) with trace fine Gravel, dense to very dense	1	SS	10	8-20	20
			2	SS	24	19-30-27-26 (57)	
	5		3	SS	24	23-20-18-19 (38)	
	6.0	Brown, moist, poorly-graded fine to coarse SAND (SP-SM) with Silt, medium dense to dense	4	SS	18	11-14-18-16 (32)	
			5	SS	18	12-14-12-11 (26)	
	10	10.0					
		Boring terminated at 10 feet below existing grade.					

TEST RESULTS

Plastic Limit X——X Liquid Limit
Water Content - ●
Penetration - ▨

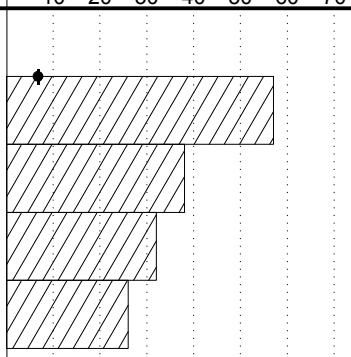

Sample Type(s):

SS - Split Spoon

Notes:

This information pertains only to this boring and should not be interpreted as being indicitive of the site.

RECORD OF SUBSURFACE EXPLORATION

GET Solutions, Inc.
Geotechnical • Environmental • Testing

Virginia Beach
204 Grayson Road
Virginia Beach, VA 23642
757-518-1703

Williamsburg
1592-E Penniman Road
Williamsburg, VA 23185
757-564-6452

Elizabeth City
106 Capital Trace Unit E
Elizabeth City, NC 27909
252-335-9765

Jacksonville
415-A Western Blvd
Jacksonville, NC 28546
910-478-9915

BORING ID B-4

PROJECT NAME: **Naval Air Station Patuxent River Repair Runways 14-32 & 6-24**
PROJECT NUMBER: **WM14-180G**
CLIENT: **Johnson, Mirmiran & Thompson, Inc.**
SURFACE ELEVATION (MSL) (ft):
PROJECT LOCATION: **Patuxent River, MD**
LOGGED BY:
BORING LOCATION: **See Attached Boring Location Plan**
DATE STARTED: **11/8/2014**
DRILLING METHOD(S): **Rotary wash "mud"**
DATE COMPLETED: **11/8/2014**
GROUNDWATER*: INITIAL (ft) ▽: ___ AFTER ___ HOURS (ft) ▼: ___ CAVE-IN (ft) ◌: ___
DRILLER: **GET Solutions, Inc.**

The initial groundwater readings are not intended to indicate the static groundwater level.

Elevation (ft)	Depth (ft)	STRATA DESCRIPTION	Sample ID	Sample Type	Sample Recovery (in.)	Blow Counts (N-Values)	%<#200
	0.7	8.75-in Asphalt					
	1.6	10.5-in Concrete	1	SS	6	12	
	2.0	Gray, moist, Silty fine to coarse SAND (SM) with trace fine to medium Gravel, medium dense "Possible Fill"	2	SS	20	8-9-13-12 (22)	
	4.0	Brown, moist, Clayey fine to medium SAND (SC), medium dense	3	SS	18	10-10-7-10 (17)	4
5		Brown, moist, poorly-graded fine to coarse SAND (SP) with trace fine Gravel, medium dense to very dense	4	SS	15	4-8-12-18 (20)	
			5	SS	12	20-23-32-37 (55)	
10	10.0	Boring terminated at 10 feet below existing grade.					

TEST RESULTS

Plastic Limit X——X Liquid Limit
Water Content - ●
Penetration - ▨

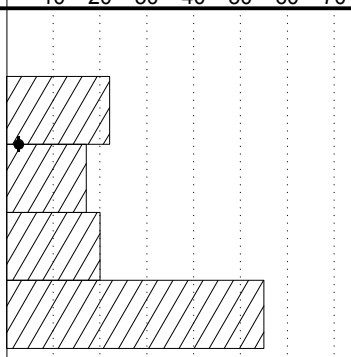

Sample Type(s):

SS - Split Spoon

Notes:

This information pertains only to this boring and should not be interpreted as being indicitive of the site.

RECORD OF SUBSURFACE EXPLORATION

GET Solutions, Inc.
Geotechnical • Environmental • Testing

Virginia Beach
204 Grayson Road
Virginia Beach, VA 23642
757-518-1703

Williamsburg
1592-E Penniman Road
Williamsburg, VA 23185
757-564-6452

Elizabeth City
106 Capital Trace Unit E
Elizabeth City, NC 27909
252-335-9765

Jacksonville
415-A Western Blvd
Jacksonville, NC 28546
910-478-9915

BORING ID B-5

PROJECT NAME: **Naval Air Station Patuxent River Repair Runways 14-32 & 6-24**
PROJECT NUMBER: **WM14-180G**
CLIENT: **Johnson, Mirmiran & Thompson, Inc.**
SURFACE ELEVATION (MSL) (ft):
PROJECT LOCATION: **Patuxent River, MD**
LOGGED BY:
BORING LOCATION: **See Attached Boring Location Plan**
DATE STARTED: **11/8/2014**
DRILLING METHOD(S): **Rotary wash "mud"**
DATE COMPLETED: **11/8/2014**
GROUNDWATER*: INITIAL (ft) ▽: ___ AFTER ___ HOURS (ft) ▼: ___ CAVE-IN (ft) ◌: ___
DRILLER: **GET Solutions, Inc.**

The initial groundwater readings are not intended to indicate the static groundwater level.

Elevation (ft)	Depth (ft)	STRATA DESCRIPTION	Sample ID	Sample Type	Sample Recovery (in.)	Blow Counts (N-Values)	%<#200
	0.7	8.5-in Asphalt					
	1.5	9.5-in Concrete	1	SS	8	10-8	
	2.0	Brown, moist, Silty fine to coarse SAND (SM) with trace fine Gravel, medium dense	2	SS	16	8-8-9-13 (17)	
	4.0	Brown, moist, Clayey fine to medium SAND (SC), medium dense	3	SS	18	14-14-15-16 (29)	
	5	Brown, moist, poorly-graded fine to coarse SAND (SP-SM) with Silt and trace fine Gravel, medium dense to very dense	4	SS	18	12-17-24-23 (41)	
			5	SS	24	25-36-50 (86)	9
	10	10.0 Boring terminated at 10 feet below existing grade.					

TEST RESULTS

Plastic Limit X——X Liquid Limit
Water Content - ●
Penetration - ▨

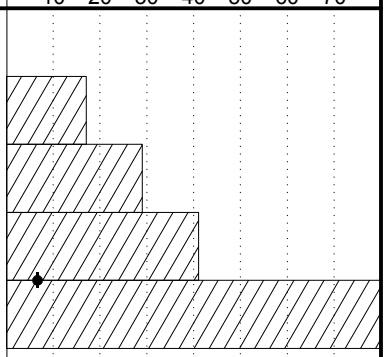

Sample Type(s):

SS - Split Spoon

Notes:

This information pertains only to this boring and should not be interpreted as being indicitive of the site.

RECORD OF SUBSURFACE EXPLORATION

GET Solutions, Inc.
Geotechnical • Environmental • Testing

Virginia Beach
204 Grayson Road
Virginia Beach, VA 23642
757-518-1703

Williamsburg
1592-E Penniman Road
Williamsburg, VA 23185
757-564-6452

Elizabeth City
106 Capital Trace Unit E
Elizabeth City, NC 27909
252-335-9765

Jacksonville
415-A Western Blvd
Jacksonville, NC 28546
910-478-9915

BORING ID B-6

PROJECT NAME: **Naval Air Station Patuxent River Repair Runways 14-32 & 6-24**
PROJECT NUMBER: **WM14-180G**
CLIENT: **Johnson, Mirmiran & Thompson, Inc.**
SURFACE ELEVATION (MSL) (ft):
PROJECT LOCATION: **Patuxent River, MD**
LOGGED BY:
BORING LOCATION: **See Attached Boring Location Plan**
DATE STARTED: **11/4/2014**
DRILLING METHOD(S): **Rotary wash "mud"**
DATE COMPLETED: **11/4/2014**
GROUNDWATER*: INITIAL (ft) ▽: ___ AFTER ___ HOURS (ft) ▼: ___ CAVE-IN (ft) ◌: ___
DRILLER: **GET Solutions, Inc.**

The initial groundwater readings are not intended to indicate the static groundwater level.

Elevation (ft)	Depth (ft)	STRATA DESCRIPTION	Sample ID	Sample Type	Sample Recovery (in.)	Blow Counts (N-Values)	%<#200
	0.2	2.25-in Asphalt					
	1.7	17.25-in Concrete					
		Brown, moist, Silty Clayey fine to coarse SAND (SC-SM), very loose to loose	1	SS	4	1-2	
			2	SS	12	2-2-4-5 (6)	20
5			3	SS	12	4-4-4-3 (8)	
	6.0	Gray, moist, poorly-graded fine to coarse SAND (SP), medium dense to dense	4	SS	12	3-5-15-17 (20)	
			5	SS	18	15-18-26-35 (44)	
10	10.0	Boring terminated at 10 feet below existing grade.					

TEST RESULTS

Plastic Limit X——X Liquid Limit
Water Content - ●
Penetration - ▨

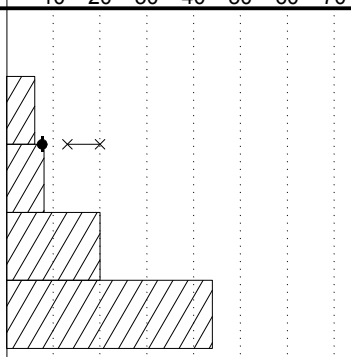

Sample Type(s):

SS - Split Spoon

Notes:

This information pertains only to this boring and should not be interpreted as being indicitive of the site.

RECORD OF SUBSURFACE EXPLORATION

GET Solutions, Inc.
Geotechnical • Environmental • Testing

Virginia Beach
204 Grayson Road
Virginia Beach, VA 23642
757-518-1703

Williamsburg
1592-E Penniman Road
Williamsburg, VA 23185
757-564-6452

Elizabeth City
106 Capital Trace Unit E
Elizabeth City, NC 27909
252-335-9765

Jacksonville
415-A Western Blvd
Jacksonville, NC 28546
910-478-9915

BORING ID B-7

PROJECT NAME: **Naval Air Station Patuxent River Repair Runways 14-32 & 6-24**
PROJECT NUMBER: **WM14-180G**
CLIENT: **Johnson, Mirmiran & Thompson, Inc.**
SURFACE ELEVATION (MSL) (ft):
PROJECT LOCATION: **Patuxent River, MD**
LOGGED BY:
BORING LOCATION: **See Attached Boring Location Plan**
DATE STARTED: **11/8/2014**
DRILLING METHOD(S): **Rotary wash "mud"**
DATE COMPLETED: **11/8/2014**
GROUNDWATER*: INITIAL (ft) ▽: ___ AFTER ___ HOURS (ft) ▼: ___ CAVE-IN (ft) ◌: ___
DRILLER: **GET Solutions, Inc.**

The initial groundwater readings are not intended to indicate the static groundwater level.

Elevation (ft)	Depth (ft)	STRATA DESCRIPTION	Strata Legend	Sample ID	Sample Type	Sample Recovery (in.)	Blow Counts (N-Values)	%<#200	TEST RESULTS (Plastic Limit X——X Liquid Limit; Water Content - ●; Penetration - ▨; 10 20 30 40 50 60 70)
	0.5	6.5-in Asphalt							
	1.2	8-in Concrete		1	X	2	50		
	1.4	Dark brown, moist, Silty fine to coarse SAND (SM) with fine to medium Gravel and Clay, very dense "Fill"							
		Auger Refusal Boring terminated at 1.42 feet below existing grade.							

Sample Type(s):

X SS - Split Spoon

Notes:

This information pertains only to this boring and should not be interpreted as being indicitive of the site.

RECORD OF SUBSURFACE EXPLORATION

GET Solutions, Inc.
Geotechnical • Environmental • Testing

Virginia Beach
204 Grayson Road
Virginia Beach, VA 23642
757-518-1703

Williamsburg
1592-E Penniman Road
Williamsburg, VA 23185
757-564-6452

Elizabeth City
106 Capital Trace Unit E
Elizabeth City, NC 27909
252-335-9765

Jacksonville
415-A Western Blvd
Jacksonville, NC 28546
910-478-9915

BORING ID B-8

PROJECT NAME: **Naval Air Station Patuxent River Repair Runways 14-32 & 6-24**
PROJECT NUMBER: **WM14-180G**
CLIENT: **Johnson, Mirmiran & Thompson, Inc.**
SURFACE ELEVATION (MSL) (ft):
PROJECT LOCATION: **Patuxent River, MD**
LOGGED BY:
BORING LOCATION: **See Attached Boring Location Plan**
DATE STARTED: **11/8/2014**
DRILLING METHOD(S): **Rotary wash "mud"**
DATE COMPLETED: **11/8/2014**
GROUNDWATER*: INITIAL (ft) ▽: ___ AFTER ___ HOURS (ft) ▼: ___ CAVE-IN (ft) ◌: ___
DRILLER: **GET Solutions, Inc.**

The initial groundwater readings are not intended to indicate the static groundwater level.

Elevation (ft)	Depth (ft)	STRATA DESCRIPTION	Sample ID	Sample Type	Sample Recovery (in.)	Blow Counts (N-Values)	%<#200
	0.5	5.75-in Asphalt					
	1.3	9.5-in Concrete					
	2.0	Brown, moist, Silty fine to coarse SAND (SM) with trace fine Gravel, medium dense	1	SS	8	10-14	58
	4.0	Brown, moist, fine Sandy lean CLAY (CL) with trace fine Gravel, very stiff	2	SS	18	9-10-10-10 (20)	
5	6.0	Mottled orange-gray, moist, Silty fine to medium SAND (SM), medium dense	3	SS	20	10-10-7-7 (17)	4
		Mottled orange-gray, moist, poorly-graded fine to coarse SAND (SP) with trace fine Gravel, medium dense	4	SS	20	7-6-11-9 (17)	
10	10.0		5	SS	24	10-9-15-19 (24)	

Boring terminated at 10 feet below existing grade.

TEST RESULTS

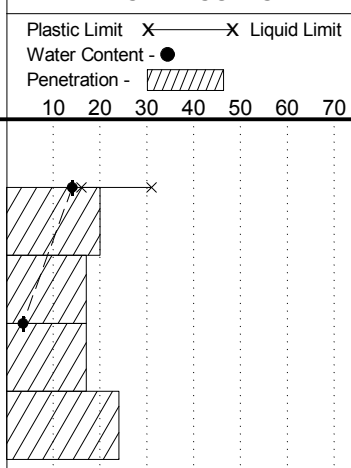

Sample Type(s):

SS - Split Spoon

Notes:

This information pertains only to this boring and should not be interpreted as being indicitive of the site.

RECORD OF SUBSURFACE EXPLORATION

GET Solutions, Inc.
Geotechnical • Environmental • Testing

Virginia Beach
204 Grayson Road
Virginia Beach, VA 23642
757-518-1703

Williamsburg
1592-E Penniman Road
Williamsburg, VA 23185
757-564-6452

Elizabeth City
106 Capital Trace Unit E
Elizabeth City, NC 27909
252-335-9765

Jacksonville
415-A Western Blvd
Jacksonville, NC 28546
910-478-9915

BORING ID B-9

PROJECT NAME: **Naval Air Station Patuxent River Repair Runways 14-32 & 6-24**
PROJECT NUMBER: **WM14-180G**
CLIENT: **Johnson, Mirmiran & Thompson, Inc.**
SURFACE ELEVATION (MSL) (ft):
PROJECT LOCATION: **Patuxent River, MD**
LOGGED BY:
BORING LOCATION: **See Attached Boring Location Plan**
DATE STARTED: **11/4/2014**
DRILLING METHOD(S): **Rotary wash "mud"**
DATE COMPLETED: **11/4/2014**
GROUNDWATER*: INITIAL (ft) ▽: ___ AFTER ___ HOURS (ft) ▼: ___ CAVE-IN (ft) ◌: ___
DRILLER: **GET Solutions, Inc.**

The initial groundwater readings are not intended to indicate the static groundwater level.

Elevation (ft)	Depth (ft)	STRATA DESCRIPTION	Sample ID	Sample Type	Sample Recovery (in.)	Blow Counts (N-Values)	%<#200
	0.4	5.25-in Asphalt					
	1.0	7-in Concrete					
		Mottled orange-gray, moist, Silty fine to medium SAND (SM) with varying amounts of Clay, loose	1	SS	6	5-3	
			2	SS	12	2-3-3-4 (6)	
	5		3	SS	24	3-4-4-4 (8)	
	6.0	Mottled orange-gray, moist, Clayey fine to medium SAND (SC), very loose to loose	4	SS	18	2-3-4-3 (7)	43
			5	SS	24	2-2-2-1 (4)	
	10	10.0					
		Boring terminated at 10 feet below existing grade.					

TEST RESULTS

Plastic Limit X——X Liquid Limit
Water Content - ●
Penetration - ▨

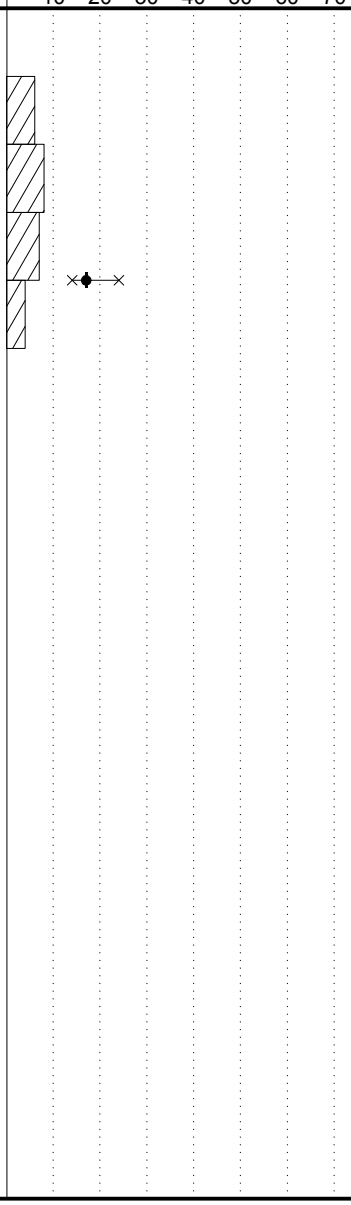

Sample Type(s):

SS - Split Spoon

Notes:

This information pertains only to this boring and should not be interpreted as being indicitive of the site.

RECORD OF SUBSURFACE EXPLORATION

GET Solutions, Inc.
Geotechnical • Environmental • Testing

Virginia Beach
204 Grayson Road
Virginia Beach, VA 23642
757-518-1703

Williamsburg
1592-E Penniman Road
Williamsburg, VA 23185
757-564-6452

Elizabeth City
106 Capital Trace Unit E
Elizabeth City, NC 27909
252-335-9765

Jacksonville
415-A Western Blvd
Jacksonville, NC 28546
910-478-9915

BORING ID B-10

PROJECT NAME: **Naval Air Station Patuxent River Repair Runways 14-32 & 6-24**
PROJECT NUMBER: **WM14-180G**
CLIENT: **Johnson, Mirmiran & Thompson, Inc.**
SURFACE ELEVATION (MSL) (ft):
PROJECT LOCATION: **Patuxent River, MD**
LOGGED BY:
BORING LOCATION: **See Attached Boring Location Plan**
DATE STARTED: **11/8/2014**
DRILLING METHOD(S): **Rotary wash "mud"**
DATE COMPLETED: **11/8/2014**
GROUNDWATER*: INITIAL (ft) ▽: ___ AFTER ___ HOURS (ft) ▼: ___ CAVE-IN (ft) ◌: ___
DRILLER: **GET Solutions, Inc.**

The initial groundwater readings are not intended to indicate the static groundwater level.

Elevation (ft)	Depth (ft)	STRATA DESCRIPTION	Strata Legend	Sample ID	Sample Type	Sample Recovery (in.)	Blow Counts (N-Values)	%<#200	TEST RESULTS (Plastic Limit ×——× Liquid Limit; Water Content - ●; Penetration - ▨; 10 20 30 40 50 60 70)
	0.5	5.5-in Asphalt							
	1.2	9-in Concrete		1	SS	8	5-4		
		Mottled orange-gray, moist, lean CLAY (CL) with trace to little fine Sand, medium stiff		2	SS	14	4-3-5-7 (8)		
	4.0								
5		Mottled orange-gray, moist, Silty fine to medium SAND (SM) with varying amounts of Clay, loose		3	SS	12	5-4-5-5 (9)		
				4	SS	18	4-4-4-4 (8)		
	8.0								
		Mottled orange-gray, moist, Silty fine to medium SAND (SM), medium dense		5	SS	24	4-5-6-5 (11)		
10	10.0								
		Boring terminated at 10 feet below existing grade.							

Sample Type(s):
SS - Split Spoon

Notes:

This information pertains only to this boring and should not be interpreted as being indicitive of the site.

APPENDIX IV

GENERALIZED SUBSURFACE SOIL PROFILE

GENERALIZED SOIL PROFILE

PROJECT NAME: **Naval Air Station Patuxent River Repair Runways 14-32 & 6-24**

PROJECT NUMBER: **WM14-180G**

PROJECT LOCATION: **Patuxent River, MD**

CLIENT: **Johnson, Mirmiran & Thompson, Inc.**

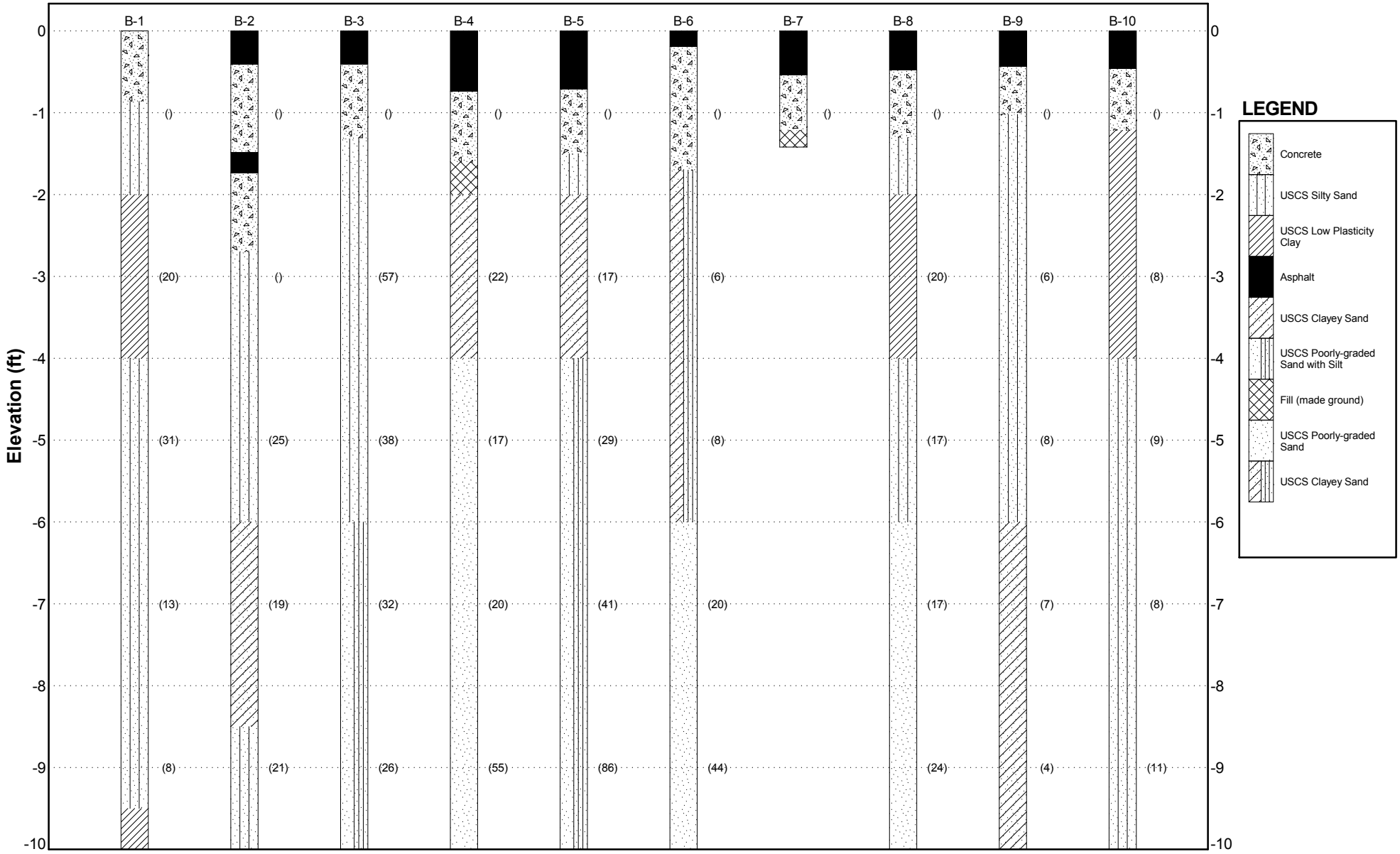

(Numerical Value) = Sample N-Value

APPENDIX V

PAVEMENT SECTION COMPOSITION AND DESCRIPTION

PAVEMENT SECTION COMPOSITION AND DESCRIPTION

Project Name: Naval Air Station Patuxent River Repair Runways 14-32 & 6-24

Date of Extraction: 4-Nov-2014

Project Number: WM14-180G

Project Location: Patuxent River, Maryland

Boring/Core Identification:

B-1

Boring/Core GPS Coordinates:

Latitude: -

Longitude: -

General Boring/Core Location: Runway 20 North of Runway 14

Pavement Section Composition:

Concrete: 10.5 in.

Void Underlying Pavement: no (yes/no)

Void Depth Below Pavement: N/A in.

Welded Wire Fabric (WWF) or Rebar: Rebar (WWF/Rebar/Both)

Embedment Depths from Top of Core: 6.5 in. Rebar

N/A in. Welded Wire Fabric

Vapor Barrier or Geotextile Fabric: no (yes/no)

Description of Vapor Barrier or Geotextile: N/A

Shallow Subgrade Soil Description: Brown, Moist, Silty fine to coarse SAND (SM)

General Core Notes and Remarks: -

Top of Core

Bottom of Core

GET Solutions, Inc.
Geotechnical • Environmental • Testing
1592-E Penniman Road
Williamsburg, Virginia 23185
Tel: 757-564-6452 Fax: 757-564-6453

PAVEMENT SECTION COMPOSITION AND DESCRIPTION

Project Name: Naval Air Station Patuxent River Repair Runways 14-32 & 6-24

Date of Extraction: 4-Nov-2014

Project Number: WM14-180G

Project Location: Patuxent River, Maryland

Boring/Core Identification:

B-2

Boring/Core GPS Coordinates:

Latitude: -

Longitude: -

General Boring/Core Location: Runway 14

Pavement Section Composition:

Intermediate Asphalt:	4.75	in.
Concrete:	12.75	in.
Intermediate Asphalt:	3.25	in.
Concrete:	11.5	in.

Void Underlying Pavement: no (yes/no)

Void Depth Below Pavement: N/A in.

Welded Wire Fabric (WWF) or Rebar: Rebar (WWF/Rebar/Both)

Embedment Depths from Top of Core:

23.25	in.	Rebar
N/A	in.	Welded Wire Fabric

Vapor Barrier or Geotextile Fabric: no (yes/no)

Description of Vapor Barrier or Geotextile: N/A

Shallow Subgrade Soil Description: Brown, Moist, Silty fine to coarse SAND (SM) with trace fine Gravel

General Core Notes and Remarks: -

Top of Core

Bottom of Core

GET Solutions, Inc.
Geotechnical • Environmental • Testing
1592-E Penniman Road
Williamsburg, Virginia 23185
Tel: 757-564-6452 Fax: 757-564-6453

PAVEMENT SECTION COMPOSITION AND DESCRIPTION

Project Name: Naval Air Station Patuxent River Repair Runways 14-32 & 6-24

Date of Extraction: 4-Nov-2014

Project Number: WM14-180G

Project Location: Patuxent River, Maryland

Boring/Core Identification:

B-3

Boring/Core GPS Coordinates:

Latitude: -

Longitude: -

General Boring/Core Location: Taxiway North of Runway 14

Pavement Section Composition:

Intermediate Asphalt: 4.75 in.

Concrete: 11 in.

Void Underlying Pavement: no (yes/no)

Void Depth Below Pavement: N/A in.

Welded Wire Fabric (WWF) or Rebar: Rebar (WWF/Rebar/Both)

Embedment Depths from Top of Core: 7.75 in. Rebar

N/A in. Welded Wire Fabric

Vapor Barrier or Geotextile Fabric: no (yes/no)

Description of Vapor Barrier or Geotextile: N/A

Shallow Subgrade Soil Description: Brown, Moist, Silty fine to coarse SAND (SM) with trace fine Gravel

General Core Notes and Remarks: -

Top of Core

Bottom of Core

GET Solutions, Inc.
Geotechnical • Environmental • Testing
1592-E Penniman Road
Williamsburg, Virginia 23185
Tel: 757-564-6452 Fax: 757-564-6453

PAVEMENT SECTION COMPOSITION AND DESCRIPTION

Project Name: Naval Air Station Patuxent River Repair Runways 14-32 & 6-24

Date of Extraction: 8-Nov-2014

Project Number: WM14-180G

Project Location: Patuxent River, Maryland

Boring/Core Identification:

B-4

Boring/Core GPS Coordinates:

Latitude: -

Longitude: -

General Boring/Core Location: Runway 24

Pavement Section Composition:

Intermediate Asphalt: 4.75 in.

Base Asphalt: 4 in.

Concrete: 10.5 in.

Void Underlying Pavement: no (yes/no)

Void Depth Below Pavement: N/A in.

Welded Wire Fabric (WWF) or Rebar: Rebar (WWF/Rebar/Both)

Embedment Depths from Top of Core: 15.75 & 18.75 in. Rebar

N/A in. Welded Wire Fabric

Vapor Barrier or Geotextile Fabric: no (yes/no)

Description of Vapor Barrier or Geotextile: N/A

Shallow Subgrade Soil Description: Gray, Moist, Silty fine to coarse SAND (SM) with trace fine to medium Gravel "Possible Fill"

General Core Notes and Remarks: -

Top of Core

Bottom of Core

GET Solutions, Inc.
Geotechnical • Environmental • Testing
1592-E Penniman Road
Williamsburg, Virginia 23185
Tel: 757-564-6452 Fax: 757-564-6453

PAVEMENT SECTION COMPOSITION AND DESCRIPTION

Project Name:	Naval Air Station Patuxent River Repair Runways 14-32 & 6-24	Date of Extraction:	8-Nov-2014
Project Number:	WM14-180G	Project Location:	Patuxent River, Maryland

Boring/Core Identification:

B-5

Boring/Core GPS Coordinates:

Latitude: -

Longitude: -

General Boring/Core Location: Runway 32

Pavement Section Composition:

Intermediate Asphalt:	4.25	in.	Void Underlying Pavement:	no	(yes/no)
Base Asphalt:	4.25	in.	Void Depth Below Pavement:	N/A	in.
Concrete:	9.5	in.			

Welded Wire Fabric (WWF) or Rebar: Both (WWF/Rebar/Both)

Embedment Depths from Top of Core: 14.5 in. Rebar

9.75 & 15.25 in. Welded Wire Fabric

Vapor Barrier or Geotextile Fabric: no (yes/no)

Description of Vapor Barrier or Geotextile: N/A

Shallow Subgrade Soil Description: Brown, Moist, Silty fine to coarse SAND (SM) with trace fine Gravel

General Core Notes and Remarks: -

Top of Core

Bottom of Core

GET Solutions, Inc.
Geotechnical • Environmental • Testing
1592-E Penniman Road
Williamsburg, Virginia 23185
Tel: 757-564-6452 Fax: 757-564-6453

PAVEMENT SECTION COMPOSITION AND DESCRIPTION

Project Name: Naval Air Station Patuxent River Repair Runways 14-32 & 6-24

Date of Extraction: 4-Nov-2014

Project Number: WM14-180G

Project Location: Patuxent River, Maryland

Boring/Core Identification:

B-6

Boring/Core GPS Coordinates:

Latitude: -

Longitude: -

General Boring/Core Location: Taxiway South of Runway 32

Pavement Section Composition:

Intermediate Asphalt: 2.25 in.

Concrete: 17.25 in.

Void Underlying Pavement: no (yes/no)

Void Depth Below Pavement: N/A in.

Welded Wire Fabric (WWF) or Rebar: N/A (WWF/Rebar/Both)

Embedment Depths from Top of Core: N/A in. Rebar

N/A in. Welded Wire Fabric

Vapor Barrier or Geotextile Fabric: no (yes/no)

Description of Vapor Barrier or Geotextile: N/A

Shallow Subgrade Soil Description: Brown, Moist, Silty Clayey fine to coarse SAND (SC-SM)

General Core Notes and Remarks: -

Top of Core

Bottom of Core

GET Solutions, Inc.
Geotechnical • Environmental • Testing
1592-E Penniman Road
Williamsburg, Virginia 23185
Tel: 757-564-6452 Fax: 757-564-6453

PAVEMENT SECTION COMPOSITION AND DESCRIPTION

Project Name: Naval Air Station Patuxent River Repair Runways 14-32 & 6-24

Date of Extraction: 8-Nov-2014

Project Number: WM14-180G

Project Location: Patuxent River, Maryland

Boring/Core Identification:

B-7

Boring/Core GPS Coordinates:

Latitude: -

Longitude: -

General Boring/Core Location: Runway 6

Pavement Section Composition:

Intermediate Asphalt: 6.5 in.

Concrete: 8 in.

Void Underlying Pavement: no (yes/no)

Void Depth Below Pavement: N/A in.

Welded Wire Fabric (WWF) or Rebar: N/A (WWF/Rebar/Both)

Embedment Depths from Top of Core: N/A in. Rebar

N/A in. Welded Wire Fabric

Vapor Barrier or Geotextile Fabric: no (yes/no)

Description of Vapor Barrier or Geotextile: N/A

Shallow Subgrade Soil Description: Dark Brown, Moist, Silty fine to coarse SAND (SM) with Clay and fine to medium Gravel "FILL"

General Core Notes and Remarks: -

Top of Core

Bottom of Core

GET Solutions, Inc.
Geotechnical • Environmental • Testing
1592-E Penniman Road
Williamsburg, Virginia 23185
Tel: 757-564-6452 Fax: 757-564-6453

PAVEMENT SECTION COMPOSITION AND DESCRIPTION

Project Name: Naval Air Station Patuxent River Repair Runways 14-32 & 6-24

Date of Extraction: 8-Nov-2014

Project Number: WM14-180G

Project Location: Patuxent River, Maryland

Boring/Core Identification:

B-8

Boring/Core GPS Coordinates:

Latitude: -

Longitude: -

General Boring/Core Location: Taxiway Southeast of Runway 6

Pavement Section Composition:

Intermediate Asphalt: 5.75 in.

Concrete: 9.5 in.

Void Underlying Pavement: no (yes/no)

Void Depth Below Pavement: N/A in.

Welded Wire Fabric (WWF) or Rebar: Both (WWF/Rebar/Both)

Embedment Depths from Top of Core: 8.25 & 10.25 in. Rebar

11.25 & 12.25 in. Welded Wire Fabric

Vapor Barrier or Geotextile Fabric: no (yes/no)

Description of Vapor Barrier or Geotextile: N/A

Shallow Subgrade Soil Description: Brown, Moist, Silty fine to coarse SAND (SM) with trace fine Gravel

General Core Notes and Remarks: -

Top of Core

Bottom of Core

GET Solutions, Inc.
Geotechnical • Environmental • Testing
1592-E Penniman Road
Williamsburg, Virginia 23185
Tel: 757-564-6452 Fax: 757-564-6453

PAVEMENT SECTION COMPOSITION AND DESCRIPTION

Project Name: Naval Air Station Patuxent River Repair Runways 14-32 & 6-24

Date of Extraction: 4-Nov-2014

Project Number: WM14-180G

Project Location: Patuxent River, Maryland

Boring/Core Identification:

B-9

Boring/Core GPS Coordinates:

Latitude: -

Longitude: -

General Boring/Core Location: Taxiway South of Runway 24

Pavement Section Composition:

Intermediate Asphalt: 5.25 in.

CTA: 7 in.

Void Underlying Pavement: no (yes/no)

Void Depth Below Pavement: N/A in.

Welded Wire Fabric (WWF) or Rebar: N/A (WWF/Rebar/Both)

Embedment Depths from Top of Core: N/A in. Rebar

N/A in. Welded Wire Fabric

Vapor Barrier or Geotextile Fabric: no (yes/no)

Description of Vapor Barrier or Geotextile: N/A

Shallow Subgrade Soil Description: Mottled Orange-Gray, Moist, Silty fine to medium SAND (SM) with Clay

General Core Notes and Remarks: -

Top of Core

Bottom of Core

GET Solutions, Inc.
Geotechnical • Environmental • Testing
1592-E Penniman Road
Williamsburg, Virginia 23185
Tel: 757-564-6452 Fax: 757-564-6453

PAVEMENT SECTION COMPOSITION AND DESCRIPTION

Project Name: Naval Air Station Patuxent River Repair Runways 14-32 & 6-24

Date of Extraction: 8-Nov-2014

Project Number: WM14-180G

Project Location: Patuxent River, Maryland

Boring/Core Identification:

B-10

Boring/Core GPS Coordinates:

Latitude: -

Longitude: -

General Boring/Core Location: Runway 24

Pavement Section Composition:

Intermediate Asphalt: 5.5 in.

Concrete: 9 in.

Void Underlying Pavement: no (yes/no)

Void Depth Below Pavement: N/A in.

Welded Wire Fabric (WWF) or Rebar: N/A (WWF/Rebar/Both)

Embedment Depths from Top of Core: N/A in. Rebar

N/A in. Welded Wire Fabric

Vapor Barrier or Geotextile Fabric: no (yes/no)

Description of Vapor Barrier or Geotextile: N/A

Shallow Subgrade Soil Description: Mottled Orange-Gray, Moist, lean CLAY (CL) with trace to little fine Sand

General Core Notes and Remarks: -

Top of Core

Bottom of Core

GET Solutions, Inc.
Geotechnical • Environmental • Testing
1592-E Penniman Road
Williamsburg, Virginia 23185
Tel: 757-564-6452 Fax: 757-564-6453

PAVEMENT SECTION COMPOSITION AND DESCRIPTION

Project Name: Naval Air Station Patuxent River Repair Runways 14-32 & 6-24

Date of Extraction: 12-Oct-2014

Project Number: WM14-180G

Project Location: Patuxent River, Maryland

Boring/Core Identification:

C-1

Boring/Core GPS Coordinates:

Latitude: -

Longitude: -

General Boring/Core Location: Runway 14

Pavement Section Composition:

Intermediate Asphalt: 3 in.

Concrete: 5.375 in.

Void Underlying Pavement: no (yes/no)

Void Depth Below Pavement: N/A in.

Welded Wire Fabric (WWF) or Rebar: N/A (WWF/Rebar/Both)

Embedment Depths from Top of Core: N/A in. Rebar

N/A in. Welded Wire Fabric

Vapor Barrier or Geotextile Fabric: no (yes/no)

Description of Vapor Barrier or Geotextile: N/A

Shallow Subgrade Soil Description: Not Encountered

General Core Notes and Remarks: -

Top of Core

Bottom of Core

GET Solutions, Inc.
Geotechnical • Environmental • Testing
1592-E Penniman Road
Williamsburg, Virginia 23185
Tel: 757-564-6452 Fax: 757-564-6453

PAVEMENT SECTION COMPOSITION AND DESCRIPTION

Project Name: Naval Air Station Patuxent River Repair Runways 14-32 & 6-24

Date of Extraction: 3-Nov-2014

Project Number: WM14-180G

Project Location: Patuxent River, Maryland

Boring/Core Identification:

C-4

Boring/Core GPS Coordinates:

Latitude: -

Longitude: -

General Boring/Core Location: Runway 14

Pavement Section Composition:

Intermediate Asphalt: 6.5 in.

Concrete: 11 in.

Void Underlying Pavement: no (yes/no)

Void Depth Below Pavement: N/A in.

Welded Wire Fabric (WWF) or Rebar: N/A (WWF/Rebar/Both)

Embedment Depths from Top of Core: N/A in. Rebar

N/A in. Welded Wire Fabric

Vapor Barrier or Geotextile Fabric: no (yes/no)

Description of Vapor Barrier or Geotextile: N/A

Shallow Subgrade Soil Description: Not Encountered

General Core Notes and Remarks: -

Top of Core

Bottom of Core

GET Solutions, Inc.
Geotechnical • Environmental • Testing
1592-E Penniman Road
Williamsburg, Virginia 23185
Tel: 757-564-6452 Fax: 757-564-6453

PAVEMENT SECTION COMPOSITION AND DESCRIPTION

Project Name: Naval Air Station Patuxent River Repair Runways 14-32 & 6-24

Date of Extraction: 3-Nov-2014

Project Number: WM14-180G

Project Location: Patuxent River, Maryland

Boring/Core Identification:

C-5

Boring/Core GPS Coordinates:

Latitude: -

Longitude: -

General Boring/Core Location: Runway 14

Pavement Section Composition:

Intermediate Asphalt: 3.5 in.

Base Asphalt: 4.75 in.

Void Underlying Pavement: no (yes/no)

Void Depth Below Pavement: N/A in.

Welded Wire Fabric (WWF) or Rebar: N/A (WWF/Rebar/Both)

Embedment Depths from Top of Core: N/A in. Rebar

N/A in. Welded Wire Fabric

Vapor Barrier or Geotextile Fabric: no (yes/no)

Description of Vapor Barrier or Geotextile: N/A

Shallow Subgrade Soil Description: Not Encountered

General Core Notes and Remarks: -

Top of Core

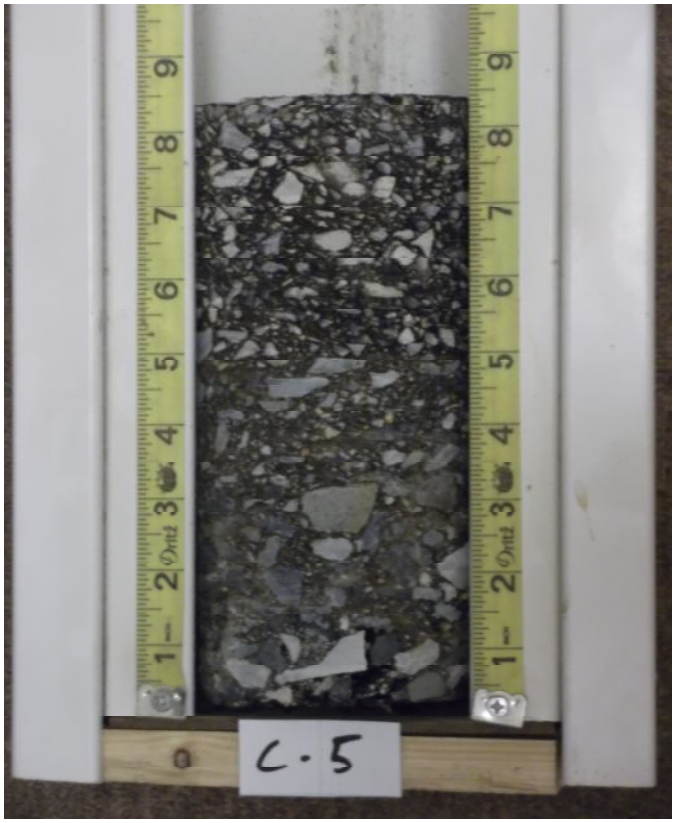

Bottom of Core

GET Solutions, Inc.
Geotechnical • Environmental • Testing
1592-E Penniman Road
Williamsburg, Virginia 23185
Tel: 757-564-6452 Fax: 757-564-6453

PAVEMENT SECTION COMPOSITION AND DESCRIPTION

Project Name: Naval Air Station Patuxent River Repair Runways 14-32 & 6-24

Date of Extraction: 4-Nov-2014

Project Number: WM14-180G

Project Location: Patuxent River, Maryland

Boring/Core Identification:

C-6

Boring/Core GPS Coordinates:

Latitude: -

Longitude: -

General Boring/Core Location: Runway 32

Pavement Section Composition:

Intermediate Asphalt: 6.75 in.

Base Asphalt: 4.5 in.

Void Underlying Pavement: no (yes/no)

Void Depth Below Pavement: N/A in.

Welded Wire Fabric (WWF) or Rebar: N/A (WWF/Rebar/Both)

Embedment Depths from Top of Core: N/A in. Rebar

N/A in. Welded Wire Fabric

Vapor Barrier or Geotextile Fabric: no (yes/no)

Description of Vapor Barrier or Geotextile: N/A

Shallow Subgrade Soil Description: Not Encountered

General Core Notes and Remarks: -

Top of Core

Bottom of Core

GET Solutions, Inc.
Geotechnical • Environmental • Testing
1592-E Penniman Road
Williamsburg, Virginia 23185
Tel: 757-564-6452 Fax: 757-564-6453

PAVEMENT SECTION COMPOSITION AND DESCRIPTION

Project Name: Naval Air Station Patuxent River Repair Runways 14-32 & 6-24

Date of Extraction: 4-Nov-2014

Project Number: WM14-180G

Project Location: Patuxent River, Maryland

Boring/Core Identification:

C-7

Boring/Core GPS Coordinates:

Latitude: -

Longitude: -

General Boring/Core Location: Runway 32

Pavement Section Composition:

Intermediate Asphalt:	3.75	in.
Intermediate Asphalt:	3	in.
Intermediate Asphalt:	3	in.
Intermediate Asphalt:	1.5	in.

Void Underlying Pavement: no (yes/no)

Void Depth Below Pavement: N/A in.

Welded Wire Fabric (WWF) or Rebar: N/A (WWF/Rebar/Both)

Embedment Depths from Top of Core:

N/A	in.	Rebar
N/A	in.	Welded Wire Fabric

Vapor Barrier or Geotextile Fabric: no (yes/no)

Description of Vapor Barrier or Geotextile: N/A

Shallow Subgrade Soil Description: Not Encountered

General Core Notes and Remarks: -

Top of Core

Bottom of Core

GET Solutions, Inc.
Geotechnical • Environmental • Testing
1592-E Penniman Road
Williamsburg, Virginia 23185
Tel: 757-564-6452 Fax: 757-564-6453

PAVEMENT SECTION COMPOSITION AND DESCRIPTION

Project Name: Naval Air Station Patuxent River Repair Runways 14-32 & 6-24

Date of Extraction: 11-Nov-2014

Project Number: WM14-180G

Project Location: Patuxent River, Maryland

Boring/Core Identification:

C-10

Boring/Core GPS Coordinates:

Latitude: -

Longitude: -

General Boring/Core Location: Runway 6

Pavement Section Composition:

Intermediate Asphalt: 4.5 in.

Base Asphalt: 3.5 in.

Void Underlying Pavement: no (yes/no)

Void Depth Below Pavement: N/A in.

Welded Wire Fabric (WWF) or Rebar: N/A (WWF/Rebar/Both)

Embedment Depths from Top of Core: N/A in. Rebar

N/A in. Welded Wire Fabric

Vapor Barrier or Geotextile Fabric: no (yes/no)

Description of Vapor Barrier or Geotextile: N/A

Shallow Subgrade Soil Description: Not Encountered

General Core Notes and Remarks: -

Top of Core

Bottom of Core

GET Solutions, Inc.
Geotechnical • Environmental • Testing
1592-E Penniman Road
Williamsburg, Virginia 23185
Tel: 757-564-6452 Fax: 757-564-6453

PAVEMENT SECTION COMPOSITION AND DESCRIPTION

Project Name: Naval Air Station Patuxent River Repair Runways 14-32 & 6-24

Date of Extraction: 11-Nov-2014

Project Number: WM14-180G

Project Location: Patuxent River, Maryland

Boring/Core Identification:

C-11

Boring/Core GPS Coordinates:

Latitude: -

Longitude: -

General Boring/Core Location: Runway 6

Pavement Section Composition:

Intermediate Asphalt: 4 in.

Base Asphalt: 2.5 in.

Void Underlying Pavement: no (yes/no)

Void Depth Below Pavement: N/A in.

Welded Wire Fabric (WWF) or Rebar: N/A (WWF/Rebar/Both)

Embedment Depths from Top of Core: N/A in. Rebar

N/A in. Welded Wire Fabric

Vapor Barrier or Geotextile Fabric: no (yes/no)

Description of Vapor Barrier or Geotextile: N/A

Shallow Subgrade Soil Description: Not Encountered

General Core Notes and Remarks: -

Top of Core

Bottom of Core

GET Solutions, Inc.
Geotechnical • Environmental • Testing
1592-E Penniman Road
Williamsburg, Virginia 23185
Tel: 757-564-6452 Fax: 757-564-6453

PAVEMENT SECTION COMPOSITION AND DESCRIPTION

Project Name: Naval Air Station Patuxent River Repair Runways 14-32 & 6-24

Date of Extraction: 11-Nov-2014

Project Number: WM14-180G

Project Location: Patuxent River, Maryland

Boring/Core Identification:

C-12

Boring/Core GPS Coordinates:

Latitude: -

Longitude: -

General Boring/Core Location: Runway 6

Pavement Section Composition:

Intermediate Asphalt: 3.75 in.

Base Asphalt: 3.25 in.

Base Asphalt: 1.25 in.

Void Underlying Pavement: no (yes/no)

Void Depth Below Pavement: N/A in.

Welded Wire Fabric (WWF) or Rebar: N/A (WWF/Rebar/Both)

Embedment Depths from Top of Core: N/A in. Rebar

N/A in. Welded Wire Fabric

Vapor Barrier or Geotextile Fabric: no (yes/no)

Description of Vapor Barrier or Geotextile: N/A

Shallow Subgrade Soil Description: Not Encountered

General Core Notes and Remarks: -

Top of Core

Bottom of Core

GET Solutions, Inc.
Geotechnical • Environmental • Testing
1592-E Penniman Road
Williamsburg, Virginia 23185
Tel: 757-564-6452 Fax: 757-564-6453

PAVEMENT SECTION COMPOSITION AND DESCRIPTION

Project Name: Naval Air Station Patuxent River Repair Runways 14-32 & 6-24

Date of Extraction: 11-Nov-2014

Project Number: WM14-180G

Project Location: Patuxent River, Maryland

Boring/Core Identification:

C-13

Boring/Core GPS Coordinates:

Latitude: -

Longitude: -

General Boring/Core Location: Runway 24

Pavement Section Composition:

Intermediate Asphalt: 4 in.

Base Asphalt: 3.75 in.

Void Underlying Pavement: no (yes/no)

Void Depth Below Pavement: N/A in.

Welded Wire Fabric (WWF) or Rebar: N/A (WWF/Rebar/Both)

Embedment Depths from Top of Core: N/A in. Rebar

N/A in. Welded Wire Fabric

Vapor Barrier or Geotextile Fabric: no (yes/no)

Description of Vapor Barrier or Geotextile: N/A

Shallow Subgrade Soil Description: Not Encountered

General Core Notes and Remarks: -

Top of Core

Bottom of Core

GET Solutions, Inc.
Geotechnical • Environmental • Testing
1592-E Penniman Road
Williamsburg, Virginia 23185
Tel: 757-564-6452 Fax: 757-564-6453

PAVEMENT SECTION COMPOSITION AND DESCRIPTION

Project Name: Naval Air Station Patuxent River Repair Runways 14-32 & 6-24

Date of Extraction: 11-Nov-2014

Project Number: WM14-180G

Project Location: Patuxent River, Maryland

Boring/Core Identification:

C-14

Boring/Core GPS Coordinates:

Latitude: -

Longitude: -

General Boring/Core Location: Runway 24

Pavement Section Composition:

Intermediate Asphalt: 5 in.

Base Asphalt: 3.5 in.

Void Underlying Pavement: no (yes/no)

Void Depth Below Pavement: N/A in.

Welded Wire Fabric (WWF) or Rebar: N/A (WWF/Rebar/Both)

Embedment Depths from Top of Core: N/A in. Rebar

N/A in. Welded Wire Fabric

Vapor Barrier or Geotextile Fabric: no (yes/no)

Description of Vapor Barrier or Geotextile: N/A

Shallow Subgrade Soil Description: Not Encountered

General Core Notes and Remarks: -

Top of Core

Bottom of Core

GET Solutions, Inc.
Geotechnical • Environmental • Testing
1592-E Penniman Road
Williamsburg, Virginia 23185
Tel: 757-564-6452 Fax: 757-564-6453

PAVEMENT SECTION COMPOSITION AND DESCRIPTION

Project Name: Naval Air Station Patuxent River Repair Runways 14-32 & 6-24

Date of Extraction: 11-Nov-2014

Project Number: WM14-180G

Project Location: Patuxent River, Maryland

Boring/Core Identification:

C-15

Boring/Core GPS Coordinates:

Latitude: -

Longitude: -

General Boring/Core Location: Runway 24

Pavement Section Composition:

Intermediate Asphalt: 3.75 in.

Base Asphalt: 2.75 in.

Void Underlying Pavement: no (yes/no)

Void Depth Below Pavement: N/A in.

Welded Wire Fabric (WWF) or Rebar: N/A (WWF/Rebar/Both)

Embedment Depths from Top of Core: N/A in. Rebar

N/A in. Welded Wire Fabric

Vapor Barrier or Geotextile Fabric: no (yes/no)

Description of Vapor Barrier or Geotextile: N/A

Shallow Subgrade Soil Description: Not Encountered

General Core Notes and Remarks: -

Top of Core

Bottom of Core

GET Solutions, Inc.
Geotechnical • Environmental • Testing
1592-E Penniman Road
Williamsburg, Virginia 23185
Tel: 757-564-6452 Fax: 757-564-6453

PAVEMENT SECTION COMPOSITION AND DESCRIPTION

Project Name: Naval Air Station Patuxent River Repair Runways 14-32 & 6-24

Date of Extraction: 11-Nov-2014

Project Number: WM14-180G

Project Location: Patuxent River, Maryland

Boring/Core Identification:

C-16

Boring/Core GPS Coordinates:

Latitude: -

Longitude: -

General Boring/Core Location: Runway 24

Pavement Section Composition:

Intermediate Asphalt: 3.5 in.

Base Asphalt: 4 in.

Void Underlying Pavement: no (yes/no)

Void Depth Below Pavement: N/A in.

Welded Wire Fabric (WWF) or Rebar: N/A (WWF/Rebar/Both)

Embedment Depths from Top of Core: N/A in. Rebar

N/A in. Welded Wire Fabric

Vapor Barrier or Geotextile Fabric: no (yes/no)

Description of Vapor Barrier or Geotextile: N/A

Shallow Subgrade Soil Description: Not Encountered

General Core Notes and Remarks: -

Top of Core

Bottom of Core

GET Solutions, Inc.
Geotechnical • Environmental • Testing
1592-E Penniman Road
Williamsburg, Virginia 23185
Tel: 757-564-6452 Fax: 757-564-6453

PAVEMENT SECTION COMPOSITION AND DESCRIPTION

Project Name: Naval Air Station Patuxent River Repair Runways 14-32 & 6-24

Date of Extraction: 11-Nov-2014

Project Number: WM14-180G

Project Location: Patuxent River, Maryland

Boring/Core Identification:

C-17

Boring/Core GPS Coordinates:

Latitude: -

Longitude: -

General Boring/Core Location: Runway 24

Pavement Section Composition:

Intermediate Asphalt: 4.25 in.

Base Asphalt: 3.5 in.

Void Underlying Pavement: no (yes/no)

Void Depth Below Pavement: N/A in.

Welded Wire Fabric (WWF) or Rebar: N/A (WWF/Rebar/Both)

Embedment Depths from Top of Core: N/A in. Rebar

N/A in. Welded Wire Fabric

Vapor Barrier or Geotextile Fabric: no (yes/no)

Description of Vapor Barrier or Geotextile: N/A

Shallow Subgrade Soil Description: Not Encountered

General Core Notes and Remarks: -

Top of Core

Bottom of Core

GET Solutions, Inc.
Geotechnical • Environmental • Testing
1592-E Penniman Road
Williamsburg, Virginia 23185
Tel: 757-564-6452 Fax: 757-564-6453

PAVEMENT SECTION COMPOSITION AND DESCRIPTION

Project Name: Naval Air Station Patuxent River Repair Runways 14-32 & 6-24

Date of Extraction: 3-Nov-2014

Project Number: WM14-180G

Project Location: Patuxent River, Maryland

Boring/Core Identification:

C-19

Boring/Core GPS Coordinates:

Latitude: -

Longitude: -

General Boring/Core Location: Runway 20 South of Runway 14

Pavement Section Composition:

Intermediate Asphalt:	2.5	in.
Intermediate Asphalt:	12.75	in.
Intermediate Asphalt:	5	in.
Intermediate Asphalt:	2	
Concrete:	10.25	in.

Void Underlying Pavement: no (yes/no)

Void Depth Below Pavement: N/A in.

Welded Wire Fabric (WWF) or Rebar: N/A (WWF/Rebar/Both)

Embedment Depths from Top of Core:

N/A	in.	Rebar
N/A	in.	Welded Wire Fabric

Vapor Barrier or Geotextile Fabric: no (yes/no)

Description of Vapor Barrier or Geotextile: N/A

Shallow Subgrade Soil Description: Not Encountered

General Core Notes and Remarks: Paving fabric was observed between the first and second asphalt layers.

Top of Core

Bottom of Core

GET Solutions, Inc.
Geotechnical • Environmental • Testing
1592-E Penniman Road
Williamsburg, Virginia 23185
Tel: 757-564-6452 Fax: 757-564-6453

PAVEMENT SECTION COMPOSITION AND DESCRIPTION

Project Name: Naval Air Station Patuxent River Repair Runways 14-32 & 6-24

Date of Extraction: 4-Nov-2014

Project Number: WM14-180G

Project Location: Patuxent River, Maryland

Boring/Core Identification:

C-20

Boring/Core GPS Coordinates:

Latitude: -

Longitude: -

General Boring/Core Location: Taxiway Southeast of Runway 24

Pavement Section Composition:

Intermediate Asphalt: 1.25 in.

Intermediate Asphalt: 5 in.

Void Underlying Pavement: no (yes/no)

Void Depth Below Pavement: N/A in.

Welded Wire Fabric (WWF) or Rebar: N/A (WWF/Rebar/Both)

Embedment Depths from Top of Core: N/A in. Rebar

N/A in. Welded Wire Fabric

Vapor Barrier or Geotextile Fabric: no (yes/no)

Description of Vapor Barrier or Geotextile: N/A

Shallow Subgrade Soil Description: Not Encountered

General Core Notes and Remarks: -

Top of Core

Bottom of Core

GET Solutions, Inc.
Geotechnical • Environmental • Testing
1592-E Penniman Road
Williamsburg, Virginia 23185
Tel: 757-564-6452 Fax: 757-564-6453

SUPPLEMENTAL REPORT OF SUBSURFACE INVESTIGATION SERVICES

Naval Air Station Patuxent River
Repair Runways 14-32 & 6-24

NAS PAX River, Patuxent River, Maryland

G E T Project No: WM14-180G

November 12, 2015

PREPARED FOR:

1592-E Penniman Road • Williamsburg, VA 23185
Phone: (757)-564-6452
www.getsolutionsinc.com

November 12, 2015

TO: **Johnson, Mirmiran and Thompson**
272 Bendix Road, Suite 260
Patuxent River, VA 23452

Attn: Mr. Walter Moore

RE: Supplemental Report of Subsurface Investigation and Geotechnical Engineering Services
Naval Air Station Patuxent River
Repair Runways 14-32 & 6-24
NAS PAX River, Patuxent River, Maryland
G E T Project No: WM14-180G

Dear Mr. Moore:

In compliance with your instructions, we have completed our subsurface Investigation and Geotechnical Engineering Services for the referenced project. The results of this study, together with our recommendations, are presented in this report.

Often, because of design and construction details that occur on a project, questions arise concerning subsurface conditions. **G E T Solutions, Inc.** would be pleased to continue its role as Geotechnical Engineer during the project implementation.

Thank you for the opportunity to work with you on this project. We trust that the information contained herein meets your immediate need, and should you have any questions or if we could be of further assistance, please do not hesitate to contact us.

Respectfully Submitted,
G E T Solutions, Inc.

Joseph R. Robinson, P.E.
Project Engineer
VA Reg. # 050157

D. Mark Scholefield, P.E.
Senior Project Engineer
MD Reg. # 0026646

STATE OF MARYLAND
D. MARK SCHOLEFIELD
No. 0026646
PROFESSIONAL ENGINEER

Copies: (1) Client

1592-E Penniman Road • Williamsburg, VA 23185 • Phone: (757)-564-6452 • Fax: (757)-564-6453
info@getsolutionsinc.com

TABLE OF CONTENTS

1.0 PROJECT INFORMATION 1

1.1 Project Authorization 1
1.2 Project and Site Description 1
1.3 Purpose and Scope of Services 1

2.0 FIELD AND LABORATORY PROCEDURES 2

2.1 Field Exploration 2
2.2 Laboratory Testing 3

3.0 SITE AND SUBSURFACE CONDITIONS 3

3.1 Site Geology 3
3.2 Existing Pavement Conditions 4
3.3 Subsurface Soil Conditions 4
3.4 Groundwater Information 5

4.0 EVALUATION AND RECOMMENDATIONS (Control Building, B-18 & B-19 only) 6

4.1 Clearing and Grading 6
4.2 Subgrade Preparation 7
4.3 Structural Fill and Placement 7
4.4 Suitability of On-Site Soils 8
4.5 Foundation Design Recommendations 8
4.6 Settlements 8
4.7 Foundation Excavations 9
4.8 Slab-on-Grade Design 9
4.9 Seismic Evaluation 10

5.0 CONSTRUCTION CONSIDERATIONS 10

5.1 Drainage and Groundwater Concerns 10
5.2 Site Utility Installation 11
5.3 Excavations 11

6.0 REPORT LIMITATIONS 12

APPENDIX I - BORING LOCATION PLAN
APPENDIX II - SOIL CLASSIFICATION SYSTEM
APPENDIX III - BORING LOGS
APPENDIX IV - GENERALIZED SOIL PROFILE
APPENIDX V - PAVEMENT SECTION COMPOSITION AND DESCRIPTION

1.0 PROJECT INFORMATION

1.1 Project Authorization

G E T Solutions, Inc. has completed our supplemental subsurface Investigation and geotechnical engineering services for the Repair Runways 14-32 & 6-24 project at NAS Patuxent River in Patuxent River, Maryland. The services provided for this project were in general accordance with **G E T** Solutions, Inc. Proposal Nos: PWM14-267G and PVB15-551G. Authorization to proceed with our subsurface investigation and geotechnical engineering services was received from Mr. Walter Moore in the form of an electronic mail.

1.2 Project and Site Description

The project site is located at Naval Air Station (NAS) Patuxent River in Patuxent River, Maryland. The project will consist of asphalt milling and overlaying and concrete repairs, full depth pavement replacement and the installation of duct banks along runways 14-32 & 6-24 at the Patuxent River Airfield. The development at this site is also expected to consist of constructing a new roughly 1,000 square foot single story control building. The structure is expected to be of CMU wall design with the first floor supported on grade. The wall loads associated with this structure are not expected to exceed 3 kips per linear foot. In addition, the construction at this site will consist of installing new associated infrastructure components (lighting, electrical, signage, striping, etc.). The construction will also include repairs/reconstruction of the runways' overruns.

If any of the noted information is incorrect or has changed, please inform **G E T Solutions, Inc.** so that we may amend the recommendations presented in this report, if appropriate.

1.3 Purpose and Scope of Services

The purpose of this study was to obtain information on the general subsurface conditions at the proposed project site as related to the proposed construction. The subsurface conditions encountered were then evaluated with respect to the available project characteristics. In this regard, engineering assessments for the following items were formulated:

1. General assessment of the soils revealed by the borings performed on the runways, EMP towaway, compass rose and within the proposed control building's footprint.
2. General location and description of potentially deleterious material encountered in the borings that may interfere with construction progress or site feature/structure performance, including existing fills or surficial/subsurface organics.
3. Soil subgrade preparation, including stripping, grading and compaction. Engineering criteria for placement and compaction of approved structural fill material.
4. Construction considerations for fill placement, subgrade preparation, and foundation excavations.
5. Evaluation of the on-site soils for re-use as structural fill.

6. Feasibility of utilizing a shallow foundation system for support of the proposed structure. Design parameters required for the foundation system, including foundation sizes, allowable bearing pressures, foundation levels and expected total and differential settlements.

7. Seismic site class determination in accordance with the 2012 International Building Code.

It is noted that pavement assessment, evaluation and design are to be performed by others. Also, the scope of services did not include an environmental assessment for determining the presence or absence of wetlands or hazardous or toxic material in the soil, bedrock, surface water, groundwater or air, on or below or around this site.

2.0 FIELD AND LABORATORY PROCEDURES

2.1 Field Exploration

Prior to field activities, all permits and clearances were obtained from the corresponding NAS PAX River authorities. In order to identify the pavement composition and also to facilitate the soil test borings, eighteen (18) 4-inch diameter pavement core samples (designated as B-11 through B-17 and C-32 through C-42) were extracted along the runways, taxiways, EMP towaway and compass rose. In order to explore the general subsurface soil types, nine (9) 12 to 17-foot deep Standard Penetration Test (SPT) borings (designated as B-11 through B-19) were drilled throughout the runways, EMP towaway, compass rose and control building footprint. It is noted that proposed borings B-20 and B-21 for the airfield lighting vault were omitted at the request of the client. This structure is being relocated and a subsurface investigation for the structure will be performed at a later date. Upon completion of each core/borehole, the boreholes were backfilled with cement grout and the pavement section was patched with Quikrete© fast setting concrete.

The SPT borings were performed with the use of hollow stem auger and rotary wash “mud” drilling procedures in general accordance with ASTM D 1586. The tests were performed continuously from the existing ground surface to a depth of 12-feet and at 5 foot intervals thereafter. The soil samples were obtained with a standard 1.4” I.D., 2” O.D., 30” long split-spoon sampler. The sampler was driven with blows of a 140 lb. hammer falling 30 inches, using an automatic hammer. The number of blows required to drive the sampler each 6-inch increment of penetration was recorded and is shown on the boring logs. The sum of the second and third penetration increments is termed the SPT N-value (uncorrected for automatic hammer). A representative portion of each disturbed split-spoon sample was collected with each SPT, placed in a glass jar, sealed, labeled, and returned to our laboratory for review.

The core and boring locations were established by the design team and located in the field by a representative of **G E T Solutions, Inc.** using a hand held Global Positioning System (GPS) device. The approximate boring locations are shown on the attached “Boring Location Plan” (Appendix I), which was reproduced based on a site plan provided by the client. The soil test boring logs and generalized soil profiles are presented in Appendix III and Appendix IV, respectively.

2.2 Laboratory Testing

Representative portions of all soil samples collected during drilling were sealed in glass jars, labeled and transferred to our laboratory for classification and analysis. A Geotechnical Engineer performed the soil classification in general accordance with ASTM Specification D 2487. A summary of the soil classification system is provided in Appendix II.

Five (5) representative soil samples were selected and subjected to natural moisture, Atterberg limits, and -#200 sieve wash testing and analysis in order to corroborate the visual classification. These test results are tabulated below (Table I) and are also presented on the "Boring Log" sheets (Appendix III).

Table I - Laboratory Test Results

Boring No.	Depth* (Feet)	Natural Moisture (%)	Percent Passing #200	Atterberg Limits (LL/PL/PI)	USCS Classification
B-11	8-10	3	2	Non-Plastic	SP
B-12	4-6	16	73	30/18/12	CL
B-14	6-8	8	20	Non-Plastic	SM
B-16	10-12	27	3	Non-Plastic	SP
B-19	2-4	12	49	26/15/11	SC

**Depth below existing grade.*

3.0 SITE AND SUBSURFACE CONDITIONS

3.1 Site Geology

The project site lies within a major physiographic province called the Atlantic Coastal Plain. Numerous transgressions and regressions of the Atlantic Ocean have deposited marine, lagoonal, and fluvial (stream lain) sediments. The regional geology is very complex, and generally consists of interbedded layers of varying mixtures of sands, silts and clays. Based on our review of existing geologic and soil boring data, the geologic stratigraphy encountered in our subsurface explorations generally consisted of marine deposited sands and clays.

In order to obtain information regarding historical land use of the project site and its vicinity, we reviewed United States Geological Survey (USGS) geological maps. From this review, it appears that the subgrade soils within the project alignment are natural.

3.2 Existing Pavement Conditions

The results of our coring exploration program are presented below (Table II). More detailed information is provided in the "Pavement Section Composition and Descriptions" presented in Appendix V.

Table II - Pavement Section Composition

Boring Location	Runway	Asphalt Thickness (inch)	Concrete Thickness (inch)	Subgrade USCS Classification
B-11	6-24	12	10	Lean CLAY (CL)
B-12	6-24	9.25	9.75	Lean CLAY (CL)
B-13	6-24	7.75	-	Clayey SAND (SC)
B-14	EMP Towaway	-	12	Lean CLAY (CL)
B-15	EMP Towaway	-	14.5	Lean CLAY (CL)
B-16	Compass Rose	-	8	Lean CLAY (CL)
B-17	Compass Rose	-	7.5	Silty SAND (SM)
C-32	Taxiway B	8.75	7.5	Not Explored
C-33	2-20	11.25	10.5	Not Explored
C-34	2-20	2.75	11.25	Not Explored
C-35	Taxiway C	3.75	6	Not Explored
C-36	Taxiway E	3.75	10	Not Explored
C-37	Taxiway A	-	14	Not Explored
C-38	6-24	-	13	Not Explored
C-39	Taxiway G	7.75	10.25	Not Explored
C-40	6-24	7.75	10	Not Explored
C-41	EMP Towaway	5.5	5	Not Explored
C-42	6-24	-	22	Not Explored

It is noted that paving fabric and reinforcing steel were encountered at some of the core/boring locations at varying depths across the site. A detailed description of the paving fabric, reinforcing steel types and depths encountered are included in Appendix V. As noted in Section 2.1, at the direction of the client, core/boring samples were not obtained at the proposed B-20 and B-21 locations.

3.3 Subsurface Soil Conditions

The results of our soil test borings indicated the presence of asphalt and/or concrete pavement at the boring locations (excluding borings B-18 and B-19). The results of our soil test borings at the location of borings B-18 and B-19 indicated the presence of 2 to 3 inches of topsoil material. Underlying the topsoil and pavement sections and extending to the boring termination depths of 12, 15 and 17 feet below existing site grades the natural subsurface soils were generally arranged in a two layer configuration. The results of our soil test borings are summarized on the following page (Table III).

Table III - Summary of Soil Test Borings

AVERAGE DEPTH (Feet)	STRATUM	DESCRIPTION	RANGES OF SPT(1) UNCORRECTED N-VALUES
0 to 0.17 - 0.25	Topsoil	2 to 3 inches of Topsoil (B-18 and B-19 only)	-
0 to 0.63 - 1.83	Pavement Section	*(Details in Table II)*	-
0.17 - 1.83 to 2 - 6	I (Not encountered at B-13 and B-17)	Lean CLAY (CL) with varying amounts of Silt and Sand.	4 - 18
0.63 - 6 to 12 - 17	II	SAND (SC, SM, SP) with varying amounts of Silt, Clay and Gravel. **A deposit of medium stiff, lean CLAY (CL) with varying amounts of Silt, Sand and Gravel was encountered at depths ranging from 4 to 8 feet below existing grade at the location of boring B-17.*	2 - 56

Notes: (1) SPT = Standard Penetration Test, Uncorrected N-Values in Blows-per-foot

The subsurface description is of a generalized nature provided to highlight the major soil strata encountered. The records of the subsurface exploration are included on the "Boring Logs" sheets (Appendix III) and in the "Generalized Soil Profile" (Appendix IV), which should be reviewed for specific information as to the individual borings. The stratifications shown on the records of the subsurface exploration represent the conditions only at the actual boring locations. Variations may occur and should be expected between boring locations. The stratifications represent the approximate boundary between subsurface materials and the transition may be gradual or occur between sample intervals. It is noted that the topsoil designation references the presence of surficial organic laden soil, and does not represent any particular quality specification. It is recommended that this material be tested for approval prior to use.

3.4 Groundwater Information

The groundwater level was recorded at the boring locations and as observed through the wetness of the recovered soil samples during the drilling operations. The initial groundwater table was measured to occur at depths ranging from 10 to 12 feet below the existing site grades at the boring locations. It is noted that groundwater was not encountered at the location of borings B-11, B-18 and B-19 to the depths explored. The boreholes were backfilled upon completion for safety considerations. As such, the reported groundwater levels may not be indicative of static groundwater levels.

As subsurface soils begin to dry moisture moves upwards through the soil profile by means of capillary action. Based on the subsurface soil composition (soils containing more than 30% of fines by weight), this initial groundwater reading (based on the relative wetness of the soils) could be in part attributed to the capillary action of the soils. As such, if the static groundwater elevation is critical to the design it is recommended to install temporary groundwater monitoring wells to substantiate the initial reading.

Groundwater conditions will vary with environmental variations and seasonal conditions, such as the frequency and magnitude of rainfall patterns, as well as man-made influences, such as existing swales, drainage ponds, underdrains and areas of covered soil (paved parking lots, side walks, etc.). In the project's area, seasonal groundwater fluctuations of ± 2 feet or more are common; however, greater fluctuations have been documented. We recommend that the contractor determine the actual groundwater levels at the time of the construction to determine groundwater impact on the construction procedures, if necessary.

4.0 EVALUATION AND RECOMMENDATIONS
(Control Building, B-18 & B-19 only)

Our recommendations are based on the previously discussed project information, our interpretation of the soil test borings and laboratory data, and our observations during our site reconnaissance. If the proposed construction should vary from what was described, **G E T Solutions, Inc.** requests the opportunity to review our recommendations and make any necessary changes.

4.1 Clearing and Grading

The proposed construction area should be cleared by means of removing the topsoil material, associated root mat and any other unsuitable materials. It is estimated that a cut of up to 6 inches in depth will be required to remove the topsoil and root mat material. This cut is expected to extend deeper in isolated areas to remove deeper deposits of organic soils, or unsuitable soils, which become evident during the clearing. It is recommended that the clearing operations extend laterally at least 5 feet beyond the perimeter of the proposed construction areas.

Following the initial clearing, the resulting exposed subgrade will generally be comprised of CLAY (CL) containing an appreciable amount of fines. Accordingly, combinations of excess surface moisture from precipitation ponding on the site and the construction traffic, including heavy compaction equipment, may create pumping and general deterioration of the bearing capabilities of the surface soils. Therefore, undercutting to remove loose/soft soils in isolated areas should be expected. The extent of the undercut will be determined in the field during construction based on the outcome of the field testing procedures (subgrade proofroll). In this regard, and in order to reduce undercutting, care should be exercised during the grading and construction operations at the site.

Inherently wet subgrade soils combined with potential poor site drainage make this site particularly susceptible to subgrade deterioration. Thus, grading operations at this site will be more economical if performed during the drier months of the year (historically April through November). This should minimize these potential problems, although they may not be eliminated. If grading is attempted during the winter months, undercutting of wet soils should be anticipated. However, during the drier months of the year, wet soils could be dried by disking or other drying procedures to achieve moisture contents necessary to achieve adequate degrees of compaction.

The site should be graded to enhance surface water runoff to reduce the ponding of water. Ponding of water often results in softening of the near-surface soils. In the event of heavy rainfall within areas to receive fill, we recommend that the grading operations cease until the site has had a chance to dry.

4.2 Subgrade Preparation

Following the clearing operation, the newly exposed subgrade soils should be densified with a large static drum roller. After the subgrade soils have been densified, they should be evaluated by a qualified geotechnical inspector for stability. Accordingly, the subgrade soils should be proofrolled to check for pockets of loose material hidden beneath a crust of better soil. Several passes should be made by a large rubber-tired roller or loaded dump truck over the construction areas. The number of passes will be determined in the field by the Geotechnical Engineer depending on the soils conditions. Any pumping and unstable areas observed during proofrolling (beyond the initial cut) should be undercut and/or stabilized at the directions of the Geotechnical Engineer. The project's budget should include an allowance for subgrade improvements (undercut and backfill with structural fill or aggregate base). Any areas requiring backfilling following the demolition operation should be backfilled with structural fill as described in Section 4.3 of this report. As such, the demolition and associated backfilling should be observed by a representative of **G E T Solutions, Inc.** to verify that the demolition debris is properly removed and subsequently properly backfilled.

4.3 Structural Fill and Placement

Following the approval of the natural subgrade soils by the Geotechnical Engineer, the placement of the fill required to establish the design grades may begin. Any material to be used for structural fill should be evaluated and tested by **G E T Solutions, Inc.** prior to placement to determine if they are suitable for the intended use. Suitable structural fill material should consist of sand or gravel containing less than 25% by weight of fines (SP, SM, SW, GP, GW), having a liquid limit less than 20 and plastic limit less than 6, and should be free of rubble, organics, clay, debris and other unsuitable material.

All structural fill should be compacted to a dry density of at least 95 percent of the Standard Proctor maximum dry density (ASTM D698). In general, the compaction should be accomplished by placing the fill in maximum 10-inch loose lifts and mechanically compacting each lift to at least the specified minimum dry density. A representative of **G E T Solutions, Inc.** should perform field density tests on each lift as necessary to assure that adequate compaction is achieved.

Backfill material in utility trenches within the construction areas should consist of structural fill (as previously described), and should be compacted to at least 95 percent of ASTM D698. This fill should be placed in 4 to 6 inch loose lifts when hand compaction equipment is used.

Care should be used when operating the compactors near existing structures to avoid transmission of the vibrations that could cause settlement damage or disturb occupants. In this regard, it is recommended that the vibratory roller remain at least 25 feet away from existing structures; these areas should be compacted with small, hand-operated compaction equipment.

4.4 Suitability of On-site Soils

Based on the laboratory testing program and visual classifications, the shallow CLAY (CL) soils encountered at the boring locations, do not appear to meet the criteria recommended in this report (Section 4.3) for reuse as structural fill. The shallow subsurface SAND (SM, SP) soils encountered at the boring locations do appear suitable for reuse as structural fill; however, significant segregation and moisture manipulation may be required as these soils are located near or below the groundwater table. This manipulation will likely require stockpiling of wet soils and/or placing the material in thin layers, which could slow down the utility backfill procedures. As such, it may be necessary to import structural fill to expedite the utility backfilling. Further classification testing (natural moisture content, gradation analysis, and Proctor testing) should be performed in the field during construction to evaluate the suitability of excavated soils for reuse as backfill within the construction areas.

4.5 Foundation Design Recommendations

Provided that the construction procedures are properly performed, the proposed structure can be supported by shallow foundations bearing upon firm natural soil or well compacted structural fill material. Depending on the outcome of the field testing procedures, some foundation undercut may be required (please see Section 4.7 for further information concerning the foundation undercut). The footings can be designed using a net allowable soil pressure of 2,000 pounds per square foot (psf). In using net pressures, the weight of the footings and backfill over the footings, including the weight of the floor slab, need not be considered. Hence, only loads applied at or above the finished floor need to be used for dimensioning the footings.

In order to develop the recommended bearing capacity of 2,000 pounds per square foot (psf), the base of the footings should have an embedment of at least 30 inches beneath finished grades and wall footings should have a minimum width of 24 inches. In addition, isolated square column footings are recommended to be a minimum of 3 feet by 3 feet in area for bearing capacity consideration. The recommended 30-inch footing embedment is considered sufficient to provide adequate cover against frost penetration to the bearing soils.

4.6 Settlements

It is estimated that, with proper site preparation, the maximum resulting total settlement of the proposed building foundations should be up to 1 inch. The maximum differential settlement magnitude is expected to be less than ½-inch between adjacent footings (wall footings of widely varying loading conditions). The settlements were estimated on the basis of the results of the field penetration tests. Careful field control will contribute substantially towards minimizing the settlements.

4.7 Foundation Excavations

In preparation for shallow foundation support, the footing excavations should extend into firm natural soil or well compacted structural fill. All foundation excavations should be observed by a Geotechnical Engineer. At that time, the Geotechnical Engineer should also explore the extent of excessively loose, soft, or otherwise unsuitable material within the exposed excavations. Also, at the time of the footing observations, the Geotechnical Engineer will advance hand auger borings in the bases of the foundation excavations. The necessary depth of penetration will be established during the subgrade observations.

If pockets of unstable or unsuitable soils requiring undercut are encountered in the footing excavations, the proposed footing elevation should be re-established by means of backfilling with “flowable fill”, open graded stone/gravel or a suitable structural fill material compacted to a dry density of at least 98% of the Standard Proctor maximum dry density (ASTM Specification D 698), as described in Section 4.3 of this report, prior to concrete placement. This construction procedure will provide for a net allowable bearing capacity of 2,000 psf.

Immediately prior to reinforcement placement, it is suggested that the bearing surfaces of all foundations be compacted using hand operated mechanical tampers. In this manner, any localized areas, which have been loosened by excavation operations, should be adequately re-compacted. The compaction testing in the base of the foundation may be waived by the inspector, where firm bearing soils are observed during the foundation inspections.

Soils exposed in the bases of all satisfactory foundation excavations should be protected against any detrimental change in condition, such as physical disturbance, rain or frost. Surface run-off water should be drained away from the excavations and not be allowed to pond. If possible, all footing concrete should be placed the same day the excavation is made. If this is not possible, the footing excavations should be adequately protected.

4.8 Slab-on-Grade Design

The floor slab may be constructed as a slab-on-grade member provided the previously recommended earthwork activities and evaluations are carried out properly. It is recommended that all ground floor slabs be directly supported by at least a 4-inch layer of relatively clean, compacted, poorly graded sand (SP) or gravel (GP) with less than 5% passing the No. 200 Sieve (0.074 mm). The purpose of the 4-inch layer is to act as a capillary barrier and equalize moisture conditions beneath the slab. A subgrade modulus of at least 125 psi/in may be assumed for the slab subgrade soils.

It is recommended that all ground floor slabs be "floating". That is, generally ground supported and not rigidly connected to walls or foundations. This is to minimize the possibility of cracking and displacement of the floor slabs because of differential movements between the slab and the foundation.

It is also recommended that the floor slab bearing soils be covered by a vapor barrier or retarder in order to minimize the potential for floor dampness, which can affect the performance of glued tile and carpet. Generally, use a vapor retarder for minimal vapor resistance protection below the slab on grade. When floor finishes, site conditions or other considerations require greater vapor resistance protection; consideration should be given to using a vapor barrier. Selection of a vapor retarder or barrier should be made by the architect based on project requirements.

4.9 Seismic Evaluation

On the basis of the results of the soil test borings drilled at this site (17 feet maximum explored depth) and our experience in the project area, it is our opinion that this site should be considered a Site Class "D" in accordance with Table 20.3-1 Site Classification of the ASCE 7-10 Minimum Design Loads for Buildings and Other Structures, Chapter 20 (referenced in the 2012 IBC). However, the seismic evaluation requires soils information associated with the upper 100 feet. If the site classification is critical to the structural design it will be necessary to perform a 100-foot deep CPT boring with shear wave velocity testing to substantiate the site classification.

5.0 CONSTRUCTION CONSIDERATIONS

5.1 Drainage and Groundwater Concerns

It is expected that dewatering will be required for excavations that extend near or below the existing groundwater table. Dewatering above the groundwater level could probably be accomplished by pumping from sumps. Dewatering at depths below the groundwater level may require well pointing.

It would be advantageous to construct all fills early in the construction. If this is not accomplished, disturbance of the existing site drainage could result in collection of surface water in some areas, thus rendering these areas wet and very loose. Temporary drainage ditches should be employed by the contractor to accentuate drainage during construction. If water collects in foundation excavations, it will be necessary to remove the water from the excavation, remove the saturated soils, and re-test the adequacy of the bearing surface soils to support the design bearing pressure prior to concrete placement.

Establishing a system of drainage ditches to carry surface and shallow groundwater away from the constructions areas should reduce grading costs. No permanent subsurface drainage systems are needed for this project.

5.2 Site Utility Installation

The base of the utility trenches should be observed by a qualified geotechnical inspector prior to the pipe and structure placement to verify the suitability of the bearing soils. Utilities and structures located beneath the groundwater elevation will bear in wet granular/cohesive soils. In these instances the bearing soils may require some stabilization to provide suitable bedding. This stabilization is typically accomplished by providing additional bedding materials (open graded stone/gravel). In addition depending on the depth of the utility trench excavation, some means of dewatering may be required to facilitate the utility installation and associated backfilling.

The resulting excavations should be backfilled with structural fill, as described in Section 4.3 of this report.

5.3 Excavations

In Federal Register, Volume 54, No. 209 (October, 1989), the United States Department of Labor, Occupational Safety and Health Administration (OSHA) amended its "Construction Standards for Excavations, 29 CFR, part 1926, Subpart P". This document was issued to better insure the safety of workmen entering trenches or excavations. It is mandated by this federal regulation that all excavations, whether they be utility trenches, basement excavation or footing excavations, be constructed in accordance with the new (OSHA) guidelines. It is our understanding that these regulations are being strictly enforced and if they are not closely followed, the owner and the contractor could be liable for substantial penalties.

The contractor is solely responsible for designing and constructing stable, temporary excavations and should shore, slope, or bench the sides of the excavations as required to maintain stability of both the excavation sides and bottom. The contractor's responsible person, as defined in 29 CFR Part 1926, should evaluate the soil exposed in the excavations as part of the contractor's safety procedures. In no case should slope height, slope inclination, or excavation depth, including utility trench excavation depth, exceed those specified in local, state, and federal safety regulations.

We are providing this information solely as a service to our client. **G E T Solutions, Inc.** is not assuming responsibility for construction site safety or the contractor's activities; such responsibility is not being implied and should not be inferred.

6.0 REPORT LIMITATIONS

The recommendations submitted are based on the available soil information obtained by **G E T Solutions, Inc.** and the information supplied by the client and their consultants for the proposed project. If there are any revisions to the plans for this project or if deviations from the subsurface conditions noted in this report are encountered during construction, **G E T Solutions, Inc.** should be notified immediately to determine if changes in the foundation recommendations are required. If **G E T Solutions, Inc.** is not retained to perform these functions, **G E T Solutions, Inc.** can not be responsible for the impact of those conditions on the geotechnical recommendations for the project.

The Geotechnical Engineer warrants that the findings, recommendations, specifications or professional advice contained herein have been made in accordance with generally accepted professional geotechnical engineering practices in the local area. No other warranties are implied or expressed.

After the plans and specifications are more complete the Geotechnical Engineer should be provided the opportunity to review the final design plans and specifications to assure our engineering recommendations have been properly incorporated into the design documents, in order that the earthwork and foundation recommendations may be properly interpreted and implemented. At that time, it may be necessary to submit supplementary recommendations. This report has been prepared for the exclusive use of JMT, Inc and their consultants for the specific application to the Naval Air Station Patuxent River - Repair Runways 14-32 & 6-24 project located in Patuxent River, Maryland.

APPENDICES

I. BORING LOCATION PLAN

II. SOIL CLASSIFICATION SYSTEM

III. BORING LOGS

IV. GENERALIZED SOIL PROFILE

V. PAVEMENT SECTION COMPOSITION AND DESCRIPTION

APPENDIX I

BORING LOCATION PLAN

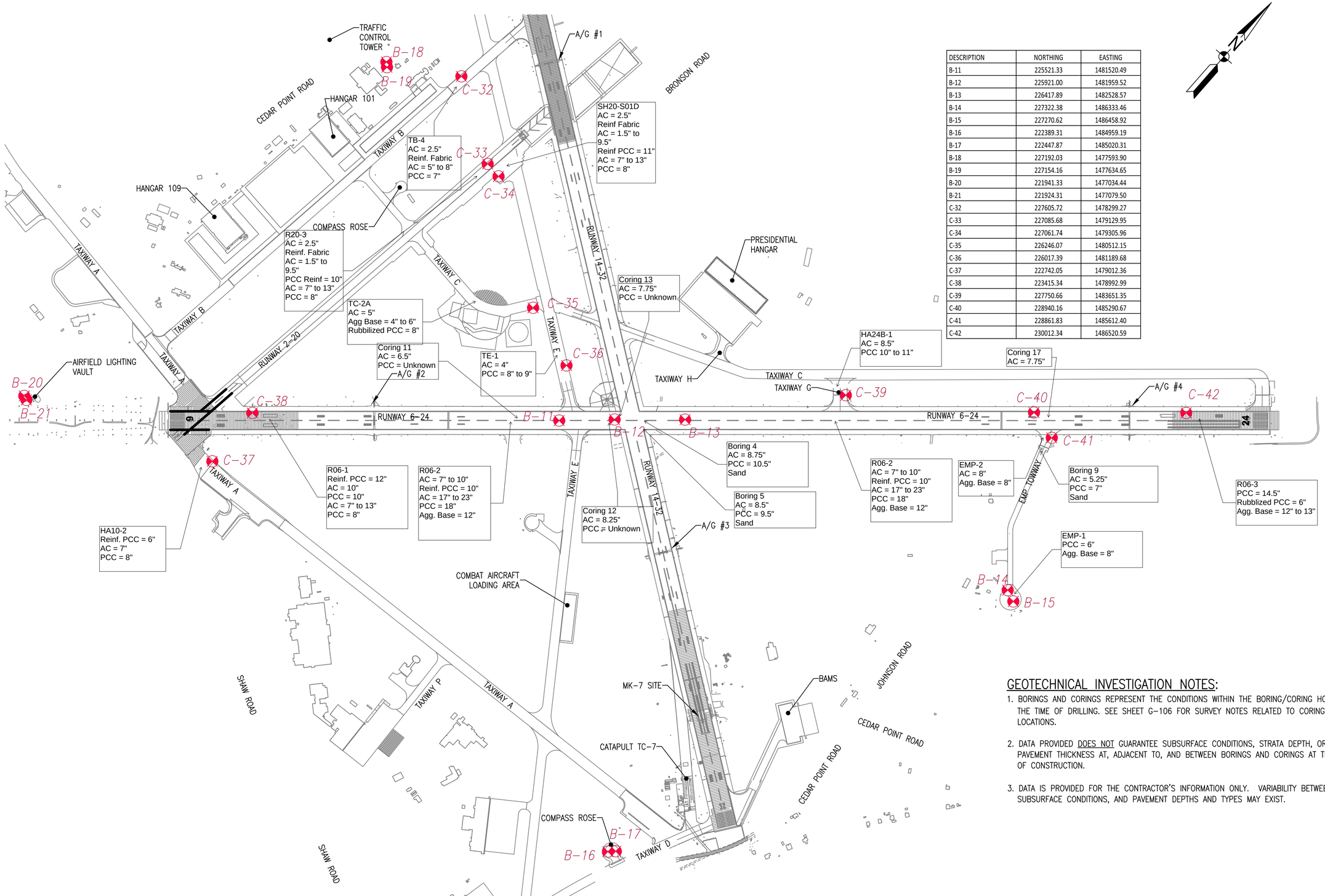

DESCRIPTION	NORTHING	EASTING
B-11	225521.33	1481520.49
B-12	225921.00	1481959.52
B-13	226417.89	1482528.57
B-14	227322.38	1486333.46
B-15	227270.62	1486458.92
B-16	222389.31	1484959.19
B-17	222447.87	1485020.31
B-18	227192.03	1477593.90
B-19	227154.16	1477634.65
B-20	221941.33	1477034.44
B-21	221924.31	1477079.50
C-32	227605.72	1478299.27
C-33	227085.68	1479129.95
C-34	227061.74	1479305.96
C-35	226246.07	1480512.15
C-36	226017.39	1481189.68
C-37	222742.05	1479012.36
C-38	223415.34	1478992.99
C-39	227750.66	1483651.35
C-40	228940.16	1485290.67
C-41	228861.83	1485612.40
C-42	230012.34	1486520.59

GEOTECHNICAL INVESTIGATION NOTES:

1. BORINGS AND CORINGS REPRESENT THE CONDITIONS WITHIN THE BORING/CORING HOLE AT THE TIME OF DRILLING. SEE SHEET G-106 FOR SURVEY NOTES RELATED TO CORING/BORING LOCATIONS.
2. DATA PROVIDED DOES NOT GUARANTEE SUBSURFACE CONDITIONS, STRATA DEPTH, OR PAVEMENT THICKNESS AT, ADJACENT TO, AND BETWEEN BORINGS AND CORINGS AT THE TIME OF CONSTRUCTION.
3. DATA IS PROVIDED FOR THE CONTRACTOR'S INFORMATION ONLY. VARIABILITY BETWEEN SUBSURFACE CONDITIONS, AND PAVEMENT DEPTHS AND TYPES MAY EXIST.

CORING AND BORING LOCATION PLAN

1" = 500'

SYM | DESCRIPTION | DATE | APPR

NAVFAC

PRELIMINARY NOT FOR CONSTRUCTION

SEAL

JOHNSON, MIRMIRAN & THOMPSON
Gannett Fleming
A Joint Venture
272 Benefit Blvd, Suite 260
Virginia Beach, Virginia, 23452
Telephone: (757) 499-1895
Website: www.jmt.com

A/E INFO

APPROVED

FOR COMMANDER NAVFAC

ACTIVITY

JAMES FLETCHER PER CHECKLIST

SATISFACTORY TO DATE

DES: VALUE DRWN VALUE CHK VALUE

PM/DM JE/KHB

BRANCH MANAGER

CHIEF ENG/ARCH E. GALLAHER, PE

DEPARTMENT OF THE NAVY
NAVAL FACILITIES ENGINEERING COMMAND
WASHINGTON, D.C.
NAVFAC WASHINGTON
NAVAL AIR STATION PATUXENT RIVER
PATUXENT RIVER, MARYLAND
FT BLUE

FY16 SPECIAL PROJECT RM12-2137
REPAIR RUNWAYS 14-32 & 6-24 - PHASE 2

GEOTECHNICAL INVESTIGATION LOCATION PLAN

SCALE: AS NOTED

EPROJECT NO.: •

CONSTR. CONTR. NO. •

NAVFAC DRAWING NO. 14

SHEET 14 OF •

B-001

DRAWFORM REVISION: 10 MARCH 2009

FILE NAME: G:\PHPA\100863_009_FY16_Repair_Runways_\Working Data\10-0863-009-B-001_093015.dwg LAYOUT NAME: GEOTECHNICAL INVESTIGATION LOCATION PLAN PLOTTED: Friday, October 02, 2015 - 11:46am USER: mcosenza

APPENDIX II

SOIL CLASSIFICATION SYSTEM

GET Solutions, Inc.
Geotechnical • Environmental • Testing

Virginia Beach
204 Grayson Road
Virginia Beach, VA 23462
(757) 518-1703

Williamsburg
1592 Penniman Rd. Suite E
Williamsburg, Virginia 23185
(757) 564-6452

Elizabeth City
504 East Elizabeth St. Suite 2
Elizabeth City, NC 27909
(252) 335-9765

CLASSIFICATION SYSTEM FOR SOIL EXPLORATION

Standard Penetration Test (SPT), N-value

Standard Penetration Tests (SPT) were performed in the field in general accordance with ASTM D 1586. The soil samples were obtained with a standard 1.4" I.D., 2" O.D., 30" long split-spoon sampler. The sampler was driven with blows of a 140 lb. hammer falling 30 inches. The number of blows required to drive the sampler each 6-inch increment (4 increments for each soil sample) of penetration was recorded and is shown on the boring logs. The sum of the second and third penetration increments is termed the SPT N-value.

NON COHESIVE SOILS

(SILT, SAND, GRAVEL and Combinations)

Relative Density

Very Loose	4 blows/ft. or less
Loose	5 to 10 blows/ft.
Medium Dense	11 to 30 blows/ft.
Dense	31 to 50 blows/ft.
Very Dense	51 blows/ft. or more

COHESIVE SOILS

(CLAY, SILT and Combinations)

Consistency

Very Soft	2 blows/ft. or less
Soft	3 to 4 blows/ft.
Medium Stiff	5 to 8 blows/ft.
Stiff	9 to 15 blows/ft.
Very Stiff	16 to 30 blows/ft.
Hard	31 blows/ft. or more

Particle Size Identification

Boulders	8 inch diameter or more	
Cobbles	3 to 8 inch diameter	
Gravel	Coarse	1 to 3 inch diameter
	Medium	$^1/_2$ to 1 inch diameter
	Fine	$^1/_4$ to $^1/_2$ inch diameter
Sand	Coarse	2.00 mm to $^1/_4$ inch (diameter of pencil lead)
	Medium	0.42 to 2.00 mm (diameter of broom straw)
	Fine	0.074 to 0.42 mm (diameter of human hair)
Silt		0.002 to 0.074 mm (cannot see particles)

Relative Proportions

Descriptive Term	Percent
Trace	0-5
Few	5-10
Little	15-25
Some	30-45
Mostly	50-100

Strata Changes

In the column "Description" on the boring log, the horizontal lines represent approximate strata changes.

Groundwater Readings

Groundwater conditions will vary with environmental variations and seasonal conditions, such as the frequency and magnitude of rainfall patterns, as well as tidal influences and man-made influences, such as existing swales, drainage ponds, underdrains and areas of covered soil (paved parking lots, side walks, etc.).

CLASSIFICATION SYMBOLS (ASTM D 2487 and D 2488)

Coarse Grained Soils

More than 50% retained on No. 200 sieve

GW - Well-graded Gravel
GP - Poorly graded Gravel
GW-GM - Well-graded Gravel w/Silt
GW-GC - Well-graded Gravel w/Clay
GP-GM - Poorly graded Gravel w/Silt
GP-GC - Poorly graded Gravel w/Clay
GM - Silty Gravel
GC - Clayey Gravel
GC-GM - Silty, Clayey Gravel
SW - Well-graded Sand
SP - Poorly graded Sand
SW-SM - Well-graded Sand w/Silt
SW-SC - Well-graded Sand w/Clay
SP-SM - Poorly graded Sand w/Silt
SP-SC - Poorly graded Sand w/Clay
SM - Silty Sand
SC - Clayey Sand
SC-SM - Silty, Clayey Sand

Fine-Grained Soils

50% or more passes the No. 200 sieve

CL - Lean Clay
CL-ML - Silty Clay
ML - Silt
OL - Organic Clay/Silt
Liquid Limit 50% or greater
CH - Fat Clay
MH - Elastic Silt
OH - Organic Clay/Silt

Highly Organic Soils

PT - Peat

Depending on percentage of fines (fraction smaller than No. 200 sieve size), coarse-grained soils are classified as follows:

Less than 5 percent	GW, GP, SW,SP
More than 12 percent	GM, GC, SM, SC
5 to 12 percent	Borderline cases requiring dual symbols

Plasticity Chart

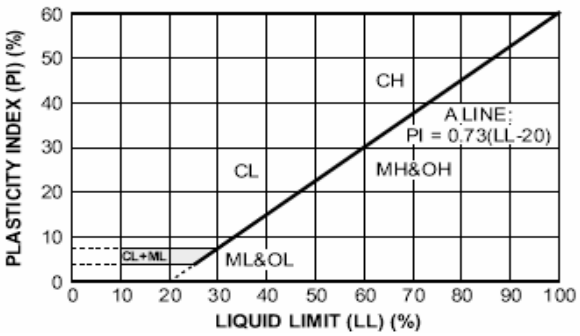

APPENDIX III

BORING LOGS

RECORD OF SUBSURFACE EXPLORATION

GET Solutions, Inc.
Geotechnical • Environmental • Testing

Virginia Beach
204 Grayson Road
Virginia Beach, VA 23642
757-518-1703

Williamsburg
1592-E Penniman Road
Williamsburg, VA 23185
757-564-6452

Elizabeth City
106 Capital Trace Unit E
Elizabeth City, NC 27909
252-335-9765

Jacksonville
415-A Western Blvd
Jacksonville, NC 28546
910-478-9915

BORING ID B-11

PROJECT NAME: **Naval Air Station Patuxent River Repair Runways 14-32 & 6-24**
PROJECT NUMBER: **WM14-180G**
CLIENT: **Johnson, Mirmiran & Thompson, Inc.**
SURFACE ELEVATION (MSL) (ft):
PROJECT LOCATION: **Patuxent River, MD**
LOGGED BY:
BORING LOCATION: **See Attached Boring Location Plan**
DATE STARTED: **10/23/2015**
DRILLING METHOD(S): **Rotary wash "mud"**
DATE COMPLETED: **10/23/2015**
GROUNDWATER*: INITIAL (ft) ▽: ___ AFTER ___ HOURS (ft) ▼: ___ CAVE-IN (ft) ◌: ___
DRILLER: **GET Solutions, Inc.**

The initial groundwater readings are not intended to indicate the static groundwater level.

Elevation (ft)	Depth (ft)	STRATA DESCRIPTION	Strata Legend	Sample ID	Sample Type	Sample Recovery (in.)	Blow Counts (N-Values)	%<#200	TEST RESULTS (Plastic Limit X——X Liquid Limit; Water Content - ●; Penetration - ▨; 10 20 30 40 50 60 70)
		12-in. Asphalt (1.0)		1					
		10-in. Concrete (1.8)							
		Brown, moist, lean CLAY (CL) with varying amounts of fine Sand, stiff to very stiff		2	SS	17	6-8-10-8 (18)		
	5			3	SS	14	2-4-7-8 (11)		
		Brown, moist, Silty fine to medium SAND (SM), medium dense (6.0)		4	SS	24	7-6-7-7 (13)		
		Tan/gray, moist, poorly graded fine to coarse SAND (SP) with trace fine Gravel, medium dense (8.0)		5	SS	17	6-6-7-13 (13)	2	
	10			6	SS	24	6-12-17-20 (29)		
		Boring terminated at 12 feet below existing grade. (12.0)							

Sample Type(s):
- CORE - Core Sample
- SS - Split Spoon

Notes:

This information pertains only to this boring and should not be interpreted as being indicitive of the site.

RECORD OF SUBSURFACE EXPLORATION

GET Solutions, Inc.
Geotechnical • Environmental • Testing

Virginia Beach
204 Grayson Road
Virginia Beach, VA 23642
757-518-1703

Williamsburg
1592-E Penniman Road
Williamsburg, VA 23185
757-564-6452

Elizabeth City
106 Capital Trace Unit E
Elizabeth City, NC 27909
252-335-9765

Jacksonville
415-A Western Blvd
Jacksonville, NC 28546
910-478-9915

BORING ID B-12

PROJECT NAME: **Naval Air Station Patuxent River Repair Runways 14-32 & 6-24**
PROJECT NUMBER: **WM14-180G**
CLIENT: **Johnson, Mirmiran & Thompson, Inc.**
SURFACE ELEVATION (MSL) (ft):
PROJECT LOCATION: **Patuxent River, MD**
LOGGED BY:
BORING LOCATION: **See Attached Boring Location Plan**
DATE STARTED: **10/23/2015**
DRILLING METHOD(S): **Rotary wash "mud"**
DATE COMPLETED: **10/23/2015**
GROUNDWATER*: INITIAL (ft) ▽: **12** AFTER ___ HOURS (ft) ▼: ___ CAVE-IN (ft) ◌: ___
DRILLER: **GET Solutions, Inc.**

The initial groundwater readings are not intended to indicate the static groundwater level.

Elevation (ft)	Depth (ft)	STRATA DESCRIPTION	Strata Legend	Sample ID	Sample Type	Sample Recovery (in.)	Blow Counts (N-Values)	%<#200	TEST RESULTS (Plastic Limit ×——× Liquid Limit; Water Content - ●; Penetration - ▨; 10 20 30 40 50 60 70)
		9.25-in. Asphalt (0.8)							
		9.75-in. Concrete (1.6)		1					
		Mottled orange/gray, moist, lean CLAY (CL) with varying amounts of fine Sand, stiff		2	X	16	5-6-5-11 (11)		
	5			3	X	24	9-7-5-9 (12)	73	
		Brown, moist, Silty fine to medium SAND (SM), medium dense (6.0)		4	X	20	7-5-7-5 (12)		
		Tan/gray, moist, poorly graded fine to coarse SAND (SP), medium dense (8.0)		5	X	20	5-6-7-11 (13)		
	10	Wet below 12-ft.		6	X	22	9-8-10-12 (18)		
▽		(12.0)							
		Boring terminated at 12 feet below existing grade.							

Sample Type(s):
- CORE - Core Sample
- SS - Split Spoon

Notes:

This information pertains only to this boring and should not be interpreted as being indicitive of the site.

RECORD OF SUBSURFACE EXPLORATION

GET Solutions, Inc.
Geotechnical • Environmental • Testing

Virginia Beach
204 Grayson Road
Virginia Beach, VA 23642
757-518-1703

Williamsburg
1592-E Penniman Road
Williamsburg, VA 23185
757-564-6452

Elizabeth City
106 Capital Trace Unit E
Elizabeth City, NC 27909
252-335-9765

Jacksonville
415-A Western Blvd
Jacksonville, NC 28546
910-478-9915

BORING ID B-13

PROJECT NAME: **Naval Air Station Patuxent River Repair Runways 14-32 & 6-24**
PROJECT NUMBER: **WM14-180G**
CLIENT: **Johnson, Mirmiran & Thompson, Inc.**
SURFACE ELEVATION (MSL) (ft):
PROJECT LOCATION: **Patuxent River, MD**
LOGGED BY:
BORING LOCATION: **See Attached Boring Location Plan**
DATE STARTED: **10/23/2015**
DRILLING METHOD(S): **Rotary wash "mud"**
DATE COMPLETED: **10/23/2015**
GROUNDWATER*: INITIAL (ft) ▽: **11.5** AFTER ___ HOURS (ft) ▼: ___ CAVE-IN (ft) ○: ___
DRILLER: **GET Solutions, Inc.**

The initial groundwater readings are not intended to indicate the static groundwater level.

Elevation (ft)	Depth (ft)	STRATA DESCRIPTION	Strata Legend	Sample ID	Sample Type	Sample Recovery (in.)	Blow Counts (N-Values)	%<#200	TEST RESULTS (Plastic Limit X——X Liquid Limit; Water Content - ●; Penetration - ▨; 10 20 30 40 50 60 70)
	0.7	7.75-in. Asphalt							
		Brown, moist, Clayey fine to medium SAND (SC), medium dense		1					
				2	X	20	4-6-9-11 (15)		
	4.0								
		Brown, moist, Silty fine to medium SAND (SM), medium dense		3	X	24	6-6-7-9 (13)		
	5			4	X	24	6-7-9-12 (16)		
	8.0								
		Tan/gray, moist to wet, poorly graded fine to coarse SAND (SP) with trace fine Gravel, medium dense		5	X	24	6-9-12-15 (21)		
	10			6	X	24	9-10-11-11 (21)		
▽	12.0	Wet below 11.5-ft.							
		Boring terminated at 12 feet below existing grade.							

Sample Type(s):
- [ ] CORE - Core Sample
- [X] SS - Split Spoon

Notes:

This information pertains only to this boring and should not be interpreted as being indicitive of the site.

RECORD OF SUBSURFACE EXPLORATION

GET Solutions, Inc.
Geotechnical • Environmental • Testing

Virginia Beach
204 Grayson Road
Virginia Beach, VA 23642
757-518-1703

Williamsburg
1592-E Penniman Road
Williamsburg, VA 23185
757-564-6452

Elizabeth City
106 Capital Trace Unit E
Elizabeth City, NC 27909
252-335-9765

Jacksonville
415-A Western Blvd
Jacksonville, NC 28546
910-478-9915

BORING ID B-14

PROJECT NAME: **Naval Air Station Patuxent River Repair Runways 14-32 & 6-24**
PROJECT NUMBER: **WM14-180G**
CLIENT: **Johnson, Mirmiran & Thompson, Inc.**
SURFACE ELEVATION (MSL) (ft):
PROJECT LOCATION: **Patuxent River, MD**
LOGGED BY:
BORING LOCATION: **See Attached Boring Location Plan**
DATE STARTED: **10/23/2015**
DRILLING METHOD(S): **Rotary wash "mud"**
DATE COMPLETED: **10/23/2015**
GROUNDWATER*: INITIAL (ft) ▽: **12** AFTER ___ HOURS (ft) ▼: ___ CAVE-IN (ft) ◌: ___
DRILLER: **GET Solutions, Inc.**

The initial groundwater readings are not intended to indicate the static groundwater level.

Elevation (ft)	Depth (ft)	STRATA DESCRIPTION	Sample ID	Sample Type	Sample Recovery (in.)	Blow Counts (N-Values)	%<#200
		12-in. Concrete					
	1.0	Brown, moist, lean CLAY (CL) with trace fine Sand, stiff	1				
			2	SS	17	2-4-5-7 (9)	
	4.0	Brown, moist, Silty fine to medium SAND (SM), very loos to loose	3	SS	24	2-3-3-3 (6)	
	5		4	SS	16	1-2-2-4 (4)	20
	8.0	Gray, moist, poorly graded fine to medium SAND (SP), medium dense	5	SS	14	5-6-11-11 (17)	
	10	10.0 Mottled orange/gray, moist to wet, Silty fine to medium SAND (SM), loose to medium dense	6	SS	20	6-10-12-14 (22)	
▽		Wet below 12-ft.					
			7	SS	24	3-4-5-5 (9)	
	15	15.0 Gray, wet, poorly graded fine to coarse SAND (SP), loose	8	SS	24	3-3-5-6 (8)	
	17.0	Boring terminated at 17 feet below existing grade.					

TEST RESULTS

Plastic Limit X——X Liquid Limit
Water Content - ●
Penetration - ▨

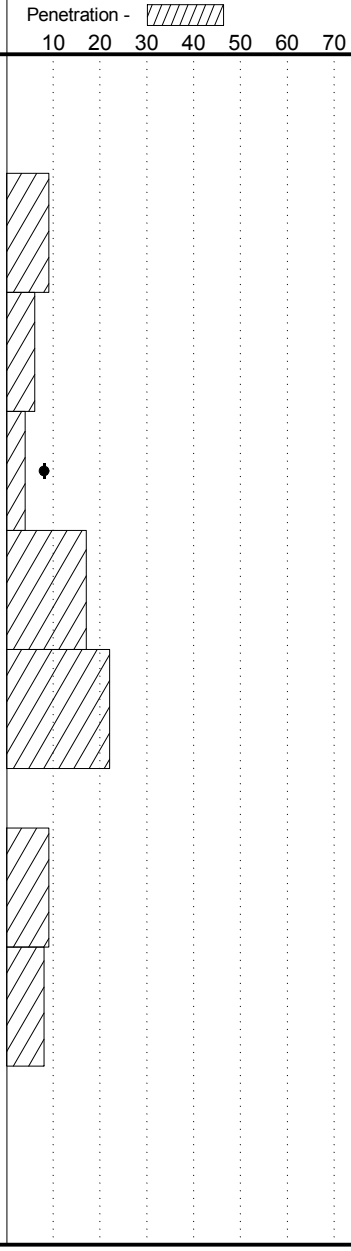

Sample Type(s):
☐ CORE - Core Sample
☒ SS - Split Spoon

Notes:

This information pertains only to this boring and should not be interpreted as being indicitive of the site.

RECORD OF SUBSURFACE EXPLORATION

GET Solutions, Inc.
Geotechnical • Environmental • Testing

Virginia Beach
204 Grayson Road
Virginia Beach, VA 23642
757-518-1703

Williamsburg
1592-E Penniman Road
Williamsburg, VA 23185
757-564-6452

Elizabeth City
106 Capital Trace Unit E
Elizabeth City, NC 27909
252-335-9765

Jacksonville
415-A Western Blvd
Jacksonville, NC 28546
910-478-9915

BORING ID B-15

PROJECT NAME: **Naval Air Station Patuxent River Repair Runways 14-32 & 6-24**
PROJECT NUMBER: **WM14-180G**
CLIENT: **Johnson, Mirmiran & Thompson, Inc.**
SURFACE ELEVATION (MSL) (ft):
PROJECT LOCATION: **Patuxent River, MD**
LOGGED BY:
BORING LOCATION: **See Attached Boring Location Plan**
DATE STARTED: **10/23/2015**
DRILLING METHOD(S): **Rotary wash "mud"**
DATE COMPLETED: **10/23/2015**
GROUNDWATER*: INITIAL (ft) ▽: **12** AFTER ___ HOURS (ft) ▼: ___ CAVE-IN (ft) ◌: ___
DRILLER: **GET Solutions, Inc.**

The initial groundwater readings are not intended to indicate the static groundwater level.

Elevation (ft)	Depth (ft)	STRATA DESCRIPTION	Sample ID	Sample Type	Sample Recovery (in.)	Blow Counts (N-Values)	%<#200
		14.5-in. Concrete	1				
	1.2	Brown, moist, lean CLAY (CL) with varying amounts of fine Sand, medium stiff to stiff	2	X	16	3-4-5-6 (9)	
	5		3	X	24	3-4-4-6 (8)	
	6.0	Brown, moist, Silty fine to medium SAND (SM), loose	4	X	24	4-3-3-4 (6)	
	8.0	Gray, moist, poorly graded fine to coarse SAND (SP), loose to medium dense	5	X	13	3-4-8-9 (12)	
	10		6	X	14	7-7-6-5 (13)	
▽		Wet below 12-ft.					
			7	X	24	3-4-4-6 (8)	
	15	15.0 Boring terminated at 15 feet below existing grade.					

TEST RESULTS
Plastic Limit X——X Liquid Limit
Water Content - ●
Penetration - ▨
10 20 30 40 50 60 70

Sample Type(s):
CORE - Core Sample
SS - Split Spoon

Notes:

This information pertains only to this boring and should not be interpreted as being indicitive of the site.

RECORD OF SUBSURFACE EXPLORATION

GET Solutions, Inc.
Geotechnical • Environmental • Testing

Virginia Beach
204 Grayson Road
Virginia Beach, VA 23642
757-518-1703

Williamsburg
1592-E Penniman Road
Williamsburg, VA 23185
757-564-6452

Elizabeth City
106 Capital Trace Unit E
Elizabeth City, NC 27909
252-335-9765

Jacksonville
415-A Western Blvd
Jacksonville, NC 28546
910-478-9915

BORING ID B-16

PROJECT NAME: Naval Air Station Patuxent River Repair Runways 14-32 & 6-24
PROJECT NUMBER: WM14-180G
CLIENT: Johnson, Mirmiran & Thompson, Inc.
SURFACE ELEVATION (MSL) (ft):
PROJECT LOCATION: Patuxent River, MD
LOGGED BY:
BORING LOCATION: See Attached Boring Location Plan
DATE STARTED: 10/23/2015
DRILLING METHOD(S): Rotary wash "mud"
DATE COMPLETED: 10/23/2015
GROUNDWATER*: INITIAL (ft) ▽: 10 AFTER ___ HOURS (ft) ▼: ___ CAVE-IN (ft) ◌: ___
DRILLER: GET Solutions, Inc.

The initial groundwater readings are not intended to indicate the static groundwater level.

Elevation (ft)	Depth (ft)	STRATA DESCRIPTION	Sample ID	Sample Type	Sample Recovery (in.)	Blow Counts (N-Values)	%<#200
	0.7	8-in. Concrete					
		Gray, moist to wet, lean CLAY (CL) with trace fine Sand, soft	1	SS	11	2-2-3 (4)	
	2.0	Gray, moist, poorly graded fine to coarse SAND (SP) with fine to medium Gravel, medium dense to very dense	2	SS	24	4-7-10-30 (17)	
	5		3	SS	20	13-27-29-26 (56)	
			4	SS	20	14-21-18-22 (39)	
	8.0	Brown, moist, Silty fine to medium SAND (SM), medium dense	5	SS	16	6-7-13-14 (20)	
▽	10 / 10.0	Mottled orange/gray, wet, poorly graded fine to medium SAND (SP), medium dense Wet below 10-ft.	6	SS	16	4-7-12-13 (19)	3
			7	SS	12	6-11-16-20 (27)	
	15 / 15.0	Boring terminated at 15 feet below existing grade.					

TEST RESULTS

Plastic Limit X——X Liquid Limit
Water Content - ●
Penetration - ▨

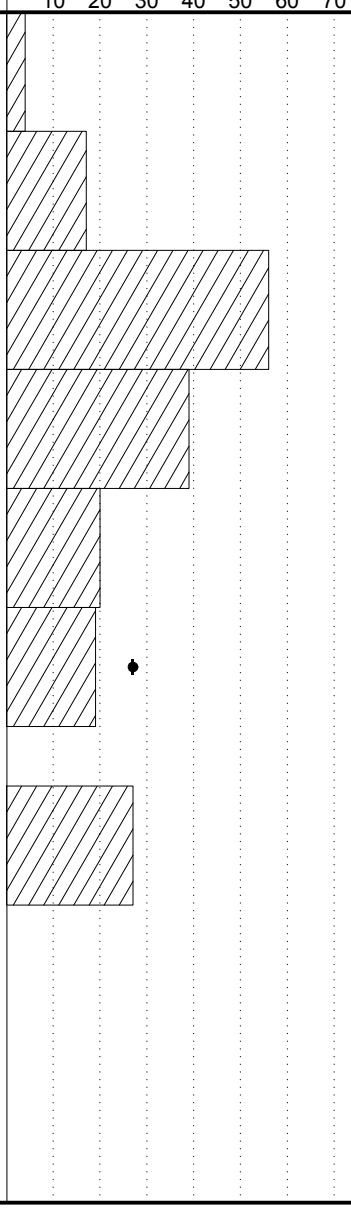

Sample Type(s):

SS - Split Spoon

Notes:

This information pertains only to this boring and should not be interpreted as being indicitive of the site.

RECORD OF SUBSURFACE EXPLORATION

GET Solutions, Inc.
Geotechnical • Environmental • Testing

Virginia Beach
204 Grayson Road
Virginia Beach, VA 23642
757-518-1703

Williamsburg
1592-E Penniman Road
Williamsburg, VA 23185
757-564-6452

Elizabeth City
106 Capital Trace Unit E
Elizabeth City, NC 27909
252-335-9765

Jacksonville
415-A Western Blvd
Jacksonville, NC 28546
910-478-9915

BORING ID B-17

PROJECT NAME: Naval Air Station Patuxent River Repair Runways 14-32 & 6-24
PROJECT NUMBER: WM14-180G
CLIENT: Johnson, Mirmiran & Thompson, Inc.
SURFACE ELEVATION (MSL) (ft):
PROJECT LOCATION: Patuxent River, MD
LOGGED BY:
BORING LOCATION: See Attached Boring Location Plan
DATE STARTED: 10/23/2015
DRILLING METHOD(S): Rotary wash "mud"
DATE COMPLETED: 10/23/2015
GROUNDWATER*: INITIAL (ft) ▽: 10 AFTER ___ HOURS (ft) ▼: ___ CAVE-IN (ft) ◌: ___
DRILLER: GET Solutions, Inc.

The initial groundwater readings are not intended to indicate the static groundwater level.

Elevation (ft)	Depth (ft)	STRATA DESCRIPTION	Sample ID	Sample Type	Sample Recovery (in.)	Blow Counts (N-Values)	%<#200
		0.6 7.5-in. Concrete					
		Brown, moist, Silty fine to medium SAND (SM), very loose	1	SS	12	1-1-1-1 (2)	
			2	SS	18	2-2-1-3 (3)	
		4.0 Brown, moist, fine Sandy lean CLAY (CL) with trace fine Gravel, medium stiff	3	SS	24	2-3-3-4 (6)	
	5		4	SS	24	2-3-3-14 (6)	
		8.0 Brown, moist to wet, Silty fine to medium SAND (SM), medium dense to dense	5	SS	24	9-15-17-22 (32)	
▽	10	Wet below 10-ft.	6	SS	16	5-10-14-10 (24)	
		13.0 Gray, wet, poorly graded fine to medium SAND (SP), medium dense	7	SS	16	6-9-15-18 (24)	
	15	15.0 Boring terminated at 15 feet below existing grade.					

TEST RESULTS
Plastic Limit X——X Liquid Limit
Water Content - ●
Penetration - ▨
10 20 30 40 50 60 70

Sample Type(s):
SS - Split Spoon

Notes:

This information pertains only to this boring and should not be interpreted as being indicitive of the site.

RECORD OF SUBSURFACE EXPLORATION

GET Solutions, Inc.
Geotechnical • Environmental • Testing

Virginia Beach
204 Grayson Road
Virginia Beach, VA 23642
757-518-1703

Williamsburg
1592-E Penniman Road
Williamsburg, VA 23185
757-564-6452

Elizabeth City
106 Capital Trace Unit E
Elizabeth City, NC 27909
252-335-9765

Jacksonville
415-A Western Blvd
Jacksonville, NC 28546
910-478-9915

BORING ID B-18

PROJECT NAME: **Naval Air Station Patuxent River Repair Runways 14-32 & 6-24**
PROJECT NUMBER: **WM14-180G**
CLIENT: **Johnson, Mirmiran & Thompson, Inc.**
SURFACE ELEVATION (MSL) (ft):
PROJECT LOCATION: **Patuxent River, MD**
LOGGED BY:
BORING LOCATION: **See Attached Boring Location Plan**
DATE STARTED: **10/23/2015**
DRILLING METHOD(S): **Rotary wash "mud"**
DATE COMPLETED: **10/23/2015**
GROUNDWATER*: INITIAL (ft) ▽: ___ AFTER ___ HOURS (ft) ▼: ___ CAVE-IN (ft) ◌: ___
DRILLER: **GET Solutions, Inc.**

The initial groundwater readings are not intended to indicate the static groundwater level.

Elevation (ft)	Depth (ft)	STRATA DESCRIPTION	Strata Legend	Sample ID	Sample Type	Sample Recovery (in.)	Blow Counts (N-Values)	%<#200	TEST RESULTS (Plastic Limit ×——× Liquid Limit; Water Content - ●; Penetration - ▨; 10 20 30 40 50 60 70)
	0.3	3-in. Topsoil							
		Brown, moist, lean CLAY (CL) with varying amounts of fine Sand, stiff		1	SS	24	2-3-6-9 (9)		
				2	SS	16	5-4-5-8 (9)		
	4.0	Brown, moist, Silty fine to medium SAND (SM), loose		3	SS	15	4-5-3-5 (8)		
	5								
	6.0	Orange/Tan, moist, poorly graded fine to coarse SAND (SP) with fine Gravel, loose to medium dense		4	SS	16	2-2-3-4 (5)		
				5	SS	16	3-5-9-12 (14)		
	10			6	SS	20	8-11-12-20 (23)		
				7	SS	5	8-13-15-19 (28)		
	15.0	Boring terminated at 15 feet below existing grade.							
	15								

Sample Type(s):
SS - Split Spoon

Notes:

This information pertains only to this boring and should not be interpreted as being indicitive of the site.

RECORD OF SUBSURFACE EXPLORATION

GET Solutions, Inc.
Geotechnical • Environmental • Testing

Virginia Beach
204 Grayson Road
Virginia Beach, VA 23642
757-518-1703

Williamsburg
1592-E Penniman Road
Williamsburg, VA 23185
757-564-6452

Elizabeth City
106 Capital Trace Unit E
Elizabeth City, NC 27909
252-335-9765

Jacksonville
415-A Western Blvd
Jacksonville, NC 28546
910-478-9915

BORING ID B-19

PROJECT NAME: **Naval Air Station Patuxent River Repair Runways 14-32 & 6-24**
PROJECT NUMBER: **WM14-180G**
CLIENT: **Johnson, Mirmiran & Thompson, Inc.**
SURFACE ELEVATION (MSL) (ft):
PROJECT LOCATION: **Patuxent River, MD**
LOGGED BY:
BORING LOCATION: **See Attached Boring Location Plan**
DATE STARTED: **10/23/2015**
DRILLING METHOD(S): **Rotary wash "mud"**
DATE COMPLETED: **10/23/2015**
GROUNDWATER*: INITIAL (ft) ▽: ___ AFTER ___ HOURS (ft) ▼: ___ CAVE-IN (ft) ◌: ___
DRILLER: **GET Solutions, Inc.**

The initial groundwater readings are not intended to indicate the static groundwater level.

Elevation (ft)	Depth (ft)	STRATA DESCRIPTION	Sample ID	Sample Type	Sample Recovery (in.)	Blow Counts (N-Values)	%<#200
	0.2	2-in. Topsoil					
		Brown, moist, Clayey fine to medium SAND (SC), medium dense	1	SS	22	4-6-7-8 (13)	
			2	SS	24	5-5-6-8 (11)	49
	4.0	Brown, moist, Silty fine to medium SAND (SM), loose	3	SS	22	7-5-5-3 (10)	
5	6.0	Orange/Tan, moist, poorly graded fine to coarse SAND (SP) with fine Gravel, loose to dense	4	SS	20	2-3-3-5 (6)	
			5	SS	24	2-4-6-7 (10)	
10			6	SS	2	11-21-21-23 (42)	
			7	SS	22	11-13-15-17 (28)	
15	15.0	Boring terminated at 15 feet below existing grade.					

TEST RESULTS

Plastic Limit X——X Liquid Limit
Water Content - ●
Penetration - ▨

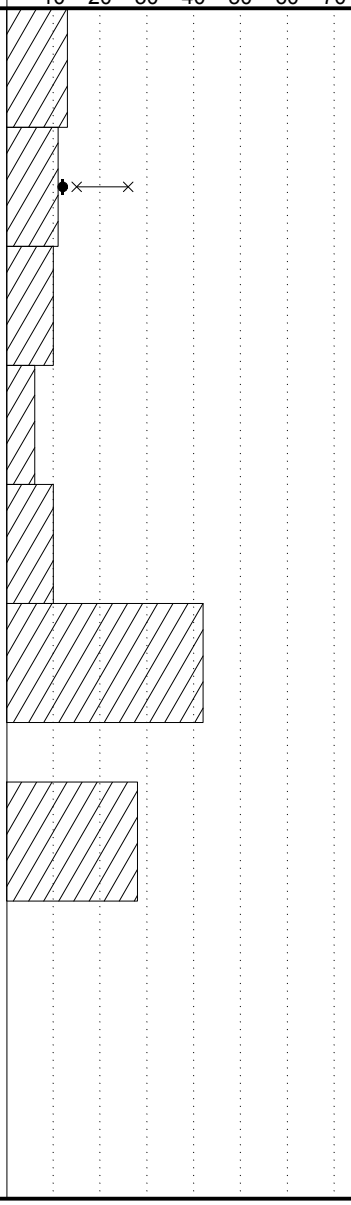

Sample Type(s):

SS - Split Spoon

Notes:

This information pertains only to this boring and should not be interpreted as being indicitive of the site.

APPENDIX IV

GENERALIZED SUBSURFACE SOIL PROFILE

GENERALIZED SOIL PROFILE

PROJECT NAME: Naval Air Station Patuxent River Repair Runways 14-32 & 6-24

PROJECT NUMBER: WM14-180G

PROJECT LOCATION: Patuxent River, MD

CLIENT: Johnson, Mirmiran & Thompson, Inc.

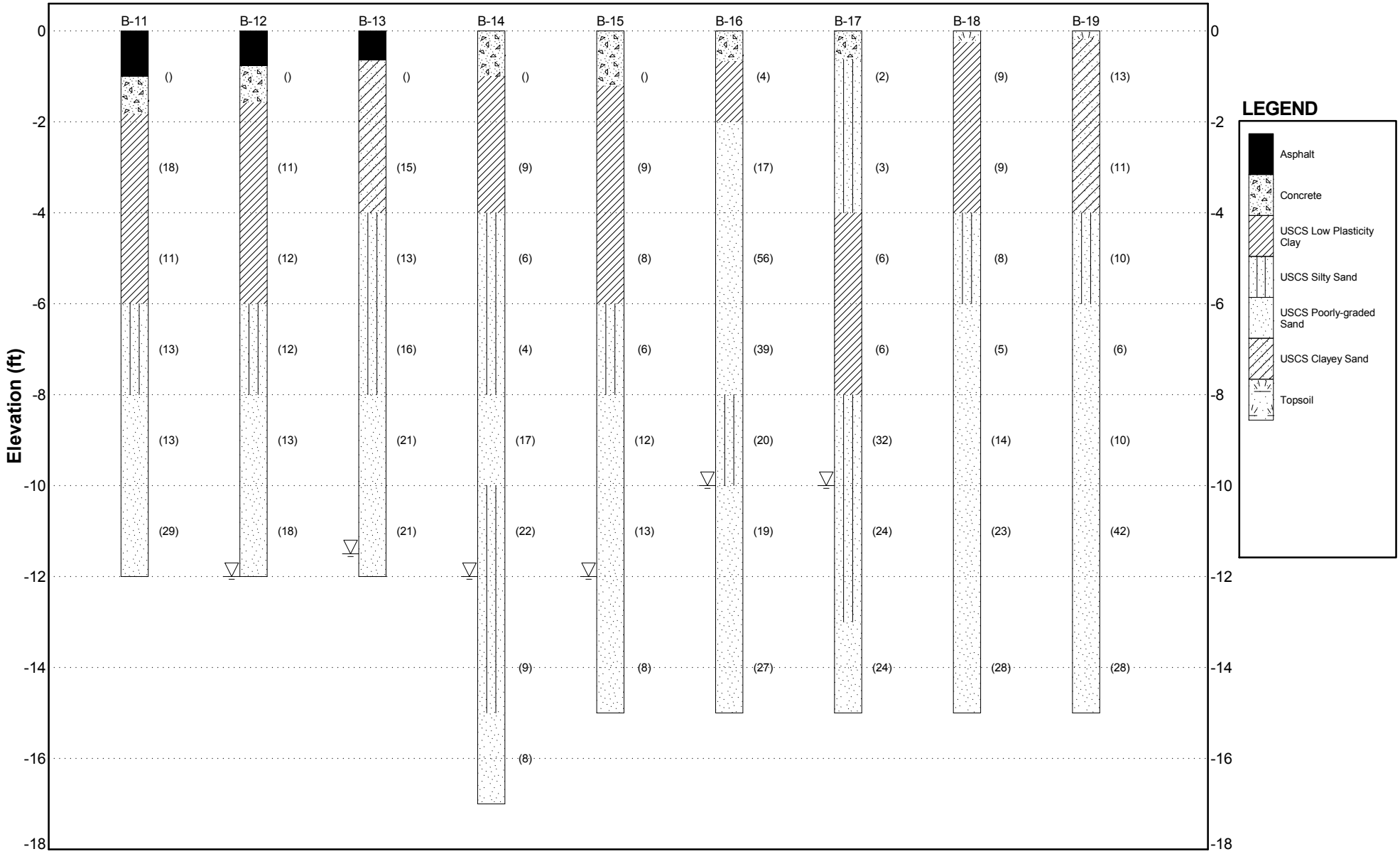

(Numerical Value) = Sample N-Value

APPENDIX V

PAVEMENT SECTION COMPOSITION AND DESCRIPTION

PAVEMENT SECTION COMPOSITION AND DESCRIPTION

Project Name: Naval Air Station Patuxent River Repair Runways 14-32 & 6-24

Date of Extraction: 23-Oct-2015

Project Number: WM14-180G

Project Location: Patuxent River, Maryland

Boring/Core Identification:

B-11

Boring/Core GPS Coordinates:

Latitude: -

Longitude: -

General Boring/Core Location: Runway 6-24

Pavement Section Composition:

Asphalt: 12 in.

Concrete: 10 in.

Void Underlying Pavement: no (yes/no)

Void Depth Below Pavement: N/A in.

Welded Wire Fabric (WWF) or Rebar: N/A (WWF/Rebar/Both)

Embedment Depths from Top of Core: N/A in. Rebar

N/A in. Welded Wire Fabric

Vapor Barrier or Geotextile Fabric: no (yes/no)

Description of Vapor Barrier or Geotextile: N/A

Shallow Subgrade Soil Description: Brown, Moist, lean CLAY (CL) with varying amounts of fine Sand

General Core Notes and Remarks: -

Top of Core

Bottom of Core

GET Solutions, Inc.
Geotechnical • Environmental • Testing
1592-E Penniman Road
Williamsburg, Virginia 23185
Tel: 757-564-6452 Fax: 757-564-6453

PAVEMENT SECTION COMPOSITION AND DESCRIPTION

Project Name: Naval Air Station Patuxent River Repair Runways 14-32 & 6-24

Date of Extraction: 23-Oct-2015

Project Number: WM14-180G

Project Location: Patuxent River, Maryland

Boring/Core Identification:

B-12

Boring/Core GPS Coordinates:

Latitude: -

Longitude: -

General Boring/Core Location: Runway 6-24

Pavement Section Composition:

Asphalt: 9.25 in.

Concrete: 9.75 in.

Void Underlying Pavement: no (yes/no)

Void Depth Below Pavement: N/A in.

Welded Wire Fabric (WWF) or Rebar: N/A (WWF/Rebar/Both)

Embedment Depths from Top of Core: N/A in. Rebar

N/A in. Welded Wire Fabric

Vapor Barrier or Geotextile Fabric: no (yes/no)

Description of Vapor Barrier or Geotextile: N/A

Shallow Subgrade Soil Description: Mottled Orange/Gray, Moist, lean CLAY (CL) with varying amounts of fine Sand

General Core Notes and Remarks: -

Top of Core

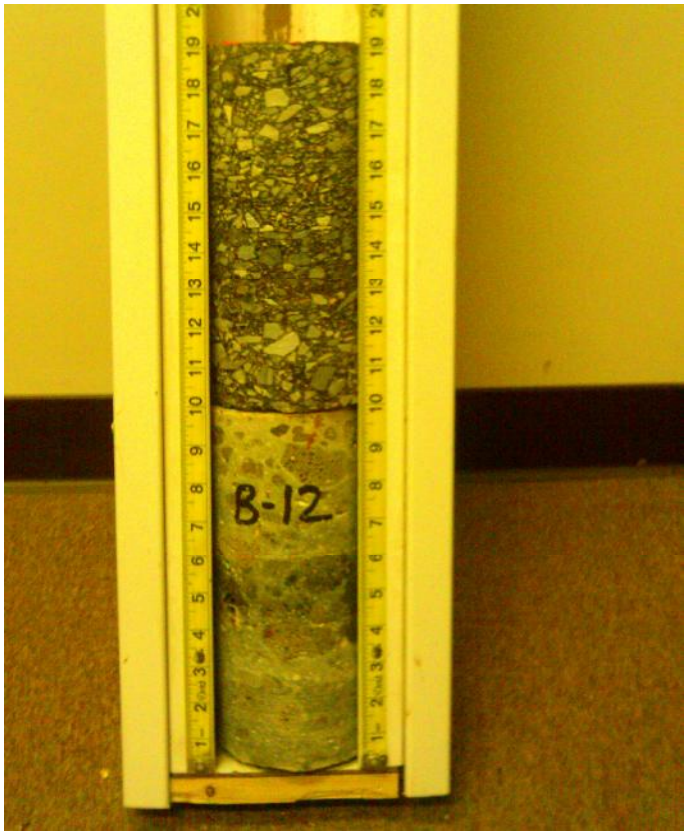

Bottom of Core

PAVEMENT SECTION COMPOSITION AND DESCRIPTION

Project Name: Naval Air Station Patuxent River Repair Runways 14-32 & 6-24

Date of Extraction: 23-Oct-2015

Project Number: WM14-180G

Project Location: Patuxent River, Maryland

Boring/Core Identification:

B-13

Boring/Core GPS Coordinates:

Latitude: -

Longitude: -

General Boring/Core Location: Runway 6-24

Pavement Section Composition:

Asphalt: 7.75 in.

Void Underlying Pavement: no (yes/no)

Void Depth Below Pavement: N/A in.

Welded Wire Fabric (WWF) or Rebar: N/A (WWF/Rebar/Both)

Embedment Depths from Top of Core: N/A in. Rebar

N/A in. Welded Wire Fabric

Vapor Barrier or Geotextile Fabric: no (yes/no)

Description of Vapor Barrier or Geotextile: N/A

Shallow Subgrade Soil Description: Brown, Moist, Clayey fine to medium SAND (SC)

General Core Notes and Remarks: -

Top of Core

Bottom of Core

GET Solutions, Inc.
Geotechnical • Environmental • Testing
1592-E Penniman Road
Williamsburg, Virginia 23185
Tel: 757-564-6452 Fax: 757-564-6453

PAVEMENT SECTION COMPOSITION AND DESCRIPTION

Project Name: Naval Air Station Patuxent River Repair Runways 14-32 & 6-24

Date of Extraction: 23-Oct-2015

Project Number: WM14-180G

Project Location: Patuxent River, Maryland

Boring/Core Identification:

B-14

Boring/Core GPS Coordinates:

Latitude: -

Longitude: -

General Boring/Core Location: EMP Towaway

Pavement Section Composition:

Concrete: 12 in.

Void Underlying Pavement: no (yes/no)

Void Depth Below Pavement: N/A in.

Welded Wire Fabric (WWF) or Rebar: N/A (WWF/Rebar/Both)

Embedment Depths from Top of Core: N/A in. Rebar

N/A in. Welded Wire Fabric

Vapor Barrier or Geotextile Fabric: no (yes/no)

Description of Vapor Barrier or Geotextile: N/A

Shallow Subgrade Soil Description: Brown, Moist, lean CLAY (CL) with trace fine Sand

General Core Notes and Remarks: -

Top of Core

Bottom of Core

GET Solutions, Inc.
Geotechnical • Environmental • Testing
1592-E Penniman Road
Williamsburg, Virginia 23185
Tel: 757-564-6452 Fax: 757-564-6453

PAVEMENT SECTION COMPOSITION AND DESCRIPTION

Project Name: Naval Air Station Patuxent River Repair Runways 14-32 & 6-24

Date of Extraction: 23-Oct-2015

Project Number: WM14-180G

Project Location: Patuxent River, Maryland

Boring/Core Identification:

B-15

Boring/Core GPS Coordinates:

Latitude: -

Longitude: -

General Boring/Core Location: EMP Towaway

Pavement Section Composition:

Concrete: 14.5 in.

Void Underlying Pavement: no (yes/no)

Void Depth Below Pavement: N/A in.

Welded Wire Fabric (WWF) or Rebar: N/A (WWF/Rebar/Both)

Embedment Depths from Top of Core: N/A in. Rebar

N/A in. Welded Wire Fabric

Vapor Barrier or Geotextile Fabric: no (yes/no)

Description of Vapor Barrier or Geotextile: N/A

Shallow Subgrade Soil Description: Brown, Moist, lean CLAY (CL) with varying amounts of fine Sand

General Core Notes and Remarks: -

Top of Core

Bottom of Core

GET Solutions, Inc.
Geotechnical • Environmental • Testing
1592-E Penniman Road
Williamsburg, Virginia 23185
Tel: 757-564-6452 Fax: 757-564-6453

PAVEMENT SECTION COMPOSITION AND DESCRIPTION

Project Name: Naval Air Station Patuxent River Repair Runways 14-32 & 6-24

Date of Extraction: 23-Oct-2015

Project Number: WM14-180G

Project Location: Patuxent River, Maryland

Boring/Core Identification:

B-16

Boring/Core GPS Coordinates:

Latitude: -

Longitude: -

General Boring/Core Location: Compass Rose

Pavement Section Composition:

Concrete: 8 in.

Void Underlying Pavement: no (yes/no)

Void Depth Below Pavement: N/A in.

Welded Wire Fabric (WWF) or Rebar: N/A (WWF/Rebar/Both)

Embedment Depths from Top of Core: N/A in. Rebar

N/A in. Welded Wire Fabric

Vapor Barrier or Geotextile Fabric: no (yes/no)

Description of Vapor Barrier or Geotextile: N/A

Shallow Subgrade Soil Description: Gray, Moist, lean CLAY (CL) with trace fine Sand

General Core Notes and Remarks: Core deteriorated during the coring process.

Top of Core

Bottom of Core

GET Solutions, Inc.
Geotechnical • Environmental • Testing
1592-E Penniman Road
Williamsburg, Virginia 23185
Tel: 757-564-6452 Fax: 757-564-6453

PAVEMENT SECTION COMPOSITION AND DESCRIPTION

Project Name: Naval Air Station Patuxent River Repair Runways 14-32 & 6-24

Date of Extraction: 23-Oct-2015

Project Number: WM14-180G

Project Location: Patuxent River, Maryland

Boring/Core Identification:

B-17

Boring/Core GPS Coordinates:

Latitude: -

Longitude: -

General Boring/Core Location: Compass Rose

Pavement Section Composition:

Concrete: 7.5 in.

Void Underlying Pavement: no (yes/no)

Void Depth Below Pavement: N/A in.

Welded Wire Fabric (WWF) or Rebar: N/A (WWF/Rebar/Both)

Embedment Depths from Top of Core: N/A in. Rebar

N/A in. Welded Wire Fabric

Vapor Barrier or Geotextile Fabric: no (yes/no)

Description of Vapor Barrier or Geotextile: N/A

Shallow Subgrade Soil Description: Brown, Moist, Clayey fine to medium SAND (SC)

General Core Notes and Remarks: -

Top of Core

Bottom of Core

GET Solutions, Inc.
Geotechnical • Environmental • Testing
1592-E Penniman Road
Williamsburg, Virginia 23185
Tel: 757-564-6452 Fax: 757-564-6453

PAVEMENT SECTION COMPOSITION AND DESCRIPTION

Project Name: Naval Air Station Patuxent River Repair Runways 14-32 & 6-24

Date of Extraction: 22-Oct-2015

Project Number: WM14-180G

Project Location: Patuxent River, Maryland

Boring/Core Identification:

C-32

Boring/Core GPS Coordinates:

Latitude: -

Longitude: -

General Boring/Core Location: Taxiway B

Pavement Section Composition:

Asphalt: 8.75 in.

Concrete: 7.5 in.

Void Underlying Pavement: no (yes/no)

Void Depth Below Pavement: N/A in.

Welded Wire Fabric (WWF) or Rebar: N/A (WWF/Rebar/Both)

Embedment Depths from Top of Core: N/A in. Rebar

N/A in. Welded Wire Fabric

Vapor Barrier or Geotextile Fabric: no (yes/no)

Description of Vapor Barrier or Geotextile: N/A

Shallow Subgrade Soil Description: Not Encountered

General Core Notes and Remarks: Paving fabric encountered 2.5-inches below the top of the core.

Top of Core

Bottom of Core

GET Solutions, Inc.
Geotechnical • Environmental • Testing
1592-E Penniman Road
Williamsburg, Virginia 23185
Tel: 757-564-6452 Fax: 757-564-6453

PAVEMENT SECTION COMPOSITION AND DESCRIPTION

Project Name: Naval Air Station Patuxent River Repair Runways 14-32 & 6-24

Date of Extraction: 22-Oct-2015

Project Number: WM14-180G

Project Location: Patuxent River, Maryland

Boring/Core Identification:

C-33

Boring/Core GPS Coordinates:

Latitude: -

Longitude: -

General Boring/Core Location: Runway 2-20

Pavement Section Composition:

Asphalt: 11.25 in.

Concrete: 10.5 in.

Void Underlying Pavement: no (yes/no)

Void Depth Below Pavement: N/A in.

Welded Wire Fabric (WWF) or Rebar: N/A (WWF/Rebar/Both)

Embedment Depths from Top of Core: N/A in. Rebar

N/A in. Welded Wire Fabric

Vapor Barrier or Geotextile Fabric: no (yes/no)

Description of Vapor Barrier or Geotextile: N/A

Shallow Subgrade Soil Description: Not Encountered

General Core Notes and Remarks: Paving fabric encountered 3.25-inches below the top of the core.

Top of Core

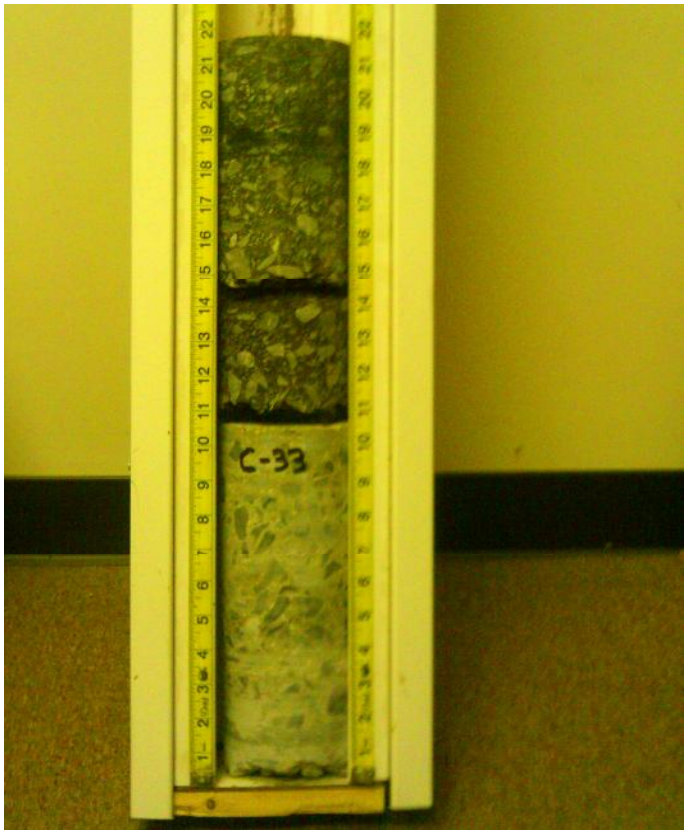

Bottom of Core

GET Solutions, Inc.
Geotechnical • Environmental • Testing
1592-E Penniman Road
Williamsburg, Virginia 23185
Tel: 757-564-6452 Fax: 757-564-6453