GENERAL NOTES:

1. ALL WORK SHALL BE PERFORMED AS REQUIRED BY APPLICABLE SECTIONS OF THE LATEST EDITION OF NFPA 70, THE NATIONAL ELECTRICAL CODE, IEEE C2, NAVAIR 51-50AAA-2, ALL APPLICABLE UFC STANDARDS AND SPECIFICATIONS, FAA ADVISORY CIRCULARS AND ALL GOVERNING LOCAL CODES, LAWS, AND/OR REGULATIONS.

2. ALL WORK SHALL COMPLY WITH GUIDELINES IN UFC 3-260-01, PARAGRAPH B14-6.7, SPECIAL SAFETY REQUIREMENTS DURING CONSTRUCTION, FOR SETBACK DISTANCES OF CONSTRUCTION ACTIVITIES. THE CONTRACTOR SHALL ESTABLISH, IN ADVANCE, A SPECIFIC DEMARCATION OR HOLD LINE LOCATION FOR PERSONNEL AND EQUIPMENT DURING THE TIMES OF WORK INTERRUPTION TO ENSURE THE SAFETY OF THE CONTRACTOR AND AIRCRAFT OPERATIONS.

3. CONTRACTOR SHALL, IN THE PRESENCE OF THE CONTRACTING OFFICER, PERFORM A SURVEY OF EXISTING EDGE LIGHTS, THRESHOLD LIGHTS, CENTERLINE LIGHTS, WAVE OFF LIGHTS AND RUNWAY DISTANCE REMAINING MARKERS TO ASSESS AND DOCUMENT THE LOCATION OF ANY NON-FUNCTIONAL OR DAMAGED LIGHTING UNITS OR ASSOCIATED EQUIPMENT PRIOR TO CONSTRUCTION. ANY DAMAGE OR LOSS OF FUNCTION SHOWN TO HAVE OCCURRED DURING CONSTRUCTION SHALL BE PROMPTLY REPAIRED BY THE CONTRACTOR AT NO EXPENSE TO THE GOVERNMENT.

4. CONSTRUCTION AND MAINTENANCE BY OTHERS MAY OCCUR CONCURRENTLY AND IN THE VICINITY OF CONSTRUCTION ASSOCIATED WITH THIS PROJECT. THE CONTRACTOR SHALL COORDINATE HIS OPERATIONS WITH OTHER CONTRACTORS AND COOPERATE WITH THE MAINTENANCE CREWS WHEN WORKING ON THE PROJECT. THE CONTRACTOR IS RESPONSIBLE FOR OBTAINING ALL OTHER TRADES' DRAWINGS AND SPECIFICATIONS AND COORDINATING WITH ALL OTHER TRADES DURING BIDDING AND CONSTRUCTION.

5. THREE WEEKS PRIOR TO REMOVAL OR EXISTING CABLES OR EXCAVATING IN AREA OF EXISTING UNDERGROUND CONDUITS THE CONTRACTOR SHALL MEET WITH THE CONTRACTING OFFICER TO DETERMINE TAXIWAY OR RUNWAY CLOSURE TIMES AND DURATIONS. THE CONTRACTOR SHALL ARRANGE FOR NAS PATUXENT RIVER PERSONNEL TO BE ON SITE DURING WORK ON AIRFIELD LIGHTING CABLES. THE CONTRACTOR SHALL IDENTIFY AND MARK ALL AIRFIELD LIGHTING CABLES PRIOR TO ANY WORK.

6. THE CONTRACTOR SHALL LOCATE ALL UNDERGROUND UTILITIES PRIOR TO ANY EXCAVATIONS.

7. THE LOCATIONS OF UNDERGROUND UTILITIES AND FACILITIES SHOWN ON THE PLANS HAVE BEEN OBTAINED FROM AVAILABLE RECORDS AND ARE BELIEVED TO BE CORRECT. NO GUARANTEE IS MADE AS TO THEIR ACCURACY OR COMPLETENESS. COORDINATE ALL ELECTRICAL ITEMS WITH EXISTING FIELD CONDITIONS. LOCATIONS SHOWN ARE APPROXIMATE AND MAY REQUIRE MINOR ADJUSTMENT IN THE FIELD TO SATISFY THE DESIGN INTENT.

8. THE CONTRACTOR SHALL LOCATE AND IDENTIFY ALL UNDERGROUND UTILITIES IN THE WORK AREA PRIOR TO CONSTRUCTION. ANY UNDERGROUND UTILITIES LOCATED WHICH DO NOT APPEAR ON THE PLANS SHALL BE BROUGHT TO THE ATTENTION OF THE CONTRACTING OFFICER.

9. ANY DAMAGE TO FACILITIES CAUSED BY THE CONTRACTOR SHALL BE PROMPTLY REPAIRED AT THE CONTRACTORS EXPENSE. THE CONTRACTING OFFICER MAY ELECT TO HAVE THE REPAIR PERFORMED BY OTHERS IN WHICH CASE THE CONTRACTOR SHALL BE RESPONSIBLE FOR PAYING THE INCURRED COSTS OF REPAIRS.

10. THE CONTRACTOR SHALL BE RESPONSIBLE FOR MAINTAINING CONTINUITY OF ALL POWER, CONTROL, AND COMMUNICATION FUNCTIONS TO ALL AREAS AFFECTED BY DEMOLITION AND/OR NEW CONSTRUCTION.COORDINATE ALL DOWN TIME OF SYSTEMS WITH THE CONTRACTING OFFICER.

11. ALL EMPTY CONDUITS SHALL HAVE PULL ROPE INSTALLED.

12. PRIOR TO SUBMITTING BID, THE CONTRACTOR SHALL VISIT THE SITE AND BE THOROUGHLY FAMILIAR WITH THE EXISTING CONDITIONS AND PROPOSED CONSTRUCTION. CONTRACTOR SHALL INCLUDE IN THEIR BID ALL MATERIAL, LABOR AND ALL INCIDENTALS FOR A COMPLETE INSTALLATION WHETHER SPECIFICALLY CALLED FOR OR NOT. ALL ERRORS, DISCREPANCIES AND MISSED ITEMS SHALL BE BROUGHT TO THE ATTENTION OF THE ENGINEER DURING THE BIDDING PROCESS BY THE CONTRACTOR. THESE ITEMS SHALL BE INCLUDED IN THE BID PRICE. NO EXTRA COST WILL BE ALLOWED FOR ANY DISCREPANCY WHICH COULD HAVE BEEN NOTICED AT THE SITE VISIT BY THE CONTRACTOR.

13. THE CONTRACTOR SHALL THOROUGHLY INSPECT THE SITE PRIOR TO CONSTRUCTION TO VERIFY EXISTING CONDITIONS AND SHALL PROVIDE ALL NECESSARY STAKE OUT OF LINE AND GRADE FOR CONDUIT FOR THE CONTRACTING OFFICER'S APPROVAL PRIOR TO EXCAVATION.

14. THE CONTRACTOR IS RESPONSIBLE FOR PATCHING PAVEMENT AFFECTED BY PROPOSED DUCT SYSTEM OR CONDUIT INSTALLATION. SEE PAVEMENT DETAILS SHEET FOR APPROPRIATE DETAILS.

15. THE CONTRACTOR SHALL STAKE OUT EACH LIGHT BASE FOR THE CONTRACTING OFFICERS APPROVAL PRIOR TO EXCAVATION.

16. IN THE EVENT ANY OBSTRUCTIONS AND/OR UTILITIES NOT SHOWN ON THE PLANS ARE ENCOUNTERED DURING CONSTRUCTION ALL WORK SHALL STOP AND THE CONTRACTING OFFICER NOTIFIED PRIOR TO PROCEEDING WITH WORK.

17. THE CONTRACTOR SHALL BE RESPONSIBLE FOR LOCATING, SUPPORTING, AND PROTECTING EXISTING UTILITIES AND ALL NECESSARY COORDINATION. DAMAGE TO EXISTING FACILITIES (PIPING, CONDUIT, DUCTWORK, ELEVATED OR IN-PAVEMENT LIGHT, AIRFIELD SIGN, ETC) SHALL BE REPAIRED BY THE CONTRACTOR AT HIS/HER EXPENSE.

18. CONSTRUCTION LIMITS - ALL CONTRACTOR VEHICLES AND TRAFFIC (UNLESS OTHERWISE AUTHORIZED) SHALL REMAIN WITHIN THE DESIGNATED CONSTRUCTION LIMITS OR HAUL ROUTES.

19. SEE PHASING PLANS FOR SEQUENCE OF ELECTRICAL WORK.

20. ALL FIXTURE, EQUIPMENT AND STRUCTURE LOCATIONS AND ELEVATIONS QUOTED IN THESE DOCUMENTS MUST BE VERIFIED AND ADJUSTED IF NECESSARY BY THE CONTRACTOR TO AVOID ANY UNFORESEEN OBSTRUCTIONS AND TO COMPLY WITH ALL REQUIREMENTS OF ALL APPLICABLE NAVFAC, UFC, FAA AND NAS PATUXENT RIVER REQUIREMENTS.

21. DRAWINGS ARE DIAGRAMMATIC IN NATURE, CONTRACTOR SHALL VERIFY DIMENSIONS PRIOR TO INSTALLATION. CONTRACTOR SHALL COORDINATE ALL WORK WITH OTHER DIVISION TRADES TO PROVIDE A COMPLETE AND OPERABLE SYSTEM. CONTRACTOR SHALL COORDINATE LOCATION OF FIXTURES, DEVICES, ETC. WITH OTHER TRADES IN ORDER TO AVOID INTERFERENCES.

22. ARCHITECTURAL AND CIVIL FEATURES SHOWN ON THESE DRAWINGS ARE FOR BACKGROUND INFORMATION ONLY. REFER TO ARCHITECTURAL, CIVIL AND STRUCTURAL DRAWINGS FOR ACTUAL BUILDING AND SURFACE CONSTRUCTION OF WALL, CURBS AND PAVEMENT SURFACES. REFER TO EQUIPMENT DRAWINGS FOR ACTUAL LOCATION OF EQUIPMENT.

23. SYSTEM AND EQUIPMENT GROUNDING CONTINUITY SHALL BE ASSURED AS REQUIRED BY APPLICABLE SECTIONS OF THE NATIONAL ELECTRICAL CODE.

24. ALL WIRING SHALL BE TYPE "XHHW" UNLESS OTHERWISE NOTED; MINIMUM WIRING SHALL BE #12 (POWER WIRE). ALL WIRE SHALL BE COPPER. MINIMUM CONDUIT SIZE SHALL BE 3/4". AIRFIELD LIGHTING CABLE SHALL BE FAA TYPE L-824C, AWG 3^

25. ALL CIRCUIT PROTECTIVE DEVICES SHALL HAVE THE REQUIRED RATING INTERRUPTING CAPACITY EQUAL TO OR GREATER THAN THE AVAILABLE SHORT-CIRCUIT CURRENT AT ITS SUPPLY TERMINAL; MINIMUM INTERRUPTING CAPACITY SHALL BE 10,000 AMPS, SYMMETRICAL A.I.C. FOR 120/208V SYSTEMS AND 14,000 AMPS SYMMETRICAL A.I.C. FOR 277/480V SYSTEMS. REFER TO PANEL SCHEDULES FOR A.I.C. RATINGS.

26. PROVIDE ALL LABOR, MATERIALS, TOOLS, EQUIPMENT, COORDINATION, ADDITIONAL DESIGN AND ALL INCIDENTALS NECESSARY TO PROVIDE A COMPLETE AND OPERABLE SYSTEM AS DETAILED ON PLANS TO THE SATISFACTION OF THE ENGINEER AND THE CONTRACTING OFFICER. COORDINATE ALL WORK WITH THE CONTRACTING OFFICER AND ENGINEER BEFORE THE START OF WORK.

27. MATERIAL AND EQUIPMENT SHALL BE FAA, UL, NEMA, ANSI, IEEE, ADA & CBM APPROVED OR CERTIFIED AS REQUIRED FOR INTENDED SERVICE. MATERIAL AND INSTALLATION SHALL MEET REQUIREMENTS OF NATIONAL AND STATE ELECTRICAL CODE, UFC AND NAVFAC STANDARDS.

28. THE CONTRACTOR SHALL GIVE NOTICES, FILE PLANS, OBTAIN PERMITS AND LICENSES, PAY FEES AND BACK CHARGES, AND OBTAIN NECESSARY APPROVALS FROM AUTHORITIES THAT HAVE JURISDICTION. IT IS THE CONTRACTOR'S RESPONSIBILITY TO DETERMINE THE REQUIRED NOTICES, PERMITS, LICENSES, FEES, BACK CHARGES AND APPROVALS REQUIRED FOR THIS PROJECT.

29. THE CONTRACTOR SHALL MAINTAIN RECORD DRAWINGS ON SITE. RECORD SET MUST BE COMPLETE AND CURRENT AND AVAILABLE FOR INSPECTION WHEN REQUISITIONS FOR PAYMENT ARE SUBMITTED.

30. ALL WORK AND MATERIALS SHALL BE GUARANTEED IN WRITING FOR ONE YEAR FROM DATE OF FINAL ACCEPTANCE. REPAIR OR REPLACE DEFECTIVE MATERIALS OR INSTALLATION AT NO COST TO OWNER DURING THE GUARANTEE PERIOD. CORRECT DAMAGE CAUSED IN MAKING NECESSARY REPAIRS AND REPLACEMENTS UNDER GUARANTEE AT NO COST TO OWNER. SUBMIT GUARANTEE TO OWNER BEFORE FINAL PAYMENT.

31. UPON REMOVAL, CONTRACTOR SHALL INVENTORY MAJOR ELECTRICAL ITEMS THAT ARE REMOVED AND PROVIDE A LIST TO THE OWNER FOR THEIR SELECTION OF ITEMS TO BE RETAINED. ALL ITEMS REJECTED BY THE OWNER SHALL BECOME THE PROPERTY OF THE CONTRACTOR AND SHALL BE REMOVED FROM THE SITE.

32. LIGHTING BALLASTS AND CAPACITORS CONTAINING PCB's AS DEFINED BY THE ENVIRONMENTAL PROTECTION AGENCY (EPA), SHALL BE DISPOSED OF IN ACCORDANCE WITH ALL APPLICABLE LOCAL, FEDERAL, AND EPA REGULATIONS.

33. DEMOLITION OF EXISTING CIRCUITS AND DUCTBANKS THAT FEED THROUGH TO OTHER EQUIPMENT SHALL OCCUR AFTER NEW INSTALLATION HAS BEEN COMPLETED. IF THERE ARE ENERGIZED CIRCUITS REMAINING IN DUCTBANKS TO BE DEMOLISHED, COORDINATE WITH THE CONTRACTING OFFICER TO CONFIRM IF THE CIRCUIT NEEDS TO REMAIN IN SERVICE.

34. CONDUIT BETWEEN ALL NEW RUNWAY LIGHTING AND TAXIWAY LIGHTING FIXTURES ON THE CONSTRUCTION PLANS IS SHOWN DIAGRAMMATICALLY AS A SINGLE LINE FOR CLARITY. THIS SINGLE LINE REPRESENTS TWO SEPARATE CONDUITS, EACH CONTAINING AN INTERLEAVED CIRCUIT, UNLESS OTHERWISE NOTED. AT EACH LIGHT FIXTURE, THE CONDUIT CONTAINING THE CIRCUIT NOT BEING CONNECTED SHALL BE ROUTED AROUND THE FIXTURE ON THE OUTBOARD SIDE OF THE RUNWAY/TAXIWAY.

35. TRAINING WILL BE PROVIDED FOR AIR TRAFFIC CONTROL TOWER PERSONNEL FOR THE ADDED AND MODIFIED AIRFIELD SYSTEMS. THE TRAINING WILL CONSIST OF A MINIMUM OF TWO (2) 4 HOUR SESSIONS AND ACCOMMODATE 15 PEOPLE AT EACH SESSION. A TRAINING MANUAL SHALL BE PROVIDED AND TWO DVDS WITH A VIDEO RECORDING OF THE TRAINING WILL BE PROVIDED.

36. THE CONTRACTOR SHALL PERFORM AIRFIELD LIGHTING LINE TEST PLAN AND MEGGERING ON ALL CIRCUITS AND SHALL PROVIDE TYPED WRITTEN REPORTS OF ALL TEST RESULTS.

CONSTRUCTION LEGEND:

—#— 2" PVC SCHEDULE 40 CONDUIT WITH #6 AWG CABLE AND #4 COPPER COUNTERPOISE, NUMBER OF HASH MARKS INDICATE THE NUMBER OF #6 CABLES

– –#– – 2" DIRECTIONALLY DRILLED HDPE CONDUIT WITH #6 AWG CABLE AND #4 COPPER COUNTERPOISE, NUMBER OF HASH MARKS INDICATE THE NUMBER OF #6 CABLES

R1 097 W W FAA L-862 BI-DIRECTIONAL ELEVATED HIGH INTENSITY RUNWAY EDGE LIGHT, WHITE/WHITE LENS COLOR, CIRCUIT AND FIXTURE NUMBER AS INDICATED

R2 001 W Y FAA L-862 BI-DIRECTIONAL ELEVATED HIGH INTENSITY RUNWAY EDGE LIGHT, WHITE/YELLOW LENS COLOR, CIRCUIT AND FIXTURE NUMBER AS INDICATED

R1 045 W W FAA L-850C BI-DIRECTIONAL IN-PAVEMENT HIGH INTENSITY RUNWAY EDGE LIGHT, WHITE/WHITE LENS COLOR, CIRCUIT AND FIXTURE NUMBER AS INDICATED

R2 001 W Y FAA L-850C (RUNWAY) OR L-850D (THRESHOLD) BI-DIRECTIONAL IN-PAVEMENT HIGH INTENSITY EDGE LIGHT, WHITE/YELLOW OR GREEN/RED LENS COLOR, CIRCUIT AND FIXTURE NUMBER AS INDICATED

C2 201 W W L-852N (NAVY) BI-DIRECTIONAL IN-PAVEMENT HIGH INTENSITY RUNWAY CENTERLINE LIGHT, WHITE/WHITE LENS COLOR, CIRCUIT AND FIXTURE NUMBER AS INDICATED

C1 054 W R L-852N (NAVY) BI-DIRECTIONAL IN-PAVEMENT HIGH INTENSITY RUNWAY CENTERLINE LIGHT, WHITE/RED LENS COLOR, CIRCUIT AND FIXTURE NUMBER AS INDICATED

R2 166 FAA L-858 LIGHTED RUNWAY DISTANCE MARKER, CIRCUIT AND FIXTURE NUMBER AS INDICATED

R1 150 G R FAA L-862 BI-DIRECTIONAL ELEVATED HIGH INTENSITY THRESHOLD LIGHT, GREEN/RED LENS COLOR, CIRCUIT AND FIXTURE NUMBER AS INDICATED

A1 149 G FAA L-850E UNI-DIRECTIONAL IN-PAVEMENT HIGH INTENSITY THRESHOLD LIGHT, GREEN LENS COLOR, CIRCUIT AND FIXTURE NUMBER AS INDICATED

R1 001 G FAA-E-982, 500W, PAR 56, OUTBOARD THRESHOLD LIGHT, GREEN LENS COLOR, CIRCUIT AND FIXTURE NUMBER AS INDICATED

TW A RE-INSTALL OR PROVIDE, AS NOTED, L-861T, TAXIWAY EDGE LIGHT WITH BLUE LENS, CIRCUIT NUMBER AS INDICATED.

SYM	DESCRIPTION	DATE	APPR

NAVFAC

STATE OF MARYLAND — JONATHAN D. THOMPSON — No. 24789 — PROFESSIONAL ENGINEER

Professional Certification
I HEREBY CERTIFY THAT THESE DOCUMENTS WERE PREPARED OR APPROVED BY ME, AND THAT I AM A DULY LICENSED PROFESSIONAL ENGINEER UNDER THE LAWS OF THE STATE OF MARYLAND, LICENSE NO. 24789, EXPIRATION DATE: 07/05/17. SEAL

JOHNSON, MIRMIRAN & THOMPSON
Gannett Fleming
A Joint Venture
272 Bendix Road, Suite 260
Virginia Beach, Virginia, 23452
Telephone: (757) 499-1895
Web: www.jmt.com
A/E INFO

APPROVED
FOR COMMANDER NAVFAC
ACTIVITY
JAMES FLETCHER PER CHECKLIST
SATISFACTORY TO DATE 9/27/2016
DES. RCH DRW RCH CHK DJP
PM/DM RH
BRANCH MANAGER
CHIEF ENG/ARCH E. GALLAHER, PE

DEPARTMENT OF THE NAVY — NAVAL FACILITIES ENGINEERING COMMAND — WASHINGTON, D.C.
NAVFAC WASHINGTON
NAVAL AIR STATION PATUXENT RIVER — PATUXENT RIVER, MARYLAND
IPT BLUE
FY16 SPECIAL PROJECT RM12-2137
REPAIR RUNWAYS 14-32 & 6-24 - PHASE 3
ELECTRICAL GENERAL NOTES

SCALE: AS NOTED
EPROJECT NO.: 1382138
CONSTR. CONTR. NO. N40080-17-R-0002
NAVFAC DRAWING NO. 13080238
SHEET 180 OF 206
EA001

DRAWFORM REVISION: 10 MARCH 2009

FILE NAME: G:\PHPA\100863_009_FY16_Repair_Runways_\CADD\Phase 3\Electrical_Phase 3\10-0863-009-EA001.dwg LAYOUT NAME: EA001 ELECTRICAL GENERAL NOTES PLOTTED: Tuesday, September 27, 2016 - 3:56pm USER: rhurst

ABBREVIATIONS:

A	AMPERE
AC	ASPHALT CONCRETE
AC	ALTERNATING CURRENT
ACI	AMERICAN CONCRETE INSTITUTE
ACS PNL	ACCESS PANEL
ADH	ADHESIVE
ADJ	ADJACENT, ADJOINING, ADJUSTABLE
AFF	ABOVE FINISHED FLOOR
AFG	ABOVE FINISHED GRADE
AGGR	AGGREGATE
AIC	AMPERE INTERRUPTING CAPACITY
ALCMS	AIRPORT LIGHTING CONTROL & MONITORING SYSTEM
ALSF	APPROACH LIGHT SYSTEM WITH SEQUENTIAL FLASHERS
ALT	ALTERNATE
ALUM	ALUMINUM
AMP	AMPERE
AMU	MEGGERING UNIT
ANCH	ANCHOR
ANOD	ANODIZE
ANSI	AMERICAN NATIONAL STANDARDS INSTITUTE
AP	ACCESS PANEL
APPROX	APPROXIMATE
ASPH	ASPHALT
ASS	AMMETER SELECTOR SWITCH
ATCT	AIR TRAFFIC CONTROL TOWER
ATS	AUTOMATIC TRANSFER SWITCH
AUTO	AUTOMATIC
AUX	AUXILIARY
AVG	AVERAGE
AWG	AMERICAN WIRE GAUGE
BDRY	BOUNDARY
BITUM	BITUMINOUS
BLDG	BUILDING
BLK	BLOCK
BLKG	BLOCKING
BLW	BELOW
BM	BENCHMARK
BTWN	BETWEEN
BRKR	BREAKER
BW	BOTH WAYS
C	CONDUIT
C/L	CENTERLINE
CAP	CAPACITY
CAT	CATEGORY
CB	CATCH BASIN
CCR	CONSTANT CURRENT REGULATOR
CERT	CERTIFIED
CFM	CUBIC FEET PER MINUTE
CH	CHANNEL
CHFR	CHAMFER
CHK	CHECK
CI	CAST IRON
CIP	CAST-IN-PLACE
CIR	CIRCUIT
CJ	CONTROL JOINT
CKT	CIRCUIT
CL	CENTER LINE
CLR	CLEAR
CMP	CORRUGATED METAL PIPE
CO	CLEANOUT
CONC	CONCRETE
CONN	CONNECT
CONST	CONSTRUCTION
CONT	CONTINUOUS
CONV	CONVERTER
CP	CONTROL PANEL
CPT	CONTROL POWER TRANSFORMER
CT	CURRENT TRANSFORMER
CTR	CENTER
CU	CUBIC
CYL	CYLINDER
D	ISLAND
DAT	DATUM
DBL	DOUBLE
DCJ	DOWELED CONSTRUCTION JOINT
DCJT	DUMMY CONTROL JOINT
DEG	DEGREE
DEMO	DEMOLISH, DEMOLITION
DEPR	DEPRESSION
DET	DETAIL
DI	VAULT NETWORK INTERFACE
DIA	DIAMETER
DIM	DIMENSION
DISC	DISCONNECT
DIST	DISTRIBUTION
DIU	VAULT NETWORK INTERFACE UNIT
DIV	DIVISION
DN	DOWN
DOD	DEPARTMENT OF DEFENSE
DS	DISCONNECT SWITCH
DWG	DRAWING
DWLS	DOWELS
DWPJ	DOWELED WEAKENED PLANE JOINT
DWR	DRAWER
E	EAST
EA	EACH
EC	ELECTRICAL CONTRACTOR
ECH	ELECTRIC CABINET HEATER
EF	EXHAUST FAN
EJ	EXPANSION JOINT
EL	ELEVATION - GRADE OR BUILDING
EMERG	EMERGENCY
EMH	ELECTRIC MANHOLE
EMT	ELECTRICAL METALLIC TUBING (CONDUIT)
ENCL	ENCLOSURE
EP	EXPLOSION PROOF
EQ	EQUAL
EQUIP	EQUIPMENT
EST	ESTIMATE(D)
EUH	ELECTRIC UNIT HEATER
EW	EACH WAY
EX	EXISTING
EXP	EXPANSION
EXP BT	EXPANSION BOLT
EXP JT	EXPANSION JOINT
FAA	FEDERAL AVIATION ADMINISTRATION
FAAP	FIRE ALARM ANNUNCIATOR PANEL
FACP	FIRE ALARM CONTROL PANEL
FD	FIBER DRIVING
FH	FIRE HYDRANT OR FLASH HEAD
FJT	FLUSH JOINT
FLEX	FLEXIBLE
FLOLS	FRESNEL LENS OPTICAL LANDING SYSTEM
FOPP	FIBER OPTIC PATCH PANEL
FR	FIRE RESISTANT
FRE	FIBERGLASS REINFORCED EPOXY
FS	FAST INTERNET SWITCH AND PORT
FT	FEET
F/T	FEED/THROUGH
FU	FUSE
G	GAS
GALV	GALVANIZED
GEN	GENERAL
GFI	GROUND FAULT INTERRUPTER
GI	GALVANIZED IRON
GIP	GALVANIZED IRON PIPE
GND	GROUND
GOVT	GOVERNMENT
GPM	GALLONS PER MINUTE
GR	GRADE
GVL	GRAVEL
HH	HAND HOLE
HID	HIGH INTENSITY DISCHARGE
HORIZ	HORIZONTAL
HP	HORSE POWER
HPT	HIGH POINT
HS	HIGH STRENGTH
HYDR	HYDRAULIC
HZ	HERTZ
ID	INSIDE DIAMETER
IFLOLS	IMPROVED LENS OPTICAL LANDING SYSTEM
IG	ISOLATED GROUND
INCL	INCLUDE(ED)(ING)
IND	INDUSTRIAL
INV	INVERT
IP	IRON PIPE
J-BOX	JUNCTION BOX
JCT	JUNCTION
JF	JOINT FILLER
JT	JOINT
KOP	KNOCKOUT PANEL
KV	KILOVOLTS
KVA	KILOVOLT AMPERES
KVAR	KILOVOLT AMPERES REACTIVE
KW	KILOWATT
L	LENGTH
LA	LIGHTNING ARRESTOR
LBS	POUNDS
LC	LIGHTNING CONTACTOR
LPT	LOW POINT
LTG	LIGHTING
MAX	MAXIMUM
MCC	MOTOR CONTROL CENTER
MET	METAL
MFG	MANUFACTURING
MH	MANHOLE
MIN	MINIMUM
MISC	MISCELLANEOUS
MLO	MAIN LUG ONLY
mm	MILLIMETERS
MOA	MULTI-OUTLET ASSEMBLY
MOD	MOTOR OPERATED DAMPER
MS	MOTOR STARTER
MTD	MOUNTED
MPa	MEGAPASCALS
MV	MEDIUM VOLTAGE
MW	MONITORING WELL
N	NORTH
NA	NOT APPLICABLE/NO ACTION
NC	NORMALLY CLOSED
NEC	NATIONAL ELECTRICAL CODE
NFPA	NATIONAL FIRE PROTECTION ASSOCIATION
NO	NUMBER
NO	NORMALLY OPEN
NT	NETWORK TERMINATORS
NTS	NOT TO SCALE
OC	ON CENTER
OD	OUTSIDE DIAMETER
OH	OVERHEAD
OLS	OPTICAL LANDING SYSTEM
OPH	OPPOSITE HAND
ORIG	ORIGINAL
P	PARKING
PC	PRECAST CONCRETE
PCC	PORTLAND CEMENT CONCRETE
PCER	EXTENDER, RECEIVER
PCEX	EXTENDER, TRANSMITTER
PCU	POWER CONVERTER UNIT
PEC	PHOTO-ELECTRICALLY CONTROLLED RELAY
PG	PROFILE GRADE
PI	POINT OF INTERSECTION
PL	PLATE
PLYWD	PLYWOOD
PMT	PAD MOUNTED TRANSFORMER
PNL	PANEL
PSI	POUNDS PER SQUARE INCH
PT	POTENTIAL TRANSFORMER
PVC	POLYVINYL CHLORIDE
PVMT	PAVEMENT
QTY	QUANTITY
R	REMOVE
R/W	RUNWAY
RCP	REINFORCED CONCRETE PIPE
REBAR	REINFORCING BAR
RECP	RECEPTACLES
REQD	REQUIRED
RGL	RUNWAY GUARD LIGHT
RGS	RIGID GALVANIZED STEEL
RVAT	REDUCED VOLTAGE AUTOTRANSFORMER
RVSS	REDUCED VOLTAGE SOLID STATE
S	SOUTH
SC	SURGE CAPACITOR
SCH	1-SLOT CHASSIS
SCHED	SCHEDULE
SD	STORM DRAIN
SHT	SHEET
SPD	SURGE PROTECTION DEVICE
SPEC	SPECIFICATIONS
SPKR	SPEAKER FOR COMPUTER
SQ	SQUARE
SSJ	SLEEPER SLAB JOINT
STD	STANDARD
STL	STEEL
SW	SWITCH
SWBD	SWITCHBOARD
T	NETWORK TERMINATOR
T&B	TOP AND BOTTOM
T/W	TAXIWAY
TBD	TO BE DETERMINED
TC	CABLE TRAY-CABLE
TE	THICKENED EDGE
TEMP	TEMPORARY
TRANS	TRANSITION OR TRANSFORMER
TTB	TELEPHONE TERMINAL BOARD
TTC	TELEPHONE TERMINAL CABINET
TYP	TYPICAL
UFC	UNITED FACILITIES CRITERIA
UH	UNIT HEATER
UIP	USE IN PLACE
UL	UNDERWRITER LABORATORIES
UON	UNLESS OTHERWISE NOTED
UPS	UNINTERRUPTIBLE POWER SUPPLY
UTIL	UTILITY
V	VOLT
VAR	VARIABLE, VARIES
VAULT	AIRFIELD ELECTRICAL ROOM
VIF	VERIFY IN FIELD
VERT	VERTICAL
VS	VOLTMETER SELECTOR SWITCH
W	WATT, WEST, WIRE
W/	WITH
W/O	WITHOUT
WP	WEATHERPROOF
WPJ	WEAKENED PLANE JOINT
WT	WEIGHT
WV	WATER VALVE
XFMR	TRANSFORMER
YDS	YARDS
1-PH	SINGLE PHASE
3-PH	THREE PHASE
5R/23L	RUNWAY DESIGNATION EXAMPLE: 5 RIGHT - 32 LEFT

AIRFIELD LIGHT FIXTURE COLOR LEGEND:

"B" INDICATES BLANK (NO LIGHT OUTPUT)

"G" INDICATES GREEN LENS COLOR

"R" INDICATES RED LENS COLOR

"W" INDICATES WHITE LENS COLOR

"Y" INDICATES YELLOW LENS COLOR

TYPICAL AIRFIELD LIGHTING CONSTRUCTION CALLOUT:

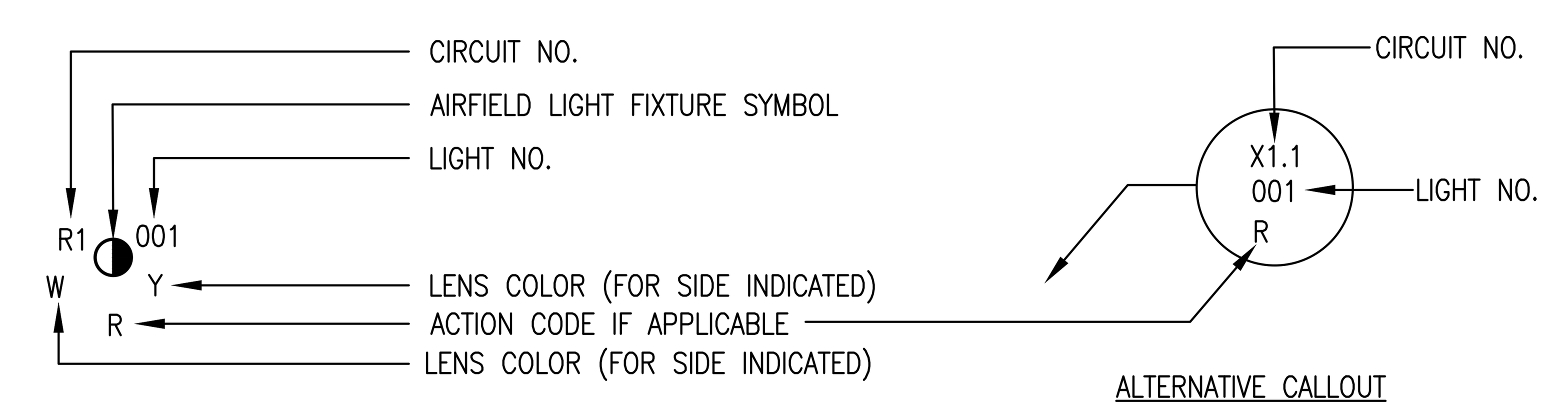

REFER TO LIGHTING SCHEDULES ON SHEETS EA001 TO EA603

ACTION CODES

R - DEMOLISH
RS - REMOVE AND STORE FOR RE-INSTALATION

TYPICAL AIRFIELD SIGNAGE CONSTRUCTION CALLOUT:

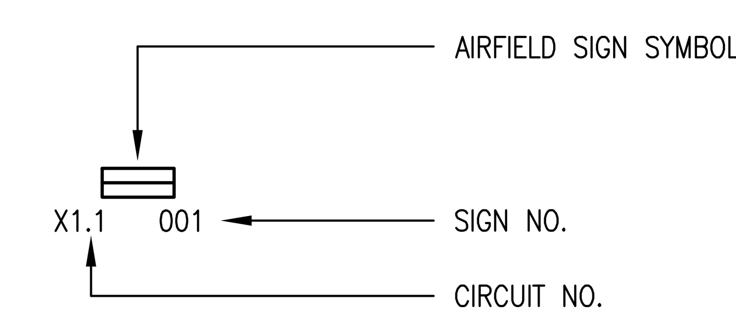

GENERAL:

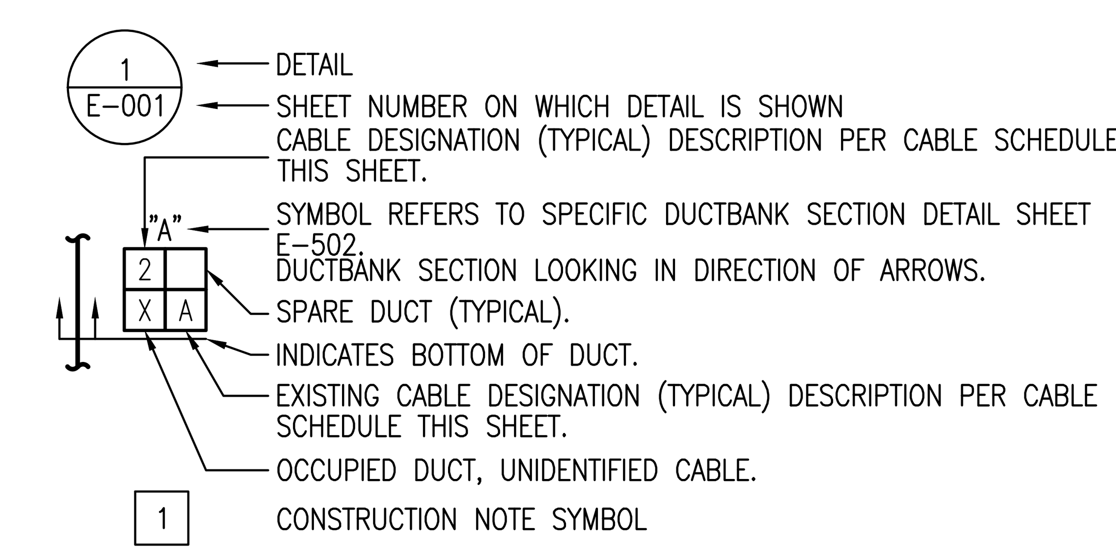

CABLE SCHEDULE

CABLE ID.		DESCRIPTION	CABLE TYPE	CONDUIT SIZE	REMARKS
EXIST	NEW				
A		FIBER OPTIC CABLE		4"C	FIBER OPTIC CABLES FOR LIGHTING CONTROL TO REMAIN
	1	(1) 1/C #6, 5KV	150/5345-7, TYPE L-824-C	2"C	SERIES LIGHTING CIRCUIT, CONSTANT CURRENT SERIES LIGHTING CIRCUIT
	2	(2) 1/C #6, 5KV	150/5345-7, TYPE L-824-C	2"C	SERIES LIGHTING CIRCUIT, CONSTANT CURRENT SERIES LIGHTING CIRCUIT

SYM	DESCRIPTION	DATE	APPR

Professional Certification
I HEREBY CERTIFY THAT THESE DOCUMENTS WERE PREPARED OR APPROVED BY ME, AND THAT I AM A DULY LICENSED PROFESSIONAL ENGINEER UNDER THE LAWS OF THE STATE OF MARYLAND, LICENSE NO. 24789, EXPIRATION DATE: 07/05/17.
SEAL

JOHNSON, MIRMIRAN & THOMPSON
Gannett Fleming
A Joint Venture
272 Bendix Road, Suite 260
Virginia Beach, Virginia, 23452
Telephone: (757) 499-1895
Web: www.jmt.com
A/E INFO

APPROVED

FOR COMMANDER NAVFAC

ACTIVITY

JAMES FLETCHER PER CHECKLIST
SATISFACTORY TO DATE 9/27/2016

DES RCH DRW RCH CHK DJP
PM/DM RH
BRANCH MANAGER
CHIEF ENG/ARCH E. GALLAHER, PE

DEPARTMENT OF THE NAVY
NAVAL FACILITIES ENGINEERING COMMAND
NAVFAC WASHINGTON
WASHINGTON, D.C.
IPT BLUE
NAVAL AIR STATION PATUXENT RIVER PATUXENT RIVER, MARYLAND
FY16 SPECIAL PROJECT RM12-2137
REPAIR RUNWAYS 14-32 & 6-24 - PHASE 3
ELECTRICAL CONSTRUCTION LEGEND AND ABBREVIATIONS

SCALE: AS NOTED
EPROJECT NO.: 1382138
CONSTR. CONTR. NO. N40080-17-R-0002
NAVFAC DRAWING NO. 13080239
SHEET 181 OF 206

EA002

DRAWFORM REVISION: 10 MARCH 2009

GRAPHIC SCALE

1"=800' 0 800' 1600' 3200'

SYM	DESCRIPTION	DATE	APPR

NAVFAC

STATE OF MARYLAND — JONATHAN D. SHERIDAN — No. 24789 — PROFESSIONAL ENGINEER

Professional Certification

I HEREBY CERTIFY THAT THESE DOCUMENTS WERE PREPARED OR APPROVED BY ME, AND THAT I AM A DULY LICENSED PROFESSIONAL ENGINEER UNDER THE LAWS OF THE STATE OF MARYLAND, LICENSE NO. 24789, EXPIRATION DATE: 07/06/17.

SEAL

JOHNSON, MIRMIRAN & THOMPSON
Gannett Fleming
A Joint Venture
272 Bendix Road, Suite 260
Virginia Beach, Virginia, 23452
Telephone: (757) 499-1895
Web: www.jmt.com

A/E INFO

APPROVED

FOR COMMANDER NAVFAC

ACTIVITY

JAMES FLETCHER PER CHECKLIST
SATISFACTORY TO DATE 9/27/2016

DES: VALUE DRW: VALUE CHK: VALUE

PM/DM: RH

BRANCH MANAGER

CHIEF ENG/ARCH: E. GALLAHER, PE

DEPARTMENT OF THE NAVY
NAVAL FACILITIES ENGINEERING COMMAND
WASHINGTON, D.C.

NAVFAC WASHINGTON

NAVAL AIR STATION PATUXENT RIVER
PATUXENT RIVER, MARYLAND

FY16 SPECIAL PROJECT RM12-2137
REPAIR RUNWAYS 14-32 & 6-24 - PHASE 3

OVERALL SITE PLAN – CONSTRUCTION

PT. BLUE

SCALE: AS NOTED

EPROJECT NO.: 1382138

CONSTR. CONTR. NO. N40080-17-R-0002

NAVFAC DRAWING NO. 13080240

SHEET 182 OF 206

EA100

DRAWFORM REVISION: 10 MARCH 2009

FILE NAME: G:\PHPA\100863_009_FY16_Repair_Runways_\CADD\Phase 3\Electrical_Phase 3\10-0863-009-EA100.dwg LAYOUT NAME: EA100 OVERALL SITE PLAN - CONSTRUCTION PLOTTED: Tuesday, September 27, 2016 - 3:56pm USER: rhurst

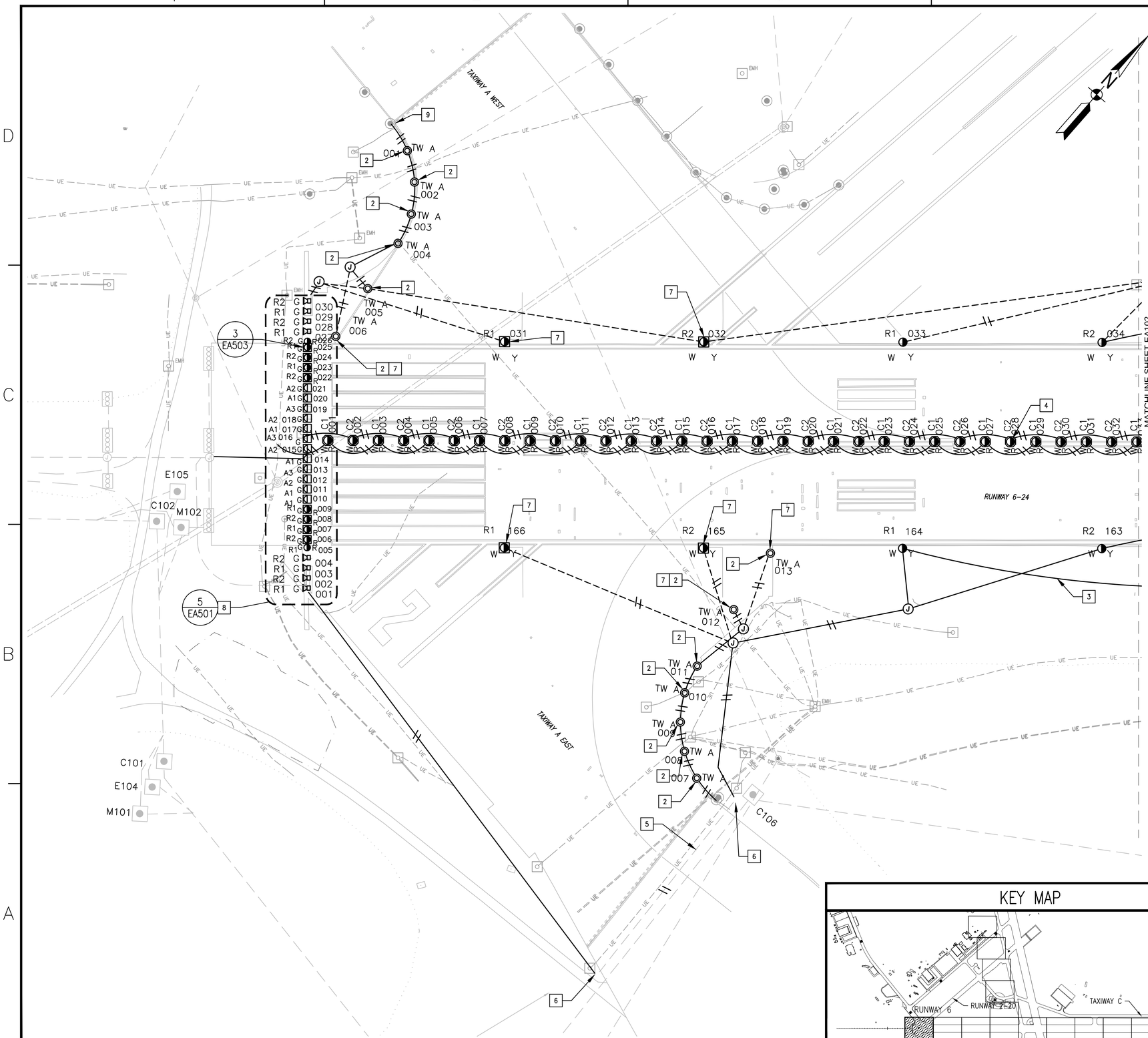

CONSTRUCTION NOTES

1. INSTALL RUNWAY DISTANCE MARKER 75 FEET FROM RUNWAY 6–24 EDGE.
2. RE–INSTALL STORED TAXIWAY EDGE LIGHT AND ISOLATION TRANSFORMER.
3. THE TWO RUNWAY EDGE LIGHT CIRCUITS ARE TO BE INTERLEAVED IN SEPARATE CONDUITS. REFER TO INTERLEAVED RUNWAY CIRCUIT SCHEMATIC, DETAIL 1, SHEET EA601.
4. THE TWO RUNWAY CENTERLINE LIGHT CIRCUITS ARE TO BE INTERLEAVED IN SEPARATE CONDUITS. REFER TO INTERLEAVED RUNWAY CIRCUIT SCHEMATIC, DETAIL 1, SHEET EA601.
5. ROUTE RUNWAY CIRCUIT CONDUCTORS IN EXISTING JUNCTION CAN AND CONDUIT.
6. CONNECT CONDUIT TO EXISTING JUNCTION CAN,
7. LIGHTS IN PCC PAVEMENT SHALL BE INSTALLED BY PARTIAL SLAB REPLACMENT, REFER TO PLAN SHEET C–401 AND DETAIL SHEET C–515 AND DETAIL 4, SHEET EA503.
8. REFER TO DETAIL 5, SHEET EA501 FOR THRESHOLD WIRING DIAGRAM.
9. CONNECT CONDUIT TO EXISTING, SPLICE L–824 CABLES TO EXISTING CIRCUIT IN LIGHT CAN.

CONSTRUCTION LEGEND

//	2" PVC SCHEDULE 40 CONDUIT WITH #6 AWG CABLE AND #4 COPPER COUNTERPOISE, NUMBER OF HASH MARKS INDICATE THE NUMBER OF #6 CABLES AND CONDUITS.	1 EA504
-//-	2" DIRECTIONALLY DRILLED HDPE CONDUIT WITH #6 AWG CABLE AND #4 COPPER COUNTERPOISE, NUMBER OF HASH MARKS INDICATE THE NUMBER OF #6 CABLES	
R1 097 W W	FAA L–862 BI–DIRECTIONAL ELEVATED HIGH INTENSITY RUNWAY EDGE LIGHT, WHITE/WHITE LENS COLOR, CIRCUIT AND FIXTURE NUMBER AS INDICATED	1 EA501
R2 001 W Y	FAA L–862 BI–DIRECTIONAL ELEVATED HIGH INTENSITY RUNWAY EDGE LIGHT, WHITE/YELLOW LENS COLOR, CIRCUIT AND FIXTURE NUMBER AS INDICATED	1 EA501
R1 045 W W	FAA L–850C BI–DIRECTIONAL IN–PAVEMENT HIGH INTENSITY RUNWAY EDGE LIGHT, WHITE/WHITE LENS COLOR, CIRCUIT AND FIXTURE NUMBER AS INDICATED	2 EA502
R2 001 W Y	FAA L–850C (RUNWAY) OR L–850D (THRESHOLD) BI–DIRECTIONAL IN–PAVEMENT HIGH INTENSITY EDGE LIGHT, WHITE/YELLOW OR GREEN/RED LENS COLOR, CIRCUIT AND FIXTURE NUMBER AS INDICATED	2 EA502
C2 201 W W	L–852N (NAVY) BI–DIRECTIONAL IN–PAVEMENT HIGH INTENSITY RUNWAY CENTERLINE LIGHT, WHITE/WHITE LENS COLOR, CIRCUIT AND FIXTURE NUMBER AS INDICATED	2 EA502
C1 054 W R	L–852N (NAVY) BI–DIRECTIONAL IN–PAVEMENT HIGH INTENSITY RUNWAY CENTERLINE LIGHT, WHITE/RED LENS COLOR, CIRCUIT AND FIXTURE NUMBER AS INDICATED	2 EA502
R2 166	FAA L–858 LIGHTED RUNWAY DISTANCE MARKER, CIRCUIT AND FIXTURE NUMBER AS INDICATED	1 EA503
R1 150 G R	FAA L–862 BI–DIRECTIONAL ELEVATED HIGH INTENSITY THRESHOLD LIGHT, GREEN/RED LENS COLOR, CIRCUIT AND FIXTURE NUMBER AS INDICATED	1 EA501
A1 149 G	FAA L–850E BI–DIRECTIONAL IN–PAVEMENT HIGH INTENSITY THRESHOLD LIGHT, GREEN/RED LENS COLOR, CIRCUIT AND FIXTURE NUMBER AS INDICATED	2 EA502
R1 001 G	FAA–E–982, 500W, PAR 56, OUTBOARD THRESHOLD LIGHT, GREEN LENS COLOR, CIRCUIT AND FIXTURE NUMBER AS INDICATED	2 EA504
TW A	RE–INSTALL OR PROVIDE, AS NOTED, L–861T, TAXIWAY EDGE LIGHT WITH BLUE LENS, CIRCUIT NUMBER AS INDICATED.	1 EA501
J	L–867 SIZE D JUNCTION CAN	3 EA502

KEY MAP

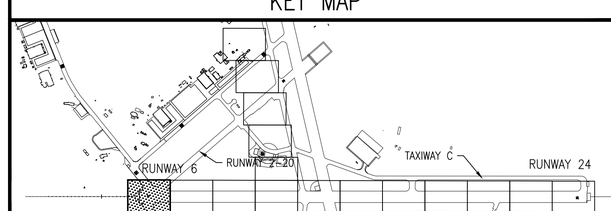

GRAPHIC SCALE

1"=50' 0 50' 100' 200'

SYM	DESCRIPTION	DATE	APPR

NAVFAC

Professional Certification
I HEREBY CERTIFY THAT THESE DOCUMENTS WERE PREPARED OR APPROVED BY ME, AND THAT I AM A DULY LICENSED PROFESSIONAL ENGINEER UNDER THE LAWS OF THE STATE OF MARYLAND, LICENSE NO. 24789, EXPIRATION DATE: 07/06/17.
SEAL

JOHNSON, MIRMIRAN & THOMPSON
Gannett Fleming
A Joint Venture
272 Bendix Road, Suite 260
Virginia Beach, Virginia, 23452
Telephone: (757) 499–1895
Web: www.jmt.com
A/E INFO

APPROVED
FOR COMMANDER NAVFAC
ACTIVITY
JAMES FLETCHER PER CHECKLIST
SATISFACTORY TO DATE 9/27/2016
DES. RCH DRW RCH CHK DJP
PM/DM RH
BRANCH MANAGER
CHIEF ENG/ARCH E. GALLAHER, PE

DEPARTMENT OF THE NAVY
NAVAL FACILITIES ENGINEERING COMMAND
WASHINGTON, D.C.
NAVFAC WASHINGTON
NAVAL AIR STATION PATUXENT RIVER
PATUXENT RIVER, MARYLAND
FY16 SPECIAL PROJECT RM12-2137
REPAIR RUNWAYS 14-32 & 6-24 - PHASE 3
PARTIAL SITE PLAN – CONSTRUCTION
PT BLUE

SCALE: AS NOTED
EPROJECT NO.: 1382138
CONSTR. CONTR. NO. N40080–17–R–0002
NAVFAC DRAWING NO. 13080241
SHEET 183 OF 206
EA101
DRAWFORM REVISION: 10 MARCH 2009

FILE NAME: G:\PHPA\100863_009_FY16_Repair_Runways_1\CADD\Phase 3\Electrical_Phase 3\10-0863-009-EA101.dwg LAYOUT NAME: EA101 PARTIAL SITE PLAN - CONSTRUCTION PLOTTED: Tuesday, September 27, 2016 - 3:57pm USER: rhurst

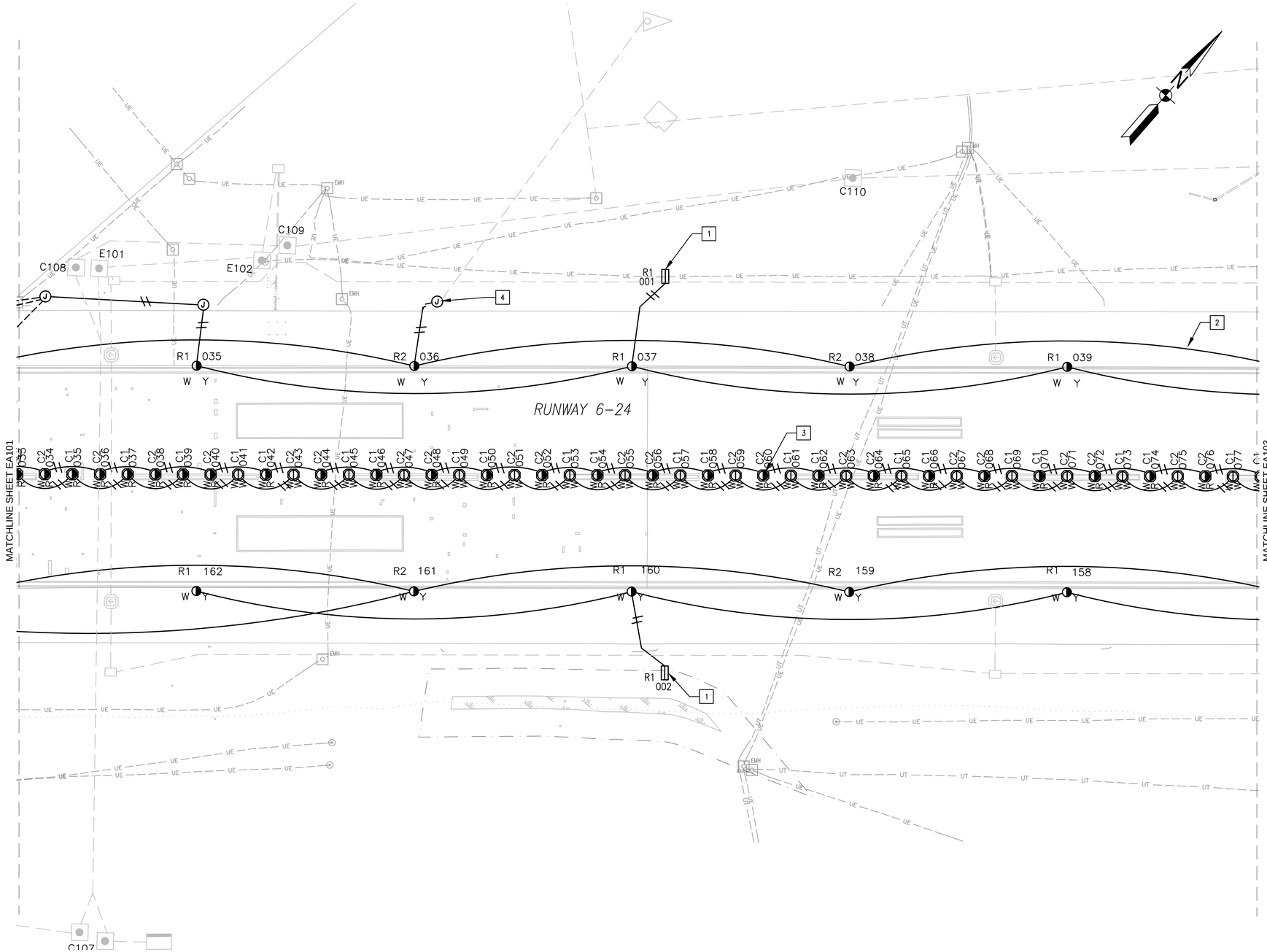

CONSTRUCTION NOTES

1. INSTALL RUNWAY DISTANCE MARKER 75 FEET FROM RUNWAY 6-24 EDGE.
2. THE TWO RUNWAY EDGE LIGHT CIRCUITS ARE TO BE INTERLEAVED IN SEPARATE CONDUITS. REFER TO INTERLEAVED RUNWAY CIRCUIT SCHEMATIC, DETAIL 1, SHEET EA601.
3. THE TWO RUNWAY CENTERLINE LIGHT CIRCUITS ARE TO BE INTERLEAVED IN SEPARATE CONDUITS. REFER TO INTERLEAVED RUNWAY CIRCUIT SCHEMATIC, DETAIL 1, SHEET EA601.
4. INSTALL TYPE D JUNCTION BOX AND WIRE WINDCONE INTO RUNWAY EDGE CIRCUIT.

CONSTRUCTION LEGEND

2" PVC SCHEDULE 40 CONDUIT WITH #6 AWG CABLE AND #4 COPPER COUNTERPOISE, NUMBER OF HASH MARKS INDICATE THE NUMBER OF #6 CABLES AND CONDUITS.	1 / EA504
2" DIRECTIONALLY DRILLED HDPE CONDUIT WITH #6 AWG CABLE AND #4 COPPER COUNTERPOISE, NUMBER OF HASH MARKS INDICATE THE NUMBER OF #6 CABLES	
R1 097 W W — FAA L-862 BI-DIRECTIONAL ELEVATED HIGH INTENSITY RUNWAY EDGE LIGHT, WHITE/WHITE LENS COLOR, CIRCUIT AND FIXTURE NUMBER AS INDICATED	1 / EA501
R2 001 W Y — FAA L-862 BI-DIRECTIONAL ELEVATED HIGH INTENSITY RUNWAY EDGE LIGHT, WHITE/YELLOW LENS COLOR, CIRCUIT AND FIXTURE NUMBER AS INDICATED	1 / EA501
R1 045 W W — FAA L-850C BI-DIRECTIONAL IN-PAVEMENT HIGH INTENSITY RUNWAY EDGE LIGHT, WHITE/WHITE LENS COLOR, CIRCUIT AND FIXTURE NUMBER AS INDICATED	2 / EA502
R2 001 W Y — FAA L-850C (RUNWAY) OR L-850D (THRESHOLD) BI-DIRECTIONAL IN-PAVEMENT HIGH INTENSITY EDGE LIGHT, WHITE/YELLOW OR GREEN/RED LENS COLOR, CIRCUIT AND FIXTURE NUMBER AS INDICATED	2 / EA502
C2 201 W W — L-852N (NAVY) BI-DIRECTIONAL IN-PAVEMENT HIGH INTENSITY RUNWAY CENTERLINE LIGHT, WHITE/WHITE LENS COLOR, CIRCUIT AND FIXTURE NUMBER AS INDICATED	2 / EA502
C1 054 W R — L-852N (NAVY) BI-DIRECTIONAL IN-PAVEMENT HIGH INTENSITY RUNWAY CENTERLINE LIGHT, WHITE/RED LENS COLOR, CIRCUIT AND FIXTURE NUMBER AS INDICATED	2 / EA502
R2 166 — FAA L-858 LIGHTED RUNWAY DISTANCE MARKER, CIRCUIT AND FIXTURE NUMBER AS INDICATED	1 / EA503
(J) L-867 SIZE D JUNCTION CAN	3 / EA502

KEY MAP

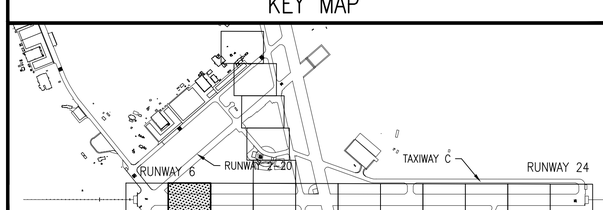

GRAPHIC SCALE

1"=50' 0 50' 100' 200'

SYM	DESCRIPTION	DATE	APPR

NAVFAC

Professional Certification
I HEREBY CERTIFY THAT THESE DOCUMENTS WERE PREPARED OR APPROVED BY ME, AND THAT I AM A DULY LICENSED PROFESSIONAL ENGINEER UNDER THE LAWS OF THE STATE OF MARYLAND, LICENSE NO. 24789.
EXPIRATION DATE: 07/05/17.
SEAL

JOHNSON, MIRMIRAN & THOMPSON
Gannett Fleming
A Joint Venture
272 Bendix Road, Suite 260
Virginia Beach, Virginia, 23452
Telephone: (757) 499-1895
Web: www.jmt.com

A/E INFO

APPROVED
FOR COMMANDER NAVFAC
ACTIVITY
JAMES FLETCHER PER CHECKLIST
SATISFACTORY TO DATE 9/27/2016
DES RCH DRW RCH CHK DJP
PM/DM RH
BRANCH MANAGER
CHIEF ENG/ARCH E. GALLAHER, PE

DEPARTMENT OF THE NAVY
NAVAL AIR STATION PATUXENT RIVER
PT. BLUE
NAVAL FACILITIES ENGINEERING COMMAND
WASHINGTON, D.C.
NAVFAC WASHINGTON
PATUXENT RIVER, MARYLAND
FY16 SPECIAL PROJECT RM12-2137
REPAIR RUNWAYS 14-32 & 6-24 - PHASE 3
PARTIAL SITE PLAN - CONSTRUCTION

SCALE: AS NOTED
EPROJECT NO.: 1382138
CONSTR. CONTR. NO. N40080-17-R-0002
NAVFAC DRAWING NO. 13080242
SHEET 184 OF 206
EA102

DRAWFORM REVISION: 10 MARCH 2009

FILE NAME: G:\PHPA\100863_009_FY16_Repair_Runways_\CADD\Phase 3\Electrical_Phase 3\10-0863-009-EA102.dwg LAYOUT NAME: EA102 PARTIAL SITE PLAN - CONSTRUCTION PLOTTED: Tuesday, September 27, 2016 - 3:58pm USER: rhurst

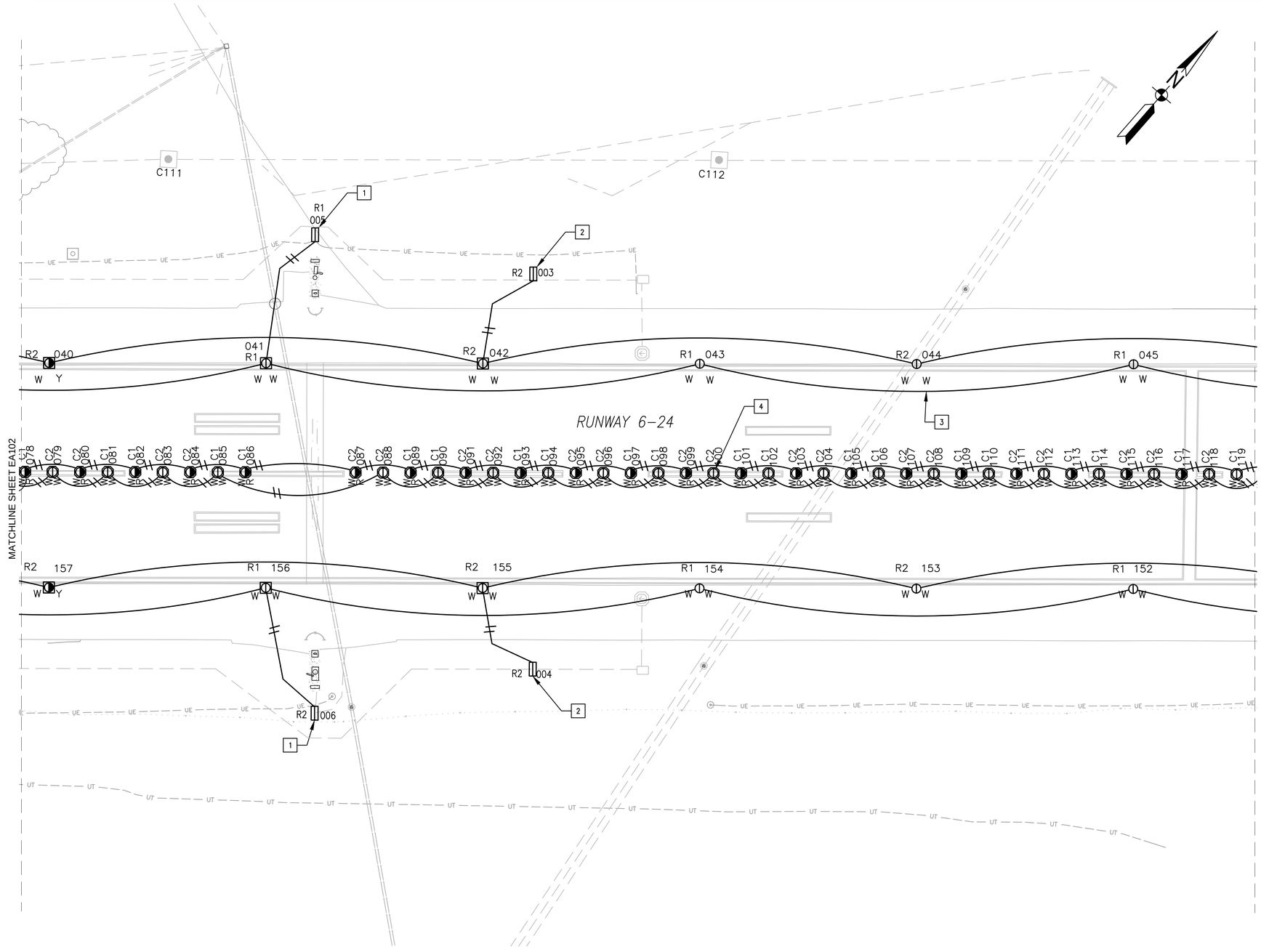

CONSTRUCTION NOTES

1. INSTALL ARRESTING GEAR MARKER 100 FEET FROM RUNWAY 6-24 EDGE.

   THE INSTALLATION OF THE MARKERS AND MARKINGS SHALL BE AS FOLLOWS:
   A. THE BASES OF THE ARRESTING GEAR MARKERS SHALL BE NOT LESS THAN 6 INCHES ABOVE THE GROUND.
   B. THE TOP OF THE MARKER SHALL BE NOT MORE THAN 57 ±3 INCHES ABOVE THE NEAR RUNWAY EDGE AT THE POSITION.
   C. THE AXES OF THE MARKERS SHALL BE AT RIGHT ANGLES ±2 DEGREES TO THE RUNWAY CENTERLINE AND ALONG THE LINES CONNECTING THE PAIRS OF MARKERS.
   D. INDIVIDUAL MARKERS MAY HAVE A 1-FOOT TOLERANCE FROM THE LINE ALONG THE DECK PENDANT.
   E. THE FACES OF THE SIGNS SHALL BE VERTICAL ±2 DEGREES.

2. INSTALL RUNWAY DISTANCE MARKER 75 FEET FROM RUNWAY 6-24 EDGE.

3. THE TWO RUNWAY EDGE LIGHT CIRCUITS ARE TO BE INTERLEAVED IN SEPARATE CONDUITS. REFER TO INTERLEAVED RUNWAY CIRCUIT SCHEMATIC, DETAIL 1, SHEET EA601.

4. THE TWO RUNWAY CENTERLINE LIGHT CIRCUITS ARE TO BE INTERLEAVED IN SEPARATE CONDUITS. REFER TO INTERLEAVED RUNWAY CIRCUIT SCHEMATIC, DETAIL 1, SHEET EA601.

CONSTRUCTION LEGEND

//	2" PVC SCHEDULE 40 CONDUIT WITH #6 AWG CABLE AND #4 COPPER COUNTERPOISE, NUMBER OF HASH MARKS INDICATE THE NUMBER OF #6 CABLES AND CONDUITS.	1 / EA504
R1 097 W W	FAA L-862 BI-DIRECTIONAL ELEVATED HIGH INTENSITY RUNWAY EDGE LIGHT, WHITE/WHITE LENS COLOR, CIRCUIT AND FIXTURE NUMBER AS INDICATED	1 / EA501
R2 001 W Y	FAA L-862 BI-DIRECTIONAL ELEVATED HIGH INTENSITY RUNWAY EDGE LIGHT, WHITE/YELLOW LENS COLOR, CIRCUIT AND FIXTURE NUMBER AS INDICATED	1 / EA501
R1 045 W W	FAA L-850C BI-DIRECTIONAL IN-PAVEMENT HIGH INTENSITY RUNWAY EDGE LIGHT, WHITE/WHITE LENS COLOR, CIRCUIT AND FIXTURE NUMBER AS INDICATED	2 / EA502
R2 001 W Y	FAA L-850C (RUNWAY) OR L-850D (THRESHOLD) BI-DIRECTIONAL IN-PAVEMENT HIGH INTENSITY EDGE LIGHT, WHITE/YELLOW OR GREEN/RED LENS COLOR, CIRCUIT AND FIXTURE NUMBER AS INDICATED	2 / EA502
C2 201 W W	L-852N (NAVY) BI-DIRECTIONAL IN-PAVEMENT HIGH INTENSITY RUNWAY CENTERLINE LIGHT, WHITE/WHITE LENS COLOR, CIRCUIT AND FIXTURE NUMBER AS INDICATED	2 / EA502
C1 054 W R	L-852N (NAVY) BI-DIRECTIONAL IN-PAVEMENT HIGH INTENSITY RUNWAY CENTERLINE LIGHT, WHITE/RED LENS COLOR, CIRCUIT AND FIXTURE NUMBER AS INDICATED	2 / EA502
R2 166	FAA L-858 LIGHTED RUNWAY DISTANCE MARKER, CIRCUIT AND FIXTURE NUMBER AS INDICATED	1 / EA503

KEY MAP

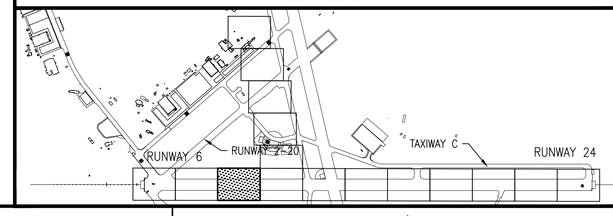

GRAPHIC SCALE

1"=50' 0 50' 100' 200'

SYM	DESCRIPTION	DATE	APPR

NAVFAC

Professional Certification
I HEREBY CERTIFY THAT THESE DOCUMENTS WERE PREPARED OR APPROVED BY ME, AND THAT I AM A DULY LICENSED PROFESSIONAL ENGINEER UNDER THE LAWS OF THE STATE OF MARYLAND, LICENSE NO. 24789, EXPIRATION DATE: 07/05/17.
SEAL

JOHNSON, MIRMIRAN & THOMPSON
Gannett Fleming
A Joint Venture
272 Bendix Road, Suite 260
Virginia Beach, Virginia, 23452
Telephone: (757) 499-1895
Web: www.jmt.com

A/E INFO

APPROVED
FOR COMMANDER NAVFAC

ACTIVITY
JAMES FLETCHER PER CHECKLIST
SATISFACTORY TO DATE 9/27/2016

DES RCH | DRW RCH | CHK DJP
PM/DM RH
BRANCH MANAGER
CHIEF ENG/ARCH E. GALLAHER, PE

DEPARTMENT OF THE NAVY
NAVAL FACILITIES ENGINEERING COMMAND
WASHINGTON, D.C.
NAVFAC WASHINGTON
NAVAL AIR STATION PATUXENT RIVER
PATUXENT RIVER, MARYLAND
IPT BLUE

FY16 SPECIAL PROJECT RM12-2137
REPAIR RUNWAYS 14-32 & 6-24 - PHASE 3

PARTIAL SITE PLAN – CONSTRUCTION

SCALE: AS NOTED
EPROJECT NO.: 1382138
CONSTR. CONTR. NO.: N40080-17-R-0002
NAVFAC DRAWING NO.: 13080243
SHEET 185 OF 206

EA103

DRAWFORM REVISION: 10 MARCH 2009

FILE NAME: G:\PHPA\100863_009_FY16_Repair_Runways_\CADD\Phase 3\Electrical_Phase 3\10-0863-009-EA103.dwg LAYOUT NAME: EA103 PARTIAL SITE PLAN – CONSTRUCTION PLOTTED: Tuesday, September 27, 2016 – 3:58pm USER: rhurst

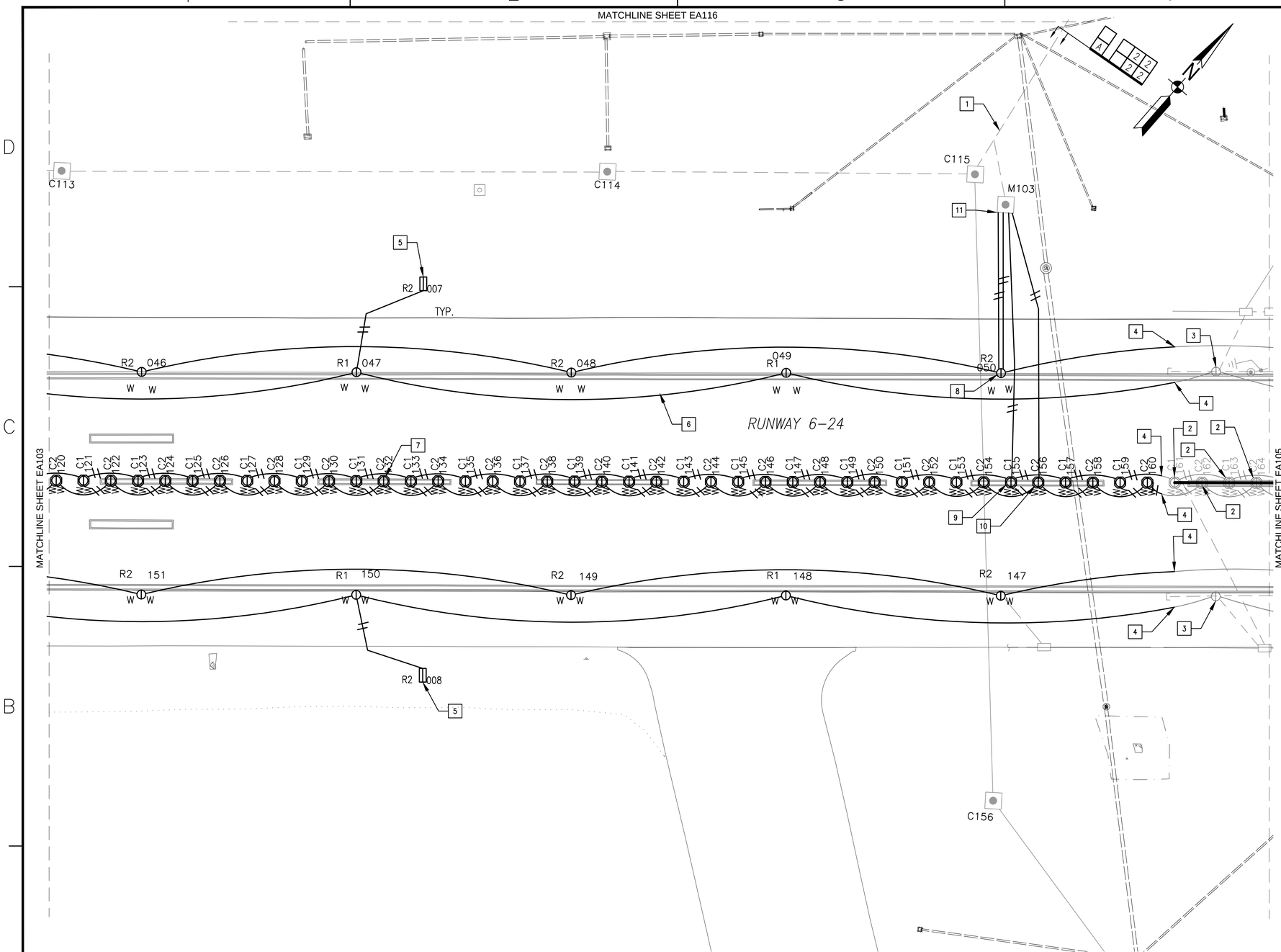

CONSTRUCTION NOTES

1. ROUTE RUNWAY EDGE AND CENTERLINE LIGHT CIRCUIT CONDUCTORS IN EXISTING AIRFIELD LIGHTING DUCTS.
2. EXISTING RUNWAY 6-24 CENTERLINE LIGHT TO REMAIN.
3. EXISTING RUNWAY 6-24 EDGE LIGHT TO REMAIN.
4. CONNECT CONDUIT TO EXISTING. ROUTE LIGHTING CABLES TO EXISTING LIGHT AND SPLICE INTO EXISTING CIRCUIT CONDUCTORS. VERIFY EXISTING CIRCUIT INTERLEAVING FOR CONSISTENT INTERLEAVE.
5. INSTALL RUNWAY DISTANCE MARKER 75 FEET FROM RUNWAY 6-24 EDGE.
6. THE TWO RUNWAY EDGE LIGHT CIRCUITS ARE TO BE INTERLEAVED IN SEPARATE CONDUITS. REFER TO INTERLEAVED RUNWAY CIRCUIT SCHEMATIC, DETAIL 1, SHEET EA601.
7. THE TWO RUNWAY CENTERLINE LIGHT CIRCUITS ARE TO BE INTERLEAVED IN SEPARATE CONDUITS. REFER TO INTERLEAVED RUNWAY CIRCUIT SCHEMATIC, DETAIL 1, SHEET EA601.
8. SPLICE HOME RUN CIRCUIT R2 IN FIXTURE R2 050 AND ROUTE HOME RUN CIRCUIT R1 TO ADJACENT LIGHT FIXTURES.
9. SPLICE HOME RUN CIRCUIT C1 IN FIXTURE C1 155.
10. SPLICE HOME RUN CIRCUIT C2 IN FIXTURE C2 156.
11. EXOTHERMICALLY WELD ALL COUNTERPOISE WIRES TO EXISTING COUNTERPOISE WIRES AT MANHOLE.

CONSTRUCTION LEGEND

- 2" PVC SCHEDULE 40 CONDUIT WITH #6 AWG CABLE AND #4 COPPER COUNTERPOISE, NUMBER OF HASH MARKS INDICATE THE NUMBER OF #6 CABLES AND CONDUITS. — 1 / EA504
- R1 097 — W W — FAA L-862 BI-DIRECTIONAL ELEVATED HIGH INTENSITY RUNWAY EDGE LIGHT, WHITE/WHITE LENS COLOR, CIRCUIT AND FIXTURE NUMBER AS INDICATED — 1 / EA501
- R2 001 — W Y — FAA L-862 BI-DIRECTIONAL ELEVATED HIGH INTENSITY RUNWAY EDGE LIGHT, WHITE/YELLOW LENS COLOR, CIRCUIT AND FIXTURE NUMBER AS INDICATED — 1 / EA501
- R1 045 — W W — FAA L-850C BI-DIRECTIONAL IN-PAVEMENT HIGH INTENSITY RUNWAY EDGE LIGHT, WHITE/WHITE LENS COLOR, CIRCUIT AND FIXTURE NUMBER AS INDICATED — 2 / EA502
- R2 001 — W Y — FAA L-850C (RUNWAY) OR L-850D (THRESHOLD) BI-DIRECTIONAL IN-PAVEMENT HIGH INTENSITY EDGE LIGHT, WHITE/YELLOW OR GREEN/RED LENS COLOR, CIRCUIT AND FIXTURE NUMBER AS INDICATED — 2 / EA502
- C2 201 — W W — L-852N (NAVY) BI-DIRECTIONAL IN-PAVEMENT HIGH INTENSITY RUNWAY CENTERLINE LIGHT, WHITE/WHITE LENS COLOR, CIRCUIT AND FIXTURE NUMBER AS INDICATED — 2 / EA502
- C1 054 — W R — L-852N (NAVY) BI-DIRECTIONAL IN-PAVEMENT HIGH INTENSITY RUNWAY CENTERLINE LIGHT, WHITE/RED LENS COLOR, CIRCUIT AND FIXTURE NUMBER AS INDICATED — 2 / EA502
- R2 166 — FAA L-858 LIGHTED RUNWAY DISTANCE MARKER, CIRCUIT AND FIXTURE NUMBER AS INDICATED — 1 / EA503

KEY MAP

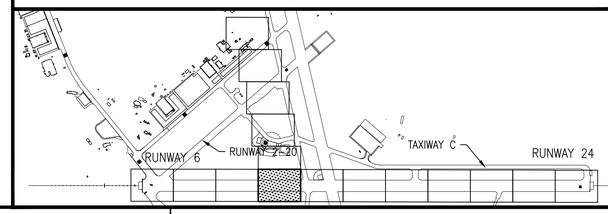

GRAPHIC SCALE

1"=50' 0 50' 100' 200'

SYM	DESCRIPTION	DATE	APPR

NAVFAC

Professional Certification
I HEREBY CERTIFY THAT THESE DOCUMENTS WERE PREPARED OR APPROVED BY ME, AND THAT I AM A DULY LICENSED PROFESSIONAL ENGINEER UNDER THE LAWS OF THE STATE OF MARYLAND, LICENSE NO. 24789.
EXPIRATION DATE: 07/05/17.
SEAL

JOHNSON, MIRMIRAN & THOMPSON
Gannett Fleming
A Joint Venture
272 Bendix Road, Suite 260
Virginia Beach, Virginia, 23452
Telephone: (757) 499-1895
Web: www.jmt.com

A/E INFO

APPROVED
FOR COMMANDER NAVFAC
ACTIVITY
JAMES FLETCHER PER CHECKLIST
SATISFACTORY TO DATE 9/27/2016
DES. RCH DRW RCH CHK DJP
PM/DM RH
BRANCH MANAGER
CHIEF ENG/ARCH E. GALLAHER, PE

DEPARTMENT OF THE NAVY
NAVAL FACILITIES ENGINEERING COMMAND WASHINGTON, D.C.
NAVFAC WASHINGTON
NAVAL AIR STATION PATUXENT RIVER
PATUXENT RIVER, MARYLAND
IPT BLUE

FY16 SPECIAL PROJECT RM12-2137
REPAIR RUNWAYS 14-32 & 6-24 - PHASE 3

PARTIAL SITE PLAN - CONSTRUCTION

SCALE: AS NOTED
EPROJECT NO.: 1382138
CONSTR. CONTR. NO. N40080-17-R-0002
NAVFAC DRAWING NO. 13080244
SHEET 186 OF 206

EA104

DRAWFORM REVISION: 10 MARCH 2009

FILE NAME: C:\PHPA\100863_009_FY16_Repair_Runways_\CADD\Phase 3\Electrical_Phase 3\10-0863-009-EA104.dwg LAYOUT NAME: EA104 PARTIAL SITE PLAN - CONSTRUCTION PLOTTED: Tuesday, September 27, 2016 - 3:59pm USER: rhurst

CONSTRUCTION NOTES

1. INSTALL RUNWAY DISTANCE MARKER 75 FEET FROM RUNWAY 6-24 EDGE AND A MINIMUM 50 FEET FROM RUNWAY 14-32 EDGE. SPLICE INTO EXISTING RUNWAY 6-24 EDGE LIGHTING CIRCUIT.
2. EXISTING RUNWAY 6-24 CENTERLINE LIGHT, TO REMAIN, TYPICAL. THIS SHEET.
3. EXISTING RUNWAY 6-24 EDGE LIGHT, TO REMIAN, TYPICAL THIS SHEET.
4. EXISTING RUNWAY LIGHTING CONDUIT, VERIFY INTERLEAVING IN EXISTING CIRCUITING, TYPICAL THIS SHEET.

CONSTRUCTION LEGEND

—#— 2" PVC SCHEDULE 40 CONDUIT WITH #6 AWG CABLE AND #4 COPPER COUNTERPOISE, NUMBER OF HASH MARKS INDICATE THE NUMBER OF #6 CABLES

R2 166 FAA L-858 LIGHTED RUNWAY DISTANCE MARKER, CIRCUIT AND FIXTURE NUMBER AS INDICATED

KEY MAP

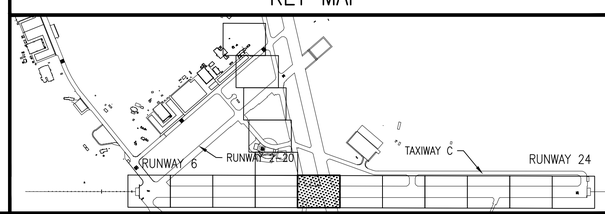

GRAPHIC SCALE

1"=50'

0 50' 100' 200'

SYM	DESCRIPTION	DATE	APPR

NAVFAC

Professional Certification
I HEREBY CERTIFY THAT THESE DOCUMENTS WERE PREPARED OR APPROVED BY ME, AND THAT I AM A DULY LICENSED PROFESSIONAL ENGINEER UNDER THE LAWS OF THE STATE OF MARYLAND, LICENSE NO. 24789, EXPIRATION DATE: 07/05/17.
SEAL

JOHNSON, MIRMIRAN & THOMPSON
Gannett Fleming
A Joint Venture
272 Bendix Road, Suite 260
Virginia Beach, Virginia, 23452
Telephone: (757) 499-1895
Web: www.jmt.com
A/E INFO

APPROVED
FOR COMMANDER NAVFAC
ACTIVITY
JAMES FLETCHER PER CHECKLIST
SATISFACTORY TO DATE 9/27/2016
DES RCH DRW RCH CHK DJP
PM/DM RH
BRANCH MANAGER
CHIEF ENG/ARCH E. GALLAHER, PE

DEPARTMENT OF THE NAVY
NAVAL FACILITIES ENGINEERING COMMAND
NAVFAC WASHINGTON
WASHINGTON, D.C.
NAVAL AIR STATION PATUXENT RIVER
PATUXENT RIVER, MARYLAND
FY16 SPECIAL PROJECT RM12-2137
REPAIR RUNWAYS 14-32 & 6-24 - PHASE 3
PARTIAL SITE PLAN – CONSTRUCTION

SCALE: AS NOTED
EPROJECT NO.: 1382138
CONSTR. CONTR. NO. N40080-17-R-0002
NAVFAC DRAWING NO. 13080245
SHEET 187 OF 206
EA105

DRAWFORM REVISION: 10 MARCH 2009

FILE NAME: G:\PHPA\100863_009_FY16_Repair_Runways_1\CADD\Phase 3\Electrical_Phase 3\10-0863-009-EA105.dwg LAYOUT NAME: EA105 PARTIAL SITE PLAN - CONSTRUCTION PLOTTED: Tuesday, September 27, 2016 - 4:00pm USER: rhurst

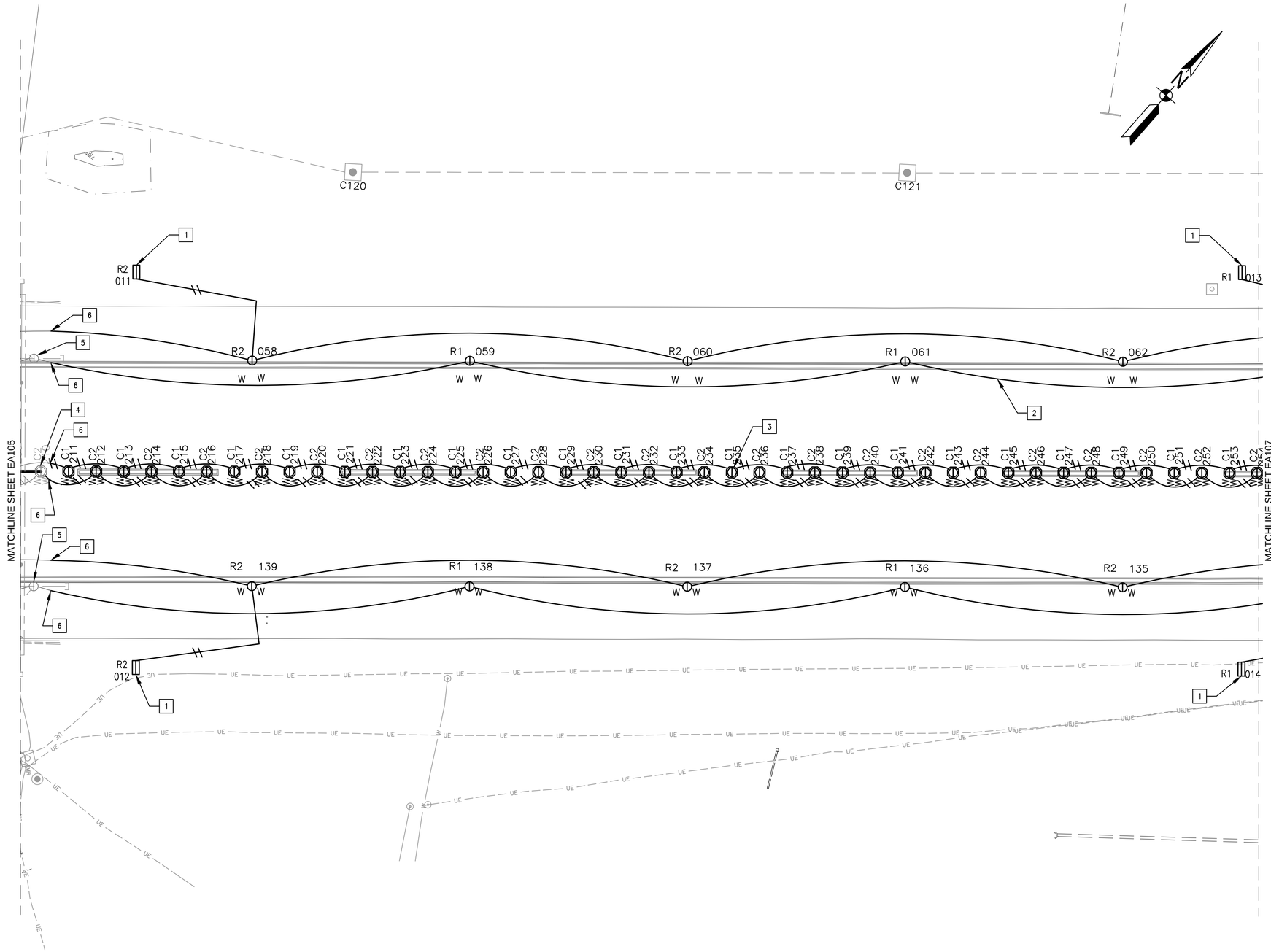

CONSTRUCTION NOTES

1. INSTALL RUNWAY DISTANCE MARKER 75 FEET FROM RUNWAY 6-24 EDGE.
2. THE TWO RUNWAY EDGE LIGHT CIRCUITS ARE TO BE INTERLEAVED IN SEPARATE CONDUITS. REFER TO INTERLEAVED RUNWAY CIRCUIT SCHEMATIC, DETAIL 1, SHEET EA601.
3. THE TWO RUNWAY CENTERLINE LIGHT CIRCUITS ARE TO BE INTERLEAVED IN SEPARATE CONDUITS. REFER TO INTERLEAVED RUNWAY CIRCUIT SCHEMATIC, DETAIL 1, SHEET EA601.
4. EXISTING RUNWAY 6-24 CENTERLINE LIGHT TO REMAIN.
5. EXISTING RUNWAY 6-24 EDGE LIGHT TO REMAIN.
6. CONNECT CONDUIT TO EXISTING. ROUTE LIGHTING CABLES TO EXISTING LIGHT AND SPLICE INTO EXISTING CIRCUIT CONDUCTORS. VERIFY EXISTING CIRCUIT INTERLEAVING FOR CONSISTENT INTERLEAVE.

CONSTRUCTION LEGEND

//	2" PVC SCHEDULE 40 CONDUIT WITH #6 AWG CABLE AND #4 COPPER COUNTERPOISE, NUMBER OF HASH MARKS INDICATE THE NUMBER OF #6 CABLES AND CONDUITS.	1 / EA504
R1 097 W W	FAA L-862 BI-DIRECTIONAL ELEVATED HIGH INTENSITY RUNWAY EDGE LIGHT, WHITE/WHITE LENS COLOR, CIRCUIT AND FIXTURE NUMBER AS INDICATED	1 / EA501
R2 001 W Y	FAA L-862 BI-DIRECTIONAL ELEVATED HIGH INTENSITY RUNWAY EDGE LIGHT, WHITE/YELLOW LENS COLOR, CIRCUIT AND FIXTURE NUMBER AS INDICATED	1 / EA501
R1 045 W W	FAA L-850C BI-DIRECTIONAL IN-PAVEMENT HIGH INTENSITY RUNWAY EDGE LIGHT, WHITE/WHITE LENS COLOR, CIRCUIT AND FIXTURE NUMBER AS INDICATED	2 / EA502
R2 001 W Y	FAA L-850C (RUNWAY) OR L-850D (THRESHOLD) BI-DIRECTIONAL IN-PAVEMENT HIGH INTENSITY EDGE LIGHT, WHITE/YELLOW OR GREEN/RED LENS COLOR, CIRCUIT AND FIXTURE NUMBER AS INDICATED	2 / EA502
C2 201 W W	L-852N (NAVY) BI-DIRECTIONAL IN-PAVEMENT HIGH INTENSITY RUNWAY CENTERLINE LIGHT, WHITE/WHITE LENS COLOR, CIRCUIT AND FIXTURE NUMBER AS INDICATED	2 / EA502
C1 054 W R	L-852N (NAVY) BI-DIRECTIONAL IN-PAVEMENT HIGH INTENSITY RUNWAY CENTERLINE LIGHT, WHITE/RED LENS COLOR, CIRCUIT AND FIXTURE NUMBER AS INDICATED	2 / EA502
R2 166	FAA L-858 LIGHTED RUNWAY DISTANCE MARKER, CIRCUIT AND FIXTURE NUMBER AS INDICATED	1 / EA503

KEY MAP

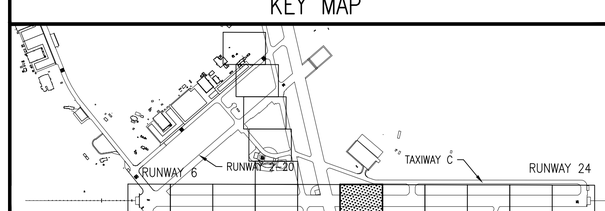

GRAPHIC SCALE

1"=50' 0 50' 100' 200'

SYM	DESCRIPTION	DATE	APPR

NAVFAC

Professional Certification
I HEREBY CERTIFY THAT THESE DOCUMENTS WERE PREPARED OR APPROVED BY ME, AND THAT I AM A DULY LICENSED PROFESSIONAL ENGINEER UNDER THE LAWS OF THE STATE OF MARYLAND, LICENSE NO. 24789.
EXPIRATION DATE: 07/06/17.
SEAL

JOHNSON, MIRMIRAN & THOMPSON
Gannett Fleming
A Joint Venture
272 Bendix Road, Suite 260
Virginia Beach, Virginia, 23452
Telephone: (757) 499-1895
Web: www.jmt.com

A/E INFO

APPROVED
FOR COMMANDER NAVFAC

ACTIVITY
JAMES FLETCHER PER CHECKLIST
SATISFACTORY TO DATE 9/27/2016
DES RCH | DRW RCH | CHK DJP
PM/DM RH
BRANCH MANAGER
CHIEF ENG/ARCH E. GALLAHER, PE

DEPARTMENT OF THE NAVY
NAVAL FACILITIES ENGINEERING COMMAND
WASHINGTON, D.C.
NAVFAC WASHINGTON
NAVAL AIR STATION PATUXENT RIVER
PATUXENT RIVER, MARYLAND
FY16 SPECIAL PROJECT RM12-2137
REPAIR RUNWAYS 14-32 & 6-24 - PHASE 3
PARTIAL SITE PLAN - CONSTRUCTION
PT. BLUE

SCALE: AS NOTED
EPROJECT NO.: 1382138
CONSTR. CONTR. NO. N40080-17-R-0002
NAVFAC DRAWING NO. 13080246
SHEET 188 OF 206
EA106

DRAWFORM REVISION: 10 MARCH 2009

FILE NAME: G:\PHPA\100863_009_FY16_Repair_Runways_\CADD\Phase 3\Electrical_Phase 3\10-0863-009-EA106.dwg LAYOUT NAME: EA106 PARTIAL SITE PLAN - CONSTRUCTION PLOTTED: Tuesday, September 27, 2016 - 4:00pm USER: rhurst

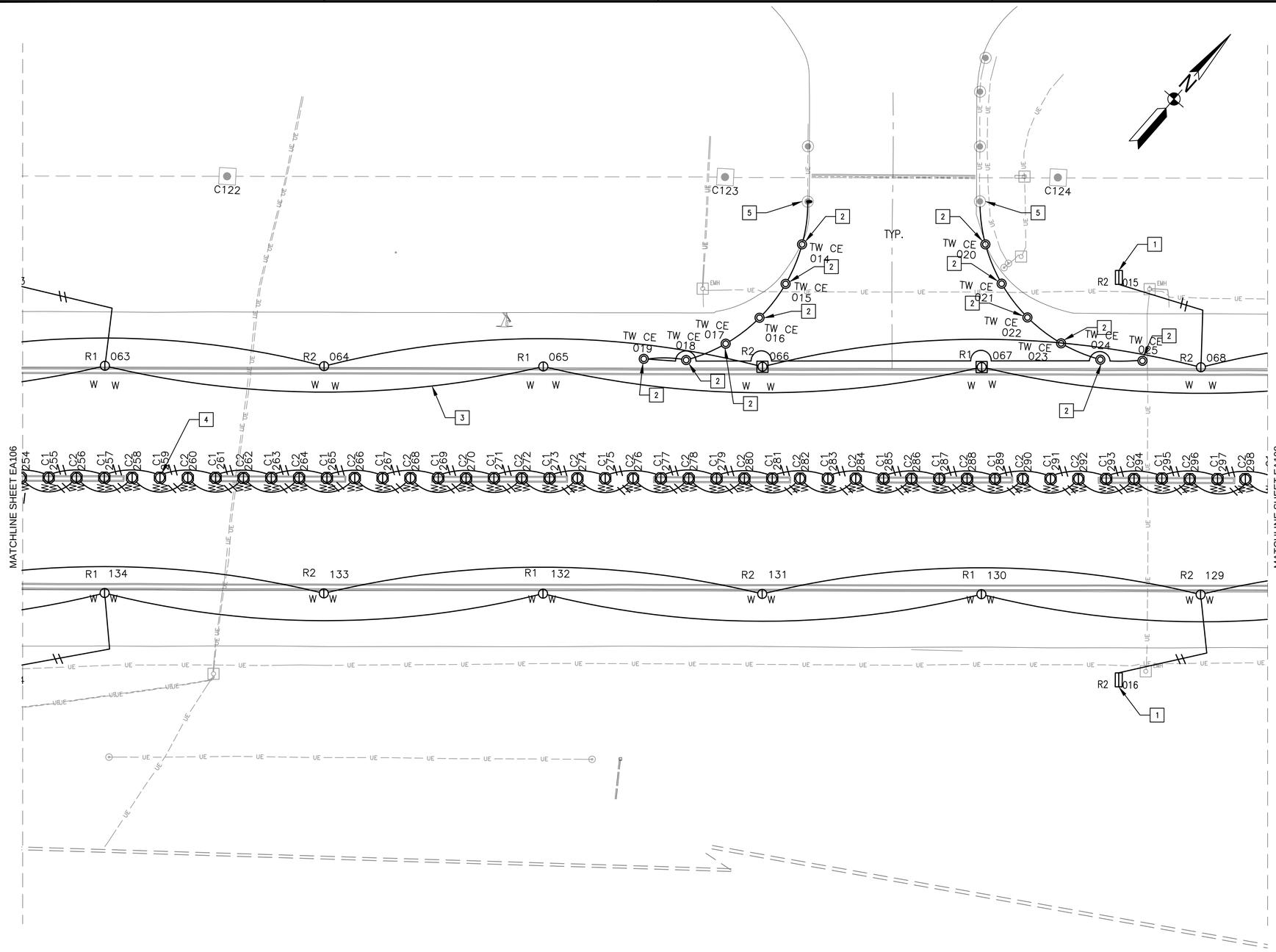

CONSTRUCTION NOTES

1. INSTALL RUNWAY DISTANCE MARKER 75 FEET FROM RUNWAY 6-24 EDGE.
2. RE-INSTALL STORED TAXIWAY EDGE LIGHT AND ISOLATION TRANSFORMER.
3. THE TWO RUNWAY EDGE LIGHT CIRCUITS ARE TO BE INTERLEAVED IN SEPARATE CONDUITS. REFER TO INTERLEAVED RUNWAY CIRCUIT SCHEMATIC, DETAIL 1, SHEET EA601.
4. THE TWO RUNWAY CENTERLINE LIGHT CIRCUITS ARE TO BE INTERLEAVED IN SEPARATE CONDUITS. REFER TO INTERLEAVED RUNWAY CIRCUIT SCHEMATIC, DETAIL 1, SHEET EA601.
5. SPLICE INTO EXISTING TAXIWAY CIRCUIT.

CONSTRUCTION LEGEND

//	2" PVC SCHEDULE 40 CONDUIT WITH #6 AWG CABLE AND #4 COPPER COUNTERPOISE, NUMBER OF HASH MARKS INDICATE THE NUMBER OF #6 CABLES AND CONDUITS.	1 EA504
R1 097 W W	FAA L-862 BI-DIRECTIONAL ELEVATED HIGH INTENSITY RUNWAY EDGE LIGHT, WHITE/WHITE LENS COLOR, CIRCUIT AND FIXTURE NUMBER AS INDICATED	1 EA501
R2 001 W Y	FAA L-862 BI-DIRECTIONAL ELEVATED HIGH INTENSITY RUNWAY EDGE LIGHT, WHITE/YELLOW LENS COLOR, CIRCUIT AND FIXTURE NUMBER AS INDICATED	1 EA501
R1 045 W W	FAA L-850C BI-DIRECTIONAL IN-PAVEMENT HIGH INTENSITY RUNWAY EDGE LIGHT, WHITE/WHITE LENS COLOR, CIRCUIT AND FIXTURE NUMBER AS INDICATED	2 EA502
R2 001 W Y	FAA L-850C (RUNWAY) OR L-850D (THRESHOLD) BI-DIRECTIONAL IN-PAVEMENT HIGH INTENSITY EDGE LIGHT, WHITE/YELLOW OR GREEN/RED LENS COLOR, CIRCUIT AND FIXTURE NUMBER AS INDICATED	2 EA502
C2 201 W W	L-852N (NAVY) BI-DIRECTIONAL IN-PAVEMENT HIGH INTENSITY RUNWAY CENTERLINE LIGHT, WHITE/WHITE LENS COLOR, CIRCUIT AND FIXTURE NUMBER AS INDICATED	2 EA502
C1 054 W R	L-852N (NAVY) BI-DIRECTIONAL IN-PAVEMENT HIGH INTENSITY RUNWAY CENTERLINE LIGHT, WHITE/RED LENS COLOR, CIRCUIT AND FIXTURE NUMBER AS INDICATED	2 EA502
R2 166	FAA L-858 LIGHTED RUNWAY DISTANCE MARKER, CIRCUIT AND FIXTURE NUMBER AS INDICATED	1 EA503

KEY MAP

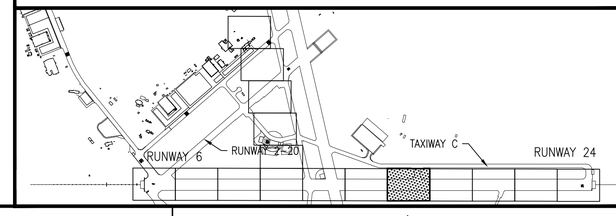

GRAPHIC SCALE

1"=50' 0 50' 100' 200'

SYM	DESCRIPTION	DATE	APPR

NAVFAC

Professional Certification
I HEREBY CERTIFY THAT THESE DOCUMENTS WERE PREPARED OR APPROVED BY ME, AND THAT I AM A DULY LICENSED PROFESSIONAL ENGINEER UNDER THE LAWS OF THE STATE OF MARYLAND, LICENSE NO. 24789, EXPIRATION DATE: 07/06/17.
SEAL

JOHNSON, MIRMIRAN & THOMPSON
Gannett Fleming
A Joint Venture
272 Bendix Road, Suite 260
Virginia Beach, Virginia, 23452
Telephone: (757) 499-1895
Web: www.jmt.com

A/E INFO

APPROVED
FOR COMMANDER NAVFAC
ACTIVITY
JAMES FLETCHER PER CHECKLIST
SATISFACTORY TO DATE 9/27/2016
DES RCH DRW RCH CHK DJP
PM/DM RH
BRANCH MANAGER
CHIEF ENG/ARCH E. GALLAHER, PE

DEPARTMENT OF THE NAVY
NAVAL FACILITIES ENGINEERING COMMAND
WASHINGTON, D.C.
NAVFAC WASHINGTON
IPT BLUE
NAVAL AIR STATION PATUXENT RIVER
PATUXENT RIVER, MARYLAND
FY16 SPECIAL PROJECT RM12-2137
REPAIR RUNWAYS 14-32 & 6-24 - PHASE 3
PARTIAL SITE PLAN – CONSTRUCTION

SCALE: AS NOTED
EPROJECT NO.: 1382138
CONSTR. CONTR. NO. N40080-17-R-0002
NAVFAC DRAWING NO. 13080247
SHEET 189 OF 206
EA107

DRAWFORM REVISION: 10 MARCH 2009

FILE NAME: G:\PHPA\100863_009_FY16_Repair_Runways_\CADD\Phase 3\Electrical_Phase 3\10-0863-009-EA107.dwg LAYOUT NAME: EA107 PARTIAL SITE PLAN - CONSTRUCTION PLOTTED: Tuesday, September 27, 2016 - 4:01pm USER: rhurst

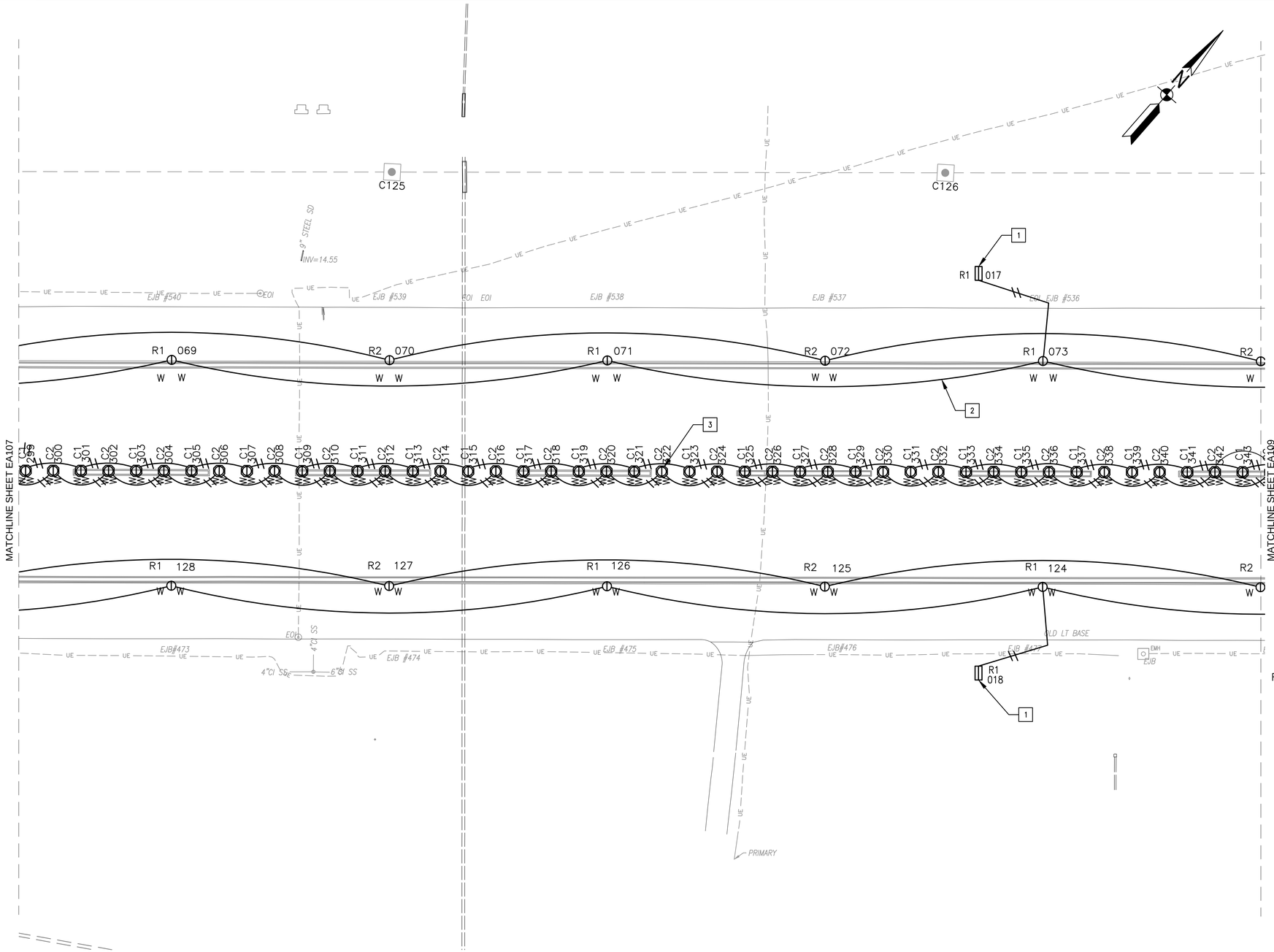

CONSTRUCTION NOTES

1. INSTALL RUNWAY DISTANCE MARKER 75 FEET FROM RUNWAY 6-24 EDGE.
2. THE TWO RUNWAY EDGE LIGHT CIRCUITS ARE TO BE INTERLEAVED IN SEPARATE CONDUITS. REFER TO INTERLEAVED RUNWAY CIRCUIT SCHEMATIC, DETAIL 1, SHEET EA601.
3. THE TWO RUNWAY CENTERLINE LIGHT CIRCUITS ARE TO BE INTERLEAVED IN SEPARATE CONDUITS. REFER TO INTERLEAVED RUNWAY CIRCUIT SCHEMATIC, DETAIL 1, SHEET EA601.

CONSTRUCTION LEGEND

- 2" PVC SCHEDULE 40 CONDUIT WITH #6 AWG CABLE AND #4 COPPER COUNTERPOISE, NUMBER OF HASH MARKS INDICATE THE NUMBER OF #6 CABLES AND CONDUITS. — 1 / EA504
- R1 097 — FAA L-862 BI-DIRECTIONAL ELEVATED HIGH INTENSITY RUNWAY EDGE LIGHT, WHITE/WHITE LENS COLOR, CIRCUIT AND FIXTURE NUMBER AS INDICATED — 1 / EA501
- R2 001 — FAA L-862 BI-DIRECTIONAL ELEVATED HIGH INTENSITY RUNWAY EDGE LIGHT, WHITE/YELLOW LENS COLOR, CIRCUIT AND FIXTURE NUMBER AS INDICATED — 1 / EA501
- R1 045 — FAA L-850C BI-DIRECTIONAL IN-PAVEMENT HIGH INTENSITY RUNWAY EDGE LIGHT, WHITE/WHITE LENS COLOR, CIRCUIT AND FIXTURE NUMBER AS INDICATED — 2 / EA502
- R2 001 — FAA L-850C (RUNWAY) OR L-850D (THRESHOLD) BI-DIRECTIONAL IN-PAVEMENT HIGH INTENSITY EDGE LIGHT, WHITE/YELLOW OR GREEN/RED LENS COLOR, CIRCUIT AND FIXTURE NUMBER AS INDICATED — 2 / EA502
- C2 201 — L-852N (NAVY) BI-DIRECTIONAL IN-PAVEMENT HIGH INTENSITY RUNWAY CENTERLINE LIGHT, WHITE/WHITE LENS COLOR, CIRCUIT AND FIXTURE NUMBER AS INDICATED — 2 / EA502
- C1 054 — L-852N (NAVY) BI-DIRECTIONAL IN-PAVEMENT HIGH INTENSITY RUNWAY CENTERLINE LIGHT, WHITE/RED LENS COLOR, CIRCUIT AND FIXTURE NUMBER AS INDICATED — 2 / EA502
- R2 166 — FAA L-858 LIGHTED RUNWAY DISTANCE MARKER, CIRCUIT AND FIXTURE NUMBER AS INDICATED — 1 / EA503

KEY MAP

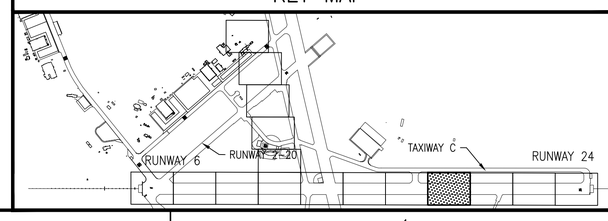

GRAPHIC SCALE

1"=50' 0 50' 100' 200'

SYM	DESCRIPTION	DATE	APPR

NAVFAC

Professional Certification
I HEREBY CERTIFY THAT THESE DOCUMENTS WERE PREPARED OR APPROVED BY ME, AND THAT I AM A DULY LICENSED PROFESSIONAL ENGINEER UNDER THE LAWS OF THE STATE OF MARYLAND, LICENSE NO. 24789, EXPIRATION DATE: 07/06/17.
SEAL

JOHNSON, MIRMIRAN & THOMPSON
Gannett Fleming
A Joint Venture
272 Bendix Road, Suite 260
Virginia Beach, Virginia, 23452
Telephone: (757) 499-1895
Web: www.jmt.com

A/E INFO

APPROVED
FOR COMMANDER NAVFAC
ACTIVITY
JAMES FLETCHER PER CHECKLIST
SATISFACTORY TO DATE 9/27/2016
DES RCH DRW RCH CHK DJP
PM/DM RH
BRANCH MANAGER
CHIEF ENG/ARCH E. GALLAHER, PE

DEPARTMENT OF THE NAVY
NAVAL FACILITIES ENGINEERING COMMAND
WASHINGTON, D.C.
NAVFAC WASHINGTON
NAVAL AIR STATION PATUXENT RIVER
PATUXENT RIVER, MARYLAND
FT. BLUE
FY16 SPECIAL PROJECT RM12-2137
REPAIR RUNWAYS 14-32 & 6-24 - PHASE 3
PARTIAL SITE PLAN - CONSTRUCTION

SCALE: AS NOTED
EPROJECT NO.: 1382138
CONSTR. CONTR. NO. N40080-17-R-0002
NAVFAC DRAWING NO. 13080248
SHEET 190 OF 206
EA108

DRAWFORM REVISION: 10 MARCH 2009

FILE NAME: G:\PHPA\100863_009_FY16_Repair_Runways_\CADD\Phase 3\Electrical_Phase 3\10-0863-009-EA108.dwg LAYOUT NAME: EA108 PARTIAL SITE PLAN - CONSTRUCTION PLOTTED: Tuesday, September 27, 2016 - 4:01pm USER: rhurst

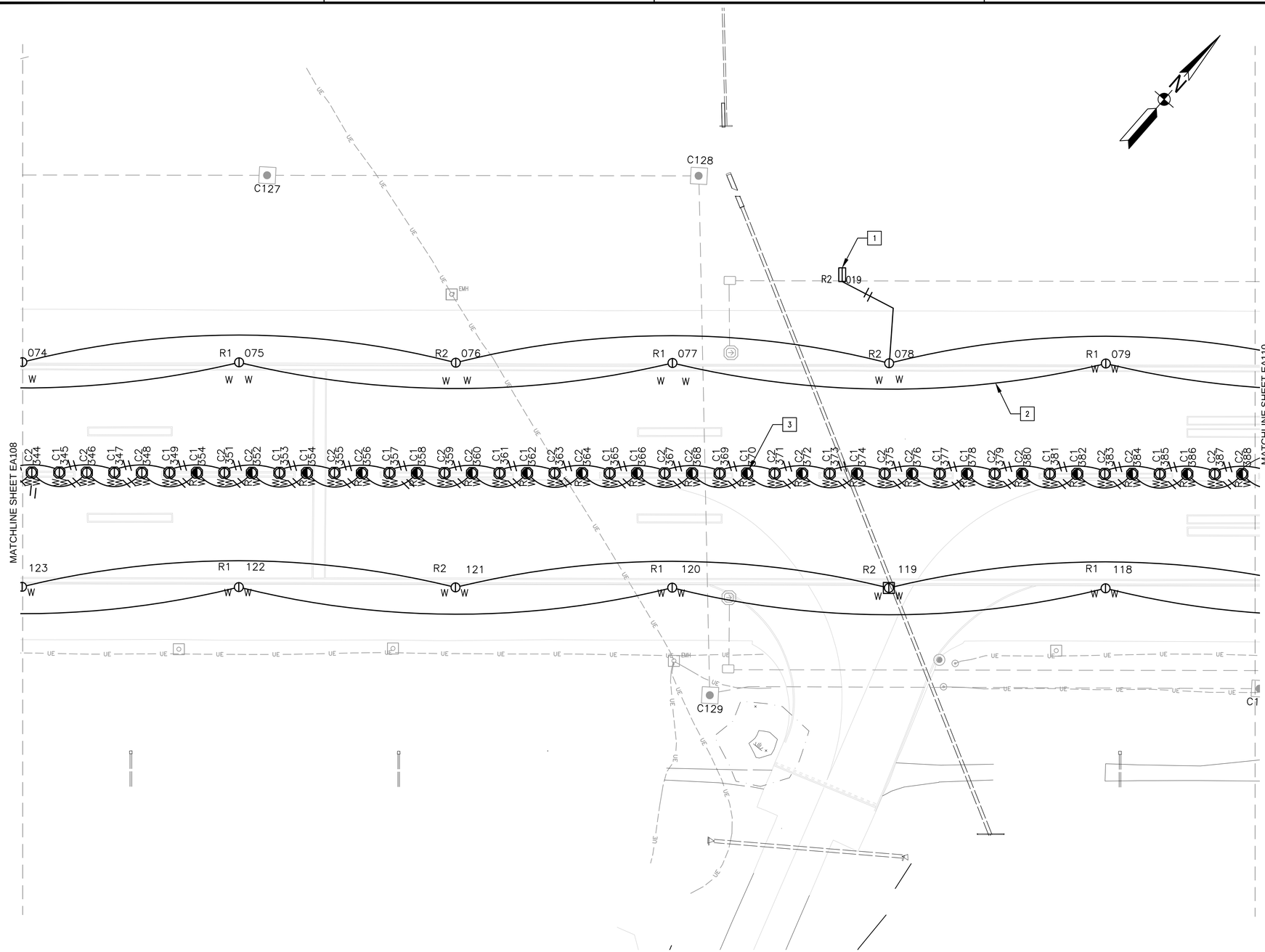

CONSTRUCTION NOTES

1. INSTALL RUNWAY DISTANCE MARKER 75 FEET FROM RUNWAY 6–24 EDGE.
2. THE TWO RUNWAY EDGE LIGHT CIRCUITS ARE TO BE INTERLEAVED IN SEPARATE CONDUITS. REFER TO INTERLEAVED RUNWAY CIRCUIT SCHEMATIC, DETAIL 1, SHEET EA601.
3. THE TWO RUNWAY CENTERLINE LIGHT CIRCUITS ARE TO BE INTERLEAVED IN SEPARATE CONDUITS. REFER TO INTERLEAVED RUNWAY CIRCUIT SCHEMATIC, DETAIL 1, SHEET EA601.

CONSTRUCTION LEGEND

//	2" PVC SCHEDULE 40 CONDUIT WITH #6 AWG CABLE AND #4 COPPER COUNTERPOISE, NUMBER OF HASH MARKS INDICATE THE NUMBER OF #6 CABLES AND CONDUITS. — 1 / EA504
R1 097 W W	FAA L-862 BI-DIRECTIONAL ELEVATED HIGH INTENSITY RUNWAY EDGE LIGHT, WHITE/WHITE LENS COLOR, CIRCUIT AND FIXTURE NUMBER AS INDICATED — 1 / EA501
R2 001 W Y	FAA L-862 BI-DIRECTIONAL ELEVATED HIGH INTENSITY RUNWAY EDGE LIGHT, WHITE/YELLOW LENS COLOR, CIRCUIT AND FIXTURE NUMBER AS INDICATED — 1 / EA501
R1 045 W W	FAA L-850C BI-DIRECTIONAL IN-PAVEMENT HIGH INTENSITY RUNWAY EDGE LIGHT, WHITE/WHITE LENS COLOR, CIRCUIT AND FIXTURE NUMBER AS INDICATED — 2 / EA502
R2 001 W Y	FAA L-850C (RUNWAY) OR L-850D (THRESHOLD) BI-DIRECTIONAL IN-PAVEMENT HIGH INTENSITY EDGE LIGHT, WHITE/YELLOW OR GREEN/RED LENS COLOR, CIRCUIT AND FIXTURE NUMBER AS INDICATED — 2 / EA502
C2 201 W W	L-852N (NAVY) BI-DIRECTIONAL IN-PAVEMENT HIGH INTENSITY RUNWAY CENTERLINE LIGHT, WHITE/WHITE LENS COLOR, CIRCUIT AND FIXTURE NUMBER AS INDICATED — 2 / EA502
C1 054 W R	L-852N (NAVY) BI-DIRECTIONAL IN-PAVEMENT HIGH INTENSITY RUNWAY CENTERLINE LIGHT, WHITE/RED LENS COLOR, CIRCUIT AND FIXTURE NUMBER AS INDICATED — 2 / EA502
R2 166	FAA L-858 LIGHTED RUNWAY DISTANCE MARKER, CIRCUIT AND FIXTURE NUMBER AS INDICATED — 1 / EA503

KEY MAP

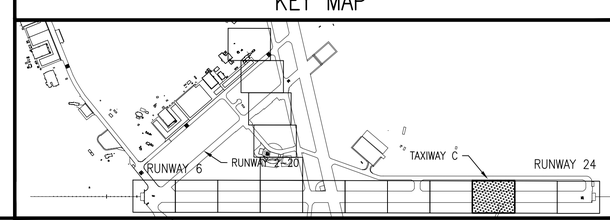

GRAPHIC SCALE

1"=50' 0 50' 100' 200'

SYM	DESCRIPTION	DATE	APPR

NAVFAC

Professional Certification
I HEREBY CERTIFY THAT THESE DOCUMENTS WERE PREPARED OR APPROVED BY ME, AND THAT I AM A DULY LICENSED PROFESSIONAL ENGINEER UNDER THE LAWS OF THE STATE OF MARYLAND, LICENSE NO. 24789, EXPIRATION DATE: 07/06/17.
SEAL

JOHNSON, MIRMIRAN & THOMPSON
Gannett Fleming
A Joint Venture
272 Bendix Road, Suite 260
Virginia Beach, Virginia, 23452
Telephone: (757) 499-1895
Web: www.jmt.com

A/E INFO

APPROVED
FOR COMMANDER NAVFAC
ACTIVITY
JAMES FLETCHER PER CHECKLIST
SATISFACTORY TO DATE 9/27/2016
DES RCH | DRW RCH | CHK DJP
PM/DM RH
BRANCH MANAGER
CHIEF ENG/ARCH E. GALLAHER, PE

DEPARTMENT OF THE NAVY
NAVAL FACILITIES ENGINEERING COMMAND
WASHINGTON, D.C.
NAVFAC WASHINGTON
NAVAL AIR STATION PATUXENT RIVER
PATUXENT RIVER, MARYLAND
FY16 SPECIAL PROJECT RM12-2137
REPAIR RUNWAYS 14-32 & 6-24 - PHASE 3
PARTIAL SITE PLAN – CONSTRUCTION
PT. BLUE

SCALE: AS NOTED
EPROJECT NO.: 1382138
CONSTR. CONTR. NO. N40080-17-R-0002
NAVFAC DRAWING NO. 13080249
SHEET 191 OF 206
EA109

DRAWFORM REVISION: 10 MARCH 2009

FILE NAME: G:\PHPA\100863_009_FY16_Repair_Runways_\CADD\Phase 3\Electrical_Phase 3\10-0863-009-EA109.dwg LAYOUT NAME: EA109 PARTIAL SITE PLAN – CONSTRUCTION PLOTTED: Tuesday, September 27, 2016 – 4:02pm USER: rhurst

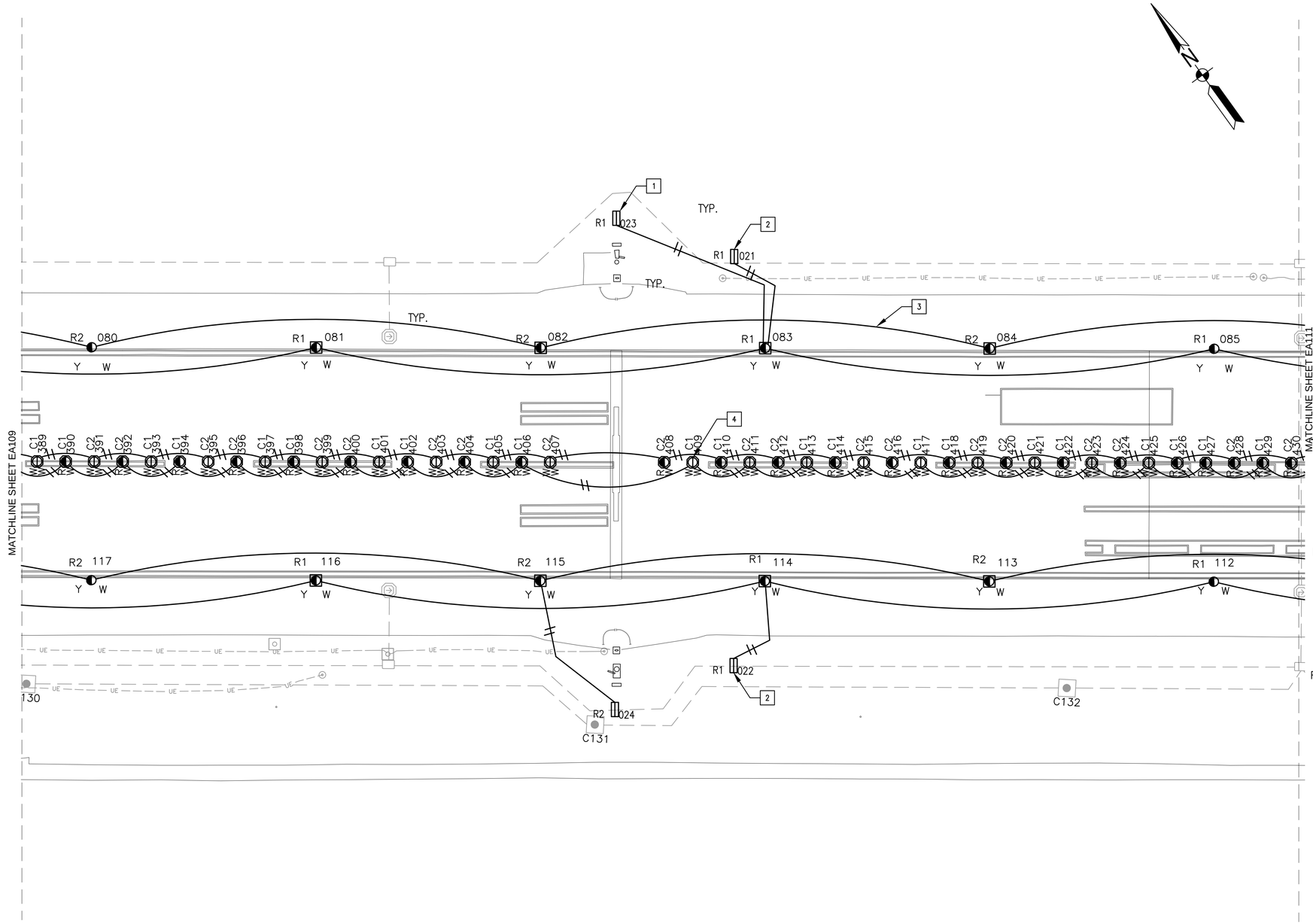

CONSTRUCTION NOTES

1. INSTALL ARRESTING GEAR MARKER 100 FEET FROM RUNWAY 6–24 EDGE.

   THE INSTALLATION OF THE MARKERS AND MARKINGS SHALL BE AS FOLLOWS:
   A. THE BASES OF THE ARRESTING GEAR MARKERS SHALL BE NOT LESS THAN 6 INCHES ABOVE THE GROUND.
   B. THE TOP OF THE MARKER SHALL BE NOT MORE THAN 57 ±3 INCHES ABOVE THE NEAR RUNWAY EDGE AT THE POSITION.
   C. THE AXES OF THE MARKERS SHALL BE AT RIGHT ANGLES ±2 DEGREES TO THE RUNWAY CENTERLINE AND ALONG THE LINES CONNECTING THE PAIRS OF MARKERS.
   D. INDIVIDUAL MARKERS MAY HAVE A 1–FOOT TOLERANCE FROM THE LINE ALONG THE DECK PENDANT.
   E. THE FACES OF THE SIGNS SHALL BE VERTICAL ±2 DEGREES.

2. INSTALL RUNWAY DISTANCE MARKER 75 FEET FROM RUNWAY 6–24 EDGE.

3. THE TWO RUNWAY EDGE LIGHT CIRCUITS ARE TO BE INTERLEAVED IN SEPARATE CONDUITS. REFER TO INTERLEAVED RUNWAY CIRCUIT SCHEMATIC, DETAIL 1, SHEET EA601.

4. THE TWO RUNWAY CENTERLINE LIGHT CIRCUITS ARE TO BE INTERLEAVED IN SEPARATE CONDUITS. REFER TO INTERLEAVED RUNWAY CIRCUIT SCHEMATIC, DETAIL 1, SHEET EA601.

CONSTRUCTION LEGEND

//	2" PVC SCHEDULE 40 CONDUIT WITH #6 AWG CABLE AND #4 COPPER COUNTERPOISE, NUMBER OF HASH MARKS INDICATE THE NUMBER OF #6 CABLES AND CONDUITS.	1 / EA504
R1 097 W W	FAA L–862 BI–DIRECTIONAL ELEVATED HIGH INTENSITY RUNWAY EDGE LIGHT, WHITE/WHITE LENS COLOR, CIRCUIT AND FIXTURE NUMBER AS INDICATED	1 / EA501
R2 001 W Y	FAA L–862 BI–DIRECTIONAL ELEVATED HIGH INTENSITY RUNWAY EDGE LIGHT, WHITE/YELLOW LENS COLOR, CIRCUIT AND FIXTURE NUMBER AS INDICATED	1 / EA501
R1 045 W W	FAA L–850C BI–DIRECTIONAL IN–PAVEMENT HIGH INTENSITY RUNWAY EDGE LIGHT, WHITE/WHITE LENS COLOR, CIRCUIT AND FIXTURE NUMBER AS INDICATED	2 / EA502
R2 001 W Y	FAA L–850C (RUNWAY) OR L–850D (THRESHOLD) BI–DIRECTIONAL IN–PAVEMENT HIGH INTENSITY EDGE LIGHT, WHITE/YELLOW OR GREEN/RED LENS COLOR, CIRCUIT AND FIXTURE NUMBER AS INDICATED	2 / EA502
C2 201 W W	L–852N (NAVY) BI–DIRECTIONAL IN–PAVEMENT HIGH INTENSITY RUNWAY CENTERLINE LIGHT, WHITE/WHITE LENS COLOR, CIRCUIT AND FIXTURE NUMBER AS INDICATED	2 / EA502
C1 054 W R	L–852N (NAVY) BI–DIRECTIONAL IN–PAVEMENT HIGH INTENSITY RUNWAY CENTERLINE LIGHT, WHITE/RED LENS COLOR, CIRCUIT AND FIXTURE NUMBER AS INDICATED	2 / EA502
R2 166	FAA L–858 LIGHTED RUNWAY DISTANCE MARKER, CIRCUIT AND FIXTURE NUMBER AS INDICATED	1 / EA503

KEY MAP

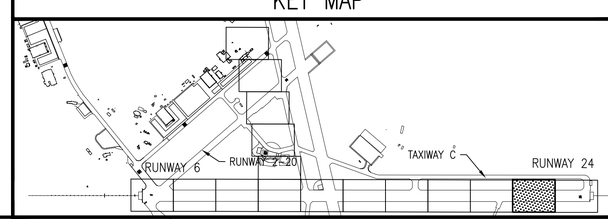

GRAPHIC SCALE

1"=50' 0 50' 100' 200'

SYM	DESCRIPTION	DATE	APPR

NAVFAC

Professional Certification
I HEREBY CERTIFY THAT THESE DOCUMENTS WERE PREPARED OR APPROVED BY ME, AND THAT I AM A DULY LICENSED PROFESSIONAL ENGINEER UNDER THE LAWS OF THE STATE OF MARYLAND, LICENSE NO. 24789, EXPIRATION DATE: 07/06/17.
SEAL

JOHNSON, MIRMIRAN & THOMPSON
Gannett Fleming
A Joint Venture
272 Bendix Road, Suite 260
Virginia Beach, Virginia, 23452
Telephone: (757) 499–1895
Web: www.jmt.com

A/E INFO

APPROVED
FOR COMMANDER NAVFAC

ACTIVITY
JAMES FLETCHER PER CHECKLIST
SATISFACTORY TO DATE 9/27/2016
DES RCH | DRW RCH | CHK DJP
PM/DM RH
BRANCH MANAGER
CHIEF ENG/ARCH E. GALLAHER, PE

DEPARTMENT OF THE NAVY
NAVAL FACILITIES ENGINEERING COMMAND
WASHINGTON, D.C.
NAVFAC WASHINGTON
NAVAL AIR STATION PATUXENT RIVER
PATUXENT RIVER, MARYLAND
FY16 SPECIAL PROJECT RM12-2137
REPAIR RUNWAYS 14-32 & 6-24 - PHASE 3
PARTIAL SITE PLAN – CONSTRUCTION

SCALE: AS NOTED
EPROJECT NO.: 1382138
CONSTR. CONTR. NO. N40080–17–R–0002
NAVFAC DRAWING NO. 13080250
SHEET 192 OF 206
EA110

DRAWFORM REVISION: 10 MARCH 2009

FILE NAME: G:\PHPA\100863_009_FY16_Repair_Runways_\CADD\Phase 3\Electrical_Phase 3\10-0863-009-EA110.dwg LAYOUT NAME: EA110 PARTIAL SITE PLAN – CONSTRUCTION PLOTTED: Tuesday, September 27, 2016 – 4:03pm USER: rhurst

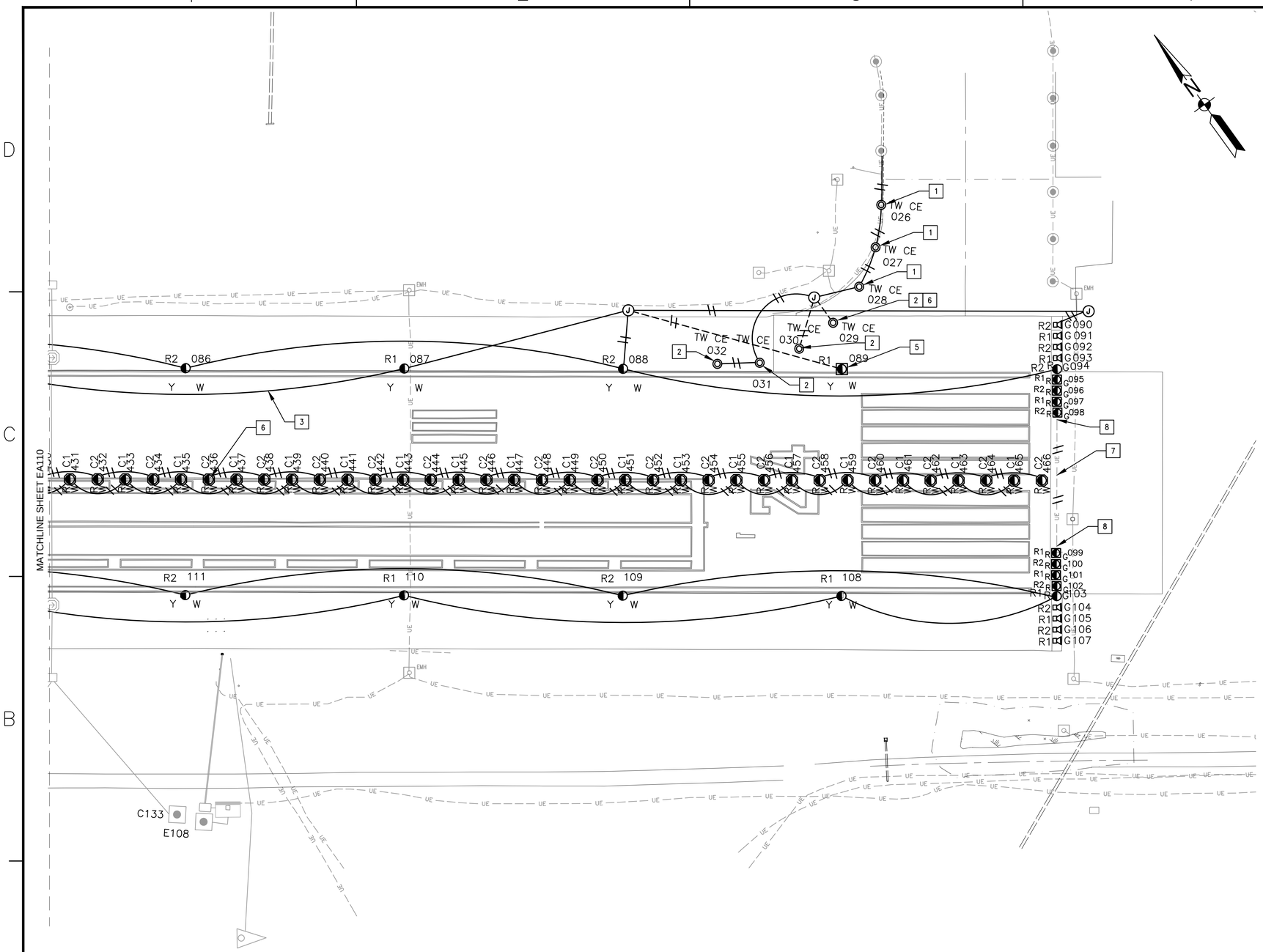

CONSTRUCTION NOTES

1. RE-INSTALL STORED TAXIWAY EDGE LIGHT AND ISOLATION TRANSFORMER.
2. PROVIDE AND INSTALL ELEVATED TAXIWAY EDGE LIGHT AND ISOLATION TRANSFORMER.
3. THE TWO RUNWAY EDGE LIGHT CIRCUITS ARE TO BE INTERLEAVED IN SEPARATE CONDUITS. REFER TO INTERLEAVED RUNWAY CIRCUIT SCHEMATIC, DETAIL 1, SHEET EA601.
4. THE TWO RUNWAY CENTERLINE LIGHT CIRCUITS ARE TO BE INTERLEAVED IN SEPARATE CONDUITS. REFER TO INTERLEAVED RUNWAY CIRCUIT SCHEMATIC, DETAIL 1, SHEET EA601.
5. INSTALL SEMI-FLUSH LIGHT R1 089 USING THE CORE DRILL METHOD AS SHOWN IN DETAIL 5, SHEET EA503.REFER TO
6. LIGHTS IN PCC PAVEMENT SHALL BE INSTALLED BY PARTIAL SLAB REPLACMENT, REFER TO PLAN SHEET C-408, DETAIL SHEET C-515 AND DETAIL 4, SHEET EA503.
7. ROUTE CONDUCTORS IN EXISTING CONDUIT.
8. CONNECT TO EXISTING CONDUIT.

CONSTRUCTION LEGEND

	2" PVC SCHEDULE 40 CONDUIT WITH #6 AWG CABLE AND #4 COPPER COUNTERPOISE, NUMBER OF HASH MARKS INDICATE THE NUMBER OF #6 CABLES AND CONDUITS.	1 / EA504
	2" DIRECTIONALLY DRILLED HDPE CONDUIT WITH #6 AWG CABLE AND #4 COPPER COUNTERPOISE, NUMBER OF HASH MARKS INDICATE THE NUMBER OF #6 CABLES	
R1 097 W W	FAA L-862 BI-DIRECTIONAL ELEVATED HIGH INTENSITY RUNWAY EDGE LIGHT, WHITE/WHITE LENS COLOR, CIRCUIT AND FIXTURE NUMBER AS INDICATED	1 / EA501
R2 001 W Y	FAA L-862 BI-DIRECTIONAL ELEVATED HIGH INTENSITY RUNWAY EDGE LIGHT, WHITE/YELLOW LENS COLOR, CIRCUIT AND FIXTURE NUMBER AS INDICATED	1 / EA501
R1 045 W W	FAA L-850C BI-DIRECTIONAL IN-PAVEMENT HIGH INTENSITY RUNWAY EDGE LIGHT, WHITE/WHITE LENS COLOR, CIRCUIT AND FIXTURE NUMBER AS INDICATED	2 / EA502
R2 001 W Y	FAA L-850C (RUNWAY) OR L-850D (THRESHOLD) BI-DIRECTIONAL IN-PAVEMENT HIGH INTENSITY EDGE LIGHT, WHITE/YELLOW OR GREEN/RED LENS COLOR, CIRCUIT AND FIXTURE NUMBER AS INDICATED	2 / EA502
C2 201 W W	L-852N (NAVY) BI-DIRECTIONAL IN-PAVEMENT HIGH INTENSITY RUNWAY CENTERLINE LIGHT, WHITE/WHITE LENS COLOR, CIRCUIT AND FIXTURE NUMBER AS INDICATED	2 / EA502
C1 054 W R	L-852N (NAVY) BI-DIRECTIONAL IN-PAVEMENT HIGH INTENSITY RUNWAY CENTERLINE LIGHT, WHITE/RED LENS COLOR, CIRCUIT AND FIXTURE NUMBER AS INDICATED	2 / EA502
R2 166	FAA L-858 LIGHTED RUNWAY DISTANCE MARKER, CIRCUIT AND FIXTURE NUMBER AS INDICATED	1 / EA503
R1 150 G R	FAA L-862 BI-DIRECTIONAL ELEVATED HIGH INTENSITY THRESHOLD LIGHT, GREEN/RED LENS COLOR, CIRCUIT AND FIXTURE NUMBER AS INDICATED	1 / EA501
A1 149 G	FAA L-850E BI-DIRECTIONAL IN-PAVEMENT HIGH INTENSITY THRESHOLD LIGHT, GREEN/RED LENS COLOR, CIRCUIT AND FIXTURE NUMBER AS INDICATED	2 / EA502
R1 001 G	FAA-E-982, 500W, PAR 56, OUTBOARD THRESHOLD LIGHT, GREEN LENS COLOR, CIRCUIT AND FIXTURE NUMBER AS INDICATED	2 / EA504
TW A	RE-INSTALL OR PROVIDE, AS NOTED, L-861T, TAXIWAY EDGE LIGHT WITH BLUE LENS, CIRCUIT NUMBER AS INDICATED.	1 / EA501

KEY MAP

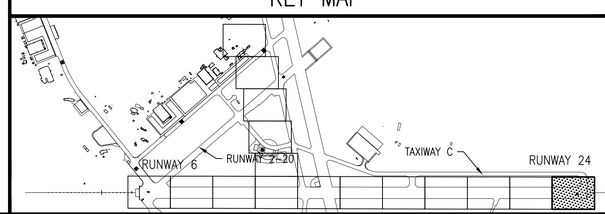

GRAPHIC SCALE

1"=50' 0 50' 100' 200'

SYM	DESCRIPTION	DATE	APPR

NAVFAC

STATE OF MARYLAND — JONATHAN T. HERSEY — No. 24789 — PROFESSIONAL ENGINEER

Professional Certification
I HEREBY CERTIFY THAT THESE DOCUMENTS WERE PREPARED OR APPROVED BY ME, AND THAT I AM A DULY LICENSED PROFESSIONAL ENGINEER UNDER THE LAWS OF THE STATE OF MARYLAND, LICENSE NO. 24789. EXPIRATION DATE: 07/05/17. SEAL

JOHNSON, MIRMIRAN & THOMPSON
Gannett Fleming
A Joint Venture
272 Bendix Road, Suite 260
Virginia Beach, Virginia, 23452
Telephone: (757) 499-1895
Web: www.jmt.com

A/E INFO

APPROVED

FOR COMMANDER NAVFAC

ACTIVITY

JAMES FLETCHER PER CHECKLIST
SATISFACTORY TO DATE 9/27/2016

DES: RCH DRW: RCH CHK: DJP
PM/DM: RH
BRANCH MANAGER
CHIEF ENG/ARCH: E. GALLAHER, PE

DEPARTMENT OF THE NAVY — NAVAL FACILITIES ENGINEERING COMMAND — WASHINGTON, D.C.
NAVFAC WASHINGTON
NAVAL AIR STATION PATUXENT RIVER — PATUXENT RIVER, MARYLAND
OFFICE BLUE

FY16 SPECIAL PROJECT RM12-2137
REPAIR RUNWAYS 14-32 & 6-24 - PHASE 3

PARTIAL SITE PLAN – CONSTRUCTION

SCALE: AS NOTED
EPROJECT NO.: 1382138
CONSTR. CONTR. NO. N40080-17-R-0002
NAVFAC DRAWING NO. 13080251
SHEET 193 OF 206

EA111

DRAWFORM REVISION: 10 MARCH 2009

FILE NAME: G:\PHPA\100863_009_FY16_Repair_Runways_\CADD\Phase 3\Electrical_Phase 3\10-0863-009-EA111.dwg LAYOUT NAME: EA111 PARTIAL SITE PLAN - CONSTRUCTION PLOTTED: Tuesday, September 27, 2016 - 4:03pm USER: rhurst

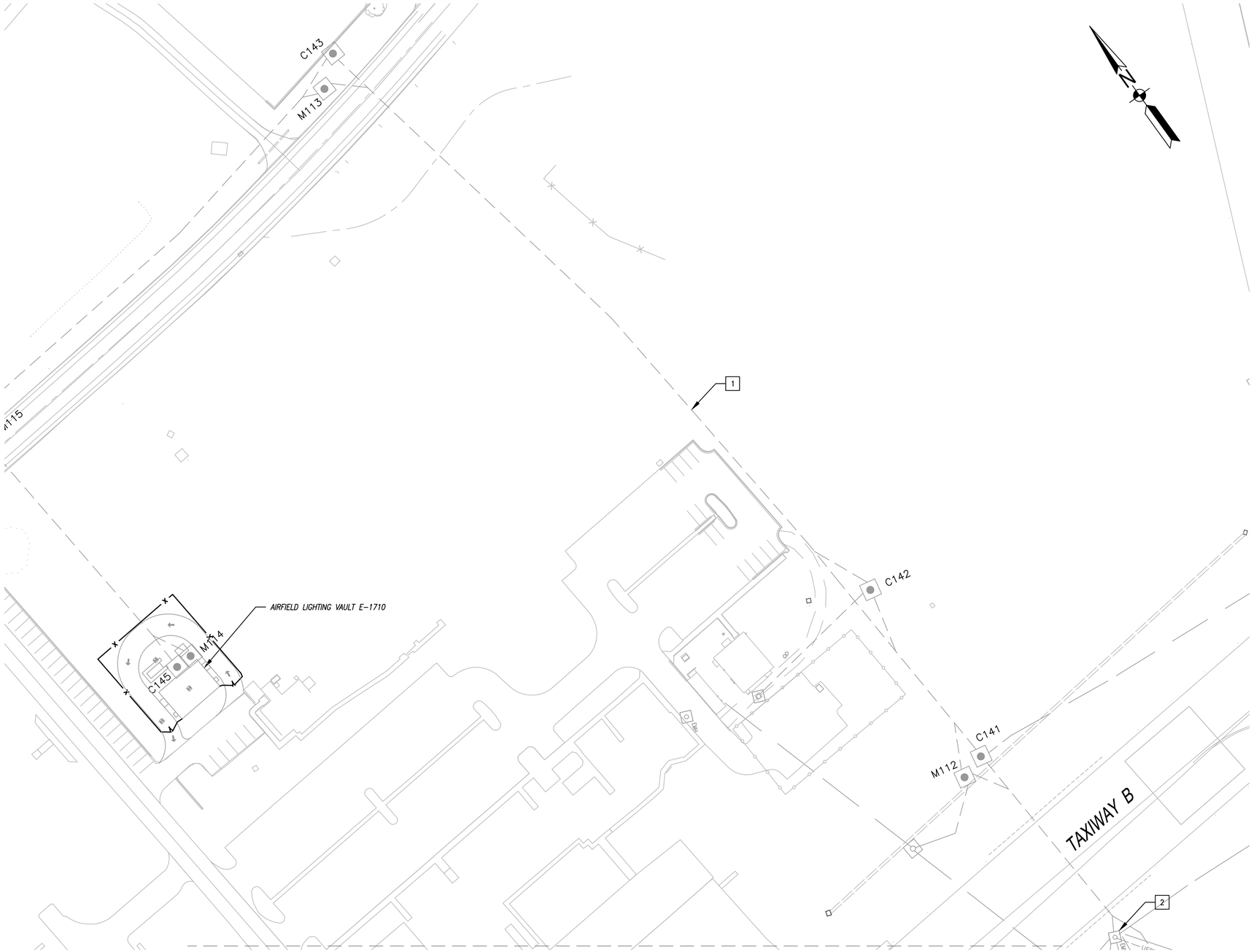

CONSTRUCTION NOTES

1. EXISTING AIRFIELD LIGHTING DUCTBANK.
2. LOCATE THE FOLLOWING EXISTING CIRCUIT CONDUCTORS, PROVIDE AND SPLICE CIRCUIT CONDUCTORS TO THE EXISTING CIRCUITS:
   - RUNWAY 6-24 EDGE LIGHTS CIRCUIT 1
   - RUNWAY 6-24 EDGE LIGHTS CIRCUIT 2
   - RUNWAY 6-24 CENTERLINE LIGHTS CIRCUIT 1
   - RUNWAY 6-24 CENTERLINE LIGHTS CIRCUIT 2

CONSTRUCTION LEGEND

- EXISTING DUCT BANK
- EXISTING MANHOLE/HANDHOLE

KEY MAP

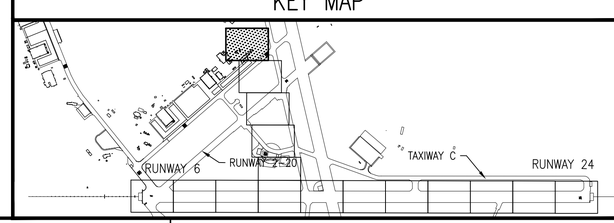

GRAPHIC SCALE

1"=50' 0 50' 100' 200'

SYM	DESCRIPTION	DATE	APPR

NAVFAC

Professional Certification
I HEREBY CERTIFY THAT THESE DOCUMENTS WERE PREPARED OR APPROVED BY ME, AND THAT I AM A DULY LICENSED PROFESSIONAL ENGINEER UNDER THE LAWS OF THE STATE OF MARYLAND, LICENSE NO. 24789, EXPIRATION DATE: 07/05/17. SEAL

JOHNSON, MIRMIRAN & THOMPSON
Gannett Fleming
A Joint Venture
272 Bendix Road, Suite 260
Virginia Beach, Virginia, 23452
Telephone: (757) 499-1895
Web: www.jmt.com

A/E INFO

APPROVED
FOR COMMANDER NAVFAC
ACTIVITY
JAMES FLETCHER PER CHECKLIST
SATISFACTORY TO DATE 9/27/2016
DES RCH DRW RCH CHK DJP
PM/DM RH
BRANCH MANAGER
CHIEF ENG/ARCH E. GALLAHER, PE

DEPARTMENT OF THE NAVY
NAVAL FACILITIES ENGINEERING COMMAND
NAVFAC WASHINGTON
WASHINGTON, D.C.
NAVAL AIR STATION PATUXENT RIVER
PATUXENT RIVER, MARYLAND
FY16 SPECIAL PROJECT RM12-2137
REPAIR RUNWAYS 14-32 & 6-24 - PHASE 3
PARTIAL SITE PLAN - CONSTRUCTION
PT BLUE

SCALE: AS NOTED
EPROJECT NO.: 1382138
CONSTR. CONTR. NO. N40080-17-R-0002
NAVFAC DRAWING NO. 13080252
SHEET 194 OF 206
EA112

DRAWFORM REVISION: 10 MARCH 2009

FILE NAME: G:\PHPA\100863_009_FY16_Repair_Runways_\CADD\Phase 3\Electrical_Phase 3\10-0863-009-EA112.dwg LAYOUT NAME: EA112 PARTIAL SITE PLAN - CONSTRUCTION PLOTTED: Tuesday, September 27, 2016 - 4:04pm USER: rhurst

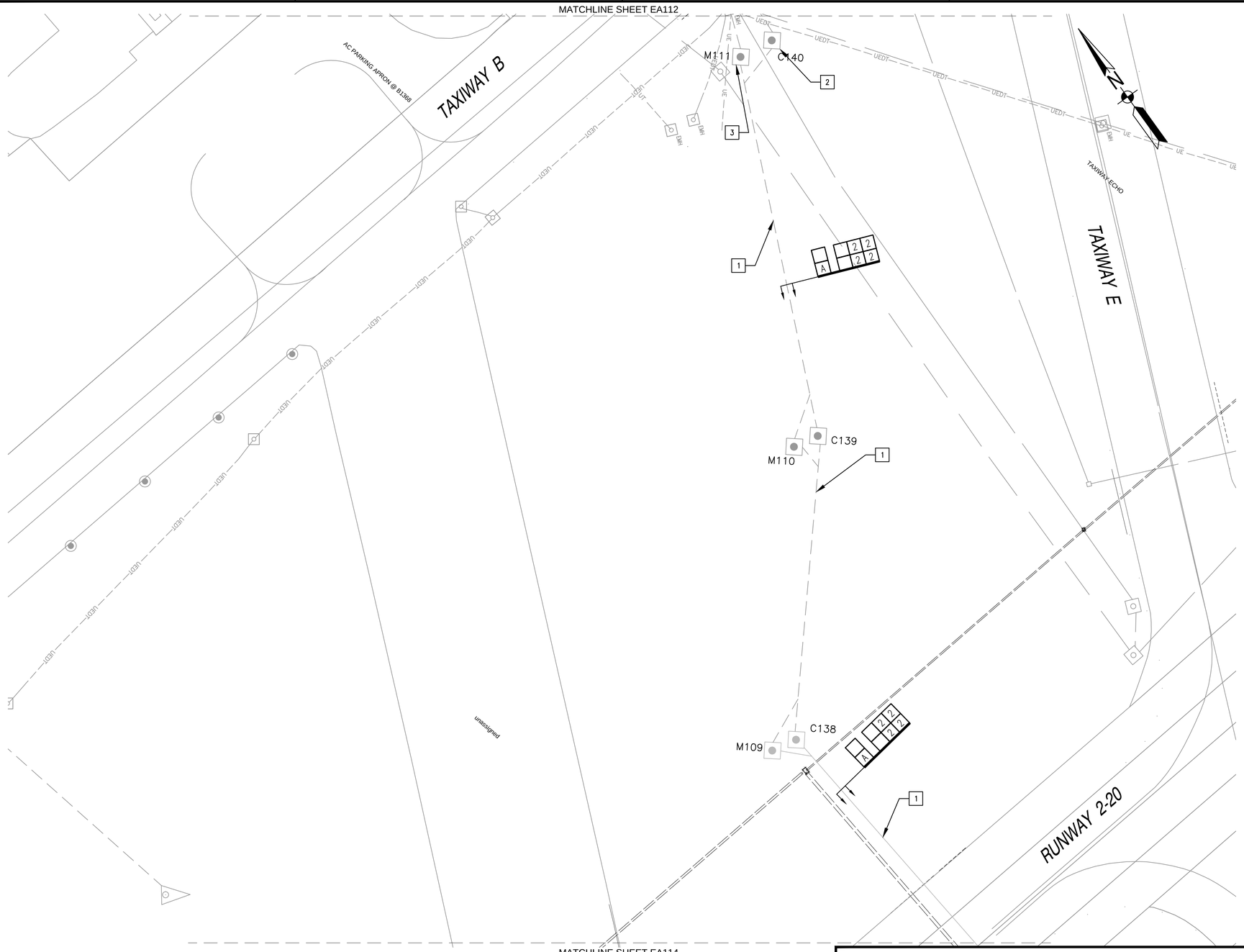

CONSTRUCTION NOTES

1. EXISTING AIRFIELD LIGHTING DUCTBANK, ROUTE 2–#6 AWG L–824B CABLES, 1 CIRCUIT (2 CABLES) PER 2" DUCT, FOR THE FOLLOWING CIRCUITS:
   - RUNWAY 6–24 CENTERLINE LIGHTS, CIRCUIT 1
   - RUNWAY 6–24 CENTERLINE LIGHTS, CIRCUIT 2
   - RUNWAY 6–24 EDGE LIGHTS, CIRCUIT 1
   - RUNWAY 6–24 EDGE LIGHTS, CIRCUIT 2
2. SPLICE THE FOLLOWING CIRCUITS TO EXISTING CONDUCTORS FROM LIGHTING VAULT:
   - RUNWAY 6–24 CENTERLINE LIGHTS, CIRCUIT 1
   - RUNWAY 6–24 CENTERLINE LIGHTS, CIRCUIT 2
   - RUNWAY 6–24 EDGE LIGHTS, CIRCUIT 1
   - RUNWAY 6–24 EDGE LIGHTS, CIRCUIT 2
3. EXISTING COMMUNICATION HANDHOLE.

CONSTRUCTION LEGEND

- EXISTING DUCT BANK
- EXISTING MANHOLE/HANDHOLE

KEY MAP

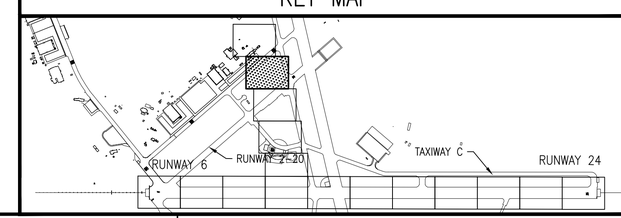

GRAPHIC SCALE

1"=50' 0 50' 100' 200'

SYM	DESCRIPTION	DATE	APPR

Professional Certification
I HEREBY CERTIFY THAT THESE DOCUMENTS WERE PREPARED OR APPROVED BY ME, AND THAT I AM A DULY LICENSED PROFESSIONAL ENGINEER UNDER THE LAWS OF THE STATE OF MARYLAND, LICENSE NO. 24789, EXPIRATION DATE: 07/05/17.
SEAL

JOHNSON, MIRMIRAN & THOMPSON
Gannett Fleming
A Joint Venture
272 Bendix Road, Suite 260
Virginia Beach, Virginia, 23452
Telephone: (757) 499–1895
Web: www.jmt.com
A/E INFO

APPROVED
FOR COMMANDER NAVFAC
ACTIVITY
JAMES FLETCHER PER CHECKLIST
SATISFACTORY TO DATE 9/27/2016
DES RCH DRW RCH CHK DJP
PM/DM RH
BRANCH MANAGER
CHIEF ENG/ARCH E. GALLAHER, PE

DEPARTMENT OF THE NAVY
NAVAL FACILITIES ENGINEERING COMMAND
WASHINGTON, D.C.
NAVFAC WASHINGTON
NAVAL AIR STATION PATUXENT RIVER
PATUXENT RIVER, MARYLAND
IPT BLUE
FY16 SPECIAL PROJECT RM12-2137
REPAIR RUNWAYS 14-32 & 6-24 - PHASE 3
PARTIAL SITE PLAN – CONSTRUCTION

SCALE: AS NOTED
EPROJECT NO.: 1382138
CONSTR. CONTR. NO. N40080–17–R–0002
NAVFAC DRAWING NO. 13080253
SHEET 195 OF 206
EA113

DRAWFORM REVISION: 10 MARCH 2009

FILE NAME: G:\PHPA\100863_009_FY16_Repair_Runways_\CADD\Phase 3\Electrical_Phase 3\10-0863-009-EA113.dwg LAYOUT NAME: EA113 PARTIAL SITE PLAN - CONSTRUCTION PLOTTED: Tuesday, September 27, 2016 - 4:04pm USER: rhurst

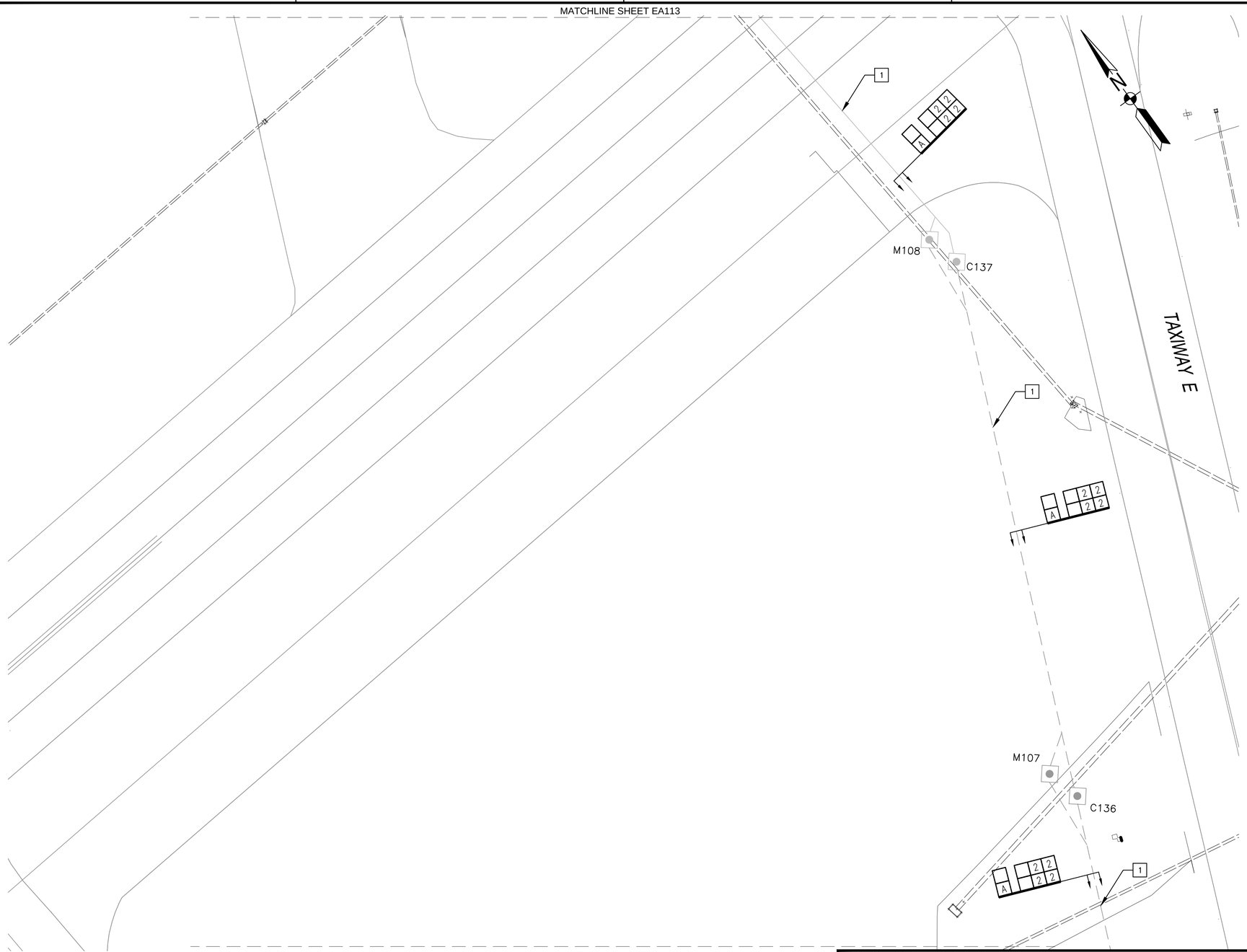

CONSTRUCTION NOTES

1. EXISTING AIRFIELD LIGHTING DUCTBANK, ROUTE 2-#6 AWG L-824B CABLES, 1 CIRCUIT (2 CABLES) PER 2" DUCT, FOR THE FOLLOWING CIRCUITS:
   - RUNWAY 6-24 CENTERLINE LIGHTS, CIRCUIT 1
   - RUNWAY 6-24 CENTERLINE LIGHTS, CIRCUIT 2
   - RUNWAY 6-24 EDGE LIGHTS, CIRCUIT 1
   - RUNWAY 6-24 EDGE LIGHTS, CIRCUIT 2

CONSTRUCTION LEGEND

- EXISTING DUCT BANK
- EXISTING MANHOLE/HANDHOLE

KEY MAP

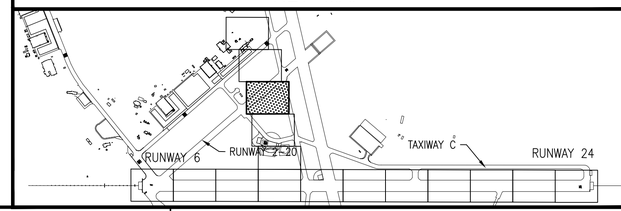

GRAPHIC SCALE

1"=50' 0 50' 100' 200'

SYM	DESCRIPTION	DATE	APPR

NAVFAC

Professional Certification
I HEREBY CERTIFY THAT THESE DOCUMENTS WERE PREPARED OR APPROVED BY ME, AND THAT I AM A DULY LICENSED PROFESSIONAL ENGINEER UNDER THE LAWS OF THE STATE OF MARYLAND, LICENSE NO. 24789, EXPIRATION DATE: 07/05/17.
SEAL

JOHNSON, MIRMIRAN & THOMPSON
Gannett Fleming
A Joint Venture
272 Bendix Road, Suite 260
Virginia Beach, Virginia, 23452
Telephone: (757) 499-1895
Web: www.jmt.com
A/E INFO

APPROVED
FOR COMMANDER NAVFAC

ACTIVITY
JAMES FLETCHER PER CHECKLIST
SATISFACTORY TO DATE 9/27/2016

DES RCH DRW RCH CHK DJP
PM/DM RH
BRANCH MANAGER
CHIEF ENG/ARCH E. GALLAHER, PE

DEPARTMENT OF THE NAVY
NAVAL FACILITIES ENGINEERING COMMAND
WASHINGTON, D.C.
NAVFAC WASHINGTON
IPT BLUE
NAVAL AIR STATION PATUXENT RIVER
PATUXENT RIVER, MARYLAND
FY16 SPECIAL PROJECT RM12-2137
REPAIR RUNWAYS 14-32 & 6-24 - PHASE 3
PARTIAL SITE PLAN - CONSTRUCTION

SCALE: AS NOTED
EPROJECT NO.: 1382138
CONSTR. CONTR. NO. N40080-17-R-0002
NAVFAC DRAWING NO. 13080254
SHEET 196 OF 206
EA114

DRAWFORM REVISION: 10 MARCH 2009

FILE NAME: G:\PHPA\100863_009_FY16_Repair_Runways_\CADD\Phase 3\Electrical_Phase 3\10-0863-009-EA114.dwg LAYOUT NAME: EA114 PARTIAL SITE PLAN - CONSTRUCTION PLOTTED: Tuesday, September 27, 2016 - 4:05pm USER: rhurst

MATCHLINE SHEET EA114

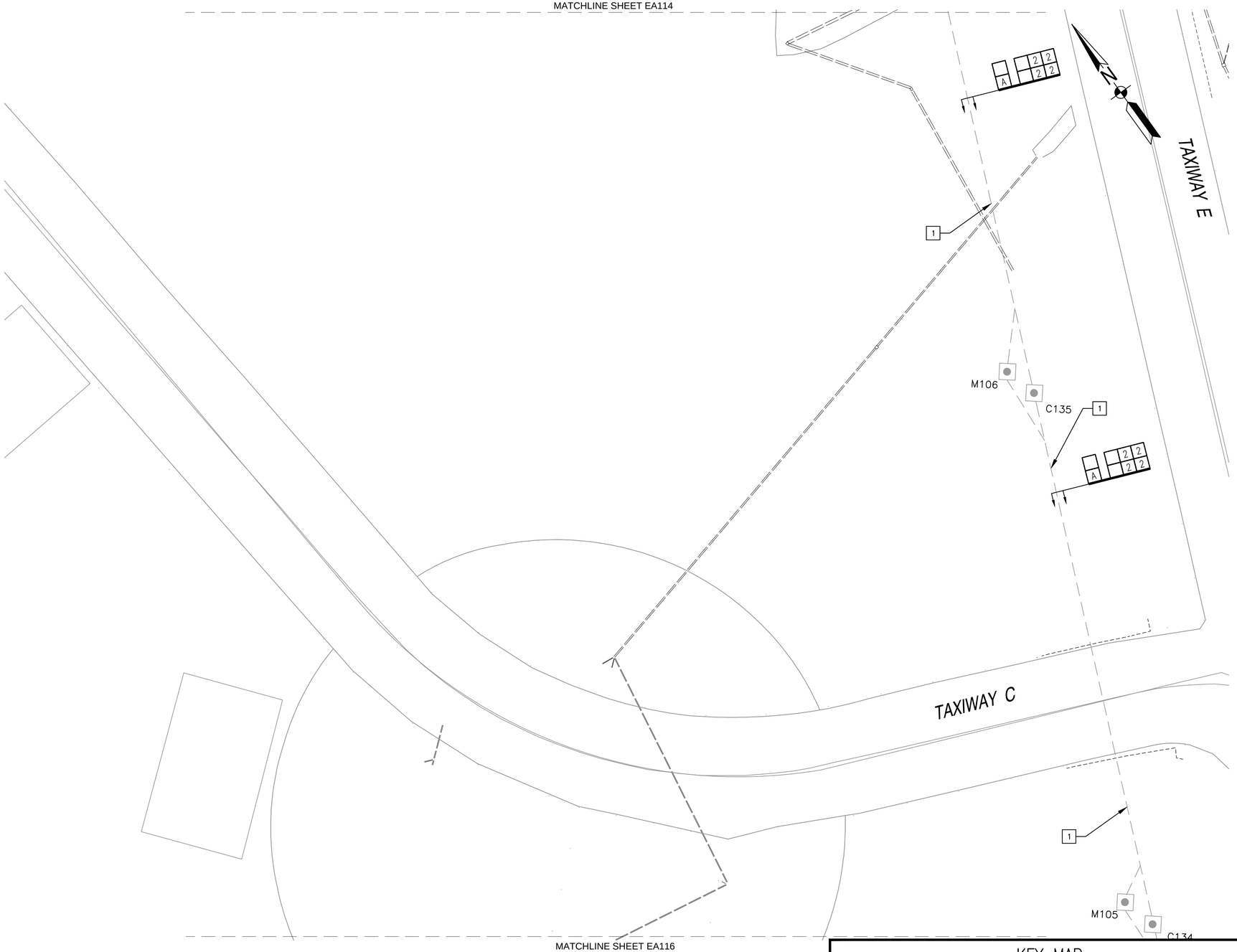

MATCHLINE SHEET EA116

CONSTRUCTION NOTES

1. EXISTING AIRFIELD LIGHTING DUCTBANK, ROUTE 2-#6 AWG L-824B CABLES, 1 CIRCUIT (2 CABLES) PER 2" DUCT, FOR THE FOLLOWING CIRCUITS:
   - RUNWAY 6-24 CENTERLINE LIGHTS, CIRCUIT 1
   - RUNWAY 6-24 CENTERLINE LIGHTS, CIRCUIT 2
   - RUNWAY 6-24 EDGE LIGHTS, CIRCUIT 1
   - RUNWAY 6-24 EDGE LIGHTS, CIRCUIT 2

CONSTRUCTION LEGEND

- EXISTING DUCT BANK
- EXISTING MANHOLE/HANDHOLE

KEY MAP

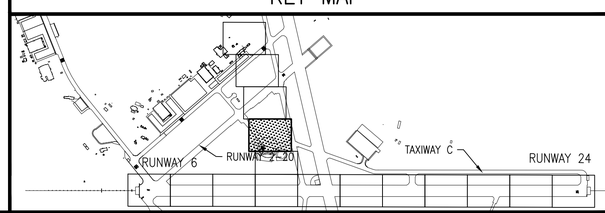

GRAPHIC SCALE

1"=50'

0 50' 100' 200'

SYM	DESCRIPTION	DATE	APPR

NAVFAC

STATE OF MARYLAND — JONATHAN D. JUSTICE — No. 24729 — PROFESSIONAL ENGINEER

Professional Certification

I HEREBY CERTIFY THAT THESE DOCUMENTS WERE PREPARED OR APPROVED BY ME, AND THAT I AM A DULY LICENSED PROFESSIONAL ENGINEER UNDER THE LAWS OF THE STATE OF MARYLAND, LICENSE NO. 24729, EXPIRATION DATE: 07/05/17.

SEAL

JOHNSON, MIRMIRAN & THOMPSON
Gannett Fleming
A Joint Venture
272 Bendix Road, Suite 260
Virginia Beach, Virginia, 23452
Telephone: (757) 499-1895
Web: www.jmt.com

A/E INFO

APPROVED

FOR COMMANDER NAVFAC

ACTIVITY

JAMES FLETCHER PER CHECKLIST

SATISFACTORY TO DATE 9/27/2016

DES. RCH DRW RCH CHK DJP

PM/DM RH

BRANCH MANAGER

CHIEF ENG/ARCH E. GALLAHER, PE

DEPARTMENT OF THE NAVY
NAVAL FACILITIES ENGINEERING COMMAND
NAVFAC WASHINGTON
WASHINGTON, D.C.
NAVAL AIR STATION PATUXENT RIVER
PATUXENT RIVER, MARYLAND

FY16 SPECIAL PROJECT RM12-2137
REPAIR RUNWAYS 14-32 & 6-24 - PHASE 3

PARTIAL SITE PLAN - CONSTRUCTION

IPT BLUE

SCALE:	AS NOTED
EPROJECT NO.:	1382138
CONSTR. CONTR. NO.	N40080-17-R-0002
NAVFAC DRAWING NO.	13080255
SHEET	197 OF 206

EA115

DRAWFORM REVISION: 10 MARCH 2009

FILE NAME: G:\PHPA\100863_009_FY16_Repair_Runways_\CADD\Phase 3\Electrical_Phase 3\10-0863-009-EA115.dwg LAYOUT NAME: EA115 PARTIAL SITE PLAN - CONSTRUCTION PLOTTED: Tuesday, September 27, 2016 - 4:25pm USER: rhurst

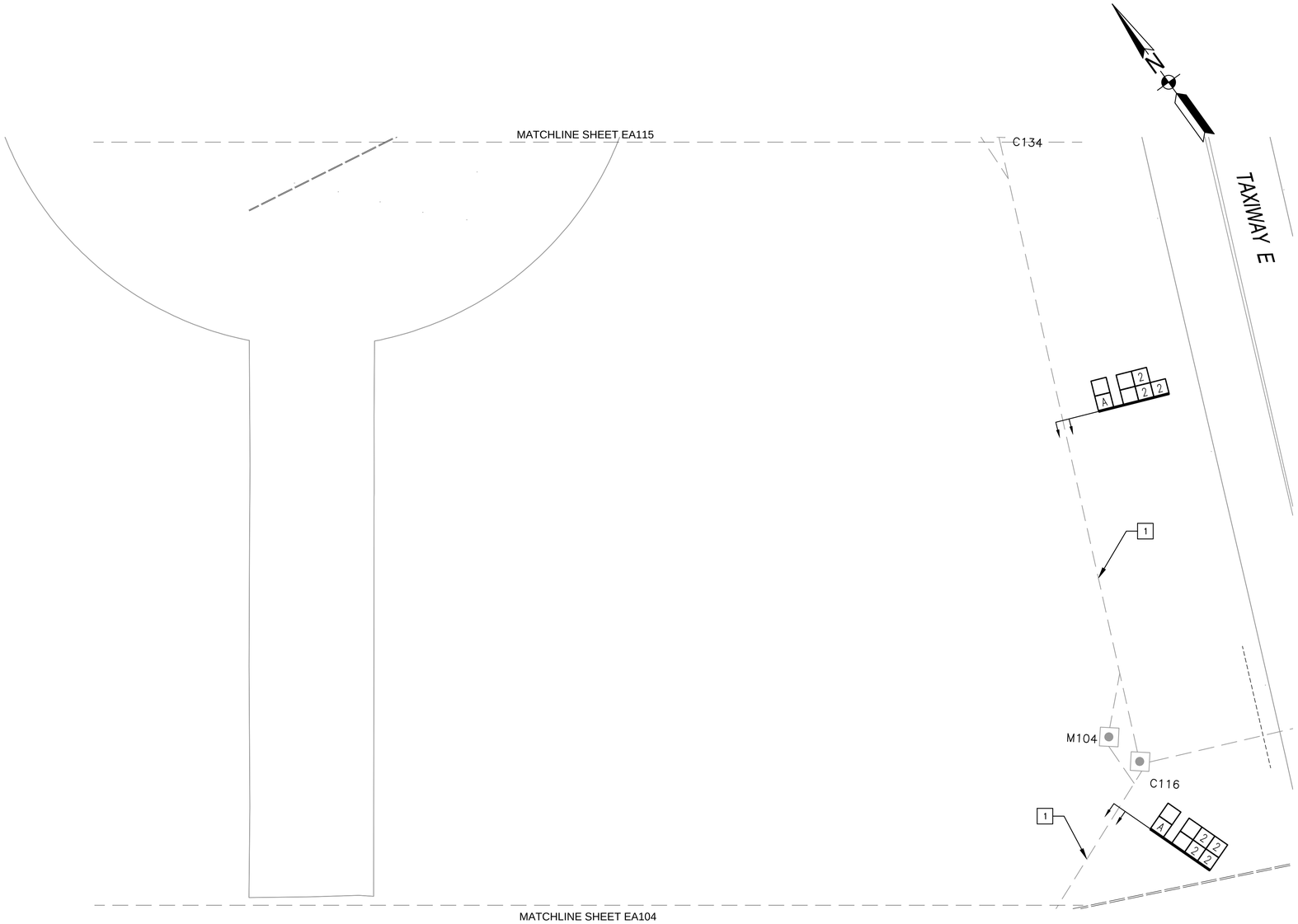

CONSTRUCTION NOTES

1. EXISTING AIRFIELD LIGHTING DUCTBANK, ROUTE 2-#6 AWG L-824B CABLES, 1 CIRCUIT (2 CABLES) PER 2" DUCT, FOR THE FOLLOWING CIRCUITS:
   - RUNWAY 6-24 CENTERLINE LIGHTS, CIRCUIT 1
   - RUNWAY 6-24 CENTERLINE LIGHTS, CIRCUIT 2
   - RUNWAY 6-24 EDGE LIGHTS, CIRCUIT 1
   - RUNWAY 6-24 EDGE LIGHTS, CIRCUIT 2

CONSTRUCTION LEGEND

- EXISTING DUCT BANK
- EXISTING MANHOLE/HANDHOLE

KEY MAP

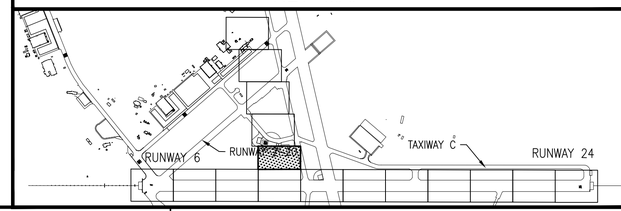

GRAPHIC SCALE

1"=50'

0 50' 100' 200'

SYM	DESCRIPTION	DATE	APPR

NAVFAC

STATE OF MARYLAND — JONATHAN D. PIERCE — No. 24729 — PROFESSIONAL ENGINEER

Professional Certification
I HEREBY CERTIFY THAT THESE DOCUMENTS WERE PREPARED OR APPROVED BY ME, AND THAT I AM A DULY LICENSED PROFESSIONAL ENGINEER UNDER THE LAWS OF THE STATE OF MARYLAND, LICENSE NO. 24729, EXPIRATION DATE: 07/05/17.
SEAL

JOHNSON, MIRMIRAN & THOMPSON
Gannett Fleming
A Joint Venture
272 Bendix Road, Suite 260
Virginia Beach, Virginia, 23452
Telephone: (757) 499-1895
Web: www.jmt.com
A/E INFO

APPROVED

FOR COMMANDER NAVFAC

ACTIVITY

JAMES FLETCHER PER CHECKLIST
SATISFACTORY TO DATE 9/27/2016

DES RCH DRW RCH CHK DJP
PM/DM RH
BRANCH MANAGER
CHIEF ENG/ARCH E. GALLAHER, PE

DEPARTMENT OF THE NAVY — NAVAL FACILITIES ENGINEERING COMMAND — WASHINGTON, D.C.
NAVFAC WASHINGTON
IPT BLUE
NAVAL AIR STATION PATUXENT RIVER — PATUXENT RIVER, MARYLAND

FY16 SPECIAL PROJECT RM12-2137
REPAIR RUNWAYS 14-32 & 6-24 - PHASE 3

PARTIAL SITE PLAN - CONSTRUCTION

SCALE: AS NOTED
EPROJECT NO.: 1382138
CONSTR. CONTR. NO. N40080-17-R-0002
NAVFAC DRAWING NO. 13080256
SHEET 198 OF 206

EA116

DRAWFORM REVISION: 10 MARCH 2009

FILE NAME: G:\PHPA\100863_009_FY16_Repair_Runways_\CADD\Phase 3\Electrical_Phase 3\10-0863-009-EA116.dwg LAYOUT NAME: EA116 PARTIAL SITE PLAN - CONSTRUCTION PLOTTED: Tuesday, September 27, 2016 - 4:24pm USER: rhurst

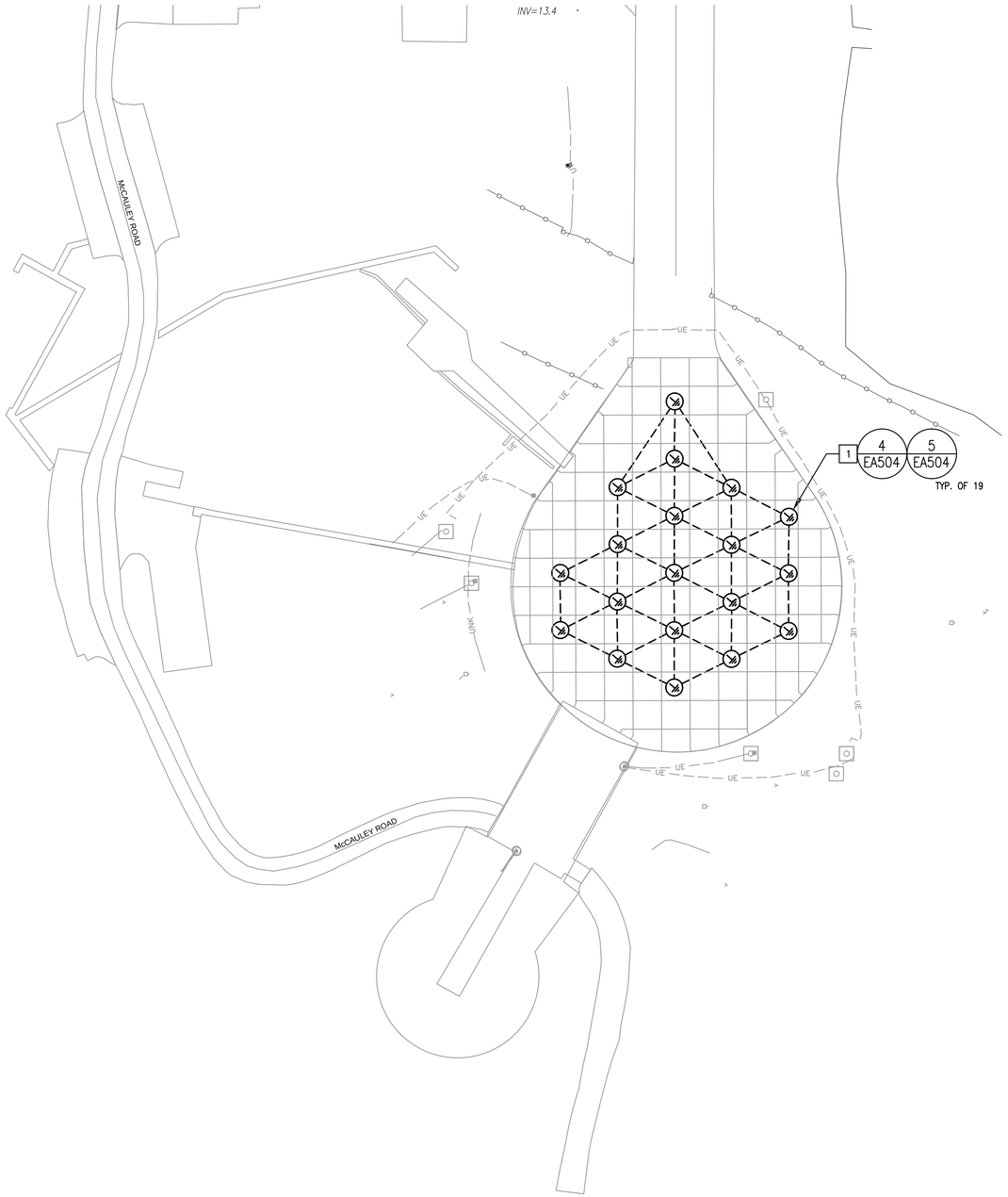

CONSTRUCTION NOTES

1. INSTALL STATIC GROUNDING RECEPTACLE, TYPICAL OF 19, EXOTHERMICALLY WELD ALL RECEPTACLES TOGETHER WITH A #1/0 AWG BARE COPPER GROUND WIRE.

PHASING NOTE

ALL WORK ON THIS SHEET SHALL BE .

CONSTRUCTION LEGEND

- - - - #1/0 AWG BARE COPPER GROUND WIRE

STATIC GROUNDING RECEPTACLE

KEY MAP

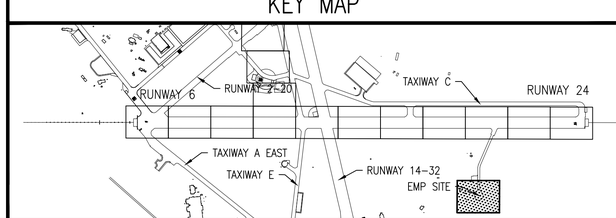

GRAPHIC SCALE

1"=50'

0 50' 100' 200'

SYM	DESCRIPTION	DATE	APPR

NAVFAC

Professional Certification

I HEREBY CERTIFY THAT THESE DOCUMENTS WERE PREPARED OR APPROVED BY ME, AND THAT I AM A DULY LICENSED PROFESSIONAL ENGINEER UNDER THE LAWS OF THE STATE OF MARYLAND, LICENSE NO. 24789, EXPIRATION DATE: 07/05/17.

SEAL

JOHNSON, MIRMIRAN & THOMPSON
Gannett Fleming
A Joint Venture
272 Bendix Road, Suite 260
Virginia Beach, Virginia, 23452
Telephone: (757) 499-1895
Web: www.jmt.com

A/E INFO

APPROVED

FOR COMMANDER NAVFAC

ACTIVITY

JAMES FLETCHER PER CHECKLIST

SATISFACTORY TO DATE 9/27/2016

DES: VALUE DRW: VALUE CHK: VALUE

PM/DM RH

BRANCH MANAGER

CHIEF ENG/ARCH E. GALLAHER, PE

DEPARTMENT OF THE NAVY
NAVAL FACILITIES ENGINEERING COMMAND
NAVFAC WASHINGTON
WASHINGTON, D.C.
NAVAL AIR STATION PATUXENT RIVER
PATUXENT RIVER, MARYLAND
IPT BLUE

FY16 SPECIAL PROJECT RM12-2137
REPAIR RUNWAYS 14-32 & 6-24 - PHASE 3

PARTIAL SITE PLAN – CONSTRUCTION

SCALE: AS NOTED

EPROJECT NO.: 1382138

CONSTR. CONTR. NO. N40080-17-R-0002

NAVFAC DRAWING NO. 13080257

SHEET 199 OF 206

EA117

DRAWFORM REVISION: 10 MARCH 2009

FILE NAME: G:\PHPA\100863_009_FY16_Repair_Runways_\CADD\Phase 3\Electrical_Phase 3\10-0863-009-EA117.dwg LAYOUT NAME: EA117 PARTIAL SITE PLAN - CONSTRUCTION PLOTTED: Tuesday, September 27, 2016 - 4:07pm USER: rhurst

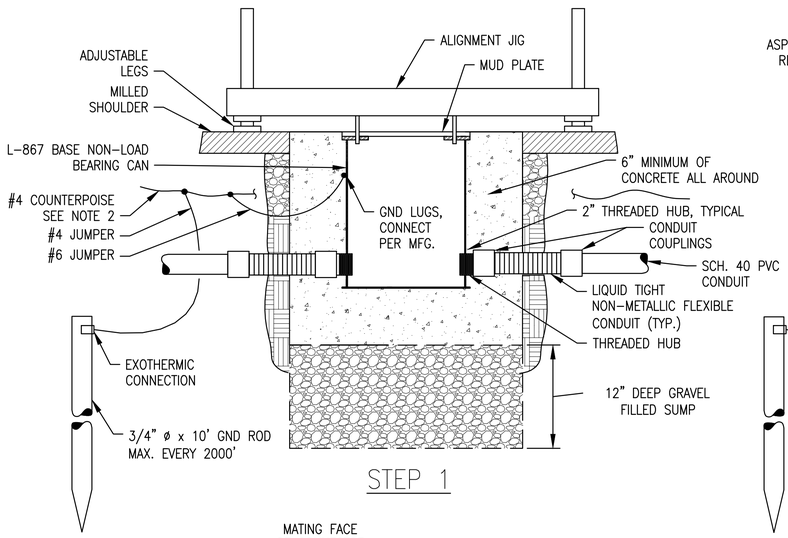

STEP 1

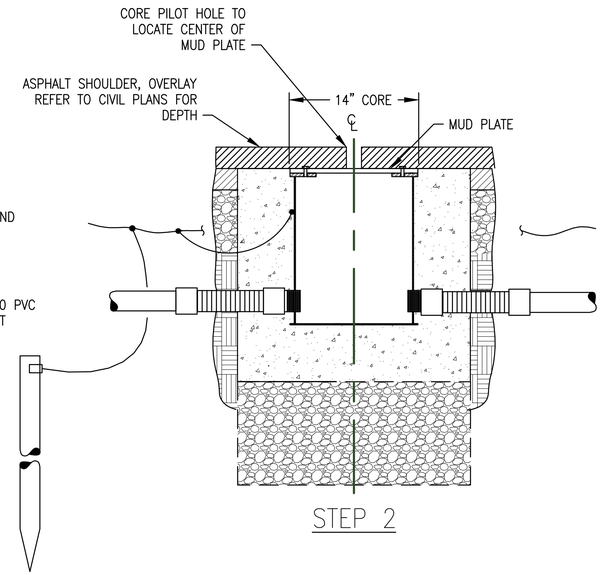

STEP 2

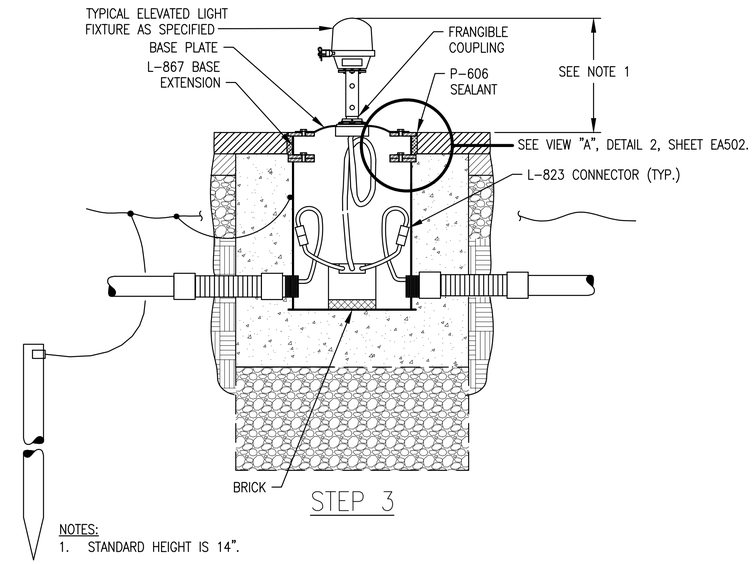

STEP 3

NOTES:

1. STANDARD HEIGHT IS 14".
2. ROUTE COUNTERPOISE AROUND EXTERIOR OF CONCRETE ENCASEMENT TOWARDS FULL STRENGTH PAVEMENT. ALL LIGHT FIXTURES MOUNTED IN FULL STRENGTH OR SHOULDER PAVEMENT SHALL BE CONNECTED TO THE COUNTERPOISE SYSTEM. MAINTAIN 12" MINIMUM DISTANCE BETWEEN BASE AND COUNTERPOISE.

BASEMOUNTED ELEVATED RUNWAY OR TAXIWAY EDGE LIGHT FIXTURE INSTALLATION

NTS EA101–EA111 (1)

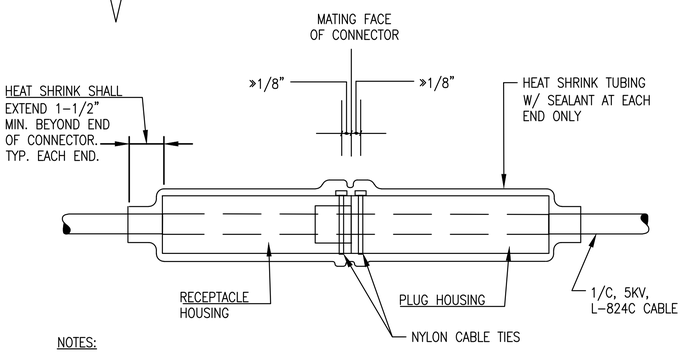

NOTES:

1. INTERIOR PIN AND SOCKETS ARE NOT SHOWN FOR CLARITY.
2. ATTACH EACH CABLE TIE >>1/8" FROM THE MATING FACE OF THE CONNECTOR HOUSING. TIGHTEN CABLE TIE ENOUGH TO HOLD IN PLACE WITHOUT COMPRESSING HOUSING. TRIM OFF EXCESS CABLE TIE.
3. INSTALLATION OF L-823 AND HEAT SHRINK TUBING SHALL BE IN STRICT CONFORMANCE WITH MANUFACTURERS REQUIREMENTS.

FIELD ATTACHED PLUG-IN SPLICE FAA TYPE L-823

NTS EA501 (2)

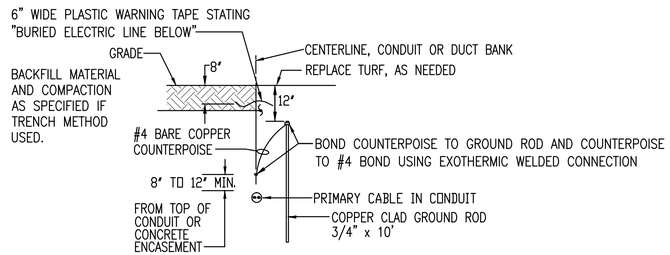

COUNTERPOISE AND GROUND ROD INSTALLTION DETAIL

NTS EA101–EA111 (3)

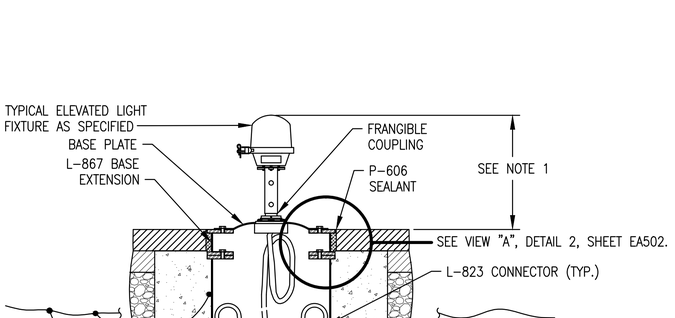

NOTES:

1. WHEN MORE THAN ONE DUCT/CONDUIT IS INSTALLED, MAINTAIN A MINIMUM SEPARATION BETWEEN DUCTS/CONDUITS OF 3".

DIRECT BURIED UNDER RUNWAY, TAXIWAY OR SHOULDER CONDUIT DETAIL

NTS EA101–EA111 (4)

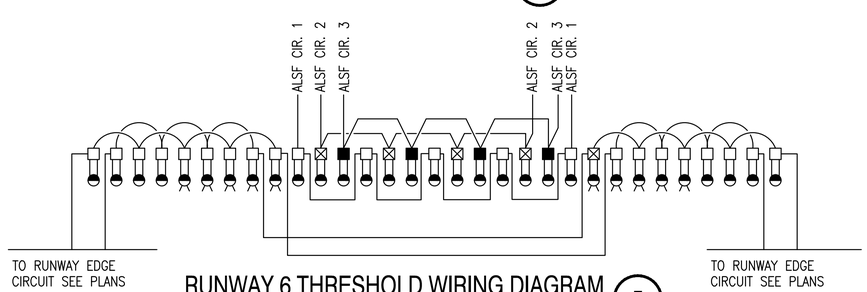

RUNWAY 6 THRESHOLD WIRING DIAGRAM

NTS EA501 (5)

SYM	DESCRIPTION	DATE	APPR

NAVFAC

Professional Certification
I HEREBY CERTIFY THAT THESE DOCUMENTS WERE PREPARED OR APPROVED BY ME, AND THAT I AM A DULY LICENSED PROFESSIONAL ENGINEER UNDER THE LAWS OF THE STATE OF MARYLAND, LICENSE NO. 24789.
EXPIRATION DATE: 07/05/17.
SEAL

JOHNSON, MIRMIRAN & THOMPSON
Gannett Fleming
A Joint Venture
272 Bendix Road, Suite 260
Virginia Beach, Virginia, 23452
Telephone: (757) 499-1895
Web: www.jmt.com

A/E INFO

APPROVED
FOR COMMANDER NAVFAC
ACTIVITY
JAMES FLETCHER PER CHECKLIST
SATISFACTORY TO DATE 9/27/2016
DES RCH DRW RCH CHK DJP
PM/DM RH
BRANCH MANAGER
CHIEF ENG/ARCH E. GALLAHER, PE

DEPARTMENT OF THE NAVY
NAVAL FACILITIES ENGINEERING COMMAND
WASHINGTON, D.C.
NAVFAC WASHINGTON
NAVAL AIR STATION PATUXENT RIVER
PATUXENT RIVER, MARYLAND
FY16 SPECIAL PROJECT RM12-2137
REPAIR RUNWAYS 14-32 & 6-24 - PHASE 3
ELECTRICAL DETAILS
IPT BLUE

SCALE: AS NOTED
EPROJECT NO.: 1382138
CONSTR. CONTR. NO. N40080-17-R-0002
NAVFAC DRAWING NO. 13080258
SHEET 200 OF 206
EA501

DRAWFORM REVISION: 10 MARCH 2009

FILE NAME: G:\PHPA\100863_009_FY16_Repair_Runways_\2400\Phase 3\Electrical_Phase 3\10-0863-009-EA501.dwg LAYOUT NAME: EA501 ELECTRICAL DETAILS PLOTTED: Tuesday, September 27, 2016 - 4:07pm USER: rhurst

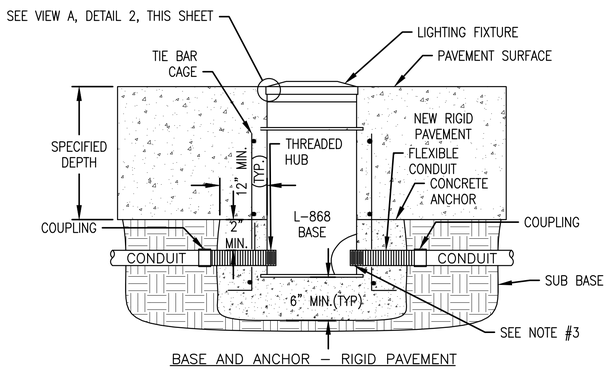

BASE AND ANCHOR – RIGID PAVEMENT

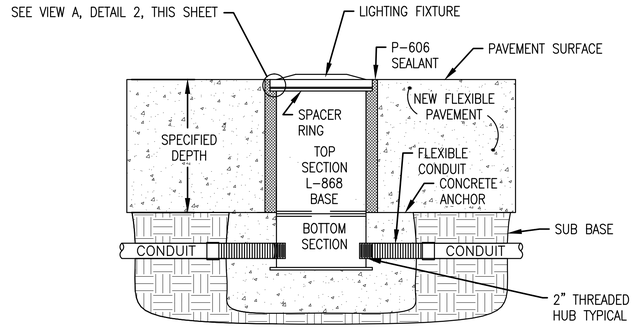

BASE AND ANCHOR – FLEXIBLE PAVEMENT

BASE AND ANCHOR DETAILS (NEW CONSTRUCTION) 1

NOT TO SCALE EA101–EA111

NOTES:

1. THE USE OF MUD PLATES, SPACER RINGS, EXTENSIONS, ETC., IS DEPENDANT ON PAVING TECHNIQUES.
2. ORIENTATION TOLERANCE FOR THE BASE IS ±1/2 DEGREE FROM THE CENTERLINE SHOWN ON THE PLANS.
3. MINIMUM 12" LONG CONDUIT STUB, BASE SHALL HAVE 2" THEADED HUB, TYPICAL.

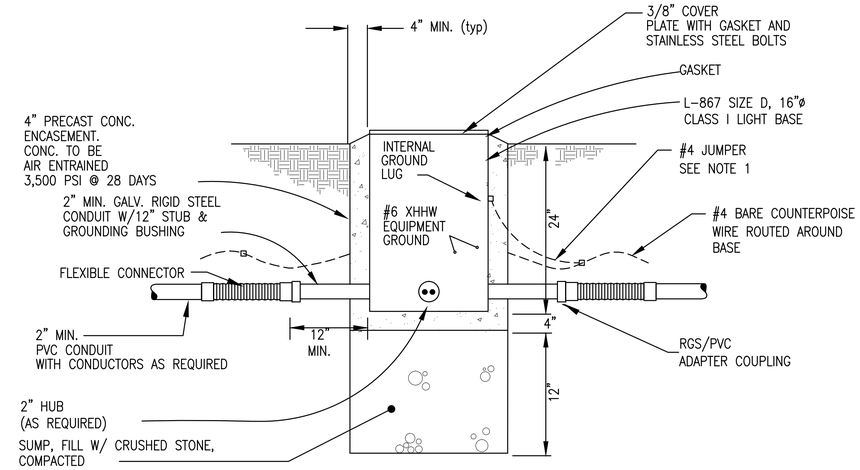

L-867 SIZE D HANDHOLE 3

NTS EA101–EA111

NOTES:

1. CONNECT LIGHT BASE TO COUNTERPOISE WITH A #4 COPPER JUMPER FROM EXTERNAL GROUND LUG ON BASE.
2. THE FLEXIBLE CONNECTOR SHALL BE LIQUID TIGHT NON–METALLIC.

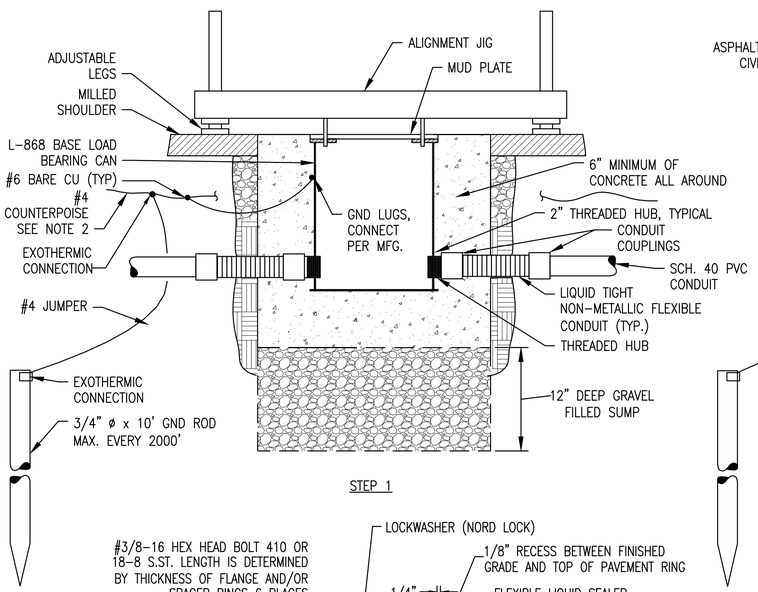

STEP 1

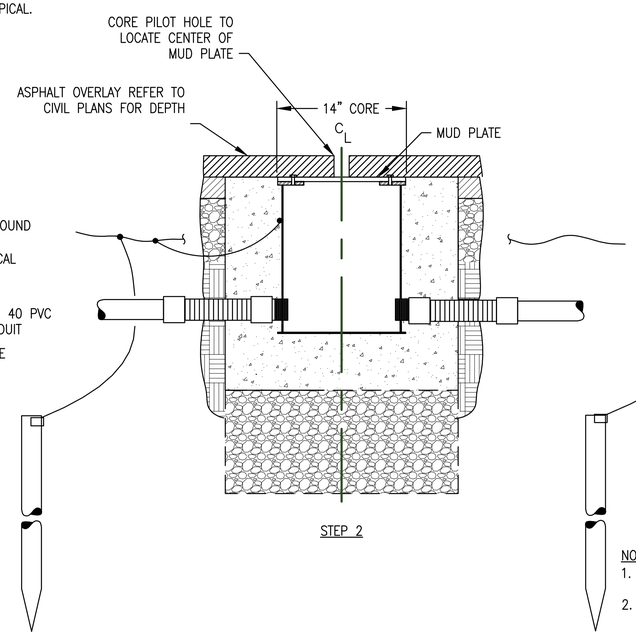

STEP 2

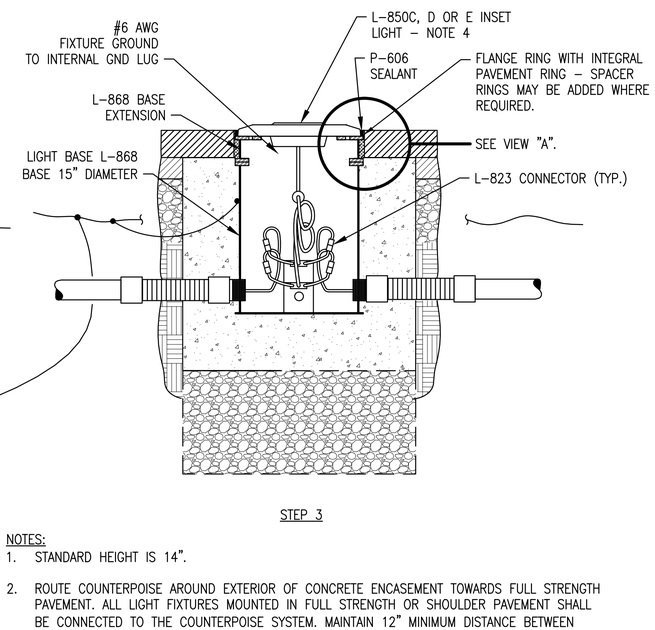

STEP 3

NOTES:

1. STANDARD HEIGHT IS 14".
2. ROUTE COUNTERPOISE AROUND EXTERIOR OF CONCRETE ENCASEMENT TOWARDS FULL STRENGTH PAVEMENT. ALL LIGHT FIXTURES MOUNTED IN FULL STRENGTH OR SHOULDER PAVEMENT SHALL BE CONNECTED TO THE COUNTERPOISE SYSTEM. MAINTAIN 12" MINIMUM DISTANCE BETWEEN BASE AND COUNTERPOISE.
3. GROUND ALL BASE CANS WITH #6 BARE COPPER JUMPER EXOTHERMICALLY WELDED TO COUNTERPOISE AND BOLTED TO LIGHT CAN.
4. COORDINATE DIAMETER AND BOLT HOLE PATTERN OF EXISTING FIXTURES THAT ARE REUSED WITH FLANGE RING.

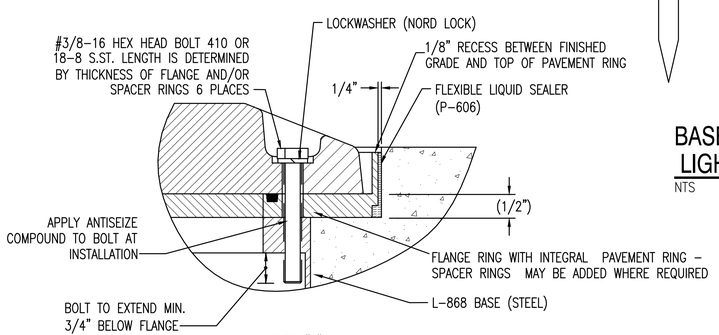

VIEW "A"

BASEMOUNTED SEMI-FLUSH RUNWAY OR TAXIWAY LIGHT FIXTURE INSTALLATION (DEEP BASE) 2

NTS EA101–EA111

SYM	DESCRIPTION	DATE	APPR

NAVFAC

Professional Certification
I HEREBY CERTIFY THAT THESE DOCUMENTS WERE PREPARED OR APPROVED BY ME, AND THAT I AM A DULY LICENSED PROFESSIONAL ENGINEER UNDER THE LAWS OF THE STATE OF MARYLAND, LICENSE NO. 24789, EXPIRATION DATE: 07/05/17. SEAL

JOHNSON, MIRMIRAN & THOMPSON
Gannett Fleming
A Joint Venture
272 Bendix Road, Suite 260
Virginia Beach, Virginia, 23452
Telephone: (757) 499–1895
Web: www.jmt.com
A/E INFO

APPROVED
FOR COMMANDER NAVFAC
ACTIVITY
JAMES FLETCHER PER CHECKLIST
SATISFACTORY TO DATE 9/27/2016
DES RCH DRW RCH CHK DJP
PM/DM RH
BRANCH MANAGER
CHIEF ENG/ARCH E. GALLAHER, PE

DEPARTMENT OF THE NAVY — NAVAL FACILITIES ENGINEERING COMMAND WASHINGTON, D.C.
NAVFAC WASHINGTON
NAVAL AIR STATION PATUXENT RIVER — PATUXENT RIVER, MARYLAND
FY16 SPECIAL PROJECT RM12-2137
REPAIR RUNWAYS 14-32 & 6-24 - PHASE 3
ELECTRICAL DETAILS

IPT BLUE

SCALE: AS NOTED
EPROJECT NO.: 1382138
CONSTR. CONTR. NO. N40080-17-R-0002
NAVFAC DRAWING NO. 13091634
SHEET 201 OF 206
EA502

DRAWFORM REVISION: 10 MARCH 2009

FILE NAME: G:\PHPA\100863_009_FY16_Repair_Runways_\CADD\Phase 3\Electrical_Phase 3\10-0863-009-EA502.dwg LAYOUT NAME: EA502 ELECTRICAL DETAILS PLOTTED: Tuesday, September 27, 2016 - 4:07pm USER: rhurst

NOTES:

1. CONNECT COUNTERPOISE TO GROUND ROD AT BASE.
2. RUNWAY DISTANCE TO GO SIGNS ARE MOUNTED 75 FEET FROM THE OUTSIDE EDGE OF THE RUNWAY EDGE MARKING.
3. INSTALL ARRESTING GEAR MARKER 100 FEET FROM RUNWAY 6-24 EDGE.

THE INSTALLATION OF THE MARKERS AND MARKINGS SHALL BE AS FOLLOWS:

A. THE BASES OF THE ARRESTING GEAR MARKERS SHALL BE NOT LESS THAN 6 INCHES ABOVE THE GROUND.

B. THE TOP OF THE MARKER SHALL BE NOT MORE THAN 57 ±3 INCHES ABOVE THE NEAR RUNWAY EDGE AT THE POSITION.

C. THE AXES OF THE MARKERS SHALL BE AT RIGHT ANGLES ±2 DEGREES TO THE RUNWAY CENTERLINE AND ALONG THE LINES CONNECTING THE PAIRS OF MARKERS.

D. INDIVIDUAL MARKERS MAY HAVE A 1-FOOT TOLERANCE FROM THE LINE ALONG THE DECK PENDANT.

E. THE FACES OF THE SIGNS SHALL BE VERTICAL ±2 DEGREES.

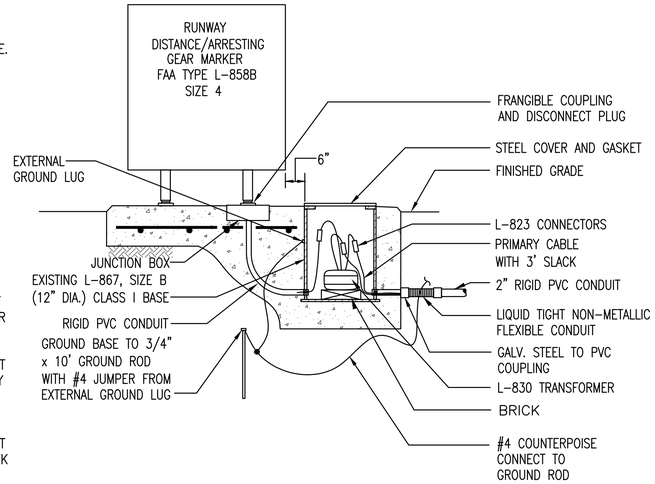

AIRFIELD GUIDANCE SIGN DETAIL (1)

NTS EA101-EA111

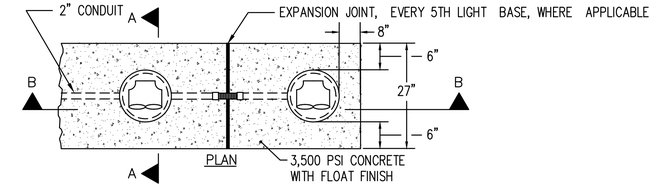

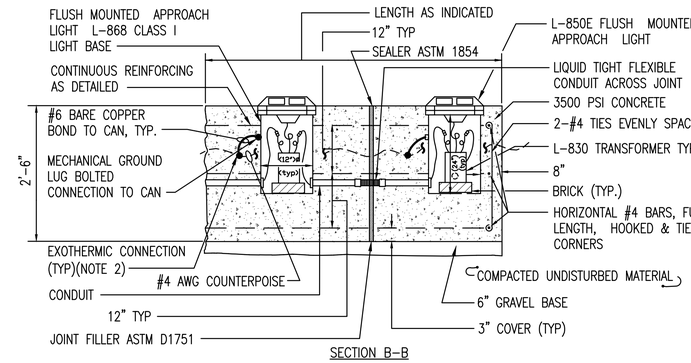

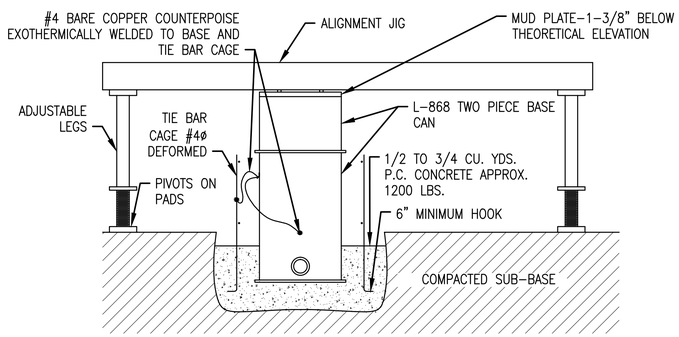

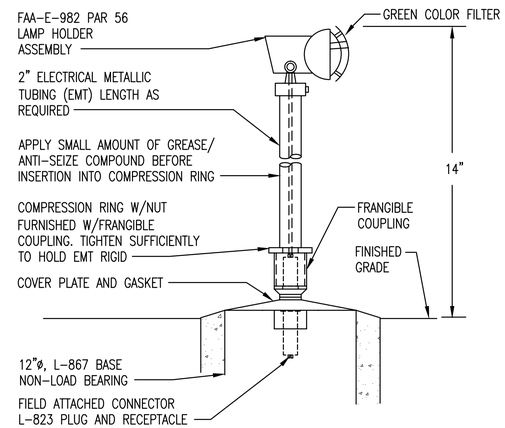

TYPICAL ELEVATED HIGH INTENSITY THRESHOLD LIGHT DETAIL (2)

NTS EA101,EA111

NOTES:

1. EXPANSION JOINT SHALL BE INSTALLED AFTER EVERY FIFTH LIGHT WHERE CONTINUOUS LIGHT BAR IS USED (I.E., THRESHOLD BAR)
2. EACH LIGHT BASE SHALL BE BONDED TO THE HORIZONTAL BAR BY ATTACHING A #6 JUMPER TO AN EXTERNAL GROUND LUG ON THE BASE AND CONNECTING TO THE COUNTERPOISE USING AN EXOTHERMIC WELD.

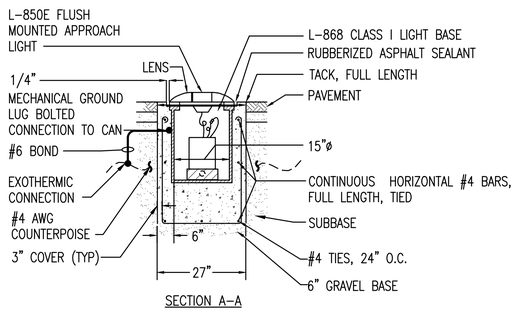

TYPICAL SEMIFLUSH HIGH INTENSITY THRESHOLD LIGHT FOUNDATION DETAIL (3)

NTS EA101,EA111

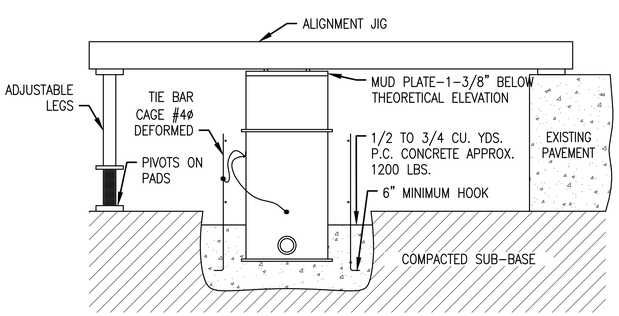

DEEP BASE INSTALLATION (NEW CONSTRUCTION), RIGID PAVEMENT (4)

NOT TO SCALE EA101-EA102, EA110-EA111

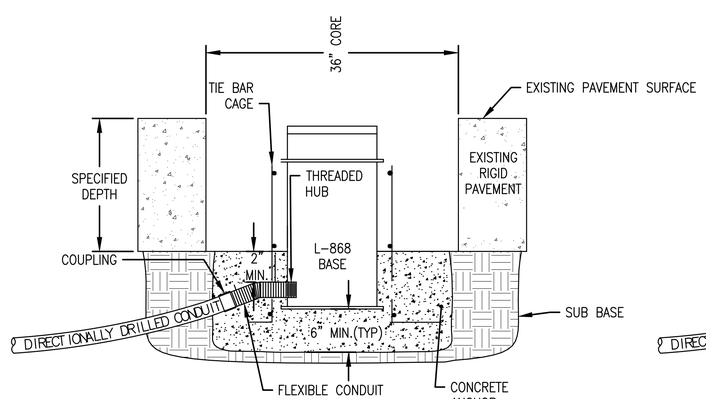

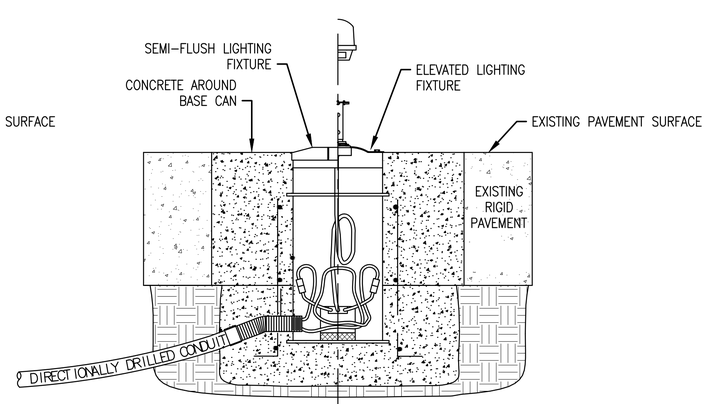

BASE AND ANCHOR DETAILS (CORE DRILL EXISTING PCC) (5)

NOT TO SCALE EA101-EA102, EA110-EA111

SYM	DESCRIPTION	DATE	APPR

NAVFAC

Professional Certification
I HEREBY CERTIFY THAT THESE DOCUMENTS WERE PREPARED OR APPROVED BY ME, AND THAT I AM A DULY LICENSED PROFESSIONAL ENGINEER UNDER THE LAWS OF THE STATE OF MARYLAND, LICENSE NO. 24789, EXPIRATION DATE: 07/01/17.
SEAL

JOHNSON, MIRMIRAN & THOMPSON
Gannett Fleming
A Joint Venture
272 Bendix Road, Suite 260
Virginia Beach, Virginia, 23452
Telephone: (757) 499-1895
Web: www.jmt.com

A/E INFO

APPROVED
FOR COMMANDER NAVFAC
ACTIVITY
JAMES FLETCHER PER CHECKLIST
SATISFACTORY TO DATE 9/27/2016
DES RCH DRW RCH CHK DJP
PM/DM RH
BRANCH MANAGER
CHIEF ENG/ARCH E. GALLAHER, PE

DEPARTMENT OF THE NAVY
NAVAL FACILITIES ENGINEERING COMMAND WASHINGTON, D.C.
NAVFAC WASHINGTON
NAVAL AIR STATION PATUXENT RIVER
PATUXENT RIVER, MARYLAND
PT. BLUE
FY16 SPECIAL PROJECT RM12-2137
REPAIR RUNWAYS 14-32 & 6-24 - PHASE 3
ELECTRICAL DETAILS

SCALE: AS NOTED
EPROJECT NO.: 1382138
CONSTR. CONTR. NO. N40080-17-R-0002
NAVFAC DRAWING NO. 13091635
SHEET 202 OF 206
EA503

DRAWFORM REVISION: 10 MARCH 2009

FILE NAME: G:\PHPA\108863_009_FY16_Repair_Runways_\CADD\Phase 3\Electrical_Phase 3\10-0863-009-EA503.dwg LAYOUT NAME: EA503 ELECTRICAL DETAILS PLOTTED: Tuesday, September 27, 2016 - 4:08pm USER: rhurst

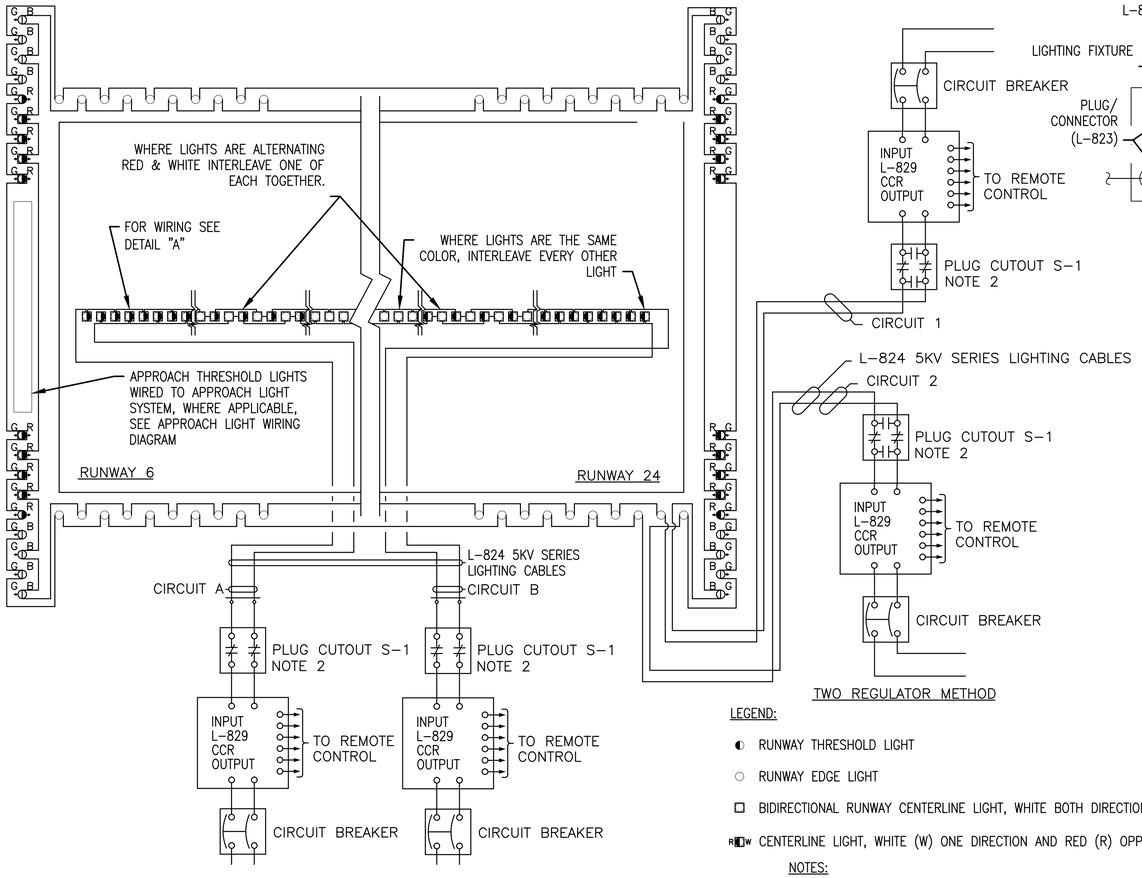

TYPICAL INTERLEAVED CIRCUIT RUNWAY LIGHTING WIRING DIAGRAM

NOT TO SCALE — EA101–EA111 — (1)

TWO REGULATOR METHOD

LEGEND:

- RUNWAY THRESHOLD LIGHT
- RUNWAY EDGE LIGHT
- BIDIRECTIONAL RUNWAY CENTERLINE LIGHT, WHITE BOTH DIRECTIONS
- R W CENTERLINE LIGHT, WHITE (W) ONE DIRECTION AND RED (R) OPPOSITE DIRECTION

NOTES:

1. REFER TO SITE PLANS AND LIGHTING SCHEDULES FOR FIXTURE TYPES AND STYLES
2. S1 PLUG CUT OUT SHOWN WITH HANDLE INSERTED.
3. REFER TO SITE PLANS FOR CIRCUIT HOME RUN CONNECTION POINTS
4. REFER TO CIVIL DETAILS FOR THRESHOLD BAR CONSTRUCTION.

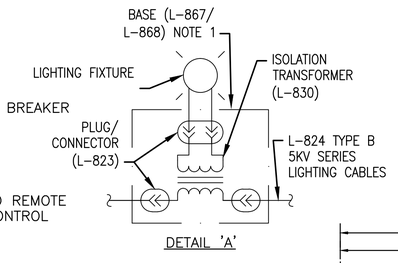

DETAIL 'A'

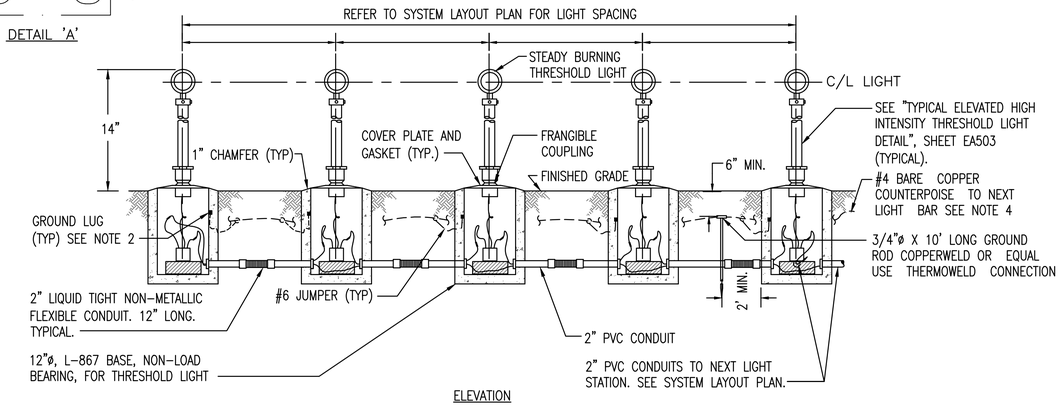

ELEVATION

NOTES:

1. ALL ELEVATED LIGHT FIXTURES SHALL BE PLACED ON A 12"ø L-867, NON-LOAD BEARING BASES.
2. EACH LIGHT BASE SHALL BE CONNECTED TO THE COUNTERPOISE BY BOLTING A #6 COPPER JUMPER TO AN EXTERNAL GROUND LUG ON THE BASE AND ATTACHING TO THE COUNTERPOISE USING AN EXOTHERMIC WELD.
3. ALL CONDUITS SHALL BE TERMINATED WITH A STANDARD GROUND BUSHING.
4. THE COUNTERPOISE SHALL BE KEPT A MINIMUM OF 2' AWAY FROM THE LIGHT BAR.

TYPICAL ELEVATED OUTBOARD THRESHOLD LIGHT DETAIL

NTS — EA101,EA111 — (2)

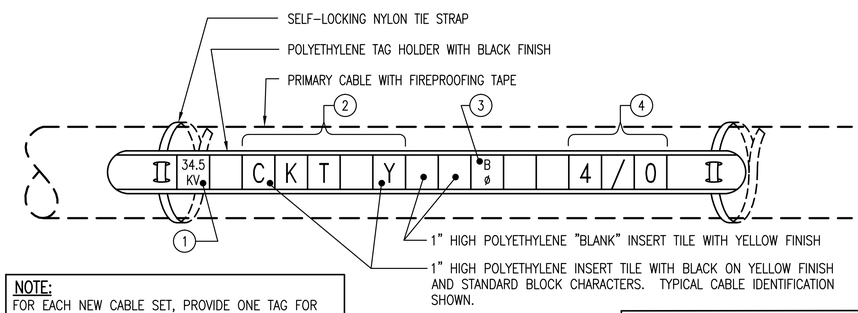

NOTE:
FOR EACH NEW CABLE SET, PROVIDE ONE TAG FOR EACH CONDUCTOR IN EACH MANHOLE, HANDHOLE AND/OR VAULT.

CABLE TAG DETAIL (TYPICAL)

NTS — EA101–EA111 — (3)

CABLE DESCRIPTION
(1) CIRCUIT'S ACTUAL VOLTAGE RATING.
(2) CIRCUIT'S ACTUAL DESIGNATION. SUBMIT COMPLETE AND PROPER SCHEDULE OF THE CIRCUIT DESIGNATIONS TO BE USED. PROVIDE DESCRIPTIONS FOR EACH MANHOLE INVOLVED.
(3) CABLE'S ACTUAL PHASE DESIGNATION.
(4) CABLE'S ACTUAL SIZE DESIGNATION.

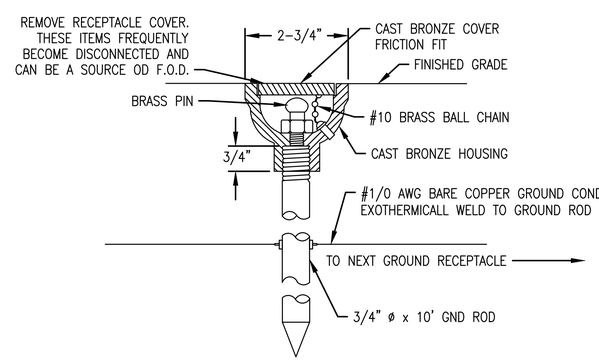

STATIC GROUNDING RECEPTACLE

NTS — EA504,EA117 — (4)

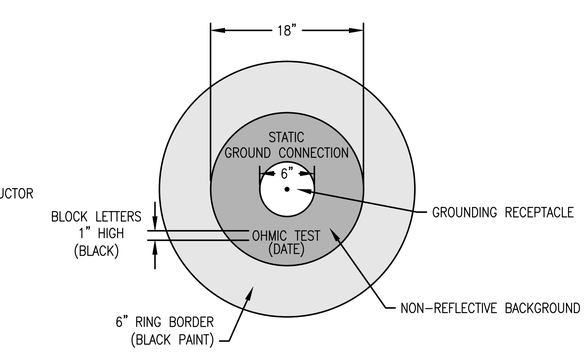

STATIC GROUNDING RECEPTACLE MARKING DETAIL

NTS — C-151,EA504,EA117 — (5)

NOTES:

1. GROUND POINT MARKINGS SHALL BE APPLIED AFTER GROUNDING POINT IS INSTALLED.
2. UPON INSTALLATION OF GROUND ROD, THE CONTRACTOR SHALL TEST PER SPECIFICATIONS. TEST RESULTS SHALL BE STENCILED ON THE PCC AT THE "OHMC TEST" LOCATION AND A PRINTED COPY SHALL BE PROVIDED TO THE CONTRACTING OFFICER.

SYM	DESCRIPTION	DATE	APPR

NAVFAC

STATE OF MARYLAND — JONATHAN D. PARKER — No. 24789 — PROFESSIONAL ENGINEER

Professional Certification
I HEREBY CERTIFY THAT THESE DOCUMENTS WERE PREPARED OR APPROVED BY ME, AND THAT I AM A DULY LICENSED PROFESSIONAL ENGINEER UNDER THE LAWS OF THE STATE OF MARYLAND, LICENSE NO. 24789, EXPIRATION DATE: 07/05/17. SEAL

JOHNSON, MIRMIRAN & THOMPSON
Gannett Fleming
A Joint Venture
272 Bendix Road, Suite 260
Virginia Beach, Virginia, 23452
Telephone: (757) 499-1895
Web: www.jmt.com
A/E INFO

APPROVED
FOR COMMANDER NAVFAC
ACTIVITY
JAMES FLETCHER PER CHECKLIST
SATISFACTORY TO DATE 9/27/2016
DES RCH DRW RCH CHK DJP
PM/DM RH
BRANCH MANAGER
CHIEF ENG/ARCH E. GALLAHER, PE

DEPARTMENT OF THE NAVY — NAVAL FACILITIES ENGINEERING COMMAND — WASHINGTON, D.C.
NAVFAC WASHINGTON
NAVAL AIR STATION PATUXENT RIVER — PATUXENT RIVER, MARYLAND
IPT BLUE
FY16 SPECIAL PROJECT RM12-2137
REPAIR RUNWAYS 14-32 & 6-24 - PHASE 3
ELECTRICAL DETAILS

SCALE: AS NOTED
EPROJECT NO.: 1382138
CONSTR. CONTR. NO.: N40080-17-R-0002
NAVFAC DRAWING NO.: 13091636
SHEET 203 OF 206
EA504

DRAWFORM REVISION: 10 MARCH 2009

FILE NAME: G:\PHPA\100863_009_FY16_Repair_Runways_\CADD\Phase 3\Electrical_Phase 3\10-0863-009-EA504.dwg LAYOUT NAME: EA504 ELECTRICAL DETAILS PLOTTED: Tuesday, September 27, 2016 - 4:08pm USER: rhurst

R/W 6-24 EDGE LIGHTING FIXTURE TABLE

ID NO.	CIR. NO.	DESCRIPTION	LOCATION		LENS COLOR	
			EASTING	NORTHING		
001	R1	FAA-E-982, 500W, Q20/PAR56/1	1478464.3780	222653.8823	GREEN	-
002	R2	FAA-E-982, 500W, Q20/PAR56/1	1478457.7872	222661.4031	GREEN	-
003	R1	FAA-E-982, 500W, Q20/PAR56/1	1478451.1964	222668.9238	GREEN	-
004	R2	FAA-E-982, 500W, Q20/PAR56/1	1478444.5720	222676.4830	GREEN	-
005	R1	L-862E ELEVATED THRESHOLD LIGHT	1478435.5746	222681.8947	RED	GREEN
006	R2	L-850C INPAVEMENT RUNWAY EDGE LIGHT	1478430.4111	222687.7868	GREEN	RED
007	R1	L-850C INPAVEMENT RUNWAY EDGE LIGHT	1478423.8203	222695.3075	GREEN	RED
008	R2	L-850C INPAVEMENT RUNWAY EDGE LIGHT	1478417.2295	222702.8283	GREEN	RED
009	R1	L-850C INPAVEMENT RUNWAY EDGE LIGHT	1478410.6388	222710.3490	GREEN	RED
010	A1	L-850D INPAVEMENT THRESHOLD	1478404.0480	222717.8698	GREEN	-
011	A1	L-850D INPAVEMENT THRESHOLD	1478397.4572	222725.3905	GREEN	-
012	A2	L-850D INPAVEMENT THRESHOLD	1478390.8664	222732.9113	GREEN	-
013	A3	L-850D INPAVEMENT THRESHOLD	1478384.2756	222740.4320	GREEN	-
014	A1	L-850D INPAVEMENT THRESHOLD	1478377.6849	222747.9528	GREEN	-
015	A2	L-850D INPAVEMENT THRESHOLD	1478371.1911	222755.5296	GREEN	-
016	A3	L-850D INPAVEMENT THRESHOLD	1478364.5033	222762.9943	GREEN	-
017	A1	L-850D INPAVEMENT THRESHOLD	1478357.9125	222770.5150	GREEN	-
018	A2	L-850D INPAVEMENT THRESHOLD	1478351.3218	222778.0358	GREEN	-
019	A3	L-850D INPAVEMENT THRESHOLD	1478344.7310	222785.5565	GREEN	-
020	A1	L-850D INPAVEMENT THRESHOLD	1478338.1402	222793.0773	GREEN	-
021	A2	L-850D INPAVEMENT THRESHOLD	1478331.5905	222800.5953	GREEN	-
022	R2	L-850C INPAVEMENT RUNWAY EDGE LIGHT	1478324.9562	222808.1504	GREEN	RED
023	R1	L-850C INPAVEMENT RUNWAY EDGE LIGHT	1478318.3350	222815.6108	GREEN	RED
024	R2	L-850C INPAVEMENT RUNWAY EDGE LIGHT	1478311.7552	222823.1411	GREEN	RED
025	R1	L-850C INPAVEMENT RUNWAY EDGE LIGHT	1478305.1754	222830.6715	GREEN	RED
026	R2	L-862E ELEVATED THRESHOLD LIGHT	1478301.2781	222835.1361	GREEN	RED
027	R1	FAA-E-982, 500W, Q20/PAR56/1	1478297.1367	222844.7971	GREEN	-
028	R2	FAA-E-982, 500W, Q20/PAR56/1	1478290.5569	222852.3274	GREEN	-
029	R1	FAA-E-982, 500W, Q20/PAR56/1	1478283.9771	222859.8577	GREEN	-
030	R2	FAA-E-982, 500W, Q20/PAR56/1	1478277.3973	222867.3881	GREEN	-
031	R1	L-850C INPAVEMENT RUNWAY EDGE LIGHT	1478447.8331	222963.6226	WHITE	YELLOW
032	R2	L-850C INPAVEMENT RUNWAY EDGE LIGHT	1478595.9031	223093.4104	WHITE	YELLOW
033	R1	L-862 ELEVATED RUNWAY EDGE LIGHT	1478743.9731	223223.1983	WHITE	YELLOW
034	R2	L-862 ELEVATED RUNWAY EDGE LIGHT	1478892.0431	223352.9861	WHITE	YELLOW
035	R1	L-862 ELEVATED RUNWAY EDGE LIGHT	1479040.1131	223482.7740	WHITE	YELLOW
036	R2	L-862 ELEVATED RUNWAY EDGE LIGHT	1479188.1830	223612.5619	WHITE	YELLOW
037	R1	L-862 ELEVATED RUNWAY EDGE LIGHT	1479336.2530	223742.3497	WHITE	YELLOW
038	R2	L-862 ELEVATED RUNWAY EDGE LIGHT	1479484.3230	223872.1376	WHITE	YELLOW
039	R1	L-862 ELEVATED RUNWAY EDGE LIGHT	1479632.3930	224001.9254	WHITE	YELLOW
040	R2	L-850C INPAVEMENT RUNWAY EDGE LIGHT	1479780.4630	224131.7133	WHITE	YELLOW
041	R1	L-850C INPAVEMENT RUNWAY EDGE LIGHT	1479928.5330	224261.5011	WHITE	WHITE
042	R2	L-850C INPAVEMENT RUNWAY EDGE LIGHT	1480076.6030	224391.2890	WHITE	WHITE
043	R1	L-862 ELEVATED RUNWAY EDGE LIGHT	1480224.6730	224521.0768	WHITE	WHITE
044	R2	L-862 ELEVATED RUNWAY EDGE LIGHT	1480372.7430	224650.8647	WHITE	WHITE
045	R1	L-862 ELEVATED RUNWAY EDGE LIGHT	1480520.8130	224780.6525	WHITE	WHITE
046	R2	L-862 ELEVATED RUNWAY EDGE LIGHT	1480668.8830	224910.4404	WHITE	WHITE
047	R1	L-862 ELEVATED RUNWAY EDGE LIGHT	1480816.9529	225040.2282	WHITE	WHITE
048	R2	L-862 ELEVATED RUNWAY EDGE LIGHT	1480965.0229	225170.0161	WHITE	WHITE
049	R1	L-862 ELEVATED RUNWAY EDGE LIGHT	1481113.0929	225299.8039	WHITE	WHITE
050	R2	L-862 ELEVATED RUNWAY EDGE LIGHT	1481261.1629	225429.5918	WHITE	WHITE
058	R2	L-862 ELEVATED RUNWAY EDGE LIGHT	1482445.7558	226467.8865	WHITE	WHITE
059	R1	L-862 ELEVATED RUNWAY EDGE LIGHT	1482593.8258	226597.6744	WHITE	WHITE
060	R2	L-862 ELEVATED RUNWAY EDGE LIGHT	1482741.8958	226727.4622	WHITE	WHITE
061	R1	L-862 ELEVATED RUNWAY EDGE LIGHT	1482889.9657	226857.2501	WHITE	WHITE
062	R2	L-862 ELEVATED RUNWAY EDGE LIGHT	1483038.0357	226987.0379	WHITE	WHITE
063	R1	L-862 ELEVATED RUNWAY EDGE LIGHT	1483186.1057	227116.8258	WHITE	WHITE
064	R2	L-862 ELEVATED RUNWAY EDGE LIGHT	1483334.1757	227246.6136	WHITE	WHITE
065	R1	L-862 ELEVATED RUNWAY EDGE LIGHT	1483482.2457	227376.4015	WHITE	WHITE
066	R2	L-850C INPAVEMENT RUNWAY EDGE LIGHT	1483630.3157	227506.1893	WHITE	WHITE
067	R1	L-850C INPAVEMENT RUNWAY EDGE LIGHT	1483778.3857	227635.9772	WHITE	WHITE
068	R2	L-862 ELEVATED RUNWAY EDGE LIGHT	1483926.4557	227765.7650	WHITE	WHITE
069	R1	L-862 ELEVATED RUNWAY EDGE LIGHT	1484074.5850	227895.5871	WHITE	WHITE
070	R2	L-862 ELEVATED RUNWAY EDGE LIGHT	1484222.5957	228025.3408	WHITE	WHITE
071	R1	L-862 ELEVATED RUNWAY EDGE LIGHT	1484370.6657	228155.1286	WHITE	WHITE
072	R2	L-862 ELEVATED RUNWAY EDGE LIGHT	1484518.7356	228284.9165	WHITE	WHITE
073	R1	L-862 ELEVATED RUNWAY EDGE LIGHT	1484666.8056	228414.7043	WHITE	WHITE
074	R2	L-862 ELEVATED RUNWAY EDGE LIGHT	1484814.8756	228544.4922	WHITE	WHITE
075	R1	L-862 ELEVATED RUNWAY EDGE LIGHT	1484962.9456	228674.2800	WHITE	WHITE
076	R2	L-862 ELEVATED RUNWAY EDGE LIGHT	1485111.0156	228804.0679	WHITE	WHITE
077	R1	L-862 ELEVATED RUNWAY EDGE LIGHT	1485259.0856	228933.8557	WHITE	WHITE
078	R2	L-862 ELEVATED RUNWAY EDGE LIGHT	1485407.1556	229063.6436	WHITE	WHITE
079	R1	L-862 ELEVATED RUNWAY EDGE LIGHT	1485555.2256	229193.4314	WHITE	WHITE
080	R2	L-862 ELEVATED RUNWAY EDGE LIGHT	1485703.2956	229323.2193	WHITE	YELLOW
081	R1	L-850C INPAVEMENT RUNWAY EDGE LIGHT	1485851.3656	229453.0071	WHITE	YELLOW
082	R2	L-850C INPAVEMENT RUNWAY EDGE LIGHT	1485999.4356	229582.7950	WHITE	YELLOW
083	R1	L-850C INPAVEMENT RUNWAY EDGE LIGHT	1486147.5055	229712.5829	WHITE	YELLOW
084	R2	L-850C INPAVEMENT RUNWAY EDGE LIGHT	1486295.5755	229842.3707	WHITE	YELLOW
085	R1	L-862 ELEVATED RUNWAY EDGE LIGHT	1486443.6455	229972.1586	WHITE	YELLOW
086	R2	L-862 ELEVATED RUNWAY EDGE LIGHT	1486591.7155	230101.9464	WHITE	YELLOW
087	R1	L-862 ELEVATED RUNWAY EDGE LIGHT	1486739.7855	230231.7343	WHITE	YELLOW
088	R2	L-862 ELEVATED RUNWAY EDGE LIGHT	1486887.8555	230361.5221	WHITE	YELLOW
089	R1	L-850C INPAVEMENT RUNWAY EDGE LIGHT	1487035.9255	230491.3100	WHITE	YELLOW
090	R2	FAA-E-982, 500W, Q20/PAR56/1	1487157.5269	230651.3416	GREEN	-
091	R1	FAA-E-982, 500W, Q20/PAR56/1	1487164.1182	230643.8214	GREEN	-
092	R2	FAA-E-982, 500W, Q20/PAR56/1	1487170.7096	230636.3011	GREEN	-
093	R1	FAA-E-982, 500W, Q20/PAR56/1	1487177.3002	230628.7802	GREEN	-
094	R2	L-862E ELEVATED THRESHOLD LIGHT	1487181.4562	230619.1321	RED	GREEN
095	R1	L-850C INPAVEMENT RUNWAY EDGE LIGHT	1487187.5981	230612.0862	RED	GREEN
096	R2	L-850C INPAVEMENT RUNWAY EDGE LIGHT	1487194.1401	230604.5345	RED	GREEN
097	R1	L-850C INPAVEMENT RUNWAY EDGE LIGHT	1487200.7315	230597.0142	RED	GREEN
098	R2	L-850C INPAVEMENT RUNWAY EDGE LIGHT	1487207.5896	230590.0049	RED	GREEN
099	R1	L-850C INPAVEMENT RUNWAY EDGE LIGHT	1487290.1460	230494.2504	RED	GREEN
100	R2	L-850C INPAVEMENT RUNWAY EDGE LIGHT	1487296.6880	230486.6987	RED	GREEN
101	R1	L-850C INPAVEMENT RUNWAY EDGE LIGHT	1487303.2794	230479.1785	RED	GREEN
102	R2	L-850C INPAVEMENT RUNWAY EDGE LIGHT	1487310.1375	230472.1691	RED	GREEN
103	R1	L-862E ELEVATED THRESHOLD LIGHT	1487316.2090	230465.3264	RED	GREEN
104	R2	FAA-E-982, 500W, Q20/PAR56/1	1487325.2387	230459.9368	GREEN	-
105	R1	FAA-E-982, 500W, Q20/PAR56/1	1487331.8301	230452.4165	GREEN	-
106	R2	FAA-E-982, 500W, Q20/PAR56/1	1487338.4215	230444.8963	GREEN	-
107	R1	FAA-E-982, 500W, Q20/PAR56/1	1487345.0121	230437.3754	GREEN	-
108	R1	L-862 ELEVATED RUNWAY EDGE LIGHT	1487170.5622	230337.6570	WHITE	YELLOW
109	R2	L-862 ELEVATED RUNWAY EDGE LIGHT	1487022.4862	230207.8761	WHITE	YELLOW
110	R1	L-862 ELEVATED RUNWAY EDGE LIGHT	1486874.4101	230078.0951	WHITE	YELLOW
111	R2	L-862 ELEVATED RUNWAY EDGE LIGHT	1486726.3341	229948.3142	WHITE	YELLOW
112	R1	L-862 ELEVATED RUNWAY EDGE LIGHT	1486578.2580	229818.5332	WHITE	YELLOW
113	R2	L-850C INPAVEMENT RUNWAY EDGE LIGHT	1486430.1820	229688.7523	WHITE	YELLOW
114	R1	L-850C INPAVEMENT RUNWAY EDGE LIGHT	1486282.1060	229558.9713	WHITE	YELLOW
115	R2	L-850C INPAVEMENT RUNWAY EDGE LIGHT	1486134.0299	229429.1904	WHITE	YELLOW
116	R1	L-850C INPAVEMENT RUNWAY EDGE LIGHT	1485985.9539	229299.4094	WHITE	YELLOW
117	R2	L-862 ELEVATED RUNWAY EDGE LIGHT	1485837.8778	229169.6284	WHITE	YELLOW
118	R1	L-862 ELEVATED RUNWAY EDGE LIGHT	1485689.8018	229039.8475	WHITE	WHITE
119	R2	L-850C INPAVEMENT RUNWAY EDGE LIGHT	1485541.7258	228910.0665	WHITE	WHITE
120	R1	L-862 ELEVATED RUNWAY EDGE LIGHT	1485393.6497	228780.2856	WHITE	WHITE
121	R2	L-862 ELEVATED RUNWAY EDGE LIGHT	1485245.5737	228650.5046	WHITE	WHITE
122	R1	L-862 ELEVATED RUNWAY EDGE LIGHT	1485097.4976	228520.7237	WHITE	WHITE
123	R2	L-862 ELEVATED RUNWAY EDGE LIGHT	1484949.4216	228390.9427	WHITE	WHITE
124	R1	L-862 ELEVATED RUNWAY EDGE LIGHT	1484801.3456	228261.1618	WHITE	WHITE
125	R2	L-862 ELEVATED RUNWAY EDGE LIGHT	1484653.2695	228131.3808	WHITE	WHITE
126	R1	L-862 ELEVATED RUNWAY EDGE LIGHT	1484505.1935	228001.5998	WHITE	WHITE
127	R2	L-862 ELEVATED RUNWAY EDGE LIGHT	1484357.1174	227871.8189	WHITE	WHITE
128	R1	L-862 ELEVATED RUNWAY EDGE LIGHT	1484209.0414	227742.0379	WHITE	WHITE
129	R2	L-862 ELEVATED RUNWAY EDGE LIGHT	1484060.9654	227612.2570	WHITE	WHITE
130	R1	L-862 ELEVATED RUNWAY EDGE LIGHT	1483912.8893	227482.4760	WHITE	WHITE
131	R2	L-862 ELEVATED RUNWAY EDGE LIGHT	1483764.8133	227352.6951	WHITE	WHITE
132	R1	L-862 ELEVATED RUNWAY EDGE LIGHT	1483616.7372	227222.9141	WHITE	WHITE
133	R2	L-862 ELEVATED RUNWAY EDGE LIGHT	1483468.6612	227093.1332	WHITE	WHITE
134	R1	L-862 ELEVATED RUNWAY EDGE LIGHT	1483320.5852	226963.3522	WHITE	WHITE
135	R2	L-862 ELEVATED RUNWAY EDGE LIGHT	1483172.5091	226833.5712	WHITE	WHITE
136	R1	L-862 ELEVATED RUNWAY EDGE LIGHT	1483024.4331	226703.7903	WHITE	WHITE
137	R2	L-862 ELEVATED RUNWAY EDGE LIGHT	1482876.3571	226574.0093	WHITE	WHITE
138	R1	L-862 ELEVATED RUNWAY EDGE LIGHT	1482728.2810	226444.2284	WHITE	WHITE
139	R2	L-862 ELEVATED RUNWAY EDGE LIGHT	1482580.2050	226314.4474	WHITE	WHITE
147	R2	L-862 ELEVATED RUNWAY EDGE LIGHT	1481395.6040	225276.1971	WHITE	WHITE
148	R1	L-862 ELEVATED RUNWAY EDGE LIGHT	1481247.5280	225146.4161	WHITE	WHITE
149	R2	L-862 ELEVATED RUNWAY EDGE LIGHT	1481099.4520	225016.6352	WHITE	WHITE
150	R1	L-862 ELEVATED RUNWAY EDGE LIGHT	1480951.3759	224886.8542	WHITE	WHITE
151	R2	L-862 ELEVATED RUNWAY EDGE LIGHT	1480803.2999	224757.0732	WHITE	WHITE
152	R1	L-862 ELEVATED RUNWAY EDGE LIGHT	1480655.2239	224627.2923	WHITE	WHITE
153	R2	L-862 ELEVATED RUNWAY EDGE LIGHT	1480507.1478	224497.5113	WHITE	WHITE
154	R1	L-862 ELEVATED RUNWAY EDGE LIGHT	1480359.0718	224367.7304	WHITE	WHITE
155	R2	L-850C INPAVEMENT RUNWAY EDGE LIGHT	1480210.9957	224237.9494	WHITE	WHITE
156	R1	L-850C INPAVEMENT RUNWAY EDGE LIGHT	1480062.9197	224108.1685	WHITE	WHITE
157	R2	L-850C INPAVEMENT RUNWAY EDGE LIGHT	1479914.8437	223978.3875	WHITE	YELLOW
158	R1	L-862 ELEVATED RUNWAY EDGE LIGHT	1479766.7676	223848.6066	WHITE	YELLOW
159	R2	L-862 ELEVATED RUNWAY EDGE LIGHT	1479618.6916	223718.8256	WHITE	YELLOW
160	R1	L-862 ELEVATED RUNWAY EDGE LIGHT	1479470.6155	223589.0447	WHITE	YELLOW
161	R2	L-862 ELEVATED RUNWAY EDGE LIGHT	1479322.5395	223459.2637	WHITE	YELLOW
162	R1	L-862 ELEVATED RUNWAY EDGE LIGHT	1479174.4635	223329.4827	WHITE	YELLOW
163	R2	L-862 ELEVATED RUNWAY EDGE LIGHT	1479026.3874	223199.7018	WHITE	YELLOW
164	R1	L-862 ELEVATED RUNWAY EDGE LIGHT	1478878.3114	223069.9208	WHITE	YELLOW
165	R2	L-850C INPAVEMENT RUNWAY EDGE LIGHT	1478730.2353	222940.1399	WHITE	YELLOW
166	R1	L-850C INPAVEMENT RUNWAY EDGE LIGHT	1478582.1593	222810.3589	WHITE	YELLOW

RUNWAY 6-24 EDGE LIGHTING SCHEDULE (1)

NTS EA601

TAXIWAY EDGE LIGHTING FIXTURE TABLE

ID NO.	CIR. NO.	DESCRIPTION	LOCATION		LENS COLOR
			EASTING	NORTHING	
001	TW A	L-861T ELEVATED TAXIWAY EDGE LIGHT, RE-INSTALLED	1478251.0353	223041.8973	BLUE
002	TW A	L-861T ELEVATED TAXIWAY EDGE LIGHT, RE-INSTALLED	1478276.8617	223023.2806	BLUE
003	TW A	L-861T ELEVATED TAXIWAY EDGE LIGHT, RE-INSTALLED	1478295.3697	222997.3762	BLUE
004	TW A	L-861T ELEVATED TAXIWAY EDGE LIGHT, RE-INSTALLED	1478304.6112	222966.9111	BLUE
005	TW A	L-861T ELEVATED TAXIWAY EDGE LIGHT, RE-INSTALLED	1478311.6391	222913.6294	BLUE
006	TW A	L-861T ELEVATED TAXIWAY EDGE LIGHT, RE-INSTALLED	1478319.0593	222857.3735	BLUE
007	TW A	L-861T ELEVATED TAXIWAY EDGE LIGHT, RE-INSTALLED	1478875.3732	222764.8239	BLUE
008	TW A	L-861T ELEVATED TAXIWAY EDGE LIGHT, RE-INSTALLED	1478848.7502	222776.8035	BLUE
009	TW A	L-861T ELEVATED TAXIWAY EDGE LIGHT, RE-INSTALLED	1478826.6145	222795.8376	BLUE
010	TW A	L-861T ELEVATED TAXIWAY EDGE LIGHT, RE-INSTALLED	1478810.7814	222820.3652	BLUE
011	TW A	L-861T ELEVATED TAXIWAY EDGE LIGHT, RE-INSTALLED	1478802.5496	222848.3746	BLUE
012	TW A	L-861T ELEVATED TAXIWAY EDGE LIGHT, RE-INSTALLED	1478792.9561	222914.1903	BLUE
013	TW A	L-861T ELEVATED TAXIWAY EDGE LIGHT, RE-INSTALLED	1478783.3626	222980.0060	BLUE
014	TW CE	L-861T ELEVATED TAXIWAY EDGE LIGHT, RE-INSTALLED	1483584.4428	227612.1531	BLUE
015	TW CE	L-861T ELEVATED TAXIWAY EDGE LIGHT, RE-INSTALLED	1483596.7736	227575.7941	BLUE
016	TW CE	L-861T ELEVATED TAXIWAY EDGE LIGHT, RE-INSTALLED	1483599.2738	227537.4825	BLUE
017	TW CE	L-861T ELEVATED TAXIWAY EDGE LIGHT, RE-INSTALLED	1483591.7730	227499.8292	BLUE
018	TW CE	L-861T ELEVATED TAXIWAY EDGE LIGHT, RE-INSTALLED	1483574.7825	227465.4003	BLUE
019	TW CE	L-861T ELEVATED TAXIWAY EDGE LIGHT, RE-INSTALLED	1483545.4965	227441.0465	BLUE
020	TW CE	L-861T ELEVATED TAXIWAY EDGE LIGHT, RE-INSTALLED	1483708.1560	227720.8756	BLUE
021	TW CE	L-861T ELEVATED TAXIWAY EDGE LIGHT, RE-INSTALLED	1483742.3870	227703.9827	BLUE
022	TW CE	L-861T ELEVATED TAXIWAY EDGE LIGHT, RE-INSTALLED	1483779.8239	227696.5251	BLUE
023	TW CE	L-861T ELEVATED TAXIWAY EDGE LIGHT, RE-INSTALLED	1483817.9153	227699.0110	BLUE
024	TW CE	L-861T ELEVATED TAXIWAY EDGE LIGHT, RE-INSTALLED	1483854.0654	227711.2709	BLUE
025	TW CE	L-861T ELEVATED TAXIWAY EDGE LIGHT, RE-INSTALLED	1483883.1661	227735.4705	BLUE
026	TW CE	L-861T ELEVATED TAXIWAY EDGE LIGHT, RE-INSTALLED	1486964.9447	230625.7021	BLUE
027	TW CE	L-861T ELEVATED TAXIWAY EDGE LIGHT, RE-INSTALLED	1486986.3021	230593.7190	BLUE
028	TW CE	L-861T ELEVATED TAXIWAY EDGE LIGHT, RE-INSTALLED	1486998.6539	230557.2979	BLUE
029	TW CE	L-861T ELEVATED TAXIWAY EDGE LIGHT	1487002.4766	230517.4167	BLUE
030	TW CE	L-861T ELEVATED TAXIWAY EDGE LIGHT	1486994.9630	230479.6992	BLUE
031	TW CE	L-861T ELEVATED TAXIWAY EDGE LIGHT	1486976.6253	230446.7157	BLUE
032	TW CE	L-861T ELEVATED TAXIWAY EDGE LIGHT	1486948.6280	230420.8205	BLUE

TAXIWAY EDGE LIGHTING SCHEDULE (2)

NTS EA601

SYM	DESCRIPTION	DATE	APPR

NAVFAC

Professional Certification
I HEREBY CERTIFY THAT THESE DOCUMENTS WERE PREPARED OR APPROVED BY ME, AND THAT I AM A DULY LICENSED PROFESSIONAL ENGINEER UNDER THE LAWS OF THE STATE OF MARYLAND, LICENSE NO. 24789, EXPIRATION DATE: 07/06/17.
SEAL

JOHNSON, MIRMIRAN & THOMPSON
Gannett Fleming
A Joint Venture
272 Bendix Road, Suite 260
Virginia Beach, Virginia, 23452
Telephone: (757) 499-1895
Web: www.jmt.com

A/E INFO

APPROVED

FOR COMMANDER NAVFAC

ACTIVITY

JAMES FLETCHER PER CHECKLIST
SATISFACTORY TO DATE 9/27/2016
DES VALUE DRW VALUE CHK VALUE
PM/DM RH
BRANCH MANAGER
CHIEF ENG/ARCH E. GALLAHER, PE

DEPARTMENT OF THE NAVY
NAVAL FACILITIES ENGINEERING COMMAND
WASHINGTON, D.C.
NAVFAC WASHINGTON
NAVAL AIR STATION PATUXENT RIVER
PATUXENT RIVER, MARYLAND
FY16 SPECIAL PROJECT RM12-2137
REPAIR RUNWAYS 14-32 & 6-24 - PHASE 3
AIRFIELD LIGHTING TABLES

IPT BLUE

SCALE: AS NOTED
EPROJECT NO.: 1382138
CONSTR. CONTR. NO. N40080-17-R-0002
NAVFAC DRAWING NO. 13091637
SHEET 204 OF 206

EA601

DRAWFORM REVISION: 10 MARCH 2009

FILE NAME: G:\PHPA\100863_009_FY16_Repair_Runways_\CADD\Phase 3\Electrical_Phase 3\10-0863-009-EA601.dwg LAYOUT NAME: EA601 AIRFIELD LIGHTING TABLES PLOTTED: Tuesday, September 27, 2016 - 4:08pm USER: rhurst

R/W 6-24 CENTERLINE LIGHTING FIXTURE TABLE I

ID NO.	CIR. NO.	DESCRIPTION	LOCATION EASTING	LOCATION NORTHING	LENS COLOR
001	C1	L-852N RUNWAY CENTERLINE	1478381.7146	222774.1465	WHITE/RED
002	C2	L-852N RUNWAY CENTERLINE	1478400.5198	222790.6197	WHITE/RED
003	C1	L-852N RUNWAY CENTERLINE	1478419.3250	222807.0928	WHITE/RED
004	C2	L-852N RUNWAY CENTERLINE	1478438.1302	222823.5659	WHITE/RED
005	C1	L-852N RUNWAY CENTERLINE	1478456.9355	222840.0390	WHITE/RED
006	C2	L-852N RUNWAY CENTERLINE	1478475.7407	222856.5121	WHITE/RED
007	C1	L-852N RUNWAY CENTERLINE	1478494.5459	222872.9852	WHITE/RED
008	C2	L-852N RUNWAY CENTERLINE	1478513.3511	222889.4583	WHITE/RED
009	C1	L-852N RUNWAY CENTERLINE	1478532.1563	222905.9314	WHITE/RED
010	C2	L-852N RUNWAY CENTERLINE	1478550.9616	222922.4045	WHITE/RED
011	C1	L-852N RUNWAY CENTERLINE	1478569.7668	222938.8777	WHITE/RED
012	C2	L-852N RUNWAY CENTERLINE	1478588.5720	222955.3508	WHITE/RED
013	C1	L-852N RUNWAY CENTERLINE	1478607.3772	222971.8239	WHITE/RED
014	C2	L-852N RUNWAY CENTERLINE	1478626.1824	222988.2970	WHITE/RED
015	C1	L-852N RUNWAY CENTERLINE	1478644.9877	223004.7701	WHITE/RED
016	C2	L-852N RUNWAY CENTERLINE	1478663.7929	223021.2432	WHITE/RED
017	C1	L-852N RUNWAY CENTERLINE	1478682.5981	223037.7163	WHITE/RED
018	C2	L-852N RUNWAY CENTERLINE	1478701.4033	223054.1894	WHITE/RED
019	C1	L-852N RUNWAY CENTERLINE	1478720.2085	223070.6625	WHITE/RED
020	C2	L-852N RUNWAY CENTERLINE	1478739.0138	223087.1357	WHITE/RED
021	C1	L-852N RUNWAY CENTERLINE	1478757.8190	223103.6088	WHITE/RED
022	C2	L-852N RUNWAY CENTERLINE	1478776.6242	223120.0819	WHITE/RED
023	C1	L-852N RUNWAY CENTERLINE	1478795.4294	223136.5550	WHITE/RED
024	C2	L-852N RUNWAY CENTERLINE	1478814.2347	223153.0281	WHITE/RED
025	C1	L-852N RUNWAY CENTERLINE	1478833.0399	223169.5012	WHITE/RED
026	C2	L-852N RUNWAY CENTERLINE	1478851.8451	223185.9743	WHITE/RED
027	C1	L-852N RUNWAY CENTERLINE	1478870.6503	223202.4474	WHITE/RED
028	C2	L-852N RUNWAY CENTERLINE	1478889.4555	223218.9205	WHITE/RED
029	C1	L-852N RUNWAY CENTERLINE	1478908.2608	223235.3937	WHITE/RED
030	C2	L-852N RUNWAY CENTERLINE	1478927.0660	223251.8668	WHITE/RED
031	C1	L-852N RUNWAY CENTERLINE	1478945.8712	223268.3399	WHITE/RED
032	C2	L-852N RUNWAY CENTERLINE	1478964.6764	223284.8130	WHITE/RED
033	C1	L-852N RUNWAY CENTERLINE	1478983.4816	223301.2861	WHITE/RED
034	C2	L-852N RUNWAY CENTERLINE	1479002.2869	223317.7592	WHITE/RED
035	C1	L-852N RUNWAY CENTERLINE	1479021.0921	223334.2323	WHITE/RED
036	C2	L-852N RUNWAY CENTERLINE	1479039.8973	223350.7054	WHITE/RED
037	C1	L-852N RUNWAY CENTERLINE	1479058.7025	223367.1785	WHITE/RED
038	C2	L-852N RUNWAY CENTERLINE	1479077.5077	223383.6517	WHITE/RED
039	C1	L-852N RUNWAY CENTERLINE	1479096.3130	223400.1248	WHITE/RED
040	C2	L-852N RUNWAY CENTERLINE	1479115.1182	223416.5979	WHITE/RED
041	C1	L-852N RUNWAY CENTERLINE	1479133.9234	223433.0710	WHITE/WHITE
042	C1	L-852N RUNWAY CENTERLINE	1479152.7286	223449.5441	WHITE/RED
043	C2	L-852N RUNWAY CENTERLINE	1479171.5338	223466.0172	WHITE/WHITE
044	C2	L-852N RUNWAY CENTERLINE	1479190.3391	223482.4903	WHITE/RED
045	C1	L-852N RUNWAY CENTERLINE	1479209.1443	223499.2041	WHITE/WHITE
046	C1	L-852N RUNWAY CENTERLINE	1479227.9495	223515.4365	WHITE/RED
047	C2	L-852N RUNWAY CENTERLINE	1479246.7547	223531.9097	WHITE/WHITE
048	C2	L-852N RUNWAY CENTERLINE	1479265.5599	223548.3828	WHITE/RED
049	C1	L-852N RUNWAY CENTERLINE	1479284.3652	223564.8559	WHITE/WHITE
050	C1	L-852N RUNWAY CENTERLINE	1479303.1704	223581.3290	WHITE/RED
051	C2	L-852N RUNWAY CENTERLINE	1479321.9756	223597.8021	WHITE/WHITE
052	C2	L-852N RUNWAY CENTERLINE	1479340.7808	223614.2752	WHITE/RED
053	C1	L-852N RUNWAY CENTERLINE	1479359.5861	223630.7483	WHITE/WHITE
054	C1	L-852N RUNWAY CENTERLINE	1479378.3913	223647.2214	WHITE/RED
055	C2	L-852N RUNWAY CENTERLINE	1479397.1965	223663.6945	WHITE/WHITE
056	C2	L-852N RUNWAY CENTERLINE	1479416.0017	223680.1677	WHITE/RED
057	C1	L-852N RUNWAY CENTERLINE	1479434.8069	223696.6408	WHITE/WHITE
058	C1	L-852N RUNWAY CENTERLINE	1479453.6122	223713.1139	WHITE/RED
059	C2	L-852N RUNWAY CENTERLINE	1479472.4174	223729.5870	WHITE/WHITE
060	C2	L-852N RUNWAY CENTERLINE	1479491.2226	223746.0601	WHITE/RED
061	C1	L-852N RUNWAY CENTERLINE	1479510.0278	223762.5332	WHITE/WHITE
062	C1	L-852N RUNWAY CENTERLINE	1479528.8330	223779.0063	WHITE/RED
063	C2	L-852N RUNWAY CENTERLINE	1479547.6383	223795.4794	WHITE/WHITE
064	C2	L-852N RUNWAY CENTERLINE	1479566.4435	223811.9525	WHITE/RED
065	C1	L-852N RUNWAY CENTERLINE	1479585.2487	223828.4257	WHITE/WHITE
066	C1	L-852N RUNWAY CENTERLINE	1479604.0539	223844.8988	WHITE/RED
067	C2	L-852N RUNWAY CENTERLINE	1479622.8591	223861.3719	WHITE/WHITE
068	C2	L-852N RUNWAY CENTERLINE	1479641.6644	223877.8450	WHITE/RED
069	C1	L-852N RUNWAY CENTERLINE	1479660.4696	223894.3181	WHITE/WHITE
070	C1	L-852N RUNWAY CENTERLINE	1479679.2748	223910.7912	WHITE/RED
071	C2	L-852N RUNWAY CENTERLINE	1479698.0800	223927.2643	WHITE/WHITE
072	C2	L-852N RUNWAY CENTERLINE	1479716.8852	223943.7374	WHITE/RED
073	C1	L-852N RUNWAY CENTERLINE	1479735.6905	223960.2105	WHITE/WHITE
074	C1	L-852N RUNWAY CENTERLINE	1479754.4957	223976.6837	WHITE/RED
075	C2	L-852N RUNWAY CENTERLINE	1479773.3009	223993.1568	WHITE/WHITE
076	C2	L-852N RUNWAY CENTERLINE	1479792.1061	224009.6299	WHITE/RED
077	C1	L-852N RUNWAY CENTERLINE	1479810.9113	224026.1030	WHITE/WHITE
078	C1	L-852N RUNWAY CENTERLINE	1479829.7166	224042.5761	WHITE/RED
079	C2	L-852N RUNWAY CENTERLINE	1479848.5218	224059.0492	WHITE/WHITE
080	C2	L-852N RUNWAY CENTERLINE	1479867.3270	224075.5223	WHITE/RED
081	C1	L-852N RUNWAY CENTERLINE	1479886.1322	224091.9954	WHITE/WHITE
082	C1	L-852N RUNWAY CENTERLINE	1479904.9374	224108.4685	WHITE/RED
083	C2	L-852N RUNWAY CENTERLINE	1479923.7427	224124.9417	WHITE/WHITE
084	C2	L-852N RUNWAY CENTERLINE	1479942.5479	224141.4148	WHITE/RED
085	C1	L-852N RUNWAY CENTERLINE	1479961.3531	224157.8879	WHITE/WHITE
086	C1	L-852N RUNWAY CENTERLINE	1479980.1583	224174.3610	WHITE/RED
087	C2	L-852N RUNWAY CENTERLINE	1480055.3792	224240.2534	WHITE/RED
088	C2	L-852N RUNWAY CENTERLINE	1480074.1844	224256.7265	WHITE/WHITE
089	C1	L-852N RUNWAY CENTERLINE	1480092.9897	224273.1997	WHITE/RED
090	C1	L-852N RUNWAY CENTERLINE	1480111.7949	224289.6728	WHITE/WHITE
091	C2	L-852N RUNWAY CENTERLINE	1480130.6001	224306.1459	WHITE/RED
092	C2	L-852N RUNWAY CENTERLINE	1480149.4053	224322.6190	WHITE/WHITE
093	C1	L-852N RUNWAY CENTERLINE	1480168.2105	224339.0921	WHITE/RED
094	C1	L-852N RUNWAY CENTERLINE	1480187.0158	224355.5652	WHITE/WHITE
095	C2	L-852N RUNWAY CENTERLINE	1480205.8210	224372.0383	WHITE/RED
096	C2	L-852N RUNWAY CENTERLINE	1480224.6262	224388.5114	WHITE/WHITE
097	C1	L-852N RUNWAY CENTERLINE	1480243.4314	224404.9845	WHITE/RED
098	C1	L-852N RUNWAY CENTERLINE	1480262.2366	224421.4577	WHITE/WHITE
099	C2	L-852N RUNWAY CENTERLINE	1480281.0419	224437.9308	WHITE/RED
100	C2	L-852N RUNWAY CENTERLINE	1480299.8471	224454.4039	WHITE/WHITE
101	C1	L-852N RUNWAY CENTERLINE	1480318.6523	224470.8770	WHITE/RED
102	C1	L-852N RUNWAY CENTERLINE	1480337.4575	224487.3501	WHITE/WHITE
103	C2	L-852N RUNWAY CENTERLINE	1480356.2627	224503.8232	WHITE/RED
104	C2	L-852N RUNWAY CENTERLINE	1480375.0680	224520.2963	WHITE/WHITE
105	C1	L-852N RUNWAY CENTERLINE	1480393.8732	224536.7694	WHITE/RED
106	C1	L-852N RUNWAY CENTERLINE	1480412.6784	224553.2425	WHITE/WHITE
107	C2	L-852N RUNWAY CENTERLINE	1480431.4836	224569.7157	WHITE/RED
108	C2	L-852N RUNWAY CENTERLINE	1480450.2888	224586.1888	WHITE/WHITE
109	C1	L-852N RUNWAY CENTERLINE	1480469.0941	224602.6619	WHITE/RED
110	C1	L-852N RUNWAY CENTERLINE	1480487.8993	224619.1350	WHITE/WHITE
111	C2	L-852N RUNWAY CENTERLINE	1480506.7045	224635.6081	WHITE/RED
112	C2	L-852N RUNWAY CENTERLINE	1480525.5097	224652.0812	WHITE/WHITE
113	C1	L-852N RUNWAY CENTERLINE	1480544.3150	224668.5543	WHITE/RED
114	C1	L-852N RUNWAY CENTERLINE	1480563.1202	224685.0274	WHITE/WHITE
115	C2	L-852N RUNWAY CENTERLINE	1480581.9254	224701.5005	WHITE/RED
116	C2	L-852N RUNWAY CENTERLINE	1480600.7306	224717.9737	WHITE/WHITE
117	C1	L-852N RUNWAY CENTERLINE	1480619.5358	224734.4468	WHITE/RED
118	C2	L-852N RUNWAY CENTERLINE	1480638.3411	224750.9199	WHITE/WHITE
119	C1	L-852N RUNWAY CENTERLINE	1480657.1463	224767.3930	WHITE/WHITE
120	C2	L-852N RUNWAY CENTERLINE	1480675.9515	224783.8661	WHITE/WHITE
121	C1	L-852N RUNWAY CENTERLINE	1480694.7567	224800.3392	WHITE/WHITE
122	C2	L-852N RUNWAY CENTERLINE	1480713.5619	224816.8123	WHITE/WHITE
123	C1	L-852N RUNWAY CENTERLINE	1480732.3672	224833.2854	WHITE/WHITE
124	C2	L-852N RUNWAY CENTERLINE	1480751.1724	224849.7585	WHITE/WHITE
125	C1	L-852N RUNWAY CENTERLINE	1480769.9776	224866.2317	WHITE/WHITE
126	C2	L-852N RUNWAY CENTERLINE	1480788.7828	224882.7048	WHITE/WHITE
127	C1	L-852N RUNWAY CENTERLINE	1480807.5880	224899.1779	WHITE/WHITE
128	C2	L-852N RUNWAY CENTERLINE	1480826.3933	224915.6510	WHITE/WHITE
129	C1	L-852N RUNWAY CENTERLINE	1480845.1985	224932.1241	WHITE/WHITE
130	C2	L-852N RUNWAY CENTERLINE	1480864.0037	224948.5972	WHITE/WHITE
131	C1	L-852N RUNWAY CENTERLINE	1480882.8089	224965.0703	WHITE/WHITE
132	C2	L-852N RUNWAY CENTERLINE	1480901.6141	224981.5434	WHITE/WHITE
133	C1	L-852N RUNWAY CENTERLINE	1480920.4194	224998.0165	WHITE/WHITE
134	C2	L-852N RUNWAY CENTERLINE	1480939.2246	225014.4897	WHITE/WHITE
135	C1	L-852N RUNWAY CENTERLINE	1480958.0298	225030.9628	WHITE/WHITE
136	C2	L-852N RUNWAY CENTERLINE	1480976.8350	225047.4359	WHITE/WHITE
137	C1	L-852N RUNWAY CENTERLINE	1480995.6402	225063.9090	WHITE/WHITE
138	C2	L-852N RUNWAY CENTERLINE	1481014.4455	225080.3821	WHITE/WHITE
139	C1	L-852N RUNWAY CENTERLINE	1481033.2507	225096.8552	WHITE/WHITE
140	C2	L-852N RUNWAY CENTERLINE	1481052.0559	225113.3283	WHITE/WHITE
141	C1	L-852N RUNWAY CENTERLINE	1481070.8611	225129.8014	WHITE/WHITE
142	C2	L-852N RUNWAY CENTERLINE	1481089.6663	225146.2745	WHITE/WHITE
143	C1	L-852N RUNWAY CENTERLINE	1481108.4716	225162.7476	WHITE/WHITE
144	C2	L-852N RUNWAY CENTERLINE	1481127.2768	225179.2208	WHITE/WHITE
145	C1	L-852N RUNWAY CENTERLINE	1481146.0820	225195.6939	WHITE/WHITE
146	C2	L-852N RUNWAY CENTERLINE	1481164.8872	225212.1670	WHITE/WHITE
147	C1	L-852N RUNWAY CENTERLINE	1481183.6925	225228.6401	WHITE/WHITE
148	C2	L-852N RUNWAY CENTERLINE	1481202.4977	225245.1132	WHITE/WHITE
149	C1	L-852N RUNWAY CENTERLINE	1481221.3029	225261.5863	WHITE/WHITE
150	C2	L-852N RUNWAY CENTERLINE	1481240.1081	225278.0594	WHITE/WHITE
151	C1	L-852N RUNWAY CENTERLINE	1481258.9133	225294.5325	WHITE/WHITE
152	C2	L-852N RUNWAY CENTERLINE	1481277.7186	225311.0056	WHITE/WHITE
153	C1	L-852N RUNWAY CENTERLINE	1481296.5238	225327.4788	WHITE/WHITE
154	C2	L-852N RUNWAY CENTERLINE	1481315.3290	225343.9519	WHITE/WHITE
155	C1	L-852N RUNWAY CENTERLINE	1481334.1342	225360.4250	WHITE/WHITE
156	C2	L-852N RUNWAY CENTERLINE	1481352.9394	225376.8981	WHITE/WHITE
157	C1	L-852N RUNWAY CENTERLINE	1481371.7447	225393.3712	WHITE/WHITE
158	C2	L-852N RUNWAY CENTERLINE	1481390.5499	225409.8443	WHITE/WHITE
159	C1	L-852N RUNWAY CENTERLINE	1481409.3551	225426.3174	WHITE/WHITE
160	C2	L-852N RUNWAY CENTERLINE	1481428.1603	225442.7905	WHITE/WHITE
211	C1	L-852N RUNWAY CENTERLINE	1482387.2449	226282.9474	WHITE/WHITE
212	C2	L-852N RUNWAY CENTERLINE	1482406.0442	226299.4273	WHITE/WHITE
213	C1	L-852N RUNWAY CENTERLINE	1482424.8434	226315.9073	WHITE/WHITE
214	C2	L-852N RUNWAY CENTERLINE	1482443.6426	226332.3872	WHITE/WHITE
215	C1	L-852N RUNWAY CENTERLINE	1482462.4419	226348.8672	WHITE/WHITE
216	C2	L-852N RUNWAY CENTERLINE	1482481.2411	226365.3471	WHITE/WHITE
217	C1	L-852N RUNWAY CENTERLINE	1482500.0403	226381.8271	WHITE/WHITE
218	C2	L-852N RUNWAY CENTERLINE	1482518.8396	226398.3070	WHITE/WHITE
219	C1	L-852N RUNWAY CENTERLINE	1482537.6388	226414.7870	WHITE/WHITE
220	C2	L-852N RUNWAY CENTERLINE	1482556.4380	226431.2669	WHITE/WHITE
221	C1	L-852N RUNWAY CENTERLINE	1482575.2372	226447.7469	WHITE/WHITE
222	C2	L-852N RUNWAY CENTERLINE	1482594.0365	226464.2268	WHITE/WHITE
223	C1	L-852N RUNWAY CENTERLINE	1482612.8357	226480.7068	WHITE/WHITE
224	C2	L-852N RUNWAY CENTERLINE	1482631.6349	226497.1867	WHITE/WHITE
225	C1	L-852N RUNWAY CENTERLINE	1482650.4342	226513.6666	WHITE/WHITE
226	C2	L-852N RUNWAY CENTERLINE	1482669.2334	226530.1466	WHITE/WHITE
227	C1	L-852N RUNWAY CENTERLINE	1482688.0326	226546.6265	WHITE/WHITE
228	C2	L-852N RUNWAY CENTERLINE	1482706.8318	226563.1065	WHITE/WHITE
229	C1	L-852N RUNWAY CENTERLINE	1482725.6311	226579.5864	WHITE/WHITE
230	C2	L-852N RUNWAY CENTERLINE	1482744.4303	226596.0664	WHITE/WHITE
231	C1	L-852N RUNWAY CENTERLINE	1482763.2295	226612.5463	WHITE/WHITE
232	C2	L-852N RUNWAY CENTERLINE	1482782.0288	226629.0263	WHITE/WHITE
233	C1	L-852N RUNWAY CENTERLINE	1482800.8280	226645.5062	WHITE/WHITE
234	C2	L-852N RUNWAY CENTERLINE	1482819.6272	226661.9862	WHITE/WHITE
235	C1	L-852N RUNWAY CENTERLINE	1482838.4265	226678.4661	WHITE/WHITE
236	C2	L-852N RUNWAY CENTERLINE	1482857.2257	226694.9461	WHITE/WHITE
237	C1	L-852N RUNWAY CENTERLINE	1482876.0249	226711.4260	WHITE/WHITE
238	C2	L-852N RUNWAY CENTERLINE	1482894.8241	226727.9060	WHITE/WHITE
239	C1	L-852N RUNWAY CENTERLINE	1482913.6234	226744.3859	WHITE/WHITE
240	C2	L-852N RUNWAY CENTERLINE	1482932.4226	226760.8659	WHITE/WHITE
241	C1	L-852N RUNWAY CENTERLINE	1482951.2218	226777.3458	WHITE/WHITE
242	C2	L-852N RUNWAY CENTERLINE	1482970.0211	226793.8258	WHITE/WHITE
243	C1	L-852N RUNWAY CENTERLINE	1482988.8203	226810.3057	WHITE/WHITE
244	C2	L-852N RUNWAY CENTERLINE	1483007.6195	226826.7857	WHITE/WHITE
245	C1	L-852N RUNWAY CENTERLINE	1483026.4188	226843.2656	WHITE/WHITE
246	C2	L-852N RUNWAY CENTERLINE	1483045.2180	226859.7455	WHITE/WHITE
247	C1	L-852N RUNWAY CENTERLINE	1483064.0172	226876.2255	WHITE/WHITE
248	C2	L-852N RUNWAY CENTERLINE	1483082.8164	226892.7054	WHITE/WHITE
249	C1	L-852N RUNWAY CENTERLINE	1483101.6157	226909.1854	WHITE/WHITE
250	C2	L-852N RUNWAY CENTERLINE	1483120.4149	226925.6653	WHITE/WHITE
251	C1	L-852N RUNWAY CENTERLINE	1483139.2141	226942.1453	WHITE/WHITE
252	C2	L-852N RUNWAY CENTERLINE	1483158.0134	226958.6252	WHITE/WHITE
253	C1	L-852N RUNWAY CENTERLINE	1483176.8126	226975.1052	WHITE/WHITE
254	C2	L-852N RUNWAY CENTERLINE	1483195.6118	226991.5851	WHITE/WHITE
255	C1	L-852N RUNWAY CENTERLINE	1483214.4111	227008.0651	WHITE/WHITE
256	C2	L-852N RUNWAY CENTERLINE	1483233.2103	227024.5450	WHITE/WHITE
257	C1	L-852N RUNWAY CENTERLINE	1483252.0095	227041.0250	WHITE/WHITE
258	C2	L-852N RUNWAY CENTERLINE	1483270.8087	227057.5049	WHITE/WHITE
259	C1	L-852N RUNWAY CENTERLINE	1483289.6080	227073.9849	WHITE/WHITE
260	C2	L-852N RUNWAY CENTERLINE	1483308.4072	227090.4648	WHITE/WHITE
261	C1	L-852N RUNWAY CENTERLINE	1483327.2064	227106.9448	WHITE/WHITE
262	C2	L-852N RUNWAY CENTERLINE	1483346.0057	227123.4247	WHITE/WHITE
263	C1	L-852N RUNWAY CENTERLINE	1483364.8049	227139.9047	WHITE/WHITE
264	C2	L-852N RUNWAY CENTERLINE	1483383.6041	227156.3846	WHITE/WHITE
265	C1	L-852N RUNWAY CENTERLINE	1483402.4034	227172.8646	WHITE/WHITE
266	C2	L-852N RUNWAY CENTERLINE	1483421.2026	227189.3445	WHITE/WHITE
267	C1	L-852N RUNWAY CENTERLINE	1483440.0018	227205.8244	WHITE/WHITE
268	C2	L-852N RUNWAY CENTERLINE	1483458.8010	227222.3044	WHITE/WHITE
269	C1	L-852N RUNWAY CENTERLINE	1483477.6003	227238.7843	WHITE/WHITE
270	C2	L-852N RUNWAY CENTERLINE	1483496.3995	227255.2643	WHITE/WHITE
271	C1	L-852N RUNWAY CENTERLINE	1483515.1987	227271.7442	WHITE/WHITE
272	C2	L-852N RUNWAY CENTERLINE	1483533.9980	227288.2242	WHITE/WHITE
273	C1	L-852N RUNWAY CENTERLINE	1483552.7972	227304.7041	WHITE/WHITE
274	C2	L-852N RUNWAY CENTERLINE	1483571.5964	227321.1841	WHITE/WHITE
275	C1	L-852N RUNWAY CENTERLINE	1483590.3956	227337.6640	WHITE/WHITE
276	C2	L-852N RUNWAY CENTERLINE	1483609.1949	227354.1440	WHITE/WHITE
277	C1	L-852N RUNWAY CENTERLINE	1483627.9941	227370.6239	WHITE/WHITE
278	C2	L-852N RUNWAY CENTERLINE	1483646.7933	227387.1039	WHITE/WHITE
279	C1	L-852N RUNWAY CENTERLINE	1483665.5926	227403.5838	WHITE/WHITE
280	C2	L-852N RUNWAY CENTERLINE	1483684.3918	227420.0638	WHITE/WHITE
281	C1	L-852N RUNWAY CENTERLINE	1483703.1910	227436.5437	WHITE/WHITE
282	C2	L-852N RUNWAY CENTERLINE	1483721.9903	227453.0237	WHITE/WHITE
283	C1	L-852N RUNWAY CENTERLINE	1483740.7895	227469.5036	WHITE/WHITE
284	C2	L-852N RUNWAY CENTERLINE	1483759.5887	227485.9836	WHITE/WHITE
285	C1	L-852N RUNWAY CENTERLINE	1483778.3879	227502.4635	WHITE/WHITE
286	C2	L-852N RUNWAY CENTERLINE	1483797.1872	227518.9434	WHITE/WHITE
287	C1	L-852N RUNWAY CENTERLINE	1483815.9864	227535.4234	WHITE/WHITE
288	C2	L-852N RUNWAY CENTERLINE	1483834.7856	227551.9033	WHITE/WHITE
289	C1	L-852N RUNWAY CENTERLINE	1483853.5849	227568.3833	WHITE/WHITE
290	C2	L-852N RUNWAY CENTERLINE	1483872.3841	227584.8632	WHITE/WHITE
291	C1	L-852N RUNWAY CENTERLINE	1483891.1833	227601.3432	WHITE/WHITE
292	C2	L-852N RUNWAY CENTERLINE	1483909.9826	227617.8231	WHITE/WHITE
293	C1	L-852N RUNWAY CENTERLINE	1483928.7818	227634.3031	WHITE/WHITE
294	C2	L-852N RUNWAY CENTERLINE	1483947.5810	227650.7830	WHITE/WHITE
295	C1	L-852N RUNWAY CENTERLINE	1483966.0610	227667.5822	WHITE/WHITE
296	C2	L-852N RUNWAY CENTERLINE	1483985.1795	227683.7429	WHITE/WHITE
297	C1	L-852N RUNWAY CENTERLINE	1484003.9787	227700.2229	WHITE/WHITE
298	C2	L-852N RUNWAY CENTERLINE	1484022.7779	227716.7028	WHITE/WHITE
299	C1	L-852N RUNWAY CENTERLINE	1484041.5772	227733.1828	WHITE/WHITE
300	C2	L-852N RUNWAY CENTERLINE	1484060.3764	227749.6627	WHITE/WHITE
301	C1	L-852N RUNWAY CENTERLINE	1484079.1756	227766.1427	WHITE/WHITE
302	C2	L-852N RUNWAY CENTERLINE	1484097.9749	227782.6226	WHITE/WHITE
303	C1	L-852N RUNWAY CENTERLINE	1484116.7741	227799.1026	WHITE/WHITE
304	C2	L-852N RUNWAY CENTERLINE	1484135.5733	227815.5825	WHITE/WHITE
305	C1	L-852N RUNWAY CENTERLINE	1484154.3725	227832.0625	WHITE/WHITE
306	C2	L-852N RUNWAY CENTERLINE	1484173.1718	227848.5424	WHITE/WHITE
307	C1	L-852N RUNWAY CENTERLINE	1484191.9710	227865.0223	WHITE/WHITE
308	C2	L-852N RUNWAY CENTERLINE	1484210.7702	227881.5023	WHITE/WHITE
309	C1	L-852N RUNWAY CENTERLINE	1484229.5695	227897.9822	WHITE/WHITE
310	C2	L-852N RUNWAY CENTERLINE	1484248.3687	227914.4622	WHITE/WHITE
311	C1	L-852N RUNWAY CENTERLINE	1484267.1679	227930.9421	WHITE/WHITE

RUNWAY 6-24 CENTERLINE LIGHTING SCHEDULE I (1)
NTS EA602

Professional Certification
I HEREBY CERTIFY THAT THESE DOCUMENTS WERE PREPARED OR APPROVED BY ME, AND THAT I AM A DULY LICENSED PROFESSIONAL ENGINEER UNDER THE LAWS OF THE STATE OF MARYLAND, LICENSE NO. 24789, EXPIRATION DATE: 07/05/17.
SEAL

JOHNSON, MIRMIRAN & THOMPSON
Gannett Fleming
A Joint Venture
272 Bendix Road, Suite 260
Virginia Beach, Virginia, 23452
Telephone: (757) 499-1895
Web: www.jmt.com
A/E INFO

APPROVED
FOR COMMANDER NAVFAC
ACTIVITY
JAMES FLETCHER PER CHECKLIST
SATISFACTORY TO DATE 9/27/2016
DES VALUE DRW VALUE CHK VALUE
PM/DM RH
BRANCH MANAGER
CHIEF ENG/ARCH E. GALLAHER, PE

DEPARTMENT OF THE NAVY — NAVAL FACILITIES ENGINEERING COMMAND
IPT BLUE — NAVFAC WASHINGTON — WASHINGTON, D.C.
NAVAL AIR STATION PATUXENT RIVER — PATUXENT RIVER, MARYLAND
FY16 SPECIAL PROJECT RM12-2137
REPAIR RUNWAYS 14-32 & 6-24 - PHASE 3
AIRFIELD LIGHTING TABLES

SCALE: AS NOTED
EPROJECT NO.: 1382138
CONSTR. CONTR. NO. N40080-17-R-0002
NAVFAC DRAWING NO. 13091638
SHEET 205 OF 206
EA602

DRAWFORM REVISION: 10 MARCH 2009

1	2	3	4	5

R/W 6-24 CENTERLINE LIGHTING FIXTURE TABLE II

ID NO.	CIR. NO.	DESCRIPTION	LOCATION EASTING	LOCATION NORTHING	LENS COLOR
312	C2	L-852N RUNWAY CENTERLINE	1484286.09	227948.64	WHITE/WHITE
313	C1	L-852N RUNWAY CENTERLINE	1484304.89	227965.12	WHITE/WHITE
314	C2	L-852N RUNWAY CENTERLINE	1484323.69	227981.59	WHITE/WHITE
315	C1	L-852N RUNWAY CENTERLINE	1484342.49	227998.07	WHITE/WHITE
316	C2	L-852N RUNWAY CENTERLINE	1484361.3	228014.55	WHITE/WHITE
317	C1	L-852N RUNWAY CENTERLINE	1484380.1	228031.03	WHITE/WHITE
318	C2	L-852N RUNWAY CENTERLINE	1484398.9	228047.51	WHITE/WHITE
319	C1	L-852N RUNWAY CENTERLINE	1484417.7	228063.99	WHITE/WHITE
320	C2	L-852N RUNWAY CENTERLINE	1484436.5	228080.47	WHITE/WHITE
321	C1	L-852N RUNWAY CENTERLINE	1484455.3	228096.94	WHITE/WHITE
322	C2	L-852N RUNWAY CENTERLINE	1484474.1	228113.42	WHITE/WHITE
323	C1	L-852N RUNWAY CENTERLINE	1484492.9	228129.9	WHITE/WHITE
324	C2	L-852N RUNWAY CENTERLINE	1484511.7	228146.38	WHITE/WHITE
325	C1	L-852N RUNWAY CENTERLINE	1484530.5	228162.86	WHITE/WHITE
326	C2	L-852N RUNWAY CENTERLINE	1484549.3	228179.34	WHITE/WHITE
327	C1	L-852N RUNWAY CENTERLINE	1484568.1	228195.81	WHITE/WHITE
328	C2	L-852N RUNWAY CENTERLINE	1484586.9	228212.29	WHITE/WHITE
329	C1	L-852N RUNWAY CENTERLINE	1484605.7	228228.77	WHITE/WHITE
330	C2	L-852N RUNWAY CENTERLINE	1484624.5	228245.25	WHITE/WHITE
331	C1	L-852N RUNWAY CENTERLINE	1484643.3	228261.73	WHITE/WHITE
332	C2	L-852N RUNWAY CENTERLINE	1484662.11	228278.21	WHITE/WHITE
333	C1	L-852N RUNWAY CENTERLINE	1484680.91	228294.68	WHITE/WHITE
334	C2	L-852N RUNWAY CENTERLINE	1484699.71	228311.16	WHITE/WHITE
335	C1	L-852N RUNWAY CENTERLINE	1484718.51	228327.64	WHITE/WHITE
336	C2	L-852N RUNWAY CENTERLINE	1484737.31	228344.12	WHITE/WHITE
337	C1	L-852N RUNWAY CENTERLINE	1484756.11	228360.6	WHITE/WHITE
338	C2	L-852N RUNWAY CENTERLINE	1484774.91	228377.08	WHITE/WHITE
339	C1	L-852N RUNWAY CENTERLINE	1484793.71	228393.55	WHITE/WHITE
340	C2	L-852N RUNWAY CENTERLINE	1484812.51	228410.03	WHITE/WHITE
341	C1	L-852N RUNWAY CENTERLINE	1484831.31	228426.51	WHITE/WHITE
342	C2	L-852N RUNWAY CENTERLINE	1484850.11	228442.99	WHITE/WHITE
343	C1	L-852N RUNWAY CENTERLINE	1484868.91	228459.47	WHITE/WHITE
344	C2	L-852N RUNWAY CENTERLINE	1484887.71	228475.95	WHITE/WHITE
345	C1	L-852N RUNWAY CENTERLINE	1484906.51	228492.42	WHITE/WHITE
346	C2	L-852N RUNWAY CENTERLINE	1484925.31	228508.9	WHITE/WHITE
347	C1	L-852N RUNWAY CENTERLINE	1484944.12	228525.38	WHITE/WHITE
348	C2	L-852N RUNWAY CENTERLINE	1484962.92	228541.86	WHITE/WHITE
349	C1	L-852N RUNWAY CENTERLINE	1484981.72	228558.34	WHITE/WHITE
351	C2	L-852N RUNWAY CENTERLINE	1485019.32	228591.29	WHITE/WHITE
352	C1	L-852N RUNWAY CENTERLINE	1485038.12	228607.77	WHITE/WHITE
353	C1	L-852N RUNWAY CENTERLINE	1485056.92	228624.25	WHITE/WHITE
354	C1	L-852N RUNWAY CENTERLINE	1485000.52	228574.82	RED/WHITE
354	C1	L-852N RUNWAY CENTERLINE	1485075.72	228640.73	RED/WHITE
355	C2	L-852N RUNWAY CENTERLINE	1485094.52	228657.21	WHITE/WHITE
356	C2	L-852N RUNWAY CENTERLINE	1485113.32	228673.69	RED/WHITE
357	C1	L-852N RUNWAY CENTERLINE	1485132.12	228690.16	WHITE/WHITE
358	C1	L-852N RUNWAY CENTERLINE	1485150.92	228706.64	RED/WHITE
359	C2	L-852N RUNWAY CENTERLINE	1485169.72	228723.12	WHITE/WHITE
360	C2	L-852N RUNWAY CENTERLINE	1485188.52	228739.6	RED/WHITE
361	C1	L-852N RUNWAY CENTERLINE	1485207.32	228756.08	WHITE/WHITE
362	C1	L-852N RUNWAY CENTERLINE	1485226.12	228772.56	RED/WHITE
363	C2	L-852N RUNWAY CENTERLINE	1485244.93	228789.03	WHITE/WHITE
364	C2	L-852N RUNWAY CENTERLINE	1485263.73	228805.51	RED/WHITE
365	C1	L-852N RUNWAY CENTERLINE	1485282.53	228821.99	WHITE/WHITE
366	C1	L-852N RUNWAY CENTERLINE	1485301.33	228838.47	RED/WHITE
367	C2	L-852N RUNWAY CENTERLINE	1485320.13	228854.95	WHITE/WHITE
368	C2	L-852N RUNWAY CENTERLINE	1485338.93	228871.43	RED/WHITE
369	C1	L-852N RUNWAY CENTERLINE	1485357.73	228887.9	WHITE/WHITE
370	C1	L-852N RUNWAY CENTERLINE	1485376.53	228904.38	RED/WHITE
371	C2	L-852N RUNWAY CENTERLINE	1485395.33	228920.86	WHITE/WHITE
372	C2	L-852N RUNWAY CENTERLINE	1485414.13	228937.34	RED/WHITE
373	C1	L-852N RUNWAY CENTERLINE	1485432.93	228953.82	WHITE/WHITE
374	C1	L-852N RUNWAY CENTERLINE	1485451.73	228970.3	RED/WHITE
375	C2	L-852N RUNWAY CENTERLINE	1485470.53	228986.77	WHITE/WHITE
376	C2	L-852N RUNWAY CENTERLINE	1485489.33	229003.25	RED/WHITE
377	C1	L-852N RUNWAY CENTERLINE	1485508.13	229019.73	WHITE/WHITE
378	C1	L-852N RUNWAY CENTERLINE	1485526.94	229036.21	RED/WHITE
379	C2	L-852N RUNWAY CENTERLINE	1485545.74	229052.69	WHITE/WHITE
380	C2	L-852N RUNWAY CENTERLINE	1485564.54	229069.17	RED/WHITE
381	C1	L-852N RUNWAY CENTERLINE	1485583.34	229085.64	WHITE/WHITE
382	C1	L-852N RUNWAY CENTERLINE	1485602.14	229102.12	RED/WHITE
383	C2	L-852N RUNWAY CENTERLINE	1485620.94	229118.6	WHITE/WHITE
384	C2	L-852N RUNWAY CENTERLINE	1485639.74	229135.08	RED/WHITE
385	C1	L-852N RUNWAY CENTERLINE	1485658.54	229151.56	WHITE/WHITE
386	C1	L-852N RUNWAY CENTERLINE	1485677.34	229168.04	RED/WHITE
387	C2	L-852N RUNWAY CENTERLINE	1485696.14	229184.51	WHITE/WHITE
388	C2	L-852N RUNWAY CENTERLINE	1485714.94	229200.99	RED/WHITE
389	C1	L-852N RUNWAY CENTERLINE	1485733.74	229217.47	WHITE/WHITE
390	C1	L-852N RUNWAY CENTERLINE	1485752.54	229233.95	RED/WHITE
391	C2	L-852N RUNWAY CENTERLINE	1485771.34	229250.43	WHITE/WHITE
392	C2	L-852N RUNWAY CENTERLINE	1485790.14	229266.91	RED/WHITE
393	C1	L-852N RUNWAY CENTERLINE	1485808.95	229283.38	WHITE/WHITE
394	C1	L-852N RUNWAY CENTERLINE	1485827.75	229299.86	RED/WHITE
395	C2	L-852N RUNWAY CENTERLINE	1485846.55	229316.34	WHITE/WHITE
396	C2	L-852N RUNWAY CENTERLINE	1485865.35	229332.82	RED/WHITE
397	C1	L-852N RUNWAY CENTERLINE	1485884.15	229349.3	WHITE/WHITE
398	C1	L-852N RUNWAY CENTERLINE	1485902.95	229365.78	RED/WHITE
399	C2	L-852N RUNWAY CENTERLINE	1485921.75	229382.25	WHITE/WHITE
400	C2	L-852N RUNWAY CENTERLINE	1485940.55	229398.73	RED/WHITE
401	C1	L-852N RUNWAY CENTERLINE	1485959.35	229415.21	WHITE/WHITE
402	C1	L-852N RUNWAY CENTERLINE	1485978.15	229431.69	RED/WHITE
403	C2	L-852N RUNWAY CENTERLINE	1485996.95	229448.17	WHITE/WHITE
404	C2	L-852N RUNWAY CENTERLINE	1486015.75	229464.65	RED/WHITE
405	C1	L-852N RUNWAY CENTERLINE	1486034.55	229481.12	WHITE/WHITE
406	C1	L-852N RUNWAY CENTERLINE	1486053.35	229497.6	RED/WHITE
407	C2	L-852N RUNWAY CENTERLINE	1486072.15	229514.08	WHITE/WHITE
408	C2	L-852N RUNWAY CENTERLINE	1486147.36	229579.99	RED/WHITE
409	C1	L-852N RUNWAY CENTERLINE	1486166.16	229596.47	WHITE/WHITE
410	C1	L-852N RUNWAY CENTERLINE	1486184.96	229612.95	RED/WHITE
411	C2	L-852N RUNWAY CENTERLINE	1486203.76	229629.43	WHITE/WHITE
412	C2	L-852N RUNWAY CENTERLINE	1486222.56	229645.91	RED/WHITE
413	C1	L-852N RUNWAY CENTERLINE	1486241.36	229662.39	WHITE/WHITE
414	C1	L-852N RUNWAY CENTERLINE	1486260.16	229678.86	RED/WHITE
415	C2	L-852N RUNWAY CENTERLINE	1486278.96	229695.34	WHITE/WHITE
416	C2	L-852N RUNWAY CENTERLINE	1486297.76	229711.82	RED/WHITE
417	C1	L-852N RUNWAY CENTERLINE	1486316.56	229728.3	WHITE/WHITE
418	C1	L-852N RUNWAY CENTERLINE	1486335.36	229744.78	RED/WHITE
419	C2	L-852N RUNWAY CENTERLINE	1486354.16	229761.26	WHITE/WHITE
420	C2	L-852N RUNWAY CENTERLINE	1486372.96	229777.73	RED/WHITE
421	C1	L-852N RUNWAY CENTERLINE	1486391.77	229794.21	WHITE/WHITE
422	C1	L-852N RUNWAY CENTERLINE	1486410.57	229810.69	RED/WHITE
423	C2	L-852N RUNWAY CENTERLINE	1486429.37	229827.17	WHITE/WHITE
424	C2	L-852N RUNWAY CENTERLINE	1486448.17	229843.65	RED/WHITE
425	C1	L-852N RUNWAY CENTERLINE	1486466.97	229860.13	WHITE/WHITE
426	C1	L-852N RUNWAY CENTERLINE	1486485.77	229876.6	RED/WHITE
427	C1	L-852N RUNWAY CENTERLINE	1486504.57	229893.08	RED/WHITE
428	C2	L-852N RUNWAY CENTERLINE	1486523.37	229909.56	RED/WHITE
429	C1	L-852N RUNWAY CENTERLINE	1486542.17	229926.04	RED/WHITE
430	C2	L-852N RUNWAY CENTERLINE	1486560.97	229942.52	RED/WHITE
431	C1	L-852N RUNWAY CENTERLINE	1486579.77	229959	RED/WHITE
432	C2	L-852N RUNWAY CENTERLINE	1486598.57	229975.47	RED/WHITE
433	C1	L-852N RUNWAY CENTERLINE	1486617.37	229991.95	RED/WHITE
434	C2	L-852N RUNWAY CENTERLINE	1486636.17	230008.43	RED/WHITE
435	C1	L-852N RUNWAY CENTERLINE	1486654.97	230024.91	RED/WHITE
436	C2	L-852N RUNWAY CENTERLINE	1486673.77	230041.39	RED/WHITE
437	C1	L-852N RUNWAY CENTERLINE	1486692.58	230057.87	RED/WHITE
438	C2	L-852N RUNWAY CENTERLINE	1486711.38	230074.34	RED/WHITE
439	C1	L-852N RUNWAY CENTERLINE	1486730.18	230090.82	RED/WHITE
440	C2	L-852N RUNWAY CENTERLINE	1486748.98	230107.3	RED/WHITE
441	C1	L-852N RUNWAY CENTERLINE	1486767.78	230123.78	RED/WHITE
442	C2	L-852N RUNWAY CENTERLINE	1486786.58	230140.26	RED/WHITE
443	C1	L-852N RUNWAY CENTERLINE	1486805.38	230156.74	RED/WHITE
444	C2	L-852N RUNWAY CENTERLINE	1486824.18	230173.21	RED/WHITE
445	C1	L-852N RUNWAY CENTERLINE	1486842.98	230189.69	RED/WHITE
446	C2	L-852N RUNWAY CENTERLINE	1486861.78	230206.17	RED/WHITE
447	C1	L-852N RUNWAY CENTERLINE	1486880.58	230222.65	RED/WHITE
448	C2	L-852N RUNWAY CENTERLINE	1486899.38	230239.13	RED/WHITE
449	C1	L-852N RUNWAY CENTERLINE	1486918.18	230255.61	RED/WHITE
450	C2	L-852N RUNWAY CENTERLINE	1486936.98	230272.08	RED/WHITE
451	C1	L-852N RUNWAY CENTERLINE	1486955.78	230288.56	RED/WHITE
452	C2	L-852N RUNWAY CENTERLINE	1486974.59	230305.04	RED/WHITE
453	C2	L-852N RUNWAY CENTERLINE	1486993.39	230321.52	RED/WHITE
454	C2	L-852N RUNWAY CENTERLINE	1487012.19	230338	RED/WHITE
455	C1	L-852N RUNWAY CENTERLINE	1487030.99	230354.48	RED/WHITE
456	C2	L-852N RUNWAY CENTERLINE	1487049.79	230370.95	RED/WHITE
457	C1	L-852N RUNWAY CENTERLINE	1487068.59	230387.43	RED/WHITE
458	C2	L-852N RUNWAY CENTERLINE	1487087.39	230403.91	RED/WHITE
459	C1	L-852N RUNWAY CENTERLINE	1487106.19	230420.39	RED/WHITE
460	C2	L-852N RUNWAY CENTERLINE	1487124.99	230436.87	RED/WHITE
461	C1	L-852N RUNWAY CENTERLINE	1487143.79	230453.35	RED/WHITE
462	C2	L-852N RUNWAY CENTERLINE	1487162.59	230469.82	RED/WHITE
463	C1	L-852N RUNWAY CENTERLINE	1487181.39	230486.3	RED/WHITE
464	C2	L-852N RUNWAY CENTERLINE	1487200.19	230502.78	RED/WHITE
465	C1	L-852N RUNWAY CENTERLINE	1487218.99	230519.26	RED/WHITE
466	C2	L-852N RUNWAY CENTERLINE	1487236.65	230535.08	RED/WHITE

RUNWAY 6-24 CENTERLINE LIGHTING SCHEDULE II (1)
NTS EA603

TABLE 15-4. AGL Series Circuit Load Calculation Data Sheet Vault E-1710, PHASE 2

CKT No.	Regulator (CCR) (Runway or Taxiway, etc.)	CKT Type (Amps)	Cable Size (AWG)	CCR Rating (kVA) (1)	CCR Input (V)	Steady burning light load (kVA) (2)	Sign load (kVA) (3)	Other loads (kVA) (4)	Total Connected Load (kVA)	Transformer Losses (kVA) (5)	Cable Length (M or FT)	Cable Losses (kVA) (6)	Calculated CCR load (kVA)
	RUNWAY 6-24 EDGE CIR. 1	20	6	50	480	31.128	7.150		38.278	7.656	35,000	0.630	46.564
	RUNWAY 6-24 EDGE CIR. 2	20	6	50	480	31.128	7.150		38.278	7.656	35,000	0.630	46.564
	RUNWAY 6-24 C/L CIR. 1	20	6	30	480	18.212	-		18.212	3.642	34,000	0.612	22.466
	RUNWAY 6-24 C/L CIR. 2	20	6	30	480	18.212	-		18.212	3.642	34,000	0.612	22.466
									-	-		-	-
									-	-		-	-
									-	-		-	-
									-	-		-	-
									-	-		-	-
									-	-		-	-
									-	-		-	-
									-	-		-	-

Notes:

(1) CCR rating may be in KW. To determine KVA, divide KW by power factor (PF) and CFR efficiency (EF) based on full load. Obtain PF and EF from manufacturer.

(2) To determine KVA for steady burning lights by summing "[no. of fixtures] x [lamp wattage] / 1000" for all lights on circuit. Steady burning lights can be runway edge lights, threshold/end lights, centerline lights, touchdown zone lights, taxiway edge and centerline lights, and approach lights.

(3) Determine KVA for signs based on manufacturer rating or specified limit VA for each size and length (modules or width) of sign on circuit.

(4) Other loads may be pulsing lights such as REIL. Determine KVA based on manufacturer data for each type.

(5) Isolation transformer losses may be estimated at 20%(30/45/65W), 15%(100W) & 10%(200-500W) of connected load. REF. FAA AC150/5345-47.

(6) Determine cable losses based on cable length and manufacturer cable data on conductor resistance. Loss per unit length is typically based on the relationship I2R = W and assumed PF of unity for the cable. Typical values for cable losses are: 34VA / 300M (34VA / 1,000ft) for 6.6A circuits with uncoated stranded #8AWG conductor, and 196VA / 300M (196VA / 1,000ft) for 20A circuits with uncoated stranded #6 conductor.

LIGHTING VAULT E-1710 CCR LOAD TABLE (2)
NTS EA603

TABLE 15-4. AGL Series Circuit Load Calculation Data Sheet Vault E-155, Phase 2

CKT No.	Regulator (CCR) (Runway or Taxiway, etc.)	CKT Type (Amps)	Cable Size (AWG)	CCR Rating (kVA) (1)	CCR Input (V)	Steady burning light load (kVA) (2)	Sign load (kVA) (3)	Other loads (kVA) (4)	Total Connected Load (kVA)	Transformer Losses (kVA) (5)	Cable Length (M or FT)	Cable Losses (kVA) (6)	Calculated CCR load (kVA)
A1	R/W 6 APPROACH CIRCUIT 1	6.6	6	30	480	18.900			18.900	3.780	7,000	0.126	22.806
A2	R/W 6 APPROACH CIRCUIT 2	6.6	6	30	480	18.900			18.900	3.780	7,000	0.126	22.806
A3	R/W 6 APPROACH CIRCUIT 3	6.6	6	30	480	18.900			18.900	3.780	7,000	0.126	22.806
									-	-		-	-
									-	-		-	-
									-	-		-	-
									-	-		-	-
									-	-		-	-
									-	-		-	-
									-	-		-	-
									-	-		-	-
									-	-		-	-

Notes:

(1) CCR rating may be in KW. To determine KVA, divide KW by power factor (PF) and CFR efficiency (EF) based on full load. Obtain PF and EF from manufacturer.

(2) To determine KVA for steady burning lights by summing "[no. of fixtures] x [lamp wattage] / 1000" for all lights on circuit. Steady burning lights can be runway edge lights, threshold/end lights, centerline lights, touchdown zone lights, taxiway edge and centerline lights, and approach lights.

(3) Determine KVA for signs based on manufacturer rating or specified limit VA for each size and length (modules or width) of sign on circuit.

(4) Other loads may be pulsing lights such as REIL. Determine KVA based on manufacturer data for each type.

(5) Isolation transformer losses may be estimated at 20%(30/45/65W), 15%(100W) & 10%(200-500W) of connected load. REF. FAA AC150/5345-47.

(6) Determine cable losses based on cable length and manufacturer cable data on conductor resistance. Loss per unit length is typically based on the relationship I2R = W and assumed PF of unity for the cable. Typical values for cable losses are: 34VA / 300M (34VA / 1,000ft) for 6.6A circuits with uncoated stranded #8AWG conductor, and 196VA / 300M (196VA / 1,000ft) for 20A circuits with uncoated stranded #6 conductor.

LIGHTING VAULT E-155 CCR LOAD TABLE (3)
NTS EA603

SYM | DESCRIPTION | DATE | APPR

NAVFAC

STATE OF MARYLAND — DAVID JONATHAN PARSLEY — NO. 24789 — PROFESSIONAL ENGINEER

Professional Certification
I HEREBY CERTIFY THAT THESE DOCUMENTS WERE PREPARED OR APPROVED BY ME, AND THAT I AM A DULY LICENSED PROFESSIONAL ENGINEER UNDER THE LAWS OF THE STATE OF MARYLAND, LICENSE NO. 24789, EXPIRATION DATE: 07/05/17. SEAL

JOHNSON, MIRMIRAN & THOMPSON
Gannett Fleming
A Joint Venture
272 Bendix Road, Suite 260
Virginia Beach, Virginia, 23452
Telephone: (757) 499–1895
Web: www.jmt.com
A/E INFO

APPROVED
FOR COMMANDER NAVFAC
ACTIVITY
JAMES FLETCHER PER CHECKLIST
SATISFACTORY TO DATE 9/27/2016
DES VALUE DRW VALUE CHK VALUE
PM/DM RH
BRANCH MANAGER
CHIEF ENG/ARCH E. GALLAHER, PE

DEPARTMENT OF THE NAVY
NAVAL FACILITIES ENGINEERING COMMAND
WASHINGTON, D.C.
NAVFAC WASHINGTON
IPT BLUE
NAVAL AIR STATION PATUXENT RIVER
PATUXENT RIVER, MARYLAND
FY16 SPECIAL PROJECT RM12-2137
REPAIR RUNWAYS 14-32 & 6-24 - PHASE 3
AIRFIELD LIGHTING TABLES

SCALE: AS NOTED
EPROJECT NO.: 1382138
CONSTR. CONTR. NO. N40080-17-R-0002
NAVFAC DRAWING NO. 13091639
SHEET 206 OF 206
EA603
DRAWFORM REVISION: 10 MARCH 2009

1	2	3	4	5