FOUNDATION NOTES:

1. SUBGRADE AND STRUCTURAL FILL RECOMMENDATIONS ARE BASED ON BORINGS TAKEN AT VAULT 1710. THE CONTRACTOR SHALL TAKE TWO (2) ADDITIONAL BORINGS AT OPPOSITE CORNERS OF THE PROPOSED BUILDING SITE FOR VAULT 155 TO A MINIMUM DEPTH OF 15 FEET. A GEOTECHNICAL ENGINEER, LICENSED AS A PROFESSIONAL ENGINEER IN THE STATE OF MARYLAND, SHALL REVIEW THE BORINGS TO DETERMINE IF RECOMMENDATIONS FOR SITE PREPARATIONS IN THE FOUNDATIONS NOTES REQUIRE MODIFICATIONS.
2. THE DESIGN OF BOTH VAULTS 1710 AND 155 ARE BASED ON THE FOLLOWING ASSUMPTIONS, MINIMUM BEARING CAPACITY OF 2000 PSF AND A MINIMUM DEPTH OF FOOTING OF 30 INCHES BELOW GRADE. IF BORINGS TAKEN AT VAULT 155 RESULT IN A LOWER BEARING CAPACITY, THE ENGINEER OF RECORD SHALL BE NOTIFIED IMMEDIATELY TO DETERMINE IF FOUNDATION MODIFICATIONS ARE REQUIRED.
3. THE SUBGRADE SHALL BE PREPARED AS FOLLOWS:
   A. DENSIFY SUBGRADE SOILS PER RECOMMENDATIONS ON CIVIL DRAWINGS.
   B. PROOFROLL SUBGRADE SOILS TO CHECK FOR POCKETS OF LOOSE MATERIAL.
   C. A GEOTECHNICAL ENGINEER, LICENSED AS A PROFESSIONAL ENGINEER IN THE STATE OF MARYLAND SHALL OVERSEE THE SUBGRADE PREPARATIONS AND MAKE RECOMMENDATIONS FOR THE NUMBER OF PASSES FOR PROOF ROLLING, DIRECTIONS FOR UNDERCUTTING AND STABILIZING POCKETS OF LOOSE MATERIAL, AND BACKFILLING THE SITE.
4. STRUCTURAL FILL AND PLACEMENT SHALL BE COMPLETED AS FOLLOWS:
   A. ANY MATERIAL USED FOR STRUCTURAL FILL SHALL BE EVALUATED AND APPROVED BY A GEOTECHNICAL ENGINEER, LICENSED AS A PROFESSIONAL ENGINEER IN THE STATE OF MARYLAND.
   B. SUITABLE STRUCTURAL FILL MATERIAL SHALL CONSIST OF SAND OR GRAVEL CONTAINING LESS THAN 25% BY WEIGHT OF FINES (SP, SW, GP, GW), WITH LL LESS THAN 20 AND PL LESS THAN 6, AND FREE OF RUBBLE, ORGANICS, CLAY, DEBRIS, AND OTHER UNSUITABLE MATERIAL.
   C. COMPACT TO A DRY DENSITY OF A MINIMUM 95% STANDARD PROCTOR MAXIMUM DRY DENSITY PER ASTM D698.
   D. PLACE FILL FOR COMPACTION IN MAXIMUM 10 INCH LOOSE LIFTS, MECHANICALLY COMPACTED AT EACH LIFT TO THE SPECIFIED MINIMUM DRY DENSITY.
   E. THE GEOTECHNICAL ENGINEER SHALL PERFORM FIELD DENSITY TESTS ON EACH LIFT AS NECESSARY TO ASSURE ADEQUATE COMPACTION.
5. FOUNDATION EXCAVATIONS SHALL BE PREPARED AS FOLLOWS:
   A. FOOTING EXCAVATIONS SHALL EXTEND INTO NATURAL SOIL OR WELL COMPACTED STRUCTURAL FILL.
   B. ALL FOUNDATION EXCAVATIONS SHALL BE OBSERVED BY A GEOTECHNICAL ENGINEER, LICENSED AS A PROFESSIONAL ENGINEER IN THE STATE OF MARYLAND.
   C. IF EXCESSIVELY LOOSE, SOFT, OR UNSUITABLE MATERIAL IS ENCOUNTERED, THE GEOTECHNICAL ENGINEER SHALL HAND AUGER BORINGS AT THE BASE OF FOUNDATION EXCAVATIONS TO DETERMINE EXTENT OF UNSUITABLE MATERIAL.
   D. POCKETS OF UNSUITABLE MATERIAL BENEATH FOUNDATIONS SHALL BE UNDERCUT PER RECOMMENDATIONS OF THE GEOTECHNICAL ENGINEER. THE PROPOSED FOOTING ELEVATION SHALL BE RE-ESTABLISHED BY MEANS OF BACKFILLING WITH FLOWABLE FILL, OPEN GRADED STONE/GRAVEL OR SUITABLE STRUCTURAL FILL MATERIAL COMPACTED TO A MINIMUM DRY DENSITY OF 98% STANDARD PROCTOR MAXIMUM DRY DENSITY PER ASTM D698, PRIOR TO CONCRETE PLACEMENT.
   E. IMMEDIATELY PRIOR TO REINFORCEMENT PLACEMENT, BEARING SURFACES OF ALL FOUNDATIONS SHALL BE COMPACTED USING HAND OPERATED MECHANICAL TEMPERS.
   F. COMPACTION TESTING IN THE BASE OF FOUNDATIONS MAY BE WAIVED BY THE INSPECTOR, WHERE FIRM BEARING SOILS ARE OBSERVED DURING FOUNDATION INSPECTIONS.
   G. SOILS AT FOUNDATIONS EXCAVATIONS SHALL BE PROTECTED AGAINST ANY DETRIMENTAL CHANGES, SUCH AS RAIN, FROST, OR PHYSICAL DISTURBANCE.
   H. WHEN POSSIBLE, ALL FOOTING CONCRETE SHALL BE PLACED THE SAME DAY THE EXCAVATION IS COMPLETED. OTHERWISE, FOOTING EXCAVATIONS SHALL BE ADEQUATELY PROTECTED.

FOUNDATION NOTES CONT.:

6. CONCRETE SHALL NOT BE PLACED ON FROZEN GROUND OR STANDING WATER.
7. PROVIDE SHEETING AS REQUIRED TO SUPPORT LATERAL LOADS DURING EXCAVATION.
8. CONTRACTOR SHALL SAFEGUARD AND PROTECT ALL EXCAVATIONS AND ALL EXCAVATIONS SHALL BE KEPT FREE OF WATER.
9. FOUNDATIONS SHALL BE PLACED ON A MINIMUM OF 30 INCHES BELOW GRADE FOR FROST PROTECTION.
10. SLAB ON GRADE SHALL BE SUPPORTED BY A MINIMUM OF 4 INCH LAYER OF CLEAN, COMPACTED, POORLY GRADED SAND (SP) OR GRAVEL (GP) WITH LESS THAN 5% PASSING THE NO. 200 SIEVE. A VAPOR BARRIER OR RETARDER SHALL BE USED BELOW ALL SLABS ON GRADE.

CONCRETE NOTES:

1. CONCRETE CONSTRUCTION SHALL BE IN ACCORDANCE WITH ACI 318-14.
2. CONCRETE SHALL HAVE A MINIMUM 28 DAY COMPRESSIVE STRENGTH OF 4000 PSI FOR SLABS AND FOUNDATIONS. LIGHTWEIGHT CONCRETE SHALL HAVE A COMPRESSIVE STRENGTH OF 3000 PSF AND WEIGH A MAXIMUM OF 110 PCF.
3. REINFORCING STEEL SHALL BE DEFORMED BARS IN ACCORDANCE WITH ASTM A-615 GRADE 60.
4. ALL REINFORCEMENT SHALL BE CONTINUOUS UNLESS OTHERWISE NOTED.
5. CONTINUOUS REINFORCING STEEL SHALL BE LAPPED IN ACCORDANCE WITH TABLE SHOWN .
6. MAXIMUM SLAB ON GRADE JOINT SPACING SHALL BE 15 FEET.
7. CONCRETE COVER FOR REINFORCEMENT SHALL CONFORM TO THE FOLLOWING UNLESS OTHERWISE INDICATED ON THE DRAWING:
   A. UNFORMED SURFACES IN CONTACT WITH GROUND _ 3 INCHES
   B. ALL OTHER MEMBERS _ _ _ _ _ _ _ _ _ _ _ _ 2 INCHES
8. EXTERIOR EQUIPMENT SLABS SHALL BE SIZED TO ACCOMMODATE THE EQUIPMENT FOOTPRINT WITH APPROXIMATELY 1 FT. CLEARANCE ON EACH SIDE. FOR SLAB DETAILS, SEE TYPICAL EQUIPMENT SLAB SECTION SHT. S-503.

MASONRY NOTES:

1. CONCRETE MASONRY UNITS (CMU) SHALL HAVE A MINIMUM 28 DAY COMPRESSIVE STRENGTH OF 1500 PSI AND SHALL CONFORM TO ASTM C90.
2. ALL MORTAR SHALL CONFORM TO ASTM C-270, TYPE M OR S.
3. GROUT USED TO FILL CMU CELLS SHALL CONFORM TO ASTM C-476 AND OBTAIN A MINIMUM 28 DAY COMPRESSIVE STRENGTH OF 3000 PSI.
4. GROUT SOLID CMU CELLS CONTAINING REINFORCEMENT OR ANCHORS. ALL VERTICAL REINFORCING SHALL BE CENTERED AND CONTINUOUS FOR THE FULL HEIGHT OF THE WALL.
5. ALL CMU SHALL BE LAID IN RUNNING BOND PATTERN.
6. PROVIDE GALVANIZED TRUSS TYPE HORIZONTAL JOINT REINFORCING AT EVERY OTHER COURSE IN ALL MASONRY WALLS.
7. PROVIDE CONTINUOUS BOND BEAMS AT THE TOP OF WALLS AND SPACED VERTICALLY NOT MORE THAN 72 IN FOR THE ENTIRE HEIGHT OF WALL. BOND BEAMS SHALL BE 8" DEEP WITH 2 #5 BARS UNLESS OTHERWISE NOTED.
8. CONTINUOUS REINFORCING STEEL SHALL BE LAPPED IN ACCORDANCE WITH TABLE SHOWN REQUIREMENTS UNLESS OTHERWISE NOTED. HORIZONTAL MASONRY REINFORCING SHALL BE CONTINUOUS AROUND ALL CORNERS AND AT INTERSECTING WALLS. SEE TYPICAL DETAIL.
9. ANCHOR BOLTS SHALL BE SIZE AND EMBEDMENT INDICATED.
10. ALL WALLS SHOWN ON PLAN ARE FULL HEIGHT UNLESS NOTED OTHERWISE. AND EXTEND TO JOIST BEARING ELEVATION OR UNDERSIDE OR ROOF DECK, AS APPROPRIATE.

UTILITIES:

1. CONTRACTOR TO VERIFY LOCATIONS OF ALL UNDERGROUND UTILITIES PRIOR TO COMMENCING WORK.
2. PROTECT EXISTING UTILITIES TO REMAIN DURING CONSTRUCTION.
3. PROMPTLY REPAIR DAMAGES CAUSED TO ADJACENT FACILITIES BY DEMOLITION WORK AT NO COST TO THE OWNER.
4. CONTRACTOR IS RESPONSIBLE TO REMOVE DEBRIS AND OTHER MATERIALS RESULTING FROM EXCAVATION/DEMOLTION OPERATIONS FROM BUILDING SITE. TRANSPORT AND DISPOSE OF MATERIALS OFF SITE IN ACCORDANCE WITH ALL APPLICABLE REGULATIONS.

INSPECTION:

1. ALL WORK SPECIFIED HEREIN SHALL BE INSPECTED IN ACCORDANCE WITH THE BUILDING CODE AND ALL LOCAL ORDINANCES. THE CO OR CONTRACTOR SHALL HIRE AN EXPERIENCED, QUALIFIED INSPECTOR TO PERFORM ALL REQUIRED INSPECTION WORK. INSPECTION SHALL CONSIST OF BUT NOT BE LIMITED TO, VISUAL OBSERVATIONS, MATERIALS, EQUIPMENT, CONSTRUCTION WORK FOR THE PURPOSE OF ASCERTAINING THE WORK IS IN SUBSTANTIAL CONFORMANCE WITH THE CONTRACT DOCUMENTS AND WITH THE DESIGN INTENT. THE ENGINEER WILL NOT PERFORM THE REQUIRED INSPECTION AS PART OF THIS PRESENT CONTRACT. THE ENGINEER MAY VISIT THE SITE TO ASCERTAIN GENERAL CONFORMANCE TO THE CONTRACT DOCUMENTS; HOWEVER, SUCH VISITS SHALL NOT BE RELIED UPON BY OTHERS AS ACCEPTANCE OF THE WORK, NOR SHOULD IT BE CONSTRUED TO RELIEVE THE CONTRACTOR IN ANY WAY FROM THE OBLIGATIONS OF THE CONTRACT.

SHOP DRAWINGS:

1. SHOP DRAWINGS FOR ALL STRUCTURAL ELEMENTS SHOWN ON THE CONTRACT DOCUMENTS MUST BE SUBMITTED AND REVIEWED BY THE ENGINEER. ALL CONTRACTOR MODIFICATIONS MUST BE IDENTIFIED IN WRITING AS A PROPOSED "AS EQUAL" CHANGES AT THE TIME OF SUBMISSION. IF CONTRACTOR OR CO FAILS TO SUBMIT THE SHOP DRAWINGS OR FAILS TO FOLLOW THE ABOVE "AS EQUAL" PROCEDURE, ENGINEER OF RECORD WILL NOT BE RESPONSIBLE FOR THE STRUCTURAL CERTIFICATION AND DESIGN OF THE PROJECT. SHOP DRAWINGS ARE REVIEWED BY THE ENGINEER AS A CONVENIENCE TO THE CONTRACTOR AND ARE NOT A CONTRACT DOCUMENT.

STEEL JOISTS:

1. THE SPACING, TYPE, AND INSTALLATION OF BRIDGING SHALL CONFORM TO THE SJI REQUIREMENTS UNLESS OTHERWISE NOTED. IN ADDITION, A SINGLE LINE OF BRIDGING SHALL BE PROVIDED AT THE FIRST BOTTOM CHORD PANEL POINT AT EACH END OF EVERY JOIST.
2. MECHANICAL OR OTHER EQUIPMENT SHALL NOT BE SUSPENDED FROM OR ATTACHED TO ANY BRIDGING.

STEEL:

1. STEEL ANGLES AND PLATES SHALL CONFORM TO ASTM A36, UNLESS OTHERWISE NOTED

ABBREVIATIONS:

CJ	CONTROL JOINT
CJJ	CRACK CONTROL JOINT
MIN.	MINIMUM
NOM.	NOMINAL
O.C.	ON CENTER
REINF.	REINFORCEMENT
TYP.	TYPICAL
WWF	WELDED WIRE FABRIC
W/	WITH
PL	PLASTIC LIMIT
LL	LIQUID LIMIT

GENERAL NOTES:

1. DESIGN CRITERIA:
   A. ASCE 7-10, "MINIMUM DESIGN LOAD FOR BUILDINGS AND OTHER STRUCTURES
   B. ACI 318-14 "BUILDING CODE REQUIREMENTS FOR STRUCTURAL CONCRETE"
   C. ACI 530-13, "BUILDING CODE REQUIREMENTS FOR MASONRY STRUCTURES"
   D. AISC 15TH EDITION, "MANUAL OF STEEL CONSTRUCTION"
   E. UFC 3-301-01 STRUCTURAL ENGINEERING
   F. MIL HDBK 1013/1A, "DESIGN GUIDELINES FOR PHYSICAL SECURITY OF FACILITIES"; CLASS B VAULTS
2. DESIGN DATA:
   A. LIVE LOADS
      ROOF _ _ _ _ _ _ _ _ _ _ _ _ _ _ _ 20 PSF
   B. SNOW LOADS
      GROUND SNOW LOAD_ _ _ _ _ _ _ _ _ _ 20 PSF
      ROOF SNOW LOAD_ _ _ _ _ _ _ _ _ _ 24 PSF
   C. WIND LOADS
      BASIC WIND SPEED_ _ _ _ _ _ _ _ _ _ _ 120 MPH
      WIND EXPOSURE _ _ _ _ _ _ _ _ _ _ _ B
      RISK CATEGORY _ _ _ _ _ _ _ _ _ _ _ IV
   D. SEISMIC LOADS
      RISK CATEGORY _ _ _ _ _ _ _ _ _ _ _ IV
      SEISMIC SITE CLASS _ _ _ _ _ _ _ _ _ D
      S_S _ _ _ _ _ _ _ _ _ _ _ _ _ _ _ _ 0.11
      S1 _ _ _ _ _ _ _ _ _ _ _ _ _ _ _ _ _ 0.05
      S_{DS} _ _ _ _ _ _ _ _ _ _ _ _ _ _ _ 0.117
      S_{D1} _ _ _ _ _ _ _ _ _ _ _ _ _ _ _ 0.080
   E. OTHER DATA:
      SOIL BEARING CAPACITY _ _ _ _ _ _ _ 2000 PSF
3. COORDINATE ALL OPENINGS IN FLOORS, WALL AND ROOF WITH ARCHITECTURAL, MECHANICAL AND ELECTRICAL DRAWINGS.
4. ALL WELDS SHALL BE MADE WITH CLASS E-70XX SERIES ELECTRODES, AND SHALL CONFORM TO THE REQUIREMENTS OF THE STRUCTURAL WELDING CODE OF THE AMERICAN WELDING SOCIETY, AWS D1.1.
5. ALL EQUIPMENT HUNG FROM JOISTS SHALL BE LOCATED AT PANEL POINTS.
6. THE STRUCTURE IS DESIGNED TO BE SELF-SUPPORTING AND STABLE AFTER THE BUILDING IS FULLY COMPLETED. IT IS SOLELY THE CONTRACTOR'S RESPONSIBILITY TO DETERMINE ERECTION PROCEDURES AND SEQUENCE OF CONSTRUCTION. THIS INCLUDES THE ADDITION OF ANY SHORING, SHEETING, BRACING OR TIE DOWNS AS REQUIRED. THE ENGINEER IS NOT RESPONSIBLE FOR, CONSTRUCTION MEANS AND METHODS OR JOB SITE SAFETY DURING CONSTRUCTION. IT IS SOLELY THE RESPONSIBILITY OF EACH CONTRACTOR TO FOLLOW ALL APPLICABLE SAFETY CODES AND REGULATIONS DURING CONSTRUCTION.

BAR EMBEDMENT, LAPS, AND HOOKS

Bar Size	Straight Bars: Min. Embedment Length (in.) Top	Straight Bars: Min. Embedment Length (in.) Other	Straight Bars: Min. Lap Length (in.) Top	Straight Bars: Min. Lap Length (in.) Other	Hooked Bars: Min. 90° Hook Embedment Length (in.)
3	19	15	25	20	8
4	25	19	33	25	10
5	31	24	41	32	12
6	37	29	49	38	15
7	54	42	71	55	17
8	62	48	81	63	19
9	70	54	91	71	22
10	79	61	103	80	25
11	87	67	114	88	27

Notes:

1. TABLE BASED ON ACI 318-2014
   f'c = 4000 PSI
   Fy = 60000 PSI Deformed Rebar
2. TOP BARS ARE HORIZONTAL BARS WITH MORE THAN 12" DEPTH OF CONCRETE CAST BELOW THE REINFORCEMENT.
3. HORIZONTAL WALL REINFORCEMENT IS CONSIDERED A TOP BAR.
4. REBAR EMBEDMENT, LAP, AND HOOKED LENGTHS SHOWN IN THE TABLE ARE FOR NEW CONSTRUCTION.

SYM	DESCRIPTION	DATE	APPR

NAVFAC

Professional Certification
I HEREBY CERTIFY THAT THESE DOCUMENTS WERE PREPARED OR APPROVED BY ME, AND THAT I AM A DULY LICENSED PROFESSIONAL ENGINEER UNDER THE LAWS OF THE STATE OF MARYLAND, LICENSE NO. 25390, EXPIRATION DATE: 07/17/16.
SEAL

JOHNSON, MIRMIRAN & THOMPSON
Gannett Fleming
A Joint Venture
272 Bendix Road, Suite 260
Virginia Beach, Virginia, 23452
Telephone: (757) 499-1895
Web: www.jmt.com
A/E INFO

APPROVED
FOR COMMANDER NAVFAC
ACTIVITY
JAMES FLETCHER PER CHECKLIST
SATISFACTORY TO DATE 9/27/2016
DES DRE DRW DRE CHK JRS
PM/DM RH
BRANCH MANAGER
CHIEF ENG/ARCH E. GALLAHER, PE

DEPARTMENT OF THE NAVY — NAVAL FACILITIES ENGINEERING COMMAND — WASHINGTON, D.C.
NAVFAC WASHINGTON
NAVAL AIR STATION PATUXENT RIVER — PATUXENT RIVER, MARYLAND
FY16 SPECIAL PROJECT RM12-2137
REPAIR RUNWAYS 14-32 & 6-24 - PHASE 2
VAULT 155, 1710 - GENERAL NOTES
IPT BLUE

SCALE: NONE
EPROJECT NO.: 1382137
CONSTR. CONTR. NO. N40080-17-R-0002
NAVFAC DRAWING NO. 13079929
SHEET 71 OF 191
S-001
DRAWFORM REVISION: 10 MARCH 2009

H:\59487 Pax River\Structural\Planset\10-0863-009-S-101.dwg, 9/26/2016 1:51:23 PM, gjordan
FILE NAME: H:\59487 Pax River\Structural\Planset\10-0863-009-S-101.dwg LAYOUT NAME: S-001 PLOTTED: Monday, September 26, 2016 - 1:51pm USER: gjordan

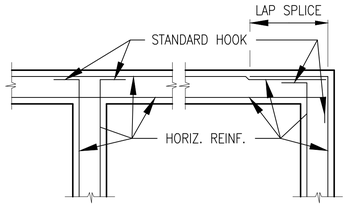

WALL CORNER REINFORCEMENT (S1)
SCALE: N.T.S.

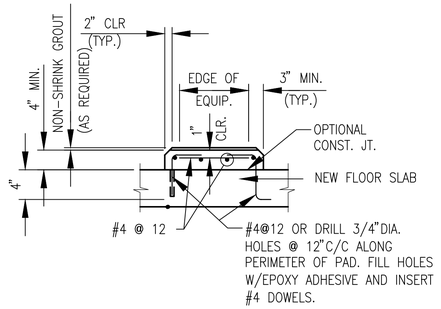

NOTE: DOWEL EMBEDMENT SHALL BE IN ACCORDANCE WITH EPOXY MANUFACTURER'S RECOMMENDATIONS.

INTERIOR CONCRETE PAD DETAIL (S2)
SCALE: N.T.S.

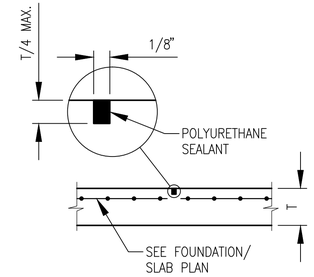

TYPICAL SLAB-ON-GRADE JOINTS (S3)
SCALE: N.T.S.

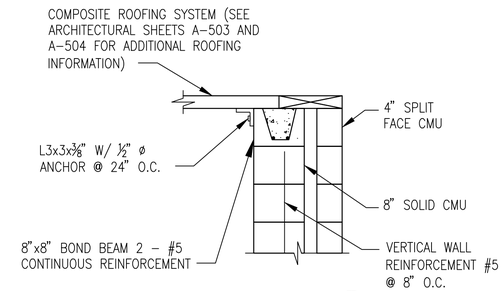

SECTION 1
SCALE: 1"=1'-0" S-501, S-502

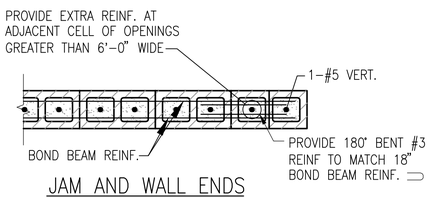

JAM AND WALL ENDS

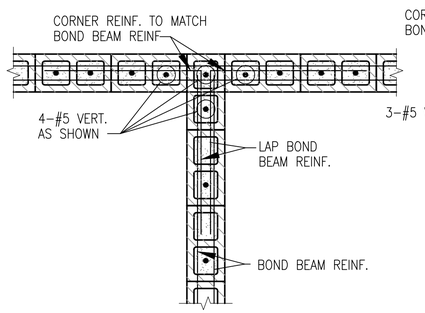

INTERSECTION

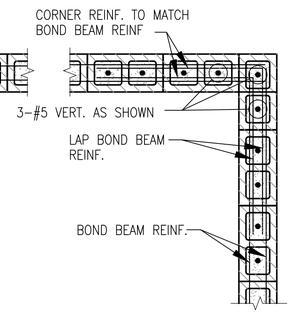

CORNERS

NOTE: GROUT ALL MASONRY CORES SOLID WHERE REINFORCING IS PLACED.

TYPICAL MASONRY WALL VERTICAL REINFORCING DETAILS (S5)
SCALE: N.T.S.

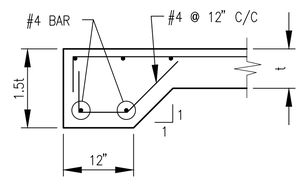

TYPICAL THICKENED SLAB (S4)
SCALE: N.T.S.

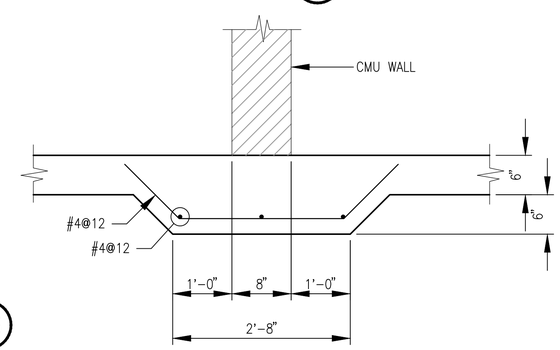

THICKENED SLAB AT INTERIOR MASONRY WALLS (S6)
SCALE: N.T.S.

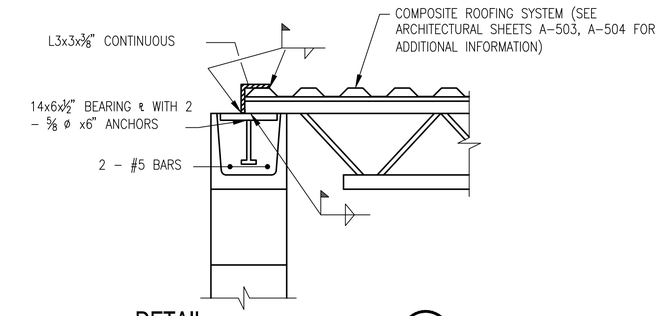

DETAIL 2
SCALE: 1 1/2"=1'-0" S-504, S-505

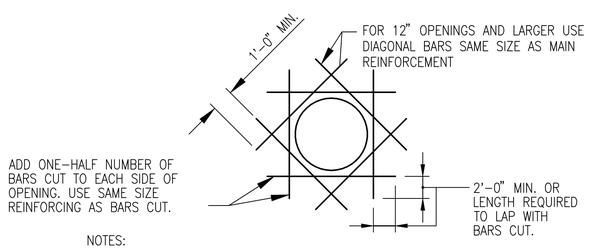

NOTES:

1. CIRCULAR OPENING SHOWN, RECTANGULAR OPENING SIMILAR.
2. EXTRA REINFORCING SHALL BE PROVIDED IN BOTH FACES UNLESS TYPICAL REINFORCING IS PLACED IN SINGLE LAYER ONLY.
3. WHEN DOWEL BARS ARE CUT PROVIDE DOWELS EACH SIDE OF OPENING IN ACCORDANCE WITH THIS DETAIL.

REINFORCING AT WALL AND SLAB OPENINGS (S7)
SCALE: N.T.S.

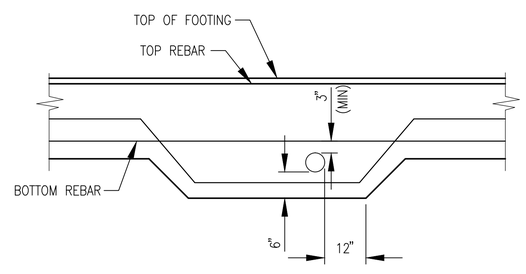

NOTE:
DO NOT INTERRUPT TOP OR BOTTOM REBARS IN FOOTING WITH CONDUIT ENCASEMENT.

TYPICAL CONDUIT ENCASEMENT FOOTING (S8)
SCALE: N.T.S.

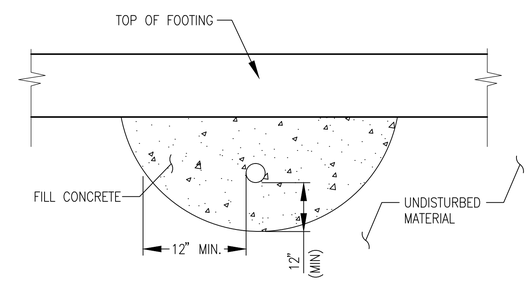

NOTE: FILL CONCRETE MUST EXTEND 6" PAST FOOTING ON EACH SIDE.

CONDUIT PENETRATION BELOW FOOTING (S9)
SCALE: N.T.S.

SYM	DESCRIPTION	DATE	APPR

NAVFAC

Professional Certification
I HEREBY CERTIFY THAT THESE DOCUMENTS WERE PREPARED OR APPROVED BY ME, AND THAT I AM A DULY LICENSED PROFESSIONAL ENGINEER UNDER THE LAWS OF THE STATE OF MARYLAND, LICENSE NO. 25390, EXPIRATION DATE: 07/17/16.
SEAL

JOHNSON, MIRMIRAN & THOMPSON
Gannett Fleming
A Joint Venture
272 Bendix Road, Suite 260
Virginia Beach, Virginia, 23452
Telephone: (757) 499-1895
Web: www.jmt.com
A/E INFO

APPROVED
FOR COMMANDER NAVFAC
ACTIVITY
JAMES FLETCHER PER CHECKLIST
SATISFACTORY TO DATE 9/27/2016
DES. DRE DRW DRE CHK JRS
PM/DM RH
BRANCH MANAGER
CHIEF ENG/ARCH E. GALLAHER, PE

DEPARTMENT OF THE NAVY
NAVAL FACILITIES ENGINEERING COMMAND
NAVFAC WASHINGTON
WASHINGTON, D.C.
PT BLUE
NAVAL AIR STATION PATUXENT RIVER
PATUXENT RIVER, MARYLAND
FY16 SPECIAL PROJECT RM12-2137
REPAIR RUNWAYS 14-32 & 6-24 - PHASE 2
VAULT 155, 1710 - GENERAL DETAILS

SCALE: NONE
EPROJECT NO.: 1382137
CONSTR. CONTR. NO. N40080-17-R-0002
NAVFAC DRAWING NO. 13079930
SHEET 72 OF 191
S-002
DRAWFORM REVISION: 10 MARCH 2009

FILE NAME: H:\59487 Pax River\Structural\Planset\10-0863-009-S-102.dwg LAYOUT NAME: S-002 PLOTTED: Monday, September 26, 2016 - 1:52pm USER: gjordan
H:\59487 Pax River\Structural\Planset\10-0863-009-S-102.dwg, 9/26/2016 1:52:31 PM, gjordan

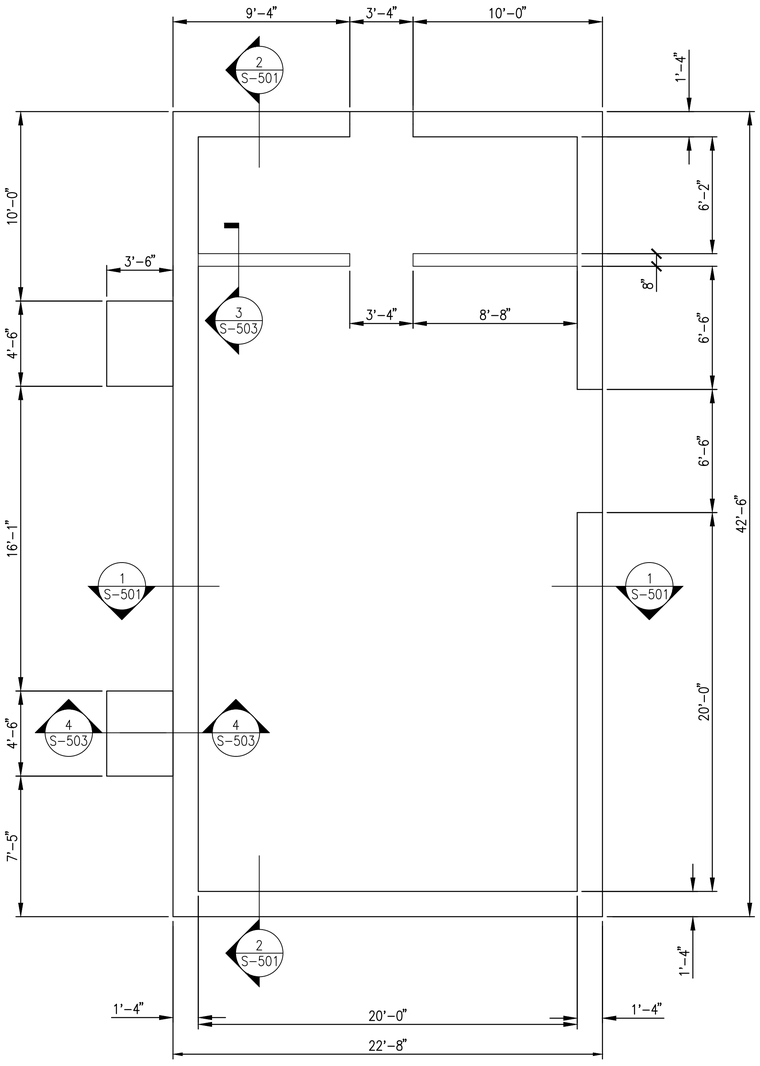

NOTES:

1. SEE DWG S-001, CONCRETE NOTE 6 FOR CONTRACTION JOINT SPACING.
2. CONTRACTOR TO COORDINATE EQUIPMENT PEDESTAL DIMENSIONS AND LOCATION WITH MECHANICAL. MAINTAIN 6" MINIMUM CLEARANCE FOR EDGE OF EQUIPMENT.

VAULT 155 FLOOR SLAB PLAN (1)

SCALE: 1/4" = 1'-0" S-401

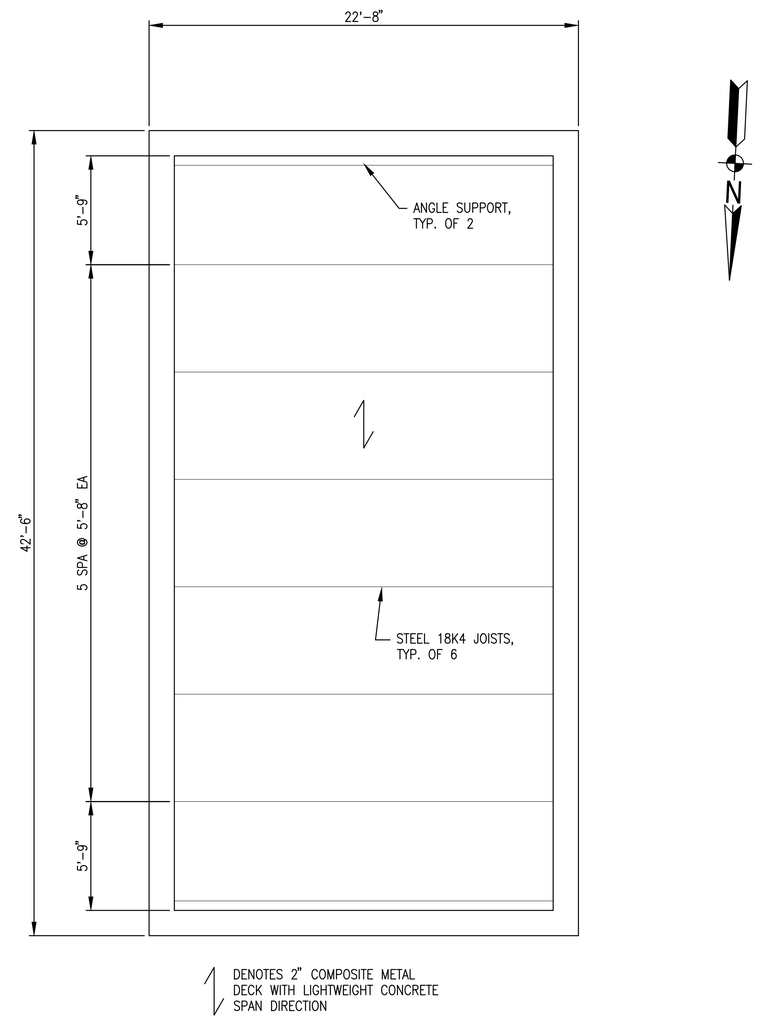

VAULT 155 ROOF PLAN (2)

SCALE: 1/4" = 1'-0" S-401

KEY MAP

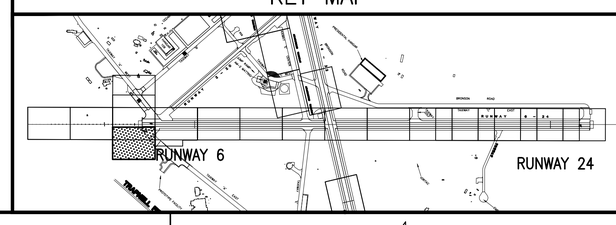

GRAPHIC SCALE

1/4"=1'-0"

1' 0 2' 4' 8'

SYM	DESCRIPTION	DATE	APPR

NAVFAC

Professional Certification

I HEREBY CERTIFY THAT THESE DOCUMENTS WERE PREPARED OR APPROVED BY ME, AND THAT I AM A DULY LICENSED PROFESSIONAL ENGINEER UNDER THE LAWS OF THE STATE OF MARYLAND, LICENSE NO. 25390, EXPIRATION DATE: 07/17/16.

SEAL

JOHNSON, MIRMIRAN & THOMPSON
Gannett Fleming
A Joint Venture
272 Bendix Road, Suite 260
Virginia Beach, Virginia, 23452
Telephone: (757) 499-1895
Web: www.jmt.com

A/E INFO.

APPROVED

FOR COMMANDER NAVFAC

ACTIVITY

JAMES FLETCHER PER CHECKLIST
SATISFACTORY TO DATE 9/27/2016
DES DRE DRW DRE CHK JRS
PM/DM RH
BRANCH MANAGER
CHIEF ENG/ARCH E. GALLAHER, PE

DEPARTMENT OF THE NAVY
NAVAL FACILITIES ENGINEERING COMMAND
NAVFAC WASHINGTON
WASHINGTON, D.C.
BY: BLUE
NAVAL AIR STATION PATUXENT RIVER
PATUXENT RIVER, MARYLAND
FY16 SPECIAL PROJECT RM12-2137
REPAIR RUNWAYS 14-32 & 6-24 - PHASE 2
VAULT 155 – FLOOR & ROOF PLANS

SCALE: 1/4" = 1'-0"
EPROJECT NO.: 1382137
CONSTR. CONTR. NO. N40080-17-R-0002
NAVFAC DRAWING NO. 13079931
SHEET 73 OF 191

S-401

DRAWFORM REVISION: 10 MARCH 2009

FILE NAME: H:\59487 Pax River\Structural\Planset\10-0863-009-S-401.dwg LAYOUT NAME: S-401 PLOTTED: Monday, September 26, 2016 - 1:54pm USER: gjordon

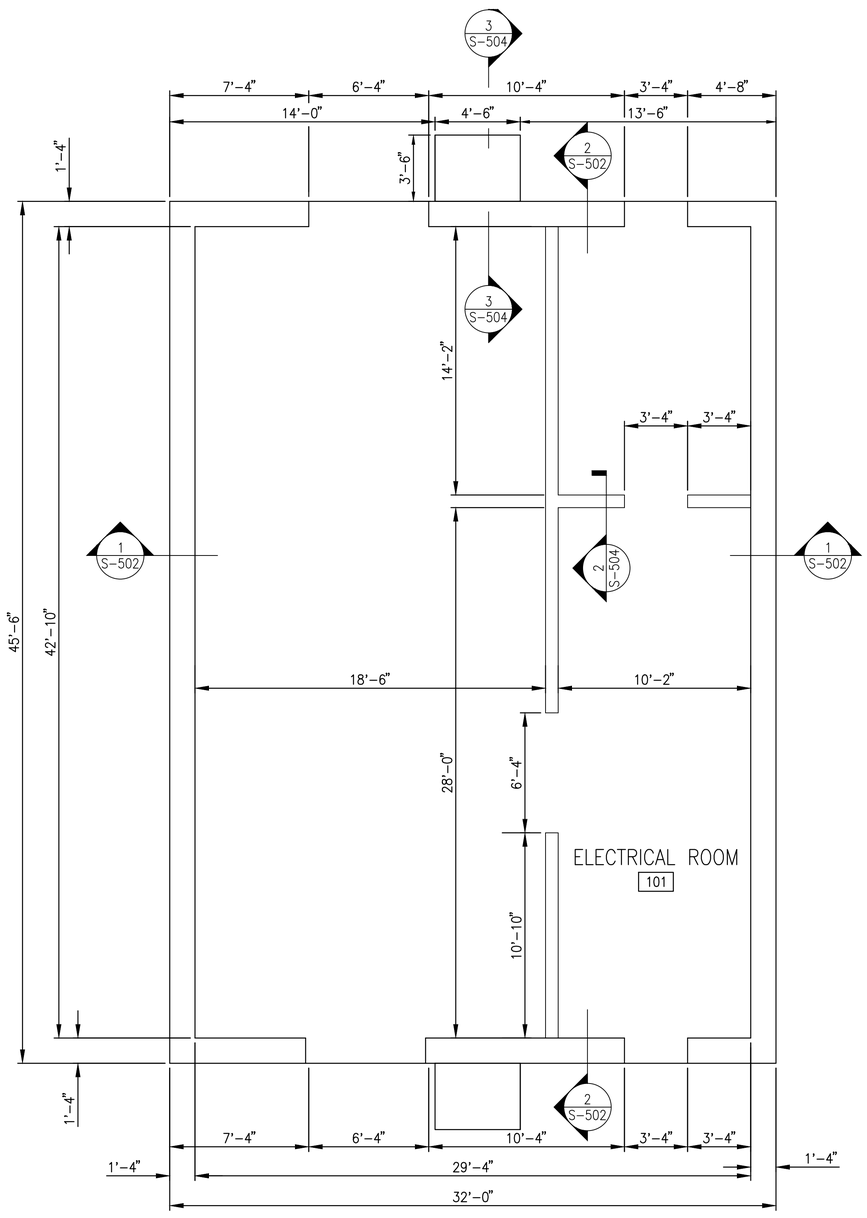

NOTES:

1. SEE DWG S-001, CONCRETE NOTE 6 FOR CONTRACTION JOINT SPACING.
2. CONTRACTOR TO COORDINATE EQUIPMENT PEDESTAL DIMENSIONS AND LOCATION WITH MECHANICAL. MAINTAIN 6" MINIMUM CLEARANCE FOR EDGE OF EQUIPMENT.

VAULT 1710 FLOOR PLAN (1)

SCALE: 1/4" = 1'-0" S-402

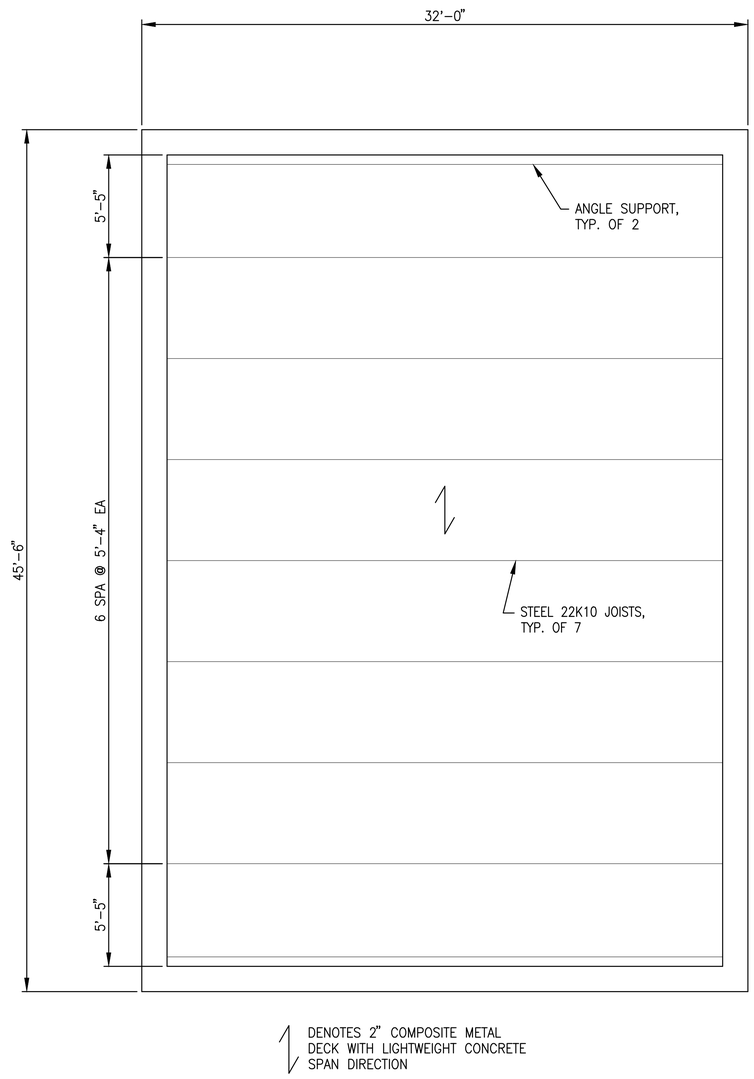

DENOTES 2" COMPOSITE METAL DECK WITH LIGHTWEIGHT CONCRETE SPAN DIRECTION

VAULT 1710 ROOF PLAN (2)

SCALE: 1/4" = 1'-0" S-402

KEY MAP

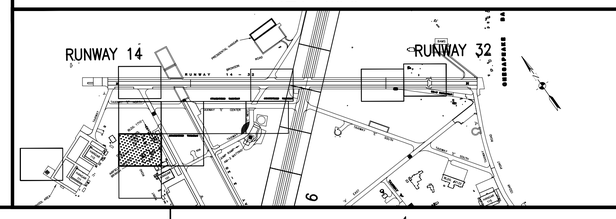

GRAPHIC SCALE

1/4"=1'-0"

1' 0 2' 4' 8'

MKS	DESCRIPTION	DATE	APPR

NAVFAC

Professional Certification
I HEREBY CERTIFY THAT THESE DOCUMENTS WERE PREPARED OR APPROVED BY ME, AND THAT I AM A DULY LICENSED PROFESSIONAL ENGINEER UNDER THE LAWS OF THE STATE OF MARYLAND, LICENSE NO. 25390, EXPIRATION DATE: 07/17/16.
SEAL

JOHNSON, MIRMIRAN & THOMPSON
Gannett Fleming
A Joint Venture
272 Bendix Road, Suite 260
Virginia Beach, Virginia, 23452
Telephone: (757) 499-1895
Web: www.jmt.com

A/E INFO

APPROVED
FOR COMMANDER NAVFAC
ACTIVITY
JAMES FLETCHER PER CHECKLIST
SATISFACTORY TO DATE 9/27/2016
DES DRE DRW DRE CHK JRS
PM/DM RH
BRANCH MANAGER
CHIEF ENG/ARCH E. GALLAHER, PE

DEPARTMENT OF THE NAVY
NAVAL FACILITIES ENGINEERING COMMAND
WASHINGTON, D.C.
NAVFAC WASHINGTON
NAVAL AIR STATION PATUXENT RIVER
PATUXENT RIVER, MARYLAND
FY16 SPECIAL PROJECT RM12-2137
REPAIR RUNWAYS 14-32 & 6-24 - PHASE 2
VAULT 1710 - FLOOR & ROOF PLANS

IPT BLUE

SCALE: 1/4" = 1'-0"
EPROJECT NO.: 1382137
CONSTR. CONTR. NO. N40080-17-R-0002
NAVFAC DRAWING NO. 13079932
SHEET 74 OF 191
S-402

DRAWFORM REVISION: 10 MARCH 2009

FILE NAME: H:\59487 Pax River\Structural\Planset\10-0863-009-S-402.dwg LAYOUT NAME: S-402 PLOTTED: Monday, September 26, 2016 - 1:54pm USER: gjordon

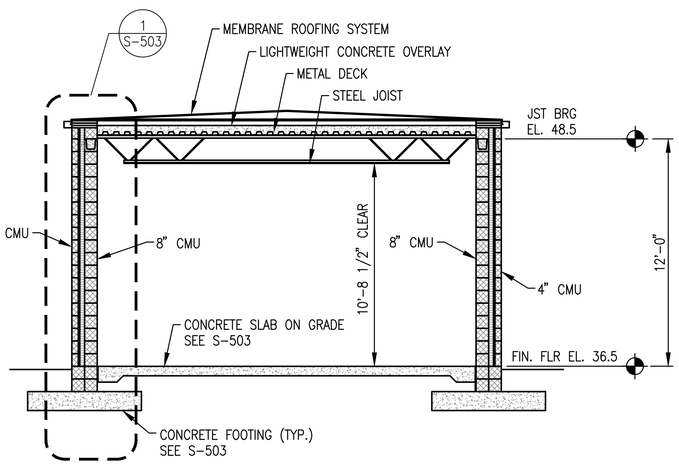

VAULT 155 BUILDING SECTION (1)

SCALE: 1/4" = 1'-0" S-401

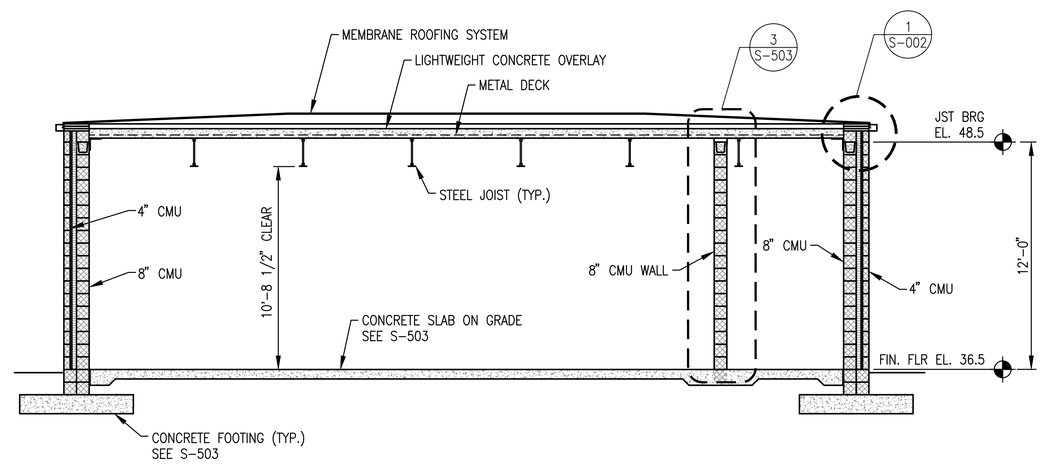

VAULT 155 BUILDING SECTION (2)

SCALE: 1/4" = 1'-0" S-401

GRAPHIC SCALE

1/4"=1'-0"

1' 0 2' 4' 8'

SYM	DESCRIPTION	DATE	APPR

Professional Certification

I HEREBY CERTIFY THAT THESE DOCUMENTS WERE PREPARED OR APPROVED BY ME, AND THAT I AM A DULY LICENSED PROFESSIONAL ENGINEER UNDER THE LAWS OF THE STATE OF MARYLAND, LICENSE NO. 25390, EXPIRATION DATE: 07/17/16.

SEAL

JOHNSON, MIRMIRAN & THOMPSON
Gannett Fleming
A Joint Venture
272 Bendix Road, Suite 260
Virginia Beach, Virginia, 23452
Telephone: (757) 499-1895
Web: www.jmt.com

A/E INFO

APPROVED

FOR COMMANDER NAVFAC

ACTIVITY

JAMES FLETCHER PER CHECKLIST
SATISFACTORY TO DATE 9/27/2016

DES DRE DRW DRE CHK JRS

PM/DM RH

BRANCH MANAGER

CHIEF ENG/ARCH E. GALLAHER, PE

DEPARTMENT OF THE NAVY
NAVAL FACILITIES ENGINEERING COMMAND
WASHINGTON, D.C.
NAVFAC WASHINGTON
IPT BLUE
NAVAL AIR STATION PATUXENT RIVER
PATUXENT RIVER, MARYLAND
FY16 SPECIAL PROJECT RM12-2137
REPAIR RUNWAYS 14-32 & 6-24 - PHASE 2
VAULT 155 – BUILDING SECTIONS

SCALE: 1/4" = 1'-0"

EPROJECT NO.: 1382137

CONSTR. CONTR. NO. N40080-17-R-0002

NAVFAC DRAWING NO. 13079933

SHEET 75 OF 191

S-501

DRAWFORM REVISION: 10 MARCH 2009

FILE NAME: H:\59487 Pax River\Structural\Planset\10-0863-009-S-501.dwg, 9/26/2016 1:56:40 PM, gpardon
H:\59487 Pax River\Structural\Planset\10-0863-009+S-501.dwg LAYOUT NAME: S-501 PLOTTED: Monday, September 26, 2016 - 1:56pm USER: gpardon

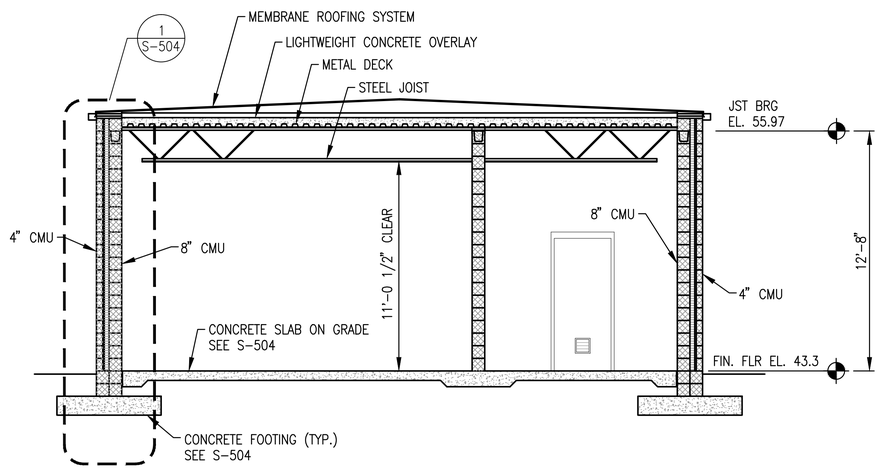

VAULT 1710 BUILDING SECTION 1

SCALE: 1/4" = 1'-0" S-402

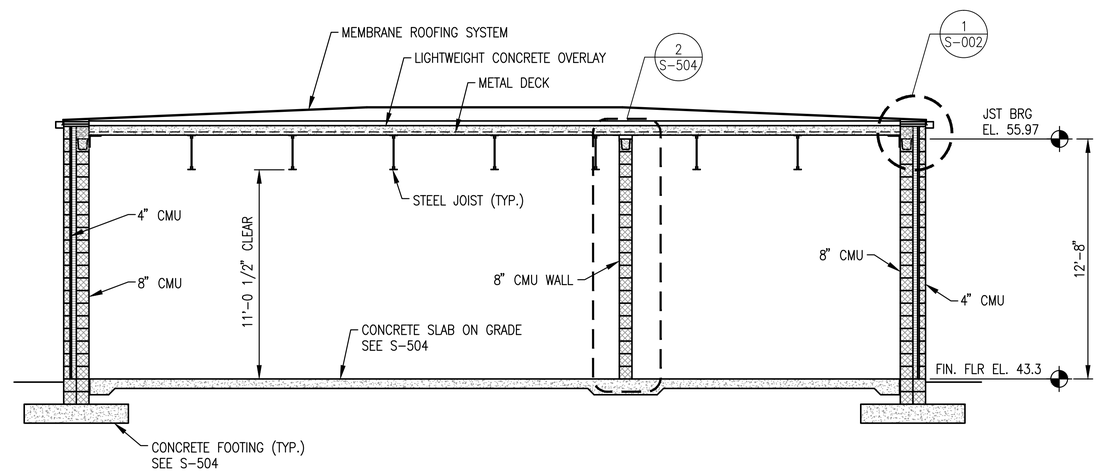

VAULT 1710 BUILDING SECTION 2

SCALE: 1/4" = 1'-0" S-402

GRAPHIC SCALE

1/4"=1'-0"

1' 0 2' 4' 8'

SYM	DESCRIPTION	DATE	APPR

NAVFAC

STATE OF MARYLAND

Professional Certification

I HEREBY CERTIFY THAT THESE DOCUMENTS WERE PREPARED OR APPROVED BY ME, AND THAT I AM A DULY LICENSED PROFESSIONAL ENGINEER UNDER THE LAWS OF THE STATE OF MARYLAND, LICENSE NO. 25390, EXPIRATION DATE: 07/17/16.

SEAL

JOHNSON, MIRMIRAN & THOMPSON
Gannett Fleming
A Joint Venture
272 Bendix Road, Suite 260
Virginia Beach, Virginia, 23452
Telephone: (757) 499-1895
Web: www.jmt.com

A/E INFO

APPROVED

FOR COMMANDER NAVFAC

ACTIVITY

JAMES FLETCHER PER CHECKLIST

SATISFACTORY TO DATE 9/27/2016

DES DRE DRW DRE CHK JRS

PM/OM RH

BRANCH MANAGER

CHIEF ENG/ARCH E. GALLAHER, PE

DEPARTMENT OF THE NAVY
NAVAL FACILITIES ENGINEERING COMMAND
NAVFAC WASHINGTON
WASHINGTON, D.C.

PT BLUE

NAVAL AIR STATION PATUXENT RIVER
PATUXENT RIVER, MARYLAND

FY16 SPECIAL PROJECT RM12-2137
REPAIR RUNWAYS 14-32 & 6-24 - PHASE 2

VAULT 1710 - BUILDING SECTIONS

SCALE: 1/4" = 1'-0"

EPROJECT NO.: 1382137

CONSTR. CONTR. NO. N40080-17-R-0002

NAVFAC DRAWING NO. 13079934

SHEET 76 OF 191

S-502

DRAWFORM REVISION: 10 MARCH 2009

FILE NAME: H:\59487 Pax River\Structural\Planset\10-0863-009-S-502.dwg LAYOUT NAME: S-502 PLOTTED: Monday, September 26, 2016 - 1:57pm USER: gjordon

H:\59487 Pax River\Structural\Planset\10-0863-009-S-502.dwg, 9/26/2016 1:57:50 PM, gjordon

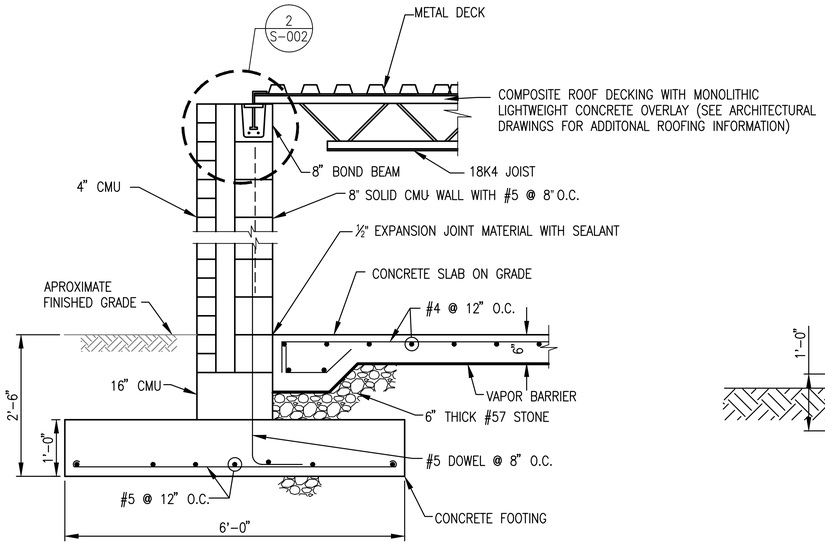

NOTE: COMPOSITE DECKING SHALL BE CAPABLE OF SUPPORTING A MINIMUM TOTAL LOAD OF 150 PSF WITH A 6' SPAN

VAULT 155 WALL SECTION (1)

SCALE: 3/4"=1'-0" S-501

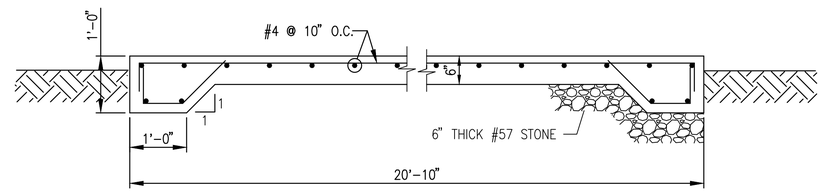

NOTE:
SLAB DIMENSIONS 20'-10"x8'-9" TO BE COORDINATED WITH APPROVED EQUIPMENT

VAULT 155 TYPICAL GENERATOR SLAB (2)

SCALE: 3/4"=1'-0"

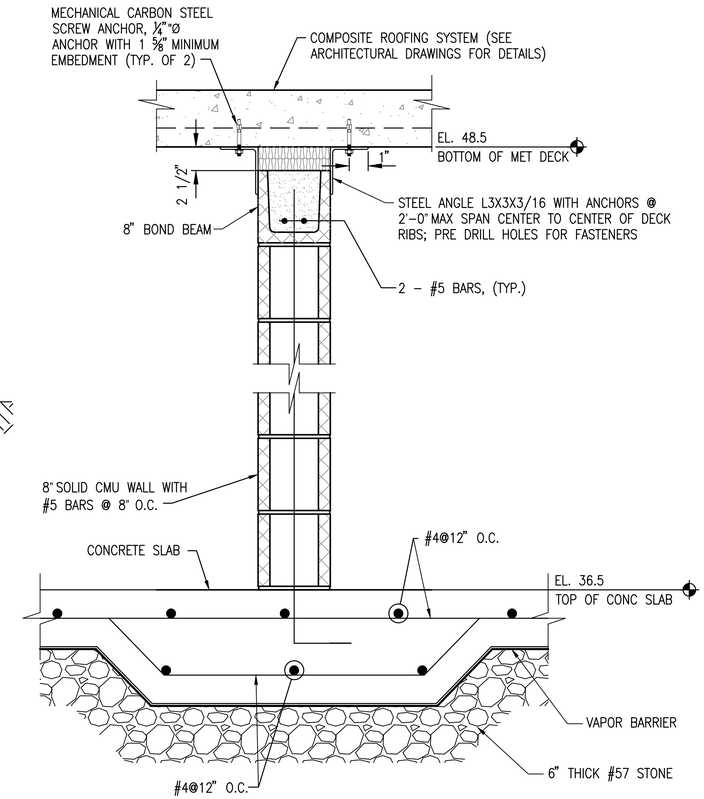

NOTE: MECHANICAL ANCHORS SHALL BE CAPABLE OF SUPPORTING 1000# EACH

VAULT 155 WALL DETAIL (3)

SCALE: 1 1/2"=1'-0" S-401

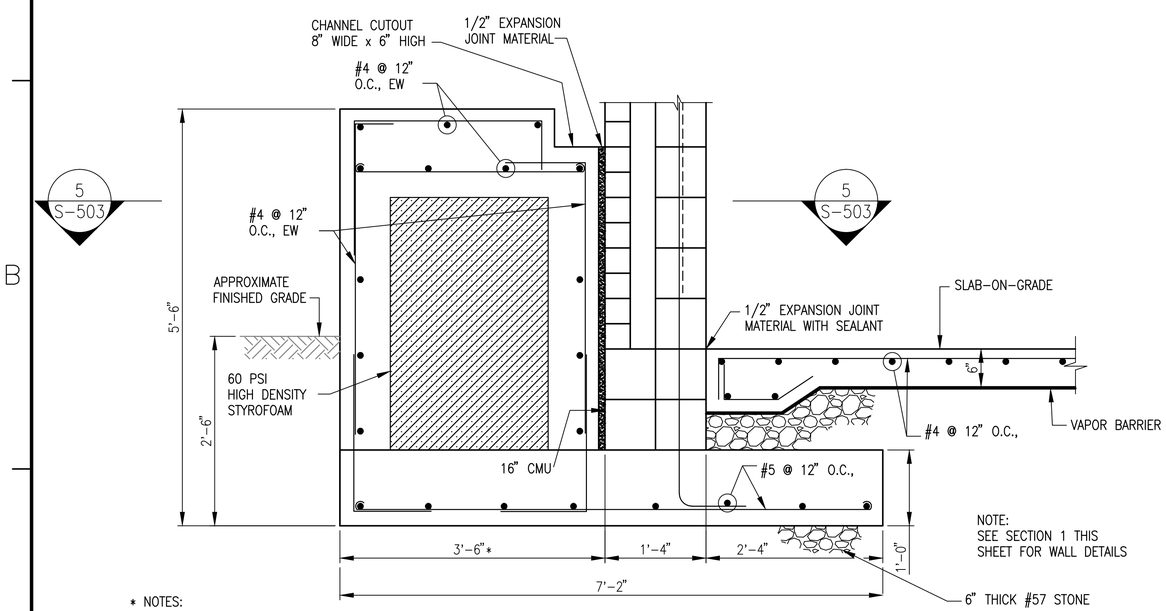

NOTE:
SEE SECTION 1 THIS SHEET FOR WALL DETAILS

* NOTES:

1. CONTRACTOR TO COORDINATE DIMENSIONS WITH MECHANICAL. PROVIDE 6" MIN. CLEARANCE FROM EDGE OF EQUIPMENT IN ALL DIRECTIONS. 3'-6" DIMENSION IS MINIMUM. THE LENGTH IS CURRENTLY SHOWN AS 4'-6" PER DRAWING S-401. THIS DIMENSION MAY BE ADJUSTED BASED ON THE SIZE OF THE HVAC UNIT.
2. IF AN EXTENDED FOOTING IS REQUIRED TO MEET THE NEEDS OF A LARGER UNIT, THE WIDER FOOTING IS ONLY NECESSARY AT THE UNIT/SUPPORT LOCATIONS AS SPECIFIED ON S-401.
3. SLOPE CONCRETE CHANNEL CUTOUT TO DRAIN.
4. CONTRACTOR SHALL COORDINATE LOCATION AND SIZE OF DRAIN PIPING CHANNEL WITH APPROVED MANUFACTURERS.
5. WALL AND SLAB HVAC SUPPORT AT THIS SECTION SHALL CONSIST OF LIGHT WEIGHT CONCRETE.

VAULT 155 WALL SECTION (4)

SCALE: 1"=1'-0" S-401

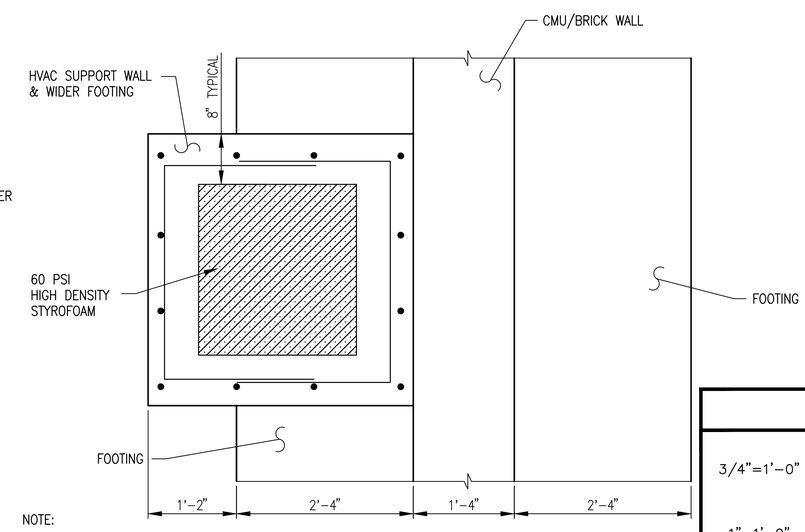

NOTE:
FOOTING SHALL BE BUMPED OUT AT THE HVAC SUPPORT TO ACCOMMODATE LARGER EQUIPMENT.

VAULT 155 SECTION (5)

SCALE: 1"=1'-0" S-503

GRAPHIC SCALE

3/4"=1'-0" 1' 6" 0 1' 2' 3'

1"=1'-0" 1' 6" 0 6" 1' 2'

1 1/2"=1'-0" 3210 3" 6" 12" 24"

SYM	DESCRIPTION	DATE	APPR

NAVFAC

Professional Certification
I HEREBY CERTIFY THAT THESE DOCUMENTS WERE PREPARED OR APPROVED BY ME, AND THAT I AM A DULY LICENSED PROFESSIONAL ENGINEER UNDER THE LAWS OF THE STATE OF MARYLAND, LICENSE NO. 25390, EXPIRATION DATE: 07/17/16.
SEAL

JOHNSON, MIRMIRAN & THOMPSON
Gannett Fleming
A Joint Venture
272 Bendix Road, Suite 260
Virginia Beach, Virginia, 23452
Telephone: (757) 499-1895
Web: www.jmt.com
A/E INFO

APPROVED
FOR COMMANDER NAVFAC
ACTIVITY
JAMES FLETCHER PER CHECKLIST
SATISFACTORY TO DATE 9/27/2016
DES DRE DRW DRE CHK JRS
PM/DM RH
BRANCH MANAGER
CHIEF ENG/ARCH E. GALLAHER, PE

DEPARTMENT OF THE NAVY
NAVAL FACILITIES ENGINEERING COMMAND
NAVFAC WASHINGTON
WASHINGTON, D.C.
NAVAL AIR STATION PATUXENT RIVER
PATUXENT RIVER, MARYLAND
FY16 SPECIAL PROJECT RM12-2137
REPAIR RUNWAYS 14-32 & 6-24 - PHASE 2
VAULT 155 - WALL SECTIONS AND DETAILS
BY BLUE

SCALE: AS SHOWN
EPROJECT NO.: 1382137
CONSTR. CONTR. NO. N40080-17-R-0002
NAVFAC DRAWING NO. 13079935
SHEET 77 OF 191
S-503
DRAWFORM REVISION: 10 MARCH 2009

FILE NAME: H:\59487 Pax River\Structural\Planset\10-0863-009-S-503.dwg LAYOUT NAME: S-503 PLOTTED: Monday, September 26, 2016 - 2:05pm USER: gjordon

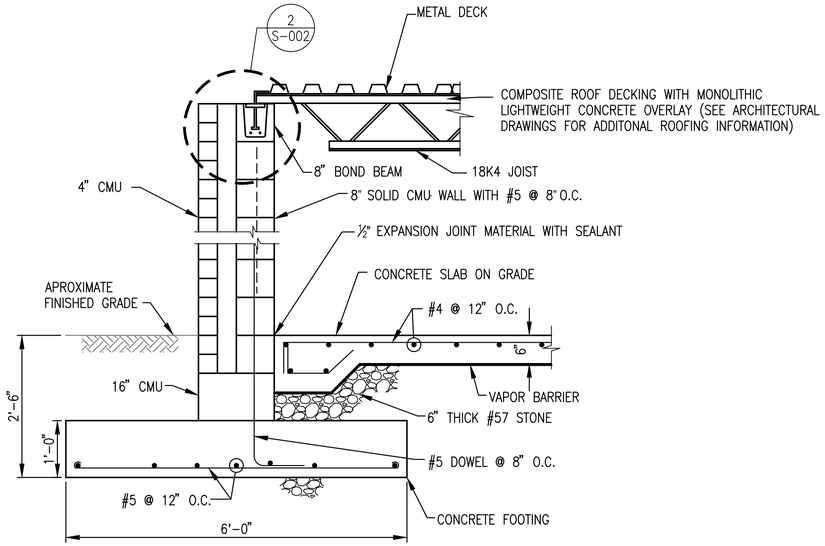

NOTE: COMPOSITE DECKING SHALL BE CAPABLE OF SUPPORTING A MINIMUM TOTAL LOAD OF 150 PSF WITH A 6' SPAN

VAULT 1710 WALL SECTION (1)

SCALE: 3/4"=1'-0" S-502

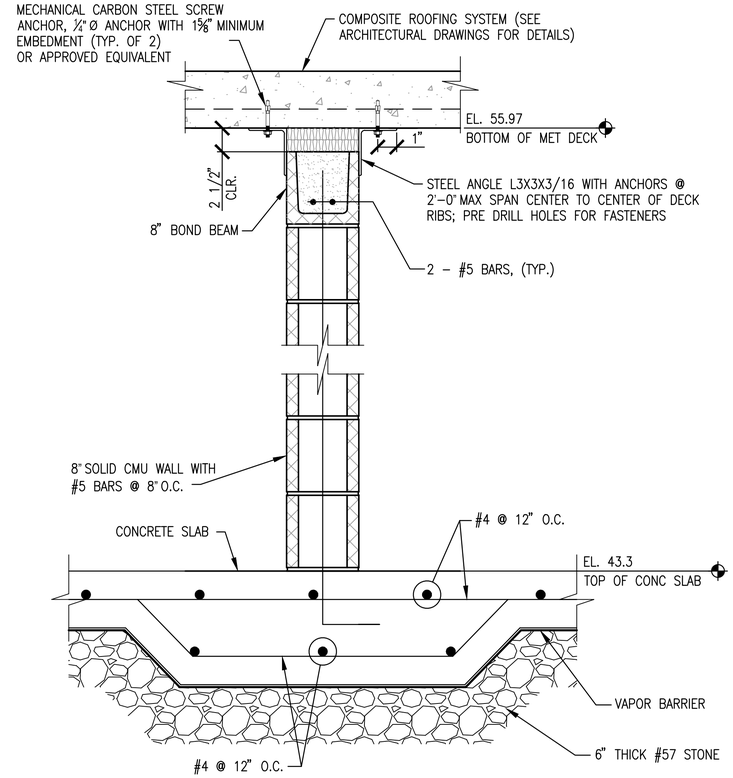

NOTE: MECHANICAL ANCHORS SHALL BE CAPABLE OF SUPPORTING 1000# EACH

VAULT 1710 WALL DETAIL (2)

SCALE: 1 1/2"=1'-0" S-402

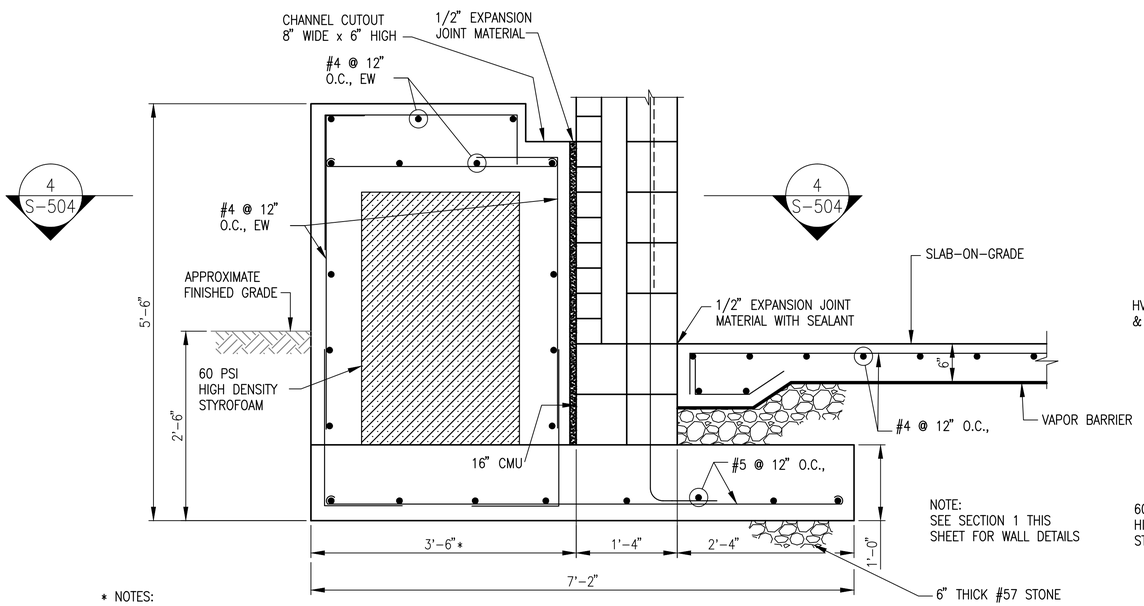

* NOTES:

1. CONTRACTOR TO COORDINATE DIMENSIONS WITH MECHANICAL. PROVIDE 6" MIN. CLEARANCE FROM EDGE OF EQUIPMENT IN ALL DIRECTIONS. 3'-6" DIMENSION IS MINIMUM. THE LENGTH IS CURRENTLY SHOWN AS 4'-6" PER DRAWING S-402. THIS DIMENSION MAY BE ADJUSTED BASED ON THE SIZE OF THE HVAC UNIT.
2. IF AN EXTENDED FOOTING IS REQUIRED TO MEET THE NEEDS OF A LARGER UNIT, THE WIDER FOOTING IS ONLY NECESSARY AT THE UNIT/SUPPORT LOCATIONS AS SPECIFIED ON S-402.
3. SLOPE CONCRETE CHANNEL CUTOUT TO DRAIN.
4. CONTRACTOR SHALL COORDINATE LOCATION AND SIZE OF DRAIN PIPING CHANNEL WITH APPROVED MANUFACTURERS.
5. WALL AND SLAB HVAC SUPPORT AT THIS SECTION SHALL CONSIST OF LIGHT WEIGHT CONCRETE.

VAULT 1710 WALL SECTION (3)

SCALE: 1"=1'-0" S-402

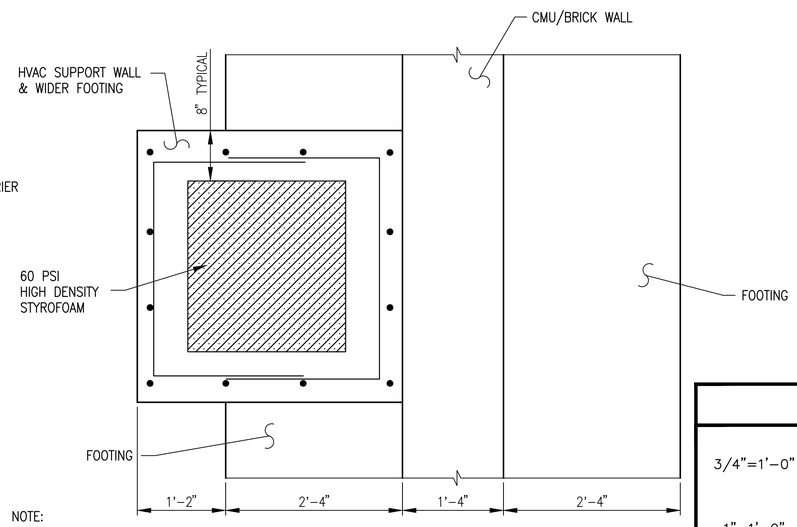

NOTE:

FOOTING SHALL BE BUMPED OUT AT THE HVAC SUPPORT TO ACCOMMODATE LARGER EQUIPMENT.

VAULT 1710 SECTION (4)

SCALE: 1"=1'-0" S-504

GRAPHIC SCALE

3/4"=1'-0" 1' 6" 0 1' 2' 3'

1"=1'-0" 1' 6" 0 6" 1' 2'

1 1/2"=1'-0" 3210 3" 6" 12" 24"

SYM	DESCRIPTION	DATE	APPR

NAVFAC

Professional Certification
I HEREBY CERTIFY THAT THESE DOCUMENTS WERE PREPARED OR APPROVED BY ME, AND THAT I AM A DULY LICENSED PROFESSIONAL ENGINEER UNDER THE LAWS OF THE STATE OF MARYLAND, LICENSE NO. 25390, EXPIRATION DATE: 07/17/16. SEAL

JOHNSON, MIRMIRAN & THOMPSON
Gannett Fleming
A Joint Venture
272 Bendix Road, Suite 260
Virginia Beach, Virginia, 23452
Telephone: (757) 499-1895
Web: www.jmt.com

A/E INFO.

APPROVED

FOR COMMANDER NAVFAC

ACTIVITY

JAMES FLETCHER PER CHECKLIST
SATISFACTORY TO DATE 9/27/2016
DES DRE DRW DRE CHK JRS
PM/DM RH
BRANCH MANAGER
CHIEF ENG/ARCH E. GALLAHER, PE

DEPARTMENT OF THE NAVY
NAVAL FACILITIES ENGINEERING COMMAND
NAVFAC WASHINGTON
WASHINGTON, D.C.
NAVAL AIR STATION PATUXENT RIVER
PATUXENT RIVER, MARYLAND
FY16 SPECIAL PROJECT RM12-2137
REPAIR RUNWAYS 14-32 & 6-24 - PHASE 2
VAULT 1710 – WALL SECTIONS AND DETAILS

IP BLUE

SCALE: AS SHOWN
EPROJECT NO.: 1382137
CONSTR. CONTR. NO. N40080-17-R-0002
NAVFAC DRAWING NO. 13079936
SHEET 78 OF 191

S-504

DRAWFORM REVISION: 10 MARCH 2009

FILE NAME: H:\59487 Pax River\Structural\Planset\10-0863-009-S-504.dwg LAYOUT NAME: S-504 PLOTTED: Monday, September 26, 2016 - 2:12pm USER: gjordon

ARCHITECTURAL LEGEND:

- BRICK
- CMU
- ACOUSTICAL CMU
- CMIU
- SGFT / GLAZED CMU
- CONCRETE
- GYP BD / GROUT
- BATT INSULATION
- RIGID INSULATION
- COARSE AGGREGATE /BALLAST
- STEEL
- ALUMINUM
- FINISH LUMBER
- DIMENSIONAL LUMBER
- SHIM
- PLYWOOD
- ACOUSTICAL PANEL
- TILE
- EARTH
- (3) DOOR NUMBER REFERENCE
- [101] ROOM NUMBER REFERENCE
- L-2 LINTEL TYPE REFERENCE
- LV2 LOUVER TYPE REFERENCE
- 6 / A-501 – SECTION REFERENCE – DRAWING ON WHICH SECTION APPEARS
- 4 / A-501 – ELEVATION REFERENCE – DRAWING ON WHICH ELEVATION APPEARS
- BRACKET MOUNTED FIRE EXTINGUSHER
- LARGE SCALE REFERENCE

ABBREVIATIONS:

ABV	ABOVE
AC	AIR CONDITIONER
ACST	ACOUSTIC
ADDL	ADDITIONAL
ADJ	ADJACENT
AFF	ABOVE FINISH FLOOR
AGGR	AGGREGATE
AL	ALUMINUM
ALT	ALTERNATE
ARCH	ARCHITECTURAL
ASB	ASBESTOS
ASPH	ASPHALT
ASPHRS	ASPHALT ROOF SHINGLES
ASSN	ASSOCIATION
ASST	ASSISTANT
ASSY	ASSEMBLY
AVE	AVENUE
AVG	AVERAGE
BALC	BALCONY
BD	BOARD
BETW	BETWEEN
BLDG	BUILDING
BLKG	BLOCKING
BLR	BOILER
BM	BEAM
BM	BENCHMARK
BOT	BOTTOM
BP	BASE PLATE
BRDG	BRIDGING
BRG	BEARING
BS	BOTH SIDES
BSMT	BASEMENT
CAB	CABINET
CAP	CAPACITY
CARP	CARPET
CDR	COILING DOOR
CER	CERAMIC
CER TILE	CERAMIC TILE
CI	CAST IRON
CIP	CAST-IRON PIPE
CJ	CONTROL JOINT
CL	CENTERLINE
CLG	CEILING
CLO	CLOSET
CLR	CLEAR
CMIU	CONCRETE MASONRY INSULATED UNIT
CMU	CONCRETE MASONRY UNIT
CNCL	CONCEALED
CO	CLEANOUT
CO	COMPANY
COL	COLUMN
COMP	COMPOSITION
CONC	CONCRETE
CONSTR	CONSTRUCTION
CONT	CONTINUOUS
CONTR	CONTRACTOR
COORD	COORDINATE
CRV	CURVED
CSK	COUNTERSINK
CTD	COATED
CTR	CENTER
CUH	CABINET UNIT HEATER
D	DEPTH
DBL	DOUBLE
DEG	DEGREE
DEPT	DEPARTMENT
DET	DETAIL
DGL	DIAGONAL
DIA	DIAMETER
DIM	DIMENSION
DIV	DIVISION
DL	DEAD LOAD
DMPF	DAMPPROOFING
DN	DOWN
DPN	DEMOUNTABLE PARTITION MANUFACTURER
DR	DOOR
DS	DOWNSPOUT
DW	DISHWASHER
DWG(S)	DRAWING(S)
E	EAST
EA	EACH
EGEN	EMERGENCY GENERATOR
EF	EXHAUST FAN
EIFS	EXTERIOR INSULATION & FINISH SYSTEM
EL	ELEVATION
ELEC	ELECTRICAL
ELEV	ELEVATOR
ENTR	ENTRANCE
EQ	EQUAL
EQUIP	EQUIPMENT
EWC	ELECTRIC WATER COOLER
EXH	EXHAUST
EXIST	EXISTING
EXP	EXPANSION
EXP JT	EXPANSION JOINT
EXT	EXTERIOR
FAB	FABRICATE
FBD	FIBERBOARD
FD	FLOOR DRAIN
FDN	FOUNDATION
FDR	FIRE DOOR
FE	FIRE EXTINGUISHER
FEC	FIRE EXTINGUISHER & CABINET
FHY	FIRE HYDRANT
FIN	FINISH
FL	FLASHING
FLEX	FLEXIBLE
FLG	FLANGE
FLR	FLOOR
FLRG	FLOORING
FP	FIREPROOF
FRP	FIBERGLASS-REINFORCED PLASTICS
FT	FOOT
FTG	FOOTING
FURN	FURNITURE
GA	GAUGE
GALV	GALVANIZED
GAR	GARAGE
GEN	GENERATOR
GL	GLASS
GLU-LAM	GLUE-LAMINATED
GOVT	GOVERNMENT
GR	GRADE
GRD	GROUND
GVL	GRAVEL
GWB	GYPSUM WALLBOARD
GYP	GYPSUM
H	HIGH
HDWE	HARDWARE
HM	HOLLOW METAL
HMD	HOLLOW METAL DOOR
HORIZ	HORIZONTAL
HPT	HIGH POINT
HT	HEIGHT
HTR	HEATER
HVAC	HEATING, VENTILATING, & AIR CONDITIONING
ID	INSIDE DIAMETER
IE	THAT IS
IH	INTAKE HOOD
INSUL	INSULATION
INTR	INTERIOR
JST	JOIST
JT	JOINT
LAB	LABORATORY
LAM	LAMINATE
LAV	LAVATORY
LG	LENGTH
LH	LEFT HAND
LIB	LIBRARY
LIN	LINEAR
LL	LIVE LOAD
LLH	LONG LEG HORIZONTAL
LLV	LONG LEG VERTICAL
LPT	LOW POINT
LT	LIGHT
LWC	LIGHTWEIGHT CONCRETE
MAINT	MAINTENANCE
MAS	MASONRY
MATL	MATERIAL
MAX	MAXIMUM
MECH	MECHANICAL
MEMB	MEMBRANE
MEZZ	MEZZANINE
MFR	MANUFACTURER
MGR	MANAGER
MH	MANHOLE
MIL	MILITARY
MIN	MINIMUM
MISC	MISCELLANEOUS
MET	METAL
ML	METAL LATH
MLDG	MOLDING
MLP	METAL LATH AND PLASTER
MO	MASONRY OPENING
MOD	MOTOR OPERATED DAMPER
MTG	MOUNTING
N	NORTH
NA	NOT APPLICABLE
NIC	NOT IN CONTRACT
NO	NUMBER
NRC	NOISE-REDUCTION COEFFICIENT
NTS	NOT TO SCALE
OA	OVERALL
OC	ON CENTER
OD	OUTSIDE DIAMETER
OFF	OFFICE
OH	OPPOSITE HAND
OHDR	OVERHEAD DOOR
OPNG	OPENING
OPP	OPPOSITE
OSB	ORIENTED STRAND BOARD
P/L	PROPERTY LINE
PASS	PASSENGER
PEB	PRE-ENGINEERED BUILDING
PERF	PERFORATED
PL	PLATE
PLAS	PLASTER
PLBG	PLUMBING
PLYWD	PLYWOOD
PNL	PANEL
PNT	PAINT
PORC	PORCELAIN
PR	PAIR
PREFAB	PREFABRICATED
PROJ	PROJECT
PSF	POUNDS PER SQUARE FOOT
PSI	POUNDS PER SQUARE INCH
PT	POINT
PTD	PAINTED
PTN	PARTITION
PVC	POLYVINYL CHLORIDE
QTF	QUARRY-TILE FLOOR
R	RADIUS
R	RISER
RD	ROOF DRAIN
REFR	REFRIGERATOR
REINF	REINFORCE
REQD	REQUIRED
RET	RETURN
REV	REVISION
REG	REGISTER
RFG	ROOFING
RH	RIGHT HAND
RM	ROOM
RWC	RAIN WATER CONDUCTOR
S	SOUTH
SAPC	SUSPENDED ACOUSTICAL PANEL CEILING
SCHED	SCHEDULE
SDG	SIDING
SEC	SECTION
SF	SQUARE FOOT
SGFT	STRUCTURAL GLAZED FACING TILE
SH	SHOWER
SHM	SECURITY HOLLOW METAL
SHT	SHEET
SI	INTERNATIONAL SYSTEM OF UNITS
SIM	SIMILAR
SKY	SKYLIGHT
SLDR	SLIDING DOOR
SMLS	SEAMLESS
SPEC	SPECIFICATION
SPKLR	SPRINKLER
SPKR	SPEAKER
SQ	SQUARE
SS	STAINLESS STEEL
ST	STAINED
STD	STANDARD
STL	STEEL
STOR	STORAGE
STRUCT	STRUCTURE/STRUCTURAL
STWY	STAIRWAY
SUPT	SUPERINTENDENT
SUPVR	SUPERVISOR
SURF	SURFACE
SUSP	SUSPENDED/SUSPENSION
SYS	SYSTEM
T	TREAD
T/	TOP OF
T&B	TOP AND BOTTOM
T&G	TONGUE AND GROOVE
TAN	TANGENT
TDD	TELECOMMUNICATION DISPLAY DEVICE
TEL	TELEPHONE
TEMP	TEMPERED
TER	TERRAZZO
THRU	THROUGH
TLT	TOILET
TRTD	TREATED
TYP	TYPICAL
UNO	UNLESS NOTED OTHERWISE
VAT	VINYL ASBESTOS TILE
VCT	VINYL COMPOSITION TILE
VERT	VERTICAL
VIF	VERIFY IN FIELD
VTR	VENT THRU ROOF
W	WEST
W	WIDE
W/	WITH
W/O	WITHOUT
WBD	WALLBOARD
WC	WATER CLOSET
WD	WOOD
WDR	WOOD DOOR
WH	WATER HEATER
WTRPRF	WATERPROOFING
WWF	WELDED WIRE FABRIC
XFMR	TRANSFORMER

GENERAL NOTES:

1. NOT ALL SYMBOLS DEPICTED ON THIS DRAWING ARE USED IN THE ARCHITECTURAL DRAWINGS.
2. VERIFY ALL DIMENSIONS IN THE FIELD.
3. VERIFY ALL FIELD CONDITIONS.
4. ALL MASONRY DIMENSIONS ARE NOMINAL UNLESS NOTED OTHERWISE.
5. ALL WORK WILL BE COMPLETED IN ACCORDANCE WITH THE LATEST VERSIONS OF I.B.C. AND LIFE SAFETY CODES.
6. DO NOT SCALE DRAWINGS FOR PURPOSES OF CONSTRUCTION.
7. ANY DEVIATION FROM, OR IN FIELD ALTERATION TO THESE DRAWINGS, AND SPECIFICATIONS IS STRICTLY PROHIBITED WITHOUT PRIOR APPROVAL OF C.O.R. ANY SUCH ALTERATIONS SHALL BE CORRECTED AT ONCE, WITH NO EXPENSE TO THE OWNER.
8. THE CONTRACTOR SHALL BE RESPONSIBLE FOR COORDINATING THE WORK OF ALL TRADES REGARDLESS OF DISCREPENCIES IN THE CONTRACT DOCUMENTS. NO ADDITIONAL COSTS WILL BE PAID BY THE OWNER TO RECTIFY WORK TO BE RELOCATED DUE TO LACK OF JOBSITE COORDINATION.
9. DEMOLITION, CUTTING, AND PATCHING OF ANYTHING REQUIRED TO CONSTRUCT THE PROJECT IS HEREIN MADE A PART OF THESE DOCUMENTS.
10. THE CONTRACTOR SHALL SECURE AND PAY FOR ALL PERMITS.
11. ASBESTOS CONTAINING MATERIALS (ACM). LEAD CONTAINING PAINT (LCP), POLYCHLORINATED BIPHENYLS (PCBs) AND MERCURY CONTAINING EQUIPMENT HAVE BEEN IDENTIFIED IN VAULTS 155, 1710, AND/OR 1932. THE CONTRACTOR SHALL BE RESPONSIBLE FOR ABATEMENT OF THESE MATERIALS IN ACCORDANCE WITH FEDERAL, STATE AND LOCAL RULES AND REGULATIONS.
12. ELECTRICAL AND MECHANICAL SYSTEMS HISTORICALLY CONTAIN COMPONENTS THAT MAY CONTAIN ACM, LCP, PCB's AND MERCURY. THE CONTRACTOR SHALL BE RESPONSIBLE FOR CONFIRMING OR NEGATING THE PRESENCES ACM, LCP, PCB AND MERCURY AND ABATEMENT.
13. THE CONTRACTOR SHALL BE RESPONSIBLE FOR REVIEWING THE "HAZARDOUS MATERIALS ASSESSMENT FINDINGS REPORT, GANNETT FLEMING, JUNE 12, 2015.

SYM	DESCRIPTION	DATE	APPR

NAVFAC

ARCHITECTURAL REGISTRATION BOARD 5231-A STATE OF MARYLAND

Professional Certification
I HEREBY CERTIFY THAT THESE DOCUMENTS WERE PREPARED OR APPROVED BY ME, AND THAT I AM A DULY LICENSED PROFESSIONAL ARCHITECT UNDER THE LAWS OF THE STATE OF MARYLAND, LICENSE NO. 5231-A, EXPIRATION DATE: 05/16/17. SEAL

JOHNSON, MIRMIRAN & THOMPSON
Gannett Fleming
A Joint Venture
272 Bendix Road, Suite 260
Virginia Beach, Virginia, 23452
Telephone: (757) 499-1895
Web: www.jmt.com

A/E INFO

APPROVED

FOR COMMANDER NAVFAC

ACTIVITY

JAMES FLETCHER PER CHECKLIST
SATISFACTORY TO DATE 9/27/2016

DES DRE | DRW DRE | CHK JRS

PM/DM RH

BRANCH MANAGER

CHIEF ENG/ARCH E. GALLAHER, PE

DEPARTMENT OF THE NAVY
NAVAL FACILITIES ENGINEERING COMMAND
NAVFAC WASHINGTON
WASHINGTON, D.C.
NAVAL AIR STATION PATUXENT RIVER
PATUXENT RIVER, MARYLAND
FY16 SPECIAL PROJECT RM12-2137
REPAIR RUNWAYS 14-32 & 6-24 - PHASE 2
ARCHITECTURAL LEGEND, ABBREVIATIONS, AND NOTES

IPT BLUE

SCALE: NONE
EPROJECT NO.: 1382137
CONSTR. CONTR. NO. N40080-17-R-0002
NAVFAC DRAWING NO. 13079937
SHEET 79 OF 191

A-001

DRAWFORM REVISION: 10 MARCH 2009

FILE NAME: H:\59487 Pax River\Architectural\Planset\10-0863-009-A-001.dwg LAYOUT NAME: A-001 PLOTTED: Monday, September 26, 2016 - 1:28pm USER: devans

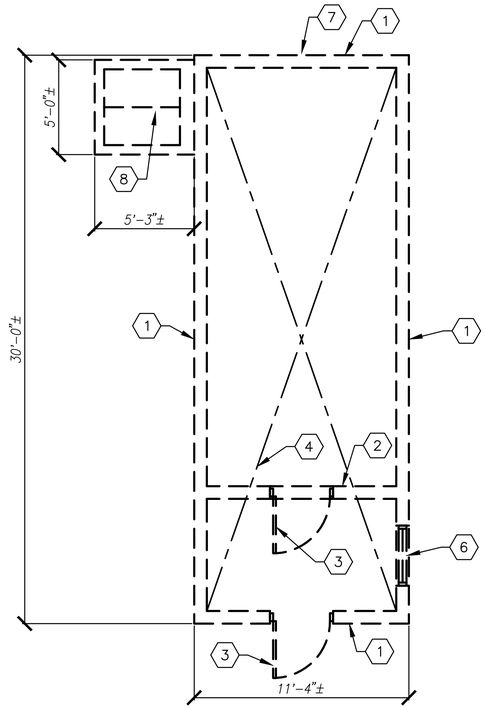

VAULT 155 DEMOLITION FLOOR PLAN (1)

SCALE: 1/4"=1'-0" AD401

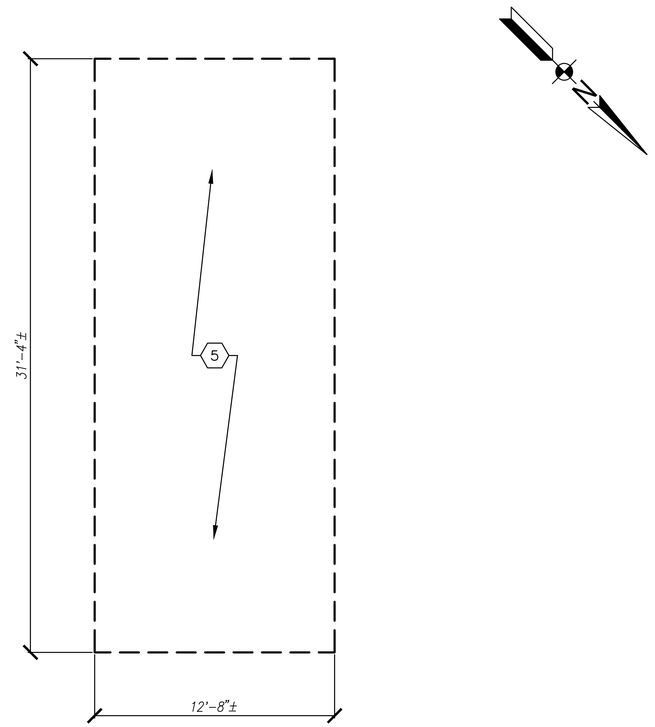

VAULT 155 DEMOLITION ROOF PLAN (2)

SCALE: 1/4"=1'-0" AD401

GENERAL DEMOLITION NOTES:

1. PRIOR TO DEMOLITION, VERIFY EXISTING CONDITIONS.
2. PRIOR TO DEMOLITION, VERIFY MATERIALS AND EQUIPMENT TO BE SALVAGED.
3. REMOVE ALL RUBBISH AND DEMOLITION DEBRIS FROM THE SITE AND DISPOSE OF IN A LAWFUL MANNER.
4. COORDINATE GENERAL CONSTRUCTION DEMOLITION WITH THE MECHANICAL AND ELECTRICAL DEMOLITION WORK.
5. PROVIDE TEMPORARY LINTELS OR STRUCTURAL SUPPORT FOR OPENINGS CREATED BY THE DEMOLITION WORK AND MAINTAIN SUCH SUPPORTS UNTIL PERMANENT STRUCTURAL SUPPORTS ARE INSTALLED.
6. PROVIDE TEMPORARY STRUCTURAL SUPPORT FOR FLOORS, WALLS, AND ROOFS AS REQUIRED DURING DEMOLITION WORK AND MAINTAIN SUCH SUPPORTS UNTIL PERMANENT STRUCTURAL SUPPORTS ARE INSTALLED.
7. REPAIR ALL EXISTING STRUCTURES, UTILITIES, AND EQUIPMENT, SCHEDULED TO REMAIN, WHICH ARE DAMAGED DURING DEMOLITION OPERATIONS.
8. ALL WORK SCHEDULED TO BE DEMOLISHED, WILL BE REMOVED COMPLETLY INCLUDING ALL FASTENERS, ATTACHMENTS, ACCESSORIES, OR ANY RELATED WORK.
9. DEMOLITION INCLUDES ALL ITEMS WHETHER OR NOT SHOWN ON THE DRAWINGS, THAT ARE REQUIRED TO BE REMOVED IN ORDER TO INSTALL THE NEW WORK SHOWN ON DRAWINGS AND OTHER PORTIONS OF THE CONTRACT DOCUMENTS.
10. ANY DEMOLITION SHOWN AS DASHED LINES WILL BE REMOVED WHETHER OR NOT SPECIFIC NOMENCLATURE IS CORRECT OR NOT SHOWN ON DRAWINGS.
11. VAULT 155 SHALL NOT BE DEMOLISHED UNTIL THE NEW VAULT 155 HAS BEEN COMPLETELY PLACED INTO SERVICE.

DEMOLITION KEYNOTES:

(1) DEMOLISH COMPLETE CONCRETE WALL ASSEMBLY AND ACCESSORIES INCLUDING FOUNDATION WALL AND FOOTING.

(2) DEMOLISH CONCRETE PARTITION.

(3) DEMOLISH WOOD DOOR AND FRAME, INCLUDING ANY ANCHORS,FASTENERS, ATTACHMENTS AND RELATED ACCESSORIES.

(4) DEMOLISH CONCRETE SLAB ON GRADE. DEMOLISH ALL CONDUITS AND OTHER UTILITIES BELOW SLAB ON GRADE.

(5) DEMOLISH ROOFING SYSTEM AND ACCESSORIES INCLUDING BUT NOT LIMITED TO THE CONCRETE ROOF SLAB, BUILT-UP ROOFING & GRAVEL, FASCIA, AND WOOD BLOCKING.

(6) DEMOLISH EXISTING WINDOW 3'W x 4'H

(7) DEMOLISH EXISTING WINDOW 2'W x 6"H

(8) DEMOLISH METAL ACCESS DOORS AND CONCRETE VAULT

KEY MAP

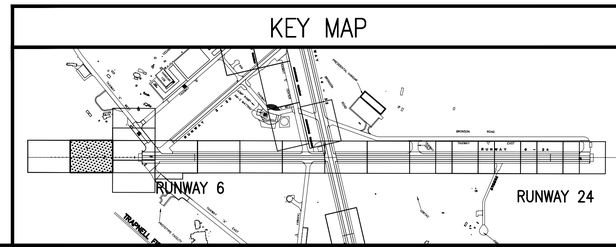

GRAPHIC SCALE

1/4"=1'-0"

1' 0 2' 4' 8'

SYM	DESCRIPTION	DATE	APPR

NAVFAC

ARCHITECTURAL REGISTRATION BOARD 5231-A STATE OF MARYLAND

Professional Certification
I HEREBY CERTIFY THAT THESE DOCUMENTS WERE PREPARED OR APPROVED BY ME, AND THAT I AM A DULY LICENSED PROFESSIONAL ARCHITECT UNDER THE LAWS OF THE STATE OF MARYLAND, LICENSE NO. 5231-A, EXPIRATION DATE: 05/18/17. SEAL

JOHNSON, MIRMIRAN & THOMPSON
Gannett Fleming
A Joint Venture
272 Bendix Road, Suite 260
Virginia Beach, Virginia, 23452
Telephone: (757) 499-1895
Web: www.jmt.com

A/E INFO

APPROVED

FOR COMMANDER NAVFAC

ACTIVITY

JAMES FLETCHER PER CHECKLIST
SATISFACTORY TO DATE 9/27/2016

DES DRE DRW DRE CHK JRS
PM/DM RH
BRANCH MANAGER
CHIEF ENG/ARCH E. GALLAHER, PE

DEPARTMENT OF THE NAVY
NAVAL FACILITIES ENGINEERING COMMAND
NAVFAC WASHINGTON
WASHINGTON, D.C.
IPT BLUE
NAVAL AIR STATION PATUXENT RIVER
PATUXENT RIVER, MARYLAND
FY16 SPECIAL PROJECT RM12-2137
REPAIR RUNWAYS 14-32 & 6-24 - PHASE 2
VAULT 155 - DEMOLITION

SCALE: 1/4" = 1'-0"
EPROJECT NO. 1382137
CONSTR. CONTR. NO. N40080-17-R-0002
NAVFAC DRAWING NO. 13079938
SHEET 80 OF 191

AD401

DRAWFORM REVISION: 10 MARCH 2009

FILE NAME: H:\59487 Pax River\Architectural\Planset\10-0863-009-AD-401.dwg LAYOUT NAME: AD-401 PLOTTED: Monday, September 26, 2016 - 1:33pm USER: devons

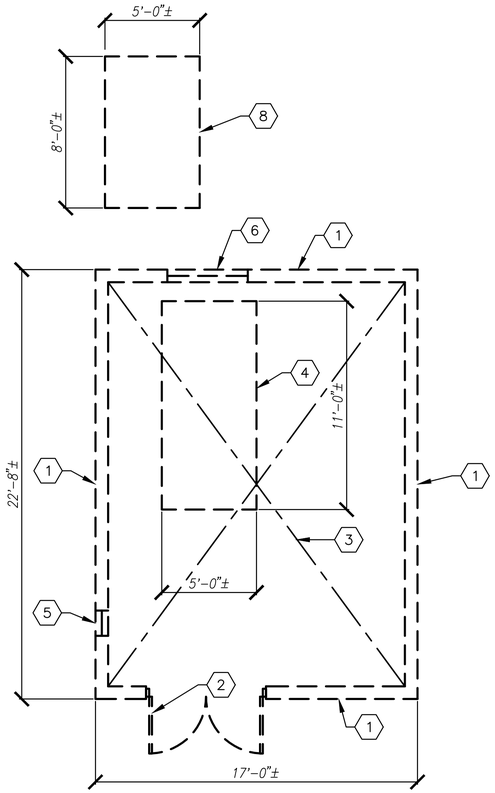

VAULT 1932 DEMOLITION FLOOR PLAN (1)

SCALE: 1/4"=1'-0" AD402

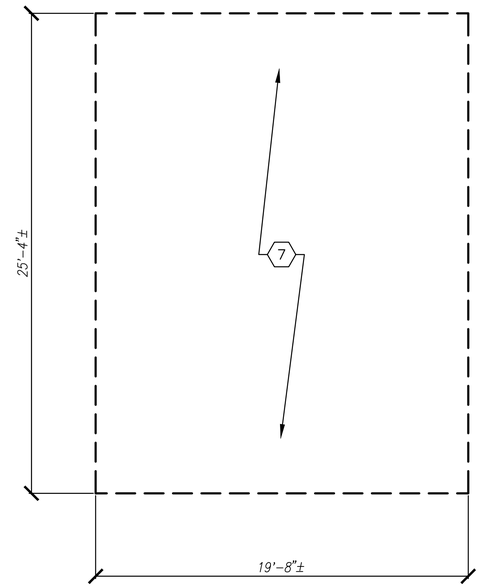

VAULT 1932 DEMOLITION ROOF PLAN (2)

SCALE: 1/4"=1'-0" AD402

GENERAL DEMOLITION NOTES:

1. PRIOR TO DEMOLITION, VERIFY EXISTING CONDITIONS.
2. PRIOR TO DEMOLITION, VERIFY MATERIALS AND EQUIPMENT TO BE SALVAGED.
3. REMOVE ALL RUBBISH AND DEMOLITION DEBRIS FROM THE SITE AND DISPOSE OF IN A LAWFUL MANNER.
4. COORDINATE GENERAL CONSTRUCTION DEMOLITION WITH THE MECHANICAL AND ELECTRICAL DEMOLITION WORK.
5. PROVIDE TEMPORARY LINTELS OR STRUCTURAL SUPPORT FOR OPENINGS CREATED BY THE DEMOLITION WORK AND MAINTAIN SUCH SUPPORTS UNTIL PERMANENT STRUCTURAL SUPPORTS ARE INSTALLED.
6. PROVIDE TEMPORARY STRUCTURAL SUPPORT FOR FLOORS, WALLS, AND ROOFS AS REQUIRED DURING DEMOLITION WORK AND MAINTAIN SUCH SUPPORTS UNTIL PERMANENT STRUCTURAL SUPPORTS ARE INSTALLED.
7. REPAIR ALL EXISTING STRUCTURES, UTILITIES, AND EQUIPMENT, SCHEDULED TO REMAIN, WHICH ARE DAMAGED DURING DEMOLITION OPERATIONS.
8. ALL WORK SCHEDULED TO BE DEMOLISHED, WILL BE REMOVED COMPLETLY INCLUDING ALL FASTENERS, ATTACHMENTS, ACCESSORIES, OR ANY RELATED WORK.
9. DEMOLITION INCLUDES ALL ITEMS WHETHER OR NOT SHOWN ON THE DRAWINGS, THAT ARE REQUIRED TO BE REMOVED IN ORDER TO INSTALL THE NEW WORK SHOWN ON DRAWINGS AND OTHER PORTIONS OF THE CONTRACT DOCUMENTS.
10. ANY DEMOLITION SHOWN AS DASHED LINES WILL BE REMOVED WHETHER OR NOT SPECIFIC NOMENCLATURE IS CORRECT OR NOT SHOWN ON DRAWINGS.
11. VAULT 1932 SHALL NOT BE DEMOLISHED UNTIL THE NEW VAULT 155 HAS BEEN COMPLETELY PLACED INTO SERVICE.

DEMOLITION KEYNOTES:

1. DEMOLISH COMPLETE CMU WALL ASSEMBLY AND ACCESSORIES INCLUDING FOUNDATION WALL AND FOOTING.
2. DEMOLISH HOLLOW METAL DOUBLE DOOR AND FRAME, INCLUDING ANY ANCHORS, FASTENERS, ATTACHMENTS AND RELATED ACCESSORIES.
3. DEMOLISH CONCRETE SLAB ON GRADE. DEMOLISH ALL CONDUITS AND OTHER UTILITIES BELOW SLAB ON GRADE.
4. DEMOLISH 4"H CONCRETE EQUIPMENT PAD
5. DEMOLISH (2) EXISTING LOUVERS 16"W x 8"H
6. DEMOLISH EXISTING LOUVER 51"W x 63"H
7. DEMOLISH CONCRETE TEE ROOFING SYSTEM AND ACCESSORIES.
8. DEMOLISH FUEL TANK CONCRETE PAD

KEY MAP

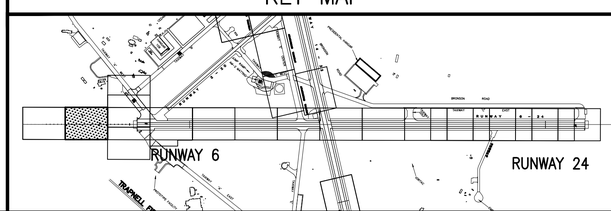

GRAPHIC SCALE

1/4"=1'-0"

1' 0 2' 4' 8'

SYM	DESCRIPTION	DATE	APPR

Professional Certification
I HEREBY CERTIFY THAT THESE DOCUMENTS WERE PREPARED OR APPROVED BY ME, AND THAT I AM A DULY LICENSED PROFESSIONAL ARCHITECT UNDER THE LAWS OF THE STATE OF MARYLAND, LICENSE NO. 5231-A, EXPIRATION DATE: 05/18/17.
SEAL

JOHNSON, MIRMIRAN & THOMPSON
Gannett Fleming
A Joint Venture
272 Bendix Road, Suite 260
Virginia Beach, Virginia, 23452
Telephone: (757) 499-1895
Web: www.jmt.com
A/E INFO

APPROVED
FOR COMMANDER NAVFAC
ACTIVITY
JAMES FLETCHER PER CHECKLIST
SATISFACTORY TO DATE 9/27/2016
DES DRE DRW DRE CHK JRS
PM/DM RH
BRANCH MANAGER
CHIEF ENG/ARCH E. GALLAHER, PE

DEPARTMENT OF THE NAVY
NAVAL FACILITIES ENGINEERING COMMAND
NAVFAC WASHINGTON
WASHINGTON, D.C.
IPT BLUE
NAVAL AIR STATION PATUXENT RIVER
PATUXENT RIVER, MARYLAND
FY16 SPECIAL PROJECT RM12-2137
REPAIR RUNWAYS 14-32 & 6-24 - PHASE 2
VAULT 1932 – DEMOLITION

SCALE: 1/4" = 1'-0"
EPROJECT NO.: 1382137
CONSTR. CONTR. NO. N40080-17-R-0002
NAVFAC DRAWING NO. 13079939
SHEET 81 OF 191
AD402

DRAWFORM REVISION: 10 MARCH 2009

FILE NAME: H:\59487 Pax River\Architectural\Planset\10-0863-009-AD-402.dwg LAYOUT NAME: AD-402 PLOTTED: Monday, September 26, 2016 - 1:34pm USER: devans

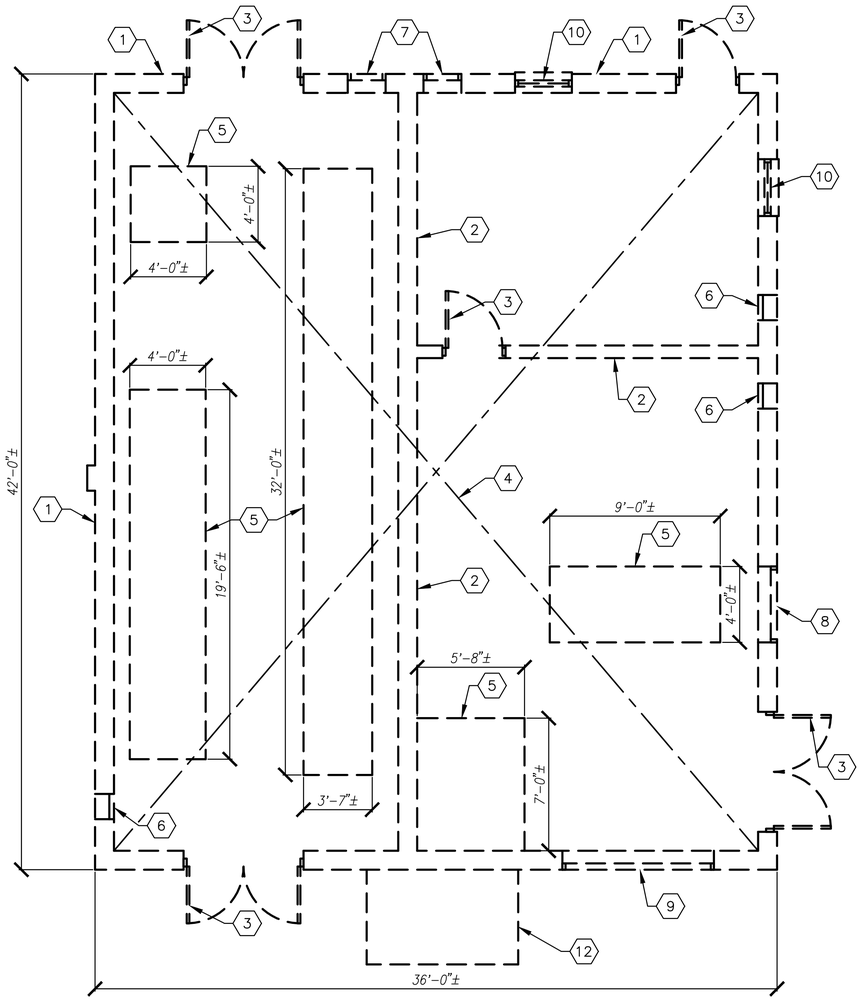

VAULT 1710 DEMOLITION FLOOR PLAN (1)

SCALE: 1/4"=1'-0" AD403

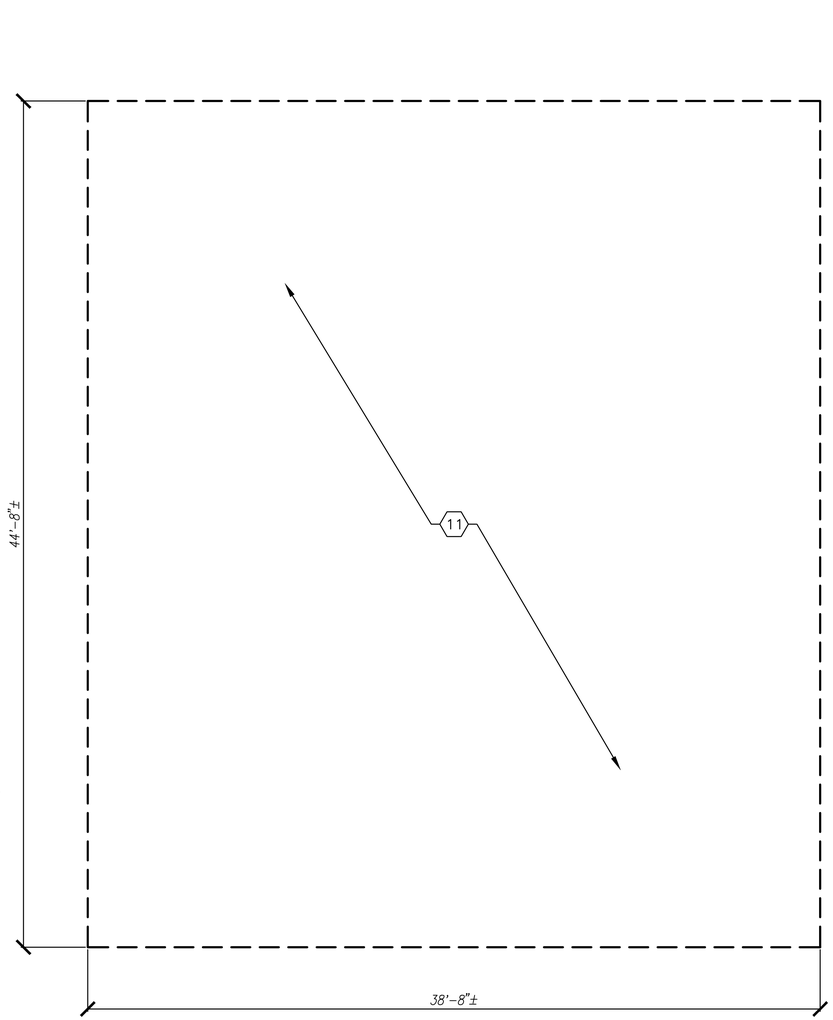

VAULT 1710 DEMOLITION ROOF PLAN (2)

SCALE: 1/4"=1'-0" AD403

GENERAL DEMOLITION NOTES:

1. PRIOR TO DEMOLITION, VERIFY EXISTING CONDITIONS.
2. PRIOR TO DEMOLITION, VERIFY MATERIALS AND EQUIPMENT TO BE SALVAGED.
3. REMOVE ALL RUBBISH AND DEMOLITION DEBRIS FROM THE SITE AND DISPOSE OF IN A LAWFUL MANNER.
4. COORDINATE GENERAL CONSTRUCTION DEMOLITION WITH THE MECHANICAL AND ELECTRICAL DEMOLITION WORK.
5. PROVIDE TEMPORARY LINTELS OR STRUCTURAL SUPPORT FOR OPENINGS CREATED BY THE DEMOLITION WORK AND MAINTAIN SUCH SUPPORTS UNTIL PERMANENT STRUCTURAL SUPPORTS ARE INSTALLED.
6. PROVIDE TEMPORARY STRUCTURAL SUPPORT FOR FLOORS, WALLS, AND ROOFS AS REQUIRED DURING DEMOLITION WORK AND MAINTAIN SUCH SUPPORTS UNTIL PERMANENT STRUCTURAL SUPPORTS ARE INSTALLED.
7. REPAIR ALL EXISTING STRUCTURES, UTILITIES, AND EQUIPMENT, SCHEDULED TO REMAIN, WHICH ARE DAMAGED DURING DEMOLITION OPERATIONS.
8. ALL WORK SCHEDULED TO BE DEMOLISHED, WILL BE REMOVED COMPLETLY INCLUDING ALL FASTENERS, ATTACHMENTS, ACCESSORIES, OR ANY RELATED WORK.
9. DEMOLITION INCLUDES ALL ITEMS WHETHER OR NOT SHOWN ON THE DRAWINGS, THAT ARE REQUIRED TO BE REMOVED IN ORDER TO INSTALL THE NEW WORK SHOWN ON DRAWINGS AND OTHER PORTIONS OF THE CONTRACT DOCUMENTS.
10. ANY DEMOLITION SHOWN AS DASHED LINES WILL BE REMOVED WHETHER OR NOT SPECIFIC NOMENCLATURE IS CORRECT OR NOT SHOWN ON DRAWINGS.
11. VAULT 1710 SHALL NOT BE DEMOLISHED UNTIL THE NEW VAULT 1710 HAS BEEN COMPLETELY PLACED INTO SERVICE.

DEMOLITION KEYNOTES:

1. DEMOLISH COMPLETE CMU WALL ASSEMBLY AND ACCESSORIES INCLUDING FOUNDATION WALL AND FOOTING.
2. DEMOLISH CMU PARTITION.
3. DEMOLISH HOLLOW METAL DOOR AND FRAME, INCLUDING ANY ANCHORS, FASTENERS, ATTACHMENTS AND RELATED ACCESSORIES.
4. DEMOLISH CONCRETE SLAB ON GRADE. DEMOLISH ALL CONDUITS AND OTHER UTILITIES BELOW SLAB ON GRADE.
5. DEMOLISH 4"H CONCRETE EQUIPMENT PAD
6. DEMOLISH EXISTING LOUVER 16"W x 16"H
7. DEMOLISH EXISTING LOUVER 24"W x 48"H
8. DEMOLISH EXISTING LOUVER 48"W x 84"H
9. DEMOLISH EXISTING LOUVER 96"W x 80"H
10. DEMOLISH EXISTING WINDOW 3'W x 4'H
11. DEMOLISH ROOFING SYSTEM AND ACCESSORIES INCLUDING BUT NOT LIMITED TO THE CONCRETE ROOF, BUILT-UP ROOFING & GRAVEL, FASCIA, AND WOOD BLOCKING.
12. DEMOLISH FUEL TANK CONCRETE PAD

KEY MAP

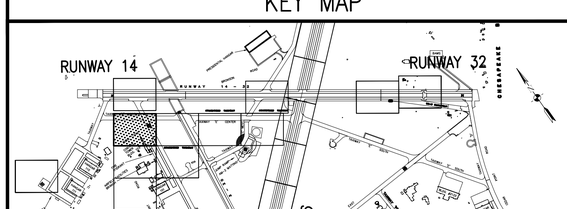

GRAPHIC SCALE

1/4"=1'-0"

1' 0 2' 4' 8'

SYM	DESCRIPTION	DATE	APPR

NAVFAC

ARCHITECTURAL REGISTRATION BOARD 5231-A STATE OF MARYLAND

Professional Certification
I HEREBY CERTIFY THAT THESE DOCUMENTS WERE PREPARED OR APPROVED BY ME, AND THAT I AM A DULY LICENSED PROFESSIONAL ARCHITECT UNDER THE LAWS OF THE STATE OF MARYLAND, LICENSE NO. 5231-A, EXPIRATION DATE: 05/18/17. SEAL

JOHNSON, MIRMIRAN & THOMPSON
Gannett Fleming
A Joint Venture
272 Bendix Road, Suite 260
Virginia Beach, Virginia, 23452
Telephone: (757) 499-1895
Web: www.jmt.com

A/E INFO

APPROVED

FOR COMMANDER NAVFAC

ACTIVITY

JAMES FLETCHER PER CHECKLIST
SATISFACTORY TO DATE 9/27/2016

DES DRE DRW DRE CHK JRS
PM/DM RH
BRANCH MANAGER
CHIEF ENG/ARCH E. GALLAHER, PE

DEPARTMENT OF THE NAVY
NAVAL FACILITIES ENGINEERING COMMAND
NAVFAC WASHINGTON
WASHINGTON, D.C.
IPT BLUE
NAVAL AIR STATION PATUXENT RIVER
PATUXENT RIVER, MARYLAND
FY16 SPECIAL PROJECT RM12-2137
REPAIR RUNWAYS 14-32 & 6-24 - PHASE 2
VAULT 1710 - DEMOLITION

SCALE: 1/4" = 1'-0"
EPROJECT NO.: 1382137
CONSTR. CONTR. NO. N40080-17-R-0002
NAVFAC DRAWING NO. 13079940
SHEET 82 OF 191
AD403

DRAWFORM REVISION: 10 MARCH 2009

FILE NAME: H:\59487 Pax River\Architectural\Planset\10-0863-009-AD-403.dwg LAYOUT NAME: AD-403 PLOTTED: Monday, September 26, 2016 - 1:36pm USER: devans

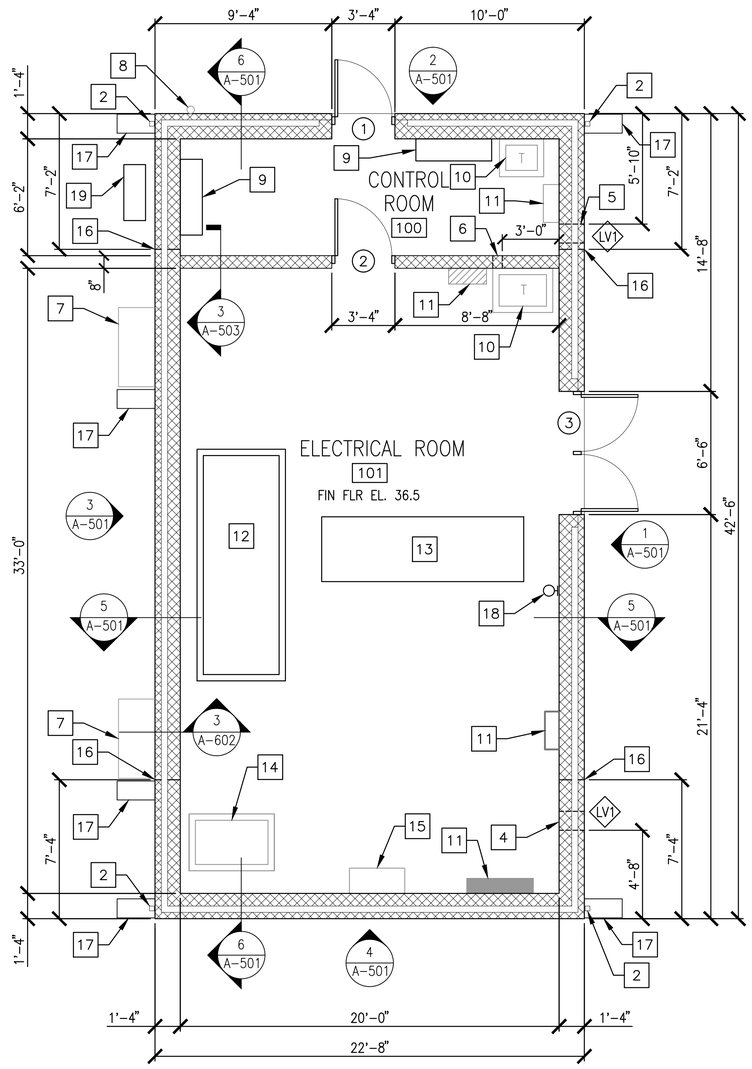

VAULT 155 FLOOR PLAN (1)

SCALE: 1/4" = 1'-0" A-401

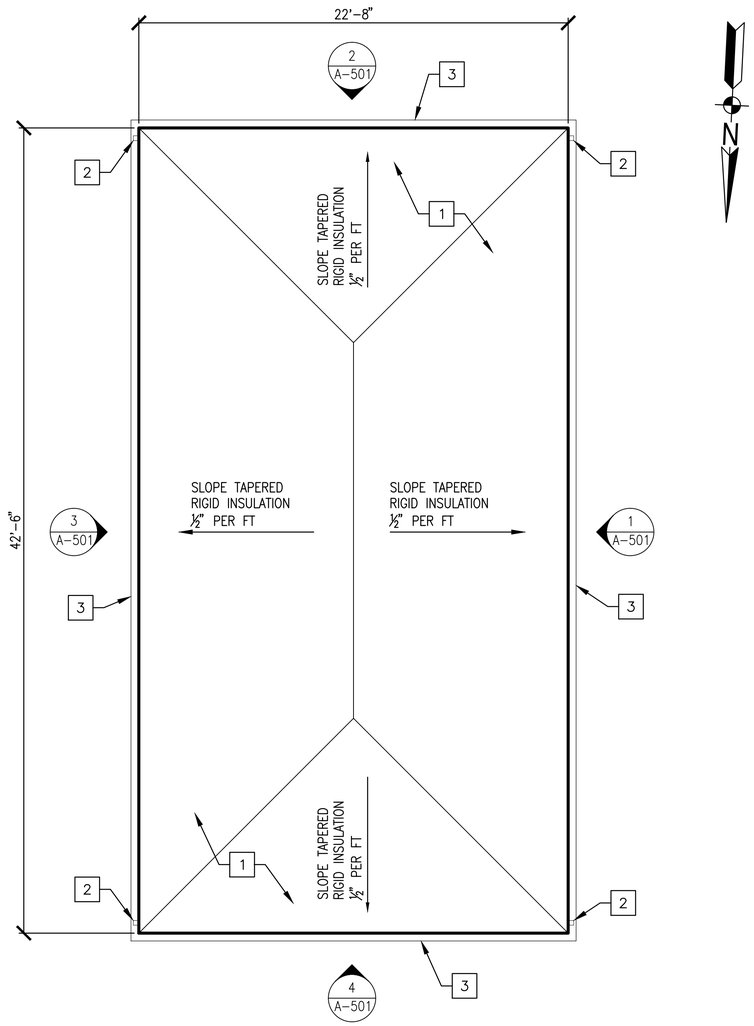

VAULT 155 ROOF PLAN (2)

SCALE: 1/4" = 1'-0" A-401

GENERAL SHEET NOTES:

1. COORDINATE SIZE AND LOCATION OF EQUIPMENT WITH MECHANICAL AND ELECTRICAL DRAWINGS.

CONSTRUCTION KEYNOTES:

1. MEMBRANE ROOFING SYSTEM OVER TAPERED INSULATION.
2. PREFINISHED METAL DOWNSPOUT.
3. PREFINISHED METAL GUTTER.
4. INTAKE LOUVER. SEE ELEVATION DRAWING A-501 AND MECHANICAL DRAWINGS.
5. EXHAUST LOUVER. SEE ELEVATION DRAWING A-501 AND MECHANICAL DRAWINGS.
6. 6x6 GRILLE W/ BOTTOM AT 8'-10" AFF. SEE MECHANICAL DRAWINGS FOR DETAILS.
7. CONCRETE EQUIPMENT PAD. SEE ELEVATIONS DRAWING A-501 AND STRUCTURAL DRAWINGS FOR DETAILS.
8. ANTENNA. SEE ELECTRICAL DRAWINGS.
9. CABINET. SEE ELECTRICAL DRAWINGS.
10. TRANSFORMER. SEE ELECTRICAL DRAWINGS.
11. ELECTRICAL PANEL. SEE ELECTRICAL DRAWINGS.
12. SWITCHGEAR. SEE ELECTRICAL DRAWINGS.
13. PORTABLE FORKLIFT
14. TRANSFER SWITCH. SEE ELECTRICAL DRAWINGS.
15. DISCONNECT SAFETY SWITCH. SEE ELECTRICAL DRAWINGS.
16. CONTROL JOINT.
17. PRECAST CONCRETE SPLASH BLOCK.
18. BRACKET MOUNTED FIRE EXTINGUISHER.
19. WALL-MOUNTED CONDENSING UNIT. SEE MECHANICAL DRAWINGS.

KEY MAP

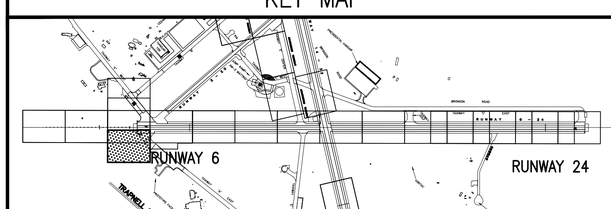

GRAPHIC SCALE

1/4"=1'-0"

1' 0 2' 4' 8'

SYM	DESCRIPTION	DATE	APPR

NAVFAC

ARCHITECTURAL REGISTRATION BOARD 5231-A STATE OF MARYLAND

Professional Certification

I HEREBY CERTIFY THAT THESE DOCUMENTS WERE PREPARED OR APPROVED BY ME, AND THAT I AM A DULY LICENSED PROFESSIONAL ARCHITECT UNDER THE LAWS OF THE STATE OF MARYLAND, LICENSE NO. 5231-A, EXPIRATION DATE: 05/16/17. SEAL

JOHNSON, MIRMIRAN & THOMPSON
Gannett Fleming
A Joint Venture
272 Bendix Road, Suite 260
Virginia Beach, Virginia, 23452
Telephone: (757) 499-1895
Web: www.jmt.com

A/E INFO

APPROVED

FOR COMMANDER NAVFAC

ACTIVITY

JAMES FLETCHER PER CHECKLIST
SATISFACTORY TO DATE 9/27/2016

DES DRE DRW DRE CHK JRS

PM/DM RH

BRANCH MANAGER

CHIEF ENG/ARCH E. GALLAHER, PE

DEPARTMENT OF THE NAVY
NAVAL FACILITIES ENGINEERING COMMAND
WASHINGTON, D.C.
NAVFAC WASHINGTON
PT. BLUE
NAVAL AIR STATION PATUXENT RIVER
PATUXENT RIVER, MARYLAND
FY16 SPECIAL PROJECT RM12-2137
REPAIR RUNWAYS 14-32 & 6-24 - PHASE 2
VAULT 155 - FLOOR & ROOF PLANS

SCALE: 1/4" = 1'-0"
EPROJECT NO.: 1382137
CONSTR. CONTR. NO.: N40080-17-R-0002
NAVFAC DRAWING NO.: 13079941
SHEET 83 OF 191

A-401

DRAWFORM REVISION: 10 MARCH 2009

FILE NAME: H:\59487 Pax River\Architectural\Planset\10-0863-009-A-401.dwg LAYOUT NAME: A-401 PLOTTED: Monday, September 26, 2016 - 1:37pm USER: devans

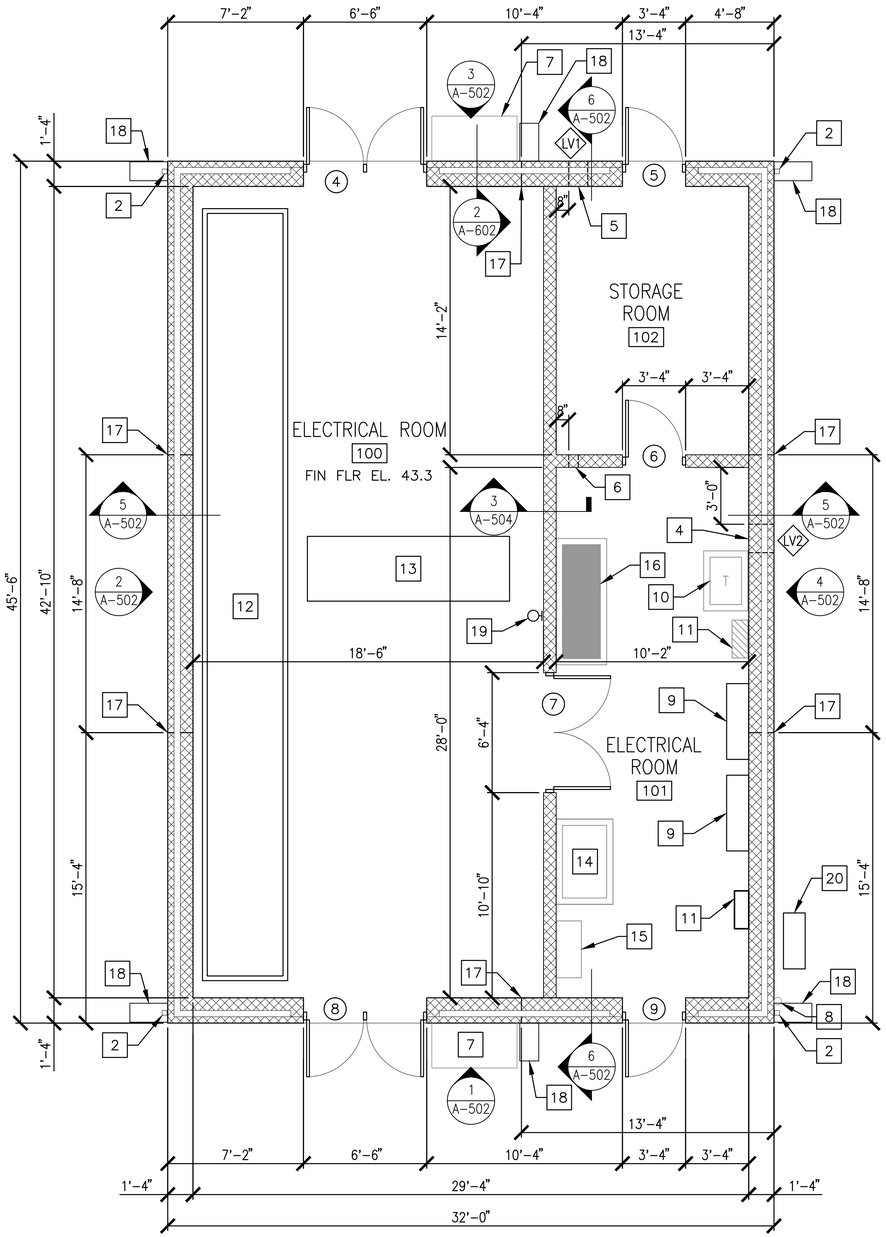

VAULT 1710 FLOOR PLAN (1)

SCALE: 1/4" = 1'-0" A-402

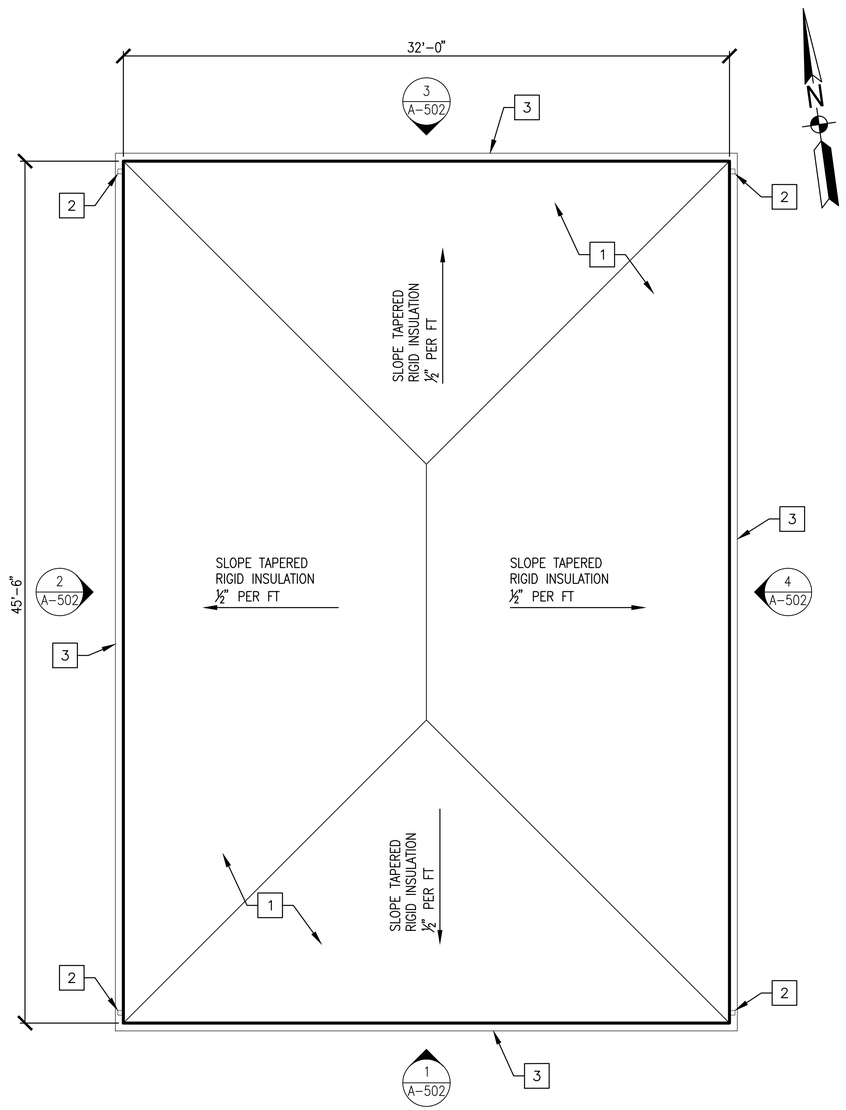

VAULT 1710 ROOF PLAN (2)

SCALE: 1/4" = 1'-0" A-402

GENERAL SHEET NOTES:

1. COORDINATE SIZE AND LOCATION OF EQUIPMENT WITH MECHANICAL AND ELECTRICAL DRAWINGS.

CONSTRUCTION KEYNOTES:

1. MEMBRANE ROOFING SYSTEM OVER TAPERED INSULATION.
2. PREFINISHED METAL DOWNSPOUT.
3. PREFINISHED METAL GUTTER.
4. INTAKE LOUVER. SEE ELEVATION DRAWING A-503 AND MECHANICAL DRAWINGS.
5. EXHAUST LOUVER. SEE ELEVATION DRAWING A-503 AND MECHANICAL DRAWINGS.
6. 6x6 GRILLE W/ BOTTOM AT 8'-10" AFF. SEE MECHANICAL DRAWINGS FOR DETAILS.
7. CONCRETE EQUIPMENT PAD. SEE ELEVATIONS DRAWING A-503 AND STRUCTURAL DRAWINGS FOR DETAILS.
8. ANTENNA. SEE ELECTRICAL DRAWINGS.
9. CABINET. SEE ELECTRICAL DRAWINGS.
10. TRANSFORMER. SEE ELECTRICAL DRAWINGS.
11. ELECTRICAL PANEL. SEE ELECTRICAL DRAWINGS.
12. SWITCHGEAR. SEE ELECTRICAL DRAWINGS.
13. PORTABLE FORKLIFT
14. TRANSFER SWITCH. SEE ELECTRICAL DRAWINGS.
15. DISCONNECT SAFETY SWITCH. SEE ELECTRICAL DRAWINGS.
16. SWITCHBOARD. SEE ELECTRICAL DRAWINGS.
17. CONTROL JOINT.
18. PRECAST CONCRETE SPLASH BLOCK.
19. BRACKET MOUNTED FIRE EXTINGUISHER.
20. WALL-MOUNTED CONDENSING UNIT. SEE MECHANICAL DRAWINGS.

KEY MAP

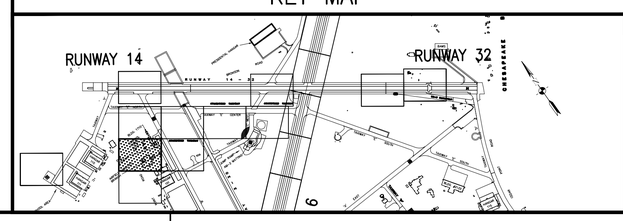

GRAPHIC SCALE

1/4"=1'-0"

1' 0 2' 4' 8'

SYM	DESCRIPTION	DATE	APPR

NAVFAC

Professional Certification
I HEREBY CERTIFY THAT THESE DOCUMENTS WERE PREPARED OR APPROVED BY ME, AND THAT I AM A DULY LICENSED PROFESSIONAL ARCHITECT UNDER THE LAWS OF THE STATE OF MARYLAND, LICENSE NO. 5231-A, EXPIRATION DATE: 05/16/17.
SEAL

JOHNSON, MIRMIRAN & THOMPSON
Gannett Fleming
A Joint Venture
272 Bendix Road, Suite 260
Virginia Beach, Virginia, 23452
Telephone: (757) 499-1895
Web: www.jmt.com
A/E INFO

APPROVED
FOR COMMANDER NAVFAC
ACTIVITY
JAMES FLETCHER PER CHECKLIST
SATISFACTORY TO DATE 9/27/2016
DES DRE DRW DRE CHK JRS
PM/DM RH
BRANCH MANAGER
CHIEF ENG/ARCH E. GALLAHER, PE

DEPARTMENT OF THE NAVY
NAVAL FACILITIES ENGINEERING COMMAND
NAVFAC WASHINGTON
WASHINGTON, D.C.
IPT BLUE
NAVAL AIR STATION PATUXENT RIVER
PATUXENT RIVER, MARYLAND
FY16 SPECIAL PROJECT RM12-2137
REPAIR RUNWAYS 14-32 & 6-24 - PHASE 2
VAULT 1710 - FLOOR & ROOF PLANS

SCALE: 1/4" = 1'-0"
EPROJECT NO.: 1382137
CONSTR. CONTR. NO. N40080-17-R-0002
NAVFAC DRAWING NO. 13079942
SHEET 84 OF 191
A-402

DRAWFORM REVISION: 10 MARCH 2009

FILE NAME: H:\59487 Fox River\Architectural\Planset\10-0863-009-A-402.dwg LAYOUT NAME: A-402 PLOTTED: Monday, September 26, 2016 - 1:44pm USER: devons

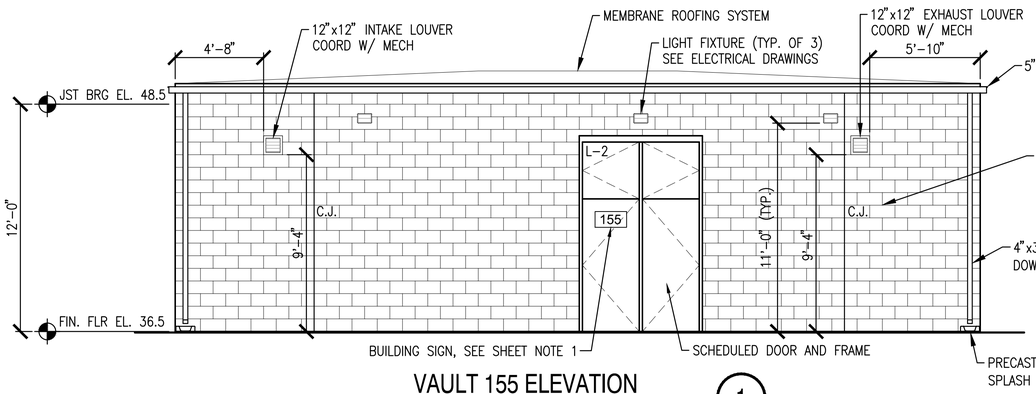

VAULT 155 ELEVATION 1

SCALE: 1/4" = 1'-0" A-401

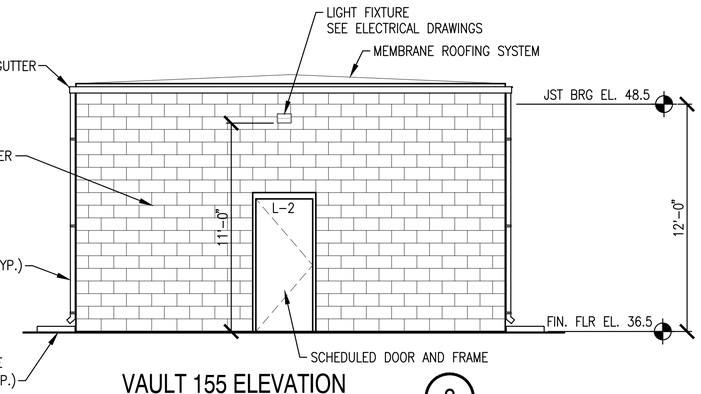

VAULT 155 ELEVATION 2

SCALE: 1/4" = 1'-0" A-401

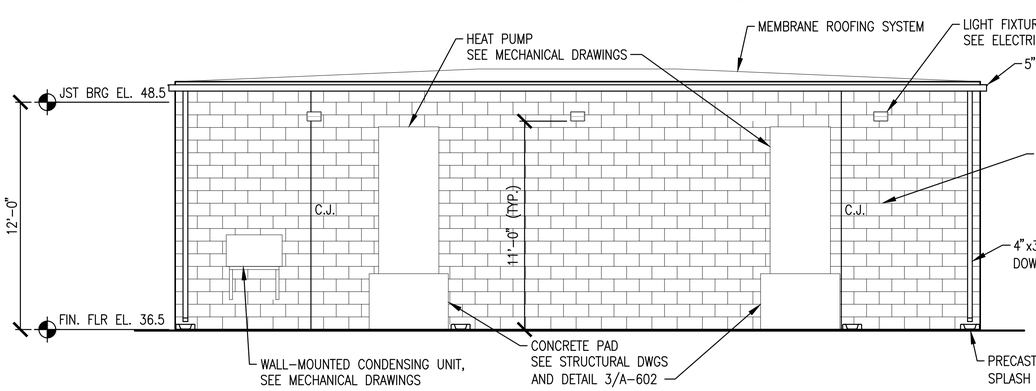

VAULT 155 ELEVATION 3

SCALE: 1/4" = 1'-0" A-401

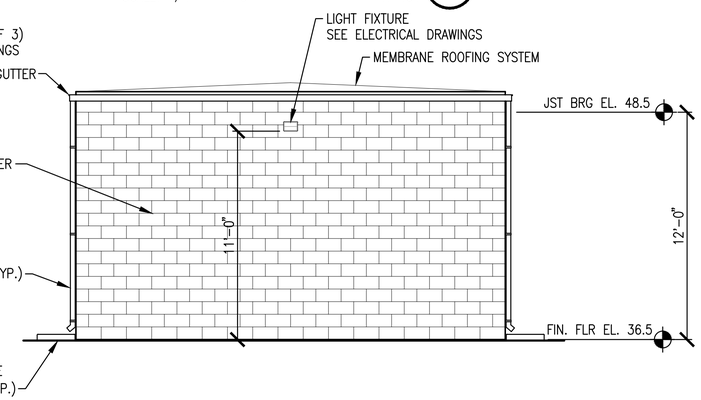

VAULT 155 ELEVATION 4

SCALE: 1/4" = 1'-0" A-401

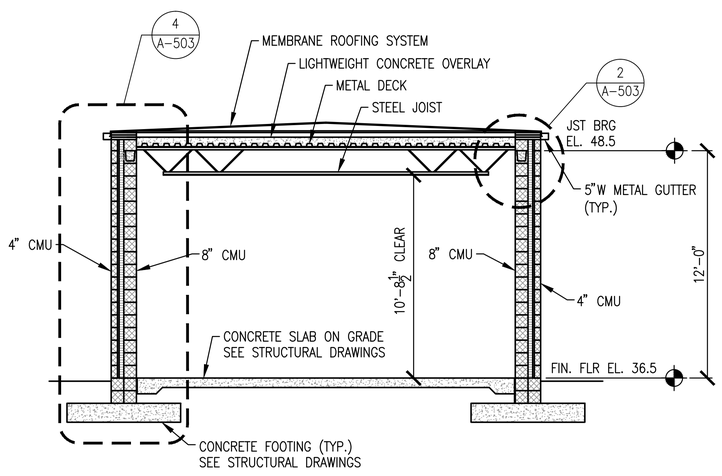

VAULT 155 BUILDING SECTION 5

SCALE: 1/4" = 1'-0" A-401

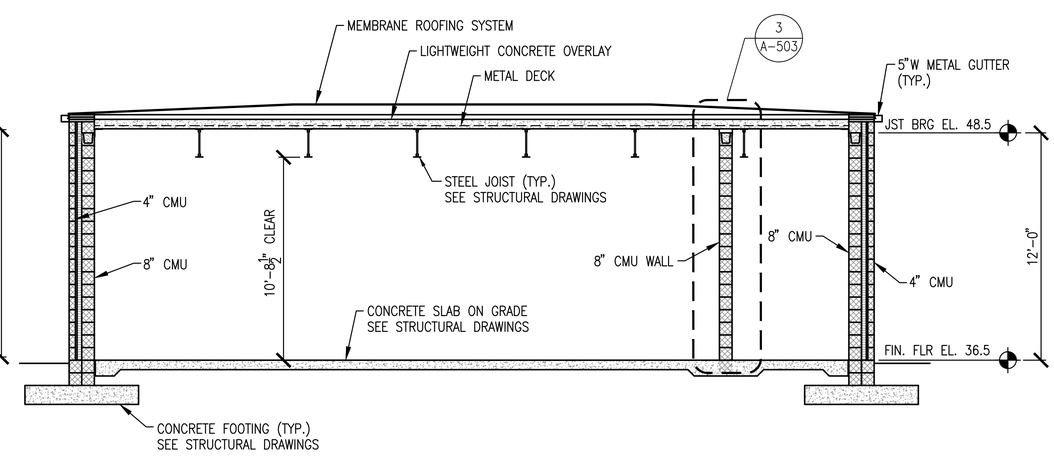

VAULT 155 BUILDING SECTION 6

SCALE: 1/4" = 1'-0" A-401

GENERAL SHEET NOTES:

1. BUILDING SIGN MOUNTED TO DOOR. LETTERING HEIGHT TO BE APPROXIMATELY 6" HIGH. VERIFY BUILDING SIGNAGE STANDARDS WITH BASE.

GRAPHIC SCALE

1/4"=1'-0"

1' 0 2' 4' 8'

SYM	DESCRIPTION	DATE	APPR

NAVFAC

ARCHITECTURAL REGISTRATION BOARD 5231-A STATE OF MARYLAND

Professional Certification
I HEREBY CERTIFY THAT THESE DOCUMENTS WERE PREPARED OR APPROVED BY ME, AND THAT I AM A DULY LICENSED PROFESSIONAL ARCHITECT UNDER THE LAWS OF THE STATE OF MARYLAND, LICENSE NO. 5231-A, EXPIRATION DATE: 05/16/17. SEAL

JOHNSON, MIRMIRAN & THOMPSON
Gannett Fleming
A Joint Venture
272 Bendix Road, Suite 260
Virginia Beach, Virginia, 23452
Telephone: (757) 499-1895
Web: www.jmt.com

A/E INFO

APPROVED

FOR COMMANDER NAVFAC

ACTIVITY

JAMES FLETCHER PER CHECKLIST
SATISFACTORY TO DATE 9/27/2016
DES DRE DRW DRE CHK JRS
PM/DM RH
BRANCH MANAGER
CHIEF ENG/ARCH E. GALLAHER, PE

DEPARTMENT OF THE NAVY
NAVAL FACILITIES ENGINEERING COMMAND
WASHINGTON, D.C.
NAVFAC WASHINGTON
IPT BLUE
NAVAL AIR STATION PATUXENT RIVER
PATUXENT RIVER, MARYLAND

FY16 SPECIAL PROJECT RM12-2137
REPAIR RUNWAYS 14-32 & 6-24 - PHASE 2

VAULT 155 - ELEVATIONS & BUILDING SECTIONS

SCALE: 1/4" = 1'-0"
EPROJECT NO.: 1382137
CONSTR. CONTR. NO. N40080-17-R-0002
NAVFAC DRAWING NO. 13079943
SHEET 85 OF 191

A-501

DRAWFORM REVISION: 10 MARCH 2009

FILE NAME: H:\59487 Pax River\Architectural\Planset\10-0863-009-A-501.dwg LAYOUT NAME: A-501 PLOTTED: Monday, September 26, 2016 - 1:45pm USER: devons

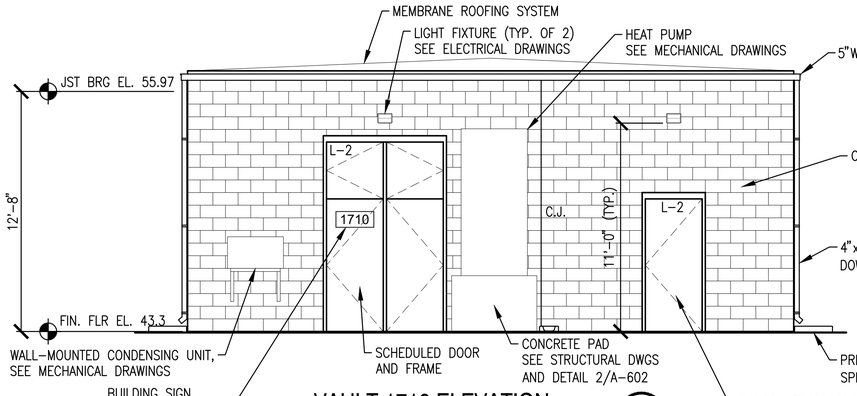

VAULT 1710 ELEVATION 1

SCALE: 1/4" = 1'-0" A-402

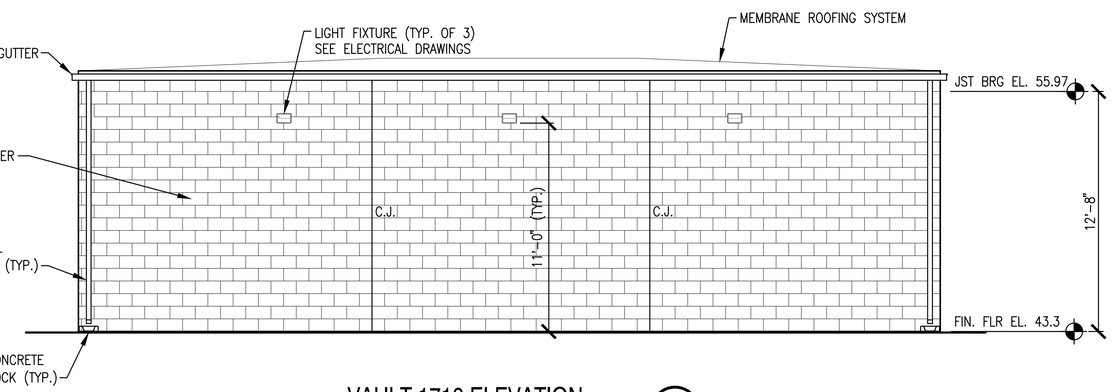

VAULT 1710 ELEVATION 2

SCALE: 1/4" = 1'-0" A-402

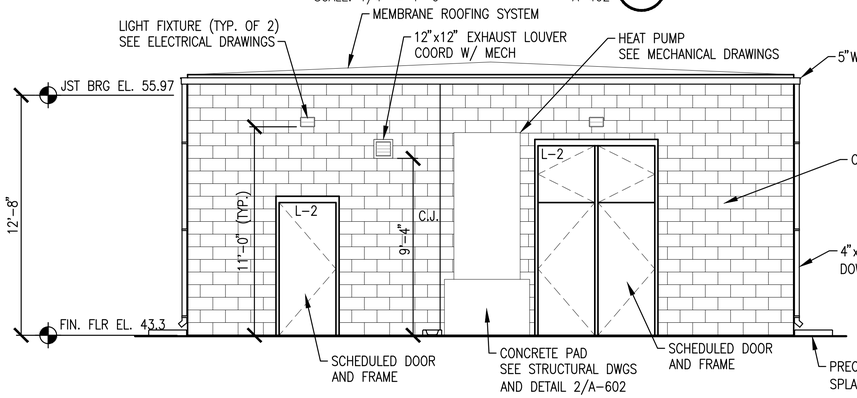

VAULT 1710 ELEVATION 3

SCALE: 1/4" = 1'-0" A-402

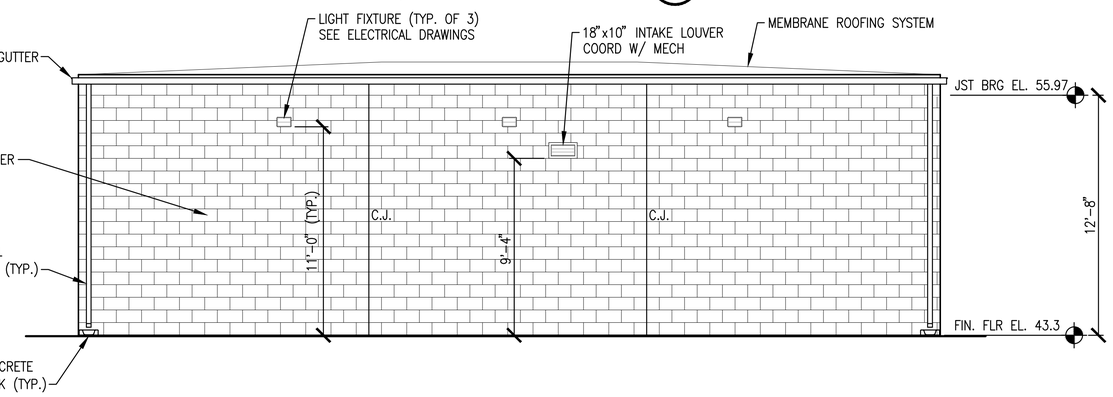

VAULT 1710 ELEVATION 4

SCALE: 1/4" = 1'-0" A-402

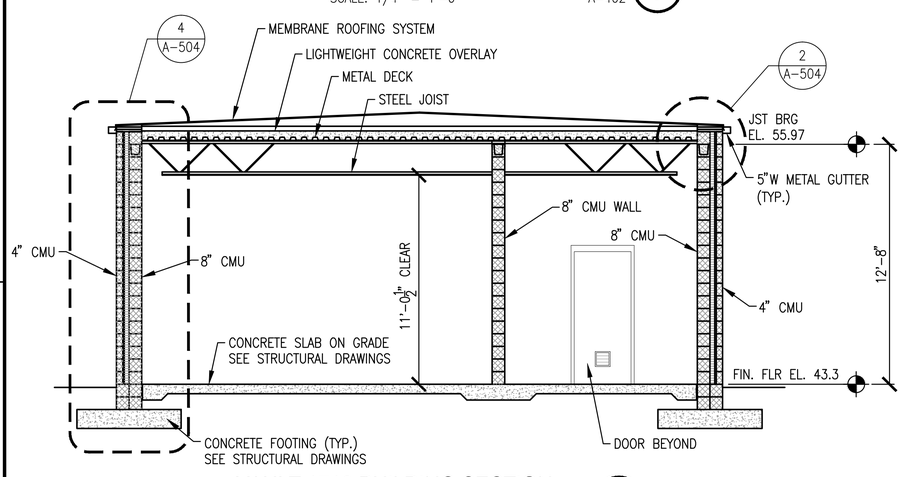

VAULT 1710 BUILDING SECTION 5

SCALE: 1/4" = 1'-0" A-402

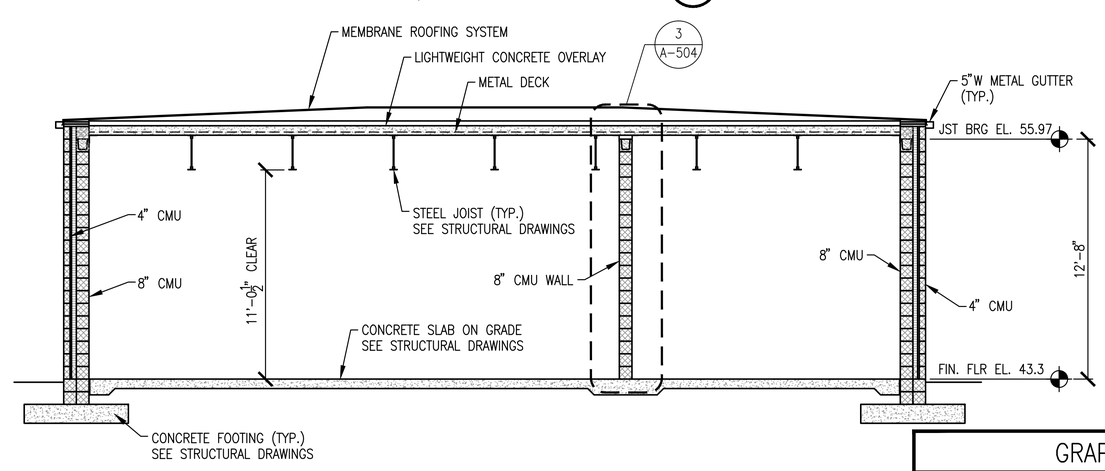

VAULT 1710 BUILDING SECTION 6

SCALE: 1/4" = 1'-0" A-402

GENERAL SHEET NOTES:

1. BUILDING SIGN MOUNTED TO DOOR. LETTERING HEIGHT TO BE APPROXIMATELY 6" HIGH. VERIFY BUILDING SIGNAGE STANDARDS WITH BASE.

GRAPHIC SCALE

1/4"=1'-0"

1' 0 2' 4' 8'

SYM	DESCRIPTION	DATE	APPR

NAVFAC

Professional Certification
I HEREBY CERTIFY THAT THESE DOCUMENTS WERE PREPARED OR APPROVED BY ME, AND THAT I AM A DULY LICENSED PROFESSIONAL ARCHITECT UNDER THE LAWS OF THE STATE OF MARYLAND, LICENSE NO. 5231-A, EXPIRATION DATE: 05/16/17.
SEAL

JOHNSON, MIRMIRAN & THOMPSON
Gannett Fleming
A Joint Venture
272 Bendix Road, Suite 260
Virginia Beach, Virginia, 23452
Telephone: (757) 499-1895
Web: www.jmt.com

A/E INFO

APPROVED
FOR COMMANDER NAVFAC
ACTIVITY
JAMES FLETCHER PER CHECKLIST
SATISFACTORY TO DATE 9/27/2016
DES DRE DRW DRE CHK JRS
PM/DM RH
BRANCH MANAGER
CHIEF ENG/ARCH E. GALLAHER, PE

DEPARTMENT OF THE NAVY
NAVAL FACILITIES ENGINEERING COMMAND
WASHINGTON, D.C.
NAVFAC WASHINGTON
NAVAL AIR STATION PATUXENT RIVER
PATUXENT RIVER, MARYLAND
FY16 SPECIAL PROJECT RM12-2137
REPAIR RUNWAYS 14-32 & 6-24 - PHASE 2
VAULT 1710 - ELEVATIONS & BUILDING SECTIONS

SCALE: 1/4" = 1'-0"
EPROJECT NO.: 1382137
CONSTR. CONTR. NO. N40080-17-R-0002
NAVFAC DRAWING NO. 13079944
SHEET 86 OF 191
A-502

DRAWFORM REVISION: 10 MARCH 2009

FILE NAME: H:\59487 Pax River\Architectural\Planset\10-0863-009-A-502.dwg LAYOUT NAME: A-502 PLOTTED: Monday, September 26, 2016 - 1:46pm USER: devons

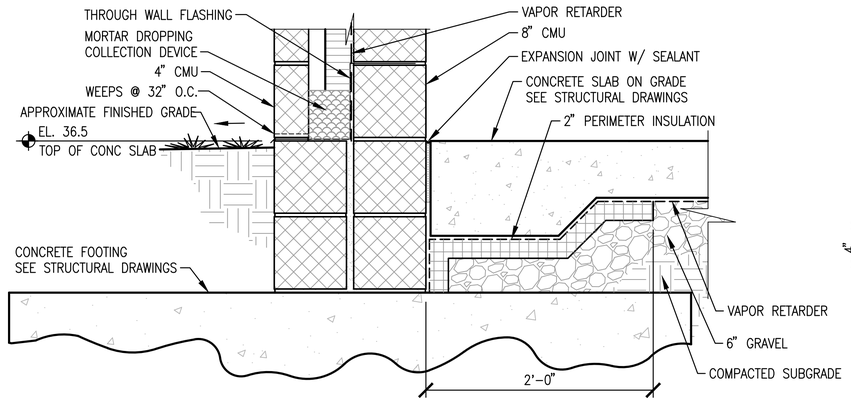

VAULT 155 FOUNDATION DETAIL (1)

SCALE: 1 1/2"=1'-0" A-503

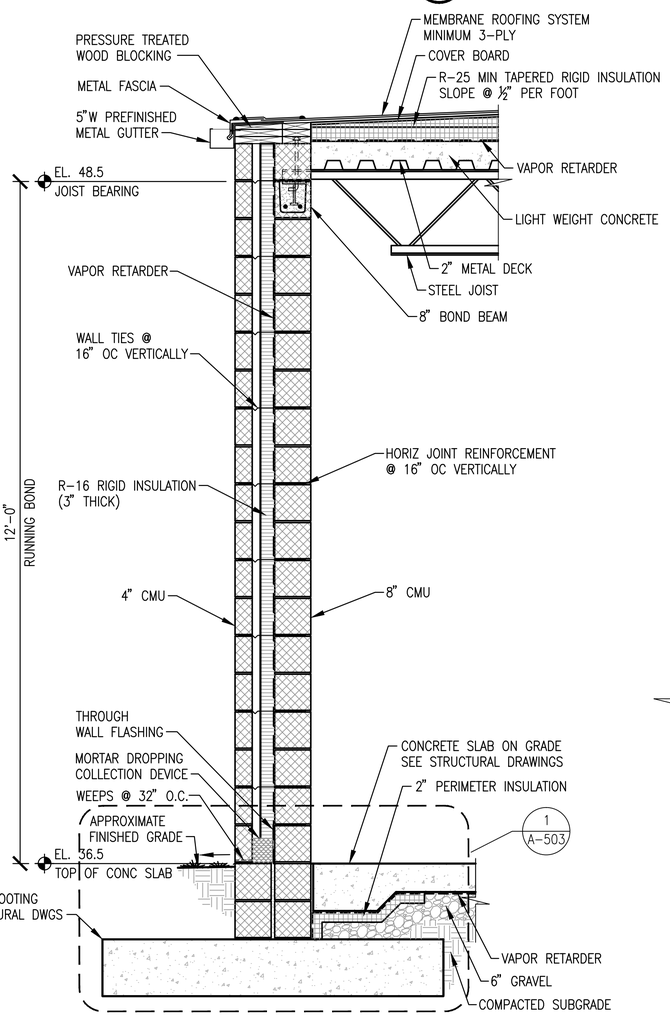

VAULT 155 WALL SECTION (4)

SCALE: 3/4"=1'-0" A-501

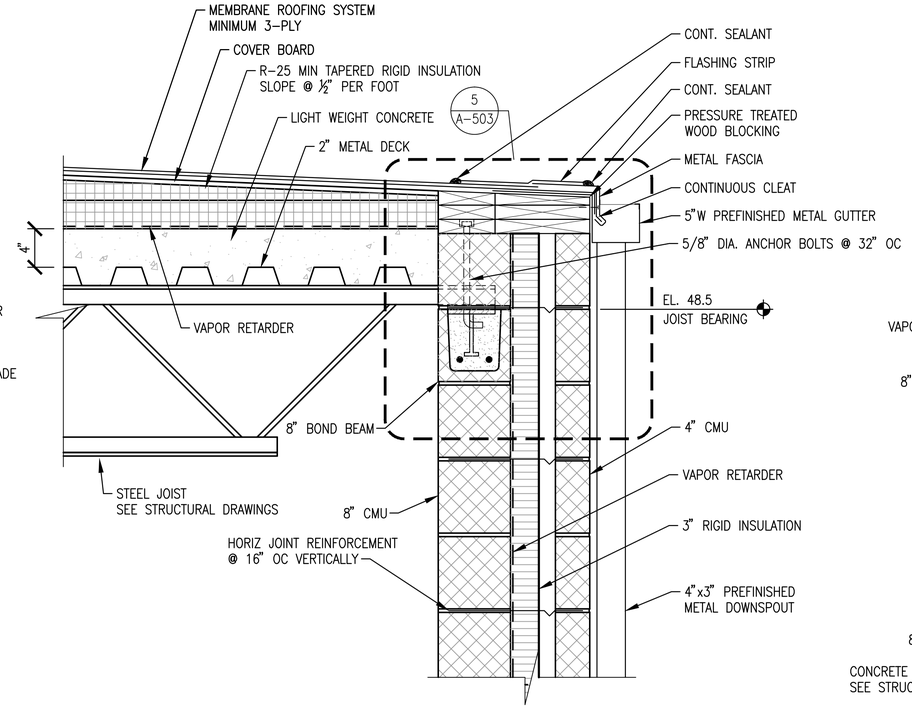

VAULT 155 ROOF DETAIL (2)

SCALE: 1 1/2"=1'-0" A-501

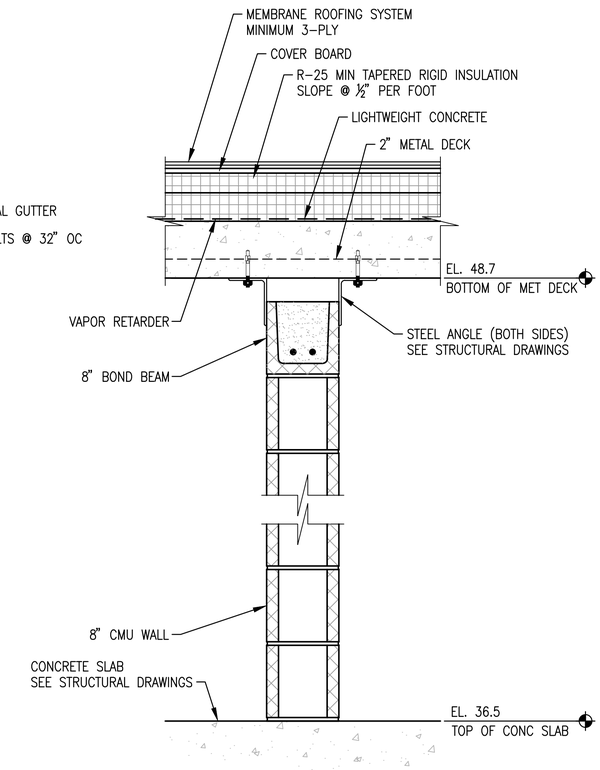

VAULT 155 WALL DETAIL (3)

SCALE: 1 1/2"=1'-0" A-401

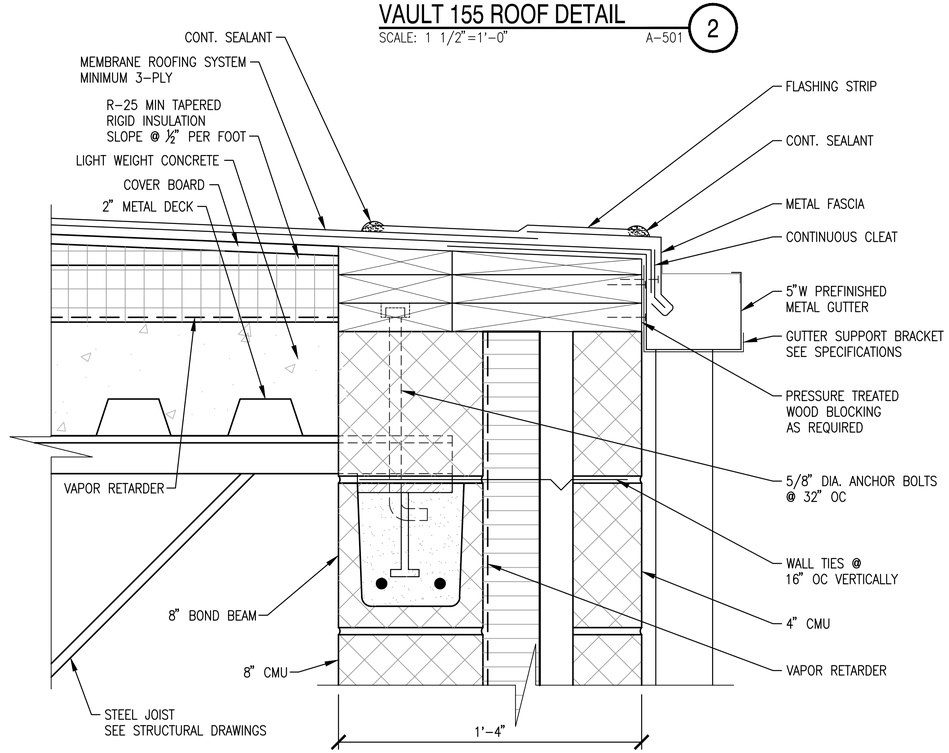

VAULT 155 ROOF DETAIL (5)

SCALE: 3"=1'-0" A-503

GENERAL SHEET NOTES:

1. REFER TO DRAWING A-001 FOR ARCHITECTURAL LEGEND, ABBREVIATIONS AND NOTES.
2. REFER TO CIVIL, STRUCTURAL, ELECTRICAL, AND MECHANICAL DRAWINGS FOR ADDITIONAL WORK.
3. SEE STRUCTURAL DRAWINGS FOR MASONRY VERTICAL REINFORCEMENT.

GRAPHIC SCALE

3/4"=1'-0" 1' 6" 0 1' 2' 3'

1 1/2"=1'-0" 3 2 1 0 3" 6" 12" 24"

3"=1'-0" 3 2 1 0 3" 6" 9" 12"

SYM	DESCRIPTION	DATE	APPR

NAVFAC

ARCHITECTURAL REGISTRATION BOARD 5231-A STATE OF MARYLAND

Professional Certification
I HEREBY CERTIFY THAT THESE DOCUMENTS WERE PREPARED OR APPROVED BY ME, AND THAT I AM A DULY LICENSED PROFESSIONAL ARCHITECT UNDER THE LAWS OF THE STATE OF MARYLAND, LICENSE NO. 5231-A, EXPIRATION DATE: 05/16/17. SEAL

JOHNSON, MIRMIRAN & THOMPSON
Gannett Fleming
A Joint Venture
272 Bendix Road, Suite 260
Virginia Beach, Virginia, 23452
Telephone: (757) 499-1895
Web: www.jmt.com

A/E INFO

APPROVED

FOR COMMANDER NAVFAC

ACTIVITY

JAMES FLETCHER PER CHECKLIST
SATISFACTORY TO DATE 9/27/2016
DES DRE DRW DRE CHK JRS
PM/DM RH
BRANCH MANAGER
CHIEF ENG/ARCH E. GALLAHER, PE

DEPARTMENT OF THE NAVY
NAVAL FACILITIES ENGINEERING COMMAND
WASHINGTON, D.C.
NAVFAC WASHINGTON
NAVAL AIR STATION PATUXENT RIVER
PATUXENT RIVER, MARYLAND
IPT BLUE
FY16 SPECIAL PROJECT RM12-2137
REPAIR RUNWAYS 14-32 & 6-24 - PHASE 2
VAULT 155 - WALL SECTIONS AND DETAILS

SCALE: AS SHOWN
EPROJECT NO.: 1382137
CONSTR. CONTR. NO. N40080-17-R-0002
NAVFAC DRAWING NO. 13079945
SHEET 87 OF 191
A-503

DRAWFORM REVISION: 10 MARCH 2009

FILE NAME: H:\59487 Pax River\Architectural\Planset\10-0863-009-A-503.dwg LAYOUT NAME: A-503 PLOTTED: Monday, September 26, 2016 - 1:47pm USER: devons

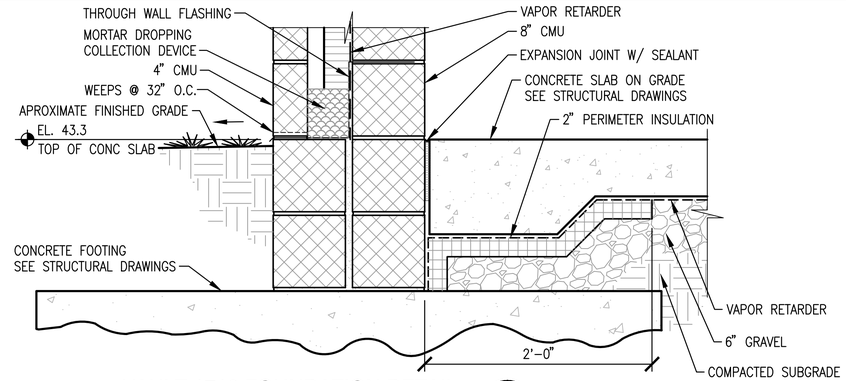

VAULT 1710 FOUNDATION DETAIL (1)

SCALE: 1 1/2"=1'-0" A-504

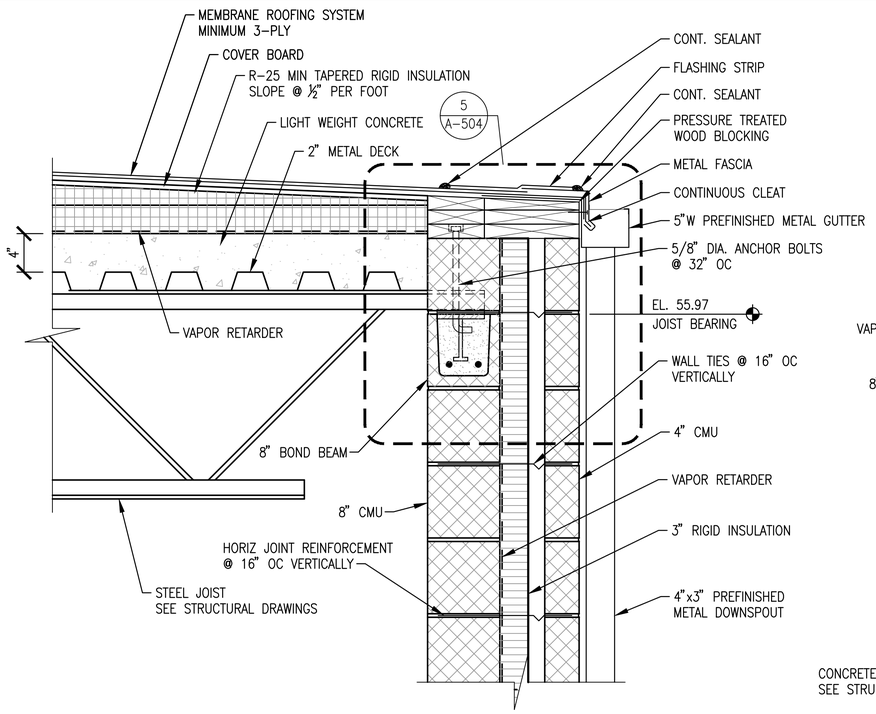

VAULT 1710 ROOF DETAIL (2)

SCALE: 1 1/2"=1'-0" A-502

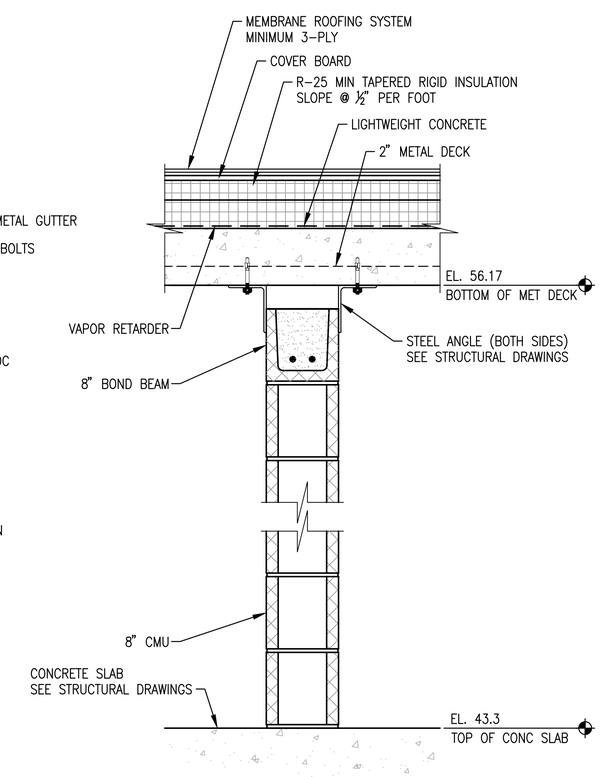

VAULT 1710 WALL DETAIL (3)

SCALE: 1 1/2"=1'-0" A-402

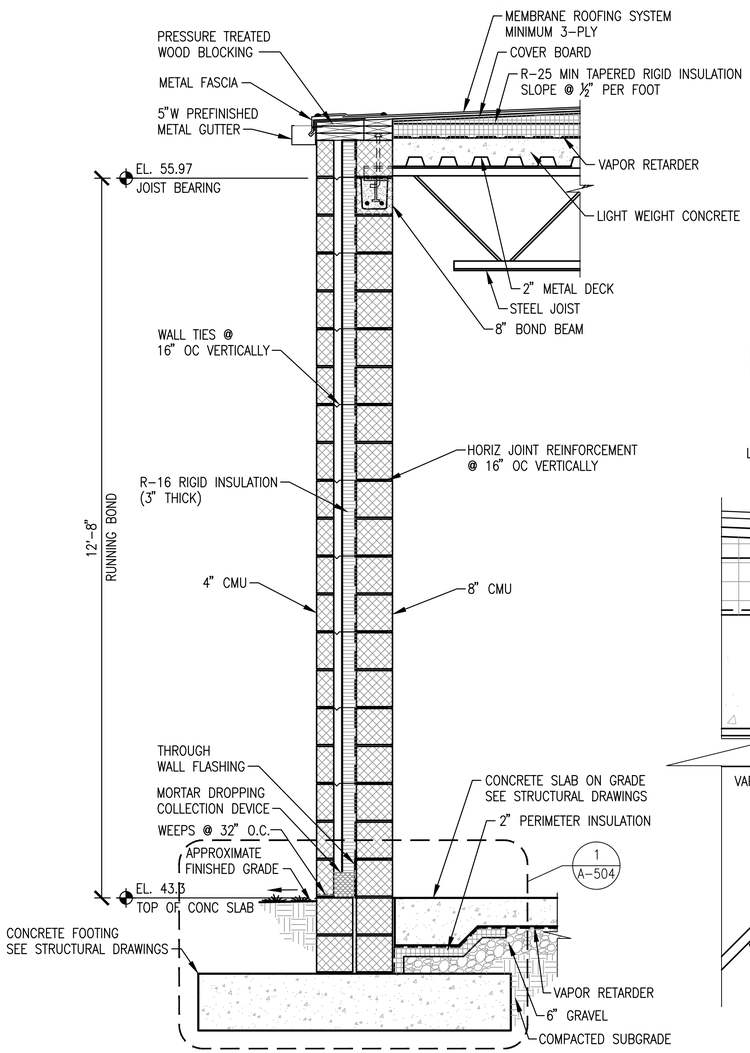

VAULT 1710 WALL SECTION (4)

SCALE: 3/4"=1'-0" A-502

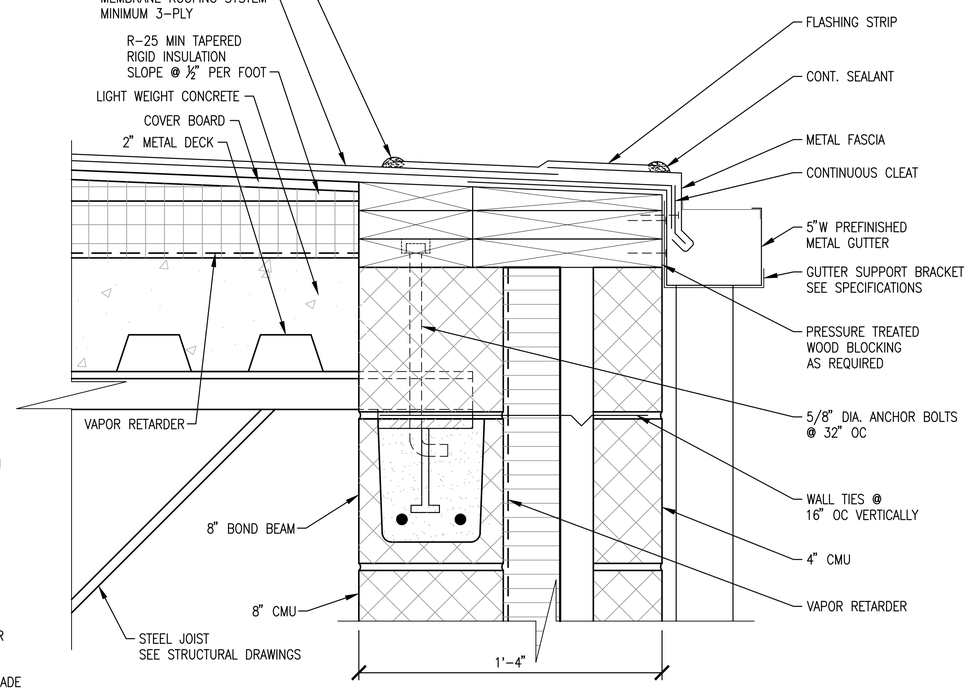

VAULT 1710 ROOF DETAIL (5)

SCALE: 3"=1'-0" A-504

GENERAL SHEET NOTES:

1. REFER TO DRAWING A-001 FOR ARCHITECTURAL LEGEND, ABBREVIATIONS AND NOTES.
2. REFER TO CIVIL, STRUCTURAL, ELECTRICAL, AND MECHANICAL DRAWINGS FOR ADDITIONAL WORK.
3. SEE STRUCTURAL DRAWINGS FOR MASONRY VERTICAL REINFORCEMENT.

GRAPHIC SCALE

3/4"=1'-0" 1' 6" 0 1' 2' 3'

1 1/2"=1'-0" 3 2 1 0 3" 6" 12" 24"

3"=1'-0" 3 2 1 0 3" 6" 9" 12"

SYM	DESCRIPTION	DATE	APPR

NAVFAC

Professional Certification
I HEREBY CERTIFY THAT THESE DOCUMENTS WERE PREPARED OR APPROVED BY ME, AND THAT I AM A DULY LICENSED PROFESSIONAL ARCHITECT UNDER THE LAWS OF THE STATE OF MARYLAND, LICENSE NO. 5231-A, EXPIRATION DATE: 05/16/17. SEAL

JOHNSON, MIRMIRAN & THOMPSON
Gannett Fleming
A Joint Venture
272 Bendix Road, Suite 260
Virginia Beach, Virginia, 23452
Telephone: (757) 499-1895
Web: www.jmt.com

A/E INFO

APPROVED
FOR COMMANDER NAVFAC
ACTIVITY
JAMES FLETCHER PER CHECKLIST
SATISFACTORY TO DATE 9/27/2016
DES DRE DRW DRE CHK JRS
PM/DM RH
BRANCH MANAGER
CHIEF ENG/ARCH E. GALLAHER, PE

DEPARTMENT OF THE NAVY
NAVAL FACILITIES ENGINEERING COMMAND WASHINGTON, D.C.
NAVFAC WASHINGTON
NAVAL AIR STATION PATUXENT RIVER
PATUXENT RIVER, MARYLAND
PT BLUE
FY16 SPECIAL PROJECT RM12-2137
REPAIR RUNWAYS 14-32 & 6-24 - PHASE 2
VAULT 1710 – WALL SECTIONS AND DETAILS

SCALE: AS SHOWN
EPROJECT NO.: 1382137
CONSTR. CONTR. NO. N40080-17-R-0002
NAVFAC DRAWING NO. 13079946
SHEET 88 OF 191
A-504

DRAWFORM REVISION: 10 MARCH 2009

FILE NAME: H:\59487 Pax River\Architectural\Planset\10-0863-009-A-504.dwg LAYOUT NAME: A-504 PLOTTED: Monday, September 26, 2016 - 1:32pm USER: devans

DOORS AND FRAMES

VAULT #	DOOR NUMBER	DOOR SIZE W	DOOR SIZE H	DOOR SIZE T	DOOR MAT	DOOR TYPE	DOOR FINISH	DOOR GLASS	DOOR LOUVER W	DOOR LOUVER H	FRAME MAT	FRAME TYPE	FRAME DETAILS FINISH	FRAME DETAILS HEAD	FRAME DETAILS JAMB(S)	FRAME DETAILS SILL	FIRE RATING LAB	FIRE RATING HOUR	HARDWARE SET NO.	LINTEL	REMARKS
155	1	3'-0"	7'-0"	1 3/4"	HM	A	PT	–	–	–	HM	1	PT	1	2	3	–	–	1	L-2	
	2	3'-0"	7'-0"	1 3/4"	HM	A	PT	–	8"	8"	HM	1	PT	4	5	6	–	–	2	L-1	
	3	(2)3'-0"	10'-0"	1 3/4"	HM	B	PT	–	–	–	HM	2	PT	1	2	3	–	–	3	L-2	1
1710	4	(2)3'-0"	10'-0"	1 3/4"	HM	B	PT	–	–	–	HM	2	PT	1	2	3	–	–	3	L-2	1
	5	3'-0"	7'-0"	1 3/4"	HM	A	PT	–	–	–	HM	1	PT	1	2	3	–	–	1	L-2	
	6	3'-0"	7'-0"	1 3/4"	HM	A	PT	–	8"	8"	HM	1	PT	4	5	6	–	–	2	L-1	
	7	(2)3'-0"	7'-0"	1 3/4"	HM	C	PT	–	8"	8"	HM	3	PT	4	5	6	–	–	4	L-1	2
	8	(2)3'-0"	10'-0"	1 3/4"	HM	B	PT	–	–	–	HM	2	PT	1	2	3	–	–	1	L-2	1
	9	3'-0"	7'-0"	1 3/4"	HM	A	PT	–	–	–	HM	1	PT	1	2	3	–	–	3	L-2	

NOTES: 1. OPERABLE TRANSOM WITH MANUAL FLUSH BOLTS.
2. INACTIVE LEAF WITH MANUAL FLUSH BOLT.

LINTEL SCHEDULE

L-1	8" PRE-CAST CMU LINTEL – 8" BEARING AT EACH END
L-2	8" PRE-CAST CMU LINTEL – 8" BEARING AT EACH END & 4"x4"x5/8" STEEL ANGLE

LOUVER SCHEDULE

LV1	12" x 12"
LV2	18" x 10"

ROOM FINISHES

VAULT #	ROOM #	ROOM NAME	FLOOR MATERIAL	BASE/TRIM MATERIAL	WALL MATERIAL	CEILING MATERIAL	CEILING HEIGHT	REMARKS
155	100	CONTROL ROOM	CONCRETE-SEALANT/HARDENER	PAINT	CMU – PAINT	EXPOSED	–	1
	101	ELECTRICAL ROOM	CONCRETE-SEALANT/HARDENER	PAINT	CMU – PAINT	EXPOSED	–	1
1710	100	ELECTRICAL ROOM	CONCRETE-SEALANT/HARDENER	PAINT	CMU – PAINT	EXPOSED	–	1
	101	ELECTRICAL ROOM	CONCRETE-SEALANT/HARDENER	PAINT	CMU – PAINT	EXPOSED	–	1
	102	STORAGE ROOM	CONCRETE-SEALANT/HARDENER	PAINT	CMU – PAINT	EXPOSED	–	1

NOTES: 1. PAINT STEEL JOISTS AND CONDUIT.

FRAME TYPES

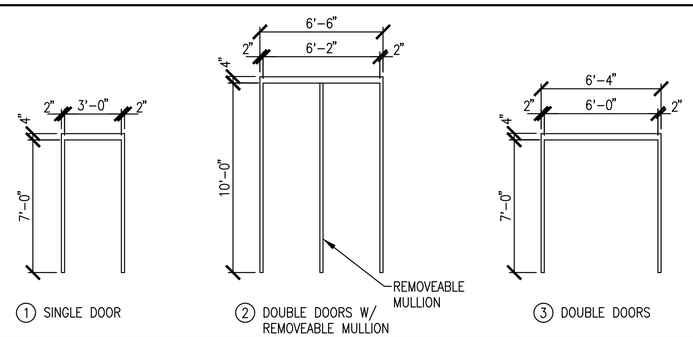

1 SINGLE DOOR
2 DOUBLE DOORS W/ REMOVEABLE MULLION
3 DOUBLE DOORS

DOOR TYPES

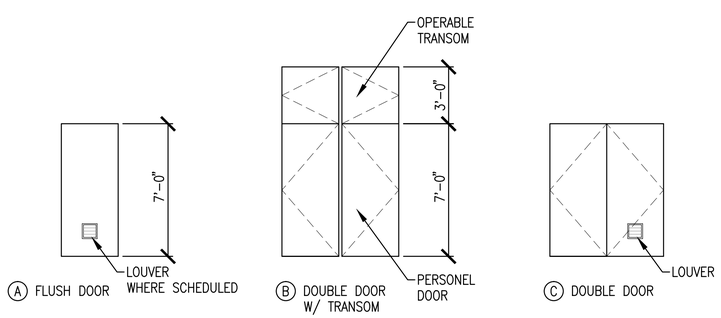

A FLUSH DOOR
B DOUBLE DOOR W/ TRANSOM
C DOUBLE DOOR

FRAME DETAILS

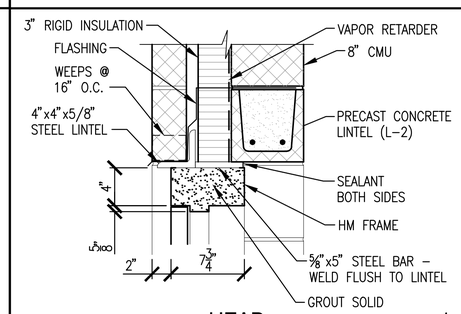

HEAD 1

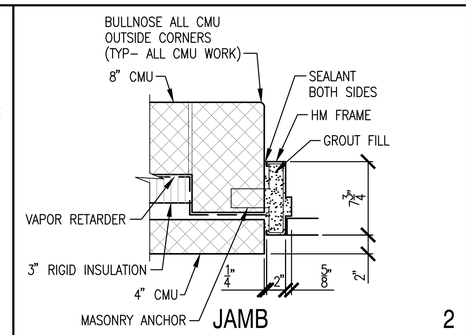

JAMB 2

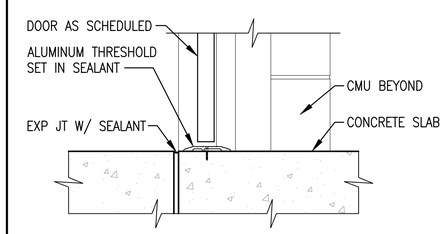

SILL 3

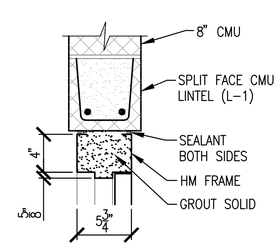

HEAD 4

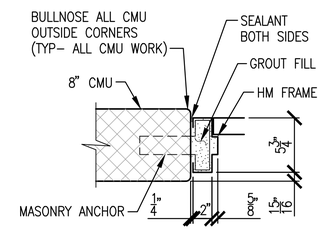

JAMB 5

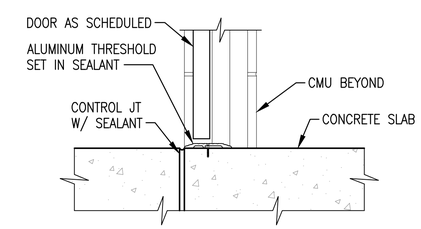

SILL 6

APPR	
DATE	
DESCRIPTION	
SYM	

NAVFAC

Professional Certification
I HEREBY CERTIFY THAT THESE DOCUMENTS WERE PREPARED OR APPROVED BY ME, AND THAT I AM A DULY LICENSED PROFESSIONAL ARCHITECT UNDER THE LAWS OF THE STATE OF MARYLAND, LICENSE NO. 5231-A, EXPIRATION DATE: 05/18/17.
SEAL

JOHNSON, MIRMIRAN & THOMPSON
Gannett Fleming
A Joint Venture
272 Bendix Road, Suite 260
Virginia Beach, Virginia, 23452
Telephone: (757) 499-1895
Web: www.jmt.com

A/E INFO

APPROVED
FOR COMMANDER NAVFAC
ACTIVITY
JAMES FLETCHER PER CHECKLIST
SATISFACTORY TO DATE 9/27/2016
DES DRE DRW DRE CHK JRS
PM/DM RH
BRANCH MANAGER
CHIEF ENG/ARCH E. GALLAHER, PE

DEPARTMENT OF THE NAVY
NAVAL FACILITIES ENGINEERING COMMAND WASHINGTON, D.C.
NAVFAC WASHINGTON
NAVAL AIR STATION PATUXENT RIVER
PATUXENT RIVER, MARYLAND
PT BLUE
FY16 SPECIAL PROJECT RM12-2137
REPAIR RUNWAYS 14-32 & 6-24 - PHASE 2
VAULT 155 & 1710 SCHEDULES AND DETAILS

SCALE: AS SHOWN
EPROJECT NO.: 1382137
CONSTR. CONTR. NO. N40080-17-R-0002
NAVFAC DRAWING NO. 13079947
SHEET 89 OF 191
A-601

DRAWFORM REVISION: 10 MARCH 2009

FILE NAME: H:\59487 Pax River\Architectural\Planset\10-0863-009-A-601.dwg LAYOUT NAME: Layout1 PLOTTED: Monday, September 26, 2016 - 1:49pm USER: devons

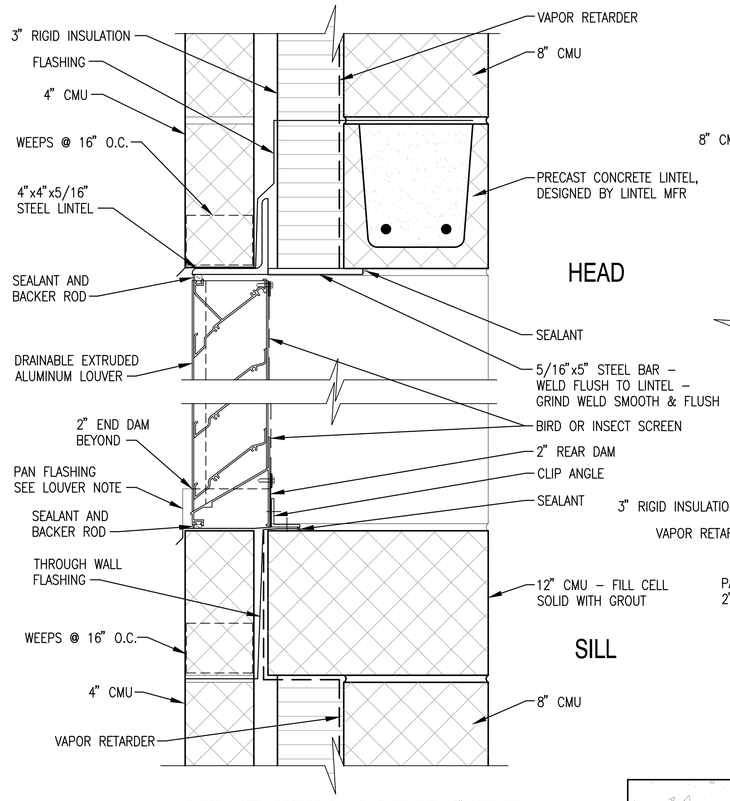

LOUVER NOTE: PROVIDE PAN FLASHING WITH 2" MINIMUM REAR AND END DAMS AT LOUVER SILLS.

VAULT 155 & 1710 LOUVER DETAILS (1)

SCALE: 3"=1'-0" A-501, A-502

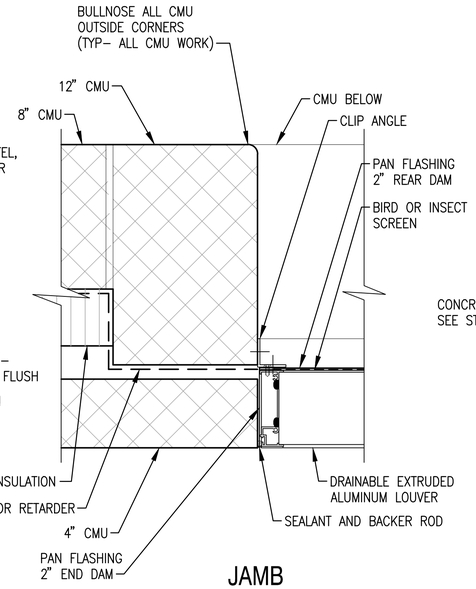

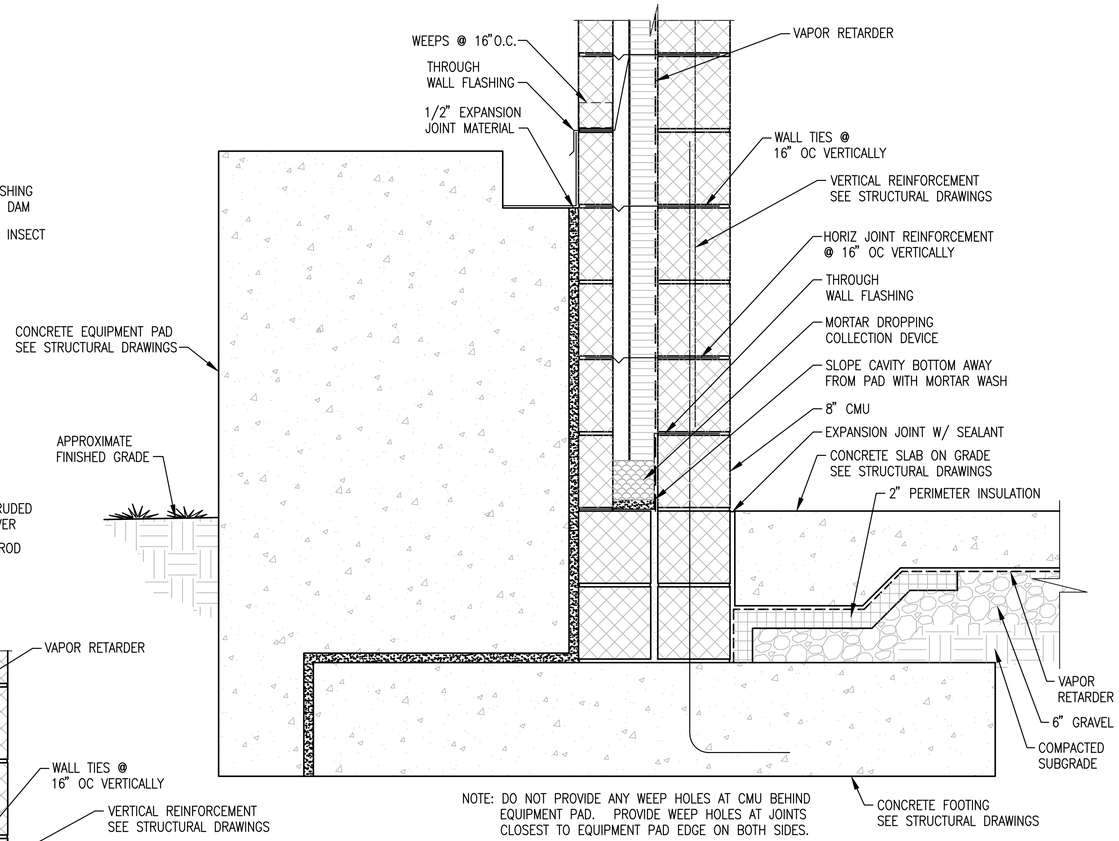

NOTE: DO NOT PROVIDE ANY WEEP HOLES AT CMU BEHIND EQUIPMENT PAD. PROVIDE WEEP HOLES AT JOINTS CLOSEST TO EQUIPMENT PAD EDGE ON BOTH SIDES.

VAULT 155 SECTION DETAIL @ EQUIPMENT PADS (3)

SCALE: 1 1/2"=1'-0" A-501

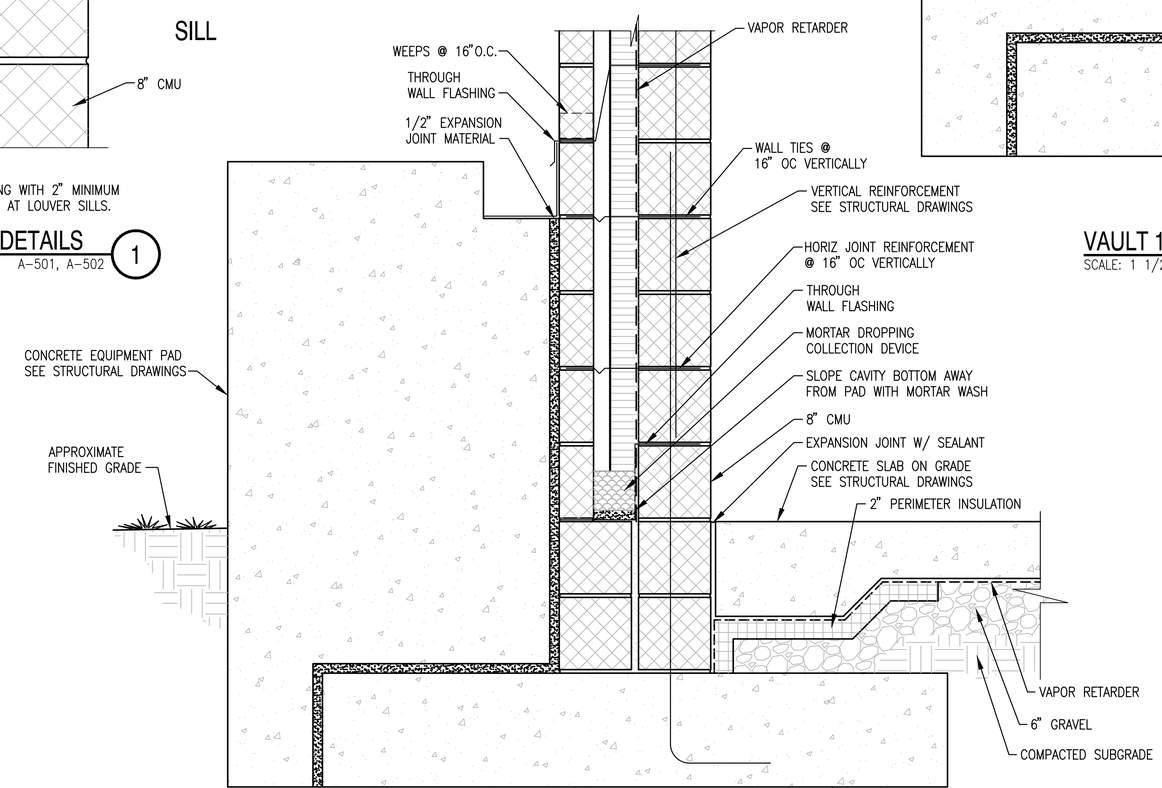

NOTE: DO NOT PROVIDE ANY WEEP HOLES AT CMU BEHIND EQUIPMENT PAD. PROVIDE WEEP HOLES AT JOINTS CLOSEST TO EQUIPMENT PAD EDGE ON BOTH SIDES.

VAULT 1710 SECTION DETAIL @ EQUIPMENT PADS (2)

SCALE: 1 1/2"=1'-0" A-502

GRAPHIC SCALE

1 1/2"=1'-0" 3 2 1 0 3" 6" 12" 24"

3"=1'-0" 3 2 1 0 3" 6" 9" 12"

APPR	DATE	DESCRIPTION	SYM

NAVFAC

ARCHITECTURAL REGISTRATION BOARD 5231-A STATE OF MARYLAND

Professional Certification
I HEREBY CERTIFY THAT THESE DOCUMENTS WERE PREPARED OR APPROVED BY ME, AND THAT I AM A DULY LICENSED PROFESSIONAL ARCHITECT UNDER THE LAWS OF THE STATE OF MARYLAND, LICENSE NO. 5231-A, EXPIRATION DATE: 05/16/17. SEAL

JOHNSON, MIRMIRAN & THOMPSON
Gannett Fleming
A Joint Venture
272 Bendix Road, Suite 260
Virginia Beach, Virginia, 23452
Telephone: (757) 499-1895
Web: www.jmt.com

A/E INFO

APPROVED

FOR COMMANDER NAVFAC

ACTIVITY

JAMES FLETCHER PER CHECKLIST

SATISFACTORY TO DATE 9/27/2016

DES. DRE DRW DRE CHK JRS

PM/DM RH

BRANCH MANAGER

CHIEF ENG/ARCH E. GALLAHER, PE

DEPARTMENT OF THE NAVY
NAVAL FACILITIES ENGINEERING COMMAND
NAVFAC WASHINGTON
WASHINGTON, D.C.

PT BLUE

NAVAL AIR STATION PATUXENT RIVER
PATUXENT RIVER, MARYLAND

FY16 SPECIAL PROJECT RM12-2137
REPAIR RUNWAYS 14-32 & 6-24 - PHASE 2

VAULT 155 & 1710 MISCELLANEOUS DETAILS

SCALE: AS SHOWN

EPROJECT NO.: 1382137

CONSTR. CONTR. NO. N40080-17-R-0002

NAVFAC DRAWING NO. 13079948

SHEET 90 OF 191

A-602

DRAWFORM REVISION: 10 MARCH 2009

FILE NAME: H:\594867 Pax River\Architecture\Planset\10-0863-009-A-602.dwg LAYOUT NAME: Layout1 PLOTTED: Monday, September 26, 2016 - 1:52pm USER: devons

MECHANICAL LEGEND:

SYMBOL	DESCRIPTION
18x12	DUCT (FIRST FIGURE SIDE SHOWN)
D	DROP IN DIRECTION OF ARROW
R	RISE IN DIRECTION OF ARROW
S D	SMOKE DETECTOR
	AIR MEASURING DEVICE
	SUPPLY AIR DIFFUSER
	RETURN AIR GRILLE
	EXHAUST AIR GRILLE
FD	FIRE DAMPER
S	SMOKE DAMPER
F/S	COMBINATION FIRE/SMOKE DAMPER
	MANUAL VOLUME DAMPER
	SQUARE TO ROUND DUCT TRANSITION
	FLEXIBLE CONNECTION
	DUCTWORK SOUND LINING, 1" THICK
AD	ACCESS DOOR
	DUCT TRANSITION
	RECTANGULAR BRANCH TAKE-OFF
	BELL MOUTH BRANCH TAKE-OFF
	ROUND BRANCH TAKE-OFF
	CIRCULAR AIR DIFFUSER
	CIRCULAR DUCT DROP OFF BOTTOM
	SUPPLY AIR DEVICE WITH 2'x2' LAY-IN PANEL
	RETURN AIR DEVICE WITH 2'x2' LAY-IN PANEL
T	THERMOSTAT, SPACE TEMPERATURE SENSOR
$	WALL SWITCH
EOD	ELECTRIC OPERATED DAMPER
ø	DIAMETER
X	SHEET KEYNOTE

ABBREVIATIONS:

@	AT
ABV	ABOVE
AD	ACCESS DOOR
AFF	ABOVE FINISHED FLOOR
APD	AIR PRESSURE DROP
APPROX	APPROXIMATELY
ATC	AUTOMATIC TEMPERATURE CONTROL
BDD	BACKDRAFT DAMPER
BHP	BRAKE HORSEPOWER
BLDG	BUILDING
BLW	BELOW
BTM	BOTTOM
BTU/HR	BRITISH THERMAL UNITS PER HOUR
CD	CONDENSATE DRAIN
CFM	CUBIC FEET PER MINUTE
CLG	COOLING
CONC	CONCRETE
CONN	CONNECT, CONNECTION
CONT'N	CONTINUATION
CU	CONDENSING UNIT
D	SUPPLY AIR DIFFUSER, OR DEEP, DEPTH
DB	DECIBEL OR DRY BULB
DIA, ø	DIAMETER
DL	DOOR LOUVER
DN	DOWN
DPR	DAMPER
DWG	DRAWING
EA	EXHAUST AIR
EAT	ENTERING AIR TEMPERATURE
EDB	ENTERING DRY BULB
EF	EXHAUST FAN
EOD	ELECTRIC OPERATED DAMPER
ESP	EXTERNAL STATIC PRESSURE
EXH	EXHAUST
EXP	EXPANSION
FL	FLOOR
FPM	FEET PER MINUTE
FPS	FEET PER SECOND
FT, '	FOOT, FEET
GPM	GALLONS PER MINUTE
H	HIGH, HEIGHT
H2O	WATER
HP	HEAT PUMP
HZ	HERTZ
IN, "	INCH, INCHES
KW	KILOWATTS
L	LONG, LENGTH
LAT	LEAVING AIR TEMPERATURE
LBS	POUNDS
LBS/HR	POUNDS PER HOUR
LDB	LEAVING DRY BULB
LF	LINEAR FEET
MBH	THOUSAND BRITISH THERMAL UNITS PER HOUR
MECH	MECHANICAL
MFR	MANUFACTURER
MIN	MINIMUM
MOD	MOTOR OPERATED DAMPER
MTD	MOUNTED
NC	NOISE CRITERIA OR NORMALLY CLOSED
NIC	NOT IN CONTRACT
No	NUMBER
OA	OUTDOOR AIR
OAT	OUTDOOR AIR TEMPERATURE
OC	ON CENTER
%	PERCENT
REQ'D	REQUIRED
RLA	RUNNING LOAD AMPERES
RM	ROOM
RPM	REVOLUTIONS PER MINUTE
RP	REFRIGERANT PIPING
RS	REFRIGERANT SUCTION
SF	SUPPLY FAN OR SQUARE FEET
S/M	SHEET METAL
SP	STATIC PRESSURE
SPEC	SPECIFICATION
SQ	SQUARE
SQ FT	DROP SQUARE FOOT
S/S	STAINLESS STEEL
STL	STEEL
TEMP, T	TEMPERATURE
TG	TRANSFER GRILLE
TSP	TOTAL STATIC PRESSURE
TYP	TYPICAL
V	VOLTS, VACUUM PIPE
VEL	VELOCITY
VIB	VIBRATION
W/	WITH
W/O	WITHOUT

GENERAL NOTES:

1. GENERAL NOTES ON THIS DRAWING ARE APPLICABLE TO EACH DRAWING OF THIS SET. REFER TO DRAWINGS FOR SPECIFIC NOTES APPLICABLE TO EACH DRAWING.
2. CONTRACTOR SHALL THOROUGHLY REVIEW ALL MECHANICAL, ELECTRICAL, AND ARCHITECTURAL DRAWINGS, PRIOR TO ANY WORK BEING PERFORMED.
3. DRAWINGS DO NOT INDICATE ALL PIPING, ELECTRICAL CONDUITS, SUPPORTS, CABLE TRAYS OR STRUCTURAL ELEMENTS THAT ARE TYPICALLY BY OTHER TRADES. REVIEW DRAWINGS OF OTHER TRADES FOR INTERFERENCE OF WORK PRIOR TO INSTALLATION.
4. CONTRACTOR SHALL INSTALL EQUIPMENT IN ACCORDANCE WITH MANUFACTURER'S RECOMMENDATIONS.
5. IT IS THE INTENTION OF THE DRAWINGS TO COVER ALL WORK AND MATERIAL FOR A COMPLETE INSTALLATION. ANY EQUIPMENT, HARDWARE, AND/OR DEVICES NORMALLY UTILIZED FOR A COMPLETE INSTALLATION, THOUGH NOT SPECIFICALLY MENTIONED OR SHOWN ON THE DRAWINGS, SHALL BE FURNISHED AND INSTALLED BY THE CONTRACTOR AS PART OF HIS WORK.
6. ENTIRE INSTALLATION, INCLUDING MATERIALS, EQUIPMENT, AND WORKMANSHIP, SHALL CONFORM WITH ALL APPLICABLE LAWS, CODES, AND REGULATIONS OF MUNICIPAL, STATE, AND FEDERAL AUTHORITIES, THE LATEST EDITION OF THE STATE BUILDING CODES, AND OTHER REGULATORY BODIES HAVING JURISDICTION OVER THE CLASS OF WORK.
7. DUCTWORK AND PIPING ARRANGEMENTS ARE DIAGRAMMATIC.
8. ARRANGE PIPING AND DUCTWORK, AS REQUIRED, TO CLEAR STRUCTURE, DUCTS, CONDUITS, ETC. ALLOWING SPACE FOR PIPE HANGERS AND ACCESS TO VALVES, FILTERS, AND MAINTENANCE OF EQUIPMENT.
9. ALL WORK SHALL BE DONE IN ACCORDANCE WITH NATIONAL ELECTRICAL CODE, NFPA 70, SMACNA, NFPA 96A, AND UL 300.
10. PROVIDE ALL NECESSARY CONTACTORS, STARTERS, TRANSFORMERS, RELAYS, WIRING AND CONDUIT NECESSARY FOR COMPLETE OPERATIONAL HEATING, VENTILATING, AND COOLING SYSTEMS.
11. ALL DIMENSIONS AND PIPE SIZES ARE IN INCHES, UNLESS NOTED OTHERWISE.

DESIGN CRITERA:

	DESIGN CONDITION
OUTSIDE AIR	SUMMER: 94.7 °F DB/76.4 °F WB
	WINTER: 14.7 °F DB
VAULT 155	80 °F DB, COOLING; 55 °DB HEATING
VAULT 1710	80 °F DB, COOLING; 55 °DB HEATING

SYM	DESCRIPTION	DATE	APPR

NAVFAC

STATE OF MARYLAND MATTHEW GRACE No. 15486 PROFESSIONAL ENGINEER

Professional Certification
I HEREBY CERTIFY THAT THESE DOCUMENTS WERE PREPARED OR APPROVED BY ME, AND THAT I AM A DULY LICENSED PROFESSIONAL ENGINEER UNDER THE LAWS OF THE STATE OF MARYLAND, LICENSE NO. 15486, EXPIRATION DATE: 07/17/17.
SEAL

JOHNSON, MIRMIRAN & THOMPSON
Gannett Fleming
A Joint Venture
272 Bendix Road, Suite 260
Virginia Beach, Virginia, 23452
Telephone: (757) 499-1895
Web: www.jmt.com

A/E INFO

APPROVED

FOR COMMANDER NAVFAC

ACTIVITY

JAMES FLETCHER PER CHECKLIST
SATISFACTORY TO DATE 9/27/2016

DES KC DRW KC CHK MJG
PM/DM RH
BRANCH MANAGER
CHIEF ENG/ARCH E. GALLAHER, PE

DEPARTMENT OF THE NAVY
NAVAL FACILITIES ENGINEERING COMMAND
NAVFAC WASHINGTON
WASHINGTON, D.C.
IPT BLUE
NAVAL AIR STATION PATUXENT RIVER
PATUXENT RIVER, MARYLAND
FY16 SPECIAL PROJECT RM12-2137
REPAIR RUNWAYS 14-32 & 6-24 - PHASE 2
MECHANICAL LEGEND, ABBREVIATIONS, AND NOTES

SCALE: NONE
EPROJECT NO.: 1382137
CONSTR. CONTR. NO. N40080-17-R-0002
NAVFAC DRAWING NO. 13079949
SHEET 91 OF 191

M-001

DRAWFORM REVISION: 10 MARCH 2009

FILE NAME: H:\59487 Pax River\Mechanical\Planset\10-0863-009-M-001.dwg LAYOUT NAME: M-001 PLOTTED: Monday, September 26, 2016 - 11:43am USER: jhodgson

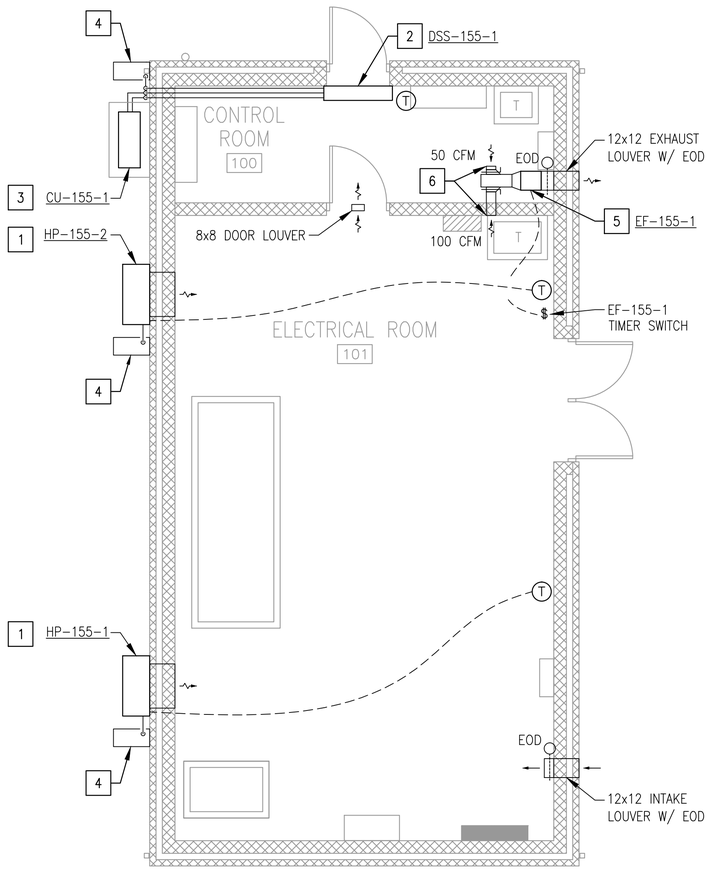

VAULT 155 MECHANICAL PLAN (1)

SCALE: 1/4" = 1'-0" M-401

GENERAL SHEET NOTES:

1. REFER TO DRAWING M-001 FOR LEGEND, ABBREVIATIONS, AND NOTES.
2. REFER TO ARCHITECTURAL, CIVIL, STRUCTURAL, AND ELECTRICAL DRAWINGS FOR ADDITIONAL WORK.
3. REFER TO DRAWING ED-402 FOR ASSOCIATED DEMOLITION WORK IN THIS VAULT.
4. THE CONTRACTOR SHALL VERIFY ALL DIMENSIONS AND EXISTING CONDITIONS IN THE FIELD. SHOULD CONDITIONS BE DISCOVERED THAT PREVENT EXECUTION OF WORK AS INDICATED ON DRAWING, THE CONTRACTOR SHALL IMMEDIATELY NOTIFY THE ENGINEER IN WRITING AND AWAIT DIRECTION BEFORE PROCEEDING WITH THE WORK.
5. DAMAGE TO EXISTING FACILITIES AND EQUIPMENT SHALL BE REPAIRED OR REPLACED IMMEDIATELY BY THE CONTRACTOR AT NO ADDITIONAL COST TO THE OWNER.
6. REPAIR AND PATCH ANY DISTURBED AREAS TO MATCH EXISTING CONDITIONS.
7. PIPING ON THIS SHEET IS INTENDED TO BE DIAGRAMMATIC. COORDINATE WITH FIELD CONDITIONS FOR EXACT PIPE ROUTING. SEE MECHANICAL DETAILS ON DRAWING M-501 FOR CONNECTION DETAILS.
8. PIPING SHALL NOT BE INSTALLED ABOVE ELECTRICAL EQUIPMENT. SEE DRAWING E-402 FOR EQUIPMENT LOCATIONS.
9. REFER TO EQUIPMENT SCHEDULES ON DRAWING M-601 FOR MORE INFORMATION.
10. DOOR LOUVERS SHALL BE PROVIDED BY ARCHITECTURAL.

CONSTRUCTION KEYNOTES:

1. PROVIDE WALL-MOUNTED PACKAGED HEAT PUMP UNIT. INSTALL 3 FEET ABOVE GRADE ON CONCRETE PEDESTAL. COORDINATE WITH STRUCTURAL DRAWINGS. SEE DETAIL 6 ON DRAWING M-501 AND SCHEDULE ON DRAWING M-601 FOR ADDITIONAL INFORMATION.
2. PROVIDE DUCTLESS HEAT PUMP SPLIT SYSTEM WITH PIPING AND CONTROLS. REFER TO DETAIL 1 ON DRAWING M-501 AND SCHEDULE ON DRAWING M-601 FOR ADDITIONAL INFORMATION.
3. INSTALL WALL-MOUNTED CONDENSING UNIT OUTDOORS. REFER TO MECHANICAL DETAIL 2 ON DRAWING M-501 FOR ADDITIONAL INFORMATION.
4. PROVIDE SPLASH BLOCK AT GRADE FOR CONDENSATE PIPING. PIPING SHALL BE LINE SIZE OF EQUIPMENT OUTLET OR MINIMUM 1". COORDINATE SPLASH BLOCK WITH ARCHITECT. COORDINATE PIPE ROUTING WITH ELECTRICAL EQUIPMENT.
5. SUPPORT EXHAUST FAN FROM STRUCTURE ABOVE. COORDINATE EXHAUST FAN HEIGHT WITH ARCHITECTURAL LOUVER HEIGHT. FAN SHALL BE CONTROLLED BY WALL-MOUNTED TIMER SWITCH.
6. PROVIDE WITH 6x6 GRILLE. BOTTOM OF GRILLE MIN. 9'-4" ABOVE FINISHED FLOOR. BALANCE TO 75 CFM.

KEY MAP

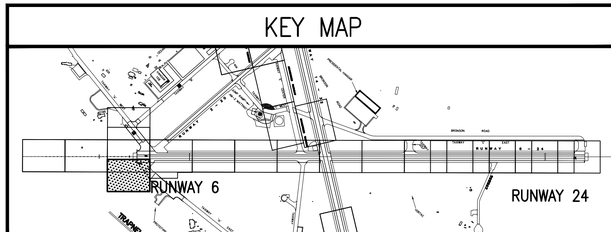

GRAPHIC SCALE

1/4"=1'-0"

1' 0 2' 4' 8'

SYM	DESCRIPTION	DATE	APPR

NAVFAC

Professional Certification
I HEREBY CERTIFY THAT THESE DOCUMENTS WERE PREPARED OR APPROVED BY ME, AND THAT I AM A DULY LICENSED PROFESSIONAL ENGINEER UNDER THE LAWS OF THE STATE OF MARYLAND, LICENSE NO. 15468, EXPIRATION DATE: 07/17/17. SEAL

JOHNSON, MIRMIRAN & THOMPSON
Gannett Fleming
A Joint Venture
272 Bendix Road, Suite 260
Virginia Beach, Virginia, 23452
Telephone: (757) 499-1895
Web: www.jmt.com
A/E INFO

APPROVED
FOR COMMANDER NAVFAC
ACTIVITY
JAMES FLETCHER PER CHECKLIST
SATISFACTORY TO DATE 9/27/2016
DES. KC DRW KC CHK MJG
FM/DM RH
BRANCH MANAGER
CHIEF ENG/ARCH E. GALLAHER, PE

DEPARTMENT OF THE NAVY
NAVFAC WASHINGTON
NAVAL FACILITIES ENGINEERING COMMAND
WASHINGTON, D.C.
PT BLUE
NAVAL AIR STATION PATUXENT RIVER
PATUXENT RIVER, MARYLAND
FY16 SPECIAL PROJECT RM12-2137
REPAIR RUNWAYS 14-32 & 6-24 - PHASE 2
VAULT 155 - MECHANICAL PLAN

SCALE: 1/4" = 1'-0"
EPROJECT NO.: 1382137
CONSTR. CONTR. NO. N40080-17-R-0002
NAVFAC DRAWING NO. 13079950
SHEET 92 OF 191
M-401
DRAWFORM REVISION: 10 MARCH 2009

FILE NAME: H:\59467 Pax River\Mechanical\Planset\10-0863-009-M-401 155.dwg LAYOUT NAME: M-401 PLOTTED: Monday, September 26, 2016 - 11:43am USER: jhodgson

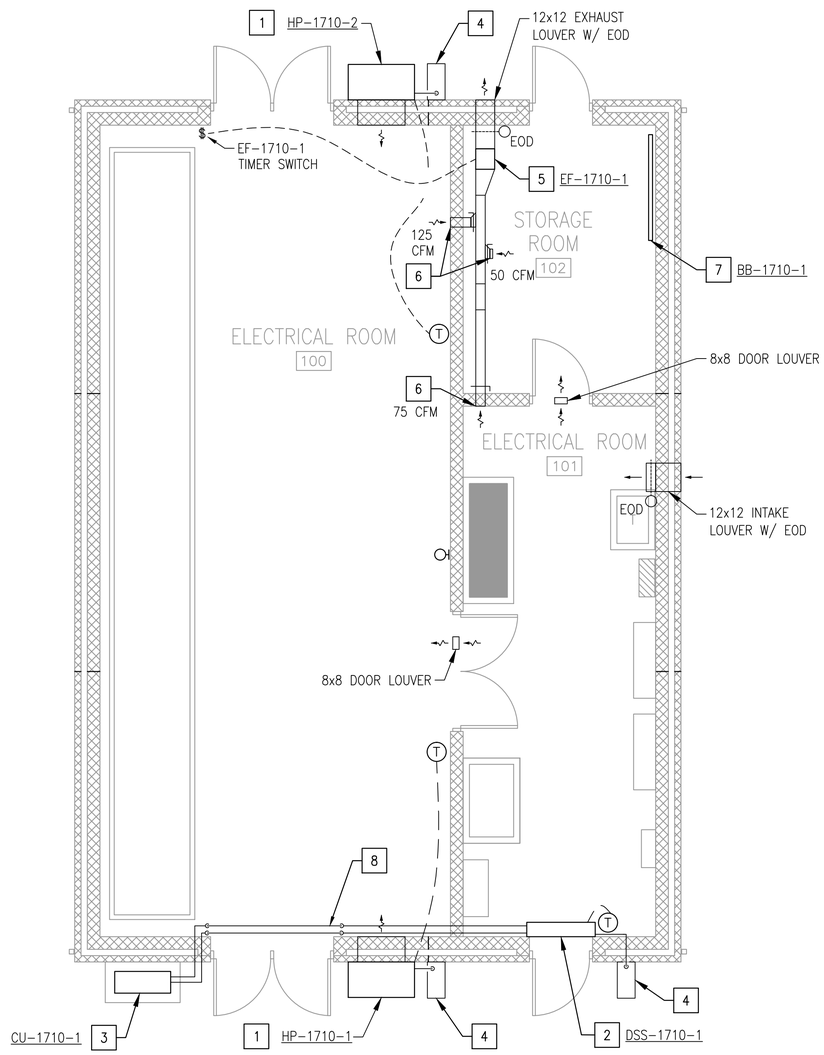

VAULT 1710 MECHANICAL PLAN (1)

SCALE: 1/4" = 1'-0" M-402

GENERAL SHEET NOTES:

1. REFER TO DRAWING M-001 FOR LEGEND, ABBREVIATIONS, AND NOTES.
2. REFER TO ARCHITECTURAL, CIVIL, STRUCTURAL, AND ELECTRICAL DRAWINGS FOR ADDITIONAL WORK.
3. REFER TO DRAWING ED-402 FOR ASSOCIATED DEMOLITION WORK IN THIS VAULT.
4. THE CONTRACTOR SHALL VERIFY ALL DIMENSIONS AND EXISTING CONDITIONS IN THE FIELD. SHOULD CONDITIONS BE DISCOVERED THAT PREVENT EXECUTION OF WORK AS INDICATED ON DRAWING, THE CONTRACTOR SHALL IMMEDIATELY NOTIFY THE ENGINEER IN WRITING AND AWAIT DIRECTION BEFORE PROCEEDING WITH THE WORK.
5. DAMAGE TO EXISTING FACILITIES AND EQUIPMENT SHALL BE REPAIRED OR REPLACED IMMEDIATELY BY THE CONTRACTOR AT NO ADDITIONAL COST TO THE OWNER.
6. REPAIR AND PATCH ANY DISTURBED AREAS TO MATCH EXISTING CONDITIONS.
7. PIPING ON THIS SHEET IS INTENDED TO BE DIAGRAMMATIC. COORDINATE WITH FIELD CONDITIONS FOR EXACT PIPE ROUTING. SEE MECHANICAL DETAILS ON DRAWING M-501 FOR CONNECTION DETAILS.
8. PIPING SHALL NOT BE INSTALLED ABOVE ELECTRICAL EQUIPMENT. SEE DRAWING E-402 FOR EQUIPMENT LOCATIONS.
9. REFER TO EQUIPMENT SCHEDULES ON DRAWING M-601 FOR MORE INFORMATION.
10. DOOR LOUVERS SHALL BE PROVIDED BY ARCHITECTURAL.

CONSTRUCTION KEYNOTES:

1. PROVIDE WALL-MOUNTED PACKAGED HEAT PUMP UNIT. INSTALL 3 FEET ABOVE GRADE ON CONCRETE PEDESTAL. COORDINATE WITH STRUCTURAL DRAWINGS. SEE DETAIL 6 ON DRAWING M-501 AND SCHEDULE ON DRAWING M-601 FOR ADDITIONAL INFORMATION.
2. PROVIDE DUCTLESS HEAT PUMP SPLIT SYSTEM WITH PIPING AND CONTROLS. REFER TO DETAIL 1 ON DRAWING M-501 AND SCHEDULE ON DRAWING M-601 FOR ADDITIONAL INFORMATION.
3. INSTALL WALL-MOUNTED CONDENSING UNIT OUTDOORS. REFER TO MECHANICAL DETAIL 2 ON DRAWING M-501 FOR ADDITIONAL INFORMATION.
4. PROVIDE SPLASH BLOCK AT GRADE FOR CONDENSATE PIPING. PIPING SHALL BE LINE SIZE OF EQUIPMENT OUTLET OR MINIMUM 1". COORDINATE SPLASH BLOCK WITH ARCHITECT. COORDINATE PIPE ROUTING WITH ELECTRICAL EQUIPMENT.
5. SUPPORT EXHAUST FAN FROM STRUCTURE ABOVE. COORDINATE EXHAUST FAN HEIGHT WITH ARCHITECTURAL LOUVER HEIGHT. FAN SHALL BE CONTROLLED BY WALL-MOUNTED TIMER SWITCH.
6. PROVIDE WITH 6x6 GRILLE. BOTTOM OF GRILLE MIN. 9'-4" ABOVE FINISHED FLOOR. BALANCE TO 75 CFM.
7. PROVIDE BASEBOARD HEATER WITH PEDESTAL AND SLOPED TOP. SEE SCHEDULE ON DRAWING M-601 FOR ADDITIONAL INFORMATION.
8. ROUTE REFRIGERANT PIPING ABOVE DOOR FRAME. COORDINATE WITH OTHER DISCIPLINES.

KEY MAP

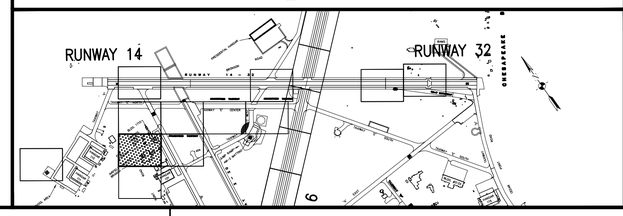

GRAPHIC SCALE

1/4"=1'-0"

1' 0 2' 4' 8'

SYM	DESCRIPTION	DATE	APPR

NAVFAC

Professional Certification
I HEREBY CERTIFY THAT THESE DOCUMENTS WERE PREPARED OR APPROVED BY ME, AND THAT I AM A DULY LICENSED PROFESSIONAL ENGINEER UNDER THE LAWS OF THE STATE OF MARYLAND, LICENSE NO. 15468, EXPIRATION DATE: 07/17/17.
SEAL

JOHNSON, MIRMIRAN & THOMPSON
Gannett Fleming
A Joint Venture
272 Bendix Road, Suite 260
Virginia Beach, Virginia, 23452
Telephone: (757) 499-1895
Web: www.jmt.com
A/E INFO

APPROVED
FOR COMMANDER NAVFAC
ACTIVITY
JAMES FLETCHER PER CHECKLIST
SATISFACTORY TO DATE 9/27/2016
DES KC DRW KC CHK MJG
PM/DM RH
BRANCH MANAGER
CHIEF ENG/ARCH E. GALLAHER, PE

DEPARTMENT OF THE NAVY
BPT BLUE
NAVAL FACILITIES ENGINEERING COMMAND
NAVFAC WASHINGTON
WASHINGTON, D.C.
NAVAL AIR STATION PATUXENT RIVER
PATUXENT RIVER, MARYLAND
FY16 SPECIAL PROJECT RM12-2137
REPAIR RUNWAYS 14-32 & 6-24 - PHASE 2
VAULT 1710 - MECHANICAL PLAN

SCALE: 1/4" = 1'-0"
EPROJECT NO.: 1382137
CONSTR. CONTR. NO. N40080-17-R-0002
NAVFAC DRAWING NO. 13079951
SHEET 93 OF 191
M-402
DRAWFORM REVISION: 10 MARCH 2009

FILE NAME: H:\59487 Pax River\Mechanical\Planset\10-0863-009-M-402 1710.dwg LAYOUT NAME: M-402 PLOTTED: Monday, September 26, 2016 - 11:44am USER: jhodgson

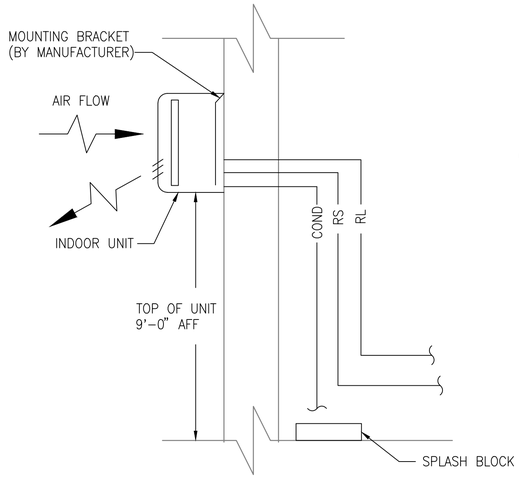

1. SEE MANUFACTURER'S INSTALLATION INSTRUCTIONS FOR MOUNTING AND REFRIGERANT PIPING DETAILS
2. REFER TO THIS SHEET FOR REFRIGERANT PIPE ROUTING.
3. PROVIDE CLEAN OUT CONNECTION AT INDOOR UNIT AND ELBOWS IN CONDENSATE POOL.

HEAT PUMP INDOOR UNIT DETAIL (1)
NTS

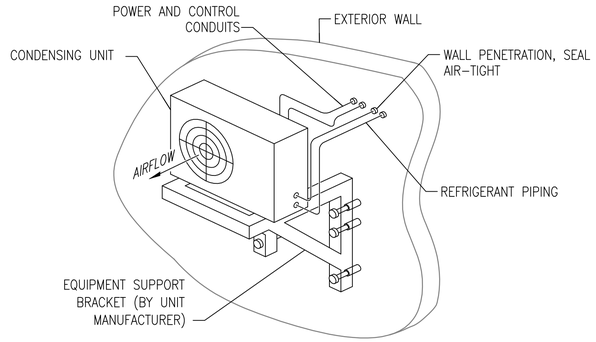

1. MOUNT UNIT 6" MINIMUM FROM MOUNTING WALL.
2. MOUNT TO WALL TO PROVIDE 3 FEET OF CLEARANCE FROM GRADE TO BOTTOM OF UNIT.
3. REFER TO MECHANICAL PLANS FOR GENERAL REFRIGERANT PIPE ROUTING.
4. PIPING SHALL BE INSULATED. SEE SPECIFICATIONS FOR MORE INFORMATION.

HEAT PUMP OUTDOOR UNIT DETAIL (2)
NTS

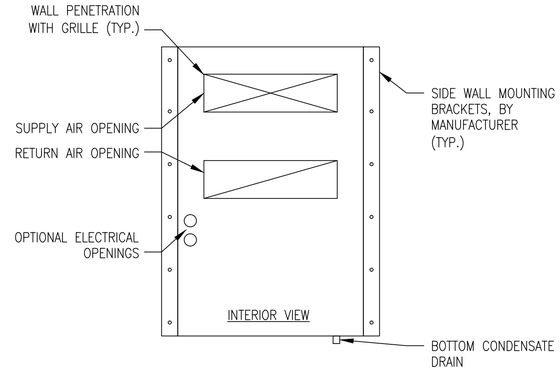

1. SEE MANUFACTURER'S INSTALLATION INSTRUCTIONS FOR ADDITIONAL INFORMATION.
2. COORDINATE INSTALLATION AND WALL OPENING WITH ARCHITECTURAL AND STRUCTURAL.
3. WEIGHT OF UNIT SHALL BE CARRIED BY 3-FOOT TALL CONCRETE PEDESTAL. SET UNIT ON CONCRETE PEDESTAL PRIOR TO FASTENING TO WALL. BOTTOM INSTALLATION BRACKET NOT REQUIRED.

PACKAGED HEAT PUMP MOUNTING DETAIL (3)
NTS

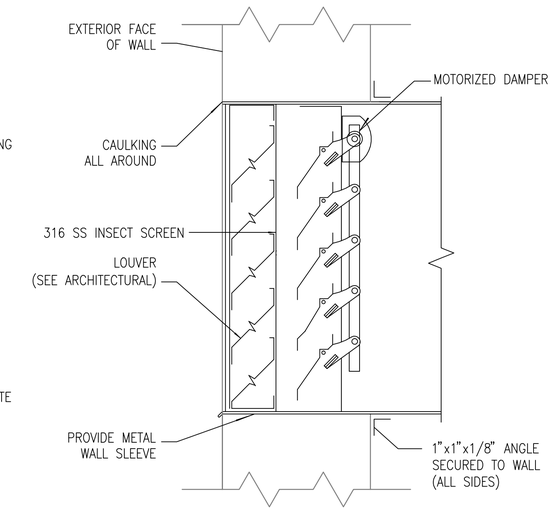

1. INTAKE LOUVERS SHALL BE PROVIDED AS STORM PROOF TYPE.

INTAKE/EXHAUST LOUVER DETAIL (4)
NTS

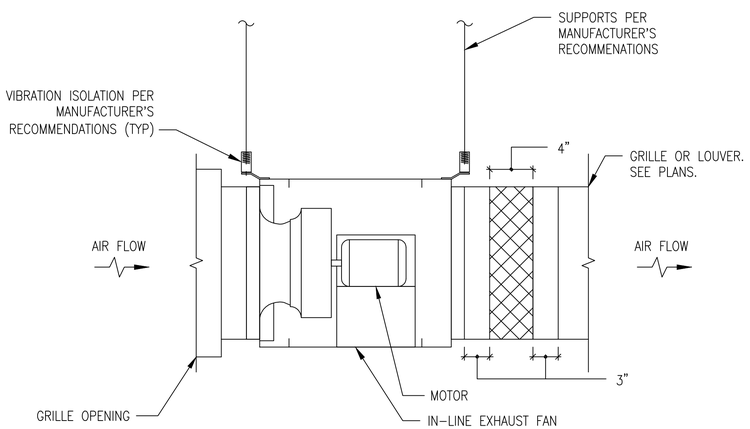

IN-LINE EXHAUST FAN DETAIL (5)
NTS

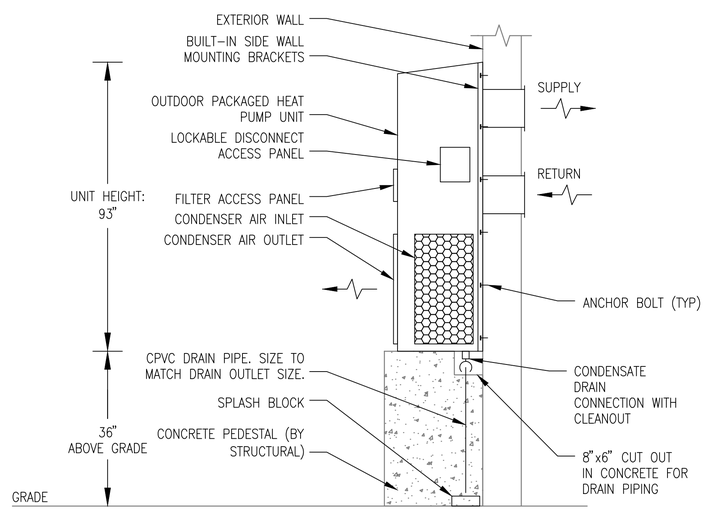

1. SEE MANUFACTURER'S INSTALLATION INSTRUCTIONS FOR ADDITIONAL INFORMATION.
2. COORDINATE INSTALLATION AND WALL OPENING WITH ARCHITECTURAL AND STRUCTURAL.
3. WEIGHT OF UNIT SHALL BE CARRIED BY 3-FOOT TALL CONCRETE PEDESTAL. SET UNIT ON CONCRETE PEDESTAL PRIOR TO FASTENING TO WALL.

PACKAGED HEAT PUMP DETAIL (6)
NTS

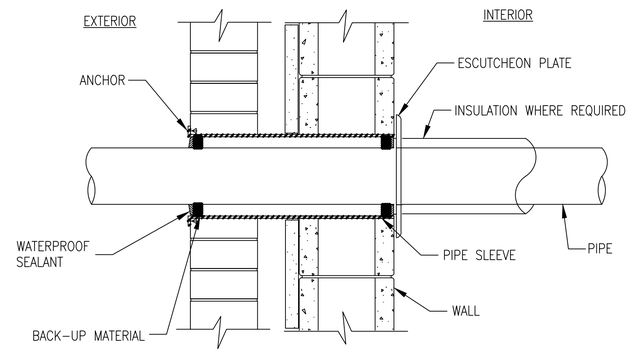

1. PROVIDE ESCUTCHEON PLATE ON BOTH SIDES OF INTERIOR WALL PIPE PENETRATION.
2. SET SLEEVE IN WALL AND ANCHOR DURING WALL CONSTRUCTION.

THRU WALL PIPE PENETRATION DETAIL (7)
NTS

SYM	DESCRIPTION	DATE	APPR

NAVFAC

STATE OF MARYLAND MATTHEW GRACE LICENSED PROFESSIONAL ENGINEER NO. 15486

Professional Certification
I HEREBY CERTIFY THAT THESE DOCUMENTS WERE PREPARED OR APPROVED BY ME, AND THAT I AM A DULY LICENSED PROFESSIONAL ENGINEER UNDER THE LAWS OF THE STATE OF MARYLAND, LICENSE NO. 15486, EXPIRATION DATE: 07/17/17.
SEAL

JOHNSON, MIRMIRAN & THOMPSON
Gannett Fleming
A Joint Venture
272 Bendix Road, Suite 260
Virginia Beach, Virginia, 23452
Telephone: (757) 499-1895
Web: www.jmt.com

A/E INFO

APPROVED

FOR COMMANDER NAVFAC

ACTIVITY

JAMES FLETCHER PER CHECKLIST
SATISFACTORY TO DATE 9/27/2016
DES KC DRW KC CHK MJG
PM/DM RH
BRANCH MANAGER
CHIEF ENG/ARCH E. GALLAHER, PE

DEPARTMENT OF THE NAVY
NAVAL FACILITIES ENGINEERING COMMAND
WASHINGTON, D.C.
NAVFAC WASHINGTON
IPT BLUE
NAVAL AIR STATION PATUXENT RIVER
PATUXENT RIVER, MARYLAND
FY16 SPECIAL PROJECT RM12-2137
REPAIR RUNWAYS 14-32 & 6-24 - PHASE 2
MECHANICAL DETAILS

SCALE: NOT TO SCALE
EPROJECT NO.: 1382137
CONSTR. CONTR. NO. N40080-17-R-0002
NAVFAC DRAWING NO. 13079952
SHEET 94 OF 191
M-501

DRAWFORM REVISION: 10 MARCH 2009

FILE NAME: H:\59487 Pax River\Mechanical\Planset\10-0863-009-M-501.dwg LAYOUT NAME: M-501 PLOTTED: Monday, September 26, 2016 - 11:44am USER: jhodgson

SPLIT SYSTEM AIR-TO-AIR HEAT PUMP SCHEDULE

MARK	INDOOR UNIT										OUTDOOR UNIT											REMARKS
	FAN DATA				COIL PERFORMANCE																	
			ELECTRICAL		COOLING			HEATING							ELECTRICAL					MIN. SYSTEM EFFICIENCY		
	TOTAL CFM	OA CFM	VOLT/PH	NEMA STARTER	TOTAL (MBH)	SENS. (MBH)	EAT (°FDB/°FWB)	DESIGN (MBH)	SUPP. HTG (KW)	EAT (°FDB)	NOMINAL TONS	NO. COMPRESSORS	STAGES	REFRIGERANT TYPE	VOLTS/PH	MCA	MOCP	FLA	C.O.P.	SEER	HSPF	
DSS-155-1 / CU-155-1	635	0	208/1	4X	24.0	18.0	80	27.0	0	55	2.0	1	INVERTER	R-410A	208/1	16.5	20	10.3	2.2	17.6	9.1	1, 2, 3, 5, 6, 7
DSS-1710-1 / CU-1710-1	635	0	208/1	4X	24.0	18.0	80	27.0	0	55	2.0	1	INVERTER	R-410A	208/1	16.5	20	10.3	2.2	17.6	9.1	1, 2, 3, 5, 6, 7

NOTES:
1. MINIMUM SEER/HSPF SHALL BE NO LESS THAN THE RECOMMENDED EFFICIENCY LISTED BY ENERGY STAR AND FEDERAL ENERGY MANAGEMENT PROGRAM (FEMP) FOR THE EQUIPMENT LISTED. SEE WWW.EREN.DOE.GOV/FEMP/PROCUREMENT FOR REQUIREMENTS.
2. PROVIDE THERMOSTAT WITH LOCKABLE ENCLOSURE.
3. SYSTEM SHALL BE CONTROLLED BY INTEGRAL AUTOMATIC CONTROLS VIA WALL-MOUNTED WIRED CONTROLLER.
4. INSTALL INDOOR UNIT TO PROVIDE 9'-0" OF CLEARANCE FROM BOTTOM OF UNIT.
5. REFRIGERANT PIPING SHALL BE INSULATED.
6. PROVIDE MANUFACTURER'S REQUIRED EQUIPMENT CLEARANCES FOR UNITS.
7. PROVIDE OUTDOOR UNIT WITH MANUFACTURER WALL-MOUNTING BRACKET.

AIR-COOLED PACKAGED TERMINAL HEAT PUMP SCHEDULE

MARK	FAN DATA		COOLING			HEATING			ELECTRICAL				C.O.P.	MIN. SYSTEM EFFICIENCY	REFRIGERANT TYPE	REMARKS
	TOTAL CFM	OA CFM	TOTAL (MBH)	SENS. (MBH)	EAT (°FDB/°FWB)	DESIGN (MBH)	SUPP. HTG (KW)	EAT (°FDB)	VOLTS/PH	MCA	MOCP	FLA		EER		
HP-155-1	900	0	28.0	26.0	80	16.5	0	55	480/3	10	15	7.2	2.2	11.0	R-410A	1, 2, 3, 4, 5, 6
HP-155-2	900	0	28.0	26.0	80	16.5	0	55	480/3	10	15	7.2	2.2	11.0	R-410A	1, 2, 3, 4, 5, 6
HP-1710-1	1,650	0	57.5	56.2	80	32.0	0	55	480/3	16	20	15.6	2.2	10.7	R-410A	1, 2, 3, 4, 5, 6
HP-1710-2	1,650	0	57.5	56.2	80	32.0	0	55	480/3	16	20	15.6	2.2	10.7	R-410A	1, 2, 3, 4, 5, 6

NOTES:
1. MINIMUM SEER/HSPF SHALL BE NO LESS THAN THE RECOMMENDED EFFICIENCY LISTED BY ENERGY STAR AND FEDERAL ENERGY MANAGEMENT PROGRAM (FEMP) FOR THE EQUIPMENT LISTED. SEE WWW.EREN.DOE.GOV/FEMP/PROCUREMENT FOR REQUIREMENTS.
2. PROVIDE THERMOSTAT ON INSULATED BOARD, AND WITH LOCKABLE ENCLOSURE.
3. SYSTEM SHALL BE CONTROLLED BY INTEGRAL AUTOMATIC CONTROLS VIA WALL-MOUNTED WIRED CONTROLLER.
4. PROVIDE MANUFACTURER'S REQUIRED EQUIPMENT CLEARANCES FOR UNITS.
5. INSTALL OUTDOOR UNIT ON 3-FOOT TALL CONCRETE PEDESTAL. SEE DETAIL ON DRAWING S-502 FOR ADDITIONAL INFORMATION.
6. PROVIDE UNIT WITH VARIABLE SPEED BLOWER MOTOR AND STAINLESS STEEL CABINET.

EXHAUST FAN SCHEDULE

MARK	AIRFLOW CFM	ESP (IN W.G.)	MOTOR DATA			NEMA STARTER	DRIVE TYPE	CONFIGURATION	DAMPER			LOCATION	REMARKS
			HP	RPM	VOLT/PH				TYPE	SIZE	PD (IN W.G.)		
EF-155-1	150	0.3	1/6	1725	115/1	4X	DIRECT	IN-LINE	EOD	12"x12"	0.02	VAULT 155	1
EF-1710-1	225	0.3	1/6	1725	115/1	4X	DIRECT	IN-LINE	EOD	12"x12"	0.02	VAULT 1710	1

NOTES: 1. PROVIDE WALL-MOUNTED TIMER SWITCH FOR FAN CONTROL.

ELECTRIC BASEBOARD HEATER SCHEDULE

MARK	KW	W/FT, AVG	LENGTH (FT)	ELECTRICAL DATA		LOCATION	REMARKS
				AMPS	VOLT/PH		
BB-1710-1	1.50	275	67.2	7.2	208/1	VAULT 1710	1

NOTES: 1. PROVIDE WITH BOTTOM INLET OPTION WITH 5" HIGH PEDESTAL ACCESSORY.

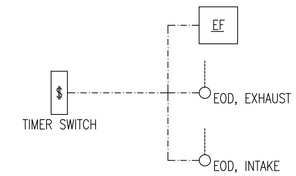

1. EXHAUST FANS

EXHAUST FANS SHALL PROVIDE NORMAL VENTILATION WHEN THE SPACE IS OCCUPIED AND SHALL ENERGIZE AND DE-ENERGIZE VIA A WALL-MOUNTED TIMER SWITCH. FANS SHALL PROVIDE VENTILATION AT A FIXED, NON-ADJUSTABLE SETTING. TIMER DURATION SHALL BE USER ADJUSTABLE.

INTAKE AND EXHAUST ELECTRIC OPERATED DAMPERS SHALL BE INTERLOCKED WITH THE ASSOCIATED EXHAUST FAN. DAMPERS SHALL OPEN WHEN THE ASSOCIATED EXHAUST FAN IS ENABLED. DAMPERS SHALL CLOSE WHEN THE ASSOCIATED EXHAUST FAN IS DISABLED. THE INTAKE AND EXHAUST DAMPERS SHALL BE PROVED OPEN THROUGH END SWITCHES PRIOR TO FAN STARTING.

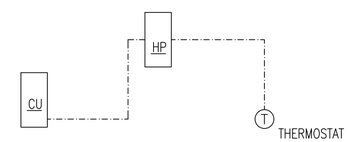

2. SPLIT SYSTEM HEAT PUMPS

EACH UNIT SHALL BE PROVIDED WITH A DEDICATED WALL-MOUNTED WIRED CONTROLLER. CONTROLS SHALL BE SET TO AUTOMATIC MODE. UNITS SHALL PROVIDE COOLING OR HEATING TO MAINTAIN AN ADJUSTABLE SPACE TEMPERATURE SETPOINT, AS DETERMINED BY THE UNIT'S CONTROLLER/THERMOSTAT.

ROOM TEMPERATURE SETPOINTS SHALL BE 80 DEG F (ADJUSTABLE) FOR COOLING AND 55 DEG F (ADJUSTABLE) FOR HEATING.

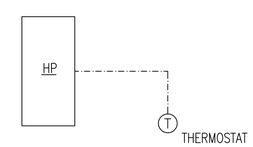

3. PACKAGED HEAT PUMPS

EACH UNIT SHALL BE PROVIDED WITH A DEDICATED WALL-MOUNTED THERMOSTAT. CONTROLS SHALL BE SET TO AUTOMATIC MODE. UNITS SHALL PROVIDE COOLING OR HEATING TO MAINTAIN AN ADJUSTABLE SPACE TEMPERATURE SETPOINT, AS DETERMINED BY THE UNIT'S CONTROLLER/THERMOSTAT.

ROOM TEMPERATURE SETPOINTS SHALL BE 80 DEG F (ADJUSTABLE) FOR COOLING AND 55 DEG F (ADJUSTABLE) FOR HEATING.

SYM	DESCRIPTION	DATE	APPR

NAVFAC

STATE OF MARYLAND — MATTHEW GRACE — No. 15486 — PROFESSIONAL ENGINEER

Professional Certification
I HEREBY CERTIFY THAT THESE DOCUMENTS WERE PREPARED OR APPROVED BY ME, AND THAT I AM A DULY LICENSED PROFESSIONAL ENGINEER UNDER THE LAWS OF THE STATE OF MARYLAND, LICENSE NO. 15486, EXPIRATION DATE: 07/17/17.
SEAL

JOHNSON, MIRMIRAN & THOMPSON
Gannett Fleming
A Joint Venture
272 Bendix Road, Suite 260
Virginia Beach, Virginia, 23452
Telephone: (757) 499-1895
Web: www.jmt.com
A/E INFO

APPROVED
FOR COMMANDER NAVFAC
ACTIVITY
JAMES FLETCHER PER CHECKLIST
SATISFACTORY TO DATE 9/27/2016
DES KC DRW KC CHK MJG
PM/DM RH
BRANCH MANAGER
CHIEF ENG/ARCH E. GALLAHER, PE

DEPARTMENT OF THE NAVY — NAVAL FACILITIES ENGINEERING COMMAND — WASHINGTON, D.C.
NAVFAC WASHINGTON
IPT BLUE
NAVAL AIR STATION PATUXENT RIVER — PATUXENT RIVER, MARYLAND
FY16 SPECIAL PROJECT RM12-2137
REPAIR RUNWAYS 14-32 & 6-24 - PHASE 2
MECHANICAL SCHEDULES

SCALE: NONE
EPROJECT NO.: 1382137
CONSTR. CONTR. NO. N40080-17-R-0002
NAVFAC DRAWING NO. 13079953
SHEET 95 OF 191
M-601
DRAWFORM REVISION: 10 MARCH 2009

FILE NAME: H:\59487 Fox River\Mechanical\Planset\10-0863-009-M-601.dwg LAYOUT NAME: M-601 PLOTTED: Monday, September 26, 2016 - 11:44am USER: jhodgson