GENERAL NOTES:

1. STRUCTURAL DESIGN COMPLIES WITH THE REQUIREMENTS OF:

   A. 2012 INTERNATIONAL BUILDING CODE.

   B. UFC 1-200-01, GENERAL BUILDING REQUIREMENTS, 1 JULY 2013, WITH CHANGE 1, 1 SEPTEMBER 2013).

   C. UFC 3-301-01, STRUCTURAL ENGINEERING, 1 JUNE 2013, WITH CHANGE 1, 15 MAY 2014.)

2. ALL DIMENSIONS, ELEVATIONS AND CONDITIONS SHALL BE VERIFIED IN THE FIELD. ANY DISCREPANCIES SHALL BE BROUGHT TO THE ATTENTION OF THE CONTRACTING OFFICER BEFORE ORDERING MATERIALS AND PROCEEDING WITH THE AFFECTED PART OF THE WORK.

3. THE EXACT SIZE & LOCATION OF ALL EXISTING UTILITIES SHALL BE FIELD VERIFIED BY THE CONTRACTOR PRIOR TO START OF CONSTRUCTION. CONTRACTOR SHALL TAKE CARE TO PROTECT UTILITIES IN THE WORK AREA. ALL CONSTRUCTION SHALL BE COORDINATED WITH THE CONTRACTING OFFICE.

4. IT IS THE CONTRACTOR'S SOLE RESPONSIBILITY TO DETERMINE ERECTION PROCEDURES AND SEQUENCE TO ENSURE THE SAFETY OF THE FACILITIES AND THEIR COMPONENTS DURING DEMOLITION AND ERECTION UNLESS OTHERWISE DIRECTED. THIS INCLUDES THE ADDITION OF NECESSARY SHORING, SHEETING, TEMPORARY BRACING, GUYS OR TIE-DOWNS. SUCH MATERIAL SHALL REMAIN THE PROPERTY OF THE CONTRACTOR AFTER THE COMPLETION OF THE PROJECTS.

5. METHODS OF DEMOLITION, CONSTRUCTION, AND ERECTION ARE THE CONTRACTOR'S RESPONSIBILITY UNLESS OTHERWISE SPECIFIED.

6. SPECIAL ATTENTION MUST BE PAID TO ANY/ALL CONCRETE WORK IN/AROUND DRY DOCKS. CONTROLS MUST BE PROVIDED TO ENSURE THAT CONCRETE MATERIAL (I.E., CONCRETE DEBRIS, DUST, CONCRETE SAWING WASTE WATER, WASH WATER, CURING WATER, AND STORM WATER IN CONTACT WITH CURING CONCRETE) DOES NOT ENTER THE CLOSED DRAINAGE SYSTEMS OF ANY SHIPYARD DRY DOCK. ALSO, ELSEWHERE ONSITE, CONCRETE MATERIAL (AS STATED ABOVE) SHOULD BE PREVENTED FROM ENTERING ANY DRAINAGE STRUCTURE OR PATH TO THE RIVER.)

7. THE CONTRACTOR SHALL NOT DEVIATE FROM THE DESIGN DRAWINGS WITHOUT WRITTEN APPROVAL OF THE CONTRACTING OFFICER.

8. SHOP DRAWINGS SHALL BE CHECKED BY THE CONTRACTOR PRIOR TO SUBMISSION FOR CONTRACTING OFFICER'S APPROVAL.

9. THE PROJECT SITE IS AN OPERATING NAVY FACILITY. THE CONTRACTOR SHALL COORDINATE WORK TO PERMIT NAVY OPERATIONS TO BE PERFORMED DURING THE COURSE OF WORK. DELAY CLAIMS DUE TO PERIODIC WORK STOPPAGES OR CHANGES IN WORK SEQUENCE BASED ON IMPACTS FROM SHIPYARD OPERATIONS WILL NOT BE ALLOWED. THE CONTRACTOR MAY NEED TO WORK WEEKENDS TO ENSURE SHIPYARD OPERATIONS ARE NOT IMPACTED.

10. ANY PAVEMENT AND PAVEMENT MARKINGS REMOVED OR DISTURBED BY THE CONSTRUCTION SHALL BE REPLACED IN-KIND.

11. UPON COMPLETION OF PROJECT WORK, CONTRACTOR SHALL CLEAN WORK AREA FREE OF EQUIPMENT, TOOLS, MATERIALS, DEBRIS AND DUST.

12. THE WALL BOARD, PAINT IN BUILDING 347 IS CONSIDERED TO CONTAIN ASBESTOS, LEAD AND MOLD WHICH ARE HAZARDOUS MATERIALS. THE CONTRACTOR SHALL PREPARE SITE SPECIFIC HEALTH AND SAFETY PLANS, ABATEMENT PLANS AND ALL APPROPRIATE CONTROLS OUTLINED IN THE PROJECT TECHNICAL SPECIFICATIONS FOR ABATEMENT, REMOVAL & DISPOSAL OF HAZARDOUS MATERIALS.

13. DESIGN CRITERIA:

   - SIDEWALK LIVE LOAD OF 250 PSF

DEMOLITION:

1. THE CONTRACTOR SHALL PROVIDE CONTROL MEASURES AS REQUIRED BY ENVIRONMENTAL REGULATIONS AND AS REQUIRED TO PREVENT DEBRIS CONTAMINANTS (SOLID, LIQUID OR DISSOLVED) FROM ENTERING THE RIVER. SEE NOTE 6, GENERAL NOTES.

2. ALL MATERIAL DEMOLISHED AND NOT REUSED OR SALVAGED TO THE GOVERNMENT SHALL BECOME THE PROPERTY OF THE CONTRACTOR AND SHALL BE REMOVED DAILY FROM THE GOVERNMENTS PROPERTY. REMOVED MATERIAL SHALL BE DISPOSED OF IN ACCORDANCE WITH ALL LOCAL, STATE AND FEDERAL LAWS.

3. THE CONTRACTOR IS RESPONSIBLE FOR REMOVAL OF ALL DEBRIS RESULTING FROM DEMOLITION WORK.

CONCRETE NOTES:

1. ALL CONCRETE CONSTRUCTION SHALL BE IN CONFORMANCE WITH AMERICAN CONCRETE INSTITUTE BUILDING CODE, ACI 318, LATEST EDITION.

2. ALL CONCRETE SHALL BE NORMAL WEIGHT HAVING A MINIMUM COMPRESSIVE STRENGTH AT 28 DAYS OF4000 PSI UNLESS NOTED OTHERWISE.

   A. PORTLAND CEMENT SHALL CONFORM TO ASTM C 150 TYPE II.
   B. AGGREGATE SHALL CONFORM TO ASTM C33, 3/4" MAXIMUM SIZE.
   C. WATER SHALL CONFORM TO ASTM C 94 AND SHALL BE POTABLE.
   D. MAXIMUM WATER CEMENT RATIO SHALL BE 0.45.
   E. MAXIMUM SLUMP SHALL BE 4".
   F. AIR ENTRAINING AGENT SHALL CONFORM TO ASTM C 260 WITH 4-6% TOTAL AIR.

3. REINFORCING STEEL SHALL BE ASTM A615 GRADE 60. ALL DETAILS SHALL BE IN ACCORDANCE WITH ACI DETAIL STANDARD ACI 315.

4. WELDED WIRE FABRIC SHALL CONFORM TO ASTM A185 SPECIFICATIONS AND PLACED IN ACCORDANCE WITH THE WELDED STEEL WIRE INSTITUTE.

5. REINFORCING STEEL SHALL HAVE A MINIMUM CLEAR CONCRETE COVER OF 3" PER COVER REQUIREMENTS FOR PERMANENT INSTALLATIONS IN SALT WATER. REF: UFC 4-151-140, 10 SEPT. 2001, WITH CHANGE 1, 1 SEPT. 2012.

6. ALL EXPOSED CONCRETE EDGES SHALL HAVE 3/4" CHAMFER.

7. ALL LAP SPLICES FOR CONTINUOUS REINFORCING, NOT SHOWN ON DRAWINGS, SHALL BE IN ACCORDANCE WITH ACI 318.

8. FOR PENETRATIONS GREATER THAN 10" THROUGH CONCRETE WALLS AND SLABS, PROVIDE ADDITIONAL DIAGONAL REINFORCING BARS AROUND THE OPENING AT EACH FACE EQUAL IN SIZE TO THE MAIN REINFORCING. DIAGONAL BARS SHALL OVERLAP A MINIMUM OF 1'-6".

9. HOT WEATHER CONCRETE INSTALLATION SHALL BE PERFORMED IN ACCORDANCE WITH ACI 305. COLD WEATHER CONCRETE INSTALLATION SHALL BE PERFORMED IN ACCORDANCE WITH ACI 306.

10. CURING:

   A. HORIZONTAL SURFACES SHALL BE KEPT CONTINUOUSLY MOIST FOR A MINIMUM OF SEVEN DAYS.

   B. VERTICAL SURFACES SHALL RECEIVE TWO COATS (ONE AT TIME OF STRIPPING AND ANOTHER THREE DAYS LATER) OF AN APPROVED NON-TOXIC CURING COMPOUND. FORMS SHALL REMAIN IN-PLACE THROUGH INITIAL CURE.

11. SURFACE PATCHING MATERIAL SHALL BE ONE-COMPONENT CEMENTITIOUS, EARLY STRENGTH, SHRINKAGE COMPENSATED HAND TROWEL APPLIED MORTAR.

12. PRIOR TO CONCRETE PATCHING AND REPAIR, CLEAN AND COAT ALL EXPOSED EXISTING REINFORCING STEEL WITH A PROTECTIVE COATING/BONDING AGENT. REINFORCEMENT EXHIBITING SECTION LOSS OF 20% OR GREATER DUE TO CORROSION SHALL BE REPLACED OR SUPPLEMENTED WITH NEW SECTION OF REBAR MATCHING THE EXISTING BAR SIZE. PROVIDE 12" MINIMUM SPLICE LENGTH.

STEEL NOTES:

1. STEEL DESIGN AND CONSTRUCTION SHALL BE IN ACCORDANCE WITH "STEEL CONSTRUCTION MANUAL" AMERICAN INSTITUTE OF STEEL CONSTRUCTION (AISC) - 13th EDITION.

2. STRUCTURAL STEEL W-SHAPES SHALL CONFORM TO ASTM A992, MINIMUM YIELD STRENGTH fy=50 KSI.

3. HOLLOW STRUCTURAL SECTIONS SHALL CONFORM TO ASTM A500, GRADE B, MINIMUM YIELD STRENGTH fy=46 KSI.

4. STRUCTURAL STEEL MISCELLANEOUS SECTIONS, INCLUDING BUT NOT LIMITED TO CHANNELS, ANGLES AND PLATES SHALL CONFORM TO ASTM A36, MINIMUM YIELD STRENGTH fy=36 KSI.

5. WELDING SHALL CONFORM TO THE AMERICAN WELDING SOCIETY (AWS) STRUCTURAL WELDING CODE, D1.1, LATEST EDITION. ELECTRODE: E70.

6. CONNECTIONS SHALL BE AS NOTED ON CONTRACT DRAWINGS.

7. NO FIELD CUTTING, BURNING, OR OTHER ALTERATION OF NEW STRUCTURAL STEEL SHALL BE DONE WITHOUT WRITTEN APPROVAL OF THE ENGINEER.

STEEL COATING NOTES

1. ALL NEW STEEL SHALL BE HOT-DIP GALVANIZED AFTER FABRICATION AND IN ACCORDANCE WITH ASTM A123.

2. ALL EXISTING STEEL BEAMS, PUMP SUPPORTS, PIPE & TANK SUPPORTS IN BOTH BUILDINGS SHALL BE CLEANED AND COATED PER ASTM A780. SURFACE PREPARATION SHALL BE A MINIMUM OF SSPC-SP3. COAT USING ONE OF THE FOLLOWING:

   A. DIMETCOTE 9 - AMERON INTERNATIONAL
   B. CARBO ZINC 11 - CARBOLINE COMPANY
   C. CATHA-COAT 304 VICI-DEVOE
   D. APPROVED EQUAL

WALL PAINT REPAIR NOTES

1. EXISTING CONCRETE WALLS AND CEILING IN BUILDING 347 THAT,

   A. CONTAIN LEAD PAINT - SHALL BE CLEANED PER SPECIFICATION 02 83 13.00 22.

   B. CONTAIN MOLD - SHALL BE CLEANED WITH A SOLUTION COMPOSED OF 1/2 CUP TRISODIUM PHOSPHATE, 1/4 CUP HOUSEHOLD DETERGENT, 1 QUART 5 PERCENT SODIUM HYPOCHLORITE SOLUTION AND 3 QUARTS OF WARM WATER. RINSE THOROUGHLY WITH FRESH WATER.

2. CONCRETE WALLS & CEILINGS SHALL BE PAINTED WITH;

   A. MASTER PAINTERS INSTITUTE, MPI RIN 3.1A-G3, MPI 50 & 52 PRIMER AND TOPCOAT, FOR WALLS.

   B. MASTER PAINTERS INSTITUTE, MPI RIN 3.1C-G3, MPI 151 PRIMER AND TOPCOAT, FOR CEILINGS.

ABBREVIATIONS:

@	AT
APPROX	APPROXIMATELY
BLDG	BUILDING
BM	BEAM
BOT	BOTTOM
CA	COMPRESSED AIR
CJ	CONSTRUCTION JOINT
CONC	CONCRETE
CONT	CONTINUOUS
DIA	DIAMETER
DIMS	DIMENSIONS
DP	DEEP
DWG	DRAWING
DWGS	DRAWINGS
EA	EACH
EF	EACH FACE
EJ	EXPANSION JOINT
EL	ELEVATION
EMBED	EMBEDMENT
EQ	EQUAL
EW	EACH WAY
EXT	EXTERIOR
FFL	FINISHED FLOOR ELEVATION
FIN	FINISHED
FRP	FIBER REINFORCED POLYMER
FT	FOOT/FEET
GALV	GALVANIZED
HOR	HORIZONTAL
HSS	HOLLOW STRUCTURAL SECTION
ID	INSIDE DIAMETER
INT	INTERIOR
JT	JOINT
LOC	LOCATION
MANUF	MANUFACTURER
MAX	MAXIMUM
MIN	MINIMUM
N/A	NOT APPLICABLE
NO, #	NUMBER
OC	ON CENTER
OD	OUTSIDE DIAMETER
OPNG	OPENING
PL	PLATE
REINF	REINFORCEMENT
REQ'D	REQUIRED
SCHED	SCHEDULE
SECT	SECTION
SQ	SQUARE
SS	STAINLESS STEEL
T&B	TOP AND BOTTOM
THK	THICK
T.O.	TOP OF
TYP	TYPICAL
U.N.O.	UNLESS NOTED OTHERWISE
VERT	VERTICAL
VIF	VERIFY IN FIELD
W/	WITH

SYM	DESCRIPTION	DATE	APPR

NAVFAC

COMMONWEALTH OF MASSACHUSETTS
ROBERT G. NJOROGE
CIVIL
No. 49642
REGISTERED PROFESSIONAL ENGINEER
SEAL

ENGINEERS
FST
Since 1914
FAY, SPOFFORD & THORNDIKE
5 BURLINGTON WOODS
BURLINGTON, MA 01803
A/E INFO

APPROVED
FOR COMMANDER NAVFAC
ACTIVITY
SATISFACTORY TO DATE
DES RGN | DRW RGN | CHK VMG
PWD-ME DM/POC P. STOCKLESS
BRANCH MANAGER
CHIEF ENG/ARCH
FIRE PROTECTION

DEPARTMENT OF THE NAVY
NAVAL FACILITIES ENGINEERING COMMAND
PUBLIC WORKS DEPARTMENT - MAINE
NAVAL FACILITIES ENGINEERING COMMAND ~ MID-ATLANTIC
NAVAL SHIPYARD - PORTSMOUTH, NH
PORTSMOUTH NAVAL SHIPYARD
KITTERY, MAINE
REPLACE CONDENSATE PUMP STATIONS
BUILDINGS 22 & 347
LEGEND, ABBREVIATIONS AND GENERAL NOTES

MAXIMO No.: 7725935
EPROJECT NO.: 1331739
CONSTR. CONTR. NO.
NAVFAC DRAWING NO. 12680391
SHEET 4 OF 26
S-001 | MS-14-1245

DRAWFORM REVISION: 10 MARCH 2009

FILE NAME: U:\bq-207aa - steam\CADD\Buildings\03_Structural\BQ-207AA-S-001.dwg LAYOUT NAME: S-001 PLOTTED: Wednesday, August 06, 2014 - 8:03am USER: Worsek_V

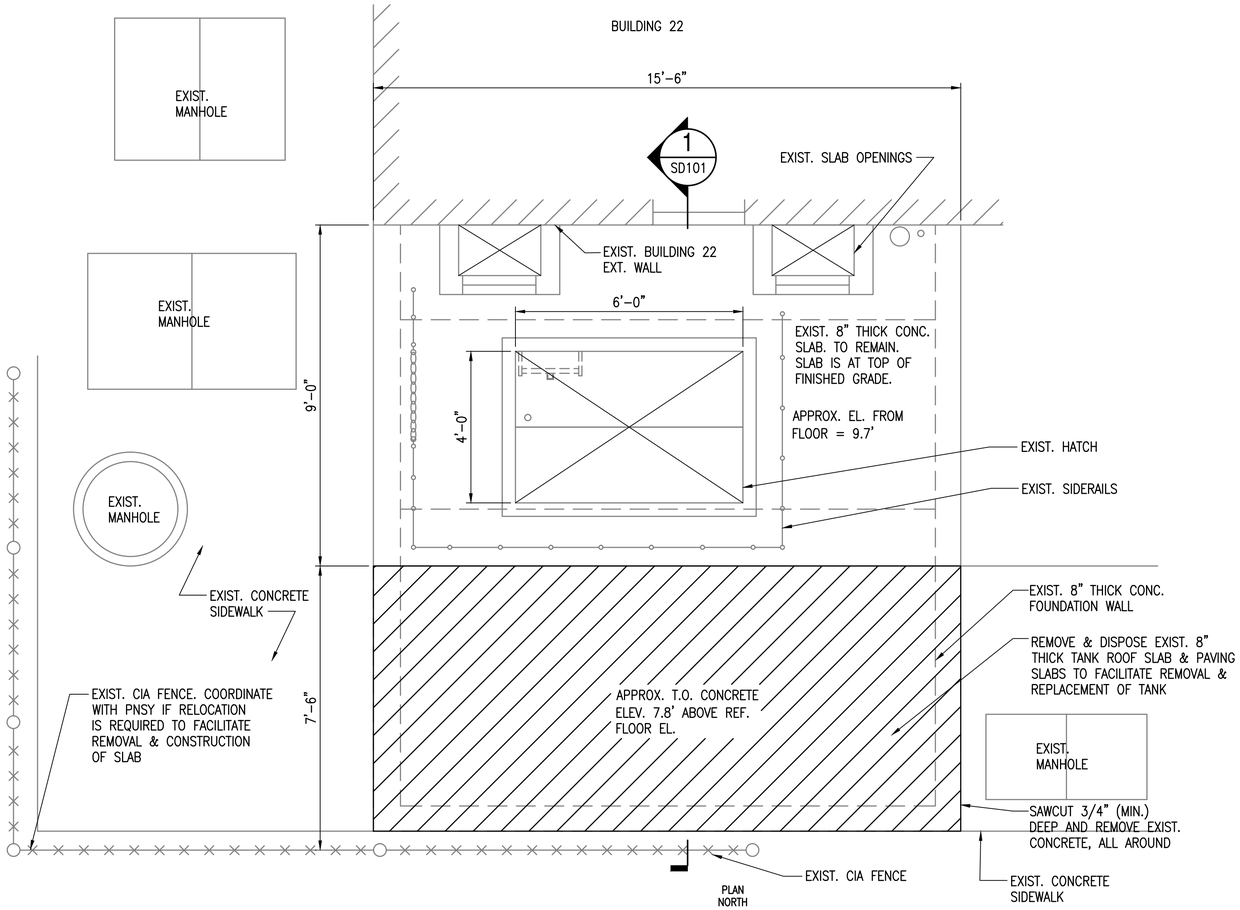

DEMOLITION ROOF PLAN

SCALE: 1/2" = 1'-0"

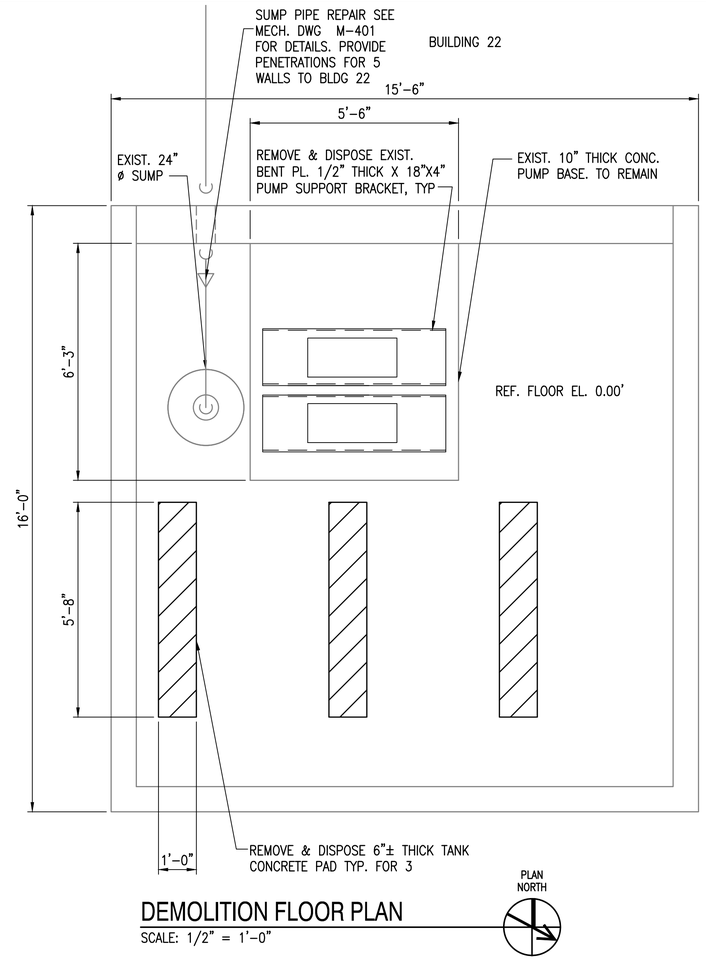

DEMOLITION FLOOR PLAN

SCALE: 1/2" = 1'-0"

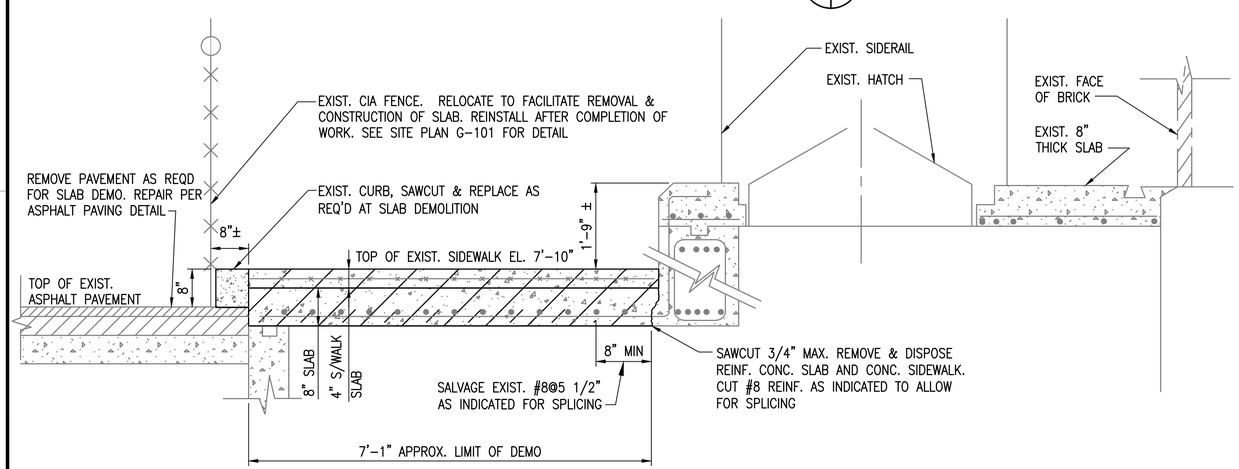

DEMOLITION SECTION

SCALE: 3/4" = 1'-0" SD101 1

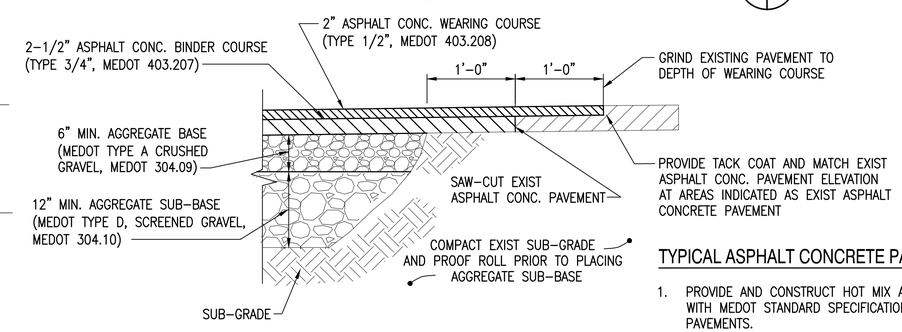

TYPICAL ASPHALT CONCRETE DETAIL- C.I.A.

SCALE: NOT TO SCALE

TYPICAL ASPHALT CONCRETE PAVEMENT NOTES:

1. PROVIDE AND CONSTRUCT HOT MIX ASPHALT IN ACCORDANCE WITH MEDOT STANDARD SPECIFICATIONS, DIVISION 400 – PAVEMENTS.
2. PROVIDE AND CONSTRUCT SUB-BASE AND BASE MATERIALS IN ACCORDANCE WITH MEDOT STANDARD SPECIFICATIONS,
3. DIVISION 300 – BASES.
4. MATERIALS SHALL COMPLY WITH APPLICABLE SECTIONS OF MEDOT SPECIFICATIONS DIVISION 700 – MATERIALS.

GRAPHIC SCALE

0 1' 2' 3' SCALE:3/4"=1'

0 1' 2' 4' SCALE:1/2"=1'-0"

SYM	DESCRIPTION	DATE	APPR

NAVFAC

COMMONWEALTH OF MASSACHUSETTS ROBERT G. NJOROGE CIVIL No. 49642 REGISTERED PROFESSIONAL ENGINEER

SEAL

ENGINEERS FST Since 1914
FAY, SPOFFORD & THORNDIKE
5 BURLINGTON WOODS BURLINGTON, MA 01803
A/E INFO

APPROVED
FOR COMMANDER NAVFAC
ACTIVITY
SATISFACTORY TO DATE
DES RGN DRW RGN CHK VMG
PWD-ME DM/POC P. STOCKLESS
BRANCH MANAGER
CHIEF ENG/ARCH
FIRE PROTECTION

DEPARTMENT OF THE NAVY
NAVAL FACILITIES ENGINEERING COMMAND
PUBLIC WORKS DEPARTMENT – MAINE
NAVAL FACILITIES ENGINEERING COMMAND ~ MID-ATLANTIC
NAVAL SHIPYARD – PORTSMOUTH, NH
PORTSMOUTH NAVAL SHIPYARD
KITTERY, MAINE
REPLACE CONDENSATE PUMP STATIONS
BUILDINGS 22 & 347
DEMOLITION FLOOR PLAN, ROOF PLAN & SECTION – BUILDING 22

MAXIMO No.: 7725935
EPROJECT NO.: 1331739
CONSTR. CONTR. NO.
NAVFAC DRAWING NO. 12680392
SHEET 5 OF 26
SD101 MS-14-1246

DRAWFORM REVISION: 10 MARCH 2009

FILE NAME: U:\bq-207aa – steam\CADD\Buildings\03_Structural\BQ-207A4-SD101.dwg LAYOUT NAME: SD101 PLOTTED: Wednesday, August 06, 2014 – 8:06am USER: Wronsk_V

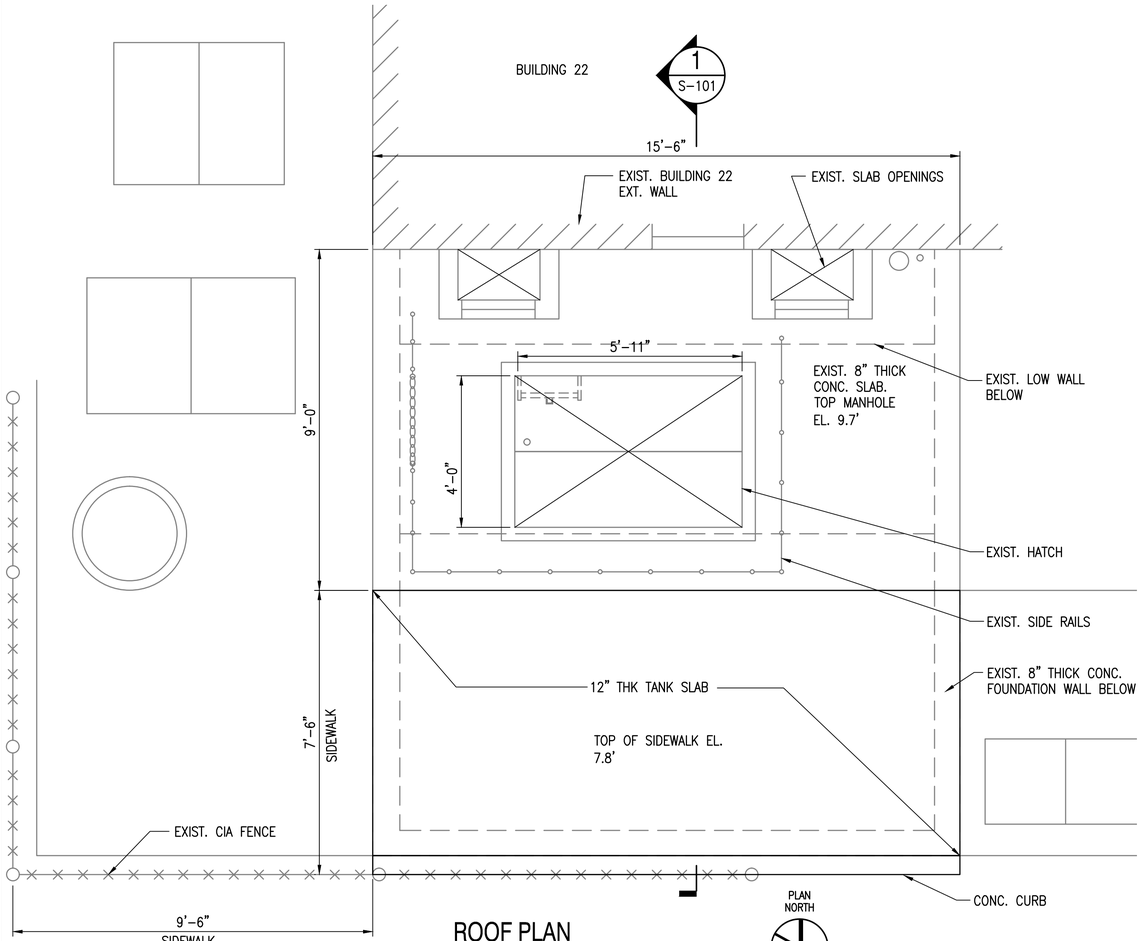

ROOF PLAN

SCALE: 1/2" = 1'-0"

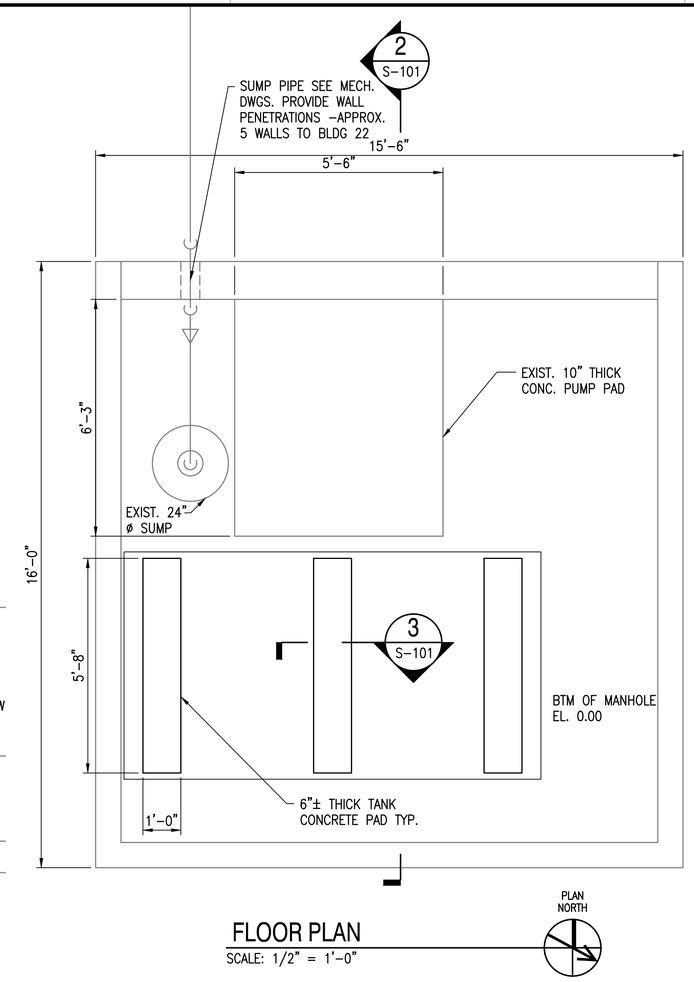

FLOOR PLAN

SCALE: 1/2" = 1'-0"

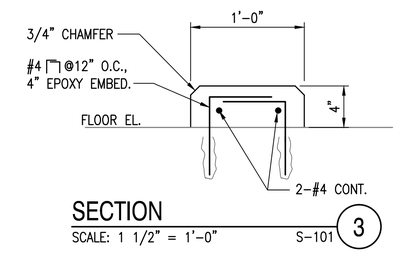

SECTION 3

SCALE: 1 1/2" = 1'-0" S-101

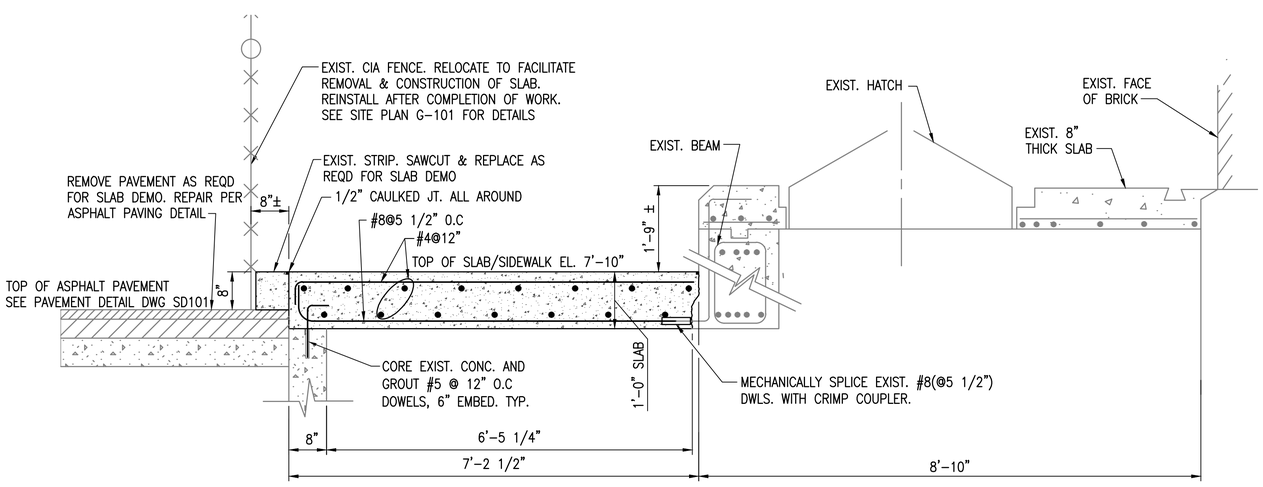

SECTION 1

SCALE: 3/4" = 1'-0" S-101

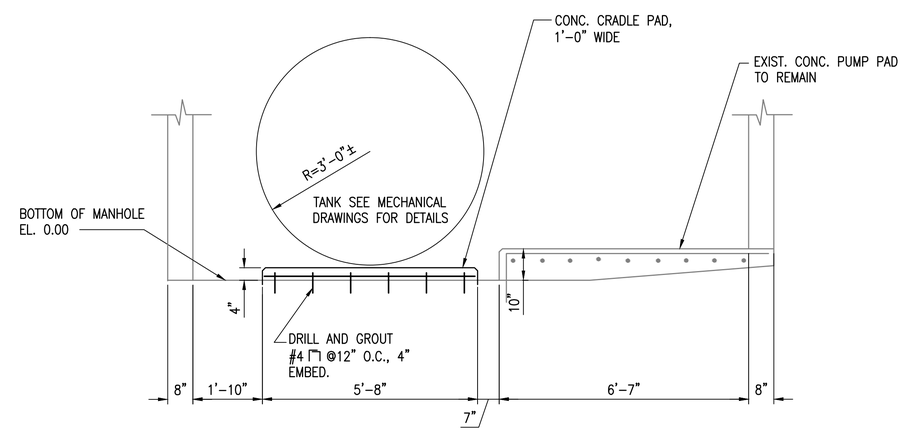

SECTION 2

SCALE: 1/2" = 1'-0" S-101

GRAPHIC SCALE

0 1' 2' 3' SCALE:3/4"=1'

0 6" 1' 2' SCALE:1-1/2"=1'

0 1' 2' 4' SCALE:1/2"=1'-0"

SYM	DESCRIPTION	DATE	APPR

NAVFAC

COMMONWEALTH OF MASSACHUSETTS ROBERT G. NJOROGE CIVIL No. 49642 REGISTERED PROFESSIONAL ENGINEER

SEAL

ENGINEERS FST Since 1914
FAY, SPOFFORD & THORNDIKE
5 BURLINGTON WOODS
BURLINGTON, MA 01803

A/E INFO

APPROVED

FOR COMMANDER NAVFAC

ACTIVITY

SATISFACTORY TO DATE

DES RGN | DRW RGN | CHK VMG

PWD-ME DM/POC P. STOCKLESS

BRANCH MANAGER

CHIEF ENG/ARCH

FIRE PROTECTION

DEPARTMENT OF THE NAVY
NAVAL FACILITIES ENGINEERING COMMAND
PUBLIC WORKS DEPARTMENT - MAINE

NAVAL FACILITIES ENGINEERING COMMAND ~ MID-ATLANTIC
NAVAL SHIPYARD ~ PORTSMOUTH, NH

PORTSMOUTH NAVAL SHIPYARD
KITTERY, MAINE

REPLACE CONDENSATE PUMP STATIONS BUILDINGS 22 & 347

FLOOR PLANS & SECTIONS - BUILDING 22

MAXIMO No.: 7725935

EPROJECT NO.: 1331739

CONSTR. CONTR. NO.

NAVFAC DRAWING NO. 12680393

SHEET 6 OF 26

S-101 | MS-14-1247

DRAWFORM REVISION: 10 MARCH 2009

FILE NAME: U:\bq-207aa - steam\CADD\Buildings\03_Structural\BQ-207AA-S-101.dwg LAYOUT NAME: S-101 PLOTTED: Wednesday, August 06, 2014 - 7:55am USER: Wronsk_V

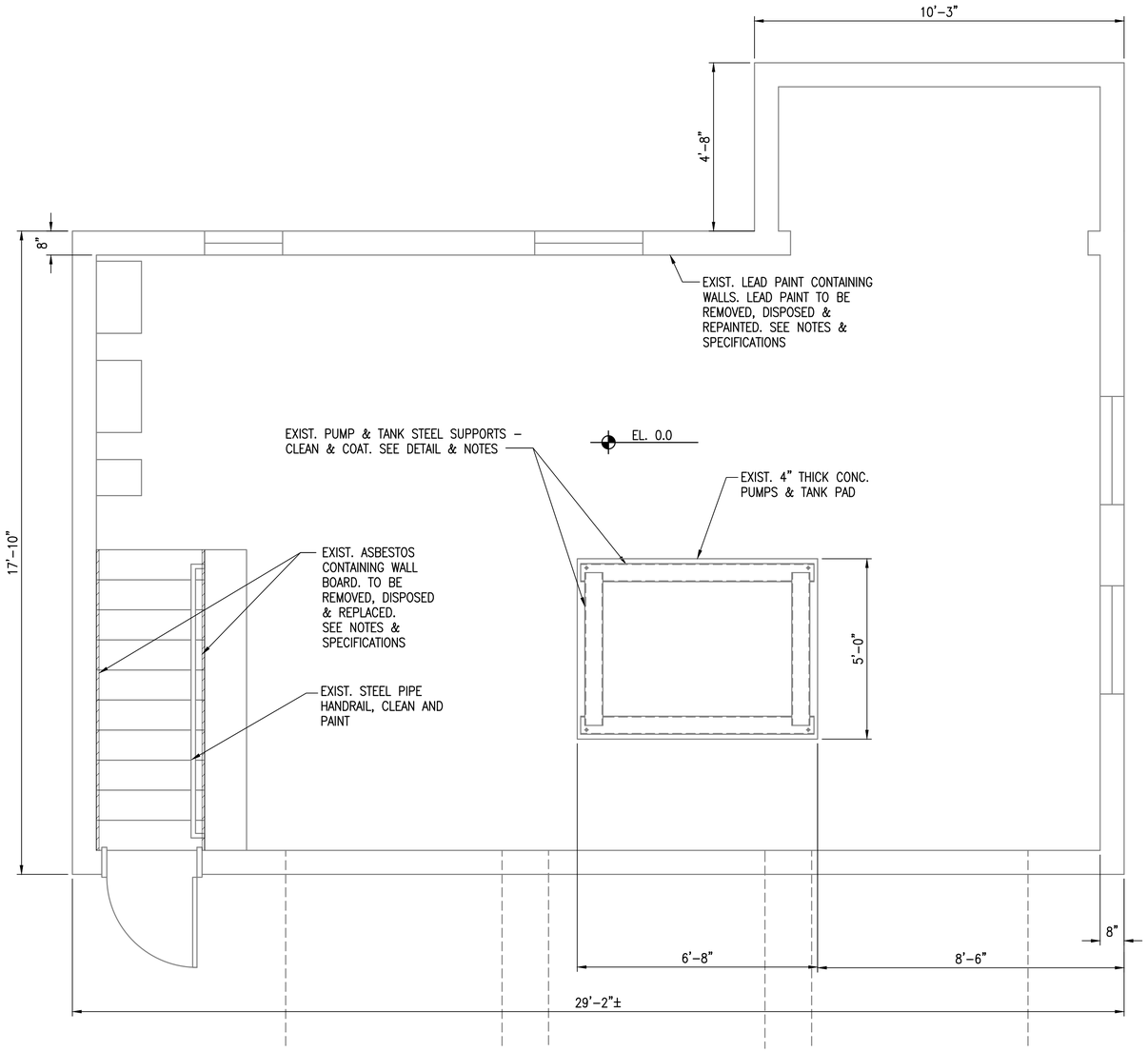

FLOOR PLAN

SCALE: 1/2" = 1'-0"

NOTES:

1. REFER TO STRUCTURAL NOTES DRAWING, S-001 FOR STRUCTURAL STEEL SURFACE PREPARATION & COATING REQUIREMENTS.

2. HAZARDOUS MATERIAL ABATEMENT: THE FOLLOWING ELEMENTS ARE CONSIDERED TO CONTAIN HAZARDOUS MATERIALS:

   - 150 SQUARE FT OF EXISTING STAIRWAY SOUTH WALL BOARD, STAIRWAY CEILING BOARD & STAIRWAY NORTH WALL BOARD – ASBESTOS
   - 60 SQUARE FT OF EXISTING ROOFING SHINGLES– ASBESTOS
   - ALL EXISTING PAINT FOR INTERNAL CONCRETE WALLS & CEILING – LEAD
   - 100 SQUARE FT SECTION OF EXISTING NORTH INTERNAL WALL – MOLD

3. WALL BOARD SHALL BE REPLACED WITH 5/16" (MIN) THICK PREFINISHED HIGH DENSITY FIBER CEMENT PANELS CONFORMING TO ASTM C 1185, ASTM C 1186. GYPSUM WALL BOARD IS NOT ACCEPTABLE.

4. A CERTIFIED INDUSTRIAL HYGIENIST SHALL CREATE HAZARD ABATEMENT PLANS FOR EACH HAZARDOUS MATERIAL, WHICH SHALL BE ABATED IN ACCORDANCE WITH SPECIFIC HAZARD ABATEMENT PLANS, ALL STATE AND LOCAL LAWS, AND PORTSMOUTH NAVAL SHIPYARD REQUIREMENTS. REFER TO PROJECT SPECIFICATIONS FOR APPROPRIATE DISPOSAL METHODS.

TANK SUPPORTS

SCALE: NOT TO SCALE

GRAPHIC SCALE

0 1' 2' 4'

SCALE:1/2"=1'-0"

MTK	DESCRIPTION	DATE	APPR

NAVFAC

COMMONWEALTH OF MASSACHUSETTS – ROBERT G. NJOROGE – CIVIL – No. 49642 – REGISTERED PROFESSIONAL ENGINEER – SEAL

ENGINEERS FST Since 1914
FAY, SPOFFORD & THORNDIKE
5 BURLINGTON WOODS
BURLINGTON, MA 01803
A/E INFO

APPROVED
FOR COMMANDER NAVFAC
ACTIVITY
SATISFACTORY TO DATE

DES RGN | DRW RGN | CHK VMG
PWD-ME DM/POC P. STOCKLESS
BRANCH MANAGER
CHIEF ENG/ARCH
FIRE PROTECTION

DEPARTMENT OF THE NAVY
NAVAL FACILITIES ENGINEERING COMMAND ~ MID-ATLANTIC
PUBLIC WORKS DEPARTMENT – MAINE
NAVAL FACILITIES ENGINEERING COMMAND
NAVAL SHIPYARD – PORTSMOUTH, NH
PORTSMOUTH NAVAL SHIPYARD
KITTERY, MAINE
REPLACE CONDENSATE PUMP STATIONS
BUILDINGS 22 & 347
FLOOR PLAN AND TANK SUPPORTS – BUILDING 347

MAXIMO No.: 7725935
EPROJECT NO.: 1331739
CONSTR. CONTR. NO.
NAVFAC DRAWING NO. 12680394
SHEET 7 OF 26
S-102 | MS-14-1248

DRAWFORM REVISION: 10 MARCH 2009

FILE NAME: U:\bq-207oa – steam\CADD\Buildings\03_Structural\B9-207AA-S-102.dwg LAYOUT NAME: S-102 PLOTTED: Wednesday, August 06, 2014 – 8:14am USER: Wronsk_V

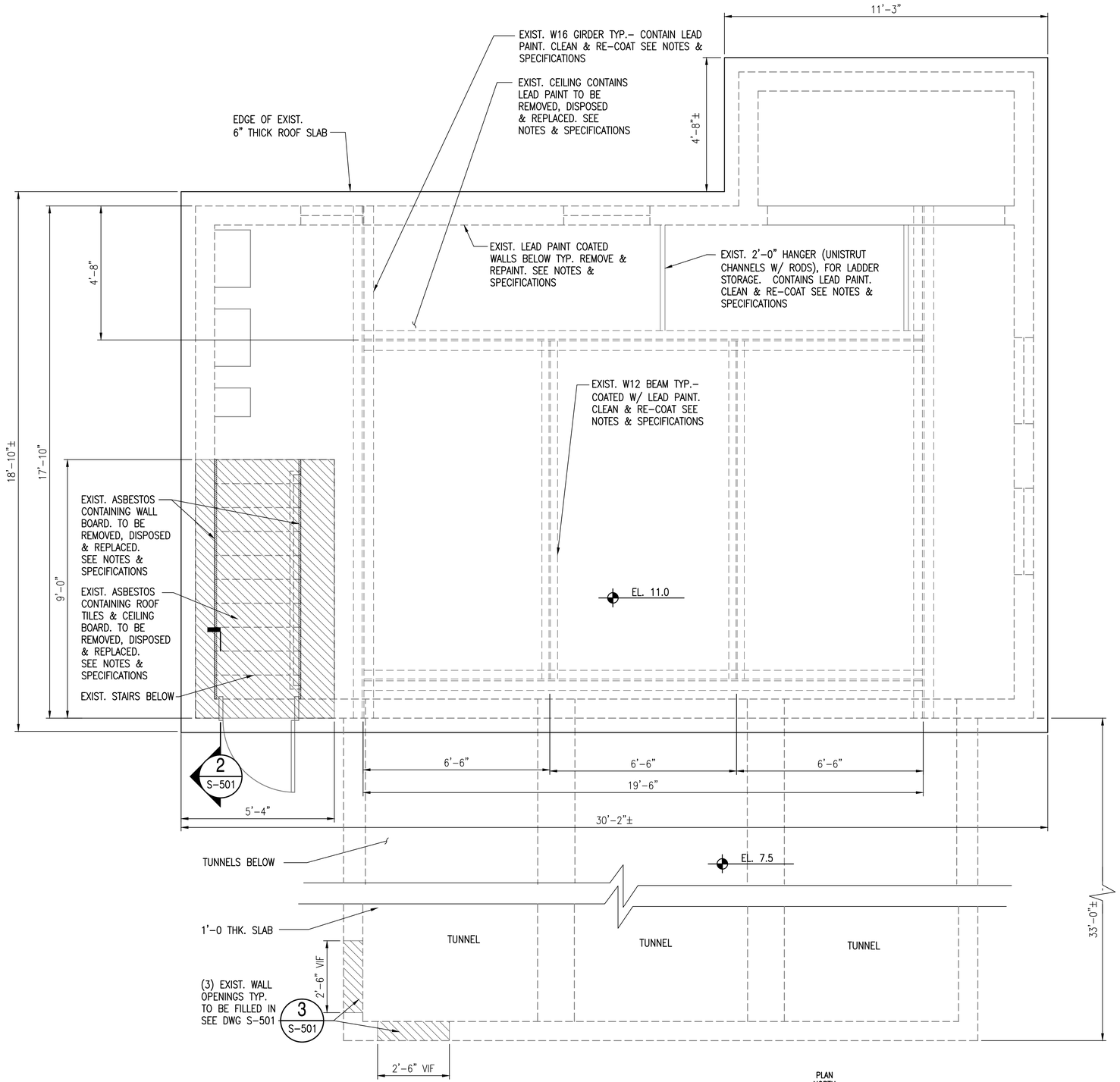

ROOF PLAN

SCALE: 1/2" = 1'-0"

NOTES:

1. REFER TO STRUCTURAL NOTES DRAWING, S-001 FOR STRUCTURAL STEEL SURFACE PREPARATION & COATING REQUIREMENTS.
2. HAZARDOUS MATERIAL ABATEMENT: THE FOLLOWING ELEMENTS ARE CONSIDERED TO CONTAIN HAZARDOUS MATERIALS:
   - 150 SQUARE FT OF EXISTING STAIRWAY SOUTH WALL BOARD, STAIRWAY CEILING BOARD & STAIRWAY NORTH WALL BOARD– ASBESTOS
   - 60 SQUARE FT OF EXISTING ROOFING TILES.
   - ALL EXISTING INTERNAL CONCRETE FOUNDATION WALLS & CEILING PAINT– LEAD
   - ALL EXISTING W16, W12 STEEL BEAMS & STEEL HANGERS – LEAD
   - 100 SQUARE FT SECTION OF EXISTING NORTH INTERNAL WALL – MOLD
3. ALL BOARD SHALL BE REPLACED WITH 5/16" (MIN) THICK PREFINISHED HIGH DENSITY FIBER CEMENT PANELS CONFORMING TO ASTM C 1185, ASTM C 1186. GYPSUM WALL BOARD IS NOT ACCEPTABLE.
4. A CERTIFIED INDUSTRIAL HYGIENIST SHALL CREATE HAZARD ABATEMENT PLANS FOR EACH HAZARDOUS MATERIAL, WHICH SHALL BE ABATED IN ACCORDANCE WITH SPECIFIC HAZARD ABATEMENT PLANS, ALL STATE AND LOCAL LAWS, AND PORTSMOUTH NAVAL SHIPYARD REQUIREMENTS. REFER TO PROJECT SPECIFICATIONS FOR APPROPRIATE DISPOSAL METHODS.

GRAPHIC SCALE

0 1' 2' 4'

SCALE:1/2"=1'-0"

SYM	DESCRIPTION	DATE	APPR

NAVFAC

COMMONWEALTH OF MASSACHUSETTS ROBERT G. NJOROGE CIVIL No. 49642 REGISTERED PROFESSIONAL ENGINEER

SEAL

ENGINEERS FST Since 1914

FAY, SPOFFORD & THORNDIKE
5 BURLINGTON WOODS
BURLINGTON, MA 01803

A/E INFO

APPROVED

FOR COMMANDER NAVFAC

ACTIVITY

SATISFACTORY TO DATE

DES RGN DRW RGN CHK VMG

PWD-ME DM/POC P. STOCKLESS

BRANCH MANAGER

CHIEF ENG/ARCH

FIRE PROTECTION

DEPARTMENT OF THE NAVY
NAVAL FACILITIES ENGINEERING COMMAND
NAVAL FACILITIES ENGINEERING COMMAND ~ MID-ATLANTIC
PUBLIC WORKS DEPARTMENT – MAINE
NAVAL SHIPYARD – PORTSMOUTH, NH
PORTSMOUTH NAVAL SHIPYARD
KITTERY, MAINE

REPLACE CONDENSATE PUMP STATIONS
BUILDINGS 22 & 347

ROOF PLAN – BUILDING 347

MAXIMO No.: 7725935
EPROJECT NO.: 1331739
CONSTR. CONTR. NO.
NAVFAC DRAWING NO. 12680395
SHEET 8 OF 26
S-103 MS-14-1249

DRAWFORM REVISION: 10 MARCH 2009

FILE NAME: U:\pa-207aa – steam\CADD\Buildings\03_Structural\BG-207AA-S-103.dwg LAYOUT NAME: S-103 PLOTTED: Wednesday, August 06, 2014 – 8:16am USER: Wronsk_V

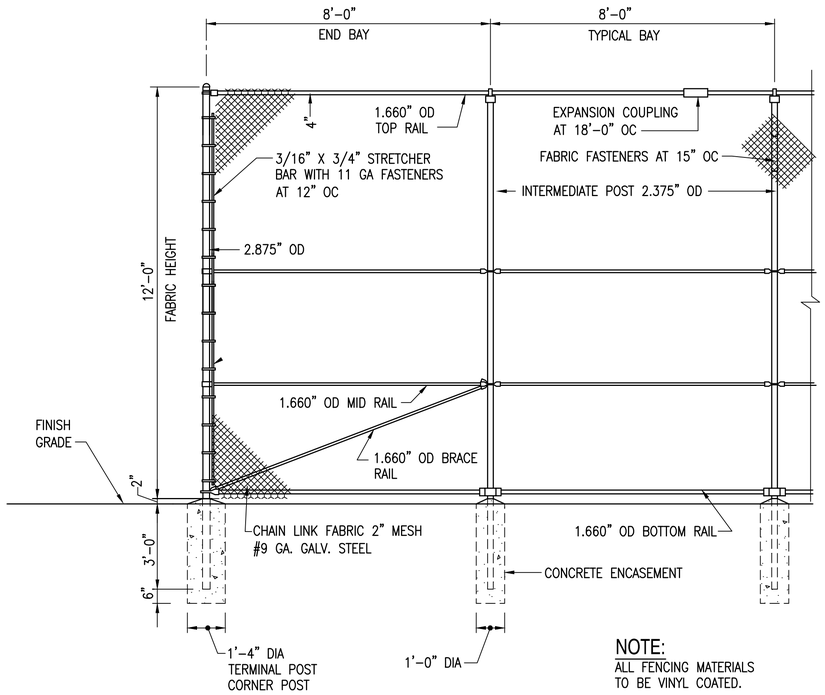

NOTE:
ALL FENCING MATERIALS
TO BE VINYL COATED.

PERMANENT FENCE DETAIL (1)

SCALE: NOT TO SCALE G-101

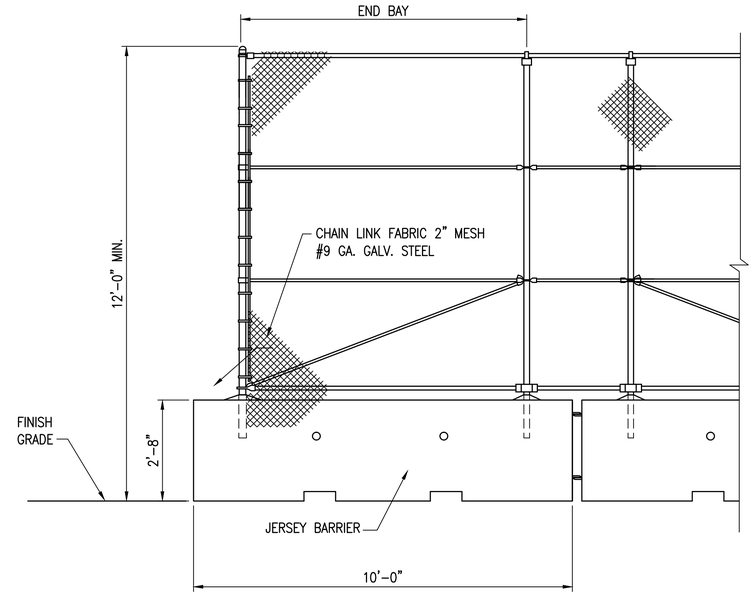

TEMPORARY FENCE DETAIL (4)

SCALE: NOT TO SCALE G-101

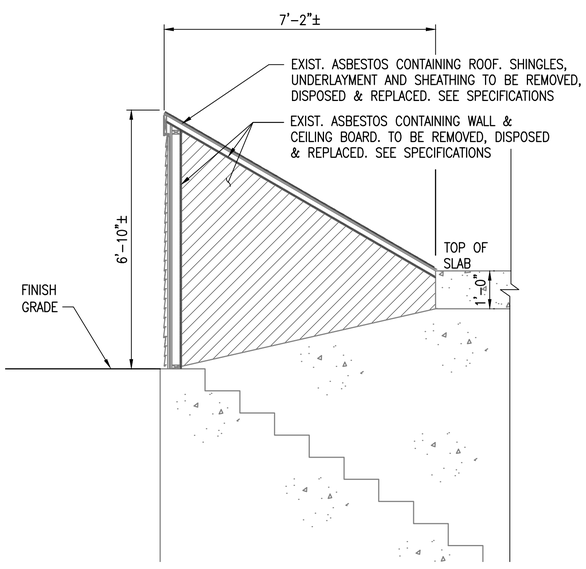

SECTION (2)

SCALE: NOT TO SCALE S-103

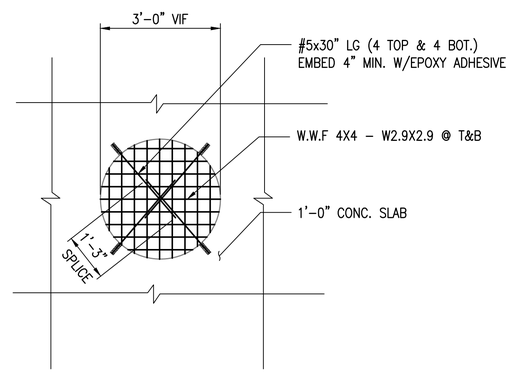

DETAIL (3)

SCALE: NOT TO SCALE S-103

SYM	DESCRIPTION	DATE	APPR

NAVFAC

COMMONWEALTH OF MASSACHUSETTS
ROBERT G. NORDGE
CIVIL
No. 49642
REGISTERED PROFESSIONAL ENGINEER
SEAL

ENGINEERS
FST
Since 1914
FAY, SPOFFORD & THORNDIKE
5 BURLINGTON WOODS
BURLINGTON, MA 01803
A/E INFO

APPROVED
FOR COMMANDER NAVFAC
ACTIVITY
SATISFACTORY TO DATE
DES RGN | DRW RGN | CHK VMG
PWD-ME OM/POC P. STOCKLESS
BRANCH MANAGER
CHIEF ENG/ARCH
FIRE PROTECTION

DEPARTMENT OF THE NAVY
NAVAL FACILITIES ENGINEERING COMMAND
PUBLIC WORKS DEPARTMENT - MAINE

NAVAL FACILITIES ENGINEERING COMMAND ~ MID-ATLANTIC
NAVAL SHIPYARD ~ PORTSMOUTH, NH

PORTSMOUTH NAVAL SHIPYARD
KITTERY, MAINE

REPLACE CONDENSATE PUMP STATIONS
BUILDINGS 22 & 347

DETAILS

MAXIMO No.: 7725935
EPROJECT NO.: 1331739
CONSTR. CONTR. NO.
NAVFAC DRAWING NO.
12680396
SHEET 9 OF 26
S-501 | MS-14-1250

DRAWFORM REVISION: 10 MARCH 2009

FILE NAME: U:\bq-207aa - steam\CADD\Buildings\03_Structural\BQ-207AA-S-501.dwg LAYOUT NAME: S-501 PLOTTED: Wednesday, August 06, 2014 - 8:19am USER: Wronsk_V