LEGEND:

- CONNECT NEW WORK TO EXISTING
- LIMIT OF DEMOLITION
- FRESH AIR
- EXHAUST AIR
- FEATURES TO BE PROVIDED UNDER THIS CONTRACT SHOWN THUS
- EXISTING FEATURES SHOWN THUS
- RISER UP
- RISER DOWN
- BRANCH–TOP CONNECTION
- TEE DOWN
- TEE
- UNION
- FLANGE
- CONCENTRIC REDUCER
- DIRECTION OF FLOW
- DIRECTION OF DOWNWARD PITCH
- CAP ON END OF PIPE
- STRAINER
- TRAP
- BALL VALVE
- CHECK VALVE
- BUTTERFLY VALVE
- (1) DEMOLITION / REMOVAL KEYNOTE NUMBER
- [1] NEW WORK KEYNOTE NUMBER
- EXISTING TO REMOVE
- (FS) FLOAT SWITCH

ABBREVIATIONS:

ABAND	ABANDONED
ADJ.	ADJASTABLE
CH	CHANNEL
CONC	CONCRETE
CR	CONDENSATE RETURN
CRP	CONDENSATE RETURN PUMP
CRT	CONDENSATE RETURN TANK
DN	DOWN
EF	EXHAUST FAN
EXIST	EXISTING
FC	FLEXIBLE CONNECTION
FP	FIRE PROTECTION
FRP	FIBER REINFORCED PLASTIC
FT	FOOT, FEET
F&T	FLOAT AND THERMOSTATIC
FTR	FINTUBE RADIATOR
FW	FRESH WATER
GALV	GALVANIZED
H	HIGH
HOR	HORIZONTAL
HPS	HIGH PRESSURE STEAM
ID	INSIDE DIAMETER
LG	LONG
LPS	LOW PRESSURE STEAM
MAX	MAXIMUM
MIN	MINIMUM
MFR'S	MANUFACTURER'S
MH	MANHOLE
NIC	NOT IN CONTRACT
OD	OUTSIDE DIAMETER
P	PUMP
PCR	PUMPED CONDENSATE RETURN
PD	PUMP DISCHARGE
PG	PRIMARY GUIDE
PRV	PRESSURE REDUCING VALVE
RCP	REINFORCED CONCRETE PIPE
SCH	SCHEDULE
SP	SUMP PUMP
SS	SANITARY SEWER
SST	STAINLESS STEEL
STM	STEAM
TH	THICK
TYP	TYPICAL
UH	UNIT HEATER
VB	VACUUM BREAKER
VERT	VERTICAL
VIF	VERIFY IN FIELD
W	WATER
WMS	WIRE MESH SCREEN

GENERAL NOTES:

1. ALL WORK SHALL BE IN ACCORDANCE WITH THE 2012 INTERNATIONAL MECHANICAL CODE (IMC) AND ASME B31.1 FOR PRESSURE PIPING.
2. REMOVAL OF EXISTING PIPING SHALL INCLUDE REMOVAL OF PIPING, INSULATION, JACKETING, GUIDES, SUPPORTS, ANCHORS, AND ACCESSORIES.
3. PRIOR TO ENTERING VAULTS, MANHOLES, OR OTHER CONFINED SPACES, THE CONTRACTOR SHALL MONITOR FOR HAZARDOUS GASES. THIS MONITORING SHALL CONTINUE WHILE WORK IS BEING PERFORMED IN THE VAULT OR CONFINED SPACE.
4. HIGH PRESSURE STEAM SERVICE PRESSURE IS 125 PSI, TEMPERATURE IS 410°F. CONDENSATE RETURN PRESSURE IS 125 PSI, TEMPERATURE IS 250°F.
5. PROVIDE REMOVABLE INSULATION COVERS FOR VALVES IN VAULTS.
6. A CERTIFIED INDUSTRIAL HYGIENIST SHALL CREATE HAZARD ABATEMENT PLANS FOR EACH HAZARDOUS MATERIAL, WHICH SHALL BE ABATED IN ACCORDANCE WITH SPECIFIC HAZARD ABATEMENT PLANS, ALL STATE AND LOCAL LAWS, AND PORTSMOUTH NAVAL SHIPYARD REQUIREMENTS. REFER TO PROJECT SPECIFICATIONS FOR APPROPRIATE DISPOSAL METHODS.

WORK NOTES:

[1] FOR CONDENSATE DRAIN PIPING, PROVIDE INSULATION FOR BURN PROTECTION. SEAL EXPOSED ENDS OF INSULATION WITH MANUFACTURER'S STANDARD SEALANT. PAINT EXPOSED ENDS OF INSULATION WITH SUITABLE PAINT WITH AN ALLOWABLE TEMPERATURE RANGE BETWEEN 140 AND 260 DEGREES FAHRENHEIT. DESIGN BASED ON HI–TEMP COATING #1027. PAINT COLOR SHALL BE GRAY.

[2] PAINT STEAM AND CONDENSATE PIPE WITH A INORGANIC ZINC RICH PRIMER. ACCEPTABLE ZINC RICH PRIMERS ARE PITTSBURGH METALHIDE 1001, SHERMAN WILLIAMS ZINC–CLAD 11 HS AND CARBOLINE CARBO–ZINC II. PRIMER THICKNESS 2 MIL MINIMUM DFT; 4 MILS MAXIMUM DFT. PAINT TOP COAT USING EPOXY POLYAMIDE PER MANUFACTURER'S INSTRUCTIONS.

SYM	DESCRIPTION	DATE	APPR

NAVFAC

COMMONWEALTH OF MASSACHUSETTS
MICHAEL W. TRAVERS
MECHANICAL
No. 48711
REGISTERED PROFESSIONAL ENGINEER
SEAL

ENGINEERS
FST
Since 1914
FAY, SPOFFORD & THORNDIKE
5 BURLINGTON WOODS
BURLINGTON, MA 01803
A/E INFO

APPROVED
FOR COMMANDER NAVFAC
ACTIVITY
SATISFACTORY TO DATE

DES YK | DRW YK | CHK MWT
PWD–ME DM/POC P. STOCKLESS
BRANCH MANAGER
CHIEF ENG/ARCH
FIRE PROTECTION

DEPARTMENT OF THE NAVY
NAVAL FACILITIES ENGINEERING COMMAND
NAVAL FACILITIES ENGINEERING COMMAND ~ MID-ATLANTIC
PUBLIC WORKS DEPARTMENT – MAINE
NAVAL SHIPYARD – PORTSMOUTH, NH
PORTSMOUTH NAVAL SHIPYARD
KITTERY, MAINE
REPLACE CONDENSATE PUMP STATIONS
BUILDINGS 22 & 347
LEGEND, ABBREVIATIONS, AND GENERAL NOTES

MAXIMO No.: 7725935
EPROJECT NO.: 1331739
CONSTR. CONTR. NO.
NAVFAC DRAWING NO.
12680397
SHEET 10 OF 26
M-001 | MS-14-1251

DRAWFORM REVISION: 10 MARCH 2009

FILE NAME: U:\ps-207aa – steam\CADD\Buildings\04_Mechanical\BG-207AA-M-001.dwg LAYOUT NAME: M-001 PLOTTED: Wednesday, August 06, 2014 – 11:47am USER: Wrensk_V

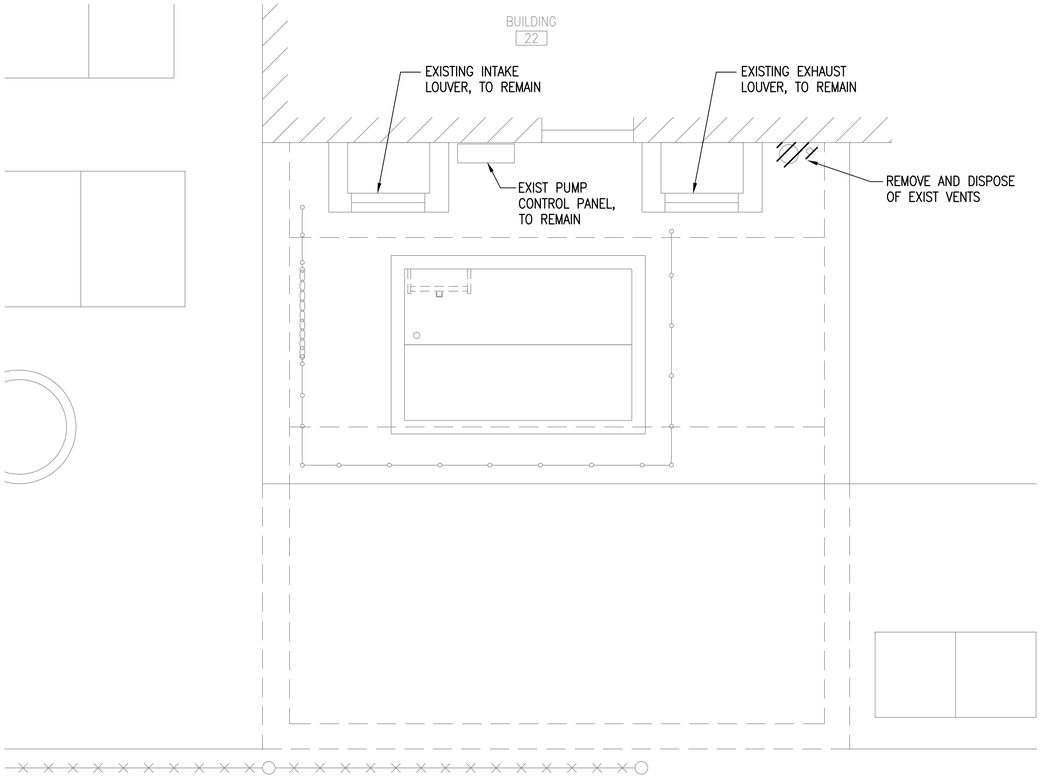

ROOF PLAN
SCALE: 1/2" = 1'-0"

PLAN NORTH

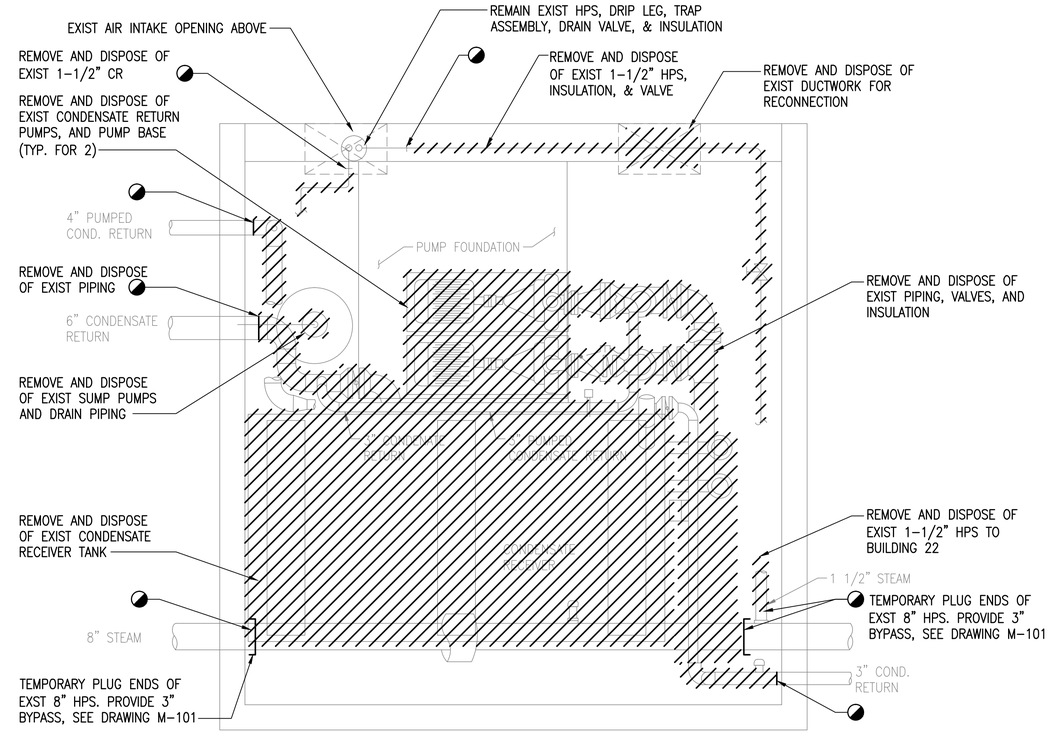

FLOOR PLAN
SCALE: 1/2" = 1'-0"

PLAN NORTH

GRAPHIC SCALE

0 1' 2' 4'

SCALE:1/2"=1'-0"

SYM	DESCRIPTION	DATE	APPR

NAVFAC

COMMONWEALTH OF MASSACHUSETTS
MICHAEL W. TRAVERS
MECHANICAL
No. 48711
REGISTERED PROFESSIONAL ENGINEER
SEAL

ENGINEERS
FST
Since 1914
FAY, SPOFFORD & THORNDIKE
5 BURLINGTON WOODS
BURLINGTON, MA 01803
A/E INFO.

APPROVED
FOR COMMANDER NAVFAC
ACTIVITY
SATISFACTORY TO DATE
DES YK DRW YK CHK MWT
PWD-ME DM/POC P. STOCKLESS
BRANCH MANAGER
CHIEF ENG/ARCH
FIRE PROTECTION

DEPARTMENT OF THE NAVY
NAVAL FACILITIES ENGINEERING COMMAND
PUBLIC WORKS DEPARTMENT – MAINE
NAVAL FACILITIES ENGINEERING COMMAND ~ MID-ATLANTIC
NAVAL SHIPYARD – PORTSMOUTH, NH
PORTSMOUTH NAVAL SHIPYARD
KITTERY, MAINE
REPLACE CONDENSATE PUMP STATIONS
BUILDINGS 22 & 347
DEMOLITION FLOOR PLANS – BUILDING 22

MAXIMO No.: 7725935
EPROJECT NO.: 1331739
CONSTR. CONTR. NO.
NAVFAC DRAWING NO.
12680398
SHEET 11 OF 26
MD101 MS-14-1252

DRAWFORM REVISION: 10 MARCH 2009

FILE NAME: U:\bq-207aa – steam\CADD\Buildings\04_Mechanical\BQ-207AA-MD101.dwg LAYOUT NAME: MD101 PLOTTED: Wednesday, August 06, 2014 – 11:46am USER: Worrek_V

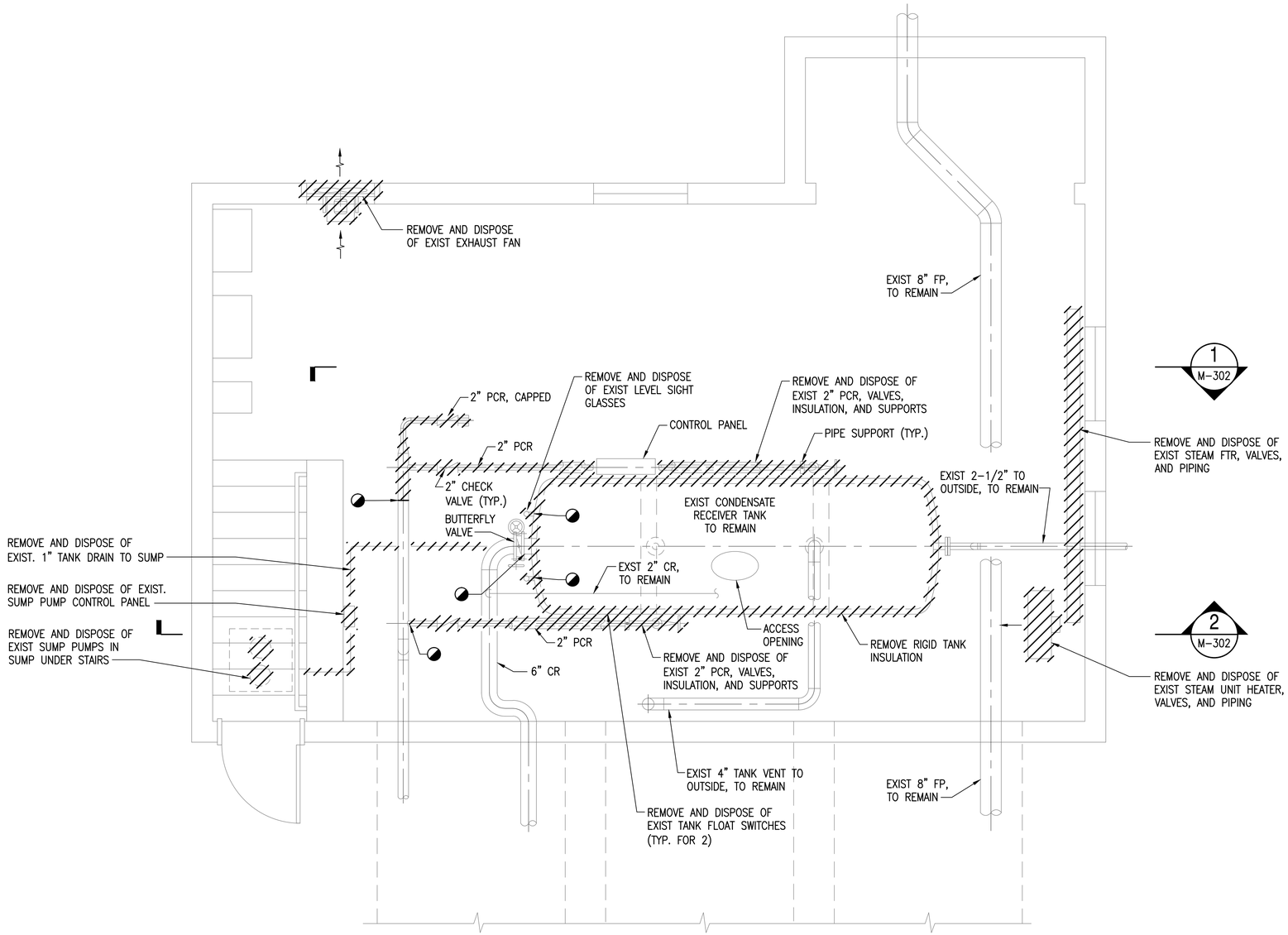

DEMOLITION FLOOR PLAN

SCALE: 1/2" = 1'-0"

PLAN NORTH

GRAPHIC SCALE

0 1' 2' 4'

SCALE:1/2"=1'-0"

SYM	DESCRIPTION	DATE	APPR

NAVFAC

COMMONWEALTH OF MASSACHUSETTS
MICHAEL W. TRAVERS
MECHANICAL
No. 48711
REGISTERED PROFESSIONAL ENGINEER
SEAL

ENGINEERS
FST
Since 1914
FAY, SPOFFORD & THORNDIKE
5 BURLINGTON WOODS
BURLINGTON, MA 01803
A/E INFO

APPROVED
FOR COMMANDER NAVFAC
ACTIVITY
SATISFACTORY TO DATE

DES	YK	DRW	YK	CHK	MWT

PWD-ME DM/POC P. STOCKLESS
BRANCH MANAGER
CHIEF ENG/ARCH
FIRE PROTECTION

DEPARTMENT OF THE NAVY
NAVAL FACILITIES ENGINEERING COMMAND
PUBLIC WORKS DEPARTMENT - MAINE
NAVAL FACILITIES ENGINEERING COMMAND ~ MID-ATLANTIC
NAVAL SHIPYARD - PORTSMOUTH, NH
PORTSMOUTH NAVAL SHIPYARD
KITTERY, MAINE
REPLACE CONDENSATE PUMP STATIONS
BUILDINGS 22 & 347
DEMOLITION FLOOR PLAN - BUILDING 347

MAXIMO No.: 7725935
EPROJECT NO.: 1331739
CONSTR. CONTR. NO.
NAVFAC DRAWING NO. 12680399
SHEET 12 OF 26
MD102 MS-14-1253

DRAWFORM REVISION: 10 MARCH 2009

FILE NAME: U:\bq-207aa - steam\CADD\Buildings\04_Mechanical\BQ-207AA-MD102.dwg LAYOUT NAME: MD102 PLOTTED: Wednesday, August 06, 2014 - 11:45am USER: Wronsk_V

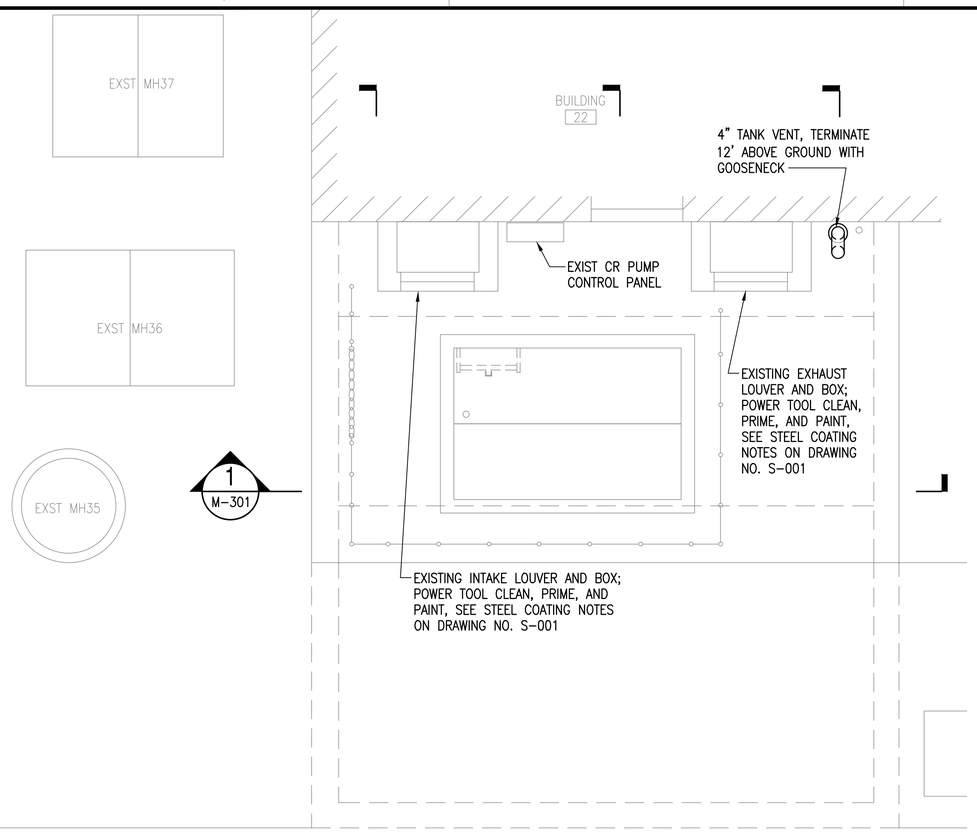

ROOF PLAN

SCALE: 1/2" = 1'-0"

PLAN NORTH

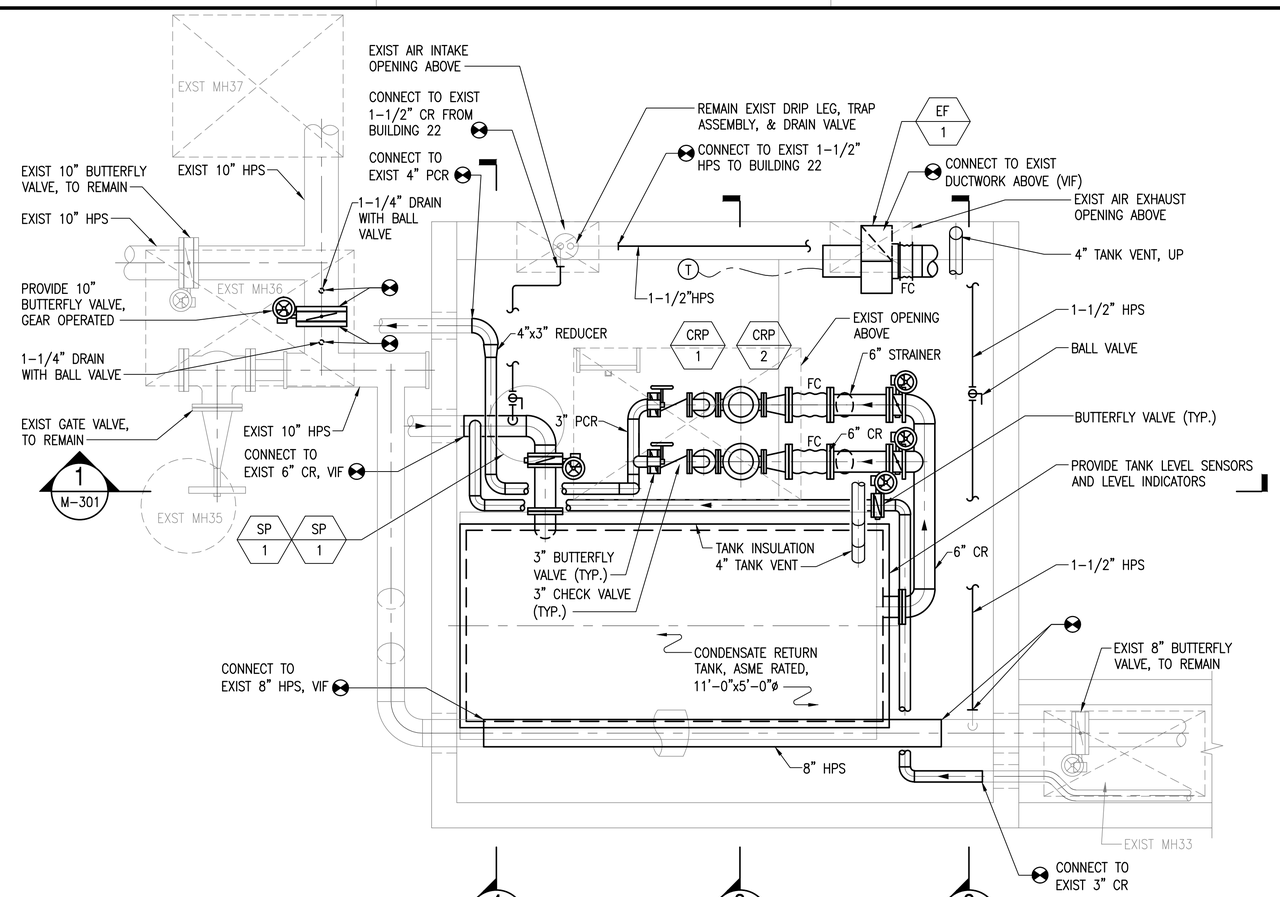

FLOOR PLAN

SCALE: 1/2" = 1'-0"

PLAN NORTH

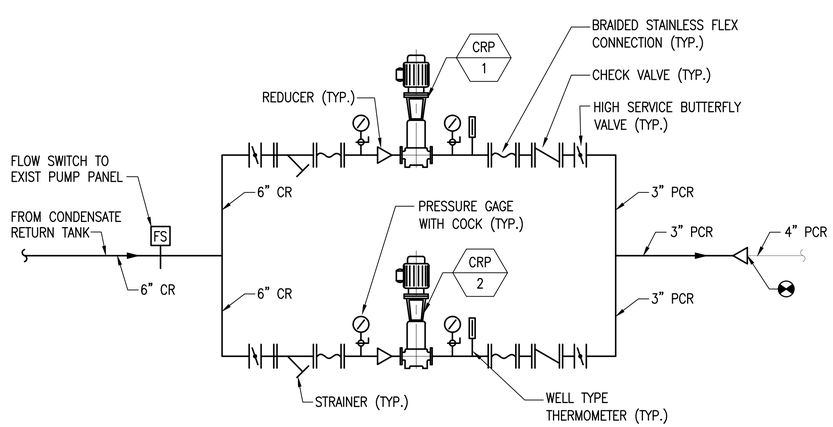

CONDENSATE PUMPS PIPING DIAGRAM

SCALE: NOT TO SCALE

GRAPHIC SCALE

0 1' 2' 4'

SCALE:1/2"=1'-0"

SYM	DESCRIPTION	DATE	APPR

NAVFAC

COMMONWEALTH OF MASSACHUSETTS MICHAEL W. TRAVERS MECHANICAL No. 48711 REGISTERED PROFESSIONAL ENGINEER

SEAL

ENGINEERS FST Since 1914

FAY, SPOFFORD & THORNDIKE
5 BURLINGTON WOODS
BURLINGTON, MA 01803

A/E INFO

APPROVED

FOR COMMANDER NAVFAC

ACTIVITY

SATISFACTORY TO DATE

DES DRW CHK

PWD-ME DM/POC P. STOCKLESS

BRANCH MANAGER

CHIEF ENGINEER YK YK MWT

FIRE PROTECTION

DEPARTMENT OF THE NAVY
NAVAL FACILITIES ENGINEERING COMMAND
PUBLIC WORKS DEPARTMENT - MAINE

NAVAL FACILITIES ENGINEERING COMMAND ~ MID-ATLANTIC
NAVAL SHIPYARD - PORTSMOUTH, NH

PORTSMOUTH NAVAL SHIPYARD
KITTERY, MAINE

REPLACE CONDENSATE PUMP STATIONS
BUILDINGS 22 & 347

FLOOR PLANS - BUILDING 22

MAXIMO No.: 7725935

EPROJECT NO.: 1331739

CONSTR. CONTR. NO.

NAVFAC DRAWING NO.
12680400

SHEET 13 OF 26

M-101 MS-14-1254

DRAWFORM REVISION: 10 MARCH 2009

FILE NAME: U:\bq-207aa - steam\CADD\Buildings\04_Mechanical\BQ-207AA-M-101.dwg LAYOUT NAME: M-101 PLOTTED: Wednesday, August 06, 2014 - 11:44am USER: Wronsk_V

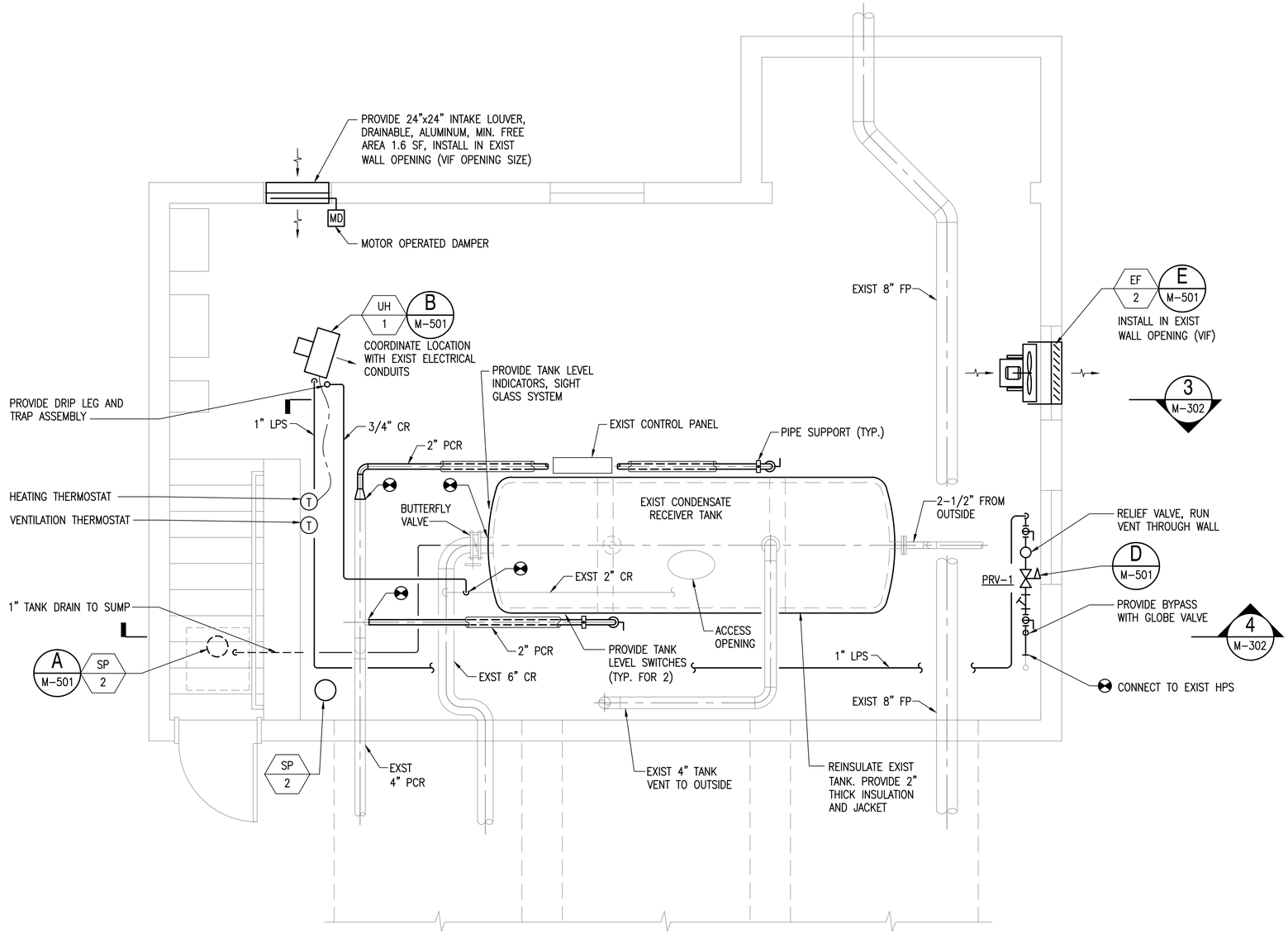

FLOOR PLAN

SCALE: 1/2" = 1'-0"

PLAN NORTH

GRAPHIC SCALE

0 1' 2' 4'

SCALE:1/2"=1'-0"

SYM	DESCRIPTION	DATE	APPR

NAVFAC

COMMONWEALTH OF MASSACHUSETTS
MICHAEL W. TRAVERS
MECHANICAL
No. 48711
REGISTERED PROFESSIONAL ENGINEER

SEAL

ENGINEERS
FST
Since 1914
FAY, SPOFFORD & THORNDIKE
5 BURLINGTON WOODS
BURLINGTON, MA 01803
A/E INFO

APPROVED
FOR COMMANDER NAVFAC
ACTIVITY
SATISFACTORY TO DATE
DES YK DRW YK CHK MWT
PWD-ME DM/POC P. STOCKLESS
BRANCH MANAGER
CHIEF ENG/ARCH
FIRE PROTECTION

DEPARTMENT OF THE NAVY
NAVAL FACILITIES ENGINEERING COMMAND ~ MID-ATLANTIC
PUBLIC WORKS DEPARTMENT – MAINE
NAVAL FACILITIES ENGINEERING COMMAND
NAVAL SHIPYARD – PORTSMOUTH, NH
PORTSMOUTH NAVAL SHIPYARD
KITTERY, MAINE

REPLACE CONDENSATE PUMP STATIONS BUILDINGS 22 & 347

FLOOR PLAN – BUILDING 347

MAXIMO No.: 7725935
EPROJECT NO.: 1331739
CONSTR. CONTR. NO.
NAVFAC DRAWING NO. 12680401
SHEET 14 OF 26
M-102 MS-14-1255

DRAWFORM REVISION: 10 MARCH 2009

FILE NAME: U:\bq-207aa – steam\CADD\Buildings\04_Mechanical\BG-207AA-M-102.dwg LAYOUT NAME: M-102 PLOTTED: Wednesday, August 06, 2014 – 11:43am USER: Wronsk_V

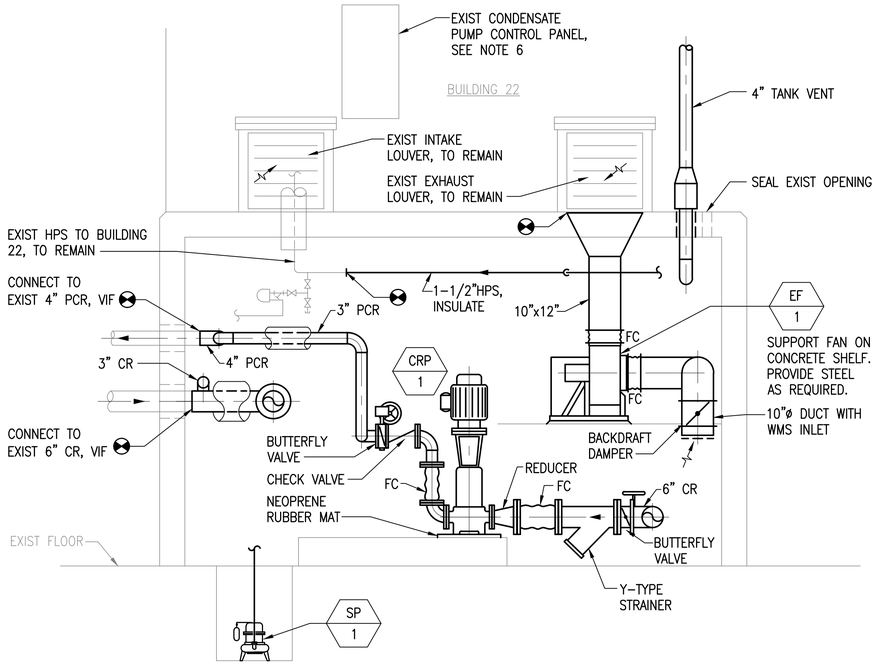

SECTION 1
SCALE: 1/2" = 1'-0" M-101

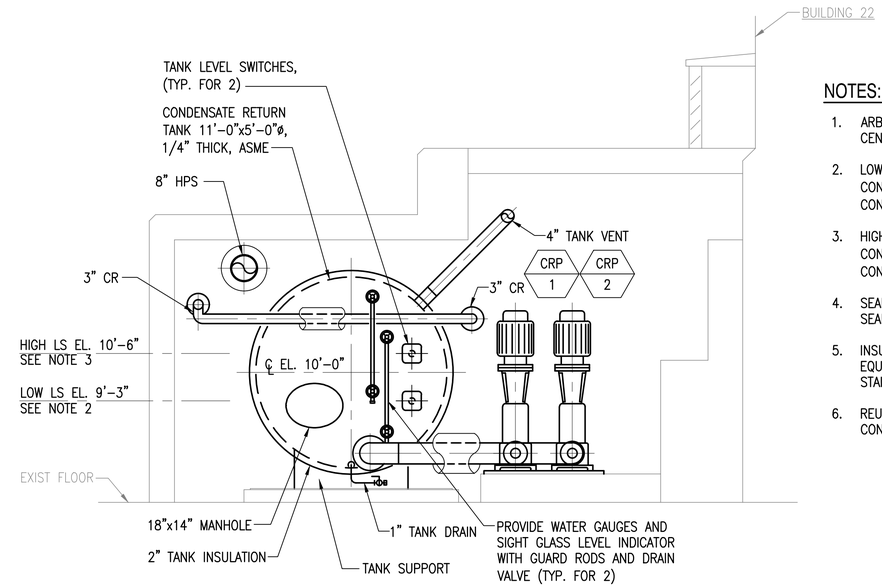

SECTION 2
SCALE: 1/2" = 1'-0" M-101

NOTES:

1. ARBITRARY ELEVATION OF 10'-0" FOR TANK CENTERLINE USED.
2. LOW TANK LEVEL SWITCH TO CLOSE CONTACTS WHEN CONDENSATE LEVEL REACHES 9'-3", AND OPEN CONTACTS WHEN LEVEL DROPS BELOW 9'-3".
3. HIGH TANK LEVEL SWITCH TO CLOSE CONTACTS WHEN CONDENSATE LEVEL REACHES 10'-6", AND OPEN CONTACTS WHEN LEVEL DROPS BELOW 10'-6".
4. SEAL ALL WALL PENETRATIONS WITH RESILIENT SEALANT.
5. INSULATE ALL NEW AND EXISTING PIPING AND EQUIPMENT AS PER SPECIFICATIONS. PROVIDE STAINLESS STEEL JACKETING.
6. REUSE EXIST PUMP CONTROL PANEL. RECONNECT CONTROL WIRING.

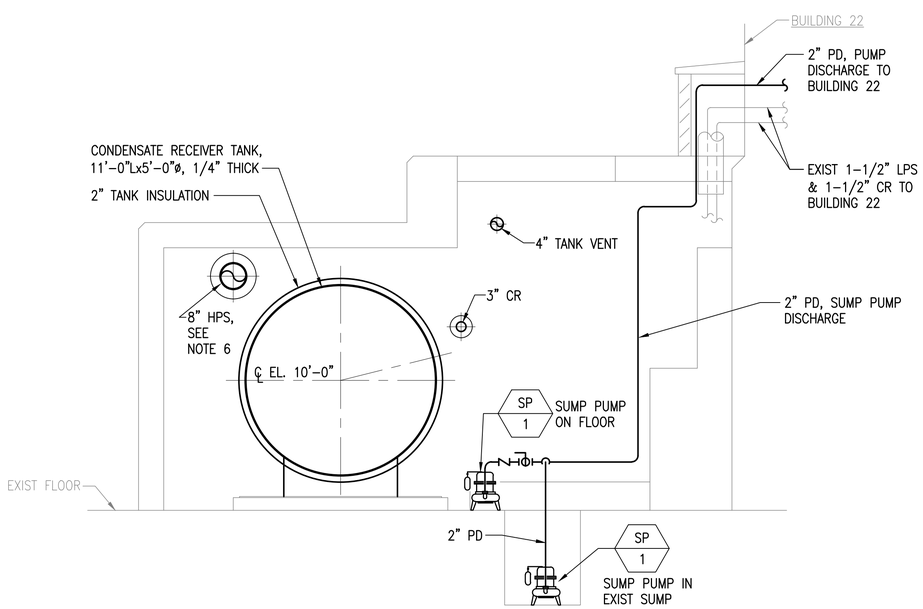

SECTION 3
SCALE: 1/2" = 1'-0" M-101

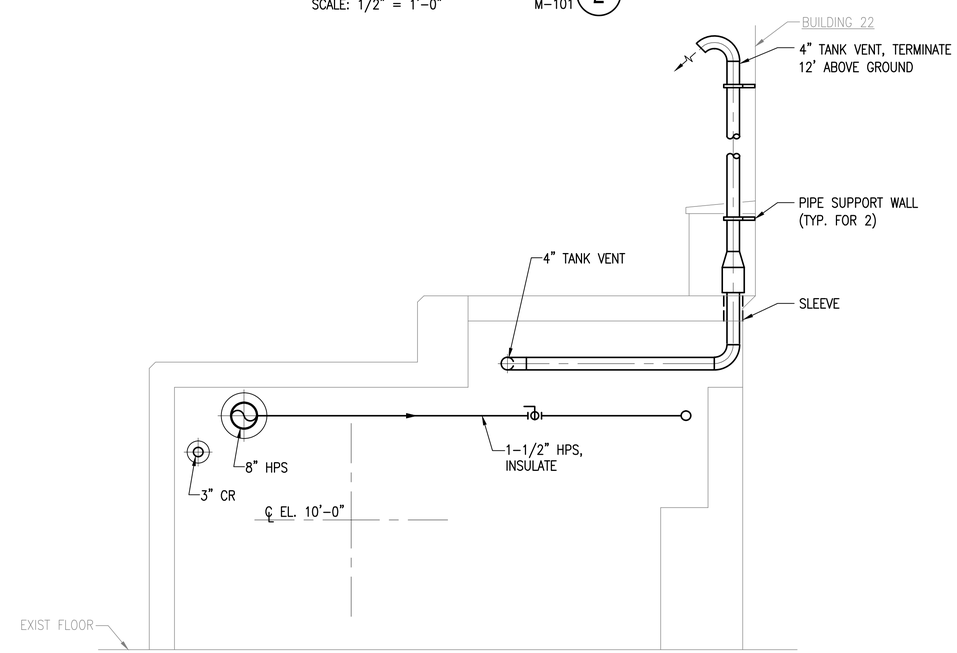

SECTION 4
SCALE: 1/2" = 1'-0" M-101

GRAPHIC SCALE
0 1' 2' 4'
SCALE:1/2"=1'-0"

SYM	DESCRIPTION	DATE	APPR

NAVFAC

COMMONWEALTH OF MASSACHUSETTS MICHAEL W. TRAVERS MECHANICAL No. 48711 REGISTERED PROFESSIONAL ENGINEER
SEAL

ENGINEERS FST Since 1914
FAY, SPOFFORD & THORNDIKE
5 BURLINGTON WOODS BURLINGTON, MA 01803
A/E INFO

APPROVED
FOR COMMANDER NAVFAC
ACTIVITY
SATISFACTORY TO DATE
DES YK DRW YK CHK MWT
PWD-ME EM/POC P. STOCKLESS
BRANCH MANAGER
CHIEF ENG/ARCH
FIRE PROTECTION

DEPARTMENT OF THE NAVY
NAVAL FACILITIES ENGINEERING COMMAND
PUBLIC WORKS DEPARTMENT – MAINE
NAVAL FACILITIES ENGINEERING COMMAND ~ MID-ATLANTIC
NAVAL SHIPYARD – PORTSMOUTH, NH
PORTSMOUTH NAVAL SHIPYARD
KITTERY, MAINE
REPLACE CONDENSATE PUMP STATIONS
BUILDINGS 22 & 347
SECTIONS – BUILDING 22

MAXIMO No.: 7725935
EPROJECT NO.: 1331739
CONSTR. CONTR. NO.
NAVFAC DRAWING NO. 12680402
SHEET 15 OF 26
M-301 MS-14-1256

DRAWFORM REVISION: 10 MARCH 2009

FILE NAME: U:\bq-207aa – steam\CADD\Buildings\04_Mechanical\BQ-207AA-M-301-02.dwg LAYOUT NAME: M-301 PLOTTED: Wednesday, August 06, 2014 – 12:33pm USER: Wronsk_V

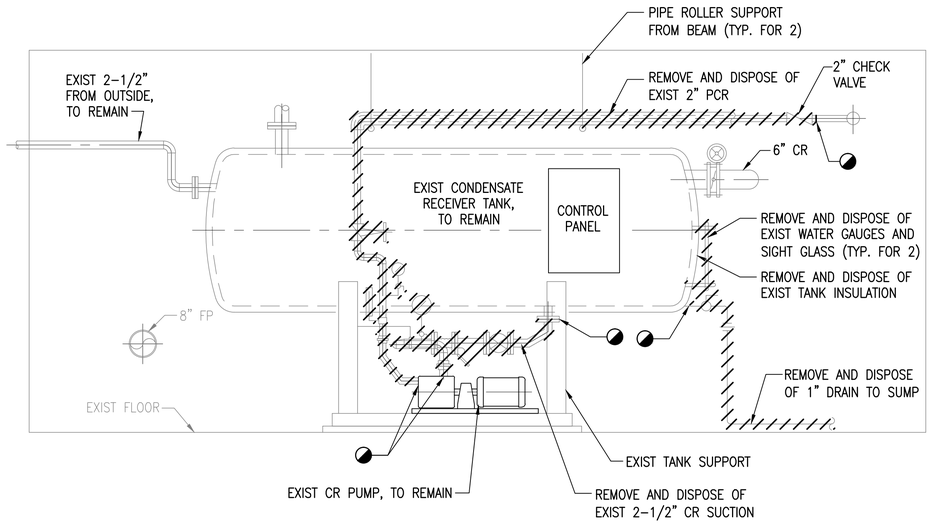

SECTION - DEMOLITION (1)

SCALE: 1/2" = 1'-0" MD102

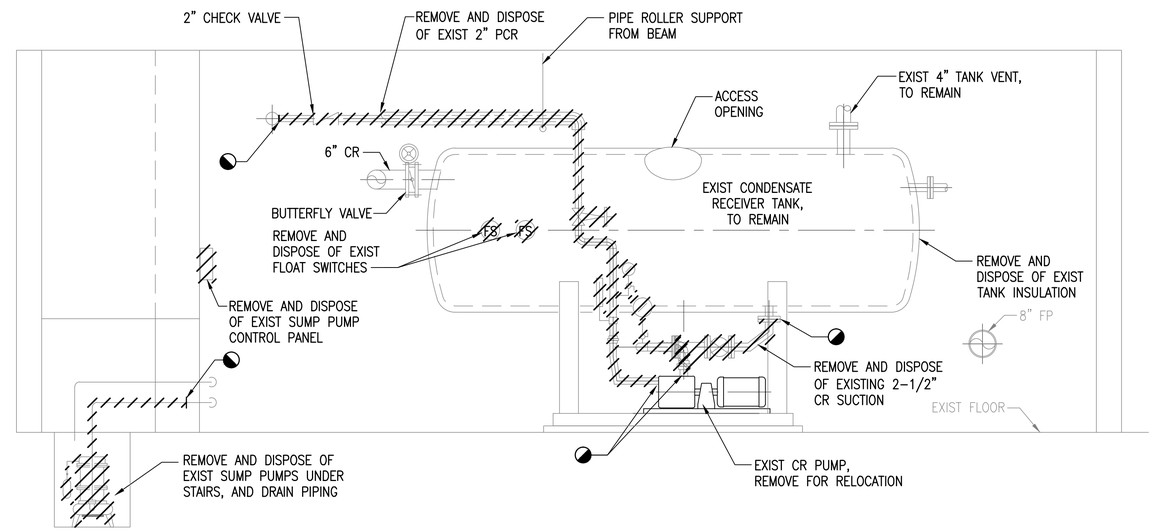

SECTION - DEMOLITION (2)

SCALE: 1/2" = 1'-0" MD102

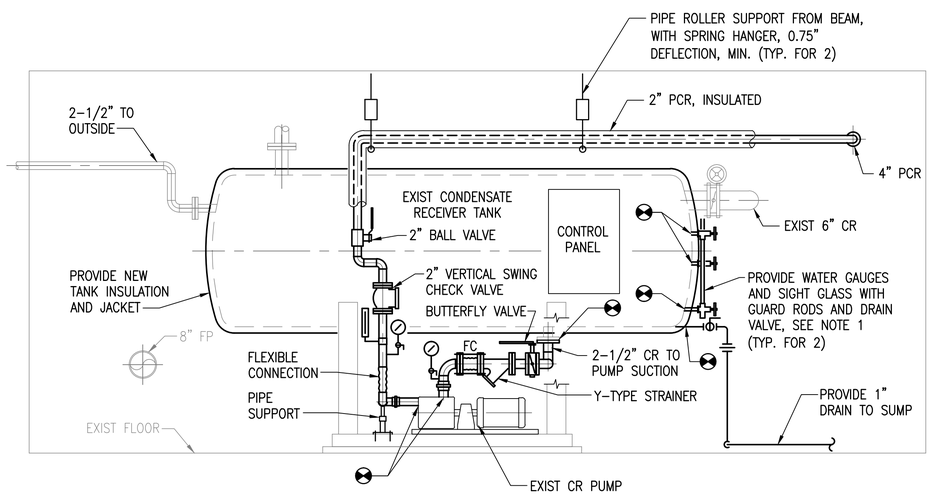

SECTION - NEW WORK (3)

SCALE: 1/2" = 1'-0" M-102

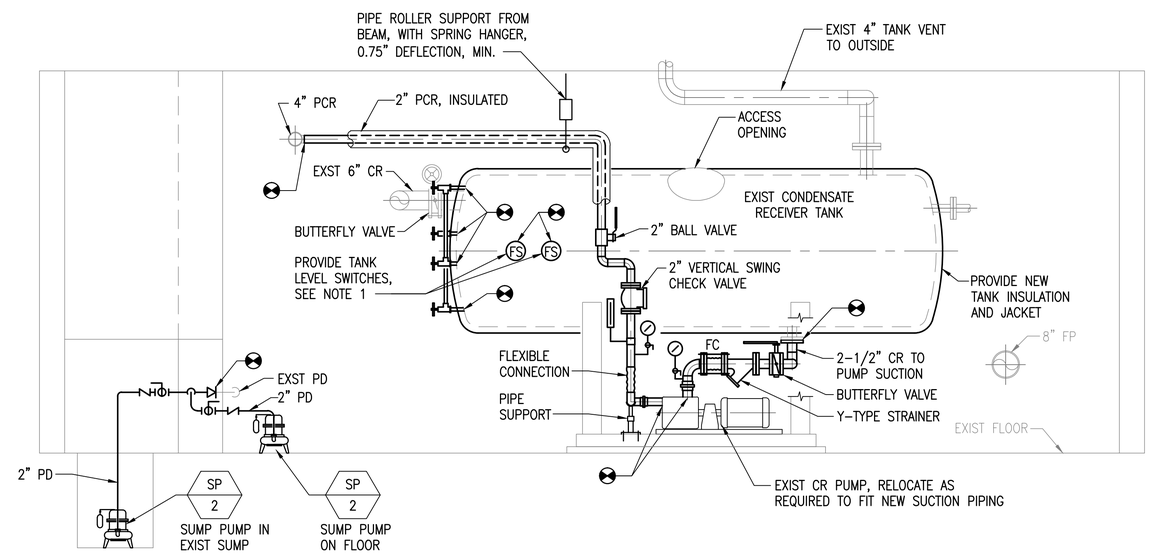

SECTION - NEW WORK (4)

SCALE: 1/2" = 1'-0" M-102

NOTES:

1. TANK LEVEL SWITCHES AND WATER GAUGES SHALL BE INSTALLED IN EXISTING NIPPLES. RESTORE TANK CONNECTIONS BEFORE INSTALLATION.
2. SEAL ALL WALL PENETRATIONS WITH RESILIENT SEALANT.
3. INSULATE ALL NEW AND EXISTING PIPING AND EQUIPMENT AS PER SPECIFICATIONS. PROVIDE STAINLESS STEEL JACKETING.
4. REUSE EXIST PUMP CONTROL PANEL. RECONNECT CONTROL WIRING.

GRAPHIC SCALE

0 1' 2' 4'

SCALE:1/2"=1'-0"

SYM	DESCRIPTION	DATE	APPR

NAVFAC

COMMONWEALTH OF MASSACHUSETTS MICHAEL W. TRAVERS MECHANICAL No. 48711 REGISTERED PROFESSIONAL ENGINEER

SEAL

ENGINEERS FST Since 1914
FAY, SPOFFORD & THORNDIKE
5 BURLINGTON WOODS BURLINGTON, MA 01803
A/E INFO

APPROVED
FOR COMMANDER NAVFAC
ACTIVITY
SATISFACTORY TO DATE
DES YK DRW YK CHK MWT
PWD-ME DM/POC P. STOCKLESS
BRANCH MANAGER
CHIEF ENG/ARCH
FIRE PROTECTION

DEPARTMENT OF THE NAVY
NAVAL FACILITIES ENGINEERING COMMAND
PUBLIC WORKS DEPARTMENT - MAINE
NAVAL FACILITIES ENGINEERING COMMAND – MID-ATLANTIC
NAVAL SHIPYARD – PORTSMOUTH, NH
PORTSMOUTH NAVAL SHIPYARD
KITTERY, MAINE
REPLACE CONDENSATE PUMP STATIONS
BUILDINGS 22 & 347
SECTIONS – BUILDING 347

MAXIMO No.: 7725935
EPROJECT NO.: 1331739
CONSTR. CONTR. NO.
NAVFAC DRAWING NO. 12680403
SHEET 16 OF 26
M-302 MS-14-1257

DRAWFORM REVISION: 10 MARCH 2009

FILE NAME: U:\bq-207aa – steam\CADD\Buildings\04_Mechanical\BQ-207AA-M-301-02.dwg LAYOUT NAME: M-302 PLOTTED: Wednesday, August 06, 2014 – 11:42am USER: Wronsk_V

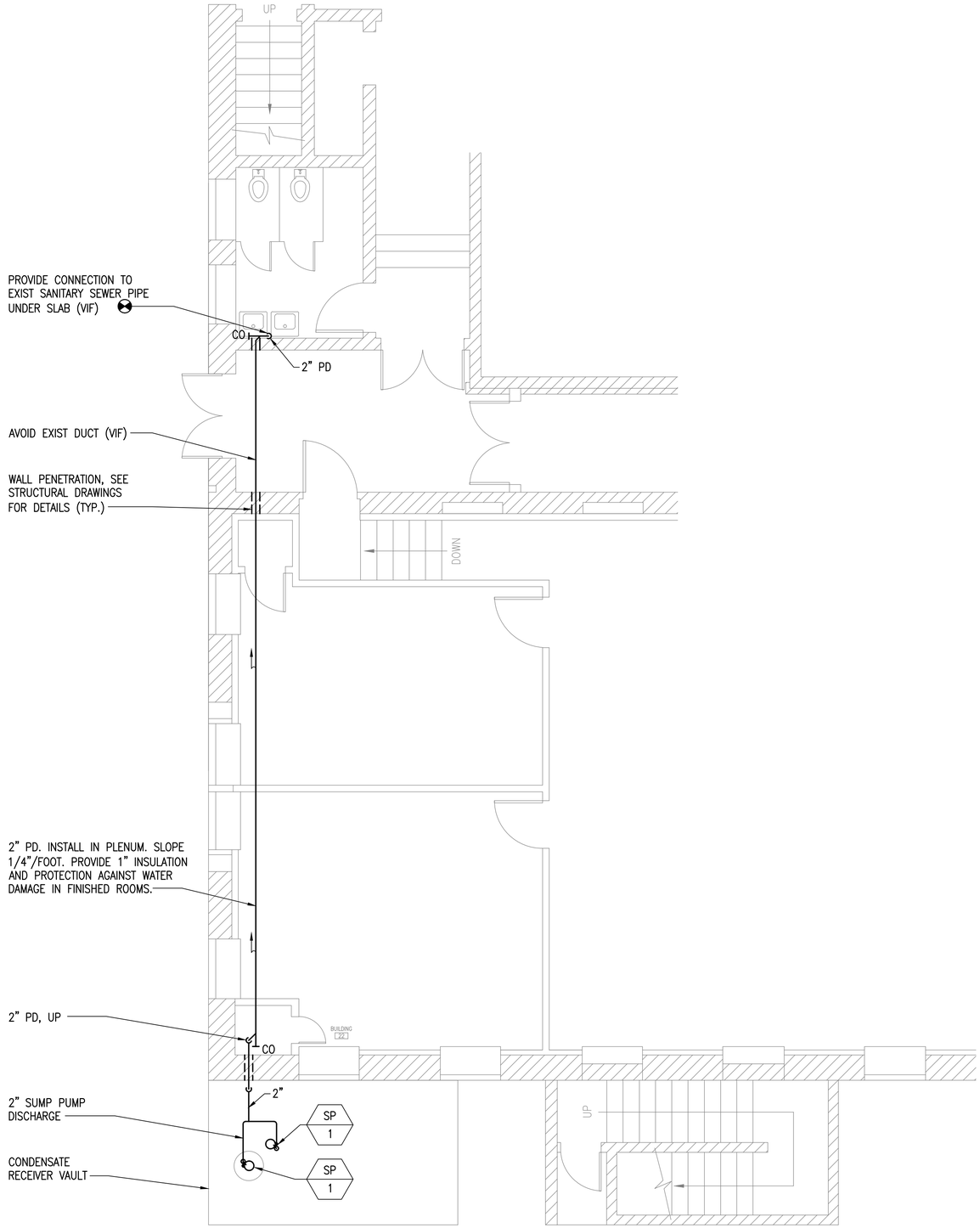

FIRST FLOOR PART PLAN

SCALE: 1/4" = 1'-0"

PLAN NORTH

CONTROLS:

GENERAL

1. SEQUENCE OF OPERATIONS SHALL BE REVERSIBLE UNLESS OTHERWISE SPECIFIED.
2. PROVIDE ALL WIRING AND COMPONENTS SHOWN AND NOT SHOWN TO ACCOMPLISH THE SPECIFIED CONTROL SEQUENCES.
3. ALL TEMPERATURE SENSORS SHALL BE AVERAGING TYPE.

CONDENSATE PUMPS (BUILDING 22)

1. EXISTING CONTROL PANEL ON THE BUILDING 22 SHALL BE REUSED.
2. CONTROLS SHALL SEQUENCE THE RUN/STANDBY PUMPS AUTOMATICALLY. THE PUMPS SHALL ALTERNATE TO ALLOW FOR EQUAL RUN TIME.
3. THE LOW TANK LEVEL SWITCH SHALL CLOSE CONTACTS WHEN CONDENSATE LEVEL REACHES 9'-3", THE LEAD PUMP SHALL AUTOMATICALLY START. THE LEAD PUMP SHALL STOP WHEN TANK LEVEL DROPS BELOW 9'-3" AND LOW LEVEL SWITCH OPENS CONTACT.
4. THE HIGH TANK LEVEL SWITCH SHALL CLOSE CONTACTS WHEN CONDENSATE LEVEL REACHES 10'-6". IF THIS LEVEL HOLDS FOR 15 MINUTES, THE LAG PUMP SHALL AUTOMATICALLY START. THE LAG PUMP SHALL STOP WHEN TANK LEVEL DROPS BELOW 10'-6" AND HIGH LEVEL SWITCH OPENS CONTACT. PROVIDE TIME RELAY.
5. WHEN ENABLED, THE SELECTED PUMP SHALL START AND RUN CONTINUOUSLY. IF FOR ANY REASON ITS STATUS DOES NOT MATCH ITS COMMANDED VALUE AN ALARM SHALL BE GENERATED. THE LAG PUMP SHALL START IF THE LEAD PUMP IS IN ALARM.

CONDENSATE PUMPS (BUILDING 347)

1. EXISTING CONTROL PANEL SHALL BE REUSED.
2. REMAIN EXISTING SEQUENCE OF OPERATIONS.

SUMP PUMPS (BUILDINGS 22 & 347)

1. SUMP PUMPS SHALL BE EQUIPPED WITH FLOAT SWITCHES TO OPERATE THE PUMPS. ALL LEVELS SHALL BE ADJUSTABLE.
2. LEAD PUMP SHALL BE LOCATED IN A SUMP, AND START WHEN WATER LEVEL REACHES 10" AND STOPS WHEN LEVEL DROPS TO 4".
3. LAG PUMP SHALL BE LOCATED ON A FLOOR, AND START WHEN WATER LEVEL REACHES 3" AND WORK CONTINUOUSLY, SIMULTANEOUSLY WITH LEAD PUMP.

UNIT HEATER (BUILDING 347)

1. STEAM UNIT HEATER UH-1 SHALL BE CONTROLLED BY THE SPACE MOUNTED HEATING TEMPERATURE SENSOR (T). WIRE TO A COMMON STAND ALONE DDC CONTROLLER. ON A DROP BELOW THE ROOM SETPOINT 55°F (ADJ.) THE STEAM VALVE SHALL STROKE OPEN AND THE FAN SHALL CYCLE ON. ON A RISE IN TEMPERATURE ABOVE THE SETPOINT 55°F (ADJ.) THE REVERSE SHALL OCCUR.

EXHAUST FANS (BUILDINGS 22 & 347)

1. EXHAUST FANS SHALL HAVE ON-OFF-AUTO SWITCH OUTSIDE OF THE VAULT.
2. IN AUTO MODE, EXHAUST FAN SHALL BE CONTROLLED BY THE SPACE MOUNTED COOLING THERMOSTAT (T). ON A SPACE TEMPERATURE RISE ABOVE THE ROOM SETPOINT 85°F (ADJ.), THE INTAKE AND EXHAUST AIR DAMPERS SHALL OPEN, AND THE FAN SHALL CYCLE ON. ON A DROP IN TEMPERATURE BELOW THE SETPOINT 85°F (ADJ.) THE REVERSE SHALL OCCUR.

ALARMS (BUILDINGS 22 & 347)

1. CONDENSATE PUMPS HIGH TANK ALARM SHALL BE INITIATED AS TANK WATER LEVEL RISES TO HIGH LEVEL SET POINT AND OPENS HIGH LEVEL SWITCH.
2. SUMP WATER LEVEL ALARM SHALL BE GENERATED WHEN LAG PUMP STARTS, AND TWO PUMPS OPERATE SIMULTANEOUSLY.
3. SPACE HIGH TEMPERATURE ALARM SHALL BE INITIATED WHEN ROOM THERMOSTAT DETECTS 95°F (ADJ.)

GRAPHIC SCALE

0 2' 4' 8'

SCALE:1/4"=1'

SYM	DESCRIPTION	DATE	APPR

NAVFAC

COMMONWEALTH OF MASSACHUSETTS
MICHAEL W. TRAVERS
MECHANICAL
No. 48711
REGISTERED PROFESSIONAL ENGINEER
SEAL

ENGINEERS
FST
Since 1914
FAY, SPOFFORD & THORNDIKE
5 BURLINGTON WOODS
BURLINGTON, MA 01803
A/E INFO

APPROVED
FOR COMMANDER NAVFAC
ACTIVITY
SATISFACTORY TO DATE
DES YK DRW YK CHK MWT
PWD-ME DM/POC P. STOCKLESS
BRANCH MANAGER
CHIEF ENG/ARCH
FIRE PROTECTION

DEPARTMENT OF THE NAVY
NAVAL FACILITIES ENGINEERING COMMAND
PUBLIC WORKS DEPARTMENT - MAINE
NAVAL FACILITIES ENGINEERING COMMAND ~ MID-ATLANTIC
NAVAL SHIPYARD - PORTSMOUTH, NH
PORTSMOUTH NAVAL SHIPYARD
KITTERY, MAINE
REPLACE CONDENSATE PUMP STATIONS
BUILDINGS 22 & 347
FIRST FLOOR PART PLAN - BUILDING 22

MAXIMO No.: 7725935
EPROJECT NO.: 1331739
CONSTR. CONTR. NO.
NAVFAC DRAWING NO. 12680404
SHEET 17 OF 26
M-401 MS-14-1258

DRAWFORM REVISION: 10 MARCH 2009

FILE NAME: U:\bq-207aa - steam\CADD\Buildings\04_Mechanical\BQ-207AA-M-401.dwg LAYOUT NAME: M-401 PLOTTED: Wednesday, August 06, 2014 - 11:41am USER: Wronsk_V

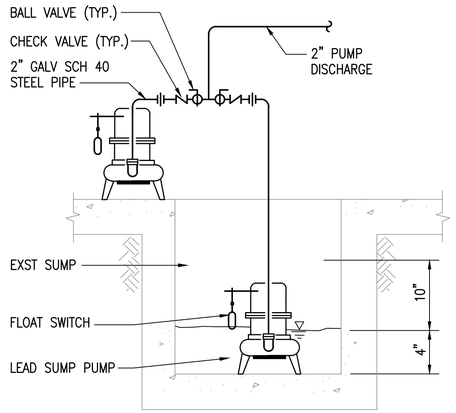

SUMP PUMPS DETAIL (A)

SCALE: NOT TO SCALE M-102,M-301,M-302,M-401

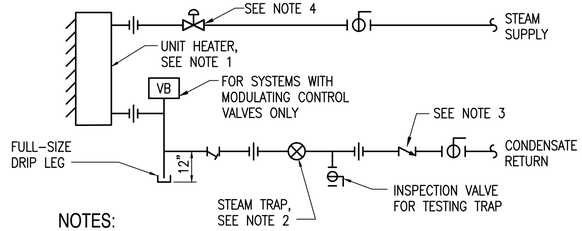

NOTES:

1. HORIZONTAL DISCHARGE LOW PRESSURE STEAM UNIT HEATER
2. TRAP SHALL BE FLOAT-AND-THERMOSTATIC TYPE FOR LOW-PRESSURE AND THERMODYNAMIC TRAP FOR MEDIUM- AND HIGH-PRESSURE SYSTEMS.
3. INSTALL CHECK VALVE FOR MEDIUM- AND HIGH-PRESSURE SYSTEMS OR WHEN CONNECTING TO AN ELEVATED CONDENSATE-RETURN LINE (WITHOUT A MODULATING CONTROL VALVE).
4. REFER TO AUTOMATIC CONTROL DRAWINGS AND SPECIFICATIONS FOR CONTROL REQUIREMENTS.

STEAM UNIT HEATER DETAIL (B)

SCALE: NOT TO SCALE M-102

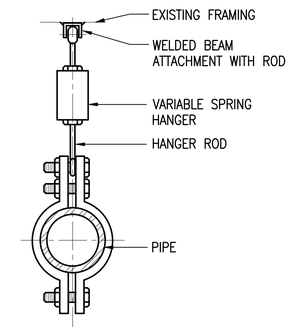

SPRING HANGER DETAIL (C)

SCALE: NOT TO SCALE M-302

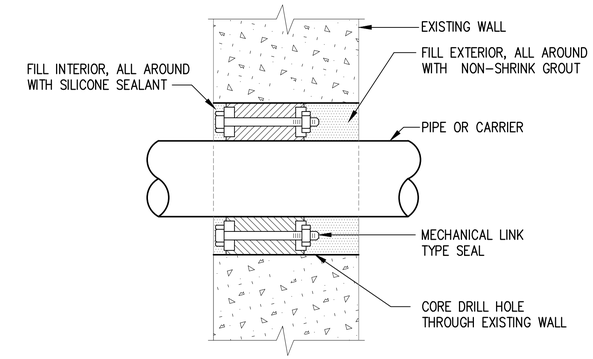

EXISTING CONCRETE WALL PENETRATION DETAIL

SCALE: NOT TO SCALE

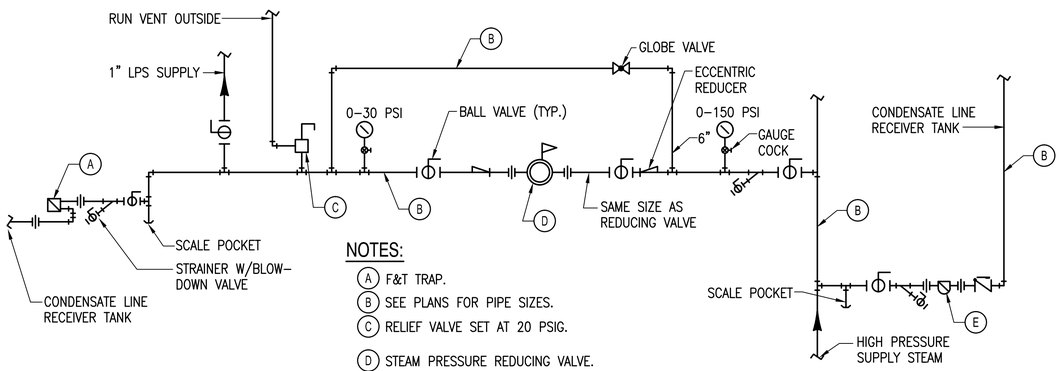

NOTES:

(A) F&T TRAP.
(B) SEE PLANS FOR PIPE SIZES.
(C) RELIEF VALVE SET AT 20 PSIG.
(D) STEAM PRESSURE REDUCING VALVE.
(E) BUCKET TRAP
(F) DETAIL IS DIAGRAMATIC TO SHOW INTENT. COORDINATE COMPONENTS WITH PLANS AND SECTIONS.

STEAM PRESSURE REDUCING STATION DETAIL (D)

SCALE: NOT TO SCALE M-101, M-102, M-301

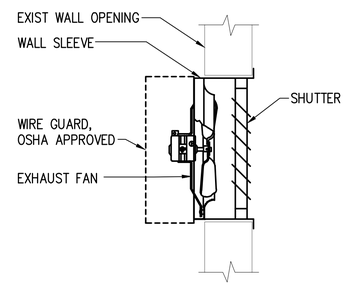

WALL EXHAUST FAN DETAIL (E)

SCALE: NOT TO SCALE M-102

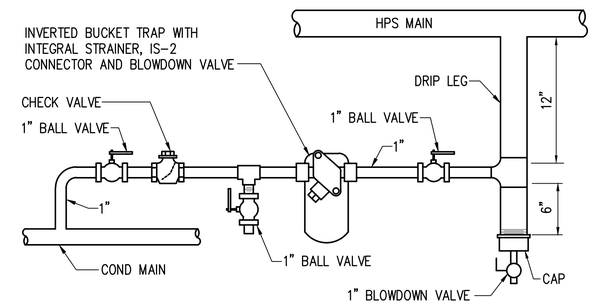

NOTE:
ALL PIPING AND FITTINGS SHALL BE SCHEDULE 80.

TYPICAL TRAP ASSEMBLY DETAIL

SCALE: NOT TO SCALE

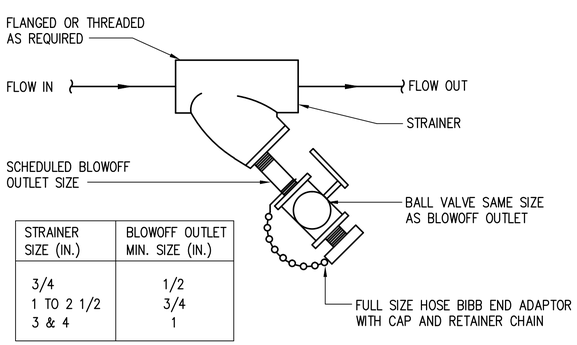

STRAINER SIZE (IN.)	BLOWOFF OUTLET MIN. SIZE (IN.)
3/4	1/2
1 TO 2 1/2	3/4
3 & 4	1

TYPICAL STRAINER ASSEMBLY

SCALE: NOT TO SCALE

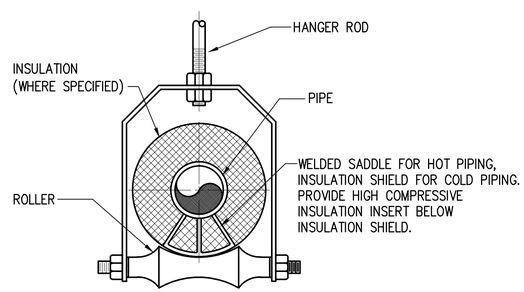

ROLLER PIPING HANGER DETAIL

SCALE: NOT TO SCALE

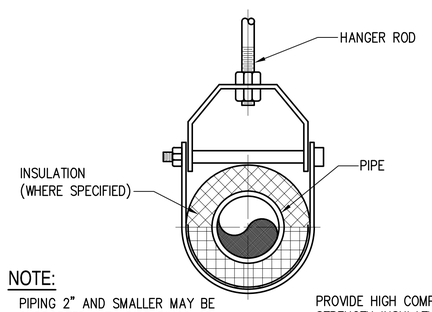

NOTE:
PIPING 2" AND SMALLER MAY BE SUPPORTED WITH PIPE RINGS OR BANDS. ROLLER TYPE HANGERS MAY BE USED INSTEAD OF CLEVIS TYPE.

PROVIDE HIGH COMPRESSIVE STRENGTH INSULATION INSERT AND INSULATION SHIELD AT HANGER.

CLEVIS PIPING HANGER DETAIL

SCALE: NOT TO SCALE

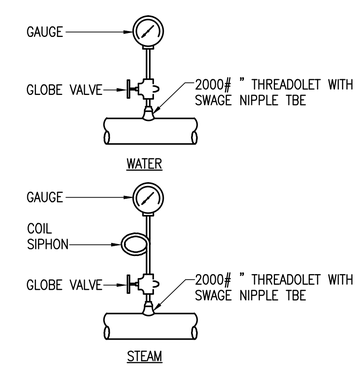

TYPICAL PRESSURE GAUGE DETAIL

SCALE: NOT TO SCALE

APPR	DATE	DESCRIPTION	SYM

NAVFAC

COMMONWEALTH OF MASSACHUSETTS MICHAEL W. TRAVERS MECHANICAL No. 48711 REGISTERED PROFESSIONAL ENGINEER

SEAL

ENGINEERS FST Since 1914
FAY, SPOFFORD & THORNDIKE
5 BURLINGTON WOODS BURLINGTON, MA 01803
A/E INFO

APPROVED
FOR COMMANDER NAVFAC
ACTIVITY
SATISFACTORY TO DATE
DES YK DRW YK CHK MWT
PWD-ME DM/POC P. STOCKLESS
BRANCH MANAGER
CHIEF ENG/ARCH
FIRE PROTECTION

DEPARTMENT OF THE NAVY
NAVAL FACILITIES ENGINEERING COMMAND
NAVAL FACILITIES ENGINEERING COMMAND ~ MID-ATLANTIC
PUBLIC WORKS DEPARTMENT - MAINE
NAVAL SHIPYARD - PORTSMOUTH, NH
PORTSMOUTH NAVAL SHIPYARD
KITTERY, MAINE
REPLACE CONDENSATE PUMP STATIONS
BUILDINGS 22 & 347
DETAILS

MAXIMO No.: 7725935
EPROJECT NO.: 1331739
CONSTR. CONTR. NO.
NAVFAC DRAWING NO. 12680405
SHEET 18 OF 26
M-501 MS-14-1259

DRAWFORM REVISION: 10 MARCH 2009

FILE NAME: U:\bq-207aa - steam\CADD\Buildings\04_Mechanical\BQ-207AA-M-501.dwg LAYOUT NAME: M-501 PLOTTED: Wednesday, August 06, 2014 - 11:40am USER: Wcrosk_V

CONDENSATE PUMPS SCHEDULE

UNIT NO.	LOCATION	TYPE	PUMPS			ELECTRIC					REMARKS
			GPM	FT-HD	RPM	HP	VOLT	PH	HZ	RPM	
CRP-1	BUILDING 22 VAULT	VERTICAL MULTI-STAGE	200	145	3444	15	480	3	60	3450	1 2 3
CRP-2	BUILDING 22 VAULT	VERTICAL MULTI-STAGE	200	145	3444	15	480	3	60	3450	1 2 3

NOTES:

1. CONDENSATE PUMPS SHALL BE STAINLESS STEEL CONSTRUCTION.
2. TWO-STAGE PUMPS, TWO IMPELLERS.
3. PUMPS SHALL BE RATED FOR 248°F MINIMUM.

BASIS OF DESIGN: GRUNDFOS CRN 45-2-2

CRP

RECEIVER TANK SCHEDULE

UNIT NO.	LOCATION	TYPE	SERVICE	LENGTH	DIAMETER	PRECHARGE, PSIG	DESIGN CONDENSATE PRESSURE, PSIG	STEEL THICKNESS, IN	REMARKS
CRT-1	BUILDING 22 VAULT	HORIZONTAL	CONDENSATE	11'-0"	5'-0"	0	125	1/4	1 2 3 4 5 6 7

NOTES:

1. TANK SHALL BE DESIGNED, MANUFACTURED AND TESTED PER ASME SECTION VIII, STAMPED FOR 50 PSI.
2. HORIZONTAL TANK SHALL BE SUITABLE FOR RIGGING THROUGH EXISTING VAULT ROOF IN HORIZONTAL POSITION. PROVIDE LIFTING EYES AT THE ENDS OF HORIZONTAL TANK.
3. PROVIDE MANHOLE 18"x14"
4. RECOMMENDED MINIMUM TANK NOZZLE SIZES:
   - CONDENSATE INTAKE – 6"
   - CONDENSATE DISCHARGE – 6"
   - VENT – 4"
   - DRAIN – 1"
5. PROVIDE AIR FITTING DRAIN VALVE.
6. PROVIDE TANK SUPPORTS
7. TANK SHALL BE PRE-INSULATED PER MANUFACTURERS' RECOMMENDATIONS.

BASIS OF DESIGN: MODEL SHEM FC-10-420 A-113-RC

STEAM UNIT HEATER SCHEDULE

UNIT NO.	LOCATION	CAPACITY BTU/HR	SQ. FT EDR	COND, LB/HR	STEAM PRESSURE PSI	AIR FLOW CFM	RPM	EAT °F	MOTOR HP	ELECTRIC		REMARKS
										VOLT	PH	
UH-1	BUILDING 347	47,000	196	49	10	730	1550	50	1/12	115	1	1 2

NOTES:

1. UNIT HEATER SHALL BE FOR LOW CLEARANCE AREAS.
2. PROVIDE REMOTE ROOM THERMOSTAT

BASIS OF DESIGN: MODINE HC-47

UH

PRESSURE REDUCING REGULATOR SCHEDULE

UNIT NO.	LOCATION	TYPE	SERVICE	FLOW LB/HR	VALVE (IN)	PRESSURE		REMARKS
						INLET (PSI)	OUTLET (PSI)	
PRV-1	BUILDING 347	SELF-CONTAINED	STEAM	50	1/2	125	15	1 2

NOTES:

1. INLET TEMPERATURE 550°F
2. METAL-TO-METAL SEATING FOR STEAM SERVICE

* BASIS OF DESIGN: LESLIE

SUMP PUMPS SCHEDULE

UNIT NO.	LOCATION	PUMP TYPE	SERVICE	FLOW	HEAD	MOTOR	ELECTRICAL DATA			REMARKS
				FLOW (GPM)	HEAD (FEET)	HP	RPM	VOLTS	PHASE	
SP-1	BUILDING 22 VAULT	SUBMERSIBLE	DRAIN	30	40	1/2	3450	115	1	1 2 3 4 5
SP-2	BUILDING 347	SUBMERSIBLE	DRAIN	30	40	1/2	3450	115	1	1 2 3 4 5

NOTES:

1. CORROSION RESISTANT FINISH
2. HIGH TEMPERATURE PUMP
3. THERMAL OVERLOAD MOTOR
4. PROVIDE DEBRIS FILTER
5. PROVIDE 2 FLOAT SWITCHES

DESIGN BASED ON: STA-RITE MODEL HT7

SP

EXHAUST FAN SCHEDULE

UNIT NO.	LOCATION	AIR FLOW CFM	SP IN W.G.	WHEEL SPEED RPM	MOTOR HP	ELECTRIC		BASIS OF DESIGN	REMARKS
						VOLT	PH		
EF-1	BUILDING 22	530	0.75	1725	1/4	120	1	GREENHECK, SWD-8	1 3 4
EF-2	BUILDING 347	1200	0.25	1160	1/6	120	1	GREENHECK, S2-16	2 3 4

NOTES:

1. CENTRIFUGAL FAN
2. SIDEWALL PROPELLER FAN
3. FAN AND MOTOR OPERATED INTAKE DAMPER SHALL BE CONTROLLED AUTOMATICALLY BY THE THERMOSTAT FOR COOLING. WIRE THE LIGHT SWITCH IN PARALLEL WITH THE THERMOSTAT FOR MANUAL "ON" FOR VENTILATION/PURGING.
4. DIRECT DRIVE

EF

PIPING SCHEDULE

TAG	SYSTEM	SYSTEM DESIGN CONDITIONS		REMARKS
		DESIGN		
		TEMP. (DEG F)	PRESSURE CLASS	
LPS	LOW PRESSURE STEAM	228	150	INSULATE FOR THERMAL EFFICIENCY.
HPS	HIGH PRESSURE STEAM	410	150	INSULATE FOR THERMAL EFFICIENCY.
CR	CONDENSATE RETURN	250	150	INSULATE FOR THERMAL EFFICIENCY.
V	TANK VENT	250	150	INSULATE FOR PERSONNEL PROTECTION, IF REQUIRED.
CA	COMPRESSED AIR	100	150	NO INSULATION REQUIRED.

SYM	DESCRIPTION	DATE	APPR

NAVFAC

COMMONWEALTH OF MASSACHUSETTS
MICHAEL W. TRAVERS
MECHANICAL
No. 48711
REGISTERED PROFESSIONAL ENGINEER
SEAL

ENGINEERS
FST
Since 1914
FAY, SPOFFORD & THORNDIKE
5 BURLINGTON WOODS
BURLINGTON, MA 01803
A/E INFO

APPROVED
FOR COMMANDER NAVFAC
ACTIVITY
SATISFACTORY TO DATE
DES YK DRW YK CHK MWT
PWD-ME DM/POC P. STOCKLESS
BRANCH MANAGER
CHIEF ENG/ARCH
FIRE PROTECTION

DEPARTMENT OF THE NAVY
NAVAL FACILITIES ENGINEERING COMMAND
PUBLIC WORKS DEPARTMENT – MAINE
NAVAL FACILITIES ENGINEERING COMMAND ~ MID-ATLANTIC
NAVAL SHIPYARD – PORTSMOUTH, NH
PORTSMOUTH NAVAL SHIPYARD
KITTERY, MAINE
REPLACE CONDENSATE PUMP STATIONS
BUILDINGS 22 & 347
SCHEDULES

MAXIMO No.: 7725935
EPROJECT NO.: 1331739
CONSTR. CONTR. NO.
NAVFAC DRAWING NO.
12680406
SHEET 19 OF 26
M-601 MS-14-1260

DRAWFORM REVISION: 10 MARCH 2009

FILE NAME: U:\bq-207aa – steam\CADD\Buildings\04_Mechanical\BQ-207AA-M-601.dwg LAYOUT NAME: M-601 PLOTTED: Wednesday, August 06, 2014 – 11:49am USER: Wronsk_V