PORTSMOUTH NAVAL SHIPYARD
KITTERY, ME

REPLACE STEAM & CONDENSATE
GOODRICH AVENUE & SICARD STREET

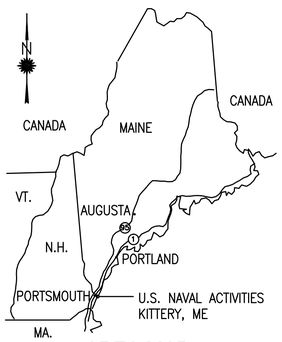

AREA MAP

0 20 40 60 100

SCALE: MILES

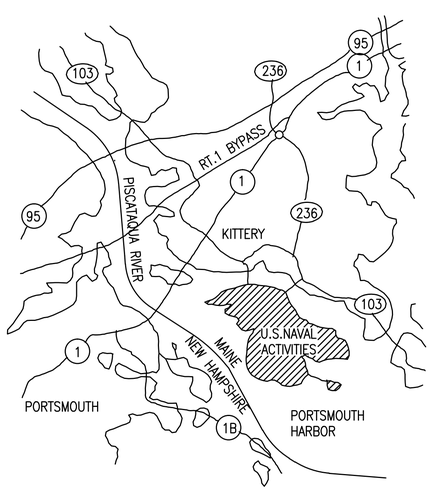

VICINITY MAP

0 500 1000

SCALE: YARDS

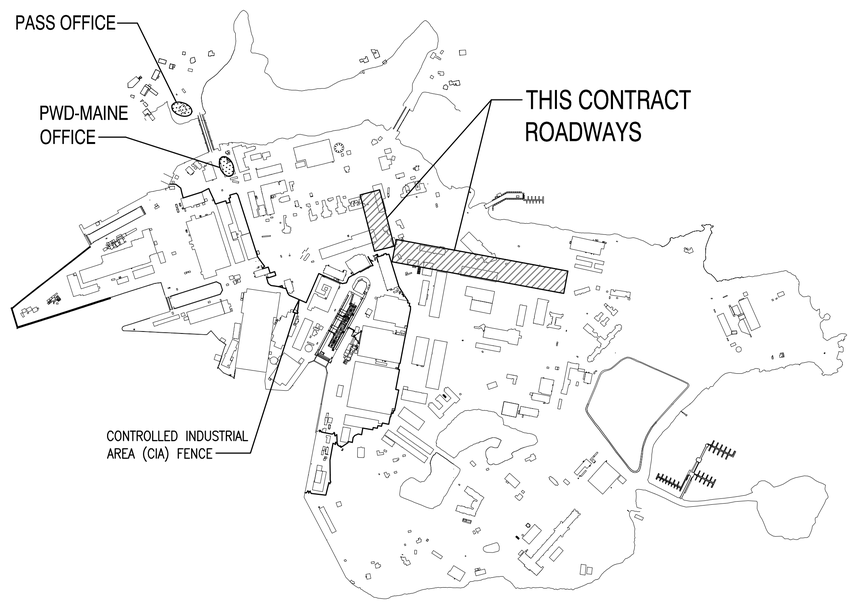

SITE MAP

SCALE: 1"=600'

ELEVATION, SECTION OR DETAIL SYMBOLS

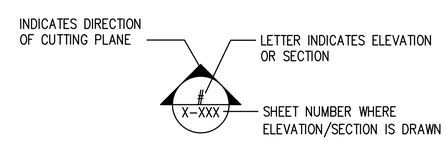

ELEVATION OR SECTION

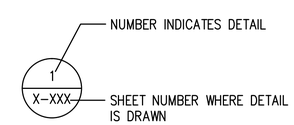

DETAIL

SYM	DESCRIPTION	DATE	APPR

NAVFAC

COMMONWEALTH OF MASSACHUSETTS
VICTOR M. GOVONI
CIVIL
No. 41784
PROFESSIONAL ENGINEER

SEAL

ENGINEERS
FST
Since 1914
FAY, SPOFFORD & THORNDIKE
5 BURLINGTON WOODS
BURLINGTON, MA 01803

A/E INFO

APPROVED

FOR COMMANDER NAVFAC

ACTIVITY

SATISFACTORY TO DATE

DES HBF DRW HBF CHK RGN

PWD-ME DM/POC L. MAHAR

BRANCH MANAGER

CHIEF ENG/ARCH

FIRE PROTECTION

DEPARTMENT OF THE NAVY
NAVAL FACILITIES ENGINEERING COMMAND
PUBLIC WORKS DEPARTMENT – MAINE

NAVAL FACILITIES ENGINEERING COMMAND ~ MID-ATLANTIC
NAVAL SHIPYARD – PORTSMOUTH, NH

PORTSMOUTH NAVAL SHIPYARD
KITTERY, MAINE

REPLACE STEAM & CONDENSATE
GOODRICH AVENUE & SICARD STREET

COVER SHEET

MAXIMO No.: 7725970

EPROJECT NO.: 1331743

CONSTR. CONTR. NO.

NAVFAC DRAWING NO.
12679251

SHEET 1 OF 29

G-001 MS-14-1213

DRAWFORM REVISION: 10 MARCH 2009

FILE NAME: U:\bq-207aa – steam\CADD\Roadways\01_General\BQ-207AA-G-001.dwg LAYOUT NAME: G-001 PLOTTED: Tuesday, August 05, 2014 – 2:19pm USER: Worsk_V

NUMBER	DISCIPLINE NUMBER	NAVFAC DRAWING NUMBER	PWD-ME DRAWING NUMBER	DESCRIPTION
GENERAL				
1	G-001	12679251	MS-14-1213	COVER SHEET
2	G-002	12679252	MS-14-1214	INDEX SHEET
SURVEY				
3	V-101	12679253	MS-14-1215	EXISTING CONDITIONS PLAN – SICARD STREET
4	V-102	12679254	MS-14-1216	EXISTING CONDITIONS PLAN – GOODRICH AVENUE – SHEET 1 OF 2
5	V-103	12679255	MS-14-1217	EXISTING CONDITIONS PLAN – GOODRICH AVENUE – SHEET 2 OF 2
CIVIL				
6	C-001	12679256	MS-14-1218	ABBREVIATIONS AND GENERAL NOTES
7	CD101	12679257	MS-14-1219	SICARD STREET – DEMOLITION PLAN
8	CD102	12679258	MS-14-1220	GOODRICH AVENUE – DEMOLITION PLAN – SHEET 1 OF 2
9	CD103	12679259	MS-14-1221	GOODRICH AVENUE – DEMOLITION PLAN – SHEET 2 OF 2
10	C-101	12679260	MS-14-1222	SICARD STREET
11	C-102	12679261	MS-14-1223	GOODRICH AVENUE – SHEET 1 OF 2
12	C-103	12679262	MS-14-1224	GOODRICH AVENUE – SHEET 2 OF 2
13	C-501	12679263	MS-14-1225	DETAILS – SHEET 1 OF 2
14	C-502	12679264	MS-14-1226	DETAILS – SHEET 2 OF 2
MECHANICAL				
15	M-001	12679265	MS-14-1227	LEGEND, ABBREVIATIONS, GENERAL NOTES & EXPANSION JOINT SCHEDULE
16	MD101	12679266	MS-14-1228	SICARD STREET – DEMOLITION PLAN
17	MD102	12679267	MS-14-1229	GOODRICH AVENUE – DEMOLITION PLAN – SHEET 1 OF 2
18	MD103	12679268	MS-14-1230	GOODRICH AVENUE – DEMOLITION PLAN – SHEET 2 OF 2
19	M-101	12679269	MS-14-1231	SICARD STREET
20	M-102	12679270	MS-14-1232	GOODRICH AVENUE – SHEET 1 OF 3
21	M-103	12679271	MS-14-1233	GOODRICH AVENUE – SHEET 2 OF 3
22	M-104	12679272	MS-14-1234	GOODRICH AVENUE – SHEET 3 OF 3
23	M-105	12679273	MS-14-1235	SERVICE PROFILES AND DETAILS
24	M-301	12679274	MS-14-1236	TRENCH SECTIONS
25	M-401	12679275	MS-14-1237	MANHOLE PART PLANS – SHEET 1 OF 2
26	M-402	12679276	MS-14-1238	MANHOLE PART PLANS – SHEET 2 OF 2
27	M-501	12679277	MS-14-1239	DETAILS – SHEET 1 OF 2
28	M-502	12679278	MS-14-1240	DETAILS – SHEET 2 OF 2
29	M-601	12679279	MS-14-1241	PIPING CONNECTIONS TO BUILDINGS – PLAN AND DIAGRAMS

SYM	DESCRIPTION	DATE	APPR

NAVFAC

COMMONWEALTH OF MASSACHUSETTS
VICTOR M. GOVONI
CIVIL
No. 41704
PROFESSIONAL ENGINEER
SEAL

ENGINEERS
FST
Since 1914
FAY, SPOFFORD & THORNDIKE
5 BURLINGTON WOODS
BURLINGTON, MA 01803
A/E INFO

APPROVED
FOR COMMANDER NAVFAC

ACTIVITY
SATISFACTORY TO DATE

DES HBF | DRW HBF | CHK RGN
PWD-ME DM/POC L. MAHAR
BRANCH MANAGER
CHIEF ENG/ARCH
FIRE PROTECTION

DEPARTMENT OF THE NAVY
NAVAL FACILITIES ENGINEERING COMMAND
PUBLIC WORKS DEPARTMENT – MAINE
NAVAL FACILITIES ENGINEERING COMMAND – MID-ATLANTIC
NAVAL SHIPYARD – PORTSMOUTH, NH
PORTSMOUTH NAVAL SHIPYARD
KITTERY, MAINE
REPLACE STEAM & CONDENSATE
GOODRICH AVENUE & SICARD STREET
INDEX SHEET

MAXIMO No.: 7725970
EPROJECT NO.: 1331743
CONSTR. CONTR. NO.
NAVFAC DRAWING NO. 12679251
SHEET 2 OF 29
G-002 | MS-14-1213

DRAWFORM REVISION: 10 MARCH 2009

FILE NAME: U:\bq-207aa – steam\CADD\Roadways\01_General\BQ-207AA-G-002.dwg LAYOUT NAME: G-002 PLOTTED: Tuesday, August 05, 2014 – 2:18pm USER: Wronsk_V

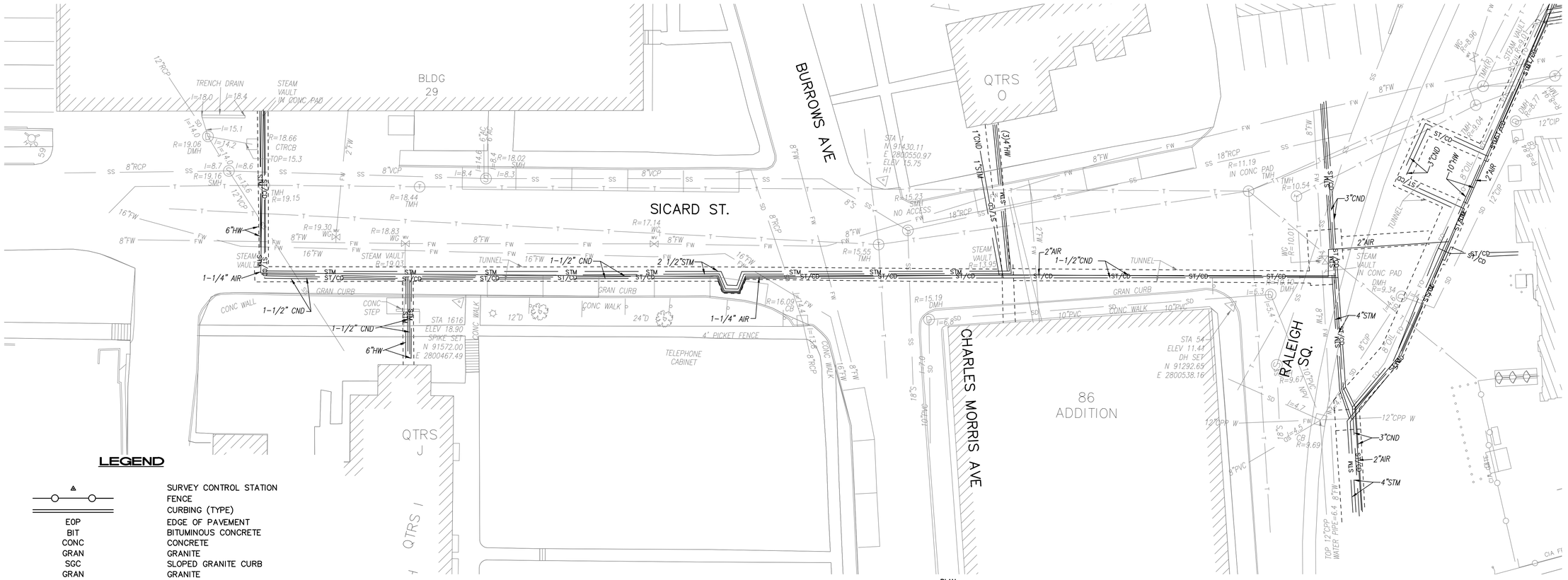

SICARD STREET

SCALE: 1"=20'

PLAN NORTH

LEGEND

	SURVEY CONTROL STATION
	FENCE
	CURBING (TYPE)
EOP	EDGE OF PAVEMENT
BIT	BITUMINOUS CONCRETE
CONC	CONCRETE
GRAN	GRANITE
SGC	SLOPED GRANITE CURB
GRAN	GRANITE
ELEC	ELECTRIC
MH	MANHOLE
HH	HANDHOLE
EM	ELECTRIC METER
	HYDRANT
FA	FIRE ALARM
	SIGN
	LIGHT POLE
	WATER GATE
	GAS GATE
ST	STEAM MANHOLE
T	TELEPHONE MANHOLE
D	DRAIN MANHOLE
E	ELECTRIC MANHOLE
S	SEWER MANHOLE
CB	CATCH BASIN
R	RIM ELEVATION
I	INVERT ELEVATION
(R)	RECORD
FW	FRESH WATER
E	ELECTRICAL LINE
SD	DRAIN LINE
FW	WATER LINE
T	TELEPHONE LINE
SS	SEWER LINE
STM	STEAM LINE
CA	COMPRESSED AIR LINE
ST/CD	STEAM/CONDENSING LINE
VCP	VITREOUS CLAY PIPE
CPP	CORRUGATED PLASTIC PIPE
AC	ASBESTOS CONCRETE
RCP	REINFORCED CONCRETE PIPE
CIP	CAST IRON PIPE
PVC	POLYVINYL CHLORIDE
TOS	TOP OF SILT
TOE	TOP OF ELBOW
NPV	NO PIPE VISIBLE
	DECIDUOUS TREE/SIZE

NOTES:

1. THIS PLAN DEPICTS EXISTING SITE CONDITIONS BASED ON A SURVEY MADE APRIL 16–18, 2014, AND A DIGITAL FILE OF THE BASE PLAN OF THE PORTSMOUTH NAVAL SHIPYARD, (REFERENCE NO. 1).
2. THE COORDINATES, IN US SURVEY FEET, ARE REFERENCED TO THE NORTH AMERICAN DATUM OF 1983 (NAD 83), MAINE STATE PLANE COORDINATES (WEST ZONE), BASED UPON SURVEY CONTROL ESTABLISHED BY SURVEYING AND MAPPING CONSULTANTS FOR ITS EXISTING CONDITIONS PLAN FOR THE PORTAL CRANE RAIL STUDY (REFERENCE NO. 2).
3. ELEVATIONS, IN US SURVEY FEET, ARE REFERENCED TO THE NORTH AMERICAN VERTICAL DATUM OF 1988 (NAVD88) BASED UPON THE ABOVE–NOTED PORTAL CRANE RAIL STUDY SURVEY CONTROL.
4. SUBSURFACE UTILITY LINES AND FEATURES SHOWN HEREON WERE COMPILED FROM FIELD EVIDENCE AND THE PORTSMOUTH NAVAL SHIPYARD BASE PLAN (SEE NOTE 1), AND THEIR LOCATIONS ARE ONLY APPROXIMATE. ACTUAL LOCATIONS MUST BE DETERMINED IN THE FIELD.
5. BEFORE CONSTRUCTION, ALL UTILITIES, PUBLIC AND PRIVATE, MUST BE NOTIFIED.
6. THE CONTRACTOR / EXCAVATOR SHALL NOTIFY DIG–SAFE (1–888–344–7233) AT LEAST 14 CALENDAR DAYS, BUT NOT MORE THAN 30 CALENDAR DAYS PRIOR TO THE COMMENCEMENT OF EXCAVATION OR GROUND PENETRATING ACTIVITY. THE CONTRACTOR SHALL FULLY COMPLY WITH STATE OF MAINE DIG–SAFE LAW. (SEE MAINE REVISED STATUES ANNOTATED, TITLE 23, SECTION 3360–A).

REFERENCES:

1. A DIGITAL FILE OF THE BASE PLAN OF THE PORTSMOUTH NAVAL SHIPYARD, V–XP–BASE.DWG DATED APRIL 11, 2014.
2. DEPARTMENT OF THE NAVY NAVAL FACILITIES ENGINEERING COMMAND MID–ATLANTIC, PUBLIC WORKS DEPARTMENT – MAINE PORTSMOUTH NAVAL SHIPYARD, KITTERY, MAINE PORTAL CRANE RAIL STUDY, PHASE 2 CONTRACT NO. N40085–09–D–9411 EXISTING CONDITIONS PLAN, 9 SHEETS SCALE: 1"=20' DATED: FEBRUARY 27, 2014 PREPARED BY SURVEYING AND MAPPING CONSULTANTS DWG. NO. 114200/W14200 PNSY FPR3 2–27–2014.DWG.

KEY PLAN

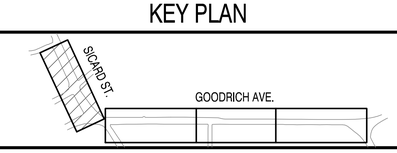

GRAPHIC SCALE

0 10' 20' 40'

SCALE:1"=20'

APPR	DATE	DESCRIPTION	STM

NAVFAC

COMMONWEALTH OF MASSACHUSETTS ROBERT G. NJOROGE CIVIL No. 49642 REGISTERED PROFESSIONAL ENGINEER

SEAL

ENGINEERS FST Since 1914

FAY, SPOFFORD & THORNDIKE
5 BURLINGTON WOODS
BURLINGTON, MA 01803

A/E INFO

APPROVED

FOR COMMANDER NAVFAC

ACTIVITY

SATISFACTORY TO DATE

DES SES | DRW SES | CHK SES

PWD–ME DM/POC L. MAHAR

BRANCH MANAGER

CHIEF ENG/ARCH

FIRE PROTECTION

DEPARTMENT OF THE NAVY
NAVAL FACILITIES ENGINEERING COMMAND ~ MID-ATLANTIC
PUBLIC WORKS DEPARTMENT – MAINE
NAVAL SHIPYARD – PORTSMOUTH, NH
PORTSMOUTH NAVAL SHIPYARD KITTERY, MAINE
REPLACE STEAM & CONDENSATE
GOODRICH AVENUE & SICARD STREET
EXISTING CONDITIONS PLAN – SICARD STREET

MAXIMO No.: 7725970

EPROJECT NO.: 1331743

CONSTR. CONTR. NO.

NAVFAC DRAWING NO. 12679253

SHEET 3 OF 29

V-101 | MS-14-1215

DRAWFORM REVISION: 10 MARCH 2009

FILE NAME: U:\bq-207aa – steam\CADD\Roadways\06_Survey\BQ-207AA-V-101-03.dwg LAYOUT NAME: V-101 PLOTTED: Tuesday, August 05, 2014 – 2:25pm USER: Wronsk_V

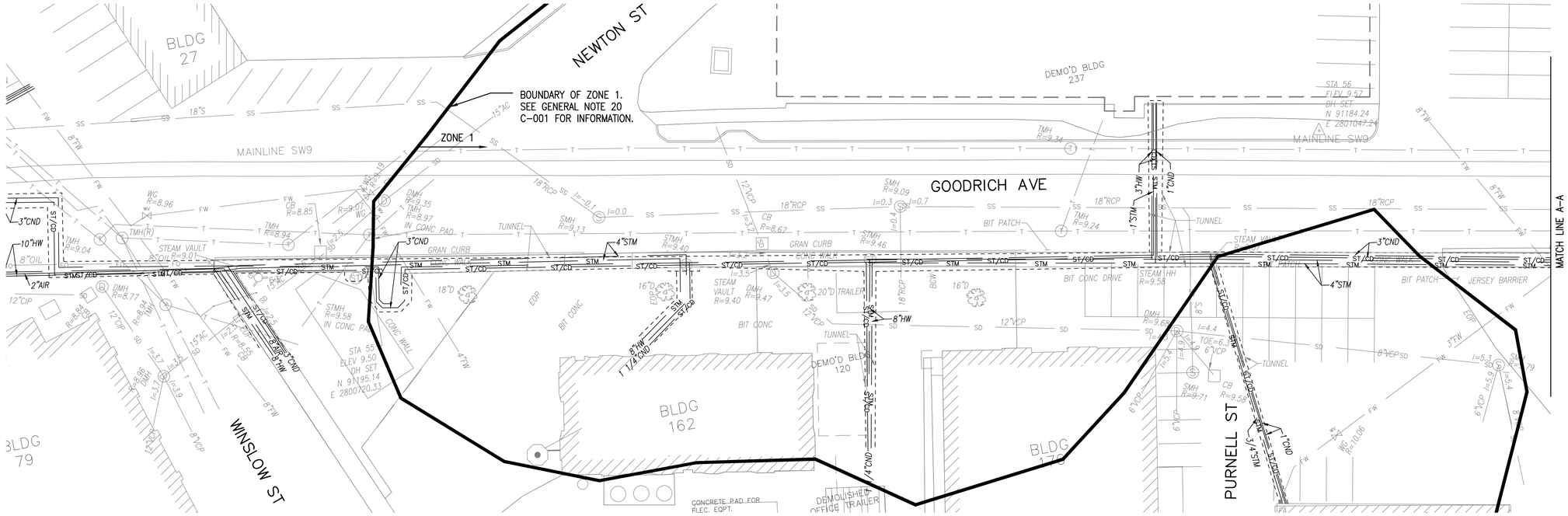

GOODRICH AVENUE
SCALE: 1"=20'

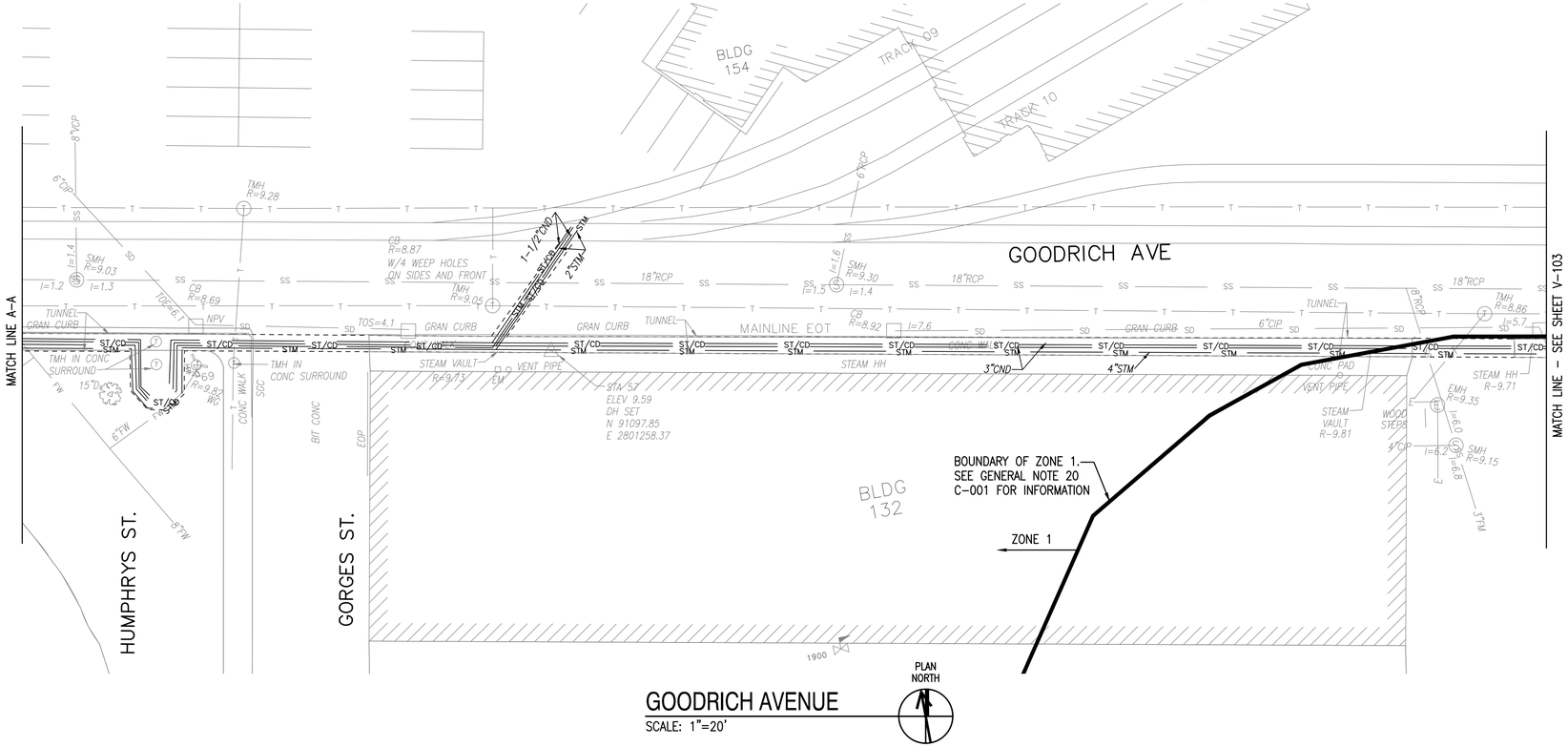

GOODRICH AVENUE
SCALE: 1"=20'

KEY PLAN

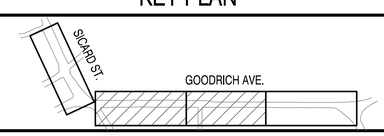

GRAPHIC SCALE

0 10' 20' 40'

SCALE:1"=20'

SYM	DESCRIPTION	DATE	APPR

NAVFAC

COMMONWEALTH OF MASSACHUSETTS
ROBERT G. NJOROGE
CIVIL
No. 49642
REGISTERED PROFESSIONAL ENGINEER
SEAL

ENGINEERS
FST
Since 1914
FAY, SPOFFORD & THORNDIKE
5 BURLINGTON WOODS
BURLINGTON, MA 01803
A/E INFO

APPROVED

FOR COMMANDER NAVFAC

ACTIVITY

SATISFACTORY TO DATE

DES SES | DRW SES | CHK SES
PWD-ME DM/POC L. MAHAR
BRANCH MANAGER
CHIEF ENG/ARCH
FIRE PROTECTION

DEPARTMENT OF THE NAVY
NAVAL FACILITIES ENGINEERING COMMAND
PUBLIC WORKS DEPARTMENT - MAINE
NAVAL FACILITIES ENGINEERING COMMAND ~ MID-ATLANTIC
NAVAL SHIPYARD - PORTSMOUTH, NH
PORTSMOUTH NAVAL SHIPYARD
KITTERY, MAINE

REPLACE STEAM & CONDENSATE
GOODRICH AVENUE & SICARD STREET
EXISTING CONDITIONS PLAN -
GOODRICH AVENUE - SHEET 1 OF 2

MAXIMO No.: 7725970
EPROJECT NO.: 1331743
CONSTR. CONTR. NO.
NAVFAC DRAWING NO. 12679254
SHEET 4 OF 29
V-102 | MS-14-1216

DRAWFORM REVISION: 10 MARCH 2009

FILE NAME: U:\bq-207aa - steam\CADD\Roadways\06_Survey\BQ-207AA-V-101-03.dwg LAYOUT NAME: V-102 PLOTTED: Tuesday, August 05, 2014 - 2:24pm USER: Wronsk_V

GOODRICH AVENUE

SCALE: 1"=20'

PLAN NORTH

KEY PLAN

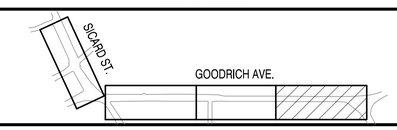

GRAPHIC SCALE

0 10' 20' 40'

SCALE:1"=20'

STM	DESCRIPTION	DATE	APPR

NAVFAC

COMMONWEALTH OF MASSACHUSETTS
ROBERT G. NJOROGE
CIVIL
No. 49642
REGISTERED PROFESSIONAL ENGINEER
SEAL

ENGINEERS
FST
Since 1914
FAY, SPOFFORD & THORNDIKE
5 BURLINGTON WOODS
BURLINGTON, MA 01803
A/E INFO

APPROVED
FOR COMMANDER NAVFAC
ACTIVITY
SATISFACTORY TO DATE
DES SES | DRW SES | CHK SES
PWD-ME DM/POC L. MAHAR
BRANCH MANAGER
CHIEF ENG/ARCH
FIRE PROTECTION

DEPARTMENT OF THE NAVY
NAVAL FACILITIES ENGINEERING COMMAND
PUBLIC WORKS DEPARTMENT – MAINE
NAVAL FACILITIES ENGINEERING COMMAND ~ MID-ATLANTIC
NAVAL SHIPYARD – PORTSMOUTH, NH
PORTSMOUTH NAVAL SHIPYARD
KITTERY, MAINE

REPLACE STEAM & CONDENSATE
GOODRICH AVENUE & SICARD STREET

EXISTING CONDITIONS PLAN –
GOODRICH AVENUE – SHEET 2 OF 2

MAXIMO No.: 7725970
EPROJECT NO.: 1331743
CONSTR. CONTR. NO.
NAVFAC DRAWING NO.
12679255
SHEET 5 OF 29
V-103 | MS-14-1217

DRAWFORM REVISION: 10 MARCH 2009

FILE NAME: U:\pd-207aa – steam\CADD\Roadways\06_Survey\BG-207AA-V-101-03.dwg LAYOUT NAME: V-103 PLOTTED: Tuesday, August 05, 2014 – 2:23pm USER: Wcrosk_V

GENERAL NOTES:

1. STRUCTURAL DESIGN COMPLIES WITH THE REQUIREMENTS OF:

   A. 2012 INTERNATIONAL BUILDING CODE.

   B. UFC 1–200–01, GENERAL BUILDING REQUIREMENTS, 1 JULY 2013, WITH CHANGE 1, 1 SEPTEMBER 2013.

   C. UFC 3–301–01, STRUCTURAL ENGINEERING, 1 JUNE 2013, WITH CHANGE 1, 15 MAY 2014.

2. ALL DIMENSIONS, ELEVATIONS AND CONDTIONS SHALL BE VERIFIED IN THE FIELD. ANY DISCREPANCIES SHALL BE BROUGHT TO THE ATTENTION OF THE CONTRACTING OFFICER BEFORE ORDERING MATERIALS AND PROCEEDING WITH THE AFFECTED PART OF THE WORK.

3. THE EXACT SIZE & LOCATION OF ALL EXISTING UTILITIES SHALL BE FIELD VERIFIED BY THE CONTRACTOR PRIOR TO START OF CONSTRUCTION. CONTRACTOR SHALL TAKE CARE TO PROTECT UTILITIES IN THE WORK AREA. ALL CONSTRCTION SHALL BE COORDINATED WITH THE CONTRACTING OFFICE.

4. UTILITIES LOCATED WITHIN AND UNDER CONCRETE SLABS OR PARKING AREAS, AND THE LIKE, ARE EXTREMELY DIFFICULT TO IDENTIFY. WHENEVER CONTRACT WORK INVOLVES CHIPPING, SAW CUTTING, OR CORE DRILLING THROUGH CONCRETE, BITUMINOUS ASPHALT OR OTHER IMPERVIOUS SURFACES, THE CONTRACTOR SHALL PROVIDE THE SERVICES OF A THIRD PARTY, INDEPENDENT, PRIVATE LOCATING COMPANY TO LOCATE ANY UTILITIES WITHIN THE LIMITS OF WORK. THE THIRD PARTY, INDEPENDENT, PRIVATE LOCATING COMPANY SHALL LOCATE UTILITY DEPTH BY USE OF GROUND PENETRATING RADAR (GPR), X–RAY, BORE SCOPE, OR ULTRASOUND PRIOR TO THE START OF DEMOLITION AND CONSTRUCTION. OUTAGES TO ISOLATE UTILITY SYSTEMS MUST BE USED IN CIRCUMSTANCES WHERE UTILITIES ARE UNABLE TO BE POSITIVELY IDENTIFIED. THE USE OF HISTORICAL DRAWINGS DOES NOT ALLEVIATE THE CONTRACTOR FROM MEETING THIS REQUIREMENT.

5. THE CONTRACTOR SHALL VERIFY THE LOCATION OF UNDERGROUND UTILITIES WITHIN THE LIMITS OF WORK PRIOR TO COMMENCING ANY EXCAVATION OR GROUND PENETRATING WORK. THE CONTRACTOR SHALL NOTIFY "DIG SAFE" (1–888–3444–7233) AT LEAST 14 CALENDAR DAYS PRIOR TO COMMENCEMENT OF THE EXCAVATION OR GROUND PENETRATING ACTIVITY. THE CONTRACTOR/EXCAVATOR SHALL FULLY COMPLY WITH THE STATE OF MAINE "DIG SAFE" LAW (TITLE 23. MRSA 33 60–A).

6. TAKE ALL NECESSARY PRECAUTIONS TO PROTECT EXISTING UTILTIES AND MAINTAIN UNINTERRUPTED SERVICE. ANY DAMAGE INCURRED SHALL BE REPAIRED IMMEDIATELY AT THE CONTRACTOR'S EXPENSE TO THE SATISFACTION OF THE CONTRACTING OFFICER. NOTIFY THE CONTRACTING OFFICER A MINIMUM OF 15 DAYS IN ADVANCE OF ANY OUTAGES.

7. IT IS THE CONTRACTOR'S SOLE RESPONSIBILITY TO DETERMINE ERECTION PROCEDURES AND SEQUENCE TO ENSURE THE SAFETY OF THE FACILTIES AND THEIR COMPONENTS DURING DEMOLITION AND ERECTION UNLESS OTHERWISE DIRECTED. THIS INCLUDES THE ADDITION OF NECESSARY SHORING, SHEETING, TEMPORARY BRACING, GUYS OR TIEDOWNS. SUCH MATERIAL SHALL REMAIN THE PROPERTY OF THE CONTRACTOR AFTER THE COMPLETION OF THE PROJECTS.

8 METHODS OF DEMOLITION, CONSTRUCTION, AND ERECTION ARE THE CONTRACTOR'S RESPONSIBILITY UNLESS OTHERWISE SPECIFIED.

9. IT IS THE CONTRACTOR'S RESPONSIBILITY TO PROVIDE AND MAINTAIN ENVIRONMENTAL CONTROLS AS REQUIRED BY FEDERAL, STATE AND LOCAL REGULATIONS AND PERMITS. ENVIRONMENTAL CONTROLS SHALL INCLUDE BUT NOT BE LIMITED TO TURBIDITY, PH AND DUST. PROPER EROSION CONTROL MEASURES SHALL BE IN PLACE PRIOR TO CONSTRUCTION AND SHALL BE MAINTAINED THROUGH SITE STABILIZATION. CONSTRUCTION ACTIVITIES SHALL BE CONDUCTED IN ACCORDANCE WITH MAINE'S BEST MANAGEMENT PRACTICES FOR EROSION AND SEDIMENT CONTROL.

10. ALL APPLICABLE FEDERAL, STATE AND LOCAL REGULATIONS AND PERMITS SHALL BE FOLLOWED, INCLUDING THE FEDERAL DEPARTMENT OF LABOR, OCCUPANTIONAL SAFETY AND HEALTH ACT, US ARMY CORPS OF ENGINEERS, AND STATE/LOCAL WETLAND CONTROL.

11. THE CONTRACTOR SHALL NOT DEVIATE FROM THE DESIGN DRAWINGS WITHOUT WRITTEN APPROVAL OF THE CONTRACTING OFFICER.

12. SHOP DRAWINGS SHALL BE CHECKED BY THE CONTRACTOR PRIOR TO SUBMISSION FOR CONTRACTING OFFICER'S APPROVAL.

13. BOTTOM OF TUNNELS ARE CONSIDERED TO BE BELOW MEAN HIDE TIDE LEVEL WHICH IS CONSIDERED AS GROUND WATER LEVEL PER PNSY. CONTRACTOR SHALL THEREFORE PROVIDE FOR DEWATERING OF TUNNELS.

GENERAL NOTES CONTINUED:

14. THE PROJECT SITE IS AN OPERATING NAVY FACILITY. THE CONTRACTOR SHALL COORDINATE WORK TO PERMIT NAVY OPERATIONS TO BE PERFORMED DURING THE COURSE OF WORK. DELAY CLAIMS DUE TO PERIODIC WORK STOPPAGES OR CHANGES IN WORK SEQUENCE BASED ON IMPACTS FROM SHIPYARD OPERATIONS WILL NOT BE ALLOWED. THE CONTRACTOR MAY NEED TO WORK WEEKENDS TO ENSURE SHIPYARD OPERATIONS ARE NOT IMPACTED.

15. FOR EXCAVATION, THE CONTRACTOR SHALL SAW–CUT AND GRIND EXISTING PAVEMENT IN NEAT STRAIGHT LINES. TACK COAT SHALL BE APPLIED TO ALL SAW–CUT SURFACES PRIOR TO REPAVING. REFER TO DETAILS PROVIDED IN ATTACHED DRAWINGS.

16. ANY PAVEMENT AND PAVEMENT MARKINGS REMOVED OR DISTURBED BY THE CONSTRUCTION SHALL BE REPLACED IN–KIND.

17. UPON COMPLETION OF PROJECT WORK, CONTRACTOR SHALL CLEAN WORK AREA FREE OF EQUIPMENT, TOOLS, MATERIALS, DEBRIS AND DUST.

18. THE CONTRACTOR SHALL ENSURE ALL WORK MEETS THE REQUIREMENTS SPECIFIED IN EM 385–1–1 (CURRENT EDITION, INCLUDING LATEST ERRATA AND CHANGES).

19. IN THE EVENT THAT ARCHAEOLOGICAL RESOURCES ARE IDENTIFIED DURING CONSTRUCTION, WORK SHALL STOP IMMEDIATELY AND CONTRACTING OFFICER SHALL BE CONTACTED FOR FURTHER DIRECTION. WORK SHALL NOT RESUME UNTIL DIRECTED BY THE CONTRACTING OFFICER TO PROCEED.

20. GOODRICH AVE SHALL BE CONSIDERED TO BE WITHIN ZONE 1, AN AREA THAT IS ASSUMED TO CONTAIN CONTAMINATED SOILS WHICH UPON GENERATION, MAY BE CHARACTERIZED AS A HAZARDOUS WASTE. THE CONTRACTOR SHALL PROVIDE A CERTIFIED SAFETY PERSONNEL (CSP) TO PREPARE AND IMPLEMENT THE ACCIDENT PREVENTION PLAN (APP)/SITE SPECIFIC HEALTH PLAN (SSHP) (SEE SPECIFICATION 01 35 29 13). A LICENSED CSP SHALL BE AT THE WORK LOCATION AT ALL TIMES EXCAVATION WORK IS BEING PERFORMED. SEE TECHNICAL SPECIFICATIONS FOR SPECIFIC REQUIREMENTS.

21. COORDINATION WITH THE PWD–ME IR PROGRAM MANAGER IS REQUIRED AT LEAST THREE WEEKS PRIOR TO THE START OF CONSTRUCTION

22. A HAZARDOUS MATERIAL SURVEY SHOULD BE PERFORMED PRIOR TO REMOVAL OF PIPE INSULATION. IF ASBESTOS CONTAINING MATERIALS ARE FOUND IN ANY OTHER STRUCTURES DURING THE WORK THE CONTRACTOR SHALL STOP WORK IMMEDIATELY, CONTACT THE CONTRACTING OFFICER, AND PROCEED ONCE APPROPRIATE CONTROLS ARE APPROVED BY THE NAVY AND IN PLACE MEETING ALL APPLICABLE REGULATIONS.

23 SITE WORK CONDUCTED IN THE STATE OF MAINE SHORELAND ZONE, INCLUDING ANY FILLING, EXCAVATION, LANDSCAPING, AND/OR OTHER EARTHWORK IN EXCESS OF ONE CUBIC YARD OF DISTURBANCE, SHALL COMPLY WITH STATE OF MAINE REQUIREMENTS FOR CERTIFICATION IN EROSION AND SEDIMENT CONTROL PRACTICES. A CERTIFIED INDIVIDUAL SHALL BE RESPONSIBLE FOR MANAGEMENT OF EROSION AND SEDIMENT CONTROL PRACTICES AT THE SITE EACH DAY EARTH MOVING ACTIVITIES OCCUR. A CERTIFIED INDIVIDUAL IS REQUIRED TO VISIT THE SITE EVERY DAY TO ENSURE PROPER EROSION AND SEDIMENT CONTROL PRACTICES ARE FOLLOWED. AS AN ALTERNATIVE, THE CONTRACTOR MAY CHOOSE TO CONTRACT WITH A CERTIFIED INDIVIDUAL TO SUPERVISE THE CONTRACTOR'S WORK IN SHORELAND AREAS. UNDER THE STATE OF MAINE'S SHORELAND ZONING STATUTES, THE PORTSMOUTH NAVAL SHIPYARD IS LOCATED ENTIRELY WITHIN THE STATE'S SHORELAND ZONE.

24. DESIGN CRITERIA – MANHOLE COVERS AND SIDEWALKS SHALL SUPPORT:

   A. H20 VEHICLE LOADING PLUS A 30% INCREASE FOR IMPACT LOADS.

   B. LIVE LOAD OF 250PSF

   C. UNLESS NOTED OTHERWISE IN CONTRACT DRAWINGS, MANHOLE COVERS SHALL BE DUCTILE IRON WITH HINGED HATCH ACCESS ASSEMBLY SO AS TO LIMIT THE LIFTING FORCE OF COVER TO 70LBS. MANHOLE COVERS SHOULD MEET THE PROOF LOAD TESTING REQUIRMENTS OF AASHTO–M 306–05

RAIL TRACKS:

1. CONTRACTOR SHALL COORDINATE WITH PWD–ME CONSTRUCTION OFFICER FOR RECERTIFICATION OF ALL AFFECTED RAIL TRACKS DUE TO WORK AFTER THEIR REINSTALLATION.

STRUCTURAL STEEL NOTES:

1. STEEL DESIGN AND CONSTRUCTION SHALL BE IN ACCORDANCE WITH "STEEL CONSTRUCTION MANUAL" AMERICAN INSTITUTE OF STEEL CONSTRUCTION (AISC) – 13th EDITION.

CONCRETE NOTES:

1. ALL CONCRETE CONSTRUCTION SHALL BE IN CONFORMANCE WITH AMERICAN CONCRETE INSTITUTE BUILDING CODE, ACI 318, LATEST EDITION.

2. ALL CONCRETE SHALL BE NORMAL WEIGHT HAVING A MINIMUM COMPRESSIVE STRENGTH AT 28 DAYS OF4000 PSI UNLESS NOTED OTHERWISE.

   A. PORTLAND CEMENT SHALL CONFORM TO ASTM C 150 TYPE II.
   B. AGGREGATE SHALL CONFORM TO ASTM C33, 3/4" MAXIMUM SIZE.
   C. WATER SHALL CONFORM TO ASTM C 94 AND SHALL BE POTABLE.
   D. MAXIMUM WATER CEMENT RATIO SHALL BE 0.45.
   E. MAXIMUM SLUMP SHALL BE 4".
   F. AIR ENTRAINING AGENT SHALL CONFORM TO ASTM C 260 WITH 4–6% TOTAL AIR.

3. REINFORCING STEEL SHALL BE ASTM A615 GRADE 60. ALL DETAILS SHALL BE IN ACCORDANCE WITH ACI DETAIL STANDARD ACI 315.

4. WELDED WIRE FABRIC SHALL CONFORM TO ASTM A185 SPECIFICAITONS AND PLACED IN ACCORDANCE WITH THE WELDED STEEL WIRE INSTITUTE.

5. REINFORCING STEEL SHALL HAVE A CONCRETE COVER AS FOLLOWS, EXCEPT AS OTHERWISE SHOWN ON DRAWINGS:

   A. CONCRETE CAST AGAINST EARTH: 3"
   B. CONCRETE EXPOSED TO EARTH OR WEATHER: 2"
   C. CONCRETE NOT EXPOSED TO WEATHER OR IN CONTACT WITH GROUND: 1"

6. ALL EXPOSED CONCRETE EDGES SHALL HAVE 3/4" CHAMFER.

7. ALL LAP SPLICES FOR CONTINUOUS REINFORCING, NOT SHOWN ON DRAWINGS, SHALL BE IN ACCORDANCE WITH ACI 318.

8. FOR PENETRATIONS GREATER THAN 10" THROUGH CONCRETE WALLS AND SLABS, PROVIDE ADDITIONAL DIAGONAL REINFORCING BARS AROUND THE OPENING AT EACH FACE EQUAL IN SIZE TO THE MAIN REINFORCING. DIAGONAL BARS SHALL OVERLAP A MINIMUM OF 1'–6".

9. HOT WEATHER CONCRETE INSTALLATION SHALL BE PERFORMED IN ACCORDANCE WITH ACI 305. COLD WEATHER CONCRETE INSTALLATION SHALL BE PERFORMED IN ACCORDANCE WITH ACI 306.

10. CURING:

   A. HORIZONTAL SURFACES SHALL BE KEPT CONTINUOUSLY MOIST FOR A MINIMUM OF SEVEN DAYS.

   B. VERTICAL SURFACES SHALL RECEIVE TWO COATS (ONE AT TIME OF STRIPPING AND ANOTHER THREE DAYS LATER) OF AN APPROVED NON–TOXIC CURING COMPOUND. FORMS SHALL REMAIN IN–PLACE THROUGH INITIAL CURE.

DEMOLITION:

1. THE CONTRACTOR SHALL PROVIDE CONTROL MEASURES AS REQUIRED BY ENVIRONMENTAL REGULATIONS AND AS REQUIRED TO PREVENT DEBRIS CONTAMINANTS (SOLID, LIQUID OR DISSOLVED) FROM ENTERING THE RIVER.

2. ALL MATERIAL DEMOLISHED AND NOT REUSED OR SALVAGED TO THE GOVERNMENT SHALL BECOME THE PROPRERTY OF THE CONTRACTOR AND SHALL BE REMOVED DAILY FROM THE GOVERMENTS PROPERTY. REMOVED MATERIAL SHALL BE DISPOSED OF IN ACCRDANCE WITH ALL LOCAL, STATE AND FEDERAL LAWS.

3. THE CONTRACTOR IS RESPONSIBLE FOR REMOVAL OF ALL DEBRIS RESULTING FROM DEMOLITION.

BID OPTIONS:

THE PROJECT HAS THREE BID OPTIONS:

1. BASE BID – GOODRICH AVE FROM MANHOLE 149A TO MH 170.

2. BID OPTION 1 – CONNECTION FROM GOODRICH AVE TO BUILDING 154.

3. BID OPTION 2 – SICARD ST FROM MANHOLE 147 TO BUILDING 29.

ABBREVIATIONS:

@	AT
BLDG.	BUILDING
BM.	BEAM
BOT.	BOTTOM
CJ	CONSTRUCTION JOINT
CONC.	CONCRETE
CONT.	CONTINUOUS
DIA.	DIAMETER
DIMS.	DIMENSIONS
DWG.	DRAWING
DWGS.	DRAWINGS
EA.	EACH
E.F.	EACH FACE
E.J.	EXPANSION JOINT
EL.	ELEVATION
EMBED.	EMBEDMENT
EQ.	EQUAL
E.W.	EACH WAY
EXT.	EXTERIOR
FFL	FINISHED FLOOR ELEVATION
FIN.	FINISHED
FTG.	FOOTING
GALV.	GALVANIZED
HOR.	HORIZONTAL
HSS	HOLLOW STRUCTURAL SECTION
INT.	INTERIOR
JT.	JOINT
LOC.	LOCATION
MANUF.	MANUFACTURER
MAX.	MAXIMUM
MIN.	MINIMUM
N/A	NOT APPLICABLE
NO., #	NUMBER
O.C.	ON CENTER
OPNG.	OPENING
PL.	PLATE
REINF.	REINFORCEMENT
REQD	REQUIRED
SCHED.	SCHEDULE
SECT.	SECTION
SQ.	SQUARE
T&B	TOP AND BOTTOM
THK.	THICK
T.O.	TOP OF
TYP.	TYPICAL
U.N.O.	UNLESS NOTED OTHERWISE
VERT.	VERTICAL
W/	WITH

GRAPHIC SCALE

0 10' 20' 40'

SCALE:1"=20'

STM	DESCRIPTION	DATE	APPR

NAVFAC

COMMONWEALTH OF MASSACHUSETTS ROBERT G. NJOROGE CIVIL No. 49642 REGISTERED PROFESSIONAL ENGINEER

SEAL

ENGINEERS FST Since 1914

FAY, SPOFFORD & THORNDIKE
5 BURLINGTON WOODS
BURLINGTON, MA 01803

A/E INFO

APPROVED

FOR COMMANDER NAVFAC

ACTIVITY

SATISFACTORY TO DATE

DES	RGN	DRW	RGN	CHK	VMG

PWD–ME DM/POC L. MAHAR

BRANCH MANAGER

CHIEF ENG/ARCH

FIRE PROTECTION

DEPARTMENT OF THE NAVY
NAVAL FACILITIES ENGINEERING COMMAND
PUBLIC WORKS DEPARTMENT – MAINE

NAVAL FACILITIES ENGINEERING COMMAND ~ MID-ATLANTIC
NAVAL SHIPYARD – PORTSMOUTH, NH

PORTSMOUTH NAVAL SHIPYARD
KITTERY, MAINE

REPLACE STEAM & CONDENSATE
GOODRICH AVENUE & SICARD STREET

ABBREVIATIONS AND GENERAL NOTES

MAXIMO No.: 7725970
EPROJECT NO.: 1331743
CONSTR. CONTR. NO.

NAVFAC DRAWING NO.
12679256

SHEET 6 OF 29

C-001 MS-14-1218

DRAWFORM REVISION: 10 MARCH 2009

FILE NAME: U:\bq-207oa – steam\CADD\Roadways\03_Structural\BQ-2078A-C-001.dwg LAYOUT NAME: C-001 PLOTTED: Wednesday, August 06, 2014 – 12:07pm USER: Wrensik_V

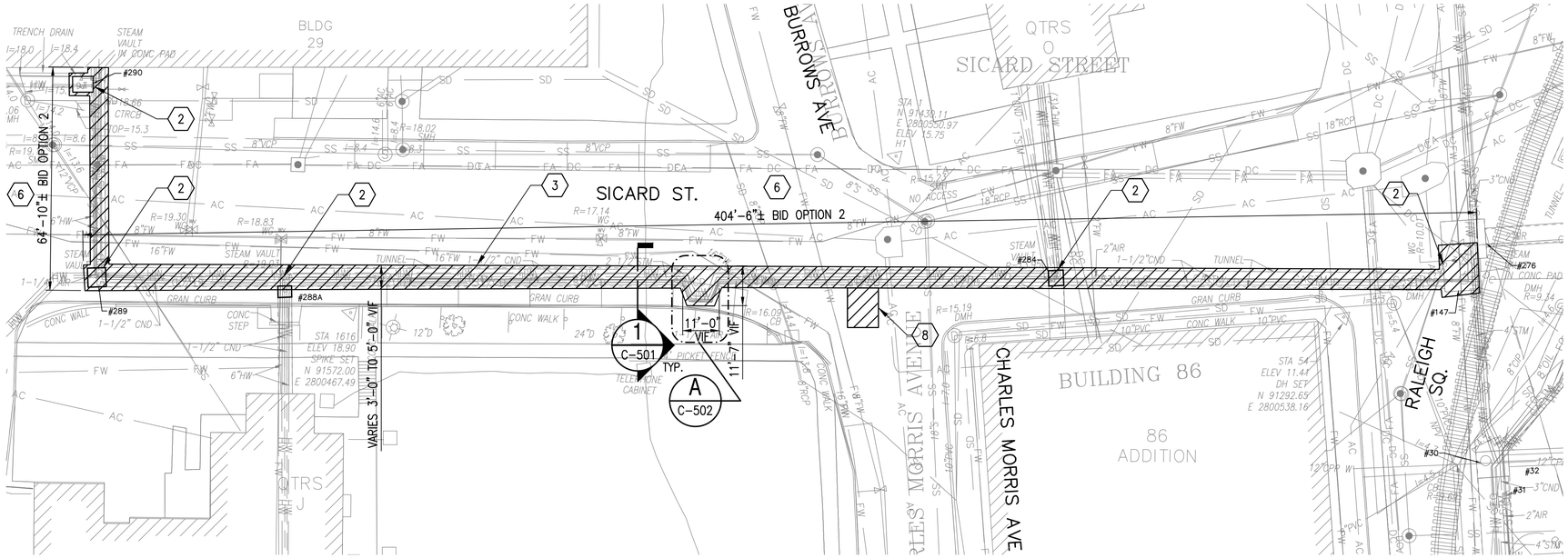

SICARD STREET

SCALE: 1"=20'

PLAN NORTH

DEMOLITION KEY PLAN

(2) EXISTING MANHOLE. TO BE REMOVED AND DISPOSED UNLESS OTHERWISE NOTED IN MANHOLES DEMOLITION SCHEDULE.

(3) ROAD WAY – REMOVE AND DISPOSE EXISTING 3'–0" TO 5'–0" WIDE X 6" TO 10" THICK REINFORCED CONCRETE SLAB X 3'–0" TO 5'–0" DEEP TUNNEL, ASPHALT TOPPING & ANY SUBGRADE, TYPICAL.

(6) BID OPTION 2. SICARD ST TO BUILDING 29

(8) REMOVE AND DISPOSE EXISTING WALL, PAVING AND FILL FOR EXPANSION LOOP.

MANHOLE DEMOLITION SCHEDULE

MANHOLE NUMBER	DIMENSIONS			MANHOLE WALLS MATERIAL	SERVICE	NOTES
	INSIDE		COVER			
	WIDExLONG	DEEP				
MH 147	66"X60"	46"±	48"X48"	CONCRETE	STEAM, CONDENSATE	1 3 4
MH 284	100"X90"	40"±	90"X80"	CONCRETE	STEAM, CONDENSATE	3 4
MH 288A	48"X60"	40"±	36"X52"	CONCRETE	STEAM, CONDENSATE	1 4
MH 289	50"X60"	40"±	50"X50"	CONCRETE	STEAM, CONDENSATE	1 4
MH 290	48"X58"	44"±	44"X56"	CONCRETE	STEAM, CONDENSATE	4 7

NOTES:

1. MANHOLE TO BE RECONSTRUCTED AT THIS LOCATION, SEE DETAIL C–501.
2. MANHOLE COVER IN GOOD CONDITION AND CAN BE REUSED.
3. WATER INSIDE MANHOLE AT THE TIME OF FIELD INVESTIGATIONS.
4. ABANDONED WATER LINES PRESENT IN MANHOLE TO BE REMOVED & DISPOSED.
5. MANHOLE ADJACENT TO THIS MANHOLE THAT IS NOT PART OF STEAM TUNNEL, TO REMAIN.
6. MANHOLE COVER HAS NO NUMBER LABEL.
7. MANHOLE TO REMAIN.

NOTES

A. PIPE INSULATION & SILT AT BOTTOM OF TUNNEL CONTAIN ASBESTOS. HAZARDOUS MATERIALS ABATEMENT PROCEDURES SHALL BE FOLLOWED. SEE SPECIFICATIONS.

B. REFER TO MANHOLE DEMOLITION SCHEDULE, DRAWING CD101 & CD103, FOR MANHOLE SIZES.

C. DIMENSIONS SHOWN ARE APPROXIMATE. FIELD VERIFY PRIOR TO MATERIAL PROCUREMENT & FABRICATION.

KEY PLAN

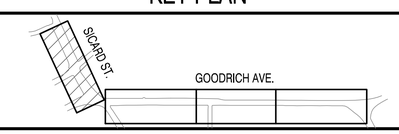

GRAPHIC SCALE

0 10' 20' 40'

SCALE:1"=20'

SYM	DESCRIPTION	DATE	APPR

NAVFAC

COMMONWEALTH OF MASSACHUSETTS ROBERT G. NJOROGE CIVIL No. 49642 REGISTERED PROFESSIONAL ENGINEER

SEAL

ENGINEERS FST Since 1914

FAY, SPOFFORD & THORNDIKE
5 BURLINGTON WOODS
BURLINGTON, MA 01803

A/E INFO

APPROVED

FOR COMMANDER NAVFAC

ACTIVITY

SATISFACTORY TO DATE

DES RGN | DRW RGN | CHK VMG

PWD–ME DM/POC L. MAHAR

BRANCH MANAGER

CHIEF ENG/ARCH

FIRE PROTECTION

DEPARTMENT OF THE NAVY
NAVAL FACILITIES ENGINEERING COMMAND
PUBLIC WORKS DEPARTMENT – MAINE

NAVAL FACILITIES ENGINEERING COMMAND ~ MID-ATLANTIC
NAVAL SHIPYARD – PORTSMOUTH, NH

PORTSMOUTH NAVAL SHIPYARD
KITTERY, MAINE

REPLACE STEAM & CONDENSATE
GOODRICH AVENUE & SICARD STREET

SICARD STREET – DEMOLITION PLAN

MAXIMO No.: 7725970

EPROJECT NO.: 1331743

CONSTR. CONTR. NO.

NAVFAC DRAWING NO.
12679257

SHEET 7 OF 29

CD101 | MS-14-1219

DRAWFORM REVISION: 10 MARCH 2009

FILE NAME: U:\Dq-207qa – steam\CADD\Roadways\03_Structural\B9-207AA-CD101-03.dwg LAYOUT NAME: CD101 PLOTTED: Tuesday, August 05, 2014 – 2:36pm USER: Wronsk_V

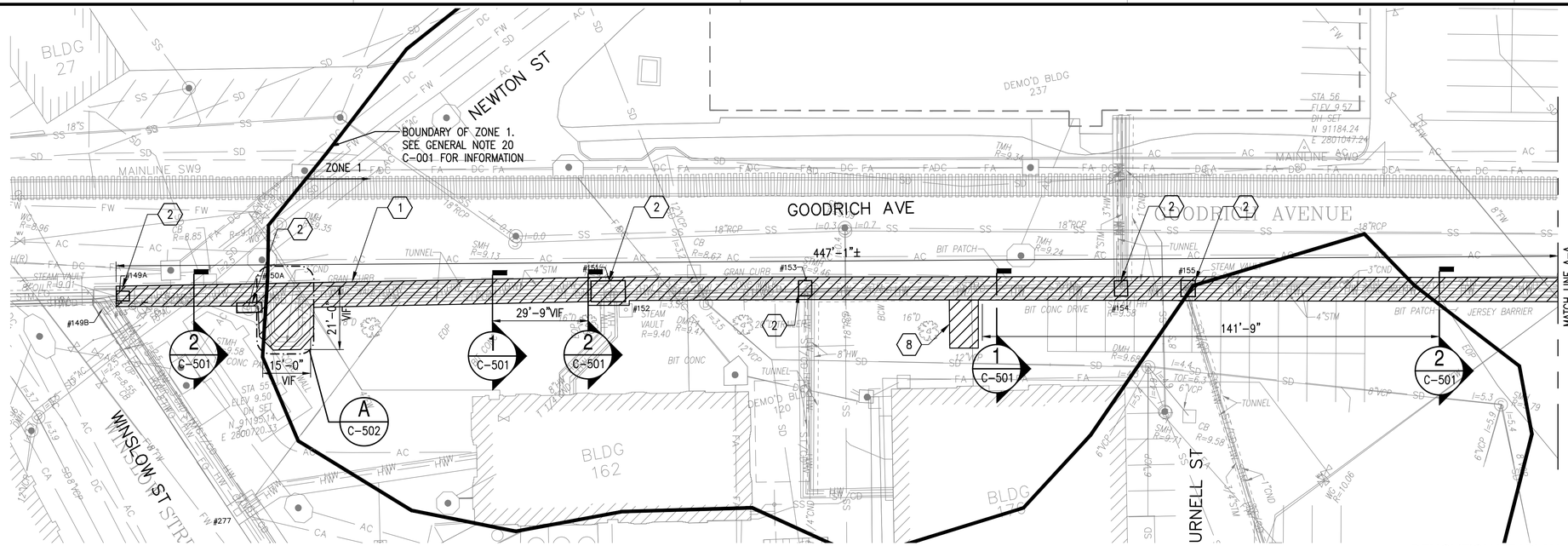

GOODRICH AVENUE

SCALE: 1"=20'

PLAN NORTH

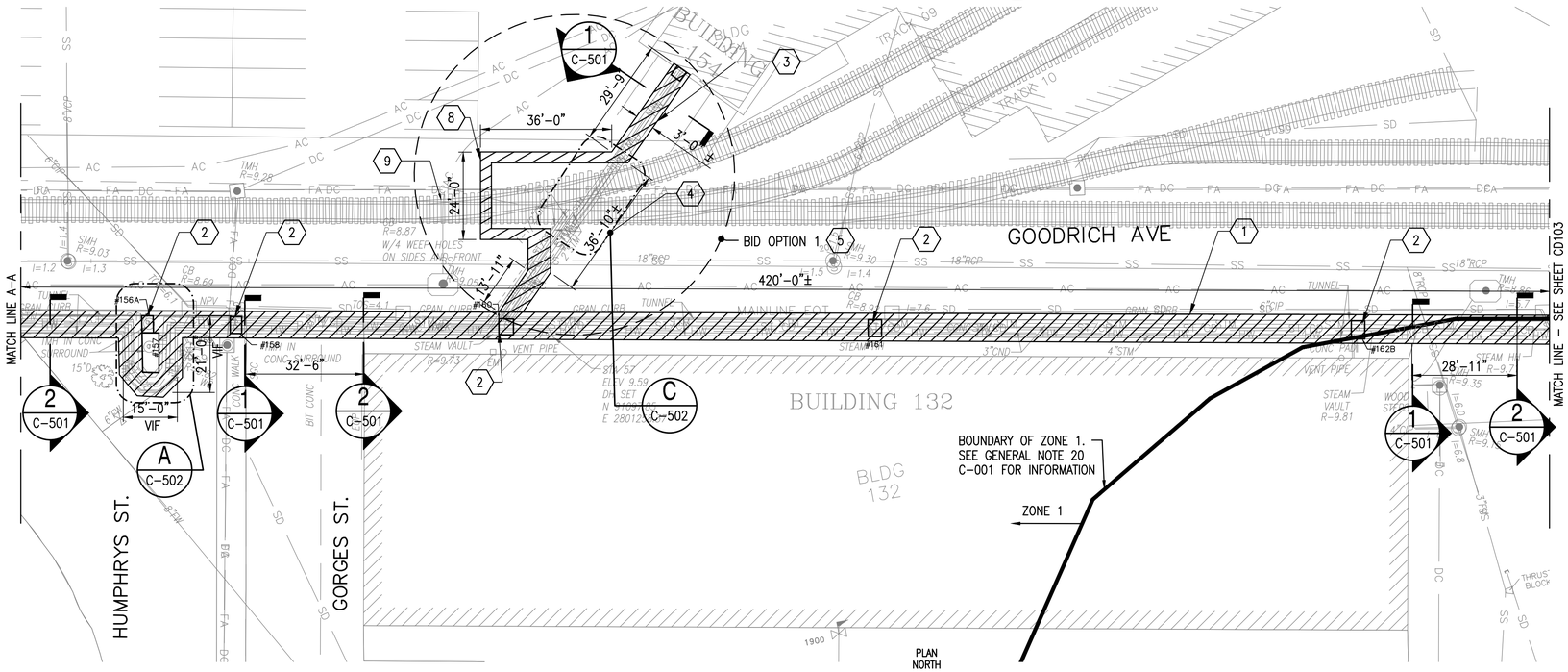

GOODRICH AVENUE

SCALE: 1"=20'

PLAN NORTH

DEMOLITION KEY PLAN

1. SIDE WALK – REMOVE AND DISPOSE EXISTING 5'–0"± WIDE X 6" ± THICK REINFORCED CONCRETE SLAB X 3'–0" TO 5'–0" DEEP TUNNEL & ANY SUB BASE MATERIAL, TYPICAL.
2. EXISTING MANHOLE. TO BE REMOVED AND DISPOSED UNLESS OTHERWISE NOTED IN MANHOLES DEMOLITION SCHEDULE (DRAWING CD103).
3. ROAD WAY – REMOVE AND DISPOSE EXISTING 3'–0" TO 5'–0" WIDE X 6" TO 10" THICK REINFORCED CONCRETE SLAB X 3'–0" TO 5'–0" DEEP TUNNEL, ASPHALT TOPPING & ANY SUB BASE, TYPICAL.
4. EXIST. TUNNEL WITHIN EXTENTS OF RAIL TRACKS TO REMAIN.
5. BID OPTION 1. CONNECTION FROM GOODRICH AVE TO BUILDING 154
8. REMOVE AND DISPOSE EXISTING WALL, PAVING AND FILL FOR EXPANSION LOOP.
9. EXISTING CONCRETE/PAVING TO BE REMOVED BELOW RAIL TRACKS.

NOTES

A. PIPE INSULATION & SILT AT BOTTOM OF TUNNEL CONTAIN ASBESTOS. HAZARDOUS MATERIALS ABATEMENT PROCEDURES SHALL BE FOLLOWED. SEE SPECIFICATIONS.

B. REFER TO MANHOLE DEMOLITION SCHEDULE, DRAWING CD101 & CD103, FOR MANHOLE SIZES.

C. DIMENSIONS SHOWN ARE APPROXIMATE. FIELD VERIFY PRIOR TO MATERIAL PROCUREMENT & FABRICATION.

KEY PLAN

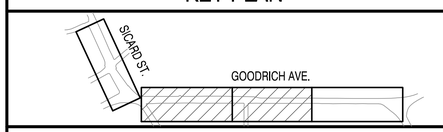

GRAPHIC SCALE

0 10' 20' 40'

SCALE:1"=20'

SYM	DESCRIPTION	DATE	APPR

NAVFAC

COMMONWEALTH OF MASSACHUSETTS ROBERT G. NJOROGE CIVIL No. 49642 REGISTERED PROFESSIONAL ENGINEER

SEAL

ENGINEERS FST Since 1914

FAY, SPOFFORD & THORNDIKE
5 BURLINGTON WOODS
BURLINGTON, MA 01803

A/E INFO

APPROVED

FOR COMMANDER NAVFAC

ACTIVITY

SATISFACTORY TO DATE

DES RGN | DRW RGN | CHK VMG

PWD-ME DM/POC L. MAHAR

BRANCH MANAGER

CHIEF ENG/ARCH

FIRE PROTECTION

NAVAL FACILITIES ENGINEERING COMMAND
NAVAL FACILITIES ENGINEERING COMMAND ~ MID-ATLANTIC
NAVAL SHIPYARD ~ PORTSMOUTH, NH

DEPARTMENT OF THE NAVY
PUBLIC WORKS DEPARTMENT ~ MAINE

PORTSMOUTH NAVAL SHIPYARD
KITTERY, MAINE

REPLACE STEAM & CONDENSATE
GOODRICH AVENUE & SICARD STREET

GOODRICH AVENUE – DEMOLITION PLAN – SHEET 1 OF 2

MAXIMO No.: 7725970

EPROJECT NO.: 1331743

CONSTR. CONTR. NO.

NAVFAC DRAWING NO. 12679258

SHEET 8 OF 29

CD102 | MS-14-1220

DRAWFORM REVISION: 10 MARCH 2009

FILE NAME: U:\bq-207aa - steam\CADD\Roadways\03_Structural\BQ-207AA-CD101-03.dwg LAYOUT NAME: CD102 PLOTTED: Wednesday, August 06, 2014 - 12:06pm USER: Wronsk_V

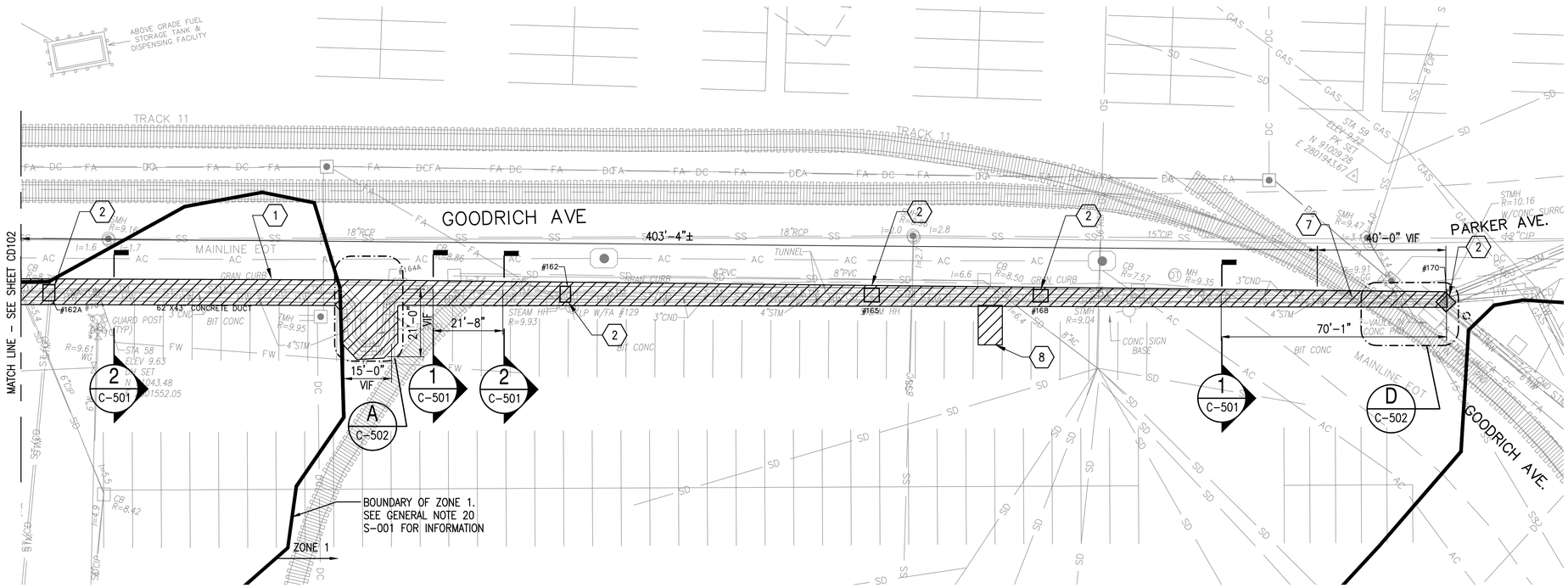

GOODRICH AVENUE

SCALE: 1"=20'

PLAN NORTH

MANHOLE DEMOLITION SCHEDULE

MANHOLE NUMBER	DIMENSIONS INSIDE WIDExLONG	DIMENSIONS INSIDE DEEP	DIMENSIONS COVER	MANHOLE WALLS MATERIAL	SERVICE	NOTES
MH 149A	48"XCONT.	56"±	48"X56"	CONCRETE	STEAM, CONDENSATE	①④
MH 151	48"XCONT.	50"±	32"ø	CONCRETE	STEAM, CONDENSATE	④⑤
MH 153	48"XCONT.	50"±	32"ø	CONCRETE	STEAM, CONDENSATE	④
MH 154	48"XCONT.	46"±	36"X24"	CONCRETE	STEAM, CONDENSATE	④
MH 155	48"XCONT.	46"±	42"X48"	CONCRETE	STEAM, CONDENSATE	①②④
MH 156A	48"XCONT.	42"±	36"X36"	CONCRETE	STEAM, CONDENSATE	④⑤
MH 158	48"XCONT.	42"±	24"X36"	CONCRETE	STEAM, CONDENSATE	④
MH 160	48"XCONT.	52"±	30"X30"	CONCRETE	STEAM, CONDENSATE	①④
MH 161	48"XCONT.	37"±	33"X24"	CONCRETE	STEAM, CONDENSATE	①④
MH 162B	48"XCONT.	56"	48"x48"	CONCRETE	STEAM, CONDENSATE	②④⑥
MH 162A	48"XCONT.	56"	48"x48"	CONCRETE	STEAM, CONDENSATE	④⑥⑦
MH 162	48"XCONT.	30"±	26"x38"	CONCRETE	STEAM, CONDENSATE	④
MH 165	48"XCONT.	28"±	22"x33"	CONCRETE	STEAM, CONDENSATE	①④
MH 168	48"XCONT.	51"±	26"X40"	CONCRETE	STEAM, CONDENSATE	④
MH 170	48"X48"	40"±	32"ø	CONCRETE	STEAM, CONDENSATE	③④⑦

NOTES:

① MANHOLE ROOF, COVER & WALLS TO BE RECONSTRUCTED AT THIS LOCATION, SEE TYPICAL DETAIL C-501.
② MANHOLE COVER IN GOOD CONDITION. MAY BE REUSED AT CONTRACTORS OPTION.
③ WATER INSIDE MANHOLE AT THE TIME OF FIELD INVESTIGATIONS.
④ REMOVE & DISPOSE ABANDONED WATER LINES PRESENT MANHOLE.
⑤ MANHOLE ADJACENT TO THIS MANHOLE THAT IS NOT PART OF STEAM TUNNEL. TO REMAIN.
⑥ MANHOLE COVER HAS NO NUMBER LABEL.
⑦ MANHOLE TO REMAIN.
⑧ MANHOLES 150A, 152 & 157 ARE ADJECENT TO STEAM TUNNEL & SHALL REMAIN.

DEMOLITION KEY PLAN

1. SIDE WALK – REMOVE AND DISPOSE EXISTING 5'-0"± WIDE X 6" ± THICK REINFORCED CONCRETE SLAB X 3'-0" TO 5'-0" DEEP TUNNEL & ANY SUB BASE MATERIAL, TYPICAL.
2. EXISTING MANHOLE. TO BE REMOVED AND DISPOSED UNLESS OTHERWISE NOTED IN MANHOLES DEMOLITION SCHEDULE.
7. EXSITING CONCRETE & FILL TO BE REMOVED BELOW RAIL TRACKS.
8. REMOVE AND DISPOSE EXISTING WALL, PAVING AND FILL FOR EXPANSION LOOP.

NOTES

A. PIPE INSULATION & SILT AT BOTTOM OF TUNNEL CONTAIN ASBESTOS. HAZARDOUS MATERIALS ABATEMENT PROCEDURES SHALL BE FOLLOWED. SEE SPECIFICATIONS.

B. REFER TO MANHOLE DEMOLITION SCHEDULE, DRAWING CD101 & CD103, FOR MANHOLE SIZES.

C. DIMENSIONS SHOWN ARE APPROXIMATE. FIELD VERIFY PRIOR TO MATERIAL PROCUREMENT & FABRICATION.

KEY PLAN

GRAPHIC SCALE

0 10' 20' 40'

SCALE:1"=20'

SYM	DESCRIPTION	DATE	APPR

NAVFAC

COMMONWEALTH OF MASSACHUSETTS ROBERT G. NJOROGE CIVIL No. 49642 REGISTERED PROFESSIONAL ENGINEER

SEAL

ENGINEERS FST Since 1914
FAY, SPOFFORD & THORNDIKE
5 BURLINGTON WOODS BURLINGTON, MA 01803
A/E INFO

APPROVED
FOR COMMANDER NAVFAC
ACTIVITY
SATISFACTORY TO DATE

DES	RGN	DRW	RGN	CHK	VMG
PWD-ME DM/POC	L. MAHAR				
BRANCH MANAGER					
CHIEF ENG/ARCH					
FIRE PROTECTION					

DEPARTMENT OF THE NAVY
NAVAL FACILITIES ENGINEERING COMMAND
PUBLIC WORKS DEPARTMENT – MAINE
NAVAL FACILITIES ENGINEERING COMMAND ~ MID-ATLANTIC
NAVAL SHIPYARD – PORTSMOUTH, NH
PORTSMOUTH NAVAL SHIPYARD KITTERY, MAINE
REPLACE STEAM & CONDENSATE
GOODRICH AVENUE & SICARD STREET
GOODRICH AVENUE – DEMOLITION PLAN – SHEET 2 OF 2

MAXIMO No.: 7725970
EPROJECT NO.: 1331743
CONSTR. CONTR. NO.
NAVFAC DRAWING NO. 12679259
SHEET 9 OF 29
CD103 MS-14-1221

DRAWFORM REVISION: 10 MARCH 2009

FILE NAME: U:\ps-207oa – steam\CADD\Roadways\03_Structural\BG-207AA-CD101-03.dwg LAYOUT NAME: CD103 PLOTTED: Tuesday, August 05, 2014 – 2:32pm USER: Wronsk_V

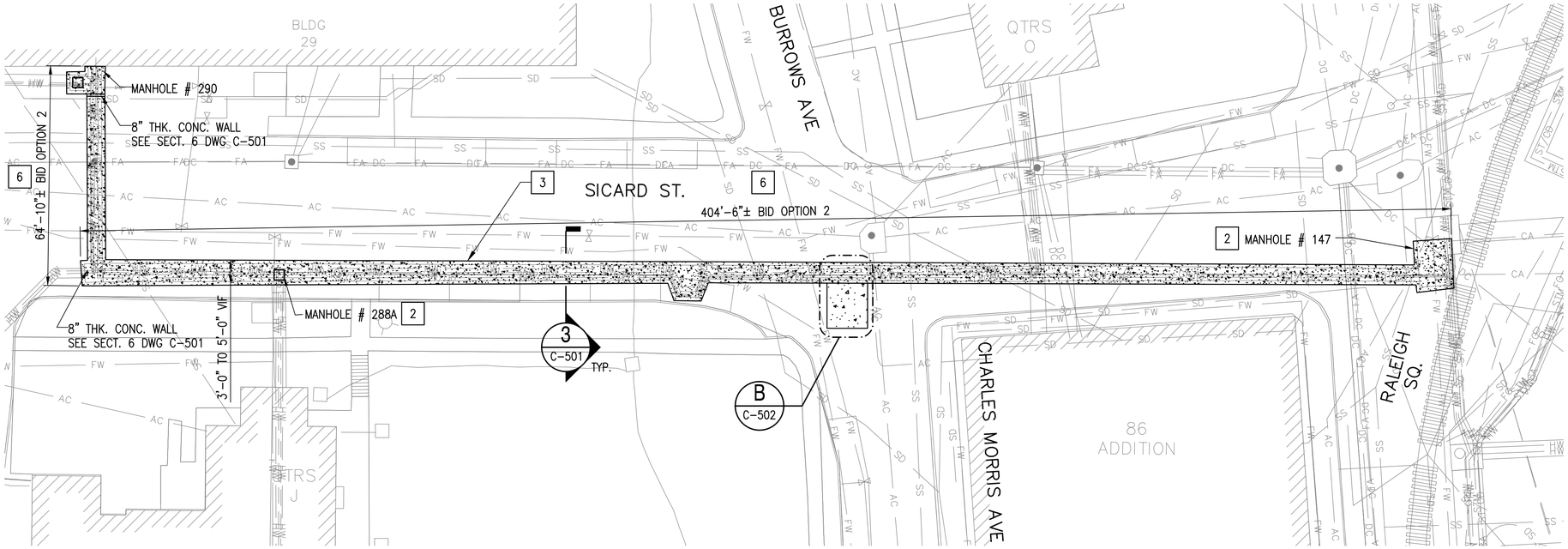

SICARD STREET

SCALE: 1"=20'

PLAN NORTH

KEY NOTES:

2 PROVIDE MANHOLE, TYPICAL. SEE DETAILS TYPICAL MANHOLE PLAN & SECTIONS 5 & 6, DRAWING S-501

3 ROAD WAY – INFILL TUNNEL WITH AGGREGATE SUBBASE, SLAB BASE, ASPHALT CONC. BINDER & WEARING COURSE TO MATCH EXISTING ROAD WAY, TYP. SEE SECTION 3, ON S-501

6 BID OPTION 1. SICARD ST TO BUILDING 29

KEY PLAN

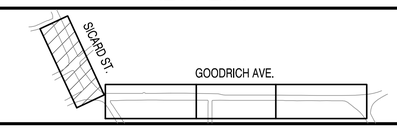

GRAPHIC SCALE

0 10' 20' 40'

SCALE:1"=20'

SYM	DESCRIPTION	DATE	APPR

NAVFAC

COMMONWEALTH OF MASSACHUSETTS
ROBERT G. NJOROGE
CIVIL
No. 49642
REGISTERED PROFESSIONAL ENGINEER
SEAL

ENGINEERS
FST
Since 1914
FAY, SPOFFORD & THORNDIKE
5 BURLINGTON WOODS
BURLINGTON, MA 01803
A/E INFO

APPROVED
FOR COMMANDER NAVFAC
ACTIVITY
SATISFACTORY TO DATE

DES RGN | DRW RGN | CHK VMG
PWD-ME DM/POC L. MAHAR
BRANCH MANAGER
CHIEF ENG/ARCH
FIRE PROTECTION

DEPARTMENT OF THE NAVY
NAVAL FACILITIES ENGINEERING COMMAND
PUBLIC WORKS DEPARTMENT – MAINE
NAVAL FACILITIES ENGINEERING COMMAND ~ MID-ATLANTIC
NAVAL SHIPYARD – PORTSMOUTH, NH
PORTSMOUTH NAVAL SHIPYARD
KITTERY, MAINE
REPLACE STEAM & CONDENSATE
GOODRICH AVENUE & SICARD STREET
SICARD STREET

MAXIMO No.: 7725970
EPROJECT NO.: 1331743
CONSTR. CONTR. NO.
NAVFAC DRAWING NO.
12679260
SHEET 10 OF 29
C-101 | MS-14-1222

DRAWFORM REVISION: 10 MARCH 2009

FILE NAME: U:\pa-207aa – steam\CADD\Roadways\03_Structural\B9-207AA-C-101-03.dwg LAYOUT NAME: C-101 PLOTTED: Tuesday, August 05, 2014 – 2:43pm USER: Wronsk_V

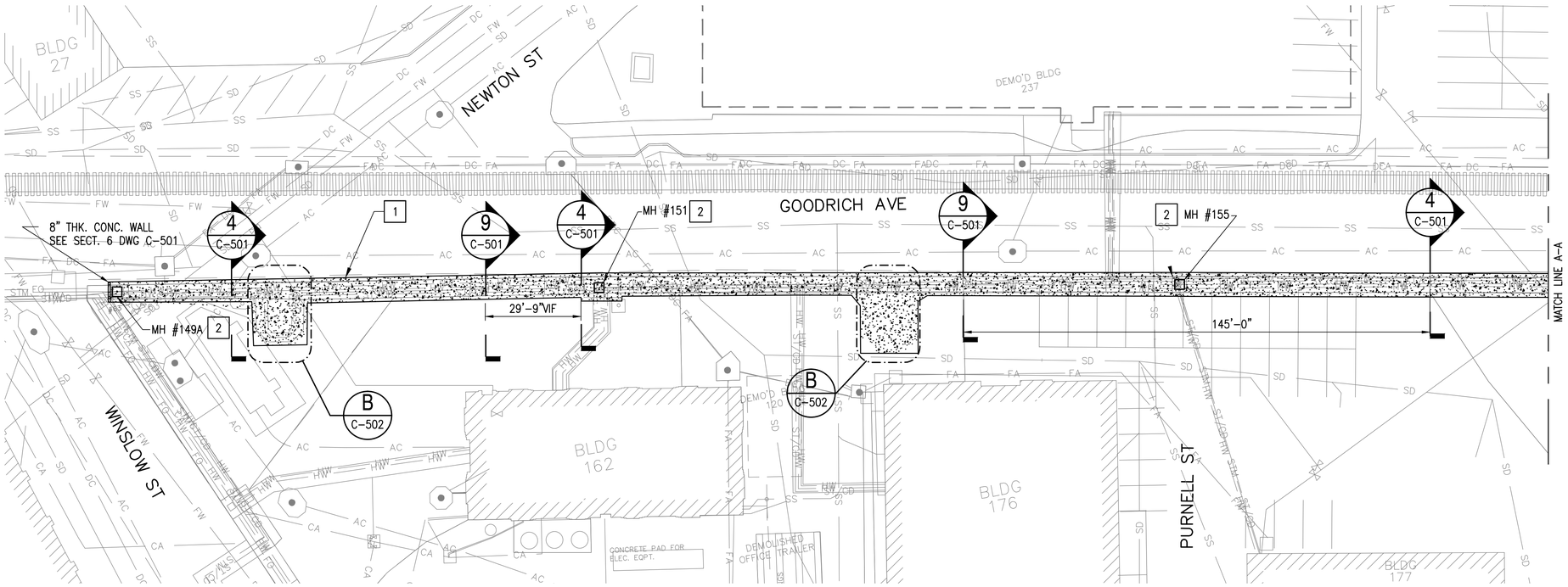

GOODRICH AVENUE

SCALE: 1"=20'

PLAN NORTH

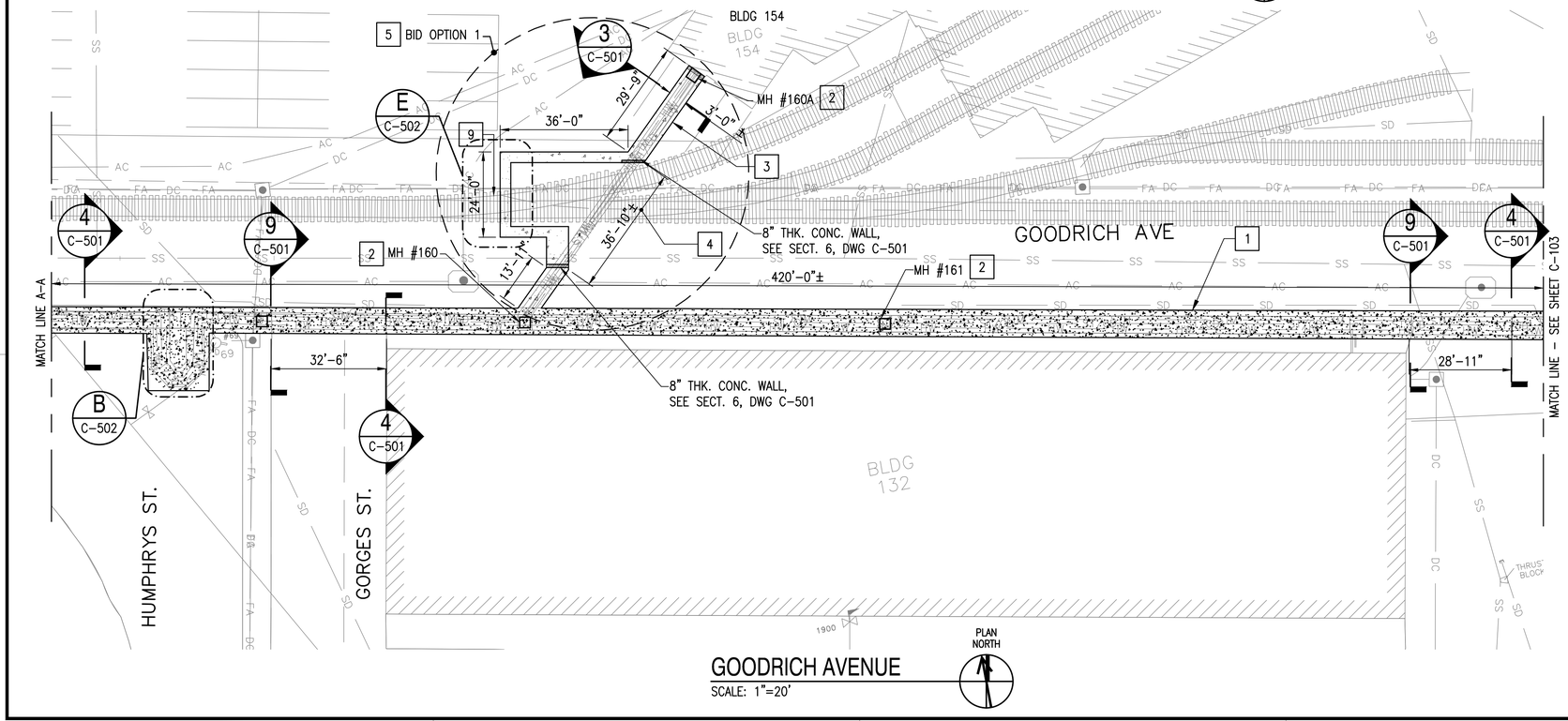

GOODRICH AVENUE

SCALE: 1"=20'

PLAN NORTH

KEY NOTES:

1. SIDE WALK – INFILL TUNNEL WITH AGGREGATE SUBBASE, BASE AND 6" THICK CONC. SIDEWALK SLAB W/ BROOM FINISH FOR NON SLIP SURFACE TYP.
2. PROVIDE MANHOLE, TYPICAL. SEE DETAILS TYPICAL MANHOLE PLAN & SECTIONS 5 & 6, DRAWING S-501
3. ROAD WAY – INFILL TUNNEL WITH AGGREGATE SUBBASE, SLAB BASE, ASPHALT CONC. BINDER & WEARING COURSE TO MATCH EXISTING ROAD WAY, TYP.
4. EXIST. TUNNEL WITHIN EXTENTS OF RAIL TRACKS TO REMAIN.
5. BID OPTION 1. CONNECTION FROM GOODRICH AVE TO BUILDING 154
9. EXISTING CONCRETE, PAVING & FILL BELOW RAIL TRACKS TO BE REMOVED FOR INSTALLATION OF PIPES. REATTACH RAIL TRACKS TO MATCH EXISTING.

KEY PLAN

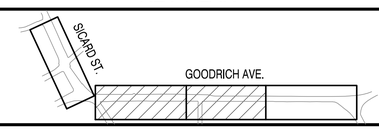

GRAPHIC SCALE

0 10' 20' 40'

SCALE:1"=20'

STM	DESCRIPTION	DATE	APPR

NAVFAC

COMMONWEALTH OF MASSACHUSETTS
ROBERT G. NJOROGE
CIVIL
No. 49642
REGISTERED PROFESSIONAL ENGINEER

SEAL

ENGINEERS
FST
Since 1914
FAY, SPOFFORD & THORNDIKE
5 BURLINGTON WOODS
BURLINGTON, MA 01803

A/E INFO.

APPROVED

FOR COMMANDER NAVFAC

ACTIVITY

SATISFACTORY TO DATE

DES RGN | DRW RGN | CHK VMG

PWD-ME DM/POC L. MAHAR

BRANCH MANAGER

CHIEF ENG/ARCH

FIRE PROTECTION

DEPARTMENT OF THE NAVY
NAVAL FACILITIES ENGINEERING COMMAND
PUBLIC WORKS DEPARTMENT – MAINE

NAVAL FACILITIES ENGINEERING COMMAND ~ MID-ATLANTIC
NAVAL SHIPYARD – PORTSMOUTH, NH

PORTSMOUTH NAVAL SHIPYARD
KITTERY, MAINE

REPLACE STEAM & CONDENSATE
GOODRICH AVENUE & SICARD STREET

GOODRICH AVENUE – SHEET 1 OF 2

MAXIMO No.: 7725970

EPROJECT NO.: 1331743

CONSTR. CONTR. NO.

NAVFAC DRAWING NO.
12679261

SHEET 11 OF 29

C-102 | MS-14-1223

DRAWFORM REVISION: 10 MARCH 2009

FILE NAME: U:\pt-207aa – steam\CADD\Roadways\03_Structural\B0-207AA-C-101-03.dwg LAYOUT NAME: C-102 PLOTTED: Tuesday, August 05, 2014 – 2:42pm USER: Wronsk_V

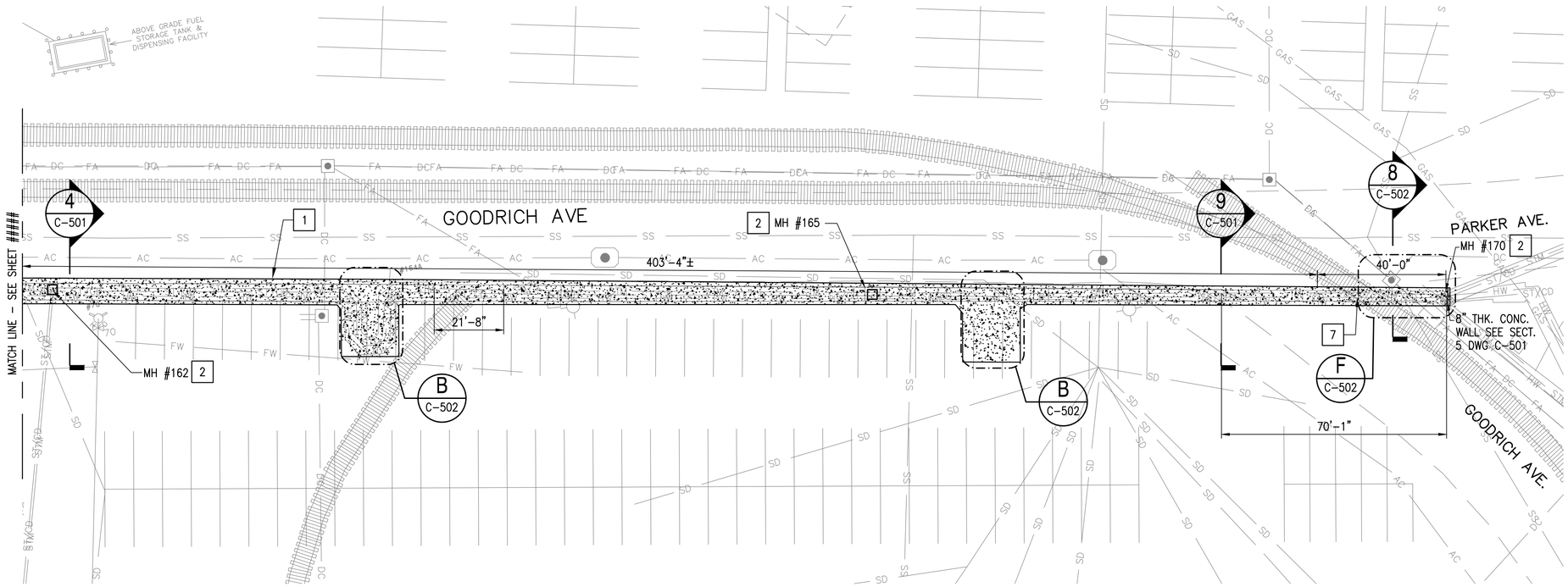

GOODRICH AVENUE

SCALE: 1"=20'

PLAN NORTH

KEY NOTES:

1. SIDE WALK – INFILL TUNNEL WITH AGGREGATE SUBBASE, BASE AND 6" THICK CONC. SIDEWALK SLAB W/ BROOM FINISH FOR NON SLIP SURFACE TYP.
2. PROVIDE MANHOLE, TYPICAL. SEE DETAILS TYPICAL MANHOLE PLAN & SECTIONS 5 & 6, DRAWING S-501
7. EXIST. CONCRETE/PAVING BELOW RAIL TRACKS TO BE REMOVED & DISPOSED FOR INSTALLATION OF PIPES. DISPOSE ONE SET OF RAIL TRACKS. ONLY ONE SET OF TRACKS IS TO BE REINSTALLED.

KEY PLAN

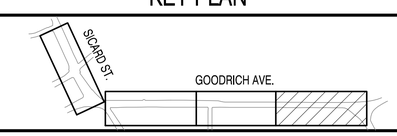

GRAPHIC SCALE

0 10' 20' 40'

SCALE:1"=20'

SYM	DESCRIPTION	DATE	APPR

NAVFAC

COMMONWEALTH OF MASSACHUSETTS ROBERT G. NJOROGE CIVIL No. 49642 REGISTERED PROFESSIONAL ENGINEER

SEAL

ENGINEERS FST Since 1914

FAY, SPOFFORD & THORNDIKE
5 BURLINGTON WOODS
BURLINGTON, MA 01803

A/E INFO

APPROVED

FOR COMMANDER NAVFAC

ACTIVITY

SATISFACTORY TO DATE

DES RGN DRW RGN CHK VMG

PWD-ME DM/POC L. MAHAR

BRANCH MANAGER

CHIEF ENG/ARCH

FIRE PROTECTION

DEPARTMENT OF THE NAVY
NAVAL FACILITIES ENGINEERING COMMAND
PUBLIC WORKS DEPARTMENT – MAINE
NAVAL FACILITIES ENGINEERING COMMAND – MID-ATLANTIC
NAVAL SHIPYARD – PORTSMOUTH, NH
PORTSMOUTH NAVAL SHIPYARD
KITTERY, MAINE

REPLACE STEAM & CONDENSATE
GOODRICH AVENUE & SICARD STREET

GOODRICH AVENUE – SHEET 2 OF 2

MAXIMO No.: 7725970

EPROJECT NO.: 1331743

CONSTR. CONTR. NO.

NAVFAC DRAWING NO. 12679262

SHEET 12 OF 29

C-103 MS-14-1224

DRAWFORM REVISION: 10 MARCH 2009

FILE NAME: U:\bq-207aa – steam\CADD\Roadways\03_Structure\BQ-207AA-C-101-03.dwg LAYOUT NAME: C-103 PLOTTED: Tuesday, August 05, 2014 – 2:41pm USER: Wronsk_V

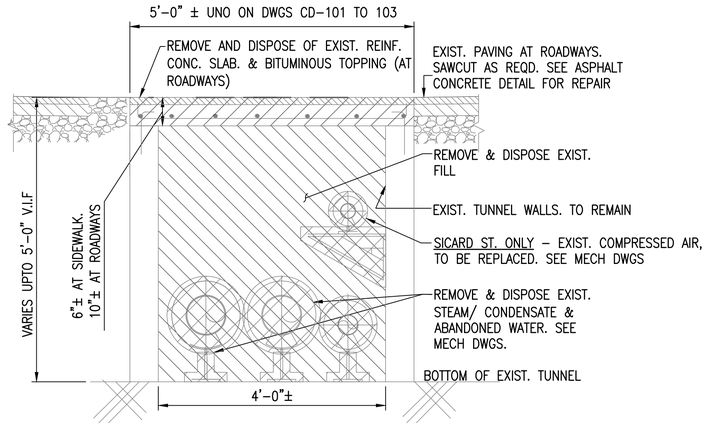

SECTION 1
SCALE: 3/4" = 1'-0" CD101, CD102, CD103

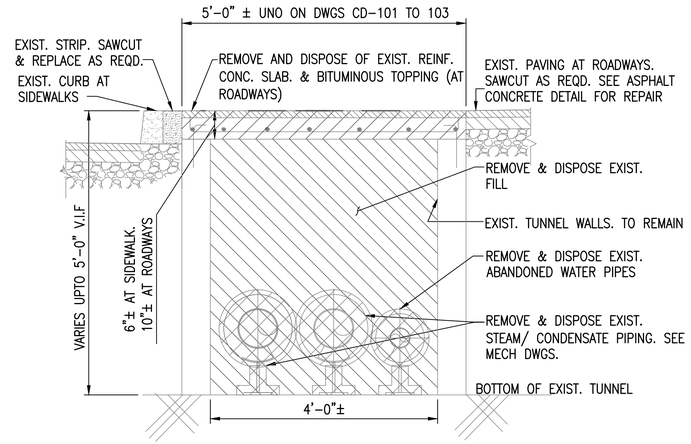

SECTION 2
SCALE: 3/4" = 1'-0" CD102, CD103

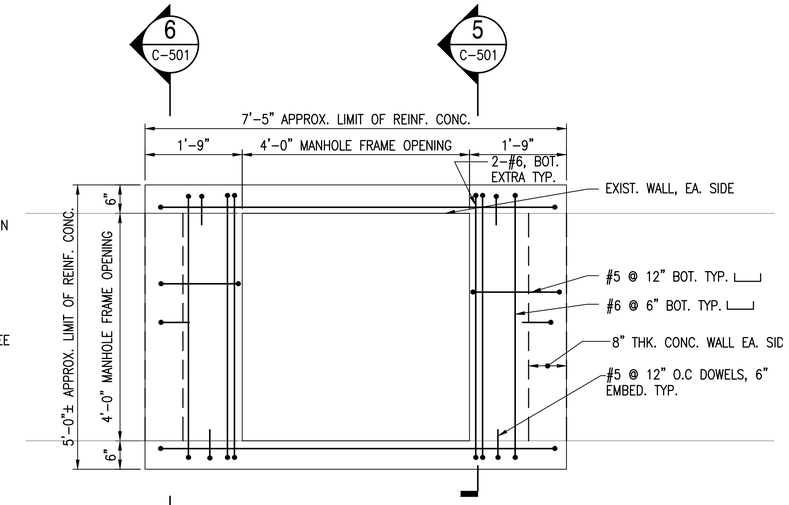

MANHOLE PLAN
SCALE: 3/4" = 1'-0"

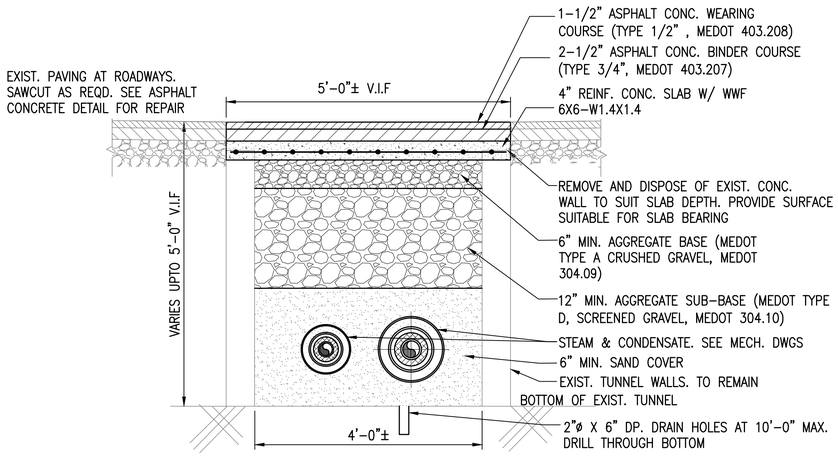

SECTION 3
SCALE: 3/4" = 1'-0" C-101, C-102, C-103

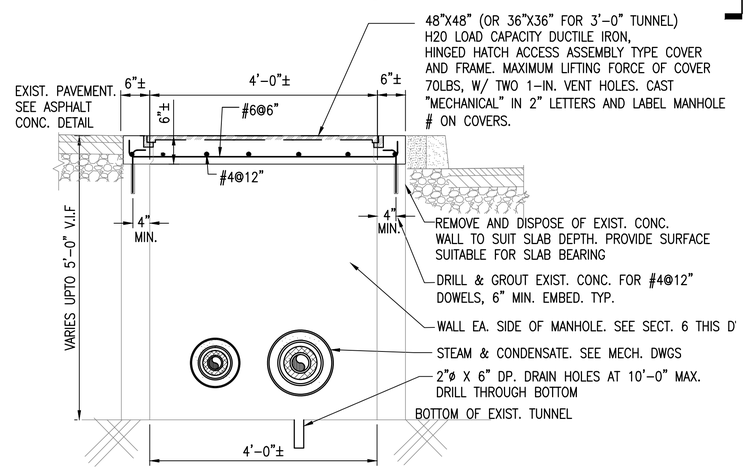

SECTION 5
SCALE: 3/4" = 1'-0" C-501

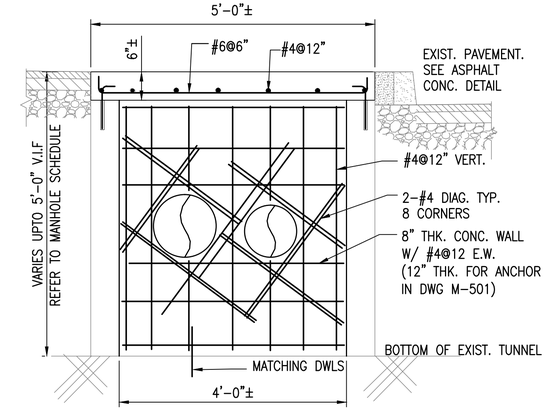

SECTION 6
SCALE: 3/4" = 1'-0" C-501

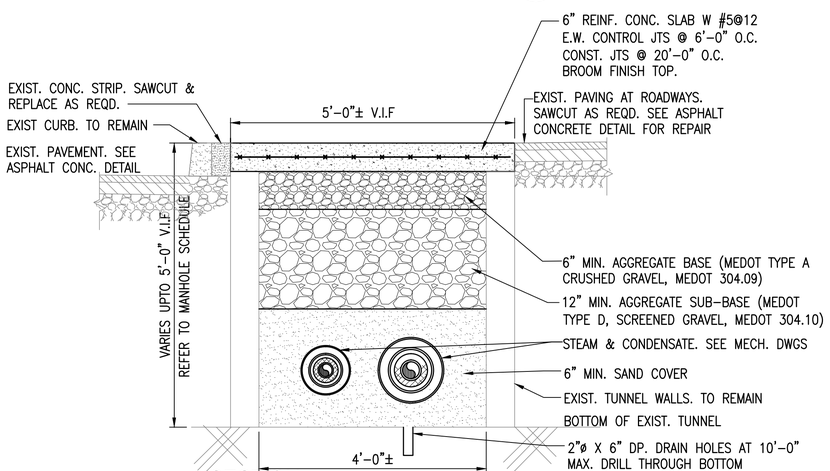

SECTION 4
SCALE: 3/4" = 1'-0" C-101, C-102, C-103

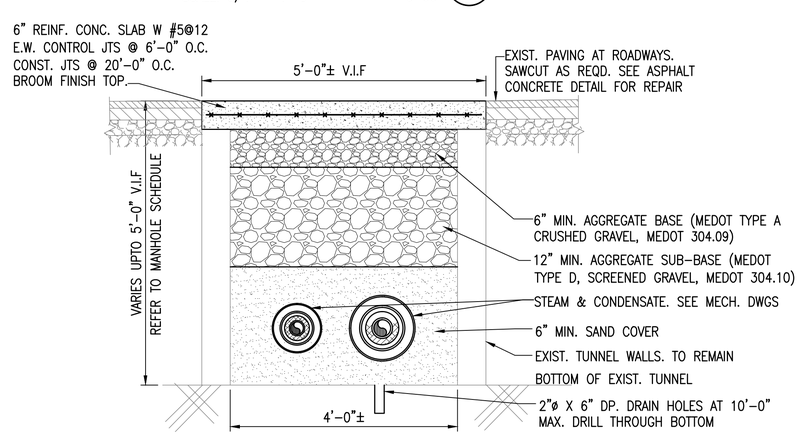

SECTION 9
SCALE: 3/4" = 1'-0" C-101, C-102, C-103

GRAPHIC SCALE
0 1' 2' 3'
SCALE:3/4"=1'

SYM	DESCRIPTION	DATE	APPR

NAVFAC

COMMONWEALTH OF MASSACHUSETTS ROBERT G. NJOROGE CIVIL No. 49642 REGISTERED PROFESSIONAL ENGINEER
SEAL

ENGINEERS FST Since 1914
FAY, SPOFFORD & THORNDIKE
5 BURLINGTON WOODS BURLINGTON, MA 01803
A/E INFO

APPROVED
FOR COMMANDER NAVFAC
ACTIVITY
SATISFACTORY TO DATE
DES RGN DRW RGN CHK VMG
PWD-ME DM/POC L. MAHAR
BRANCH MANAGER
CHIEF ENG/ARCH
FIRE PROTECTION

DEPARTMENT OF THE NAVY
NAVAL FACILITIES ENGINEERING COMMAND ~ MID-ATLANTIC
PUBLIC WORKS DEPARTMENT – MAINE
NAVAL SHIPYARD – PORTSMOUTH, NH
PORTSMOUTH NAVAL SHIPYARD KITTERY, MAINE
REPLACE STEAM & CONDENSATE
GOODRICH AVENUE & SICARD STREET
DETAILS – SHEET 1 OF 2

MAXIMO No.: 7725970
EPROJECT NO.: 1331743
CONSTR. CONTR. NO.
NAVFAC DRAWING NO. 12679263
SHEET 13 OF 29
C-501 MS-14-1225

DRAWFORM REVISION: 10 MARCH 2009

FILE NAME: U:\bq-207aa – steam\CADD\Roadways\03_Structural\B0-207AA-C-501-02.dwg LAYOUT NAME: C-501 PLOTTED: Tuesday, August 05, 2014 – 2:46pm USER: Wronsk_V

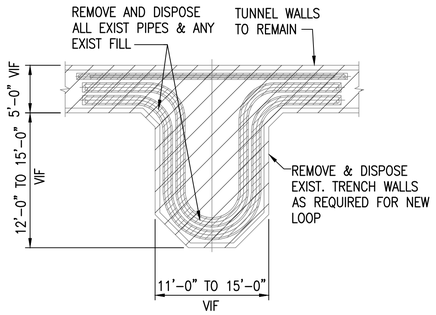

DETAIL (A)
SCALE: NOT TO SCALE — CD101, CD102, CD103

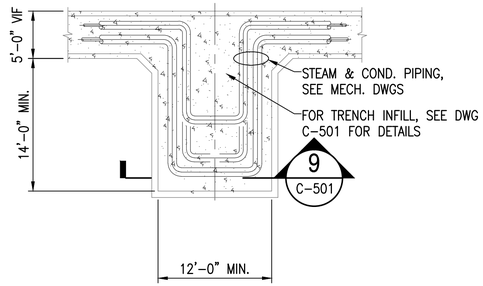

DETAIL (B)
SCALE: NOT TO SCALE — C-101, C-102, C-103

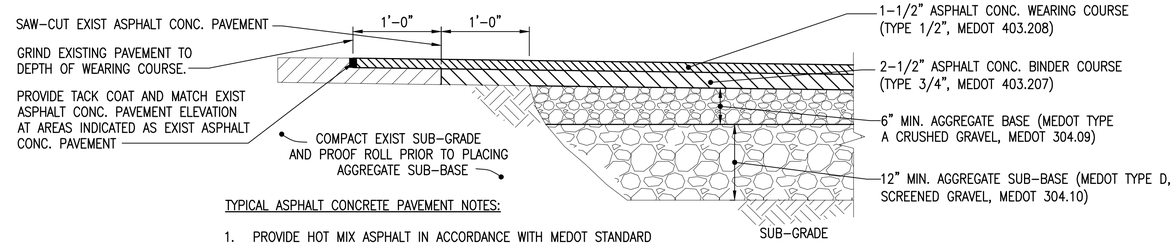

TYPICAL ASPHALT CONCRETE PAVEMENT NOTES:

1. PROVIDE HOT MIX ASPHALT IN ACCORDANCE WITH MEDOT STANDARD SPECIFICATIONS, DIVISION 400 – PAVEMENTS.
2. PROVIDE SUB-BASE AND BASE MATERIALS IN ACCORDANCE WITH MEDOT STANDARD SPECIFICATIONS, DIVISION 300 – BASES.
3. MATERIALS SHALL COMPLY WITH APPLICABLE SECTIONS OF MEDOT SPECIFICATIONS DIVISION 700 – MATERIALS.

TYPICAL ASPHALT CONCRETE DETAIL - NON C.I.A
SCALE: NOT TO SCALE

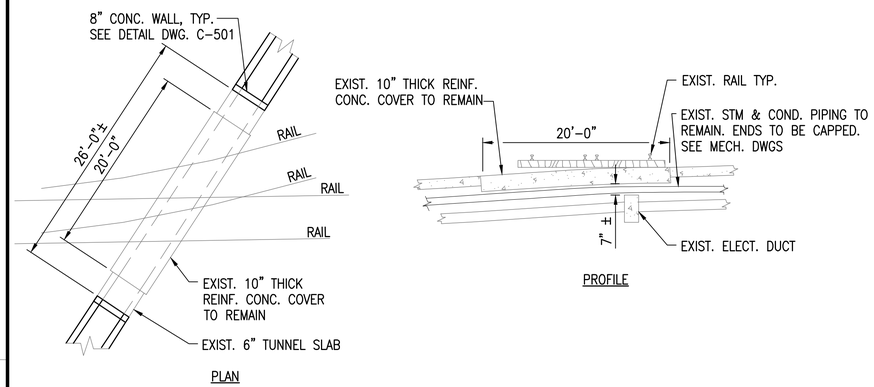

PLAN

PROFILE

DETAIL (C)
SCALE: NOT TO SCALE — CD102

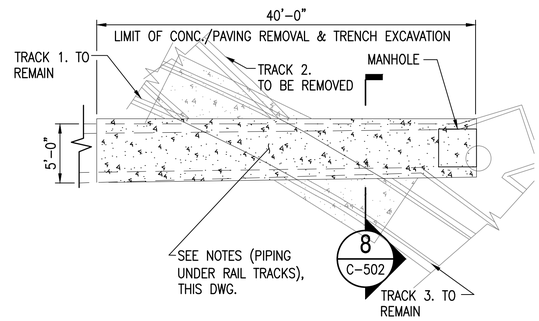

DETAIL (F)
SCALE: NOT TO SCALE — C-103

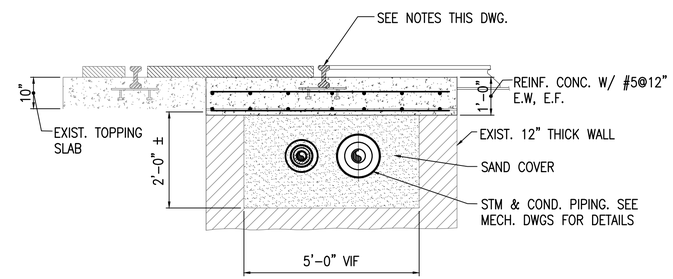

SECTION (8)
SCALE: NOT TO SCALE — C-103

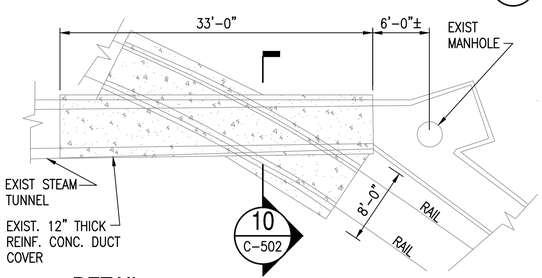

DETAIL (D)
SCALE: NOT TO SCALE — CD103

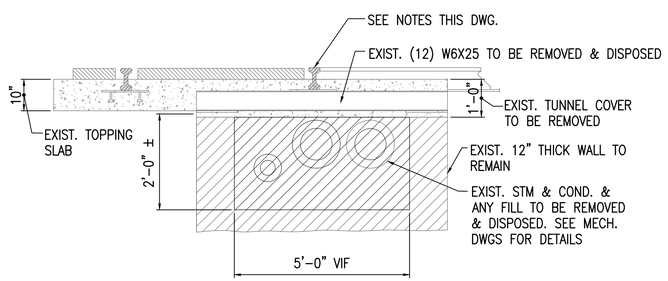

SECTION (10)
SCALE: NOT TO SCALE — C-502

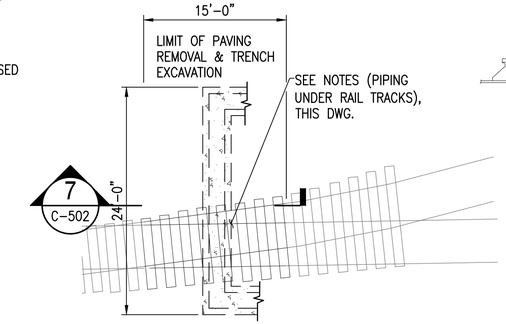

DETAIL (E)
SCALE: NOT TO SCALE — C-102

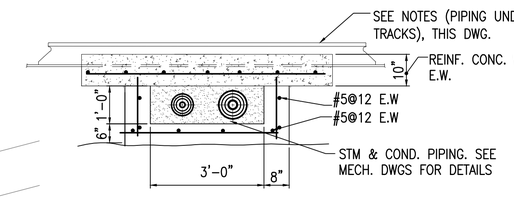

SECTION (7)
SCALE: NOT TO SCALE — C-102

DETAIL (E)
SCALE: NOT TO SCALE — C-103

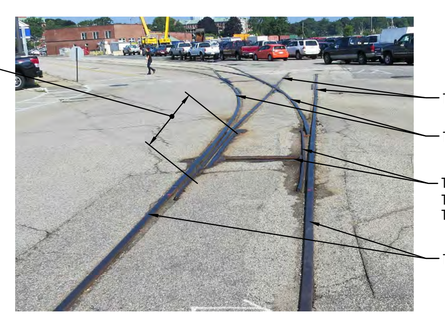

DETAIL (F)
SCALE: NOT TO SCALE — C-103

NOTES - PIPING UNDER RAIL TRACKS :

1. REMOVE & DISPOSE EXISTING CONCRETE, PAVING, W BEAMS & FILL AT RAIL TRACKS WITHOUT DAMAGING RAIL ANCHOR PLATES AND DISTURBING THE RAIL TRACKS. SHORE RAIL TRACKS AS REQUIRED TO MAINTAIN ALIGNMENT AND ELEVATION DURING TRENCH RECONSTRUCTION WORK.
2. PROVIDE STEAM & CONDENSATE PIPES PER MECHANICAL DRAWING.
3. PROVIDE PIPE COVER, FILL, WALLS & SLAB.
4. REATTACH RAIL TRACKS, TIES AND ANCHORS.

GRAPHIC SCALE

SYM	DESCRIPTION	DATE	APPR

NAVFAC

COMMONWEALTH OF MASSACHUSETTS — ROBERT G. NJOROGE — CIVIL — No. 49642 — REGISTERED PROFESSIONAL ENGINEER — SEAL

ENGINEERS FST Since 1914
FAY, SPOFFORD & THORNDIKE
5 BURLINGTON WOODS
BURLINGTON, MA 01803
A/E INFO

APPROVED
FOR COMMANDER NAVFAC
ACTIVITY
SATISFACTORY TO DATE
DES RGN DRW RGN CHK VMG
PWD–ME EM/POC L. MAHAR
BRANCH MANAGER
CHIEF ENG/ARCH
FIRE PROTECTION

DEPARTMENT OF THE NAVY
NAVAL FACILITIES ENGINEERING COMMAND
PUBLIC WORKS DEPARTMENT – MAINE
NAVAL FACILITIES ENGINEERING COMMAND ~ MID-ATLANTIC
NAVAL SHIPYARD – PORTSMOUTH, NH
PORTSMOUTH NAVAL SHIPYARD
KITTERY, MAINE
REPLACE STEAM & CONDENSATE
GOODRICH AVENUE & SICARD STREET
DETAILS – SHEET 2 OF 2

MAXIMO No.: 7725970
EPROJECT NO.: 1331743
CONSTR. CONTR. NO.
NAVFAC DRAWING NO. 12679264
SHEET 14 OF 29
C-502 | MS-14-1226

DRAWFORM REVISION: 10 MARCH 2009

FILE NAME: U:\bq-207aa – steam\CADD\Roadways\03_Structural\BQ-207AA-C-501-02.dwg LAYOUT NAME: C-502 PLOTTED: Wednesday, August 06, 2014 – 12:04pm USER: Wronsk_V

LEGEND:

- CONNECT NEW WORK TO EXISTING
- LIMIT OF DEMOLITION
- FEATURES TO BE PROVIDED UNDER THIS CONTRACT SHOWN THUS
- EXISTING FEATURES SHOWN THUS
- RISER UP
- RISER DOWN
- BRANCH–TOP CONNECTION
- TEE DOWN
- TEE
- UNION
- FLANGE
- CONCENTRIC REDUCER
- DIRECTION OF FLOW
- DIRECTION OF DOWNWARD PITCH
- CAP ON END OF PIPE
- STRAINER
- TRAP
- BALL VALVE
- BUTTERFLY VALVE

- —— CR —— CONDENSATE RETURN
- —— FW —— FRESH WATER
- —— CA —— COMPRESSED AIR, 150 PSI
- —— SS —— SANITARY SEWER
- —— HPS —— HIGH PRESSURE STEAM, 125 PSI
- —— HWS —— HOT WATER SUPPLY
- —— HWR —— HOT WATER RETURN
- —— ST/CD —— STEAM/CONDENSATE
- —— T —— TELEPHONE
- —— E —— ELECTRICAL
- —— SD —— STORM DRAIN
- (1) DEMOLITION / REMOVAL KEYNOTE NUMBER
- [1] NEW WORK KEYNOTE NUMBER
- PIPELINE ANCHOR
- ALIGNMENT GUIDE
- DOUBLE EXPANSION JOINT WITH ANCHOR
- (ST) EXISTING TO REMAIN
- EXISTING TO REMOVE – BASE BID
- EXISTING TO REMOVE – OPTIONS 1 & 2
- (ST) MH # STEAM MANHOLE
- STHH STEAM HANDHOLE
- (ST) STV STEAM VALVE

EXPANSION JOINT SCHEDULE

MARK	EJ–1	EJ–2
LOCATION	MH161	MH161
FLUID	HPS	CONDENSATE
STM PRESS	125	125
TEMPERATURE	410	250
PRESS CLASS	150	150
PIPE SIZE, IN	4	3
TYPE	DOUBLE	DOUBLE
*TOTAL EXPANSION, IN	8	4
BODY END	WELDED	WELDED
SLIP END	PLAIN	PLAIN
ANCHOR BASE	YES	YES
DIRT LEG	NO	NO
SERVICE CONNECTION	NO	NO
PACKING CYLINDER	STANDARD	STANDARD
RING PACKING	GRAPHITE	GRAPHITE
DESIGN BASED ON	ATS TP2	ATS TP2

* EACH DIRECTION

SEE DETAILS ON DRAWING NO. M–502

ABBREVIATIONS:

ABAND	ABANDONED
BLDG	BUILDING
CA	COMPRESSED AIR
CH	CHANNEL
CD, CND	CONDENSATE
CONC	CONCRETE
CR	CONDENSATE RETURN
C.Y.	CUBIC YARD
DDT	DRAINABLE, DRYABLE, TESTABLE
DN	DOWN
EJ	EXPANSION JOINT
ELEC	ELECTRIC
EXIST	EXISTINTG
FT	FOOT, FEET
FRP	FIBER REINFORCED PLASTIC
FW	FRESH WATER
GALV	GALVANIZED
H	HIGH
HDPE	HIGH DENSITY POLYETHYLENE
HOR	HORIZONTAL
HPS	HIGH PRESSURE STEAM
HW	HOT WATER
HWR	HOT WATER RETURN
HWS	HOT WATER SUPPLY
ID	INSIDE DIAMETER
IG	INTERMEDIATE GUIDE
LG	LONG
LPS	LOW PRESSURE STEAM
MAX	MAXIMUM
MIN	MINIMUM
MFR'S	MANUFACTURER'S
MH	MANHOLE
NIC	NOT IN CONTRACT
OD	OUTSIDE DIAMETER
P	PUMP
PCR	PUMPED CONDENSATE RETURN
PG	PRIMARY GUIDE
RCP	REINFORCED CONCRETE PIPE
SD	STORM DRAIN
SHT	SHEET
SP	SUMP PUMP
SS	SANITARY SEWER
SST	STAINLESS STEEL
STA	STATION
STHH	STEAM HANDHOLE
STM	STEAM
STMH	STEAM MANHOLE
TELE	TELEPHONE
TH	THICK
TYP	TYPICAL
VERT	VERTICAL
VIF	VERIFY IN FIELD
W	WATER

GENERAL NOTES:

1. THE GOODRICH AVE. AND SICARD ST. EXISTING CONDITIONS ARE BASED ON SURVEY PREPARED BY SURVEY AND MAPPING CONSULTANTS (SMC), MADE APRIL 2014.
2. ELEVATIONS, IN US SURVEY FEET, ARE REFERED TO THE NORTH AMERICAN VERTICAL DATUM (NAVD 88).
3. ALL WORK SHALL BE IN ACCORDANCE WITH THE 2012 INTERNATIONAL MECHANICAL CODE (IMC), ASME B31.1 FOR PRESSURE PIPING, AND UFC'S.
4. THE PROJECT HAS THREE BID OPTIONS:
   - BASE BID: GOODRICH AVE FROM MH 149A TO MH 170.
   - BID OPTION 1: CONNECTION FROM GOODRICH AVE TO BUILDING 154.
   - BID OPTION 2: SICARD ST TO BUILDING 29.
5. PROVIDE PIPE IDENTIFICATION MARKERS WITH FLOW DIRECTION IN EVERY MANHOLE.
6. SUBSURFACE UTILITY LINES AND FEATURES, AS SHOWN HEREIN, WERE COMPILED FROM FIELD EVIDENCE AND/OR AVAILABLE RECORD INFORMATION, AND THEIR LOCATIONS ARE ONLY APPROXIMATE. ACTUAL LOCATIONS MUST BE DETERMINED IN THE FIELD.
7. REMOVAL OF EXISTING PIPING SHALL INCLUDE REMOVAL OF PIPING, INSULATION, JACKETING, GUIDES, SUPPORTS, ANCHORS, AND ACCESSORIES.
8. PIPING WHICH IS EXPOSED DURING EXCAVATION AND IS NOT TO BE DEMOLISHED SHALL BE SUPPORTED, BRACED OR OTHERWISE PROTECTED DURING CONSTRUCTION ACTIVITIES.
9. PRIOR TO ENTERING VAULTS, MANHOLES OR OTHER CONFINED SPACES, THE CONTRACTOR SHALL MONITOR FOR HAZARDOUS GASES. THIS MONITORING SHALL CONTINUE WHILE WORK IS BEING PERFORMED IN THE MANHOLE OR CONFINED SPACE.
10. CONSTRUCTION OF UTILITIES SHALL BE PERFORMED IN THE DRY. PROVIDE DEWATERING SYSTEM FOR ALL EXCAVATIONS BELOW WATER TABLE TO MAINTAIN EXCAVATION SUBGRADE IN DRY CONDITION (LOWER THE GROUNDWATER 2 FT. BELOW THE BOTTOM OF EXCAVATION).
11. PROVIDE DETECTABLE MAGNETIC UTILITY WARNING AND IDENTIFICATION TAPE OVER ALL BURIED UTILITY PIPING.
12. ALL UNDERGROUND STEAM PIPING SHALL BE PREFABRICATED DRAINABLE, DRYABLE AND TESTABLE TYPE, PIPE GUIDES SHALL BE AN INTEGRAL PART OF PIPING SYSTEM.
13. HIGH PRESSURE STEAM SERVICE DESIGN PRESSURE IS 125 PSI, TEMPERATURE IS 410°F. CONDENSATE RETURN SERVICE DESIGN PRESSURE IS 125 PSI, TEMPERATURE 250°F.
14. STEAM AND CONDENSATE DIRECT BURIED PIPE SHALL BE PREFABRICATED MATERIAL CONSISTED OF STEEL CARRIER PIPE, INSULATION, STEEL CONDUIT AND OUTER WATERPROOF INSULATION/ENCASEMENT.
15. DIRECT BURIED JOINTS SHALL BE SEALED UNDERGROUND WITH PRESSURE–TESTABLE JOINT CLOSURES TO MAINTAIN 100% WATER RESISTANCE.
16. CONTRACTOR SHALL COORDINATE INTERRUPTION TIME OF HIGH PRESSURE STEAM AND CONDENSATE RETURN WITH PNSY. ALL OTHER UTILITIES, SUCH AS WATER, SEWER, DRAIN, ELECTRICITY, TELEPHONE, MUST BE UNINTERRUPTED DURING CONSTRUCTION OF THIS PROJECT.
17. PROVIDE REMOVABLE INSULATION COVERS FOR VALVES IN MANHOLES.
18. CONTRACTOR IS RESPONSIBLE FOR PROVIDING THE CORRECT QUANTITY OF PIPE SUPPORTS AND GUIDES BASED ON DRAWINGS AND SPECIFICATIONS, AS WELL AS MANUFACTURERS RECOMMENDED INSTALLATION GUIDELINES.
19. A CERTIFIED INDUSTRIAL HYGIENIST SHALL CREATE HAZARD ABATEMENT PLANS FOR EACH HAZARDOUS MATERIAL, WHICH SHALL BE ABATED IN ACCORDANCE WITH SPECIFIC HAZARD ABATEMENT PLANS, ALL STATE AND LOCAL LAWS, AND PORTSMOUTH NAVAL SHIPYARD REQUIREMENTS. REFER TO PROJECT SPECIFICATIONS FOR APPROPRIATE DISPOSAL METHODS.

WORK NOTES:

[1] FOR CONDENSATE DRAIN PIPING IN MANHOLES, PROVIDE INSULATION FOR PERSONNEL PROTECTION. SEAL EXPOSED ENDS OF INSULATION WITH MANUFACTURER'S STANDARD SEALANT. PAINT EXPOSED ENDS OF INSULATION WITH SUITABLE PAINT WITH AN ALLOWABLE TEMPERATURE RANGE BETWEEN 140 AND 260 DEGREES FAHRENHEIT. DESIGN BASED ON HI–TEMP COATING #1027. PAINT COLOR SHALL BE GRAY.

[2] PAINT STEAM AND CONDENSATE PIPE IN MANHOLES WITH A INORGANIC ZINC RICH PRIMER. ACCEPTABLE ZINC RICH PRIMERS ARE PITTSBURGH METALHIDE 1001, SHERMAN WILLIAMS ZINC–CLAD 11 HS AND CARBOLINE CARBO–ZINC II. PRIMER THICKNESS 2 MIL MINIMUM DFT; 4 MILS MAXIMUM DFT. PAINT TOP COAT USING EPOXY POLYAMIDE PER MANUFACTURER'S INSTRUCTIONS.

STM	DESCRIPTION	DATE	APPR

NAVFAC

COMMONWEALTH OF MASSACHUSETTS
MICHAEL W. TRAVERS
MECHANICAL
No. 48711
REGISTERED PROFESSIONAL ENGINEER
SEAL

ENGINEERS
FST
Since 1914
FAY, SPOFFORD & THORNDIKE
5 BURLINGTON WOODS
BURLINGTON, MA 01803
A/E INFO

APPROVED
FOR COMMANDER NAVFAC
ACTIVITY
SATISFACTORY TO DATE

DES	YK	DRW	YK	CHK	MWT
PWD–ME DM/POC	L. MAHAR				

BRANCH MANAGER
CHIEF ENG/ARCH
FIRE PROTECTION

DEPARTMENT OF THE NAVY
NAVAL FACILITIES ENGINEERING COMMAND ~ MID-ATLANTIC
PUBLIC WORKS DEPARTMENT – MAINE
NAVAL FACILITIES ENGINEERING COMMAND
NAVAL SHIPYARD – PORTSMOUTH, NH
PORTSMOUTH NAVAL SHIPYARD
KITTERY, MAINE
REPLACE STEAM & CONDENSATE
GOODRICH AVENUE & SICARD STREET
LEGEND, ABBREVIATIONS, GENERAL NOTES & EXPANSION JOINT SCHEDULE

MAXIMO No.: 7725970
EPROJECT NO.: 1331743
CONSTR. CONTR. NO.
NAVFAC DRAWING NO.
12679265
SHEET 15 OF 29
M-001 MS-14-1227

DRAWFORM REVISION: 10 MARCH 2009

FILE NAME: U:\bq-207aa – steam\CADD\Roadways\04_Mechanical\BQ-207AA-M-001.dwg LAYOUT NAME: M-001 PLOTTED: Wednesday, August 06, 2014 – 12:26pm USER: Wronsk_V

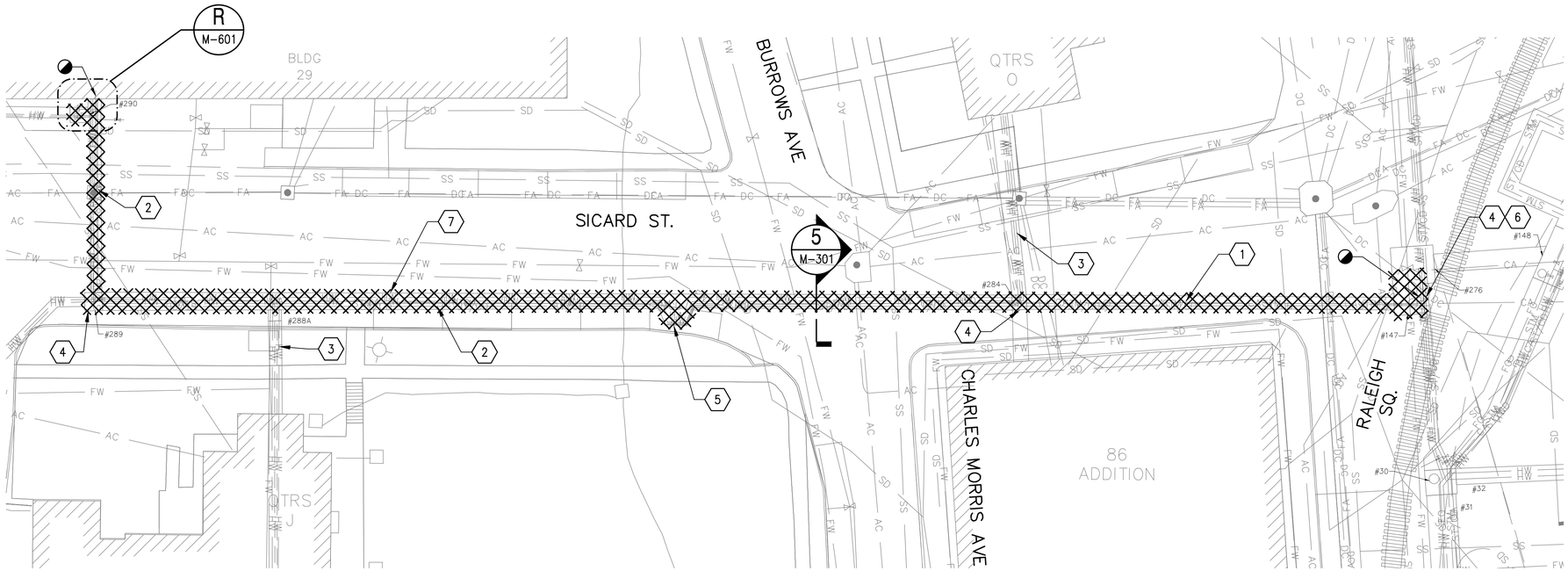

SICARD STREET

SCALE: 1"=20'

PLAN NORTH

DEMOLITION KEY NOTES:

1. REMOVE AND DISPOSE OF PIPING AND INSULATION IN CONCRETE TRENCH BELOW GROUND: 2-1/2" STM, 1-1/2" CND, 6" HWS/HWR (ABANDONED), AND 2" CA.
2. REMOVE AND DISPOSE OF PIPING AND INSULATION IN CONCRETE TRENCH BELOW GROUND, EXCEPT AS NOTED: 2-1/2" STM, 1-1/2" CND, 6" HWS/HWR (ABANDONED), AND 1-1/4" CA.
3. ABANDON BUILDING SERVICE PIPING IN CONCRETE TRENCH BELOW GROUND. CAP ENDS.
4. REMOVE AND DISPOSE OF PIPING, VALVES, AND INSULATION IN MANHOLE.
5. REMOVE AND DISPOSE OF STM, CR, HWS, HWR, & CA EXPANSION LOOPS, HANGERS, SUPPORTS, AND INSULATION.
6. CLOSE EXISTING STEAM, CONDENSATE, AND COMPRESSED AIR SHUT-OFF VALVES IN MANHOLE.
7. BID OPTION 2: SICARD ST TO BUILDING 29.

KEY PLAN

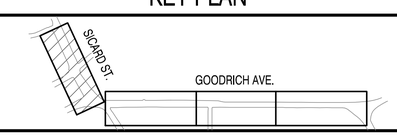

GRAPHIC SCALE

0 10' 20' 40'

SCALE:1"=20'

SYM	DESCRIPTION	DATE	APPR

NAVFAC

COMMONWEALTH OF MASSACHUSETTS
MICHAEL W. TRAVERS
MECHANICAL
No. 48711
REGISTERED PROFESSIONAL ENGINEER
SEAL

ENGINEERS
FST
Since 1914
FAY, SPOFFORD & THORNDIKE
5 BURLINGTON WOODS
BURLINGTON, MA 01803
A/E INFO

APPROVED
FOR COMMANDER NAVFAC
ACTIVITY
SATISFACTORY TO DATE

DES	YK	DRW	YK	CHK	MWT
PWD-ME EM/POC	L. MAHAR				
BRANCH MANAGER					
CHIEF ENG/ARCH					
FIRE PROTECTION					

DEPARTMENT OF THE NAVY
NAVAL FACILITIES ENGINEERING COMMAND
PUBLIC WORKS DEPARTMENT - MAINE
NAVAL FACILITIES ENGINEERING COMMAND ~ MID-ATLANTIC
NAVAL SHIPYARD - PORTSMOUTH, NH
PORTSMOUTH NAVAL SHIPYARD
KITTERY, MAINE
REPLACE STEAM & CONDENSATE
GOODRICH AVENUE & SICARD STREET
SICARD STREET - DEMOLITION PLAN

MAXIMO No.: 7725970
EPROJECT NO.: 1331743
CONSTR. CONTR. NO.
NAVFAC DRAWING NO.
12679266
SHEET 16 OF 29
MD101 MS-14-1228

DRAWFORM REVISION: 10 MARCH 2009

FILE NAME: U:\bq-207aa - steam\CADD\Roadways\04_Mechanical\BQ-207AA-MD101-03.dwg LAYOUT NAME: MD101 PLOTTED: Wednesday, August 06, 2014 - 12:25pm USER: Wronsk_V

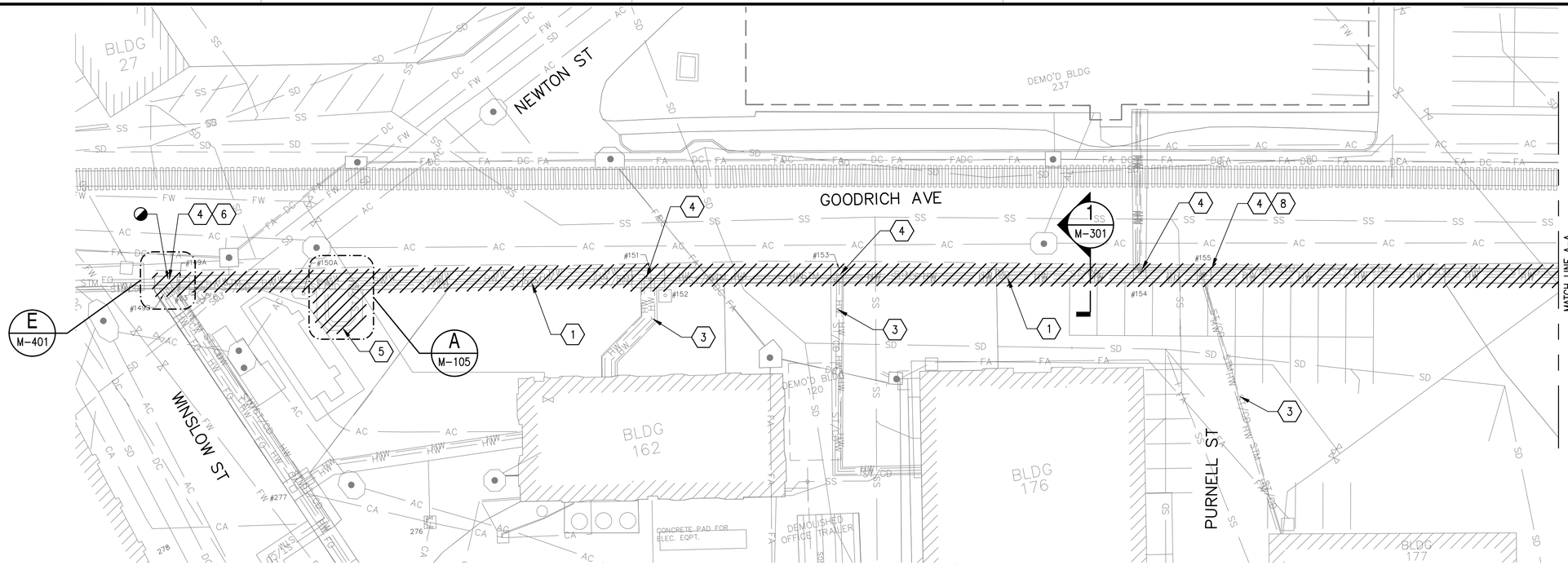

GOODRICH AVENUE

SCALE: 1"=20'

PLAN NORTH

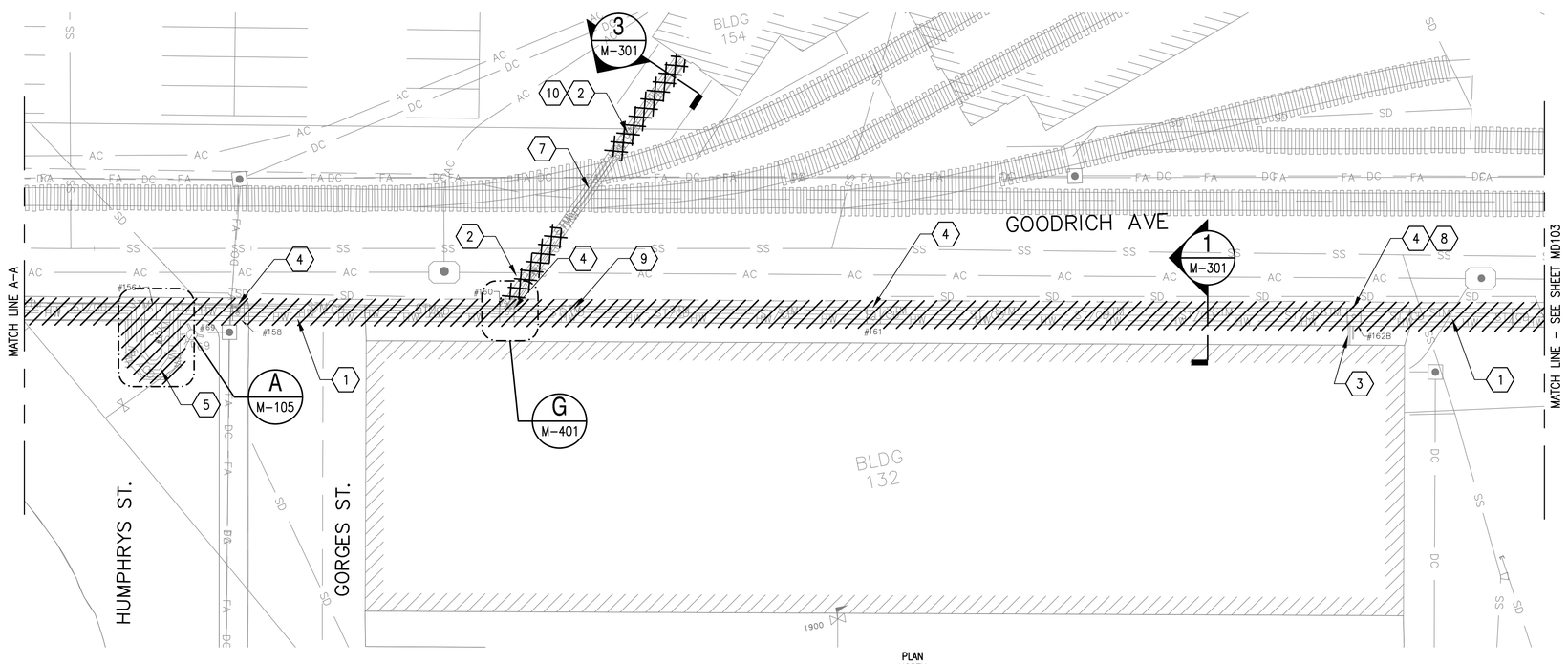

GOODRICH AVENUE

SCALE: 1"=20'

PLAN NORTH

DEMOLITION KEY NOTES:

1. REMOVE AND DISPOSE OF PIPING AND INSULATION IN CONCRETE TRENCH BELOW GROUND: 4" STM, 3" CND, AND 8" HWS/HWR (ABANDONED).
2. REMOVE AND DISPOSE OF BUILDING SERVICE PIPING AND INSULATION IN CONCRETE TRENCH BELOW GROUND.
3. ABANDON BUILDING SERVICE PIPING IN CONCRETE TRENCH BELOW GROUND, EXCEPT AS NOTED. CAP ENDS.
4. REMOVE AND DISPOSE OF EXISTING STEAM, CONDENSATE, AND HOT WATER PIPING, VALVES, AND INSULATION IN MANHOLE.
5. REMOVE AND DISPOSE OF HWR & HWS EXPANSION LOOPS (ABANDONED) AND INSULATION.
6. CLOSE EXISTING STEAM AND CONDENSATE SHUT-OFF VALVES IN MANHOLE. COORDINATE VALVES SHUT-OFF WITH PNSY.
7. ABANDON EXIST STEAM AND HOT WATER PIPING IN CONCRETE TRENCH UNDER RAILS (~25 FT). CAP ENDS.
8. REMOVE AND DISPOSE OF EXISTING 4" STM AND 3" CR DOUBLE EXPANSION JOINTS WITH ANCHOR.
9. REMOVE AND DISPOSE OF EXISTING STM AND CR ANCHOR.
10. BID OPTION 1: CONNECTION FROM GOODRICH AVE TO BUILDING 154. IF BID OPTION 1 IS NOT AWARDED, REMAIN EXISTING HPS & CR SERVICE TO BUILDING 154.

KEY PLAN

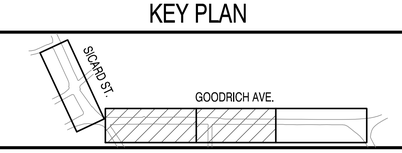

GRAPHIC SCALE

0 10' 20' 40'

SCALE:1"=20'

SYM	DESCRIPTION	DATE	APPR

NAVFAC

COMMONWEALTH OF MASSACHUSETTS
MICHAEL W. TRAVERS
MECHANICAL
No. 48711
REGISTERED PROFESSIONAL ENGINEER
SEAL

ENGINEERS
FST
Since 1914
FAY, SPOFFORD & THORNDIKE
5 BURLINGTON WOODS
BURLINGTON, MA 01803
A/E INFO.

APPROVED
FOR COMMANDER NAVFAC
ACTIVITY
SATISFACTORY TO DATE
DES YK DRW YK CHK MWT
PWD-ME DM/POC L. MAHAR
BRANCH MANAGER
CHIEF ENG/ARCH
FIRE PROTECTION

DEPARTMENT OF THE NAVY
NAVAL FACILITIES ENGINEERING COMMAND ~ MID-ATLANTIC
PUBLIC WORKS DEPARTMENT - MAINE
NAVAL FACILITIES ENGINEERING COMMAND
NAVAL SHIPYARD - PORTSMOUTH, NH
PORTSMOUTH NAVAL SHIPYARD
KITTERY, MAINE

REPLACE STEAM & CONDENSATE
GOODRICH AVENUE & SICARD STREET
GOODRICH AVENUE - DEMOLITION PLAN - SHEET 1 OF 2

MAXIMO No.: 7725970
EPROJECT NO.: 1331743
CONSTR. CONTR. NO.
NAVFAC DRAWING NO. 12679267
SHEET 17 OF 29
MD102 MS-14-1229

DRAWFORM REVISION: 10 MARCH 2009

FILE NAME: U:\pt-207aa - steam\CADD\Roadways\04_Mechanical\BQ-2072A-MD101-03.dwg LAYOUT NAME: MD102 PLOTTED: Wednesday, August 06, 2014 - 12:24pm USER: Wronsk_V

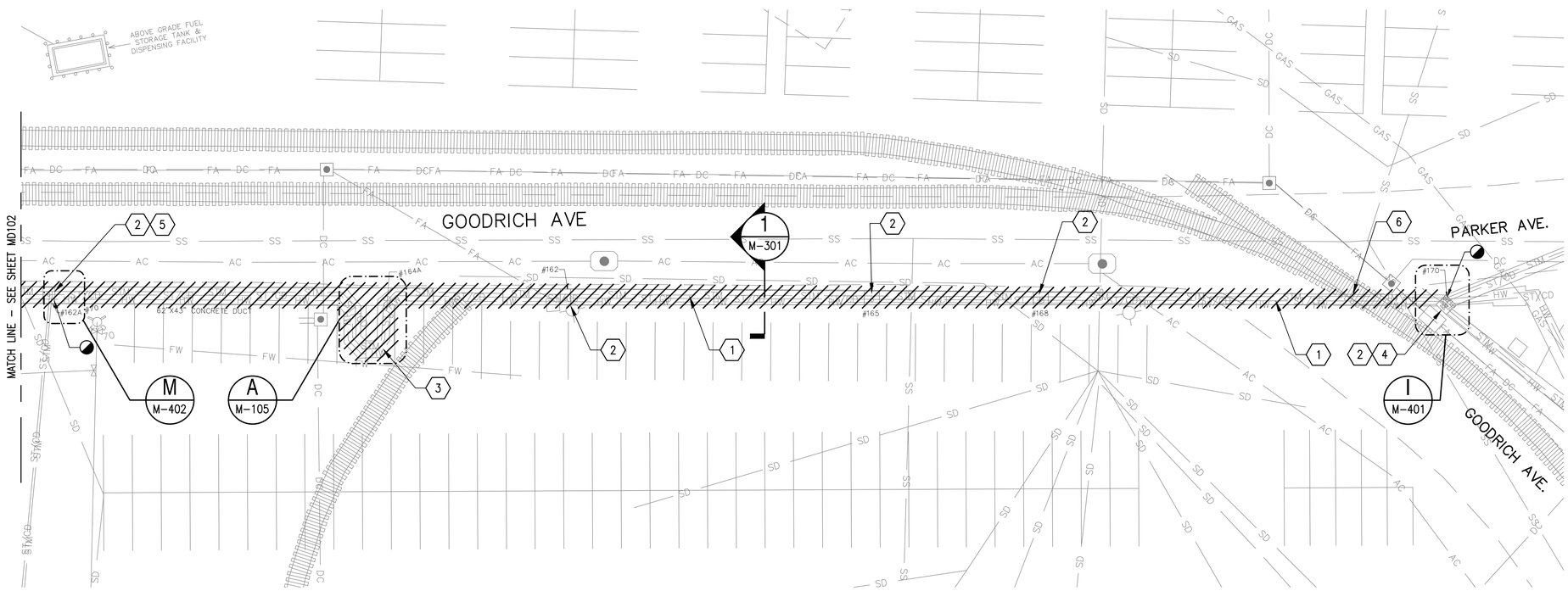

GOODRICH AVENUE

SCALE: 1"=20'

PLAN NORTH

DEMOLITION KEY NOTES:

1. REMOVE AND DISPOSE OF PIPING AND INSULATION IN CONCRETE TRENCH BELOW GROUND: 4" STM, 3" CND, 8" HWS (ABANDONED), AND 8" HWR (ABANDONED).
2. REMOVE AND DISPOSE OF EXISTING STEAM, CONDENSATE, AND HOT WATER PIPING, VALVES, AND INSULATION IN MANHOLE.
3. REMOVE AND DISPOSE OF HWR & HWS EXPANSION LOOPS (ABANDONED) AND INSULATION.
4. CLOSE EXISTING STEAM AND CONDENSATE SHUT-OFF VALVES IN MANHOLE. COORDINATE VALVES SHUT-OFF WITH PNSY.
5. DISCONNECT AND TEMPORARY CAP IN TRENCH EXISTING 1-1/2" STM AND 1" CR FROM BUILDING #168.
6. REMOVE AND DISPOSE OF EXISTING PIPING IN CONCRETE TRENCH UNDER RAILS. SEE STRUCTURAL DRAWINGS FOR DETAILS.

KEY PLAN

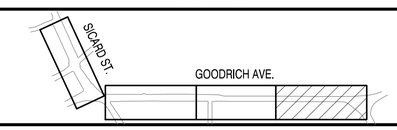

GRAPHIC SCALE

0 10' 20' 40'

SCALE:1"=20'

SYM	DESCRIPTION	DATE	APPR

NAVFAC

COMMONWEALTH OF MASSACHUSETTS
MICHAEL W. TRAVERS
MECHANICAL
No. 48711
REGISTERED PROFESSIONAL ENGINEER

SEAL

ENGINEERS
FST
Since 1914
FAY, SPOFFORD & THORNDIKE
5 BURLINGTON WOODS
BURLINGTON, MA 01803

A/E INFO.

APPROVED

FOR COMMANDER NAVFAC

ACTIVITY

SATISFACTORY TO DATE

DES YK | DRW YK | CHK MWT

PWD-ME DM/POC L. MAHAR

BRANCH MANAGER

CHIEF ENG/ARCH

FIRE PROTECTION

DEPARTMENT OF THE NAVY
NAVAL FACILITIES ENGINEERING COMMAND
PUBLIC WORKS DEPARTMENT – MAINE

NAVAL FACILITIES ENGINEERING COMMAND ~ MID-ATLANTIC
NAVAL SHIPYARD – PORTSMOUTH, NH

PORTSMOUTH NAVAL SHIPYARD
KITTERY, MAINE

REPLACE STEAM & CONDENSATE
GOODRICH AVENUE & SICARD STREET

GOODRICH AVENUE – DEMOLITION PLAN – SHEET 2 OF 2

MAXIMO No.: 7725970

EPROJECT NO.: 1331743

CONSTR. CONTR. NO.

NAVFAC DRAWING NO.
12679268

SHEET 18 OF 29

MD103 | MS-14-1230

DRAWFORM REVISION: 10 MARCH 2009

FILE NAME: U:\bq-207aa – steam\CADD\Roadways\04_Mechanical\BQ-2074A-MD101-03.dwg LAYOUT NAME: MD103 PLOTTED: Wednesday, August 06, 2014 – 12:23pm USER: Wronsk_V

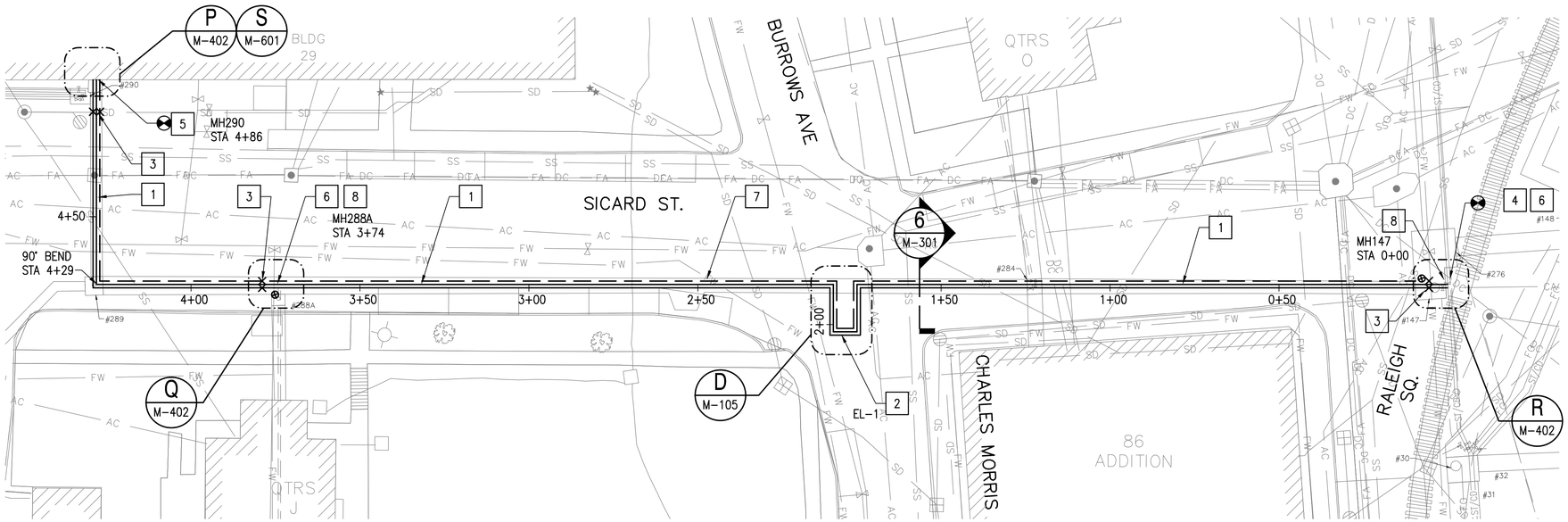

SICARD STREET

SCALE: 1"=20'

KEY NOTES:

1. PROVIDE 2-1/2" HPS AND 1-1/2" CR, PRE-ENGINEERED, DIRECT BURIED. PROVIDE 1-1/4" CA, PVC COATED, DIRECT BURED. FOLLOW EXISTING TRENCH PATH.
2. PROVIDE EXPANSION LOOPS. DEMOLISH AND MODIFY EXISTING TRENCH WALLS AS REQUIRED TO ACCOMMODATE NEW LOOPS. FOR DETAILS SEE DRAWING NO. M-105.
3. PROVIDE CONCRETE ANCHORS ON HPS AND CR. SEE ANCHOR DETAIL ON DRAWING NO. M-501.
4. CONNECT TO EXISTING HPS, CR (VIF), AND CA IN MANHOLE. PROVIDE ISOLATION VALVES, INSULATE AS REQUIRED PER SPECIFICATIONS. PROVIDE REDUCERS IF REQUIRED.
5. CONNECT HPS, CR AND CA PIPE TO EXISTING IN BUILDING 29. PROVIDE ISOLATION VALVES, INSULATE AS REQUIRED PER SPECIFICATIONS.
6. PROVIDE CONDENSATE TRAP IN MANHOLE. SEE TRAP ASSEMBLY DETAIL ON DRAWING NO. M-502.
7. BID OPTION 2: SICARD ST TO BUILDING 29.
8. RECONSTRUCTED MANHOLE. FOR DETAILS SEE DRAWING NO. C-501, MANHOLE PLAN AND SECTION 6.

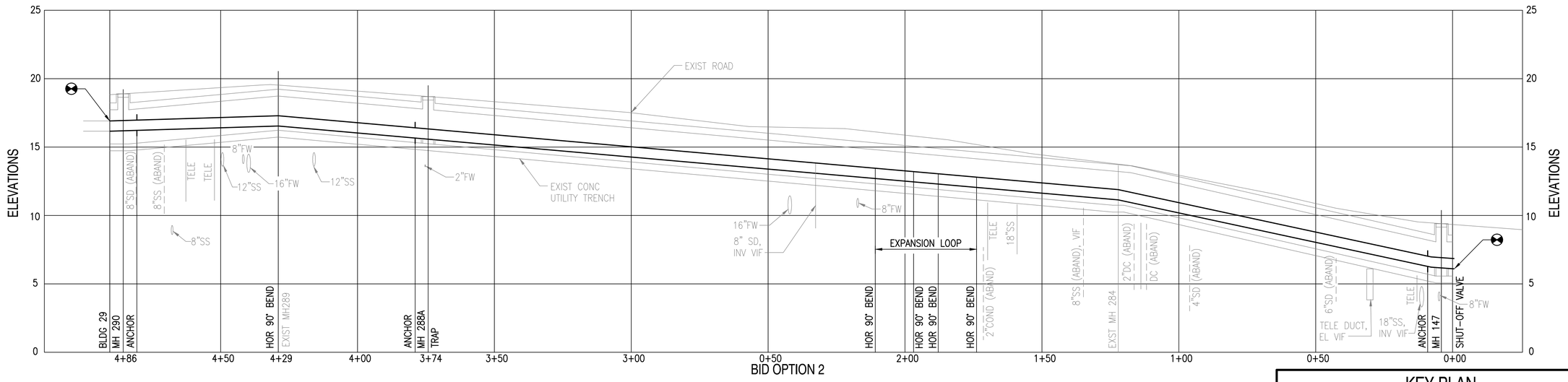

BID OPTION 2

2-1/2" HIGH PRESSURE STEAM IS SHOWN,
1-1/2" CONDENSATE AND COMPRESSED AIR RUN IN PARALLEL

PROFILE

SCALE: HOR – 1"=20', VERT – 1"=4'

KEY PLAN

GRAPHIC SCALE

0 10' 20' 40'

SCALE:1"=20'

APPR	
DATE	
DESCRIPTION	
SYM	

NAVFAC

COMMONWEALTH OF MASSACHUSETTS
MICHAEL W. TRAVERS
MECHANICAL
No. 48711
REGISTERED PROFESSIONAL ENGINEER
SEAL

ENGINEERS
FST
Since 1914
FAY, SPOFFORD & THORNDIKE
5 BURLINGTON WOODS
BURLINGTON, MA 01803
A/E INFO

APPROVED
FOR COMMANDER NAVFAC
ACTIVITY
SATISFACTORY TO DATE
DES YK DRW YK CHK MWT
PWD-ME DM/POC L. MAHAR
BRANCH MANAGER
CHIEF ENG/ARCH
FIRE PROTECTION

DEPARTMENT OF THE NAVY
NAVAL FACILITIES ENGINEERING COMMAND
PUBLIC WORKS DEPARTMENT – MAINE
PORTSMOUTH NAVAL SHIPYARD

NAVAL FACILITIES ENGINEERING COMMAND ~ MID-ATLANTIC
NAVAL SHIPYARD – PORTSMOUTH, NH

KITTERY, MAINE

REPLACE STEAM & CONDENSATE
GOODRICH AVENUE & SICARD STREET

SICARD STREET

MAXIMO No.: 7725970
EPROJECT NO.: 1331743
CONSTR. CONTR. NO.
NAVFAC DRAWING NO. 12679269
SHEET 19 OF 29
M-101 MS-14-1231

DRAWFORM REVISION: 10 MARCH 2009

FILE NAME: U:\bq-207aa – steam\CADD\Roadways\04_Mechanical\BQ-207AA-M-101-05.dwg LAYOUT NAME: M-101 PLOTTED: Wednesday, August 06, 2014 – 12:21pm USER: Wronsk_V

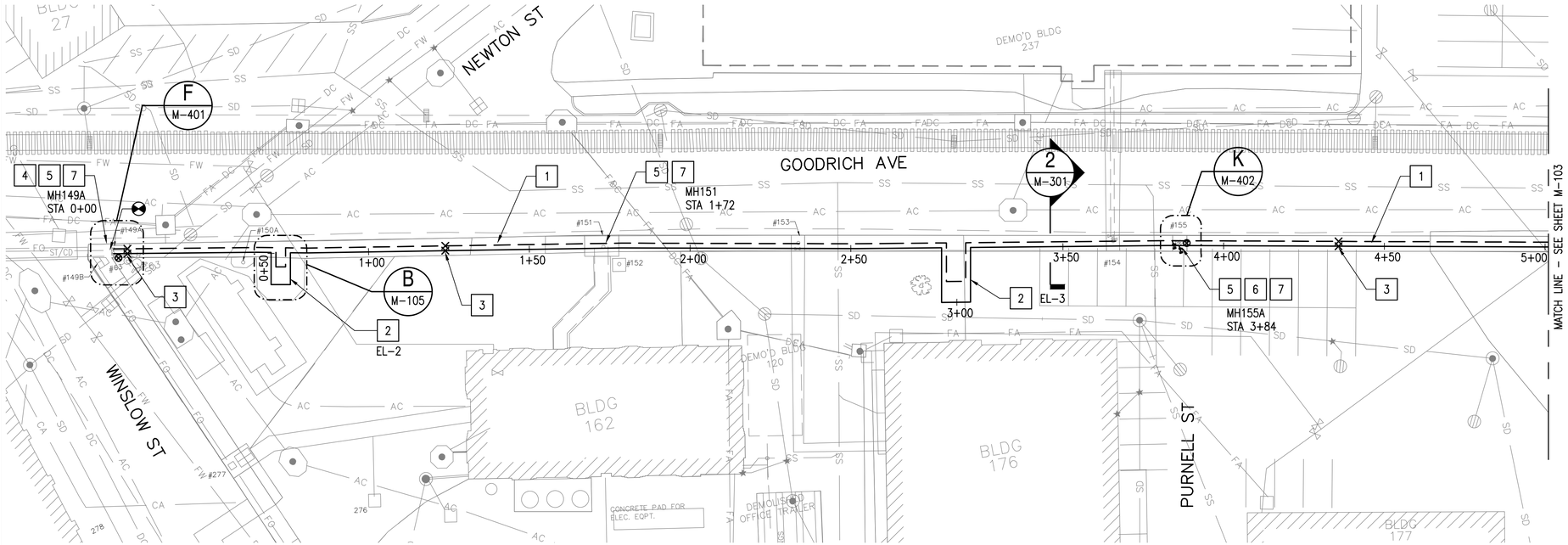

GOODRICH AVENUE

SCALE: 1"=20'

KEY NOTES:

1. PROVIDE 4" HPS AND 3" CR PIPES, PRE-ENGINEERED, DIRECT BURIED. FOLLOW EXISTING TRENCH PATH.
2. PROVIDE EXPANSION LOOPS. DEMOLISH AND MODIFY EXISTING TRENCH WALLS AS REQUIRED TO ACCOMMODATE LOOPS. FOR DETAILS SEE DRAWING NO. M-105.
3. PROVIDE CONCRETE ANCHORS ON HPS AND CR. SEE ANCHOR DETAIL ON DRAWING NO. M-501.
4. CONNECT TO EXISTING 4" HPS AND 3" CR IN MANHOLE. PROVIDE ISOLATION VALVES, INSULATE WITH REMOVABLE JACKET.
5. PROVIDE CONDENSATE TRAP IN MANHOLE. SEE TRAP ASSEMBLY DETAIL ON DRAWING NO. M-502.
6. PROVIDE 2" HPS AND 1-1/2" CR STABS WITH BALL VALVES IN MH155 FOR FUTURE CONNECTION TO BUILDING 177.
7. RECONSTRUCTED MANHOLE. FOR DETAILS SEE DRAWING NO. C-501, MANHOLE PLAN AND SECTION 6.

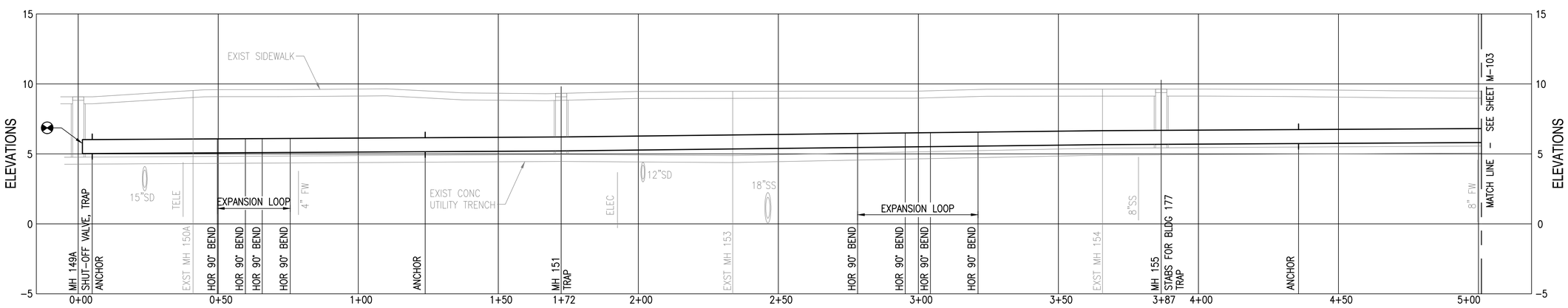

4" HIGH PRESSURE STEAM IS SHOWN,
3" CONDENSATE RUN IN PARALLEL

PROFILE

SCALE: HOR - 1"=20', VERT - 1"=4"

KEY PLAN

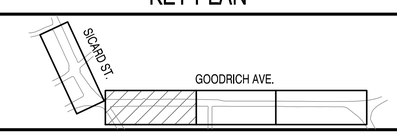

GRAPHIC SCALE

0 10' 20' 40'

SCALE:1"=20'

SYM	DESCRIPTION	DATE	APPR

NAVFAC

COMMONWEALTH OF MASSACHUSETTS
MICHAEL W. TRAVERS
MECHANICAL
No. 48711
REGISTERED PROFESSIONAL ENGINEER

SEAL

ENGINEERS
FST
Since 1914
FAY, SPOFFORD & THORNDIKE
5 BURLINGTON WOODS
BURLINGTON, MA 01803

A/E INFO

APPROVED

FOR COMMANDER NAVFAC

ACTIVITY

SATISFACTORY TO DATE

DES YK | DRW YK | CHK MWT

PWD-ME EM/POC L. MAHAR

BRANCH MANAGER

CHIEF ENG/ARCH

FIRE PROTECTION

DEPARTMENT OF THE NAVY
NAVAL FACILITIES ENGINEERING COMMAND ~ MID-ATLANTIC
PUBLIC WORKS DEPARTMENT - MAINE
NAVAL FACILITIES ENGINEERING COMMAND
NAVAL SHIPYARD - PORTSMOUTH, NH

PORTSMOUTH NAVAL SHIPYARD
KITTERY, MAINE

REPLACE STEAM & CONDENSATE
GOODRICH AVENUE & SICARD STREET

GOODRICH AVENUE - SHEET 1 OF 3

MAXIMO No.: 7725970

EPROJECT NO.: 1331743

CONSTR. CONTR. NO.

NAVFAC DRAWING NO.
12679270

SHEET 20 OF 29

M-102 | MS-14-1232

DRAWFORM REVISION: 10 MARCH 2009

FILE NAME: U:\bq-207aa - steam\CADD\Roodreyk\04_Mechanical\BQ-207AA-M-101-05.dwg LAYOUT NAME: M-102 PLOTTED: Wednesday, August 06, 2014 - 12:21pm USER: Wronsk_V

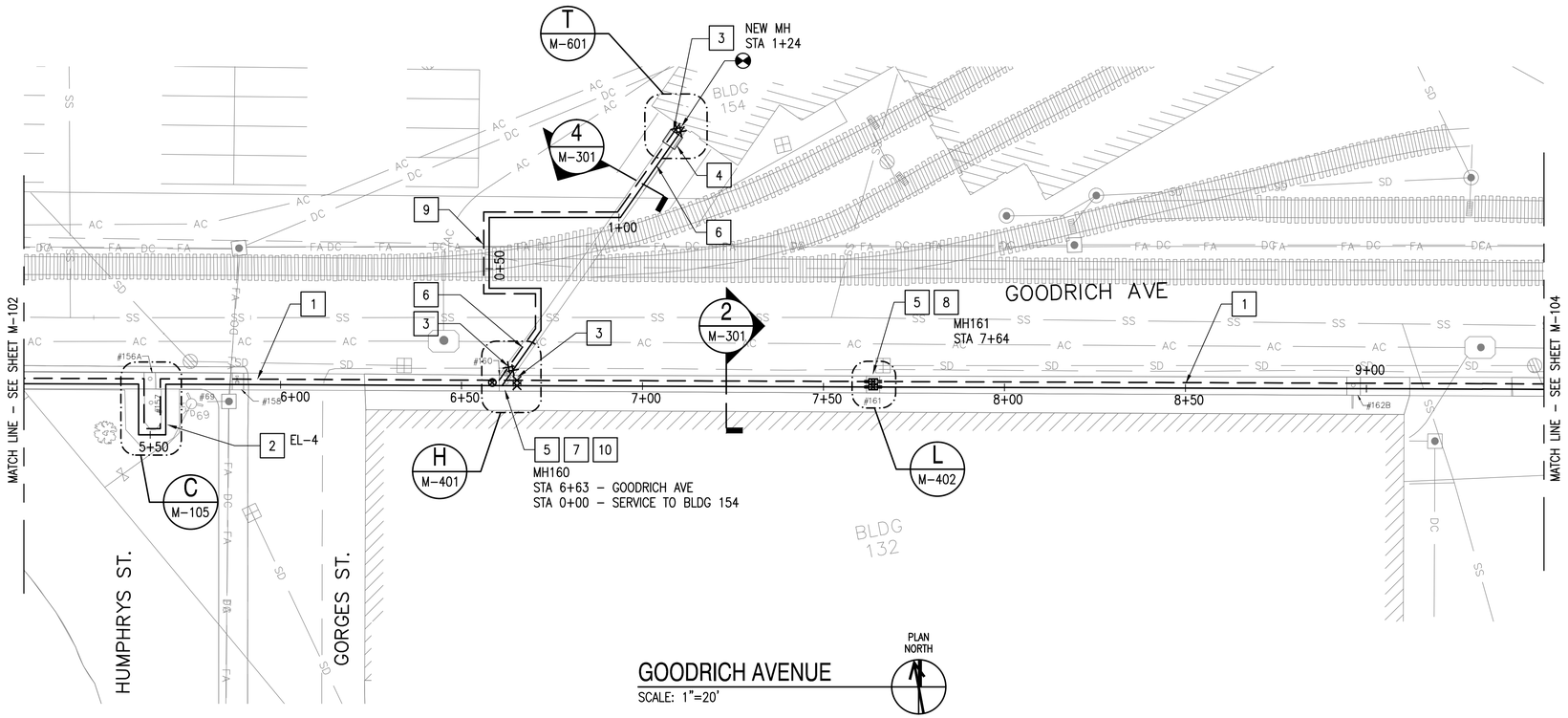

GOODRICH AVENUE

SCALE: 1"=20'

KEY NOTES:

1. PROVIDE 4" HPS AND 3" CR PIPES, PRE-ENGINEERED, DIRECT BURIED. FOLLOW EXISTING TRENCH PATH.
2. PROVIDE EXPANSION LOOPS. DEMOLISH AND MODIFY EXISTING TRENCH WALLS AS REQUIRED TO ACCOMMODATE LOOPS. FOR DETAILS SEE DRAWING NO. M-105.
3. PROVIDE CONCRETE ANCHORS ON HPS AND CR. SEE ANCHOR DETAIL ON DRAWING NO. M-501.
4. BID OPTION 1: CONNECTION FROM GOODRICH AVE TO BUILDING 154. PROVIDE NEW STEAM MANHOLE. IF OPTION 1 IS NOT AWARDED, RECONNECT EXISTING HPS AND CR SERVICE PIPES TO NEW MAINS.
5. RECONSTRUCTED MANHOLE. FOR DETAILS SEE DRAWING NO. C-501, MANHOLE PLAN AND SECTION 6.
6. BID OPTION 1: PROVIDE 2" HPS AND 1-1/2" CR SERVICE PIPES TO BUILDING 154, PRE-ENGINEERED, DIRECT BURIED. FOLLOW EXISTING TRENCH PATH.
7. PROVIDE CONDENSATE TRAP IN MANHOLE. SEE TRAP ASSEMBLY DETAIL ON DRAWING NO. M-502.
8. PROVIDE SLIP TYPE DOUBLE EXPANSION JOINT WITH ANCHOR ON 4" HPS AND 3" CR INSIDE OF MANHOLE. SEE EXPANSION JOINT DETAILS ON DRAWING NO. M-502
9. BID OPTION 1: RAIL ROAD TRACKS CROSSING. PROVIDE 2" HPS & 1-1/2" CR PRE-ENGINEERED PIPING, DIRECT BURIED, AS SHOWN.
10. PROVIDE ISOLATION VALVES ON 4" HPS AND 3" CR, INSULATE WITH REMOVABLE JACKET.

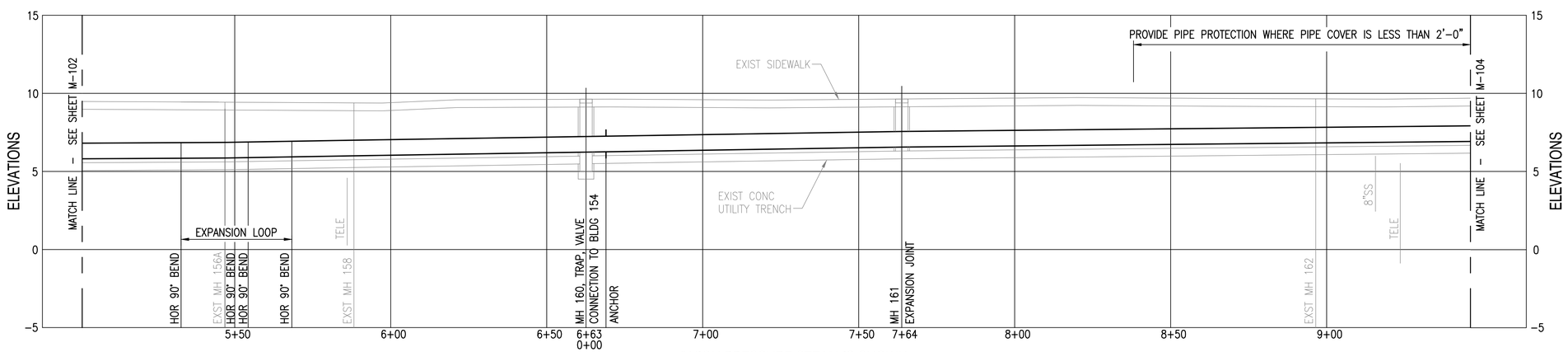

4" HIGH PRESSURE STEAM IS SHOWN,
3" CONDENSATE RUN IN PARALLEL

PROFILE

SCALE: HOR - 1"=20', VERT - 1"=4'

KEY PLAN

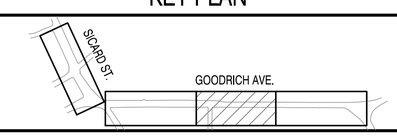

GRAPHIC SCALE

0 10' 20' 40'

SCALE:1"=20'

APPR	DATE	DESCRIPTION	SYM

NAVFAC

COMMONWEALTH OF MASSACHUSETTS
MICHAEL W. TRAVERS
MECHANICAL
No. 48711
REGISTERED PROFESSIONAL ENGINEER
SEAL

ENGINEERS
FST
Since 1914
FAY, SPOFFORD & THORNDIKE
5 BURLINGTON WOODS
BURLINGTON, MA 01803
A/E INFO

APPROVED
FOR COMMANDER NAVFAC
ACTIVITY
SATISFACTORY TO DATE
DES YK DRW YK CHK MWT
PWD-ME DM/POC L. MAHAR
BRANCH MANAGER
CHIEF ENG/ARCH
FIRE PROTECTION

DEPARTMENT OF THE NAVY
NAVAL FACILITIES ENGINEERING COMMAND
PUBLIC WORKS DEPARTMENT - MAINE
NAVAL FACILITIES ENGINEERING COMMAND - MID-ATLANTIC
NAVAL SHIPYARD - PORTSMOUTH, NH
PORTSMOUTH NAVAL SHIPYARD
KITTERY, MAINE
REPLACE STEAM & CONDENSATE
GOODRICH AVENUE & SICARD STREET
GOODRICH AVENUE - SHEET 2 OF 3

MAXIMO No.: 7725970
EPROJECT NO.: 1331743
CONSTR. CONTR. NO.
NAVFAC DRAWING NO. 12679271
SHEET 21 OF 29
M-103 MS-14-1233

DRAWFORM REVISION: 10 MARCH 2009

FILE NAME: U:\bq-207aa - steam\CADD\Roadways\04_Mechanical\BQ-207AA-M-101-05.dwg LAYOUT NAME: M-103 PLOTTED: Wednesday, August 06, 2014 - 12:20pm USER: Worsek_V

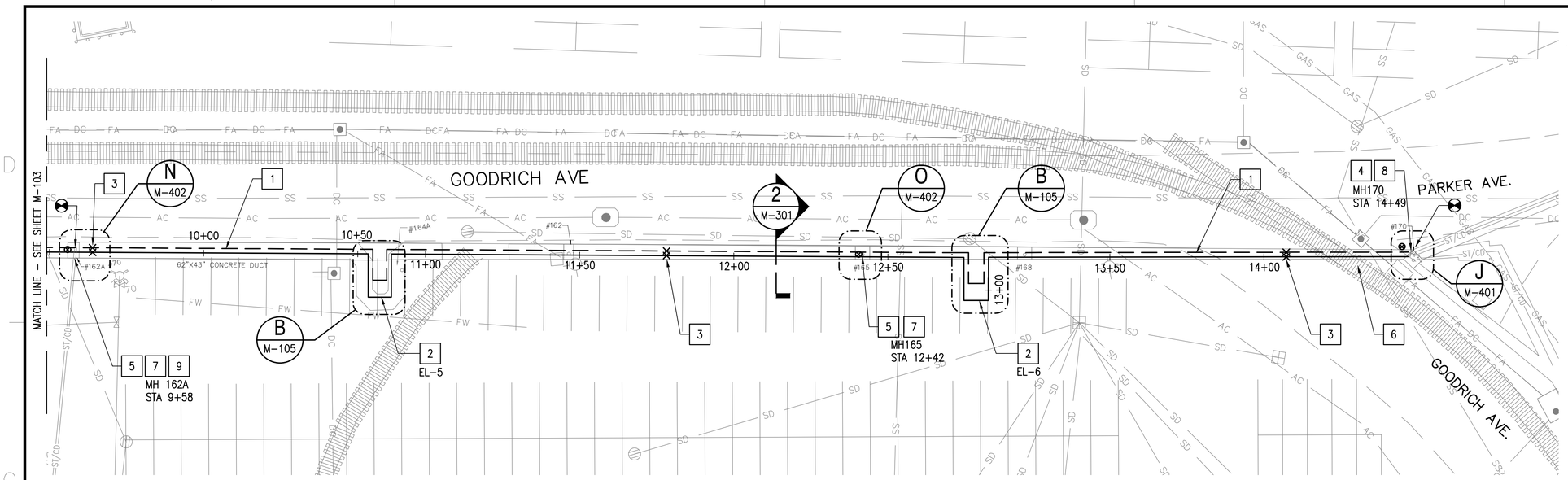

GOODRICH AVENUE

SCALE: 1"=20'

PLAN NORTH

KEY NOTES:

1. PROVIDE 4" HPS AND 3" CR PIPES, PRE-ENGINEERED, DIRECT BURIED. FOLLOW EXISTING TRENCH PATH.
2. PROVIDE EXPANSION LOOPS. DEMOLISH AND MODIFY EXISTING TRENCH WALLS AS REQUIRED TO ACCOMMODATE LOOPS. FOR DETAILS SEE DRAWING NO. M-105.
3. PROVIDE CONCRETE ANCHORS ON HPS AND CR. SEE ANCHOR DETAIL ON DRAWING NO. M-501.
4. CONNECT TO EXISTING 4" HPS AND 3" CR. PROVIDE IN-LINE BUTTERFLY VALVES, INSULATE WITH REMOVABLE JACKET.
5. PROVIDE CONDENSATE TRAP IN MANHOLE. SEE TRAP ASSEMBLY DETAIL ON DRAWING NO. M-502.
6. RAIL ROAD TRACKS CROSSING UTILITY TRENCH. CONDITIONS SHALL BE VIF.
7. RECONSTRUCTED MANHOLE. FOR DETAILS SEE DRAWING NO. C-501, MANHOLE PLAN AND SECTION 6.
8. PROVIDE NEW VALVES AND TRAP IN EXISTING MANHOLE. SEE TRAP ASSEMBLY DETAIL ON DRAWING NO. M-502.
9. CONNECT TO EXISTING 1-1/2" HPS AND 1" CR SERVICE PIPE TO BUILDING 168.

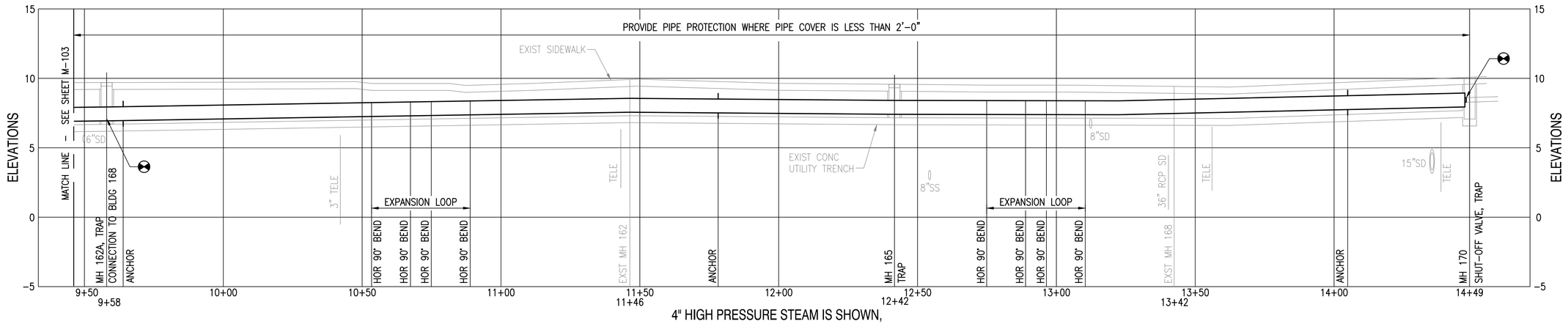

4" HIGH PRESSURE STEAM IS SHOWN,
3" CONDENSATE RUN IN PARALLEL

PROFILE

SCALE: HOR – 1"=20', VERT – 1"=4'

KEY PLAN

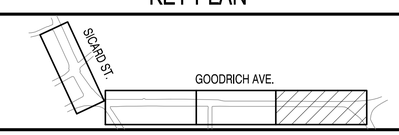

GRAPHIC SCALE

0 10' 20' 40'

SCALE:1"=20'

APPR	
DATE	
DESCRIPTION	
SYM	

NAVFAC

COMMONWEALTH OF MASSACHUSETTS
MICHAEL W. TRAVERS
MECHANICAL
No. 48711
REGISTERED PROFESSIONAL ENGINEER

SEAL

ENGINEERS
FST
Since 1914
FAY, SPOFFORD & THORNDIKE
5 BURLINGTON WOODS
BURLINGTON, MA 01803
A/E INFO

APPROVED
FOR COMMANDER NAVFAC
ACTIVITY
SATISFACTORY TO DATE
DES YK DRW YK CHK MWT
PWD-ME DM/POC L. MAHAR
BRANCH MANAGER
CHIEF ENG/ARCH
FIRE PROTECTION

DEPARTMENT OF THE NAVY
NAVAL FACILITIES ENGINEERING COMMAND ~ MID-ATLANTIC
PUBLIC WORKS DEPARTMENT – MAINE
NAVAL FACILITIES ENGINEERING COMMAND
NAVAL SHIPYARD – PORTSMOUTH, NH
PORTSMOUTH NAVAL SHIPYARD
KITTERY, MAINE
REPLACE STEAM & CONDENSATE
GOODRICH AVENUE & SICARD STREET
GOODRICH AVENUE – SHEET 3 OF 3

MAXIMO No.: 7725970
EPROJECT NO.: 1331743
CONSTR. CONTR. NO.
NAVFAC DRAWING NO. 12679272
SHEET 22 OF 29
M-104 MS-14-1234

DRAWFORM REVISION: 10 MARCH 2009

FILE NAME: U:\bq-207aa – steam\CADD\Roadways\04_Mechanical\BQ-207AA-M-101-05.dwg LAYOUT NAME: M-104 PLOTTED: Wednesday, August 06, 2014 – 12:19pm USER: Wronsk_V

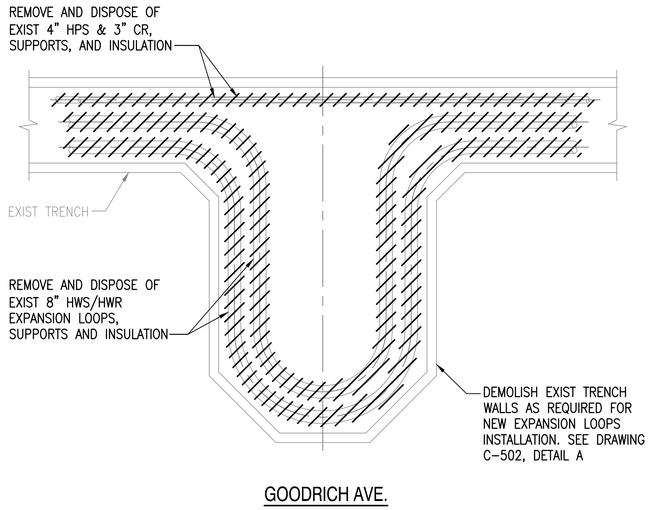

TYPICAL EXPANSION LOOPS - DEMOLITION (A)

SCALE: 1/4" = 1'-0" MD102,MD103

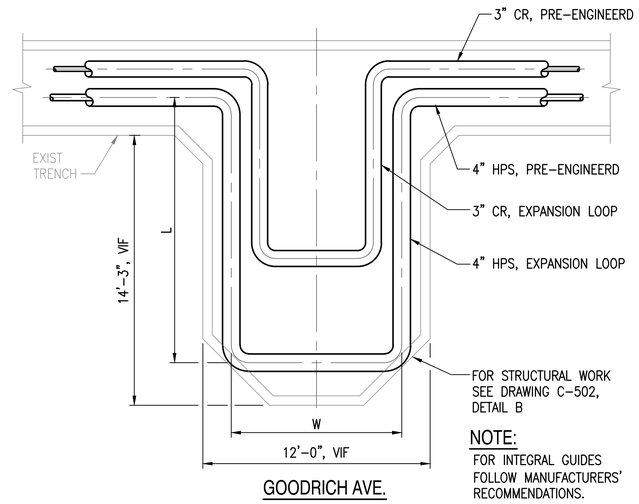

NOTE:
FOR INTEGRAL GUIDES FOLLOW MANUFACTURERS' RECOMMENDATIONS.

TYPICAL EXPANSION LOOPS (B)

SCALE: 1/4" = 1'-0" M-102,M-104

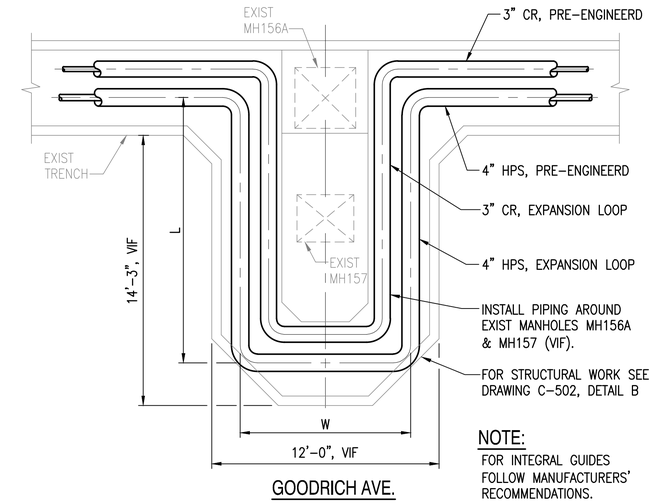

NOTE:
FOR INTEGRAL GUIDES FOLLOW MANUFACTURERS' RECOMMENDATIONS.

EXPANSION LOOPS EL-4 PLAN (C)

SCALE: 1/4" = 1'-0" M-103

EXPANSION LOOPS SCHEDULE

FLUID	MARK	EL-1	EL-2	EL-3	EL-4	EL-5	EL-6
	STREET	SICARD ST	GOODRICH AVE	GOODRICH AVE	GOODRICH AVE	GOODRICH AVE	GOODRICH AVE
		NEW LOCATION	EXIST LOCATION	NEW LOCATION	EXIST LOCATION	EXIST LOCATION	NEW LOCATION
HPS	PIPE SIZE	2-1/2"	4"	4"	4"	4"	4"
	LENGTH (L)	14'-0"	10'-0"	17'-0"	14'-0"	14'-0"	14'-0"
	WIDTH (W)	9'-0"	6'-0"	9'-0"	9'-0"	8'-0"	8'-0"
CR	PIPE SIZE	1-1/2"	3"	3"	3"	3"	3"
	LENGTH (L)	14'-0"	6'-0"	12'-0"	14'-0"	10'-0"	10'-0"
	WIDTH (W)	6'-0"	3'-0"	6'-0"	6'-0"	5'-0"	5'-0"
CA	PIPE SIZE	1-1/4"	–	–	–	–	–
	LENGTH (L)	14'-0"	–	–	–	–	–
	WIDTH (W)	7'-6"	–	–	–	–	–

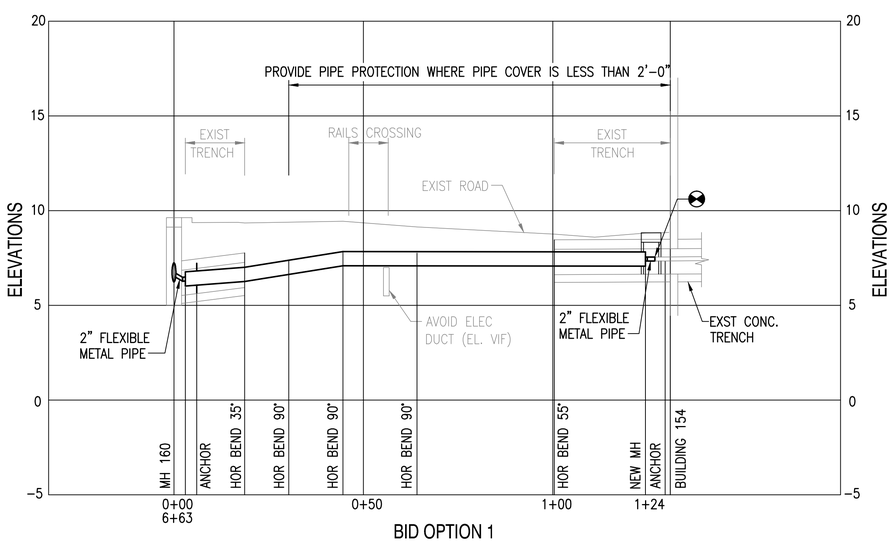

BID OPTION 1

2" HIGH PRESSURE STEAM IS SHOWN,
1-1/2" CONDENSATE RUN IN PARALLEL

PROFILE - SERVICE TO BUILDING 154

SCALE: HOR – 1"=20', VERT – 1"=4'

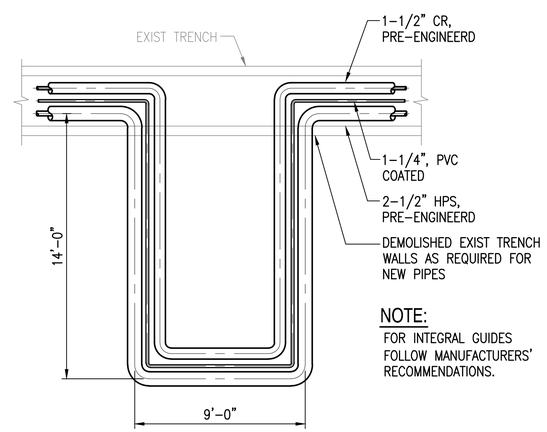

NOTE:
FOR INTEGRAL GUIDES FOLLOW MANUFACTURERS' RECOMMENDATIONS.

SICARD ST. - BID OPTION 2

EXPANSION LOOPS EL-1 PLAN (D)

SCALE: 1/4" = 1'-0" M-101

GRAPHIC SCALE

0 10' 20' 40' SCALE:1"=20'

0 2' 4' 8' SCALE:1/4"=1'

SYM	DESCRIPTION	DATE	APPR

NAVFAC

COMMONWEALTH OF MASSACHUSETTS MICHAEL W. TRAVERS MECHANICAL No. 48711 REGISTERED PROFESSIONAL ENGINEER

SEAL

ENGINEERS FST Since 1914
FAY, SPOFFORD & THORNDIKE
5 BURLINGTON WOODS
BURLINGTON, MA 01803
A/E INFO

APPROVED
FOR COMMANDER NAVFAC
ACTIVITY
SATISFACTORY TO DATE
DES YK DRW YK CHK MWT
PWD-ME DM/POC L. MAHAR
BRANCH MANAGER
CHIEF ENG/ARCH
FIRE PROTECTION

DEPARTMENT OF THE NAVY
NAVAL FACILITIES ENGINEERING COMMAND
PUBLIC WORKS DEPARTMENT – MAINE
PORTSMOUTH NAVAL SHIPYARD

NAVAL FACILITIES ENGINEERING COMMAND ~ MID-ATLANTIC
NAVAL SHIPYARD – PORTSMOUTH, NH
KITTERY, MAINE

REPLACE STEAM & CONDENSATE
GOODRICH AVENUE & SICARD STREET

SERVICE PROFILES AND DETAILS

MAXIMO No.: 7725970
EPROJECT NO.: 1331743
CONSTR. CONTR. NO.
NAVFAC DRAWING NO. 12679273
SHEET 23 OF 29
M-105 MS-14-1235

DRAWFORM REVISION: 10 MARCH 2009

FILE NAME: U:\bq-207aa – steam\CADD\Roadways\04_Mechanical\BQ-207AA-M-101-05.dwg LAYOUT NAME: M-105 PLOTTED: Wednesday, August 06, 2014 – 12:18pm USER: Wcrosk_V

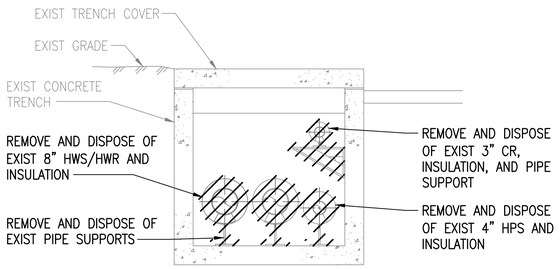

GOODRICH AVE TRENCH SECTION - DEMOLITION (1)

SCALE: 1/2" = 1'-0" MD102, MD103

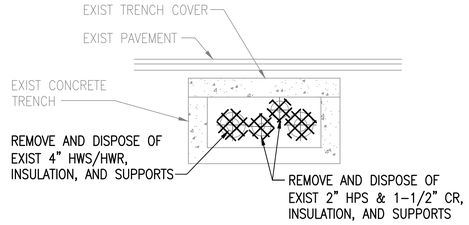

BID OPTION 1

SERVICE TO BUILDING 154 TRENCH SECTION - DEMOLITION (3)

SCALE: 1/2" = 1'-0" MD102

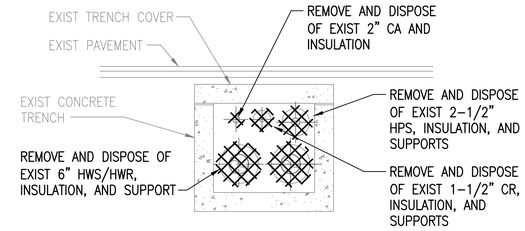

BID OPTION 2

SICARD ST TRENCH SECTION - DEMOLITION (5)

SCALE: 1/2" = 1'-0" MD101

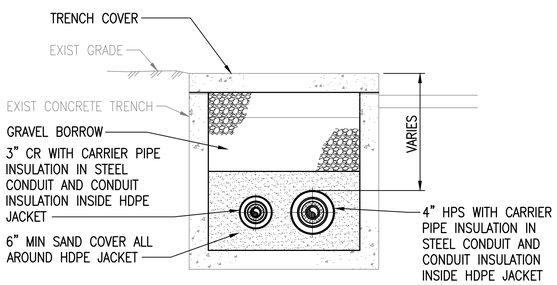

GOODRICH AVE TRENCH SECTION (2)

SCALE: 1/2" = 1'-0" M-102, M-103, M-104

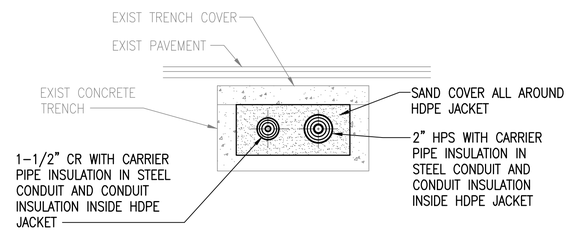

BID OPTION 1

SERVICE TO BUILDING 154 TRENCH SECTION (4)

SCALE: 1/2" = 1'-0" M-103

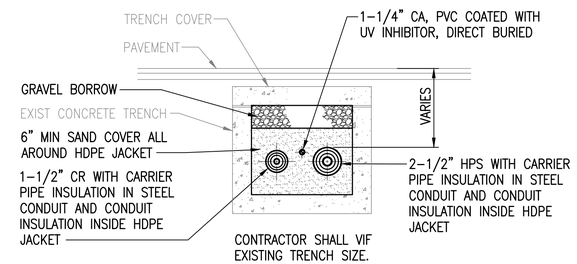

BID OPTION 2

SICARD ST TRENCH SECTION (6)

SCALE: 1/2" = 1'-0" M-101

GRAPHIC SCALE

0 1' 2' 4'

SCALE:1/2"=1'-0"

SYM	DESCRIPTION	DATE	APPR

NAVFAC

COMMONWEALTH OF MASSACHUSETTS MICHAEL W. TRAVERS MECHANICAL No. 48711 REGISTERED PROFESSIONAL ENGINEER

SEAL

ENGINEERS FST Since 1914

FAY, SPOFFORD & THORNDIKE
5 BURLINGTON WOODS
BURLINGTON, MA 01803

A/E INFO

APPROVED

FOR COMMANDER NAVFAC

ACTIVITY

SATISFACTORY TO DATE

DES YK DRW YK CHK MWT

PWD-ME DM/POC L. MAHAR

BRANCH MANAGER

CHIEF ENG/ARCH

FIRE PROTECTION

DEPARTMENT OF THE NAVY
NAVAL FACILITIES ENGINEERING COMMAND
PUBLIC WORKS DEPARTMENT - MAINE
NAVAL FACILITIES ENGINEERING COMMAND ~ MID-ATLANTIC
NAVAL SHIPYARD - PORTSMOUTH, NH
PORTSMOUTH NAVAL SHIPYARD
KITTERY, MAINE

REPLACE STEAM & CONDENSATE
GOODRICH AVENUE & SICARD STREET

TRENCH SECTIONS

MAXIMO No.: 7725970

EPROJECT NO.: 1331743

CONSTR. CONTR. NO.

NAVFAC DRAWING NO. 12679274

SHEET 24 OF 29

M-301 MS-14-1236

DRAWFORM REVISION: 10 MARCH 2009

FILE NAME: U:\bq-2070a - steam\CADD\Roadways\04_Mechanical\BQ-2070A-M-301.dwg LAYOUT NAME: M-301 PLOTTED: Wednesday, August 06, 2014 - 12:17pm USER: Wronsk_V

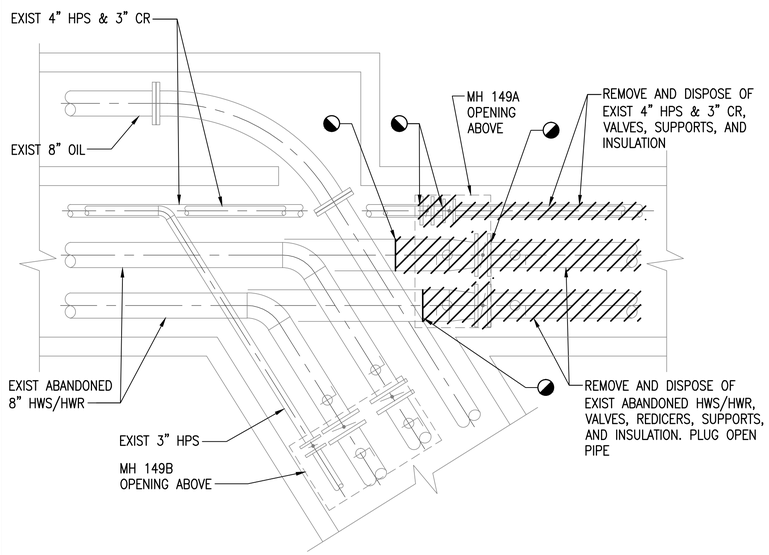

EXISTING MANHOLE 149A PLAN - DEMOLITION (E)

SCALE: 1/2" = 1'-0" MD102

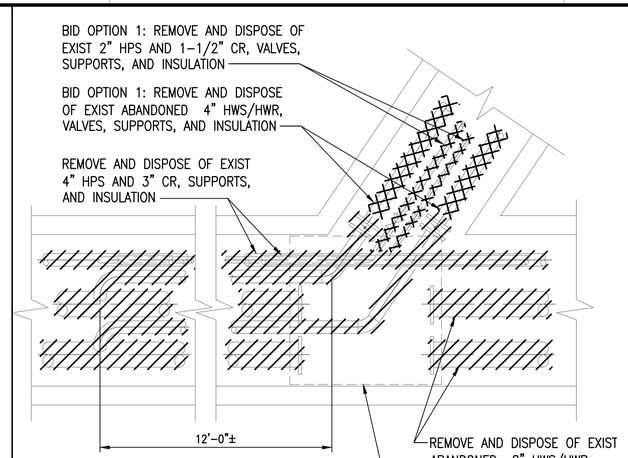

NOTES:

1. IF OPTION 1 IS NOT AWARDED, REMAIN EXISTING HPS AND CR SERVICE PIPES TO BUILDING 154.
2. REMOVE 4" HWS/HWR INSIDE MAIN TRENCH. PLUG ENDS IN SERVICE TRENCH.

EXISTING MANHOLE 160 PLAN - DEMOLITION (G)

SCALE: 1/2" = 1'-0" MD102

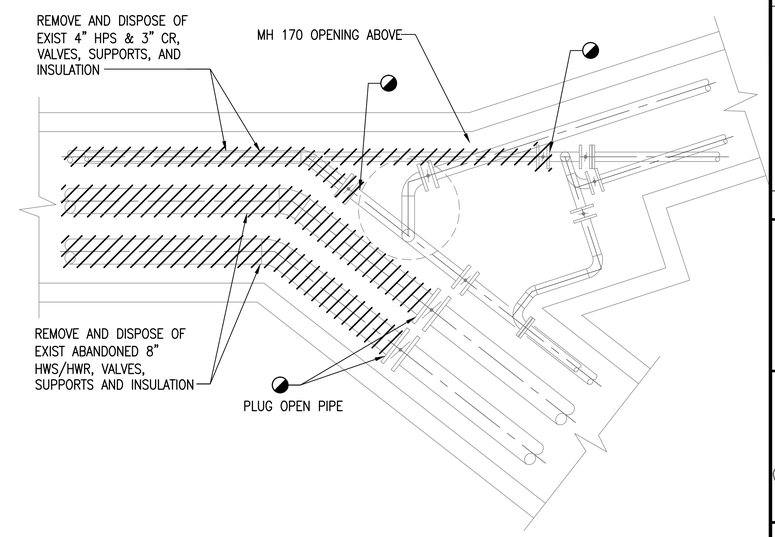

EXISTING MANHOLE 170 PLAN - DEMOLITION (I)

SCALE: 1/2" = 1'-0" MD103

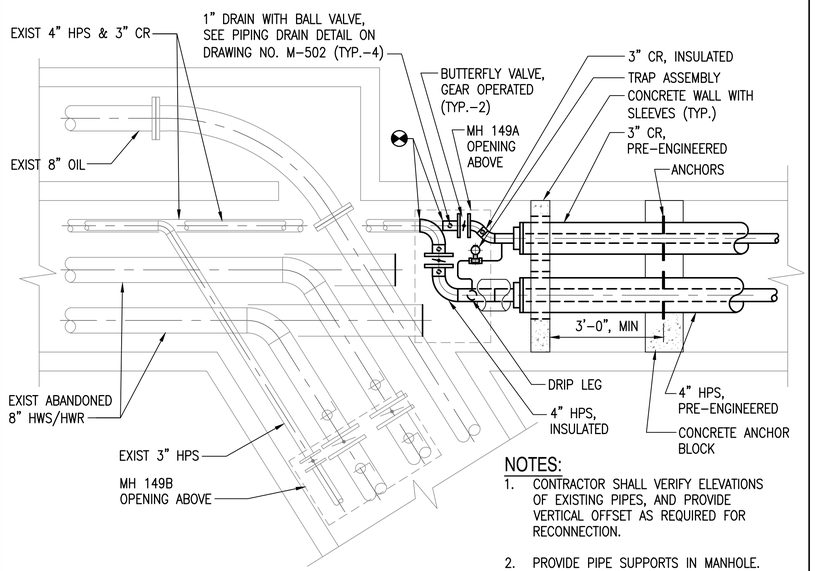

NOTES:

1. CONTRACTOR SHALL VERIFY ELEVATIONS OF EXISTING PIPES, AND PROVIDE VERTICAL OFFSET AS REQUIRED FOR RECONNECTION.
2. PROVIDE PIPE SUPPORTS IN MANHOLE. ALL SUPPORTS SHALL BE HOT DIPPED GALVANIZED.

MANHOLE 149A PLAN (F)

SCALE: 1/2" = 1'-0" M-102

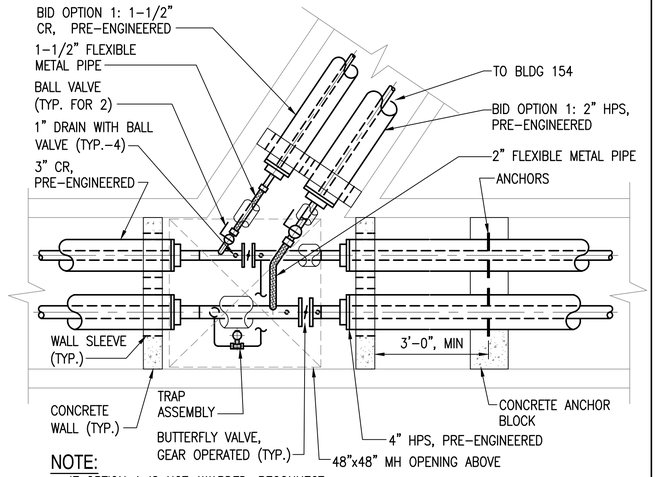

NOTE:

IF OPTION 1 IS NOT AWARDED, RECONNECT EXISTING HPS AND CR SERVICE PIPES TO NEW MAINS WITH FLEXIBLE METAL PIPES AND NEW BALL VALVES.

MANHOLE 160 PLAN (H)

SCALE: 1/2" = 1'-0" M-103

NOTES:

1. FOR CONCRETE WALL DETAILS, SEE DRAWING NO. C-501, MANHOLE PLAN AND SECTION 6.
2. INSULATE ALL STEAM AND CONDENSATE PIPING AND VALVES IN MANHOLES AS REQUIRED PER SPECIFICATIONS.

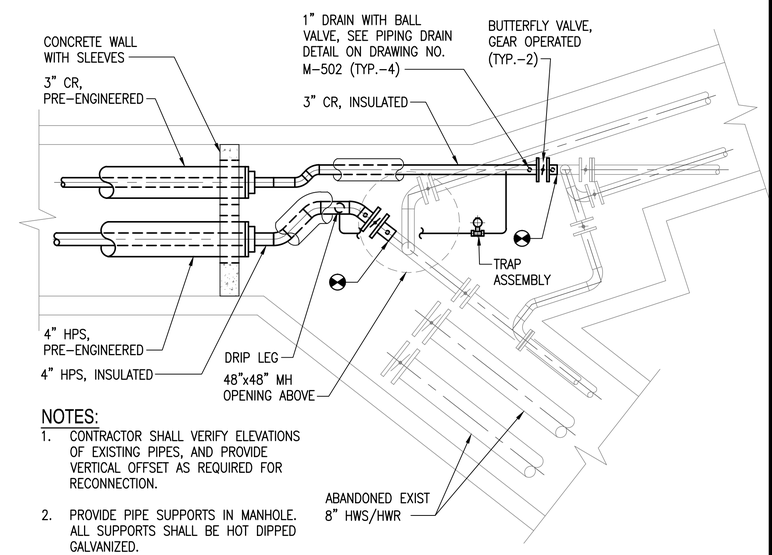

NOTES:

1. CONTRACTOR SHALL VERIFY ELEVATIONS OF EXISTING PIPES, AND PROVIDE VERTICAL OFFSET AS REQUIRED FOR RECONNECTION.
2. PROVIDE PIPE SUPPORTS IN MANHOLE. ALL SUPPORTS SHALL BE HOT DIPPED GALVANIZED.

MANHOLE 170 PLAN (J)

SCALE: 1/2" = 1'-0" M-104

GRAPHIC SCALE

0 1' 2' 4'

SCALE:1/2"=1'-0"

SYM	DESCRIPTION	DATE	APPR

NAVFAC

COMMONWEALTH OF MASSACHUSETTS — MICHAEL W. TRAVERS — MECHANICAL — No. 48711 — REGISTERED PROFESSIONAL ENGINEER

SEAL

ENGINEERS FST Since 1914

FAY, SPOFFORD & THORNDIKE
5 BURLINGTON WOODS
BURLINGTON, MA 01803

A/E INFO

APPROVED

FOR COMMANDER NAVFAC

ACTIVITY

SATISFACTORY TO DATE

DES YK | DRW YK | CHK MWT

PWD-ME DM/POC L. MAHAR

BRANCH MANAGER

CHIEF ENG/ARCH

FIRE PROTECTION

DEPARTMENT OF THE NAVY
NAVAL FACILITIES ENGINEERING COMMAND
PUBLIC WORKS DEPARTMENT - MAINE
PORTSMOUTH NAVAL SHIPYARD

NAVAL FACILITIES ENGINEERING COMMAND ~ MID-ATLANTIC
NAVAL SHIPYARD - PORTSMOUTH, NH
KITTERY, MAINE

REPLACE STEAM & CONDENSATE
GOODRICH AVENUE & SICARD STREET
MANHOLE PART PLANS - SHEET 1 OF 2

MAXIMO No.: 7725970

EPROJECT NO.: 1331743

CONSTR. CONTR. NO.

NAVFAC DRAWING NO. 12679275

SHEET 25 OF 29

M-401 | MS-14-1237

DRAWFORM REVISION: 10 MARCH 2009

FILE NAME: U:\bq-207aa - steam\CADD\Roadways\04_Mechanical\BQ-207AA-M-401-03.dwg LAYOUT NAME: M-401 PLOTTED: Wednesday, August 06, 2014 - 12:13pm USER: Wronsk_V

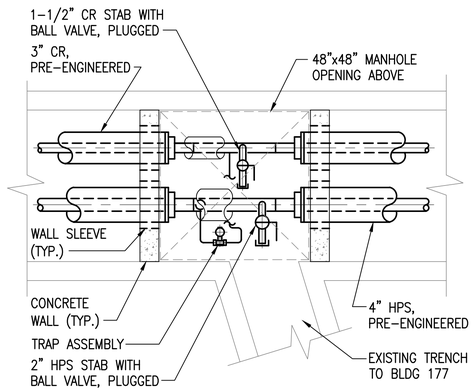

MANHOLE 155 PLAN (K)

SCALE: 1/2" = 1'-0" M-102

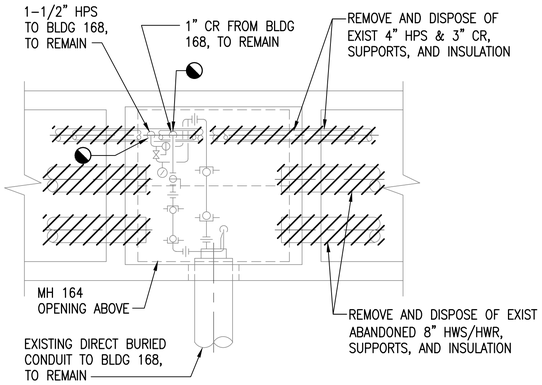

EXISTING MANHOLE PLAN - DEMOLITION (M)

SCALE: 1/2" = 1'-0" MD103

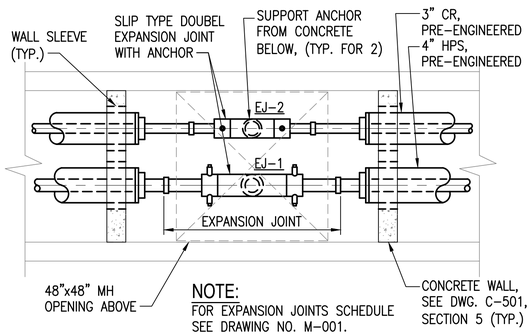

NOTE:
FOR EXPANSION JOINTS SCHEDULE SEE DRAWING NO. M-001.

MANHOLE 161 PLAN (L)

SCALE: 1/2" = 1'-0" M-103

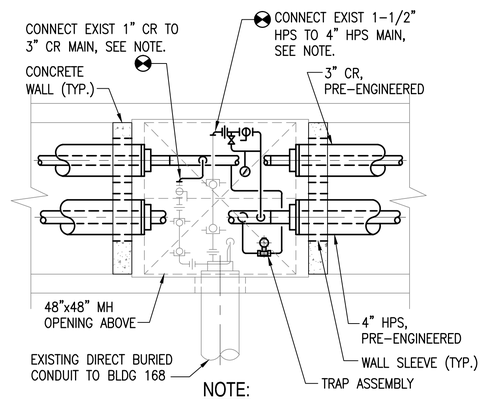

NOTE:
1. MODIFY EXIST 1-1/2" HPS AND 1" CR PIPING AS REQUIRED FOR RECONNECTION. REUSE ALL EXSIT VALVES AND APPURTENANCES.

MANHOLE 162A PLAN (N)

SCALE: 1/2" = 1'-0" M-104

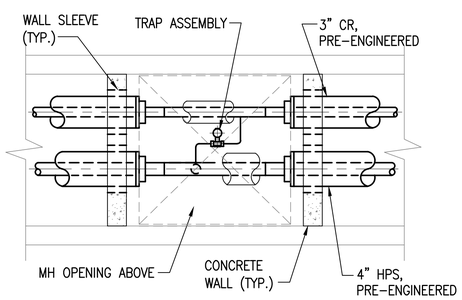

MANHOLE 165 PLAN (O)

SCALE: 1/2" = 1'-0" M-104

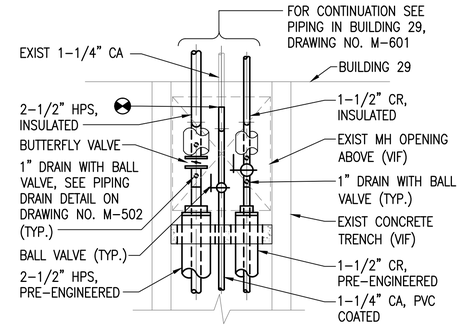

BID OPTION 2

MANHOLE 290 PLAN (P)

SCALE: 1/2" = 1'-0" M-101

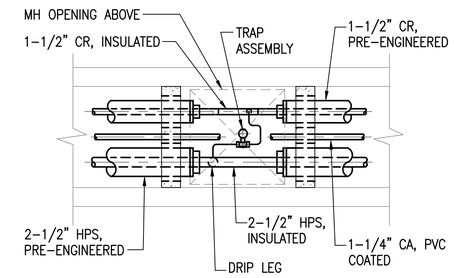

BID OPTION 2

MANHOLE 288A PLAN (Q)

SCALE: 1/2" = 1'-0" M-101

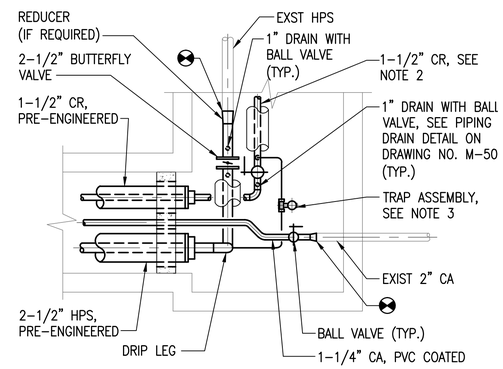

← SICARD ST.

NOTES:
1. MANHOLE SIZE AND CONFIGURATION SHALL BE VERIFIED ON FIELD.
2. EXISTING CONDENSATE PIPE IS NOT VISIBLE IN MANHOLE. CONNECT TO EXISTING, VIF EXIST CR LOCATION. PROVIDE REDUCER IF REQUIRED.
3. PROVIDE CONDENSATE DRIP LEG AND TRAP ASSEMBLY. CONNECT TO CONDENSATE RETURN.

BID OPTION 2

MANHOLE 147 PLAN (R)

SCALE: 1/2" = 1'-0" M-101

NOTES:
1. FOR CONCRETE WALL DETAILS, SEE DRAWING NO. C-501, MANHOLE PLAN AND SECTION 6.
2. INSULATE ALL STEAM AND CONDENSATE PIPING AND VALVES IN MANHOLES AS REQUIRED PER SPECIFICATIONS.

GRAPHIC SCALE

0 1' 2' 4'

SCALE:1/2"=1'-0"

SYM	DESCRIPTION	DATE	APPR

NAVFAC

COMMONWEALTH OF MASSACHUSETTS MICHAEL W. TRAVERS MECHANICAL No. 48711 REGISTERED PROFESSIONAL ENGINEER

SEAL

ENGINEERS FST Since 1914
FAY, SPOFFORD & THORNDIKE
5 BURLINGTON WOODS BURLINGTON, MA 01803
A/E INFO

APPROVED
FOR COMMANDER NAVFAC
ACTIVITY
SATISFACTORY TO DATE
DES YK DRW YK CHK MWT
PWD-ME DM/POC L. MAHAR
BRANCH MANAGER
CHIEF ENG/ARCH
FIRE PROTECTION

DEPARTMENT OF THE NAVY
NAVAL FACILITIES ENGINEERING COMMAND
PUBLIC WORKS DEPARTMENT - MAINE
NAVAL FACILITIES ENGINEERING COMMAND - MID-ATLANTIC
NAVAL SHIPYARD - PORTSMOUTH, NH
PORTSMOUTH NAVAL SHIPYARD
KITTERY, MAINE
REPLACE STEAM & CONDENSATE
GOODRICH AVENUE & SICARD STREET
MANHOLE PART PLANS - SHEET 2 OF 2

MAXIMO No.: 7725970
EPROJECT NO.: 1331743
CONSTR. CONTR. NO.
NAVFAC DRAWING NO. 12679276
SHEET 26 OF 29
M-402 MS-14-1238

DRAWFORM REVISION: 10 MARCH 2009

FILE NAME: U:\bq-207aa - steam\CADD\Roadways\04_Mechanical\BQ-207AA-M-401-03.dwg LAYOUT NAME: M-402 PLOTTED: Wednesday, August 06, 2014 - 12:12pm USER: Wronsk_V

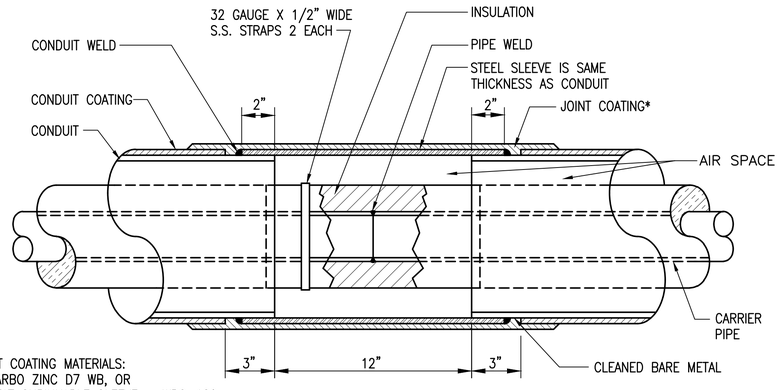

* JOINT COATING MATERIALS:
1. CARBO ZINC D7 WB, OR
2. HEAT SHRINKABLE SLEEVE – WPC–120.
3. HDPE SLEEVE, 40" LG. MIN. 175 MIL FOR 10" OR LARGER 150 MIL FOR 8"

NOTE:

CUT SHIPPING BARS BETWEEN CARRIER PIPE AND CONDUIT BEFORE MAKING JOINT OR COLD SPRINGING.

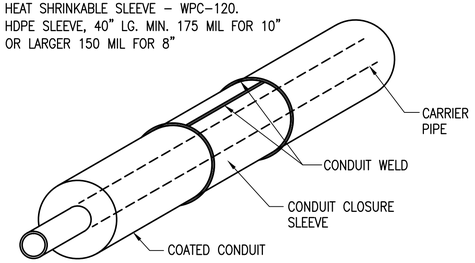

CONDUIT CLOSURE DETAIL

SCALE: NOT TO SCALE

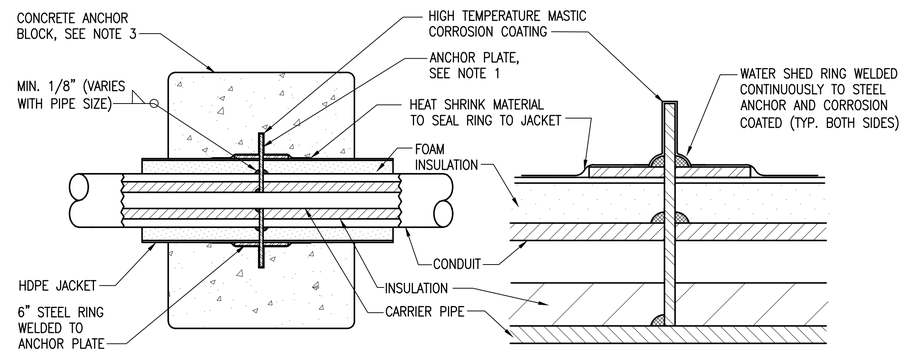

NOTES:

1. ANCHOR PLATES ARE 1/2" STEEL CENTERED ON CONDUIT WITH DIMENSIONS 1–1/2" LARGER HORIZONTALLY AND 1–1/2" LARGER VERTICALLY THAN NOMINAL HDPE JACKET DIAMETER, MINIMUM.
2. ANCHOR PLATES AND CONCRETE ANCHOR BLOCKS SHALL BE PER DIRECT BURIED PIPE MANUFACTURERS RECOMMENDATIONS.
3. PROVIDE REINFORCEMENT IN ANCHOR CONCRETE BLOCKS AT TOP AND BOTTOM, BOTH DIRECTIONS. FOR DETAIL SEE DRAWING NO. C–501, SECTION 6.

DIRECT BURIED PIPE ANCHOR DETAIL

SCALE: NOT TO SCALE

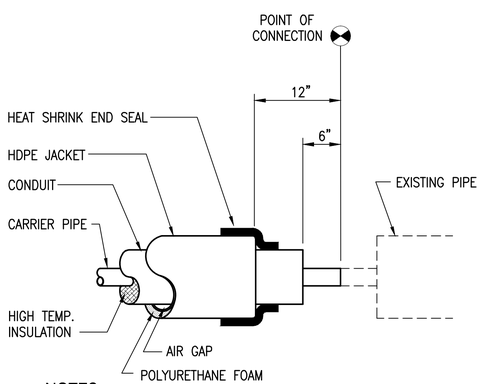

NOTES:

1. CONTRACTOR SHALL SUPPLY SIZE AND TYPE OF EXISTING PIPING WHICH PRE–ENGINEERED PIPE SHALL CONNECT TO, IN ORDER THAT AN APPROPRIATE ADAPTER CAN BE MADE.
2. PROVIDE INSULATION AND JACKETING AROUND JOINT. INSULATION THICKNESS SHALL MATCH EXIST INSULATION, OR O.D. OF THE PRE–ENGINEERED PIPE.

PIPE CONNECTION TO EXISTING DETAIL

SCALE: NOT TO SCALE

SYM	DESCRIPTION	DATE	APPR

NAVFAC

COMMONWEALTH OF MASSACHUSETTS
MICHAEL W. TRAVERS
MECHANICAL
No. 48711
REGISTERED PROFESSIONAL ENGINEER
SEAL

ENGINEERS
FST
Since 1914
FAY, SPOFFORD & THORNDIKE
5 BURLINGTON WOODS
BURLINGTON, MA 01803
A/E INFO

APPROVED
FOR COMMANDER NAVFAC
ACTIVITY
SATISFACTORY TO DATE

DES	YK	DRW	YK	CHK	MWT
PWD–ME DM/POC	L. MAHAR				
BRANCH MANAGER					
CHIEF ENG/ARCH					
FIRE PROTECTION					

DEPARTMENT OF THE NAVY
NAVAL FACILITIES ENGINEERING COMMAND
PUBLIC WORKS DEPARTMENT – MAINE
NAVAL FACILITIES ENGINEERING COMMAND ~ MID-ATLANTIC
NAVAL SHIPYARD – PORTSMOUTH, NH
PORTSMOUTH NAVAL SHIPYARD
KITTERY, MAINE
REPLACE STEAM & CONDENSATE
GOODRICH AVENUE & SICARD STREET
DETAILS – SHEET 1 OF 2

MAXIMO No.: 7725970
EPROJECT NO.: 1331743
CONSTR. CONTR. NO.
NAVFAC DRAWING NO.
12679277
SHEET 27 OF 29
M-501 | MS-14-1239

DRAWFORM REVISION: 10 MARCH 2009

FILE NAME: U:\bq-207qa – steam\CADD\Roadways\04_Mechanical\BQ-207AA-M-501-02.dwg LAYOUT NAME: M-501 PLOTTED: Wednesday, August 06, 2014 – 12:15pm USER: Wronsk_V

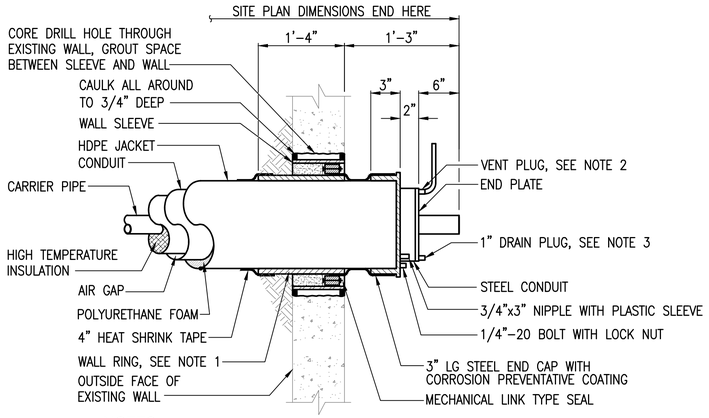

NOTES:

1. WALL RING WILL INCREASE OUTSIDE DIAMETER OF HDPE JACKET BY 1/2".
2. CONTRACTOR TO VENT TO ATMOSPHERE TO PREVENT CONDUIT FLOODING IN ACCORDANCE WITH CONTRACT DRAWINGS IN THE EVENT THE VAULT FLOODS. VENT MUST BE OPEN AND INSTALLED PRIOR TO STARTING SYSTEM.
3. DRAIN SHOULD BE OPENED DURING START-UP TO ALLOW CONDUIT TO DRAIN.

WALL PENETRATION DETAIL

SCALE: NOT TO SCALE

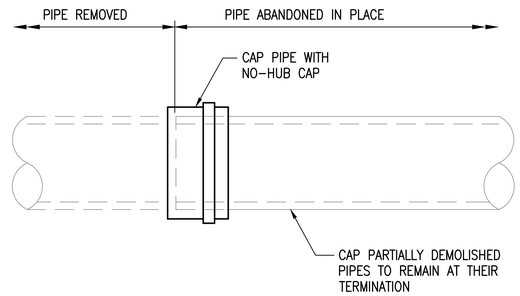

TYPICAL PIPE PLUGGING DETAIL

SCALE: NOT TO SCALE

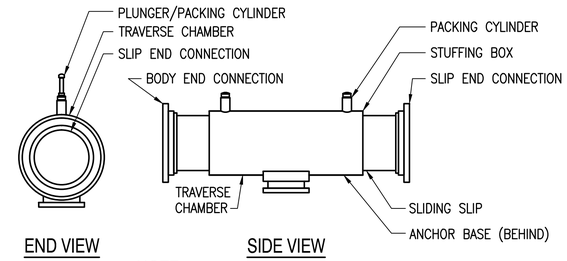

NOTE:

SEE EXPANSION JOINT SCHEDULES ON DRAWING NO. M-001. CONTRACTOR SHALL BE RESPONSIBLE FOR COORDINATING REQUIRED QUANTITIES.

EXPANSION JOINT DETAIL

SCALE: NOT TO SCALE

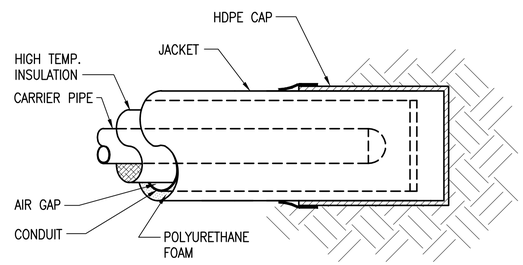

UNDERGROUND PIPE CAP DETAIL

SCALE: NOT TO SCALE

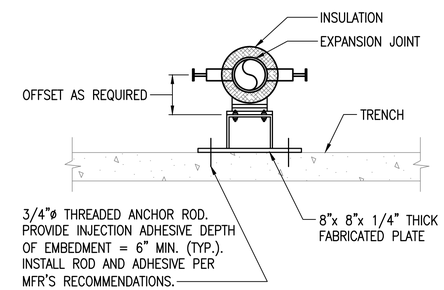

EXPANSION JOINT SUPPORT DETAIL

SCALE: NOT TO SCALE

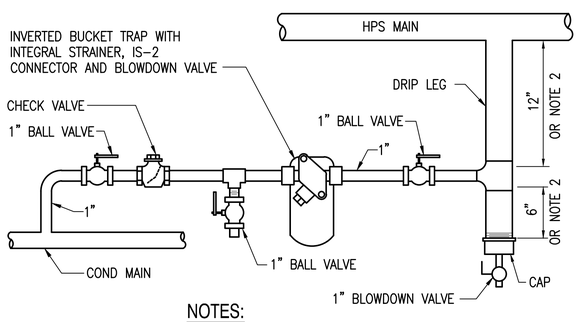

NOTES:

1. ALL PIPING AND FITTINGS SHALL BE SCHEDULE 80.
2. DRIP LEG DEPTH CAN VARY BASED ON MANHOLE DEPTH.

TRAP ASSEMBLY DETAIL

SCALE: NOT TO SCALE

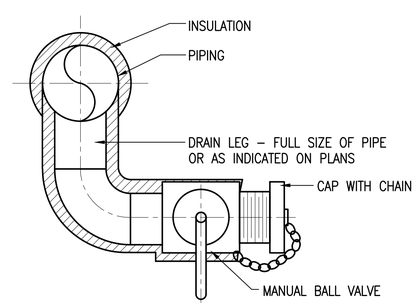

PIPING DRAIN DETAIL

SCALE: NOT TO SCALE

SYM	DESCRIPTION	DATE	APPR

NAVFAC

COMMONWEALTH OF MASSACHUSETTS MICHAEL W. TRAVERS MECHANICAL No. 48711 REGISTERED PROFESSIONAL ENGINEER

SEAL

ENGINEERS FST Since 1914
FAY, SPOFFORD & THORNDIKE
5 BURLINGTON WOODS
BURLINGTON, MA 01803
A/E INFO

APPROVED
FOR COMMANDER NAVFAC
ACTIVITY
SATISFACTORY TO DATE

DES YK | DRW YK | CHK MWT
PWD-ME DM/POC L. MAHAR
BRANCH MANAGER
CHIEF ENG/ARCH
FIRE PROTECTION

DEPARTMENT OF THE NAVY
NAVAL FACILITIES ENGINEERING COMMAND
NAVAL FACILITIES ENGINEERING COMMAND ~ MID-ATLANTIC
PUBLIC WORKS DEPARTMENT ~ MAINE
NAVAL SHIPYARD ~ PORTSMOUTH, NH
PORTSMOUTH NAVAL SHIPYARD
KITTERY, MAINE
REPLACE STEAM & CONDENSATE
GOODRICH AVENUE & SICARD STREET
DETAILS ~ SHEET 2 OF 2

MAXIMO No.: 7725970
EPROJECT NO.: 1331743
CONSTR. CONTR. NO.
NAVFAC DRAWING NO. 12679278
SHEET 28 OF 29
M-502 | MS-14-1240

DRAWFORM REVISION: 10 MARCH 2009

FILE NAME: U:\bq-207aa - steam\CADD\Roadways\04_Mechanical\BQ-207AA-M-501-02.dwg LAYOUT NAME: M-502 PLOTTED: Wednesday, August 06, 2014 - 12:14pm USER: Wcrosk_V

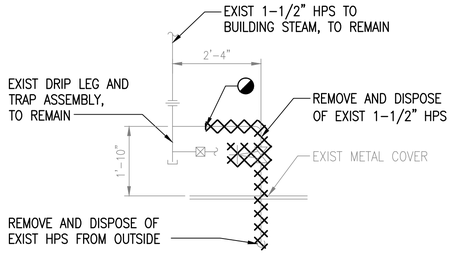

STEAM ELEVATION

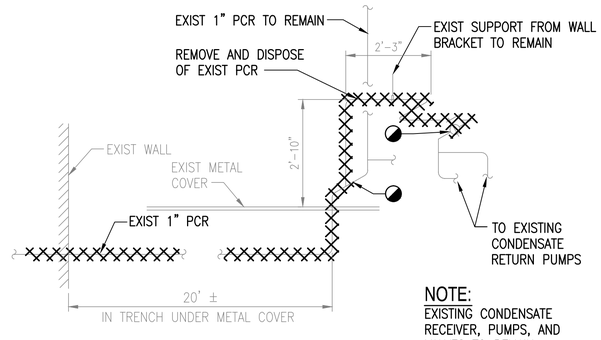

CONDENSATE ELEVATION

NOTE:
EXISTING CONDENSATE RECEIVER, PUMPS, AND VALVES TO REMAIN.

BID OPTION 2

PIPING IN BUILDING 29 - DEMOLITION (R)

SCALE: 1/2" = 1'-0" MD101

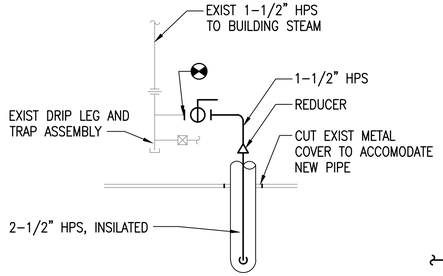

STEAM ELEVATION

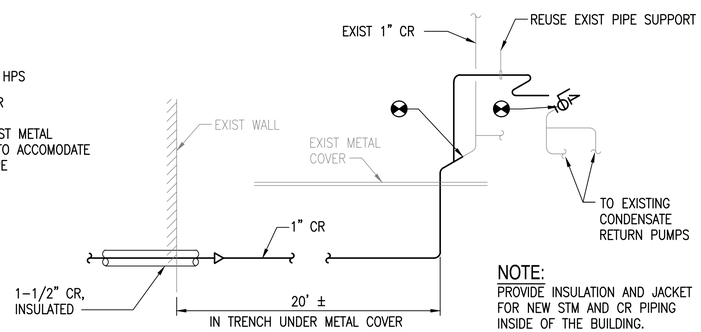

CONDENSATE ELEVATION

NOTE:
PROVIDE INSULATION AND JACKET FOR NEW STM AND CR PIPING INSIDE OF THE BUILDING.

BID OPTION 2

PIPING IN BUILDING 29 (S)

SCALE: 1/2" = 1'-0" M-101

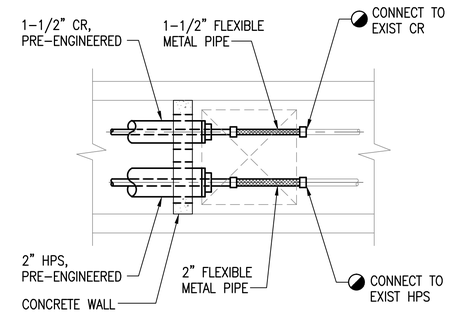

NOTE:
FOR CONCRETE WALL DETAILS, SEE DRAWING NO. C-501, MANHOLE PLAN AND SECTION 6.

BID OPTION 1

PIPING AT BUILDING 154 PLAN (T)

SCALE: 1/2" = 1'-0" M-103

GRAPHIC SCALE

0 1' 2' 4'

SCALE:1/2"=1'-0"

SYM	DESCRIPTION	DATE	APPR

NAVFAC

COMMONWEALTH OF MASSACHUSETTS
MICHAEL W. TRAVERS
MECHANICAL
No. 48711
REGISTERED PROFESSIONAL ENGINEER
SEAL

ENGINEERS
FST
Since 1914
FAY, SPOFFORD & THORNDIKE
5 BURLINGTON WOODS
BURLINGTON, MA 01803
A/E INFO

APPROVED
FOR COMMANDER NAVFAC
ACTIVITY
SATISFACTORY TO DATE
DES YK DRW YK CHK MWT
PWD-ME DM/POC L. MAHAR
BRANCH MANAGER
CHIEF ENG/ARCH
FIRE PROTECTION

DEPARTMENT OF THE NAVY
NAVAL FACILITIES ENGINEERING COMMAND
PUBLIC WORKS DEPARTMENT - MAINE
NAVAL FACILITIES ENGINEERING COMMAND ~ MID-ATLANTIC
NAVAL SHIPYARD - PORTSMOUTH, NH
PORTSMOUTH NAVAL SHIPYARD
KITTERY, MAINE
REPLACE STEAM & CONDENSATE
GOODRICH AVENUE & SICARD STREET
PIPING CONNECTIONS TO BUILDINGS - PLAN AND DIAGRAMS

MAXIMO No.: 7725970
EPROJECT NO.: 1331743
CONSTR. CONTR. NO.
NAVFAC DRAWING NO. 12679279
SHEET 29 OF 29
M-601 MS-14-1241

DRAWFORM REVISION: 10 MARCH 2009

FILE NAME: U:\bq-207aa - steam\CADD\Roadways\04_Mechanical\BQ-207AA-M-401-03.dwg LAYOUT NAME: M-601 PLOTTED: Wednesday, August 06, 2014 - 12:11pm USER: Wcrosk_V