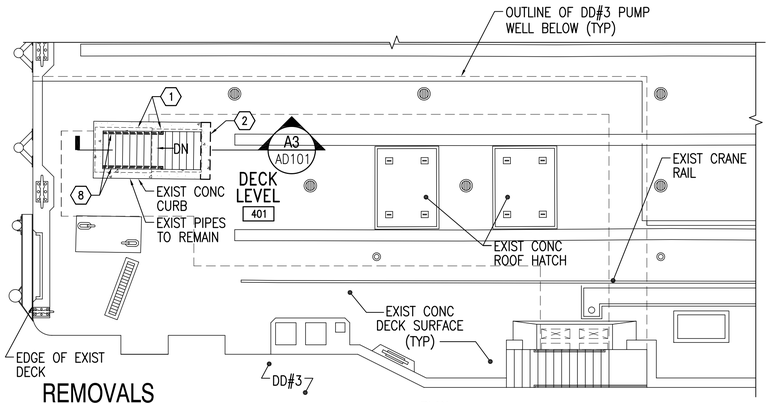

REMOVALS DECK LEVEL PLAN (ELEV 9.72'±)

SCALE: 1/8" = 1'-0"

PLAN NORTH CD101

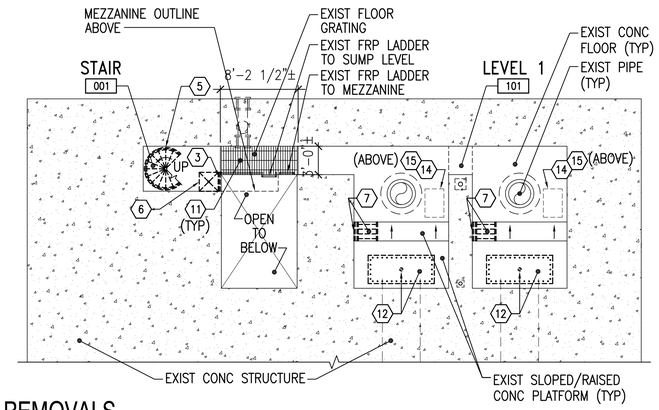

REMOVALS LEVEL 1 PLAN (ELEV -36.78'±)

SCALE: 1/8" = 1'-0"

PLAN NORTH

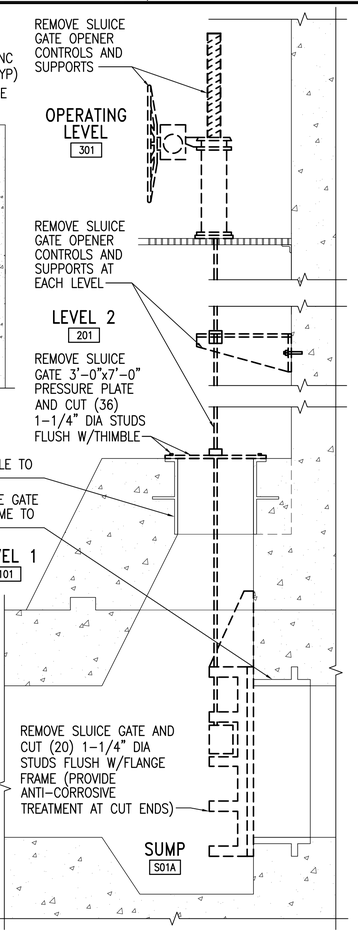

SLUICE GATE REMOVAL DETAIL

SCALE: 1/2"=1'-0"

AD101 B4

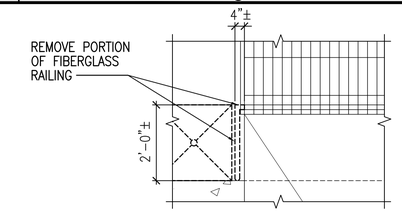

RAILING REMOVAL DETAIL

SCALE: 1/2"=1'-0"

AD101 D5

REMOVALS GENERAL NOTES

1. REFER TO SHEET G-003 FOR GENERAL CONSTRUCTION AND SEQUENCING NOTES.
2. REMOVE DEBRIS DAILY. COORDINATE WITH THE CONTRACTING OFFICER TO MINIMIZE DISRUPTION OF SHIPYARD ACTIVITIES.
3. FILL, PATCH, PAINT OR OTHERWISE REFINISH SURFACES DISTURBED BY DEMOLITION OR RELOCATIONS TO MATCH EXISTING UNDISTURBED ADJACENT SURFACES TO THE NEXT CHANGE IN PLANE.
4. COORDINATE REMOVALS WITH CIVIL, STRUCTURAL, FIRE PROTECTION, MECHANICAL, AND ELECTRICAL REMOVALS DRAWINGS.
5. PROVIDE FALL PROTECTION DURING SPIRAL STAIR REMOVAL.
6. SEE SHEET AE101 FOR ADDITIONAL OPTION 2 REMOVALS.
7. REMOVE DEBRIS FROM SUMP TUNNEL PRIOR TO AND AFTER COMPLETION OF SLUICE GATE WORK.
8. EXISTING PAINT IS LEAD CONTAINING UNLESS NOTED OTHERWISE.

REMOVALS KEYNOTES (THIS SHEET ONLY)

1. REMOVE PAINTED WOOD FRAMED BULKHEAD ENCLOSURE AND PAINTED METAL BULKHEAD DOOR. SEE DETAIL A3/AD101.
2. REMOVE PORTION OF CONCRETE CURB. SEE CIVIL DRAWINGS.
3. REMOVE SECTION OF FIBERGLASS GUARDRAIL. SEE DETAIL D5/AD101.
4. REMOVE PAINTED HOLLOW METAL DOOR AND HARDWARE. REPAIR PAINTED DOOR FRAME. SEE DOOR SCHEDULE ON SHEET AE601.
5. REMOVE PAINTED METAL SPIRAL STAIR IN ITS ENTIRETY INCLUDING LANDINGS, HANDRAIL AND SUPPORTS. PROVIDE TEMPORARY EGRESS DURING STAIR WORK; COORDINATE WITH CONTRACTING OFFICER.
6. REMOVE METAL SINK. SEE SHEET MD102.
7. REMOVE FIBERGLASS HANDRAIL, STRINGERS AND STAIR TREADS.
8. REMOVE PAINTED METAL HANDRAIL AND SUPPORTS.
9. REMOVE PAINTED METAL GUARDRAIL AND SUPPORTS.
10. RELOCATE DRY DOCK PUMP EQUIPMENT. COORDINATE LOCATION SEQUENCING WITH CONTRACTING OFFICER. COORDINATE WITH ELECTRICAL SEQUENCING SHEET E-001.
11. OPTION 2 – REMOVE FLOOR GRATING. PREPARE FRAME FOR FIBERGLASS GRATING.
12. REMOVE SLUICE GATE, PRESSURE PLATE AND CONTROLS. SEE DETAIL B4/AD101. WORK AREA IS A CONFINED SPACE. SEE DETAIL C4/AE501 FOR INFILL DETAIL. COORDINATE WORK WITH SEQUENCING NOTES ON SHEET G-003.
13. REMOVE ABANDONED PIPE, SEE SHEET MD102.
14. REMOVE 2'-0"x3'-6"x8'-0" HIGH STEEL ANGLE SUPPORT FRAME AT MECHANICAL EQUIPMENT INCLUDING ANCHORS INTO WALL/FLOOR.
15. REMOVE METAL SHEETING AND THREADED ROD SUPPORTS AT MECHANICAL EQUIPMENT.

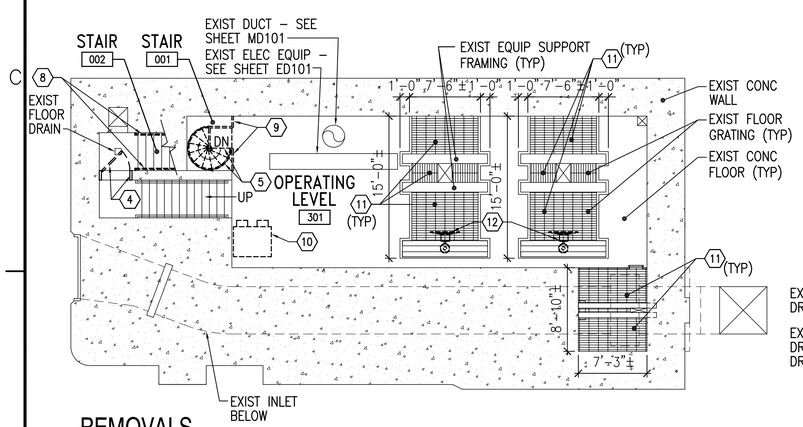

REMOVALS OPERATING LEVEL PLAN (ELEV -7.28'±)

SCALE: 1/8" = 1'-0"

PLAN NORTH

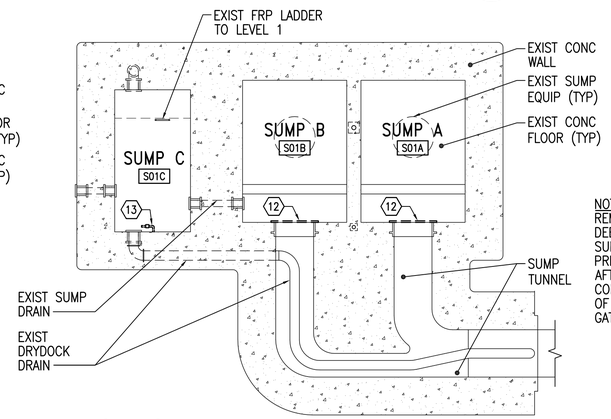

REMOVALS SUMP LEVEL PLAN (ELEV -44.78'±)

SCALE: 1/8" = 1'-0"

PLAN NORTH

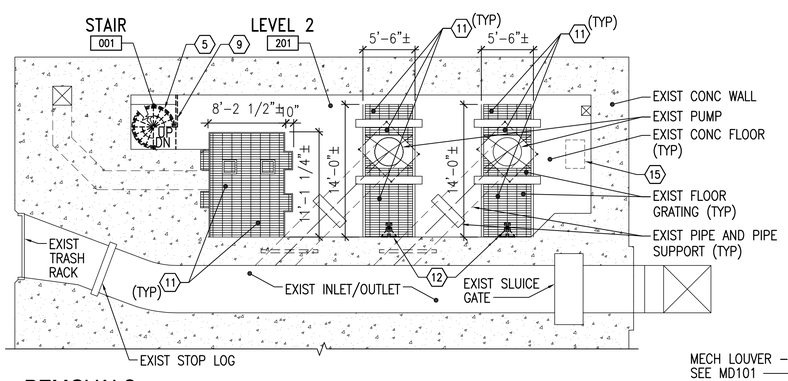

REMOVALS LEVEL 2 PLAN (ELEV -19.78'±)

SCALE: 1/8" = 1'-0"

PLAN NORTH

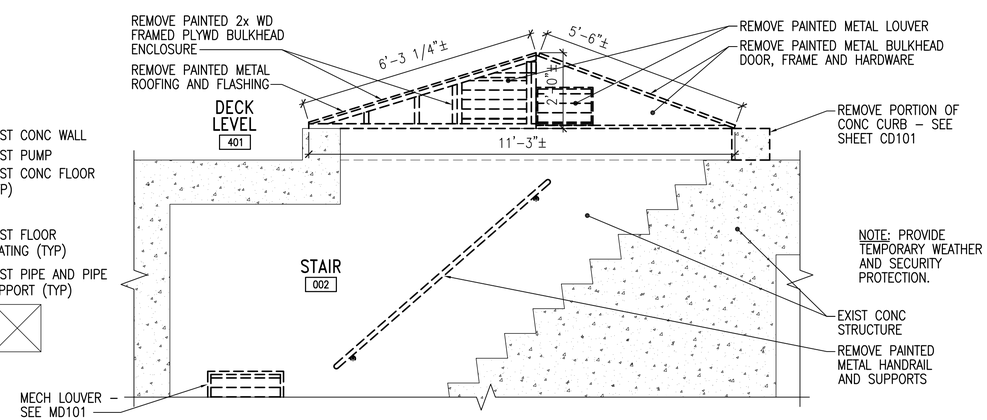

BULKHEAD REMOVALS DETAIL

SCALE: 1/2"=1'-0"

AD101 A3

GRAPHIC SCALES

1/8"=1'-0" 8' 4' 0 8' 16'

1/2"=1'-0" 2' 1' 0 2' 4'

CHECK GRAPHIC SCALES BEFORE USING

SYM	DESCRIPTION	DATE	APPR
FINAL SUBMISSION		JAN 07, 2015	PFD

NAVFAC

LICENSED ARCHITECT PATRICIA F. WESTON No. 3794 STATE OF MAINE 01/07/15

OAK POINT ASSOCIATES

A/E INFO

APPROVED

FOR COMMANDER NAVFAC

ACTIVITY

SEE G-001 FOR DDCB BLOCK

SATISFACTORY TO DATE 01/07/15

DES KTW DRW JMR CHK PFD

PM/DM R C PANTEL

BRANCH MANAGER AMIN BAHROUR

CHIEF ENG/ARCH LCDR J ROCHE

FIRE PROTECTION P BAKAJ

DEPARTMENT OF THE NAVY
NAVAL FACILITIES ENGINEERING COMMAND ~ MID-ATLANTIC
PWD-MANE
NAVAL SHIPYARD PORTSMOUTH NAVAL SHIPYARD ~ KITTERY, ME

DRY DOCK #3 PUMP WELL REPAIRS

REMOVALS FLOOR PLANS AND DETAILS

MAXIMO No:

EPROJECT NO.: 1332591

CONSTR. CONTR. NO. N40085-15-C-6109

NAVFAC DRAWING NO. 12686301

SHEET 33 OF 66

AD101 DD3-14-692

DRAWFORM REVISION: 10 MARCH 2009

21 Jan, 2015 – 11:38am
C:\Drfle\21105.16-AD101.dwg

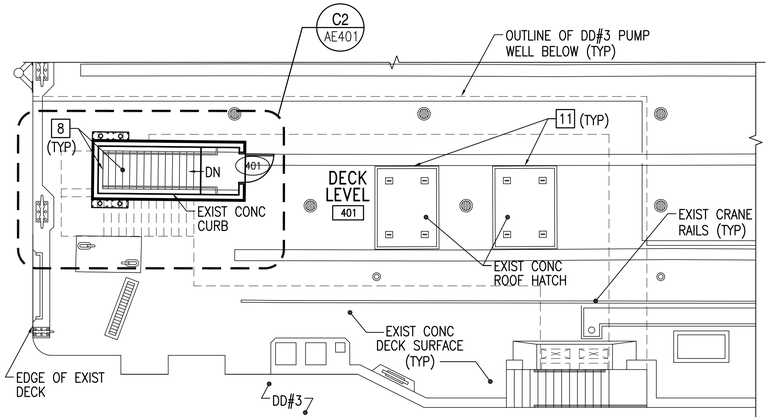

DECK LEVEL PLAN (ELEV 9.72'±)

SCALE: 1/8" = 1'-0"

PLAN NORTH

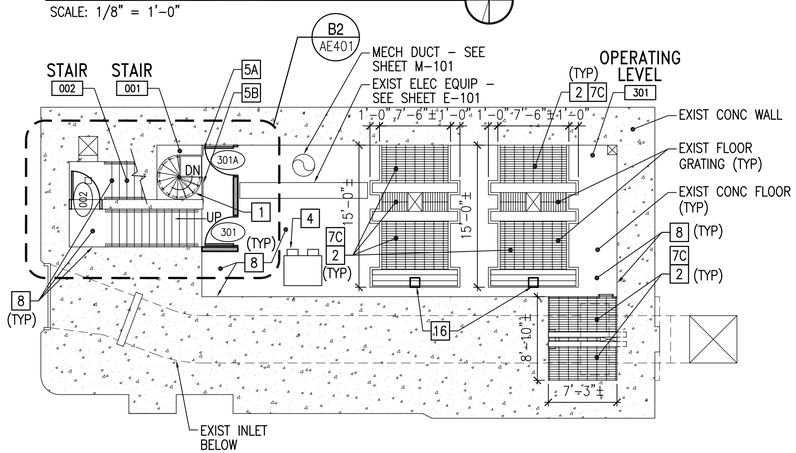

OPERATING LEVEL PLAN (ELEV -7.28'±)

SCALE: 1/8" = 1'-0"

PLAN NORTH

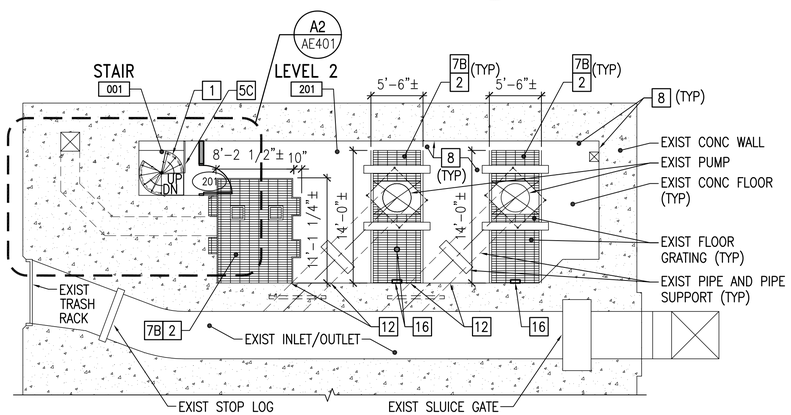

LEVEL 2 PLAN (ELEV -19.78'±)

SCALE: 1/8" = 1'-0"

PLAN NORTH

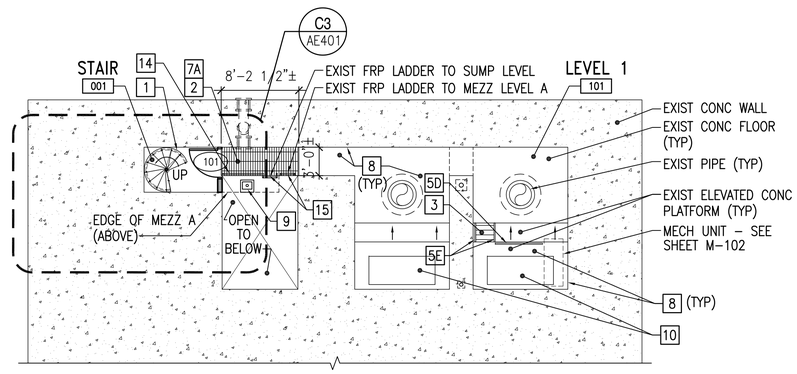

LEVEL 1 PLAN (ELEV -36.78'±)

SCALE: 1/8" = 1'-0"

PLAN NORTH

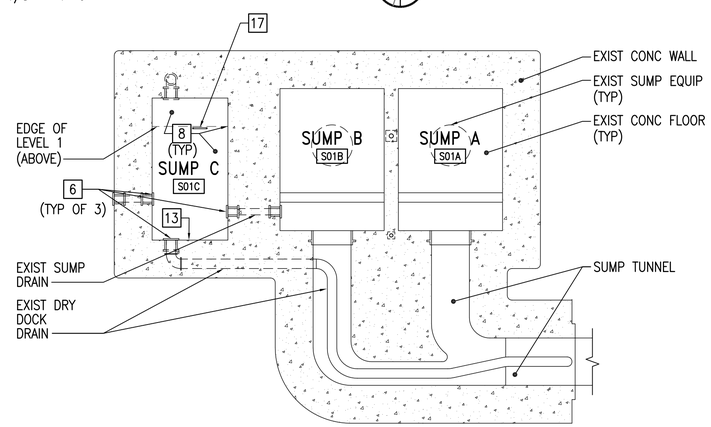

SUMP LEVEL PLAN (ELEV -44.78'±)

SCALE: 1/8" = 1'-0"

PLAN NORTH

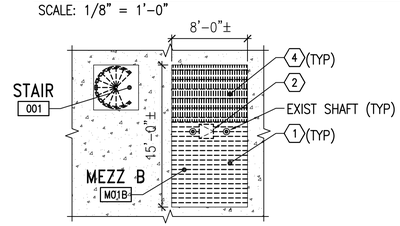

OPTION 2 - REMOVALS MEZZANINE LEVEL B - PLAN

SCALE: 1/8" = 1'-0"

PLAN NORTH

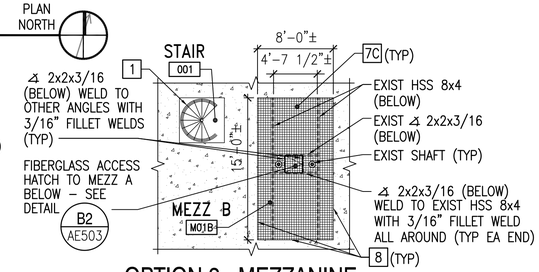

OPTION 2 - MEZZANINE LEVEL B - PLAN (ELEV -25.53'±)

SCALE: 1/8" = 1'-0"

PLAN NORTH

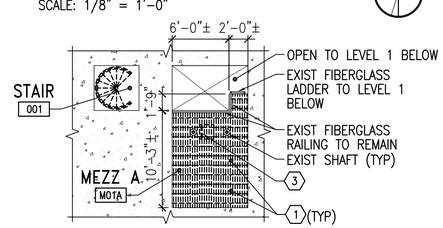

OPTION 2 - REMOVALS MEZZANINE LEVEL A - PLAN

SCALE: 1/8" = 1'-0"

PLAN NORTH

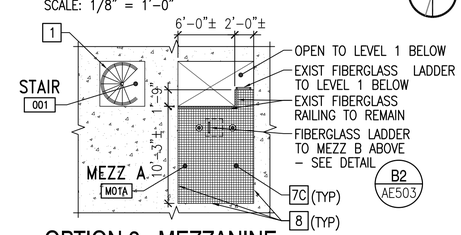

OPTION 2 - MEZZANINE LEVEL A - PLAN (ELEV -32.20'±)

SCALE: 1/8" = 1'-0"

PLAN NORTH

GENERAL SHEET NOTES

1. REFER TO G-003 FOR GENERAL CONSTRUCTION AND SEQUENCING NOTES.
2. SEE SHEET AE601 FOR DOOR SCHEDULE.
3. SEE ENLARGED FLOOR PLANS FOR WALL TYPE DESIGNATIONS.

KEYNOTES (THIS SHEET ONLY)

1. STAINLESS STEEL SPIRAL STAIR. SEE SHEET AE402 FOR DETAILS.
2. CLEAN AND PAINT FLOOR GRATING: SEE DETAIL C4/AE503. PROVIDE TEMPORARY FALL PROTECTION AT EXIST OPENINGS IN FLOOR WHILE GRATING IS REMOVED. DELETE IF OPTION 2 IS SELECTED.
3. FIBERGLASS LADDER. SEE DETAIL C5/AE501.
4. REINSTALL DRY DOCK PUMP EQUIPMENT. COORDINATE LOCATION SEQUENCING WITH CONTRACTING OFFICER. COORDINATE WITH ELECTRICAL SEQUENCING ON SHEET E-001.
5. METAL GUARDRAIL.
   - A. SEE DETAIL A1-A/AE501
   - B. SEE DETAIL A1-B/AE501
   - C. SEE DETAIL A1-C/AE501
   - D. SEE DETAIL A1-D/AE501
   - E. SEE DETAIL A1-E/AE501
6. OPTION 1 – PIPE PENETRATION REPAIR. SEE SHEET M-301.
7. OPTION 2 – FIBERGLASS FLOOR GRATING. SEE DETAIL B4/AE503.
   - A. 1" HIGH GRATING
   - B. 1-1/2" HIGH GRATING
   - C. 2" HIGH GRATING
8. OPTION 4 – CLEAN AND PAINT INTERIOR CONCRETE SURFACES.
   - WALLS ~7,000 SF
   - FLOORS ~2,000 SF
   - CEILINGS ~2,000 SF
9. SAMPLING SINK – COORDINATE WITH MECHANICAL DRAWINGS.
10. PROVIDE CONCRETE FILL AT PRESSURE PLATE REMOVALS. SEE DETAIL C4/AE501.
11. PROVIDE SEALANT AT PERIMETER OF REINSTALLED CONCRETE ROOF HATCH.
12. WALL REPAIR AT EXISTING PIPE PENETRATION. SEE DETAIL A3/S-506.
13. PATCH WALL AT REMOVED PIPE. SEE DETAIL D5/AE502.
14. PROVIDE 42"± HIGH 2"x2" FIBERGLASS POST AT EXISTING CUT RAILING TO PROVIDE VERTICAL SUPPORT. TYPICAL OF 2.
15. PROVIDE FIBERGLASS SWING GATE AT RAILING OPENING.
16. PATCH FLOOR GRATING AT SLUICE GATE/MECHANICAL EQUIPMENT REMOVALS. SEE DETAIL D1/AE503.
17. EXISTING FIBERGLASS LADDER – SECURE BOTTOM OF LADDER TO SUMP LEVEL FLOOR.

REMOVALS KEYNOTES (THIS SHEET ONLY)

1. OPTION 2 – REMOVE EXISTING METAL/FIBERGLASS FLOOR GRATING.
2. OPTION 2 – REMOVE WOOD ACCESS HATCH.
3. OPTION 2 – REMOVE WOOD LADDER.
4. OPTION 2 – REMOVE WOOD DECKING.

GRAPHIC SCALE

1/8"=1'-0" 8' 4' 0 8' 16'

CHECK GRAPHIC SCALE BEFORE USING

PFD				APPR
JAN 07, 2015				DATE
FINAL SUBMISSION				DESCRIPTION
				SYM

NAVFAC

LICENSED ARCHITECT KIMBERLY T. WESTON No. 3794 STATE OF MAINE 01/07/15

OAK POINT ASSOCIATES

A/E INFO

APPROVED

FOR COMMANDER NAVFAC

ACTIVITY

SEE G-001 FOR DDCB BLOCK

SATISFACTORY TO DATE 01/07/15

DES KTW DRW JMR CHK PFD

PM/DM R C PANTEL

BRANCH MANAGER AMIN BAHROUR

CHIEF ENG/ARCH LCDR J ROCHE

FIRE PROTECTION P BAKAJ

DEPARTMENT OF THE NAVY
NAVAL FACILITIES ENGINEERING COMMAND
NAVAL FACILITIES ENGINEERING COMMAND ~ MID-ATLANTIC
PWD-MAINE
PORTSMOUTH NAVAL SHIPYARD – KITTERY, ME
NAVAL SHIPYARD KITTERY, ME

DRY DOCK #3 PUMP WELL REPAIRS

FLOOR PLANS

MAXIMO No:

EPROJECT NO.: 1332591

CONSTR. CONTR. NO. N40085-15-C-6109

NAVFAC DRAWING NO. 12686302

SHEET 34 OF 66

AE101 DD3-14-693

DRAWFORM REVISION: 10 MARCH 2009

21 Jan, 2015 – 11:39am
C:\Drfile\21105.16-AE101.dwg

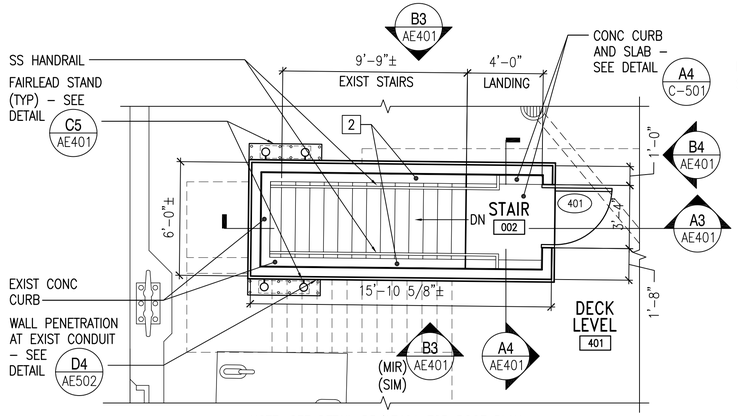

NOTE: SEE DETAIL B5/AE401 FOR ROOF PLAN.

DECK LEVEL PART PLAN

SCALE: 1/4"=1'–0" AE101 C2

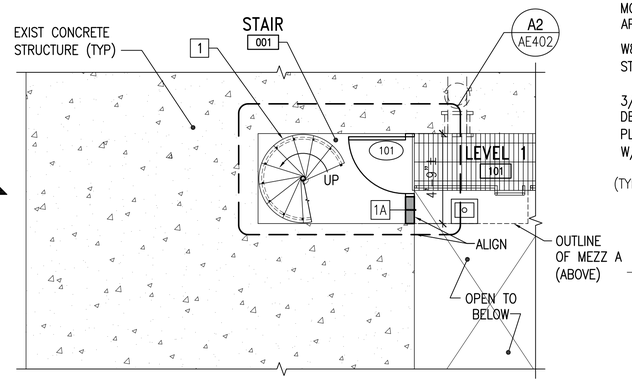

LEVEL 1 PART PLAN

SCALE: 1/4"=1'–0" AE101 C3

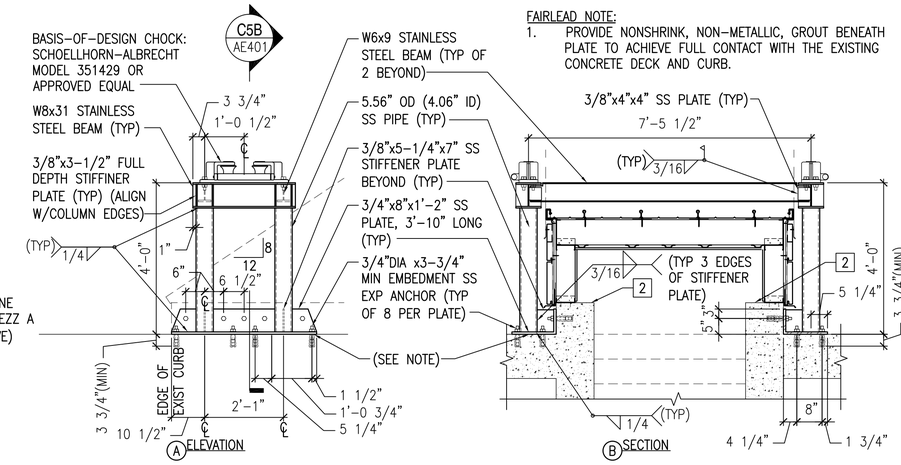

FAIRLEAD NOTE:
1. PROVIDE NONSHRINK, NON–METALLIC, GROUT BENEATH PLATE TO ACHIEVE FULL CONTACT WITH THE EXISTING CONCRETE DECK AND CURB.

FAIRLEAD STAND DETAIL

SCALE: 1/2"=1'–0" C–101, AE401 C5

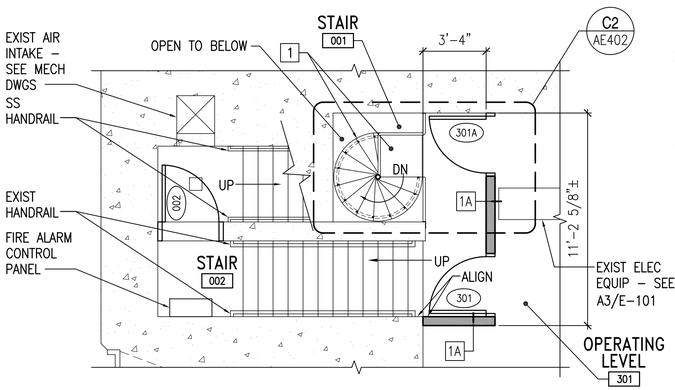

OPERATING LEVEL PART PLAN

SCALE: 1/4"=1'–0" AE101 B2

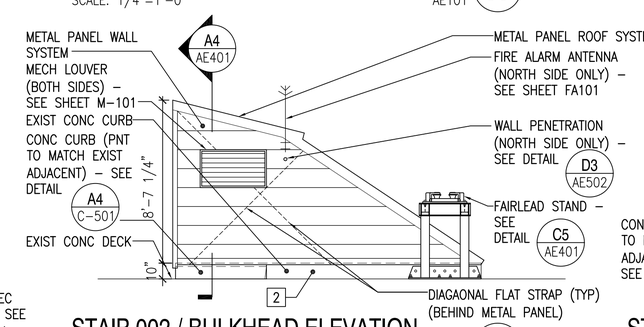

STAIR 002 / BULKHEAD ELEVATION

SCALE: 1/4"=1'–0" AE401 B3

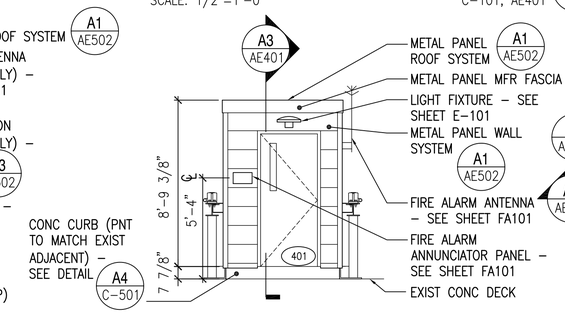

STAIR 002 / BULKHEAD ELEVATION

SCALE: 1/4"–1'–0" AE401 B4

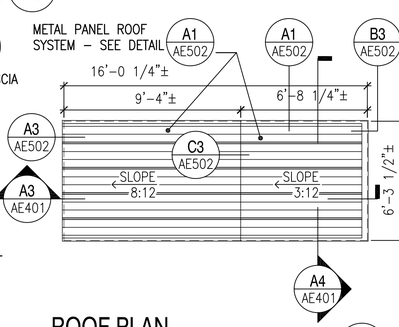

ROOF PLAN

SCALE: 1/4"=1'–0" AE401 B5

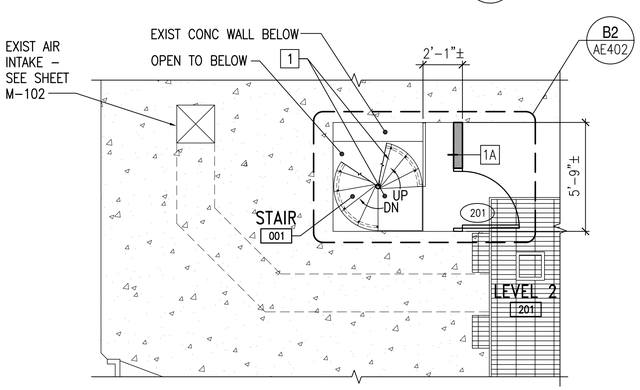

LEVEL 2 PART PLAN

SCALE: 1/4"=1'–0" AE101 A2

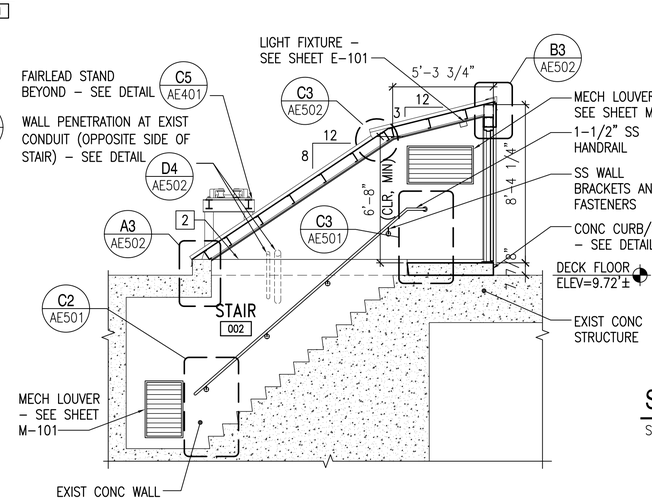

STAIR 002 / BULKHEAD SECTION

SCALE: 1/4"=1'–0" AE401 A3

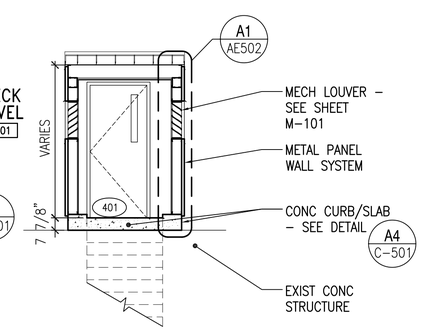

STAIR 002 / BULKHEAD SECTION

SCALE: 1/4"=1'–0" AE401 A4

GENERAL SHEET NOTES

1. SEE SHEET AE601 FOR DOOR SCHEDULE.
2. SEE SHEET AE503 FOR WALL TYPES.
3. 3/4" DIAMETER ANCHOR/EXPANSION BOLTS SHALL HAVE THE FOLLOWING MINIMUM ALLOWABLE CAPACITIES IN CONCRETE PRIOR TO ADJUSTMENT FACTORS:
   a. SHEAR = 4,610 LBS
   b. TENSION = 3,225 LBS

KEYNOTES (THIS SHEET ONLY)

1. SPRIAL STAIR. SEE SHEET AE402 FOR DETAILS.
2. EXISTING CONCRETE CURB AT BASE OF BULKHEAD IS NOT LEVEL. CONSTRUCT WALLS TO CONFORM TO EXISTING CURB PROFILE (DO NOT SHIM BENEATH BULKHEAD WALLS).

GRAPHIC SCALES

1/4"=1'–0" 4' 2' 0 4' 8'

1/2"=1'–0" 2' 1' 0 2' 4'

CHECK GRAPHIC SCALES BEFORE USING

PFD			APPR
JAN 07, 2015			DATE
FINAL SUBMISSION			DESCRIPTION
			SYM

NAVFAC

LICENSED ARCHITECT KIMBERLY A. WESTON No. 3794 STATE OF MAINE 01/07/15

OAK POINT ASSOCIATES ARCHITECTURE • LANDSCAPE ARCHITECTURE

A/E INFO

APPROVED

FOR COMMANDER NAVFAC

ACTIVITY

SEE G–001 FOR DDCB BLOCK

SATISFACTORY TO DATE 01/07/15

DES KTW DRW JMR CHK PFD

PM/DM R C PANTEL

BRANCH MANAGER AMIN BAHROUR

CHIEF ENG/ARCH LCDR J ROCHE

FIRE PROTECTION P BAKAJ

DEPARTMENT OF THE NAVY
NAVAL FACILITIES ENGINEERING COMMAND
PWD–MAINE
NAVAL FACILITIES ENGINEERING COMMAND ~ MID-ATLANTIC
PORTSMOUTH NAVAL SHIPYARD ~ KITTERY, ME
NAVAL SHIPYARD KITTERY, ME

DRY DOCK #3 PUMP WELL REPAIRS

ENLARGED PART PLANS, SECTIONS AND DETAILS

MAXIMO No:

EPROJECT NO.: 1332591

CONSTR. CONTR. NO. N40085–15–C–6109

NAVFAC DRAWING NO. 12686303

SHEET 35 OF 66

AE401 DD3-14-694

DRAWFORM REVISION: 10 MARCH 2009

21 Jan, 2015 – 11:40am
C:\DFile\21105.16–AE401.dwg

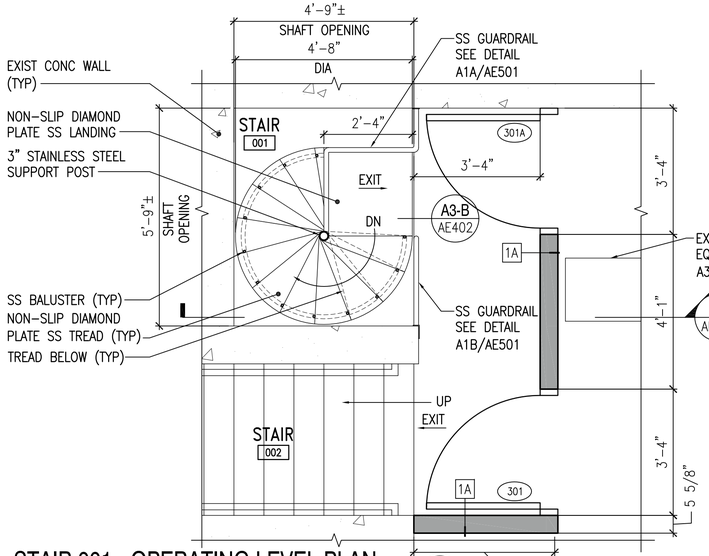

STAIR 001 - OPERATING LEVEL PLAN

SCALE: 1/2"=1'-0" AE401, AE501 **C2**

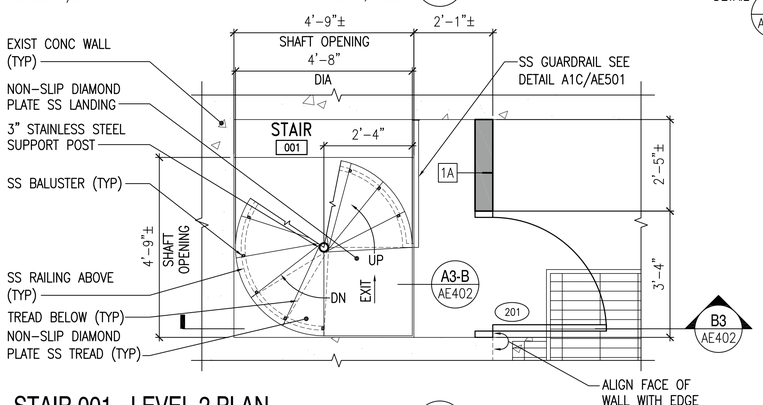

STAIR 001 - LEVEL 2 PLAN

SCALE: 1/2"=1'-0" AE401 **B2**

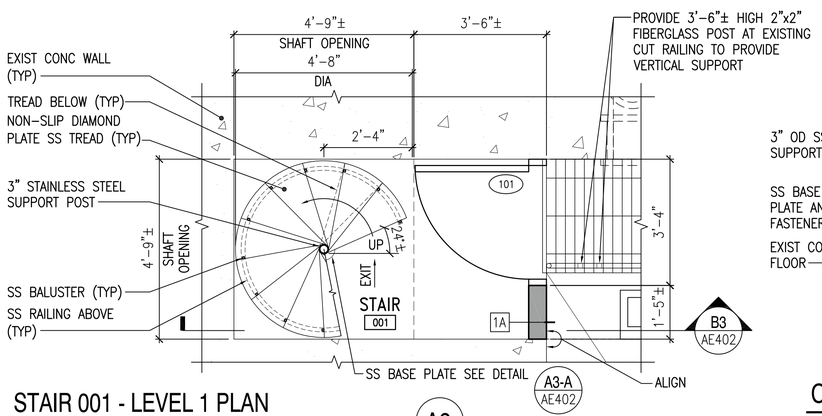

STAIR 001 - LEVEL 1 PLAN

SCALE: 1/2"=1'-0" AE401 **A2**

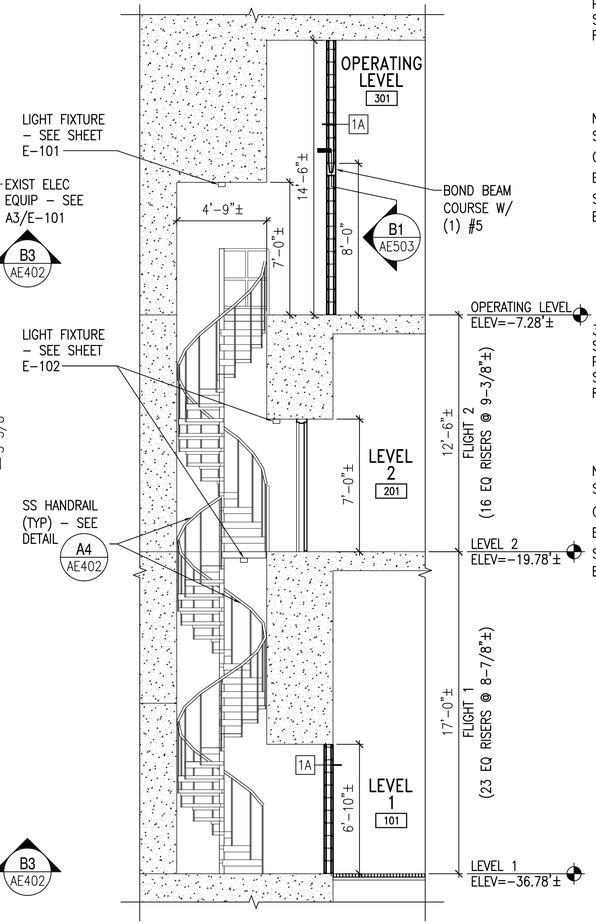

STAIR 001 SECTION

SCALE: 1/4"=1'-0" AE402 **B3**

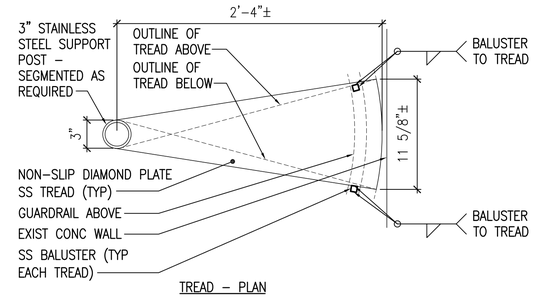

TREAD - PLAN

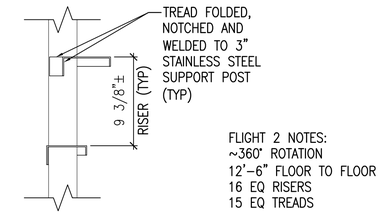

TREAD - SECTION

FLIGHT 2 NOTES:
~360° ROTATION
12'-6" FLOOR TO FLOOR
16 EQ RISERS
15 EQ TREADS

FLIGHT 2 DETAILS

SCALE: 1-1/2"=1'-0" AE402 **D4**

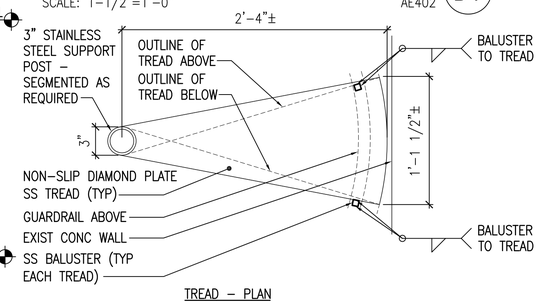

TREAD - PLAN

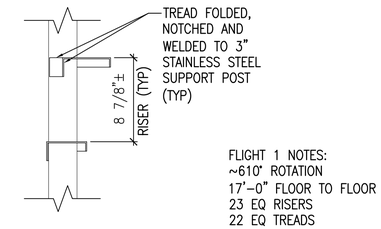

TREAD - SECTION

FLIGHT 1 NOTES:
~610° ROTATION
17'-0" FLOOR TO FLOOR
23 EQ RISERS
22 EQ TREADS

FLIGHT 1 DETAILS

SCALE: 1-1/2"=1'-0" AE402 **C4**

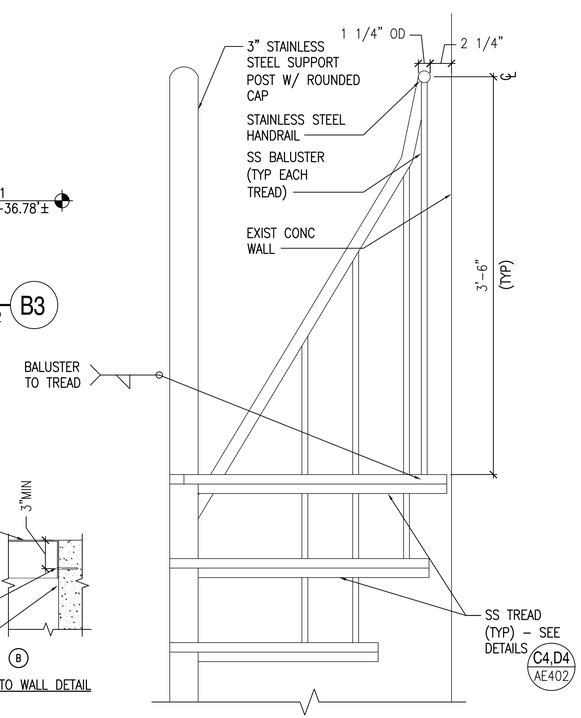

HANDRAIL DETAIL

SCALE: 1-1/2"=1'-0" AE402 **A4**

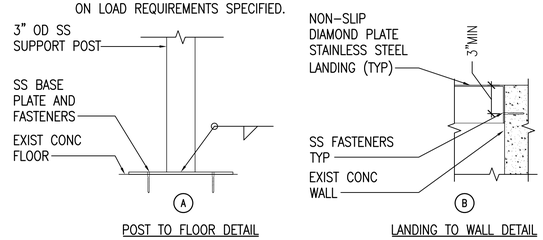

CONNECTION DETAILS

SCALE: 1-1/2"=1'-0" AE402 **A3**

SPIRAL STAIR GENERAL NOTES

1. WELD SIZES, FASTENERS AND CONNECTIONS SHALL BE AS DETERMINED BY THE SPIRAL STAIR DESIGN ENGINEER BASED ON LOAD REQUIREMENTS SPECIFIED. GRIND EXPOSED WELDS SMOOTH.
2. SPIRAL STAIR SHALL BE CONSTRUCTED IN PRE-ASSEMBLED SEGMENTS TO THE GREATEST EXTENT POSSIBLE; COORDINATE WITH EXISTING OPENINGS AND CLEARANCES.
3. PROVIDE TEMPORARY EGRESS FROM LEVEL 1 AND LEVEL 2 DURING SPIRAL STAIR WORK. SEE SHEET G-003 FOR ADDITIONAL INFORMATION.

GENERAL SHEET NOTE

1. SEE SHEET AE503 FOR WALL TYPE AND SHEET AE601 FOR DOOR SCHEDULE.

GRAPHIC SCALES

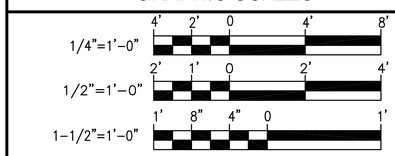

CHECK GRAPHIC SCALES BEFORE USING

FINAL SUBMISSION	JAN 07, 2015	PFD	
SYM	DESCRIPTION	DATE	APPR

NAVFAC

LICENSED ARCHITECT PAUL F. WESTON No. 3794 STATE OF MAINE 01/07/15

OAK POINT ASSOCIATES
ARCHITECTURE • ENGINEERING • PLANNING

A/E INFO

APPROVED

FOR COMMANDER NAVFAC

ACTIVITY

SEE G-001 FOR DDCB BLOCK

SATISFACTORY TO DATE 01/07/15

DES KTW DRW JMR CHK PFD

PM/DM R C PANTEL

BRANCH MANAGER AMIN BAHROUR

CHIEF ENG/ARCH LCDR J ROCHE

FIRE PROTECTION P BAKAJ

DEPARTMENT OF THE NAVY
NAVAL FACILITIES ENGINEERING COMMAND ~ MID-ATLANTIC
PWD-MANE
NAVAL SHIPYARD PORTSMOUTH NAVAL SHIPYARD ~ KITTERY, ME

DRY DOCK #3 PUMP WELL REPAIRS

ENLARGED SPIRAL STAIR PART PLANS, SECTION AND DETAILS

MAXIMO No:

EPROJECT NO.: 1332591

CONSTR. CONTR. NO. N40085-15-C-6109

NAVFAC DRAWING NO. 12686304

SHEET 36 OF 66

AE402 | DD3-14-695

DRAWFORM REVISION: 10 MARCH 2009

21 Jan, 2015 - 11:41am
C:\DFile\21105.16-AE402.dwg

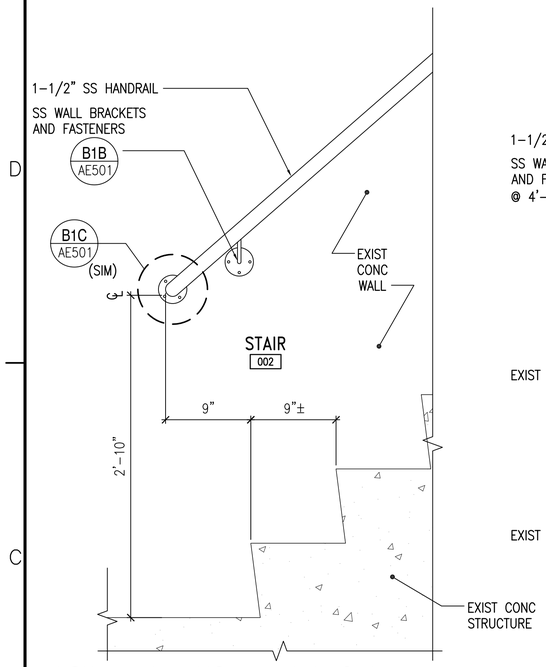

LOWER LANDING DETAIL AT STAIR RUN (C2)

SCALE: 1-1/2"=1'-0" AE401

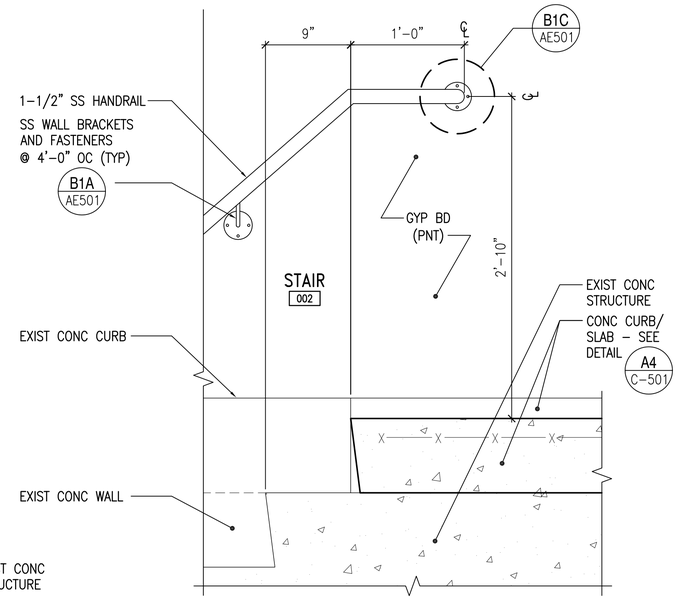

UPPER LANDING DETAIL AT STAIR RUN (C3)

SCALE: 1-1/2"=1'-0" AE401

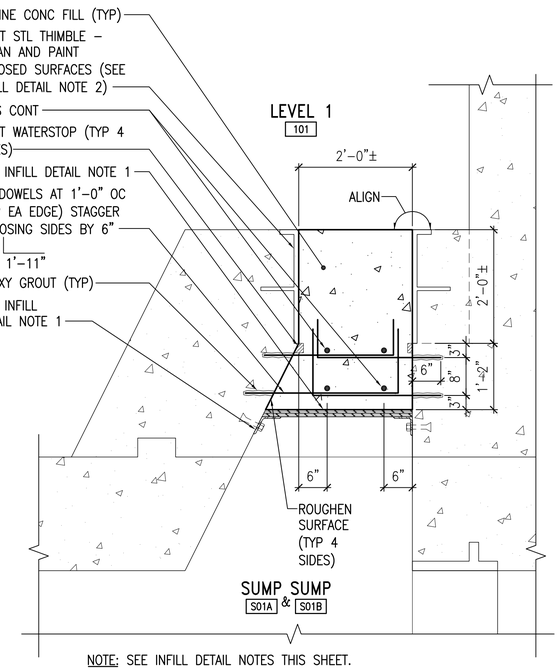

NOTE: SEE INFILL DETAIL NOTES THIS SHEET.

INFILL DETAIL AT REMOVED SLUICE GATE (C4)

SCALE: 3/4"=1'-0" AE101

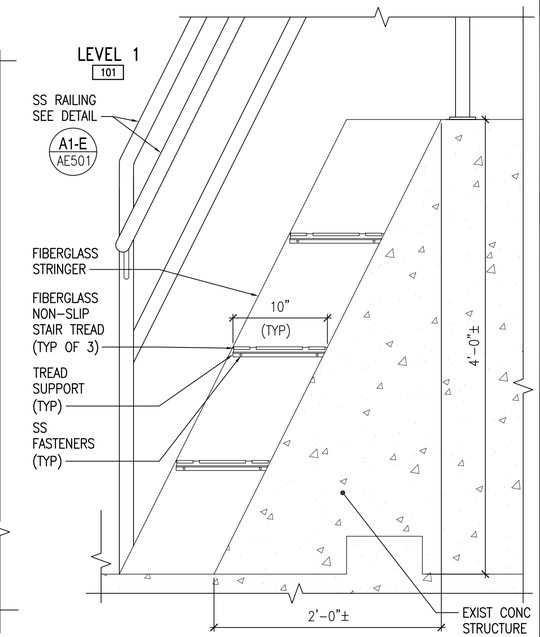

FIBERGLASS LADDER DETAIL (C5)

SCALE: 1-1/2"=1'-0" AE101, AE501

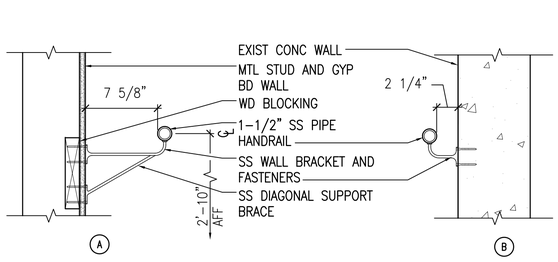

RAILING TO WALL ATTACHMENT SECTION DETAILS

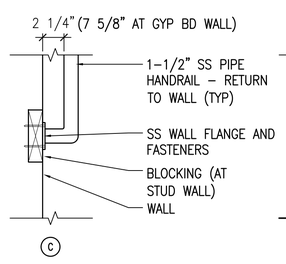

RAILING TO WALL PLAN DETAIL

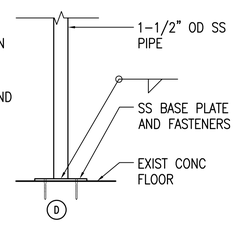

RAILING TO FLOOR DETAIL

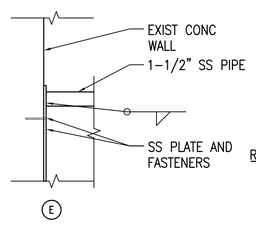

RAILING TO WALL DETAIL

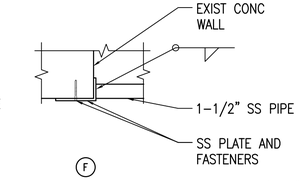

RAILING TO WALL PLAN DETAIL

TYPICAL RAILING ATTACHMENT DETAILS (B1)

SCALE: 1-1/2"=1'-0" AE501

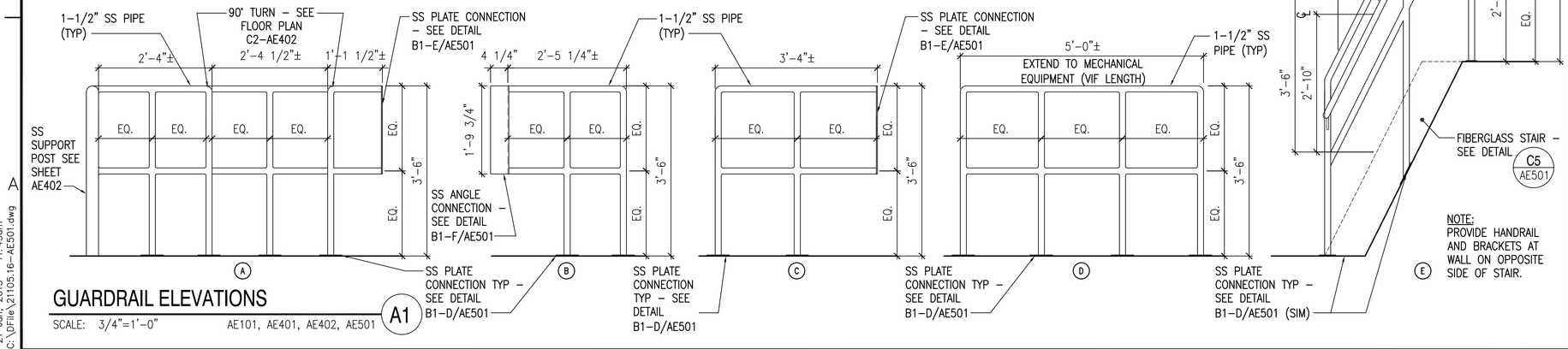

NOTE: PROVIDE HANDRAIL AND BRACKETS AT WALL ON OPPOSITE SIDE OF STAIR.

GUARDRAIL ELEVATIONS (A1)

SCALE: 3/4"=1'-0" AE101, AE401, AE402, AE501

INFILL DETAIL NOTES:

1. DESIGN AND INSTALL FORMWORK TO SUPPORT THE CONCRETE FILL UNTIL IT REACHES ITS DESIGN STRENGTH. REMOVE THE FORMWORK AND PATCH FASTENER HOLES AFTER THE CONCRETE HAS BEEN APPROVED AND ACCEPTED BY THE CONTRACTING OFFICER'S REPRESENTATIVE. REMOVAL WILL REQUIRE ACCESS INTO SUMPS S01A AND S01B WHICH ARE CONFINED SPACES.
2. CLEAN AND PREPARE SURFACES OF EXISTING STEEL THIMBLE IN ACCORDANCE WITH SSPC-SP3 POWER TOOL CLEANING PRIOR TO PLACING CONCRETE FILL.

GRAPHIC SCALES

3/4"=1'-0" 1' 6" 0 1' 2' 3'

1-1/2"=1'-0" 1' 8" 4" 0 1'

CHECK GRAPHIC SCALES BEFORE USE

PFD	JAN 07, 2015	FINAL SUBMISSION	
APPR	DATE	DESCRIPTION	SYM

NAVFAC

LICENSED ARCHITECT ROBERT J. WESTON No. 3794 STATE OF MAINE 01/07/15

OAK POINT ASSOCIATES

A/E INFO

APPROVED

FOR COMMANDER NAVFAC

ACTIVITY

SEE G-001 FOR DDCB BLOCK

SATISFACTORY TO DATE 01/07/15

DES KTW DRW JMR CHK PFD

PM/DM R C PANTEL

BRANCH MANAGER AMIN BAHROUR

CHIEF ENG/ARCH LCDR J ROCHE

FIRE PROTECTION P BAKAJ

DEPARTMENT OF THE NAVY
NAVAL FACILITIES ENGINEERING COMMAND
PWD-MAINE

NAVAL FACILITIES ENGINEERING COMMAND ~ MID-ATLANTIC
PORTSMOUTH NAVAL SHIPYARD ~ KITTERY, ME

NAVAL SHIPYARD KITTERY, ME

DRY DOCK #3 PUMP WELL REPAIRS

DETAILS - 1

MAXIMO No:

EPROJECT NO.: 1332591

CONSTR. CONTR. NO. N40085-15-C-6109

NAVFAC DRAWING NO. 12686305

SHEET 37 OF 66

AE501 DD3-14-696

DRAWFORM REVISION: 10 MARCH 2009

21 Jan. 2015 - 11:43am
C:\Dfile\21105.16-AE501.dwg

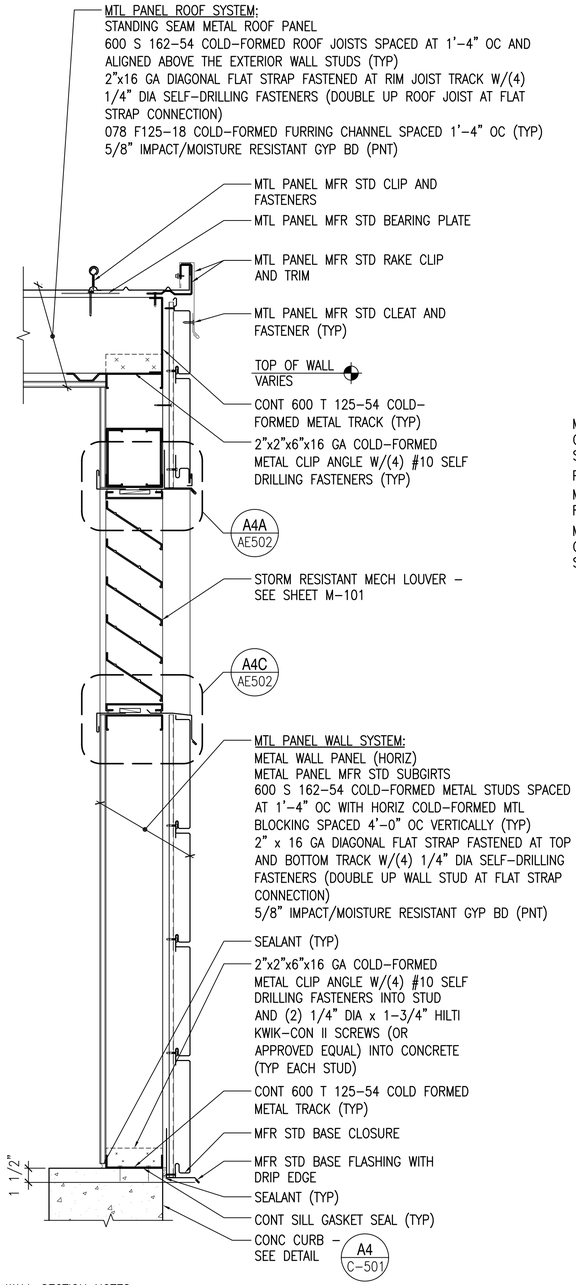

WALL SECTION NOTES:

1. EXISTING CONCRETE CURB AT BASE OF BULKHEAD IS NOT LEVEL. CONSTRUCT WALLS TO CONFORM TO EXISTING CURB PROFILE (DO NOT SHIM BENEATH BULKHEAD WALLS).
2. PROVIDE CONTINUOUS BITUMINOUS COATING (ASTM D1187) ON METAL STUDS THAT COME IN CONTACT WITH CONCRETE.
3. GYPSUM BOARD FINISH SHALL REMAIN 1/2" ABOVE CONCRETE SLAB/CURB (TYPICAL). PROVIDE CONTINUOUS SEALANT AT BASE OF WALL.

WALL SECTION A1

SCALE: 1-1/2"=1'-0" AE401, AE501, AE601

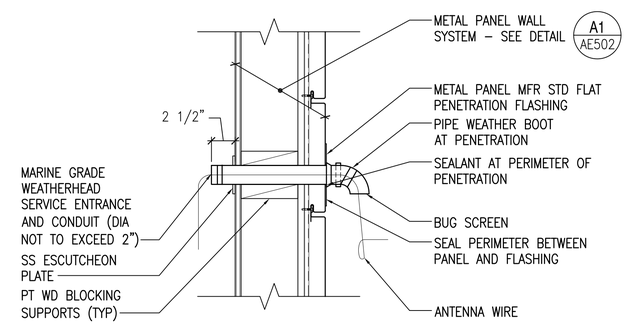

WEATHERHEAD DETAIL D3

SCALE: 1-1/2"=1'-0" AE401

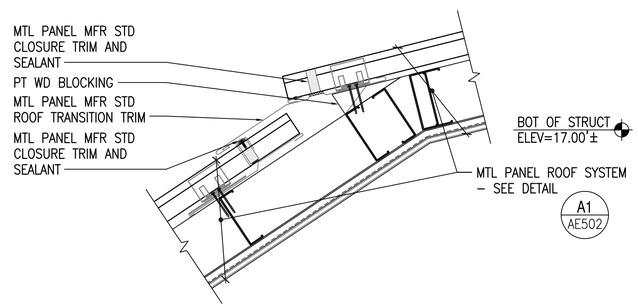

ROOF SLOPE TRANSITION DETAIL C3

SCALE: 1-1/2"=1'-0" AE401

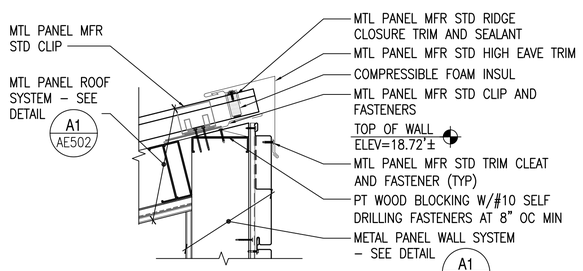

HIGH EAVE DETAIL B3

SCALE: 1-1/2"=1'-0" AE401

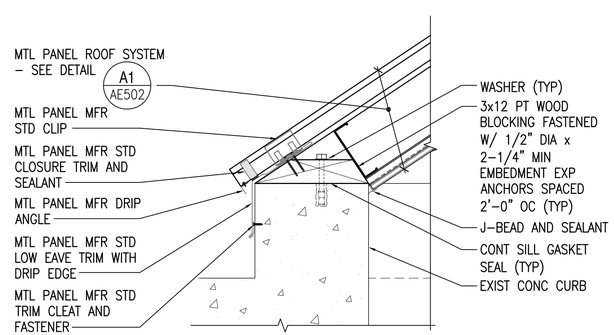

LOW EAVE DETAIL A3

SCALE: 1-1/2"=1'-0" AE401

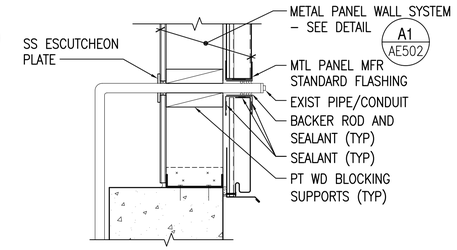

WALL PENETRATION DETAIL D4

SCALE: 1-1/2"=1'-0" AE401

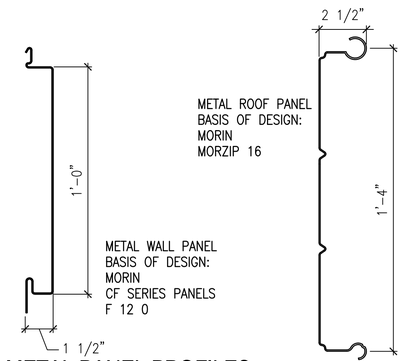

METAL PANEL PROFILES C4

SCALE: 3"=1'-0" AE502

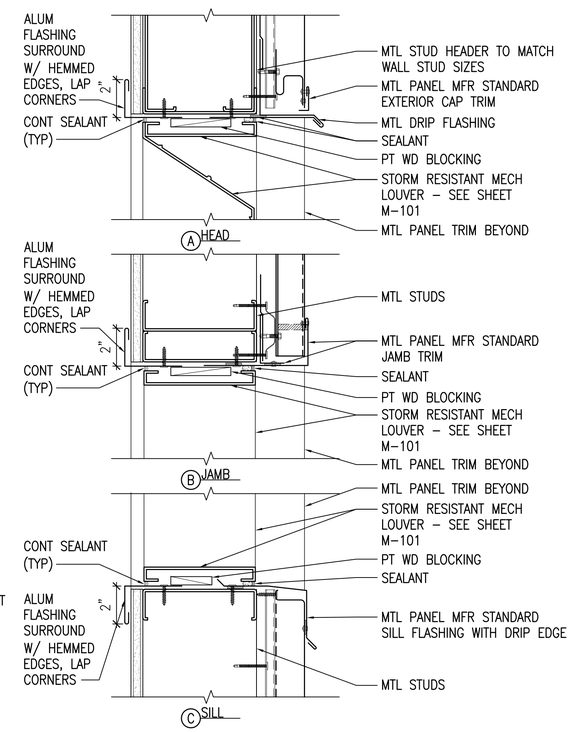

LOUVER DETAIL A4

SCALE: 3"=1'-0" AE401

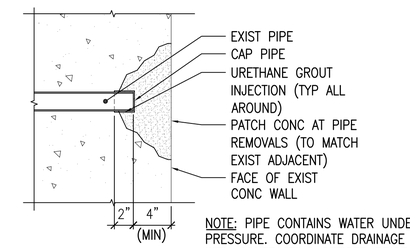

NOTE: PIPE CONTAINS WATER UNDER PRESSURE. COORDINATE DRAINAGE WITH CONTRACTING OFFICER PRIOR TO REMOVAL AND CAP.

WALL PATCH DETAIL D5

SCALE: 1-1/2"=1'-0" AE101, MD102

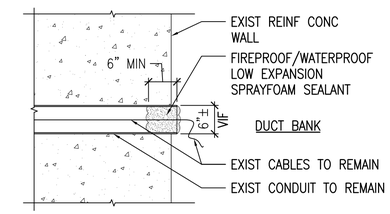

NOTES:

1. SEAL CONDUITS AT DUCT BANK/PUMP WELL INTERSECTION AND DUCT BANK/UTILITY GALLERY INTERSECTION.
2. TYP OF 12 CONDUITS.

DUCT BANK CONDUIT SEAL DETAIL C5

SCALE: 3/4"=1'-0" C-101, E-501

COLD-FORMED FRAMING LEGEND

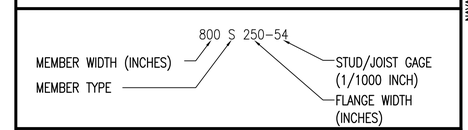

GENERAL NOTE

1. SEE SHEET AE601 FOR ROOM FINISH SCHEDULE.

GRAPHIC SCALES

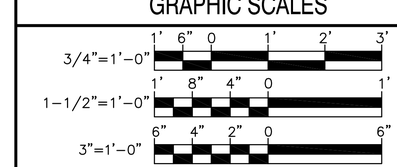

CHECK GRAPHIC SCALES BEFORE USE

PFD	JAN 07, 2015	FINAL SUBMISSION	SCM
APPR	DATE	DESCRIPTION	

NAVFAC

LICENSED ARCHITECT STEPHEN J. WESTON No. 3794 STATE OF MAINE 01/07/15

OAK POINT ASSOCIATES

A/E INFO

APPROVED

FOR COMMANDER NAVFAC

ACTIVITY

SEE G-001 FOR DDCB BLOCK

SATISFACTORY TO DATE 01/07/15

DES KTW DRW JMR CHK PFD

PM/DM R C PANTEL

BRANCH MANAGER AMIN BAHROUR

CHIEF ENG/ARCH LCDR J ROCHE

FIRE PROTECTION P BAKAJ

DEPARTMENT OF THE NAVY
NAVAL FACILITIES ENGINEERING COMMAND
PWD-MAINE
NAVAL FACILITIES ENGINEERING COMMAND ~ MID-ATLANTIC
PORTSMOUTH NAVAL SHIPYARD ~ KITTERY, ME
NAVAL SHIPYARD KITTERY, ME

DRY DOCK #3 PUMP WELL REPAIRS

DETAILS - 2

MAXIMO No:

EPROJECT NO.: 1332591

CONSTR. CONTR. NO. N40085-15-C-6109

NAVFAC DRAWING NO. 12686306

SHEET 38 OF 66

AE502 DD3-14-697

DRAWFORM REVISION: 10 MARCH 2009

21 Jan, 2015 - 11:43am
C:\DFile\21105.16-AE502.dwg

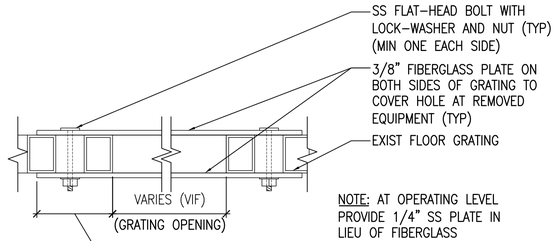

NOTE: AT OPERATING LEVEL PROVIDE 1/4" SS PLATE IN LIEU OF FIBERGLASS

FLOOR GRATING PATCH DETAIL (D1)

SCALE: 3"=1'-0" AE101

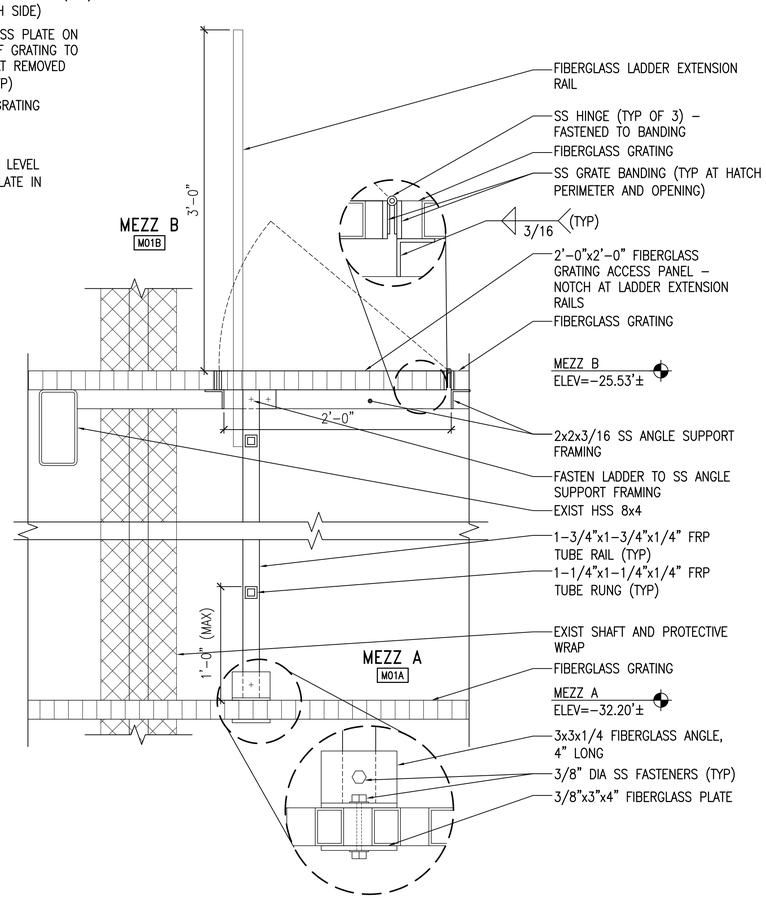

OPTION 2 - FIBERGLASS LADDER/HATCH DETAIL (B2)

SCALE: 1-1/2"=1'-0" AE101

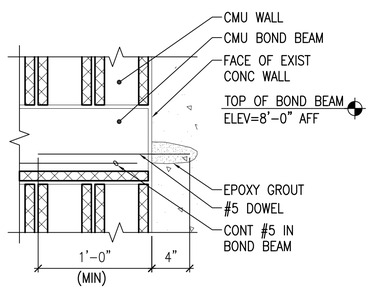

BOND BEAM TO WALL DETAIL (B1)

SCALE: 1-1/2"=1'-0" AE401

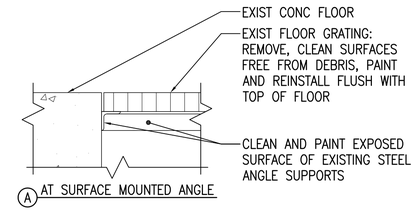

(A) AT SURFACE MOUNTED ANGLE

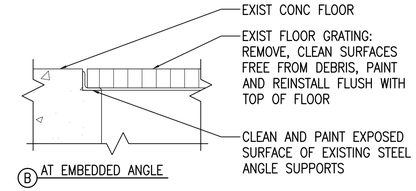

(B) AT EMBEDDED ANGLE

NOTE: PROVIDE TEMPORARY FALL PROTECTION AT REMOVED GRATING

CLEAN EXIST FIBERGLASS GRATING DETAIL (C4)

SCALE: 1-1/2"=1'-0" AE101

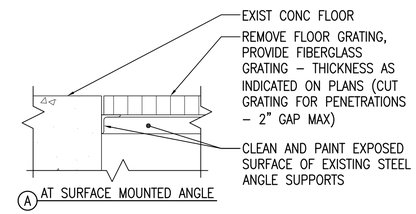

(A) AT SURFACE MOUNTED ANGLE

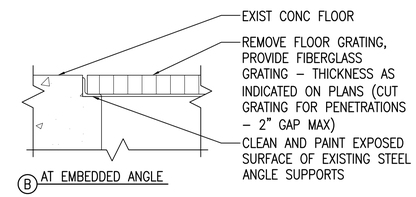

(B) AT EMBEDDED ANGLE

NOTES:
1. PROVIDE TEMPORARY FALL PROTECTION AT REMOVED GRATING
2. BASIS OF DESIGN PRODUCT IS THE MS S-200 2-INCH HEIGHT, MS S-150 1 1/2-INCH HEIGHT, OR MS S-100 1-INCH HEIGHT MOLDED FIBERGLASS GRATING WITH 1 1/2"x1 1/2" SQUARE MESH AS MANUFACTURED BY MCNICHOLS COMPANY.

OPTION 2 - FIBERGLASS GRATING DETAIL (B4)

SCALE: 1-1/2"=1'-0" AE101

NOTE: PROVIDE SHOP DRAWINGS WITH EQUIPMENT SHOWN AND DIMENSIONED PRIOR TO FABRICATION.

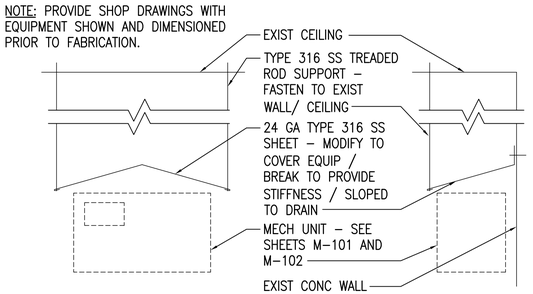

MECH EQUIP SHEILD DETAIL (A4)

SCALE: NOT TO SCALE M-101, M-102

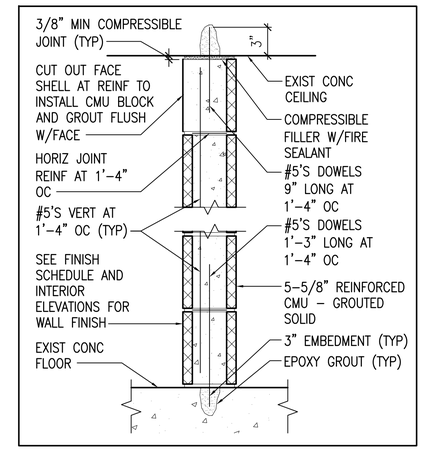

6" REINFORCED CMU WALL		1A
WIDTH = 5-5/8"	STC: N/A	
1 HR FIRE RATED, UL WALL ASSEMBLY #U906		

WALL TYPE NOTES:
1. PENETRATIONS THROUGH RATED WALL ASSEMBLIES SHALL BE FIRESTOPPED ON EACH SIDE OF THE WALL IN ACCORDANCE WITH THE FIRESTOPPING MANUFACTURER'S PRINTED INSTRUCTIONS. SEE A2/AE503.
2. COORDINATE WALL TYPE WITH FIRESTOPPING DETAILS.
3. TO ENSURE CONTINUITY OF FIRE-RATED CONSTRUCTION BOUNDARIES, FIRESTOP PENETRATIONS OF AND JOINTS BETWEEN RATED CONSTRUCTION. IN ADDITION TO THE FIRESTOPPING INDICATED ELSEWHERE, THESE LOCATIONS INCLUDE, BUT ARE NOT LIMITED TO:
   - CONCRETE WALL TO CMU WALL
   - EXPANSION JOINTS IN RATED CMU WALL
4. REFER TO UL LISTINGS FOR FULL INSTALLATION REQUIREMENTS.
5. SEE ROOM FINISH SCHEDULE ON SHEET AE601 FOR WALL FINISHES.

WALL TYPE

SCALE: 1-1/2"=1'-0" AE401, AE502, AE601

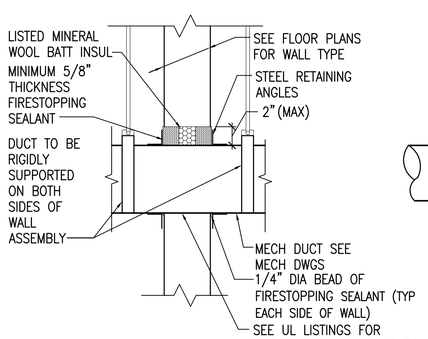

(A) DUCT W/ F RATING
SIM UL W-J-7007 (CMU)

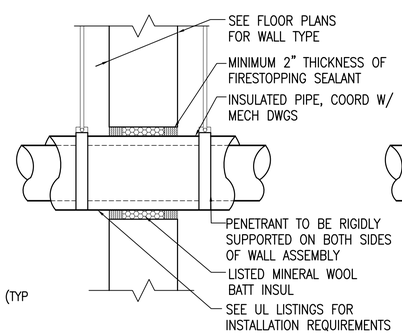

(B) INSULATED PIPE W/ F RATING
SIM UL C-AJ-5029 (CMU)

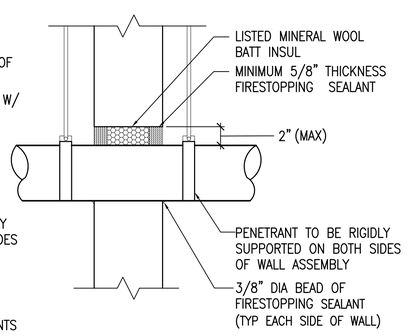

(C) BARE PIPE AND CONDUIT W/ F RATING
SIM UL C-AJ-1080 (CMU)

TYP WALL PENETRATION FIRESTOPPING DETAILS (A2)

SCALE: 1-1/2"=1'-0" AE503, FA101

NOTE:
F RATING - TIME RATING FOR FLAME SPREAD.

GRAPHIC SCALES

1-1/2"=1'-0" 1' 8" 4" 0 1'

3"=1'-0" 6" 4" 2" 0 6"

CHECK GRAPHIC SCALES BEFORE USE

SYM	DESCRIPTION	DATE	APPR
FINAL SUBMISSION		JAN 07, 2015	PFD

NAVFAC

LICENSED ARCHITECT PATRICIA A. WESTON NO. 3794 STATE OF MAINE 01/07/15

OAK POINT ASSOCIATES
ARCHITECTURE • LANDSCAPE ARCHITECTURE • PLANNING
A/E INFO

APPROVED
FOR COMMANDER NAVFAC
ACTIVITY
SEE G-001 FOR DDCB BLOCK
SATISFACTORY TO DATE 01/07/15
DES KTW DRW JMR CHK PFD
PM/DM R C PANTEL
BRANCH MANAGER AMIN BAHROUR
CHIEF ENG/ARCH LCDR J ROCHE
FIRE PROTECTION P BAKAJ

DEPARTMENT OF THE NAVY
NAVAL FACILITIES ENGINEERING COMMAND
PWD-MAINE
NAVAL SHIPYARD
NAVAL FACILITIES ENGINEERING COMMAND ~ MID-ATLANTIC
PORTSMOUTH NAVAL SHIPYARD - KITTERY, ME
KITTERY, ME

DRY DOCK #3 PUMP WELL REPAIRS

DETAILS - 3

MAXIMO No:
EPROJECT NO.: 1332591
CONSTR. CONTR. NO. N40085-15-C-6109
NAVFAC DRAWING NO. 12686307
SHEET 39 OF 66
AE503 DD3-14-698

DRAWFORM REVISION: 10 MARCH 2009

21 Jan, 2015 - 11:44am
C:\DFile\21105.16-AE503.dwg

DOOR SCHEDULE

DOOR						FRAME				DETAILS					
NO	QTY	W H THK	TYPE	MAT	FINISH	TYPE	MAT	WIDTH	FINISH	HEAD	JAMB	SILL	FIRE RATE	HDW SET	REMARKS
002	1	3'–0" x 7'–0" x 1–3/4"	NL	FRP	STD	EX	MTL	3'–5 1/2"	P4	A3C/AE601	A3B/AE601	A3A/AE601	–	3	A
101	1	3'–0" x 6'–8" x 1–3/4"	NL	FRP	STD	1	FRP	3'–4"	STD	A4C/AE601	A4A/A4C/AE601	–	60 MIN	2	B,C
201	1	3'–0" x 6'–10" x 1–3/4"	NL	FRP	STD	1	FRP	3'–4"	STD	A4C/AE601	A4A/A4C/AE601	–	60 MIN	2	B,C
301	1	3'–0" x 7'–0" x 1–3/4"	NL	FRP	STD	2	FRP	3'–4"	STD	A4B/AE601	A4A/AE601	–	60 MIN	2	B,C
301A	1	3'–0" x 7'–0" x 1–3/4"	NL	FRP	STD	2	FRP	3'–4"	STD	A4B/AE601	A4A/A4C/AE601	–	60 MIN	2	B,C
401	1	3'–0" x 7'–0" x 1–3/4"	NL	FRP	STD	1	FRP	3'–4"	STD	A2C/AE601	A2B/AE601	A2A/AE601	–	1	–

DOOR SCHEDULE REMARKS COLUMN

A. EXISTING DOOR FRAME. PREPARE FRAME FOR FINISH.

B. RATED GLAZING.

C. MAGNETIC HOLD OPEN.

DOOR SCHEDULE GENERAL NOTE

DOOR SCHEDULE KEY

FRP	FIBERGLASS REINFORCED PLASTIC	MAT	MATERIAL	STD	STANDARD
		MIN	MINUTE	T	THICKNESS
		MTL	METAL	W	WIDTH
EX	EXISTING	NO	NUMBER		
H	HEIGHT	P	PAINT		
HDW	HARDWARE	QTY	QUANTITY		

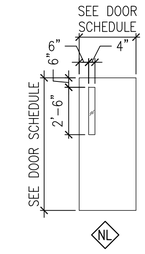

DOOR TYPES

SCALE: 1/4"=1'–0" AE601 D5

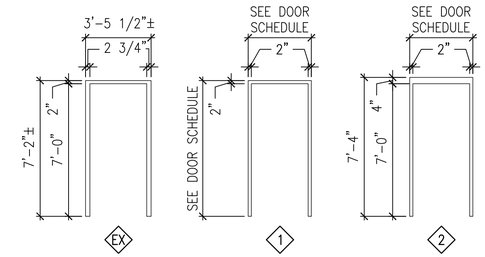

FRAME TYPES

SCALE: 1/4"=1'–0" AE601 C5

ROOM FINISH SCHEDULE

ROOM NUMBER	ROOM NAME	FLOOR	BASE	WALLS NORTH	WALLS EAST	WALLS SOUTH	WALLS WEST	CEILING	CEILING HEIGHT	NOTES
001	STAIR	CONC	–	CONC–P1	CONC–P1	CONC–P1	CONC–P1	CONC–P1	36'–6"±	A, B, D
002	STAIR	CONC	–	CONC–P1/GYP–P3	CONC–P1/GYP–P3	CONC–P1/GYP–P3	CONC–P1	GYP–P3	VARIES	A, B, D
S01A/B	SUMP LEVEL	CONC	–	CONC–P1	CONC–P1	CONC–P1	CONC–P1	CONC–P1	8'–0"±	A, B
101	LEVEL 1	CONC/GRATE–P2	–	CONC–P1	CONC–P1	CONC–P1	CONC–P1	CONC–P1	16'–0"±	A, B, C, D
201	LEVEL 2	CONC/GRATE–P2	–	CONC–P1	CONC–P1	CONC–P1	CONC–P1	CONC–P1	11'–6"±	A, B, C, D
301	OPERATING LEVEL	CONC/GRATE–P2	–	CONC/CMU–P1	CONC/CMU–P1	CONC/CMU–P1	CONC/CMU–P1	CONC–P1	14'–6"±	A, B, C, D

NOTES

A. BASE BID:
- FILL, PATCH, PAINT OR OTHERWISE REFINISH SURFACES DISTURBED BY DEMOLITION OR RELOCATIONS TO MATCH EXISTING TO THE NEXT CHANGE IN PLANE.
- PAINT PROVIDED CMU AND CONCRETE.
- PAINT ITEMS AS INDICATED.

B. OPTION 4 – PAINT INTERIOR CONCRETE WALL AND CEILING SURFACES.

C. DELETE GRATE PAINTING UNDER OPTION 2.

D. OPTION 4 – PROVIDE RESINOUS FLOORING.

FINISH SCHEDULE / COLOR KEY

MATERIAL	MANUFACTURER MODEL/TYPE	COLOR & FINISH	NOTES
METAL WALL PANEL	MORIN – CF SERIES PANELS – F 12 0	AS SELECTED	
METAL ROOF PANEL	MORIN – MORZIP 16	AS SELECTED	
DOOR / FRAME	CHASE – FIB–R–DOR	AS SELECTED	
FIBERGLASS GRATING	MCNICHOLS – MS S–200/MS S–150/MS S–100	AS SELECTED	
HANDRAILS AND GUARDRAILS	–	STAINLESS STEEL	
SPIRAL STAIR / RAILING	–	STAINLESS STEEL	
P1 – CONCRETE/MASONRY	SHERWIN WILLIAMS – PRO INDUSTRIAL PRE–CATALYZED WB EPOXY	AS SELECTED	
P2 – FLOOR GRATING	SHERWIN WILLIAMS – PRO INDUSTRIAL PRE–CATALYZED WB EPOXY	AS SELECTED	
P3 – GYPSUM BOARD	SHERWIN WILLIAMS – PRO INDUSTRIAL PRE–CATALYZED WB EPOXY	AS SELECTED	
P4 – METAL DOOR FRAME	SHERWIN WILLIAMS – PRO INDUSTRIAL PRE–CATALYZED WB EPOXY	AS SELECTED	
RESINOUS FLOORING	GENERAL POLYMERS RESINOUS FLOOR SYSTEM – BIO–FLAKE	BLEND 1	A

NOTES

A. RESINOUS FLAKE BLEND 1:
638 SILVER GRAY – 50%
621 BLUE – 30%
626 GREEN – 20%

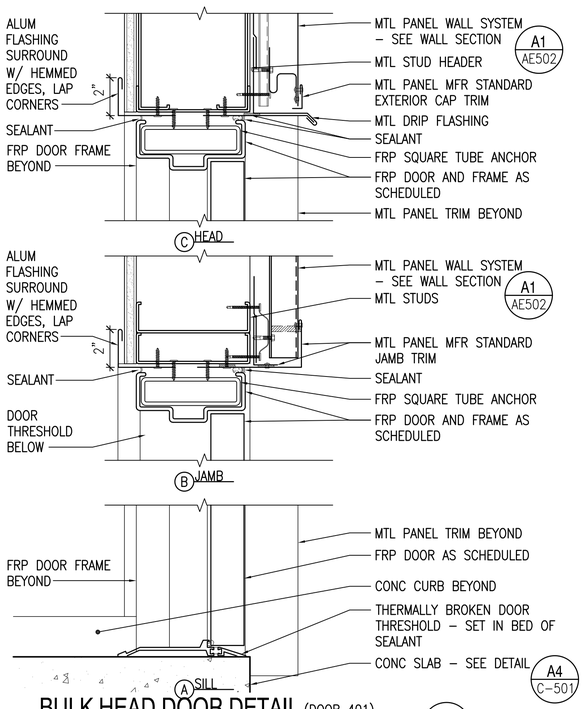

BULK HEAD DOOR DETAIL (DOOR 401)

SCALE: 3"=1'–0" AE601 A2

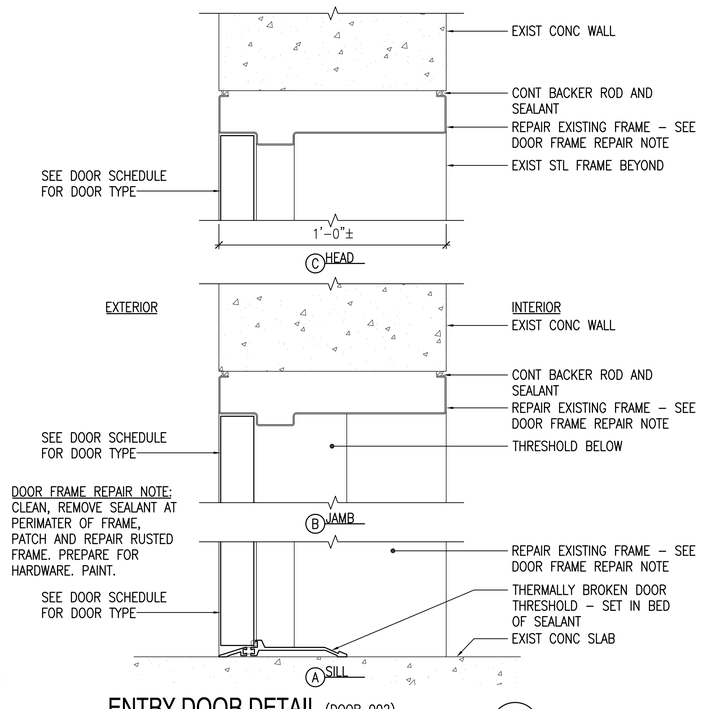

ENTRY DOOR DETAIL (DOOR 002)

SCALE: 3"=1'–0" AE601 A3

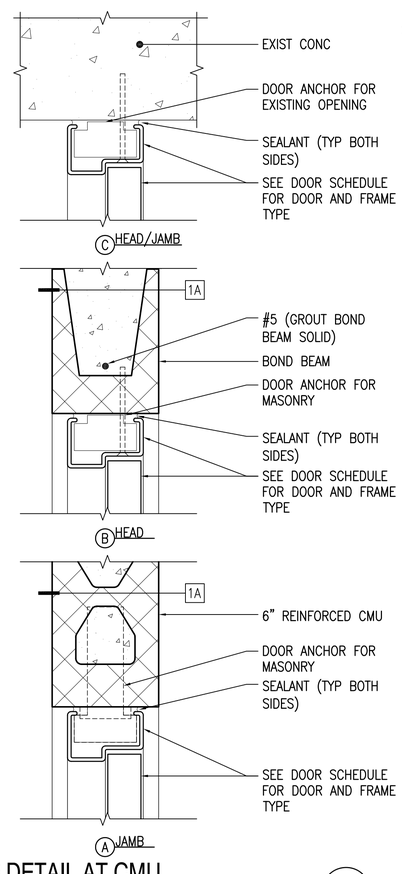

DOOR DETAIL AT CMU

SCALE: 3"=1'–0" AE601 A4

GENERAL SHEET NOTES

1. SEE SHEET AE503 FOR WALL TYPES.
2. FILL, PATCH, PAINT OR OTHERWISE REFINISH SURFACES DISTURBED BY DEMOLITION OR RELOCATIONS TO MATCH EXISTING TO THE NEXT CHANGE IN PLANE.
3. FILL, PATCH AND PAINT HOLES ON SURFACES WHERE CONDUIT AND PIPES ARE REMOVED.

GRAPHIC SCALES

1/4"=1'–0" 4' 2' 0 4' 8'

3"=1'–0" 6" 4" 2" 0 1'

CHECK GRAPHIC SCALES BEFORE USING

PFD	JAN 07, 2015	FINAL SUBMISSION		APPR.
				DATE
				DESCRIPTION
				SYM

NAVFAC

LICENSED ARCHITECT KIMBERLY A. WESTON No. 3794 STATE OF MAINE 01/07/15

OAK POINT ASSOCIATES

A/E INFO

APPROVED

FOR COMMANDER NAVFAC

ACTIVITY

SEE G–001 FOR DDCB BLOCK

SATISFACTORY TO DATE 01/07/15

DES KTW DRW JMR CHK PFD

PM/DM R C PANTEL

BRANCH MANAGER AMIN BAHROUR

CHIEF ENG/ARCH LCDR J ROCHE

FIRE PROTECTION P BAKAJ

DEPARTMENT OF THE NAVY
NAVAL FACILITIES ENGINEERING COMMAND
PWD–MAINE
NAVAL SHIPYARD

NAVAL FACILITIES ENGINEERING COMMAND ~ MID–ATLANTIC
PORTSMOUTH NAVAL SHIPYARD ~ KITTERY, ME
KITTERY, ME

DRY DOCK #3 PUMP WELL REPAIRS

DOOR SCHEDULE, DOOR TYPES AND DETAILS

MAXIMO No:

EPROJECT NO.: 1332591

CONSTR. CONTR. NO. N40085–15–C–6109

NAVFAC DRAWING NO. 12686308

SHEET 40 OF 66

AE601 DD3-14-699

DRAWFORM REVISION: 10 MARCH 2009

21 Jan, 2015 – 1:25pm
C:\DFile\21105.16–AE601.dwg