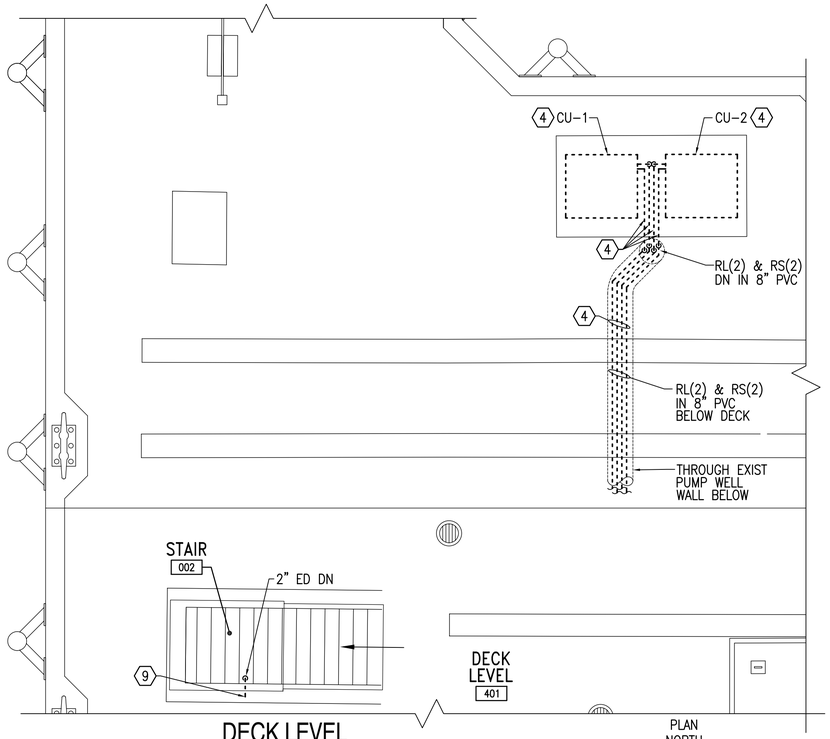

DECK LEVEL MECHANICAL REMOVALS PLAN

SCALE: 1/4"=1'-0"

PLAN NORTH

CD101

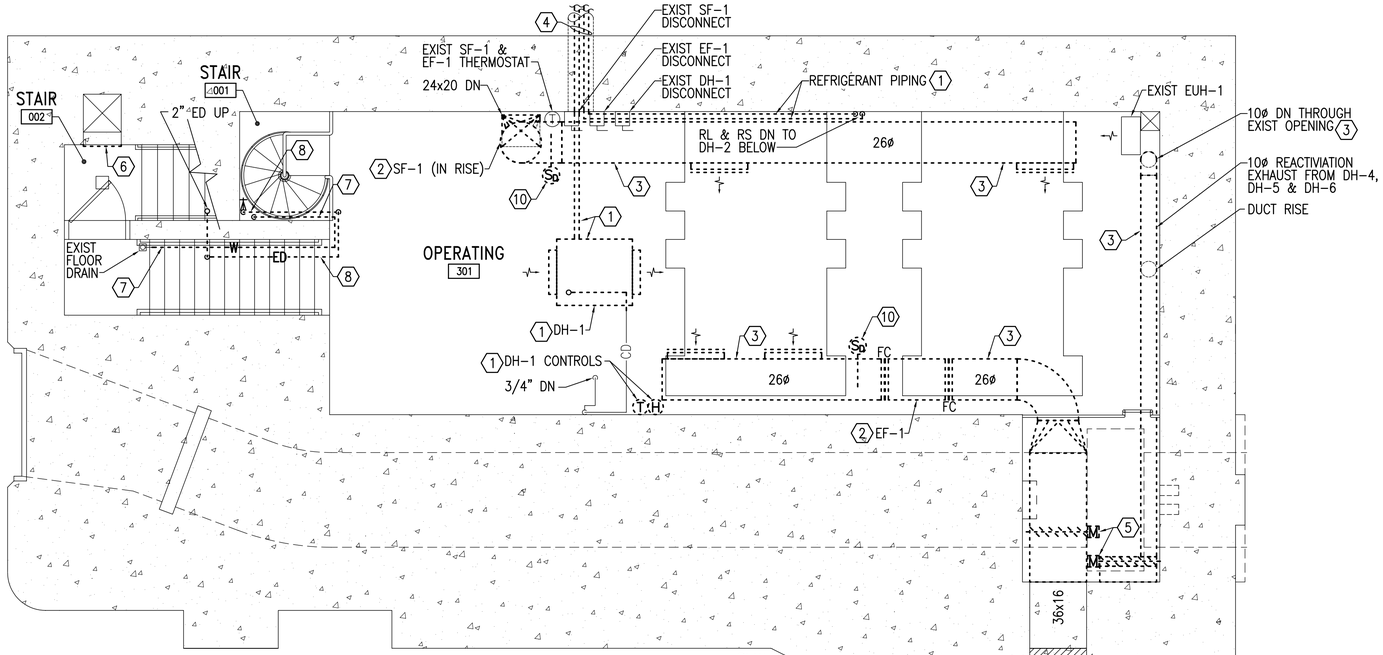

OPERATING LEVEL MECHANICAL REMOVALS PLAN

SCALE: 1/4"=1'-0"

PLAN NORTH

MECHANICAL SYMBOLS LEGEND

ANNOTATION

- H 2 — SYMBOL PER ABBREVIATION LIST; EQUIPMENT SEQUENCE NUMBER
- S-1 100 — AIR INLET OR OUTLET WITH CFM
- 1 — KEYNOTE
- DIRECTION OF AIR FLOW
- CONNECT TO EXISTING
- SUPPLY DIFFUSER/REGISTER/GRILLE
- EXHAUST GRILLE/REGISTER
- SIDEWALL REGISTER/GRILLE
- DUCT
- FLEXIBLE CONNECTION
- RECTANGULAR TO ROUND FITTING
- EXHAUST DUCT UP
- SUPPLY DUCT UP
- SQUARE ELBOW WITH TURNING VANES
- VD — VOLUME DAMPER
- BDD — BACKDRAFT DAMPER
- M — MOTORIZED DAMPER, PARALLEL BLADE
- SD — DUCT MOUNTED SMOKE DETECTOR

EQUIPMENT

- UNIT HEATER

PIPING

- ELBOW DOWN
- PIPE TEE UP OR UP AND DOWN
- ELBOW UP OR UP AND DOWN
- GATE VALVE IN VERTICAL
- CAP
- CLEANOUT
- FLOOR DRAIN

CONTROLS AND METERING

- T — WALL MOUNTED THERMOSTAT WITH INTEGRAL CONTACTORS, USER-ADJUSTABLE
- H — WALL MOUNTED THERMOSTAT
- SD — DUCT MOUNTED SMOKE DETECTOR

ELECTRICAL

- J — JUNCTION BOX
- $ — MANUAL SWITCH
- DISCONNECT SWITCH

MECHANICAL ABBREVIATIONS

∠	ANGLE	IN	INCHES
@	AT	KW	KILOWATT
±	PLUS OR MINUS	L	LOUVER, LENGTH
AFF	ABOVE FINISHED FLOOR	LAT	LEAVING AIR TEMPERATURE
BDD	BACKDRAFT DAMPER	LBS	POUNDS
CC	COOLING COIL	LRA	LOCKED ROTOR AMPS
CD	CONDENSATE DRAIN	MAX	MAXIMUM
CFM	CUBIC FEET/MINUTE	MBH	1000 BTU PER HOUR
CONC	CONCRETE	MCA	MINIMUM CIRCUIT AMPERES
COND	CONDENSATE, CONDITIONS, CONDENSING	MECH	MECHANICAL
CU	CONDENSING UNIT	MIN	MINIMUM
D	DEPTH, DAMPER, DRAIN	NO	NUMBER, NORMALLY OPEN
DB	DRY BULB	OA	OUTSIDE AIR
dB	DECIBELS	OS&Y	OUTSIDE STEM AND YOKE
DEG	DEGREES	PP-R	POLYPROPYLENE RANDOM
DF	DESTRATIFICATION FAN	PVC	POLY VINYL CHLORIDE
DH	DEHUMIDIFIER	QTY	QUANTITY
ø,DIA	DIAMETER	REFRIG	REFRIGERANT
DISCH	DISCHARGE	RH	RELATIVE HUMIDITY, RANGE HOOD
DN	DOWN	RL	REFRIGERANT LIQUID
E	EXISTING, EXHAUST	RLA	RUNNING LOAD AMPERES
EA	EXHAUST AIR, EACH	RPM	REVOLUTIONS PER MINUTE
EAT	ENTERING AIR TEMPERATURE	RS	REFRIGERANT SUCTION
ED	EXHAUST DAMPER, EMERGENCY DRAIN	S	SUPPLY
EDH	ELECTRIC DUCT HEATER	SC	SENSIBLE COOLING
EER	ENERGY EFFICIENCY RATIO	SD	SUPPLY DAMPER, SMOKE DETECTOR
EF	EXHAUST FAN	SDR	STANDARD DIMENSION RATIO
ELEV,EL	ELEVATION, ELEVATOR	SF	SQUARE FOOT, SUPPLY FAN
ESP	EXTERNAL STATIC PRESSURE	SMACNA	SHEET METAL AND AIR CONDITIONING CONTRACTORS' NATIONAL ASSOCIATION
ETC	ET CETERA		
EUH	ELECTRIC UNIT HEATER	SS	STAINLESS STEEL
EXIST	EXISTING	TC	TOTAL COOLING
°F	DEGREES FAHRENHEIT	TEMP	TEMPERATURE
FC	FLEX CONNECTOR, FAN COIL	TYP	TYPICAL
FLA	FULL LOAD AMPS	V	VENT, VALVE, VOLTS
FT	FOOT/FEET	VD	VOLUME DAMPER
HP	HORSEPOWER	W	WIDTH, WIDE, WASTE
HR	HOUR	W/	WITH
HSS	HOLLOW STRUCTURAL SECTION	WC	WATER COLUMN

MECHANICAL LINE TYPE LEGEND

- REMOVE ITEMS
- EXIST ITEMS TO REMAIN
- PROVIDE ITEMS
- RL — REFRIGERANT LIQUID
- RS — REFRIGERANT SUCTION
- CD — CONDENSATE DRAIN
- W — WASTE PIPE
- D — DRAIN
- ED — EMERGENCY DRAIN
- CONTROL WIRING

GENERAL SHEET NOTE

1. REFER TO SEQUENCING NOTES ON SHEET G-003 FOR ITEMS AFFECTING MECHANICAL WORK.

REMOVALS KEYNOTES

1. REMOVE DEHUMIDIFIER AND ASSOCIATED PIPING, ACCESSORIES, ETC. REFRIGERANT SHALL BE RECLAIMED AND HANDLED BY A LICENSED REFRIGERATION MECHANIC IN ACCORDANCE WITH FEDERAL, STATE AND LOCAL REQUIREMENTS.
2. REMOVE FAN. EXISTING THERMOSTAT AND CONTROLS TO REMAIN.
3. REMOVE DUCTWORK, FITTINGS, DIFFUSERS, GRILLES, ETC.
4. REMOVE CONDENSER UNIT AND ASSOCIATED PIPING, ETC. PIPING EXTENDS TO CONDENSER UNITS ON THE DECK LEVEL.
5. REMOVE DAMPER AND ACTUATOR. CONTROL WIRING FOR DAMPER SHALL REMAIN.
6. REMOVE 26x38 METAL INTAKE GRATE. CLEAN AND PAINT FOR REINSTALLATION.
7. REMOVE 2" WASTE LINE FROM FD AT NO-HUB COUPLING.
8. REMOVE 2" EMERGENCY DRAIN LINE.
9. REMOVE OPEN ENDED EMERGENCY DRAIN LINE THROUGH BULKHEAD WALL.
10. REMOVE SMOKE DETECTOR. CONTROL WIRING SHALL REMAIN.

GRAPHIC SCALE

1/4"=1'-0" 4' 2' 0 4' 8'

CHECK GRAPHIC SCALE BEFORE USING

PFD								APPR.
JAN 07, 2015								DATE
FINAL SUBMISSION								DESCRIPTION
								SYM

NAVFAC

STATE OF MAINE MATTHEW S. ALBERT No. 9235 LICENSED PROFESSIONAL ENGINEER 1-9-15

OAK POINT ASSOCIATES
ARCHITECTURE • ENGINEERING • PLANNING
A/E INFO

APPROVED

FOR COMMANDER NAVFAC

ACTIVITY

SEE G-001 FOR DDCB BLOCK

SATISFACTORY TO DATE 01/07/15

DES SMC | DRW RDA | CHK MSA

PM/DM R C PANTEL

BRANCH MANAGER AMIN BAHROUR

CHIEF ENG/ARCH LCDR J ROCHE

FIRE PROTECTION P BAKAJ

DEPARTMENT OF THE NAVY
NAVAL FACILITIES ENGINEERING COMMAND
PWD-MAINE
NAVAL FACILITIES ENGINEERING COMMAND ~ MID-ATLANTIC
PORTSMOUTH NAVAL SHIPYARD ~ KITTERY, ME
NAVAL SHIPYARD
KITTERY, ME

DRY DOCK #3 PUMP WELL REPAIRS

DECK LEVEL AND OPERATING LEVEL MECHANICAL REMOVALS PLANS, MECHANICAL LEGENDS AND ABBREVIATIONS

MAXIMO No:

EPROJECT NO.: 1332591

CONSTR. CONTR. NO. N40085-15-C-6109

NAVFAC DRAWING NO. 12686309

SHEET 41 OF 66

MD101 | DD3-14-700

DRAWFORM REVISION: 10 MARCH 2009

09 Jan, 2015 - 10:52am
C:\dfile\21105.16-MD101.dwg

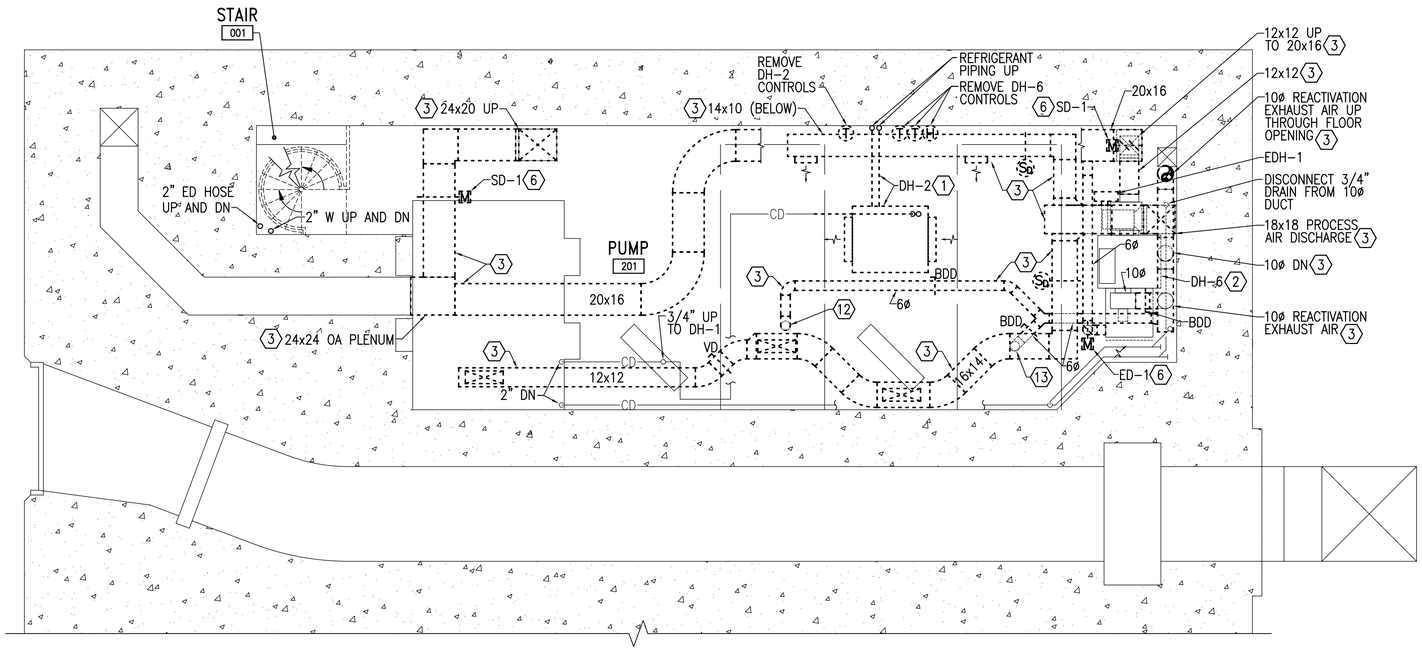

LEVEL 2 MECHANICAL REMOVALS PLAN

SCALE: 1/4"=1'-0"

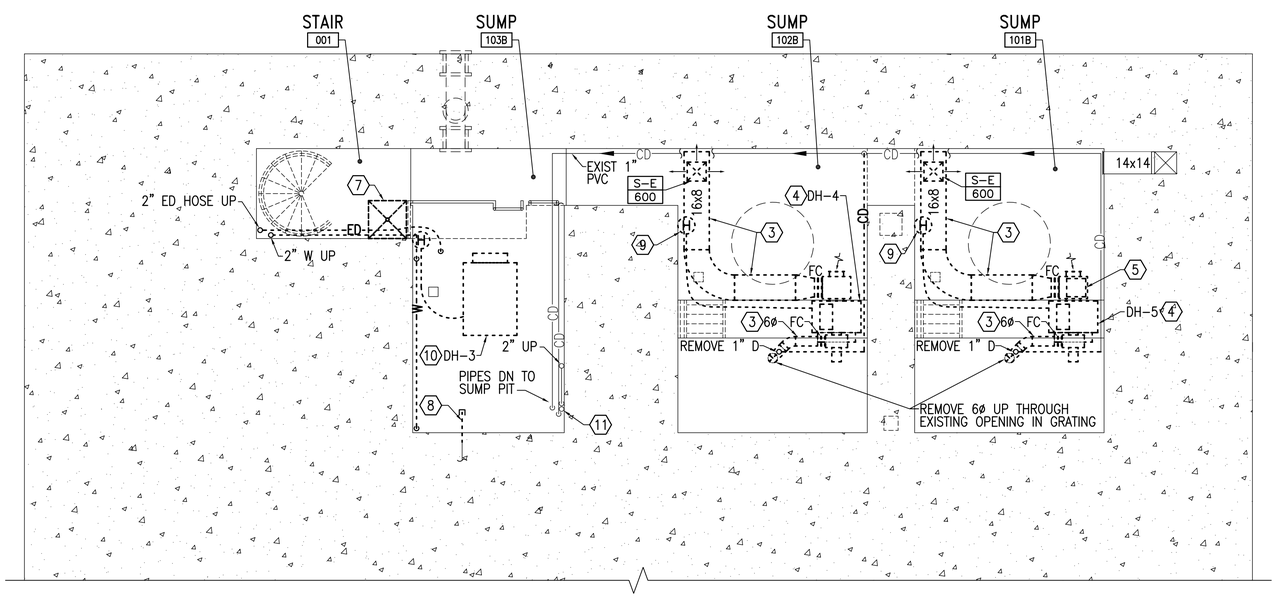

LEVEL 1 MECHANICAL REMOVALS PLAN

SCALE: 1/4"=1'-0"

GENERAL SHEET NOTE

1. REFER TO SEQUENCING NOTES ON SHEET G-003 FOR ITEMS AFFECTING MECHANICAL WORK.

REMOVALS KEYNOTES

1. REMOVE DEHUMIDIFIER AND ASSOCIATED PIPING, CONTROLS, ACCESSORIES, ETC.
2. EXISTING DEHUMIDIFIER DH-6 TO REMAIN. DH-6 SHALL BE RENAMED DH-3.
3. REMOVE DUCTWORK, FITTINGS, DIFFUSERS, GRILLES, ETC.
4. EXISTING DEHUMIDIFIER SHALL BE REMOVED AND STORED FOR RELOCATION.
5. REMOVE CORRODED PROCESS FAN MOTOR AND ASSOCIATED COUPLINGS.
6. CONTROL WIRING FOR DAMPER SHALL REMAIN.
7. REMOVE STAINLESS STEEL SAMPLING SINK. REMOVE ASSOCIATED SUPPLY PIPING BACK TO 12" DRAINAGE MAIN. REMOVE SINK DRAIN PIPING BACK TO SUMP BELOW.
8. REMOVE ABANDONED PIPE TO 6 INCHES PAST SURFACE OF WALL. VERIFY PIPE IS NOT PRESSUREIZED PRIOR TO CUTTING. CAP PIPE AND REPAIR WALL. REFER TO DETAIL D5/AE502 FOR WALL REPAIR.
9. DEHUMIDIFIER CONTROLS SHALL BE REMOVED.
10. REMOVE DEHUMIDIFIER AND ASSOCIATED CONTROLS, ACCESSORIES, ETC.
11. 2" CD UP AND DN TO SUMP PIT SHALL REMAIN.
12. REMOVE 6Ø DOWN TO DH-4.
13. REMOVE 6Ø DOWN TO DH-5.

GRAPHIC SCALE

1/4"=1'-0" 4' 2' 0 4' 8'

CHECK GRAPHIC SCALE BEFORE USING

SYM	DESCRIPTION	DATE	APPR
FINAL SUBMISSION		JAN 07, 2015	PFD

NAVFAC

STATE OF MAINE MATTHEW S. ALBERT No. 9235 LICENSED PROFESSIONAL ENGINEER 1-9-15

OAK POINT ASSOCIATES
ARCHITECTURE • ENGINEERING • PLANNING
A/E INFO

APPROVED

FOR COMMANDER NAVFAC

ACTIVITY: SEE G-001 FOR DDCB BLOCK

SATISFACTORY TO DATE 01/07/15

DES SMC DRW KLG CHK MSA

PM/DM R C PANTEL

BRANCH MANAGER AMIN BAHROUR

CHIEF ENG/ARCH LCDR J ROCHE

FIRE PROTECTION P BAKAJ

DEPARTMENT OF THE NAVY
NAVAL FACILITIES ENGINEERING COMMAND
PWD-MAINE
NAVAL FACILITIES ENGINEERING COMMAND ~ MID-ATLANTIC
NAVAL SHIPYARD PORTSMOUTH NAVAL SHIPYARD ~ KITTERY, ME
KITTERY, ME

DRY DOCK #3 PUMP WELL REPAIRS

LEVEL 1 AND LEVEL 2 MECHANICAL REMOVALS PLANS

MAXIMO No:

EPROJECT NO.: 1332591

CONSTR. CONTR. NO. N40085-15-C-6109

NAVFAC DRAWING NO. 12686310

SHEET 42 OF 66

MD102 DD3-14-701

DRAWFORM REVISION: 10 MARCH 2009

09 Jan, 2015 - 10:57am
C:\dfile\21105.16-MD102.dwg

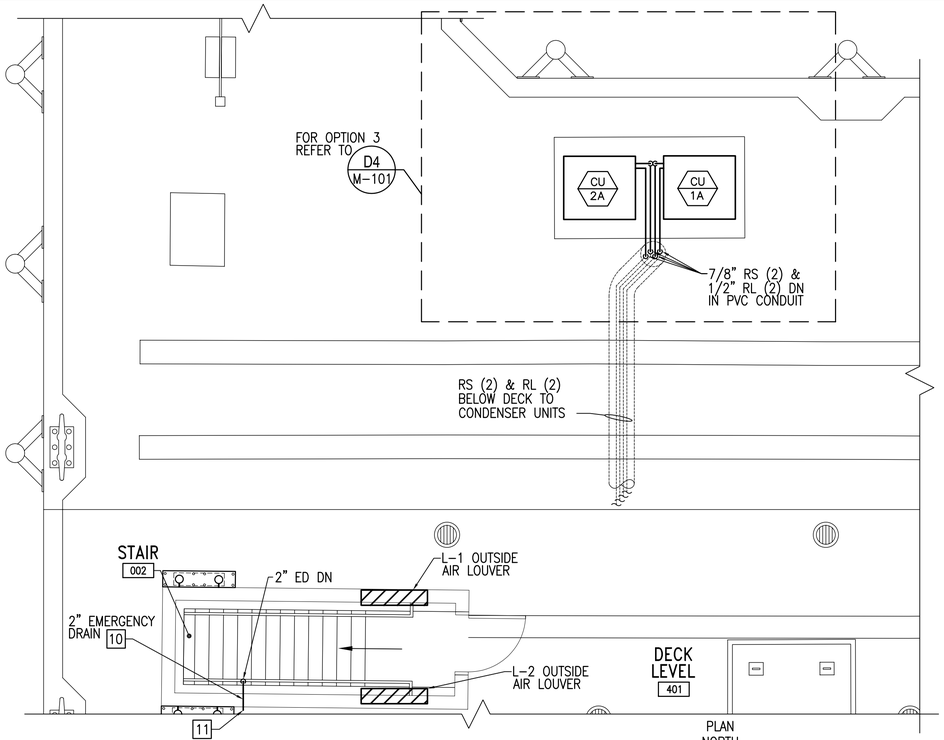

DECK LEVEL MECHANICAL PLAN

SCALE: 1/4"=1'-0" C-101

PLAN NORTH

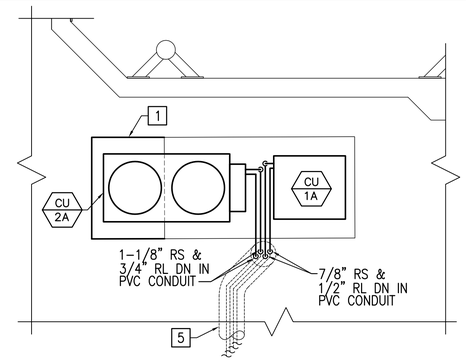

OPTION 3 - DECK LEVEL MECHANICAL PLAN

SCALE: 1/4"=1'-0" M-101 D4

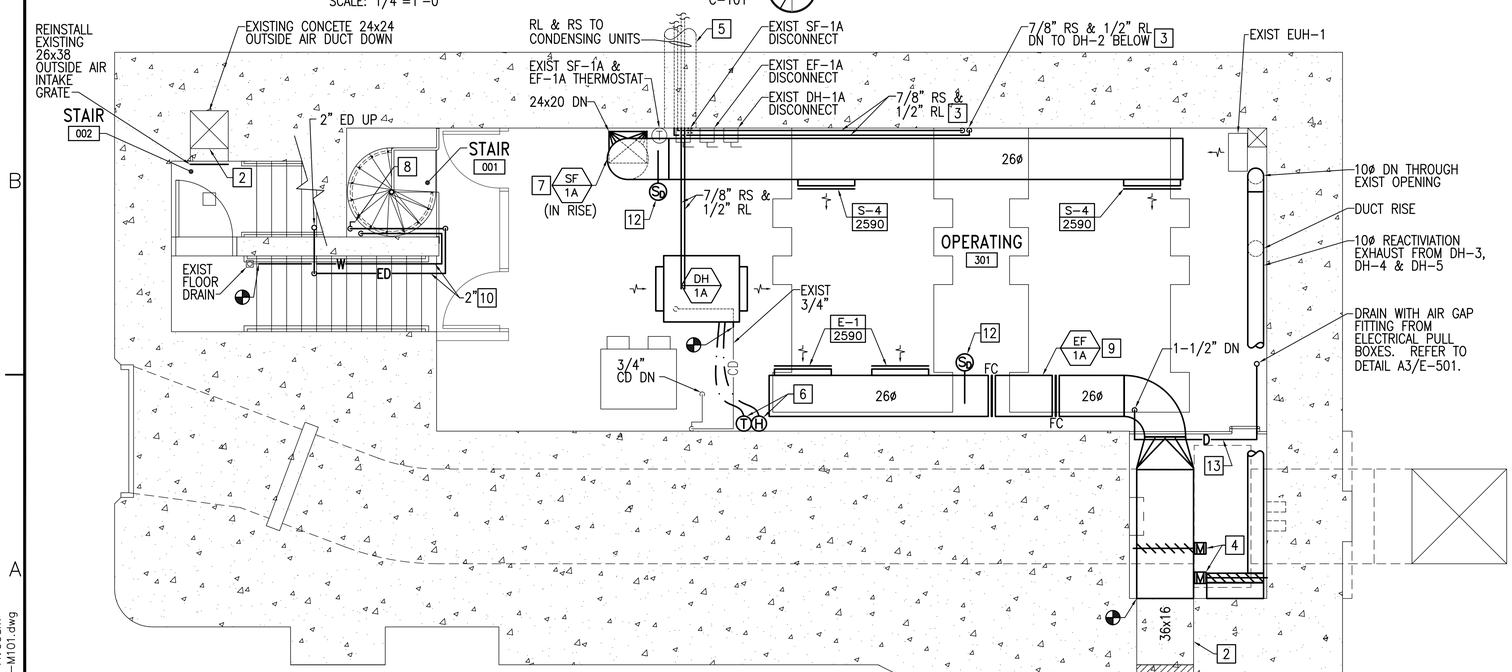

OPERATING LEVEL MECHANICAL PLAN

SCALE: 1/4"=1'-0"

PLAN NORTH

GENERAL SHEET NOTE

1. REFER TO SEQUENCING NOTES ON SHEET G-003 FOR ITEMS AFFECTING MECHANICAL WORK.

KEYNOTES

1. OPTION 3 ONLY – CONCRETE EQUIPMENT PAD. REFER TO DETAIL A2/C-501.
2. CLEAN SURFACES OF EXISTING CONCRETE AIR DUCT IN ACCORDANCE WITH THE CURRENT PUBLISHED STANDARDS OF THE NATIONAL AIR DUCT CLEANERS ASSOCIATION (NADCA).
3. UNDER OPTION 3 ONLY – THIS PIPING SHALL BE 1-1/8" RS & 3/4" RL
4. CONNECT DAMPER TO EXISTING CONTROL WIRING.
5. UNDER OPTION 3 THE EXISTING 8" PVC THROUGH SLAB SHALL BE REPLACED WITH 12" PVC TO ACCOMODATE THE LARGER RL & RS PIPING FOR CU-2A. REFER TO DETAIL A3/C-502.
6. THERMOSTAT AND HUMIDISTAT FOR DH-1A.
7. MOUNT FAN TO WALL. PROVIDE DUCT TRANSITION FROM 24x20 THROUGH FLOOR TO SF-1A INLET. PROVIDE FLEX CONNECTIONS AT INLET AND DISCHARGE DUCT CONNECTIONS. CONNECT FAN TO EXISTING CONTROLS.
8. PROVIDE BALL VALVE IN VERTICAL. LOCATE NEXT TO HANDRAIL ON STAIRS.
9. CONNECT FAN TO EXISTING CONTROLS.
10. PROVIDE 316 STAINLESS STEEL PIPING WITH WELDED STAINLESS STEEL FITTINGS.
11. 2" OPEN ENDED EMERGENCY DRAIN THROUGH BULKHEAD WALL.
12. CONNECT SMOKE DETECTOR TO EXISTING CONTROL WIRING.
13. 1-1/2" DRAIN UNDER EXISTING RAISED PLATFORM.

GRAPHIC SCALE

1/4"=1'-0" 4' 2' 0 4' 8'

CHECK GRAPHIC SCALE BEFORE USING

SYM	DESCRIPTION	DATE	APPR.
FINAL SUBMISSION		JAN 07, 2015	PFD

NAVFAC

STATE OF MAINE MATTHEW S. ALBERT No. 9235 LICENSED PROFESSIONAL ENGINEER 1-9-15

OAK POINT ASSOCIATES ARCHITECTURE • ENGINEERING • PLANNING

A/E INFO

APPROVED

FOR COMMANDER NAVFAC

ACTIVITY

SEE G-001 FOR DDCB BLOCK

SATISFACTORY TO DATE 01/07/15

DES SMC DRW RDA CHK MSA

PM/DM R C PANTEL

BRANCH MANAGER AMIN BAHROUR

CHIEF ENG/ARCH LCDR J ROCHE

FIRE PROTECTION P BAKAJ

DEPARTMENT OF THE NAVY
NAVAL FACILITIES ENGINEERING COMMAND
PWD-MAINE

NAVAL FACILITIES ENGINEERING COMMAND ~ MID-ATLANTIC
PORTSMOUTH NAVAL SHIPYARD ~ KITTERY, ME

NAVAL SHIPYARD KITTERY, ME

DRY DOCK #3 PUMP WELL REPAIRS

DECK LEVEL AND OPERATING LEVEL MECHANICAL PLANS

MAXIMO No:

EPROJECT NO.: 1332591

CONSTR. CONTR. NO. N40085-15-C-6109

NAVFAC DRAWING NO. 12686311

SHEET 43 OF 66

M-101 DD3-14-702

DRAWFORM REVISION: 10 MARCH 2009

09 Jan, 2015 – 11:00am
C:\dfile\21105.16-M101.dwg

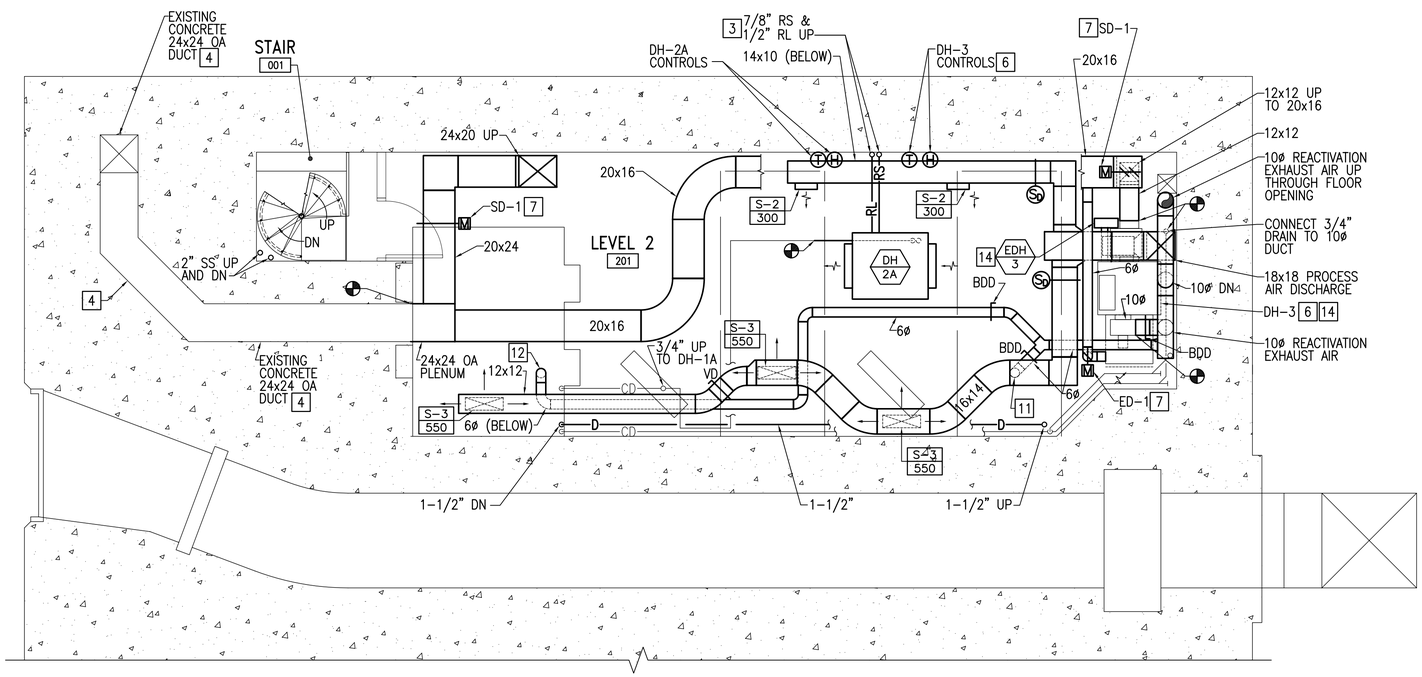

LEVEL 2 MECHANICAL PLAN

SCALE: 1/4"=1'-0"

PLAN NORTH

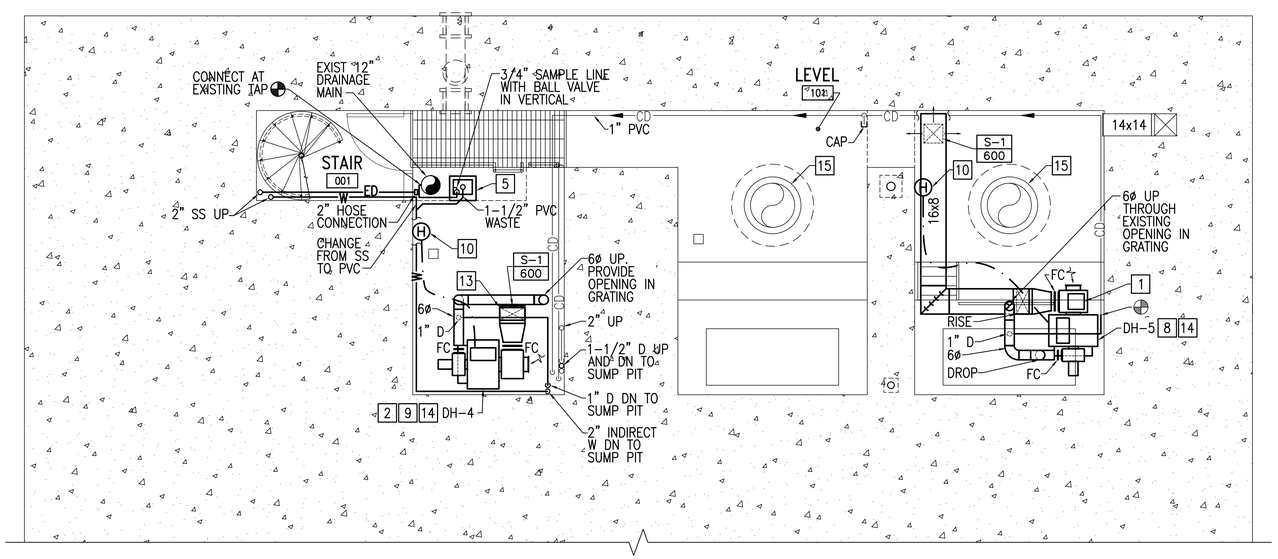

LEVEL 1 MECHANICAL PLAN

SCALE: 1/4"=1'-0"

PLAN NORTH

GENERAL SHEET NOTE

1. REFER TO SEQUENCING NOTES ON SHEET G-003 FOR ITEMS AFFECTING MECHANICAL WORK.

KEYNOTES

1. PROVIDE REPLACEMENT PROCESS FAN MOTOR FOR DH-5. REFER TO SCHEDULE ON SHEET M-601 FOR HUMIDIFIER MANUFACTURER, MODEL AND SERIAL NUMBER.
2. CLEAN EXTERIOR AND INTERIOR OF DH-4. DISASSEMBLE AND REASSEMBLE UNIT AS NEEDED TO REMOVE SALT BUILD-UP.
3. UNDER OPTION 3 ONLY – THIS PIPING SHALL BE 1-1/8" RS & 3/4" RL.
4. CLEAN SURFACES OF EXISTING CONCRETE OUTSIDE AIR DUCT IN ACCORDANCE WITH THE CURRENT PUBLISHED STANDARDS OF THE NATIONAL AIR DUCTS CLEANING ASSOCIATION (NADCA).
5. STAINLESS STEEL SAMPLING SINK. MOUNT TO EXISTING MEZZANINE STRUCTURE WITH MANUFACTURER'S WALL HANGER AT APPROXIMATELY 4'-0" AFF. VERIFY LOCATION WITH CONTRACTING OFFICER. BASIS OF DESIGN – ELKAY CHSB17162 HAND SINK OR APPROVED EQUAL.
6. EXISTING DEHUMIDIFIER DH-6 SHALL BE RELABELED AS DH-3.
7. CONNECT DAMPER TO EXISTING CONTROL WIRING.
8. RELOCATE DH-5 ONTO EXISTING ELEVATED CONCRETE PLATFORM.
9. RELOCATE DH-4 ONTO EXISITNG STEEL GRATE MEZZANINE "A" ABOVE.
10. PROVIDE HUMIDISTAT AND CONTROL WIRING FOR DEHUMIDIFIER.
11. 6ø REACTIVATION EXHAUST AIR DN THROUGH EXISTING HOLE IN GRATING.
12. 6ø REACTIVATION EXHAUST AIR DN. PROVIDE HOLE IN GRATING.
13. 16x8 SUPPLY DUCT DOWN THROUGH GRATING TO 36" ABOVE PIT FLOOR. PROVIDE HOLE IN GRATING. SUPPLY DIFFUSER SHALL BE MOUNTED ON VERTICAL FACE OF DUCT FACING NORTH NEAR THE BOTTOM OF THE DUCT.
14. PROVIDE STAINLESS STEEL EQUIPMENT SHEILD. REFER TO DETAIL A4/AE503.
15. PROVIDE OVERHAUL AND REFURBISHMENT SERVICE FOR EXISTING MAIN DEWATERING PUMP. REFER TO SPECIFICATION 43 21 39.00 20 OVERHAUL AND REFURBISHMENT OF EXISTING VERTICAL TURBINE MAIN DEWATERING PUMPS.

GRAPHIC SCALE

1/4"=1'-0" 4' 2' 0 4' 8'

CHECK GRAPHIC SCALE BEFORE USING

PFD			APPR
JAN 07, 2015			DATE
FINAL SUBMISSION			DESCRIPTION
			SYM

NAVFAC

STATE OF MAINE MATTHEW S. ALBERT No. 9235 LICENSED PROFESSIONAL ENGINEER 1-9-15

OAK POINT ASSOCIATES ARCHITECTURE • ENGINEERING • PLANNING

A/E INFO

APPROVED

FOR COMMANDER NAVFAC

ACTIVITY

SEE G-001 FOR DDCB BLOCK

SATISFACTORY TO DATE 01/07/15

DES SMC DRW KLG CHK MSA

PM/DM R C PANTEL

BRANCH MANAGER AMIN BAHROUR

CHIEF ENG/ARCH LCDR J ROCHE

FIRE PROTECTION P BAKAJ

DEPARTMENT OF THE NAVY
NAVAL FACILITIES ENGINEERING COMMAND
PWD-MAINE
NAVAL FACILITIES ENGINEERING COMMAND ~ MID-ATLANTIC
PORTSMOUTH NAVAL SHIPYARD ~ KITTERY, ME
NAVAL SHIPYARD KITTERY, ME

DRY DOCK #3 PUMP WELL REPAIRS

LEVEL 1 AND LEVEL 2 MECHANICAL PLANS

MAXIMO No:

EPROJECT NO.: 1332591

CONSTR. CONTR. NO. N40085-15-C-6109

NAVFAC DRAWING NO. 12686312

SHEET 44 OF 66

M-102 DD3-14-703

DRAWFORM REVISION: 10 MARCH 2009

09 Jan, 2015 – 11:02am
C:\dfile\21105.16-M102.dwg

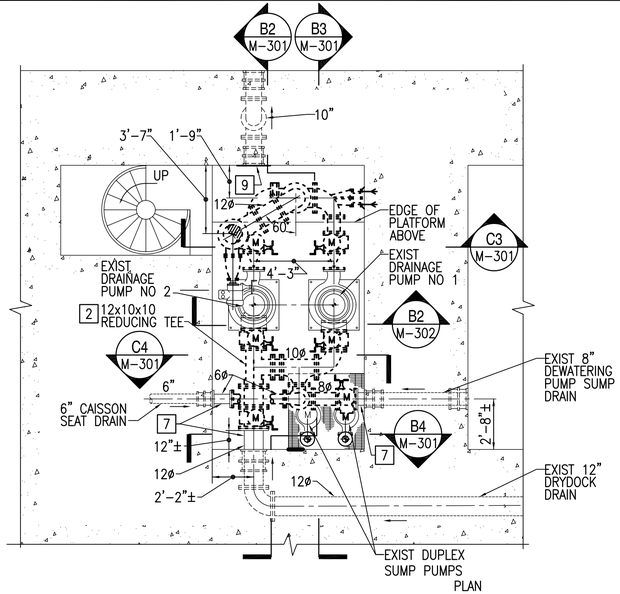

DRAINAGE PUMP PIT PART PLAN

SCALE: 1/4"=1'-0"

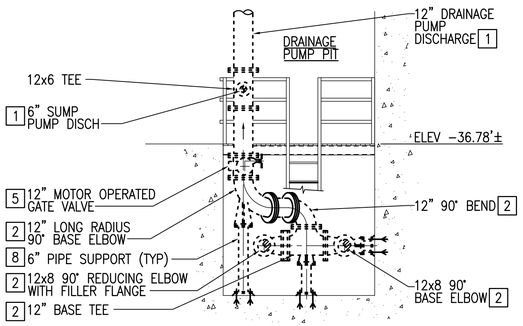

SECTION C3

SCALE: 1/4"=1'-0"

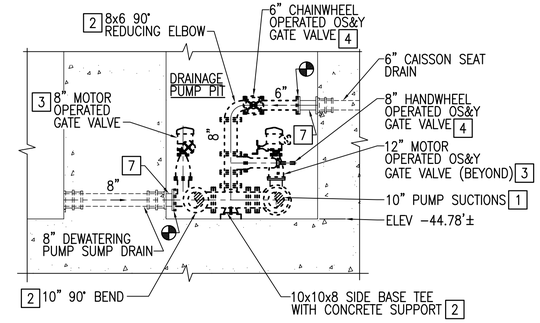

SECTION C4

SCALE: 1/4"=1'-0"

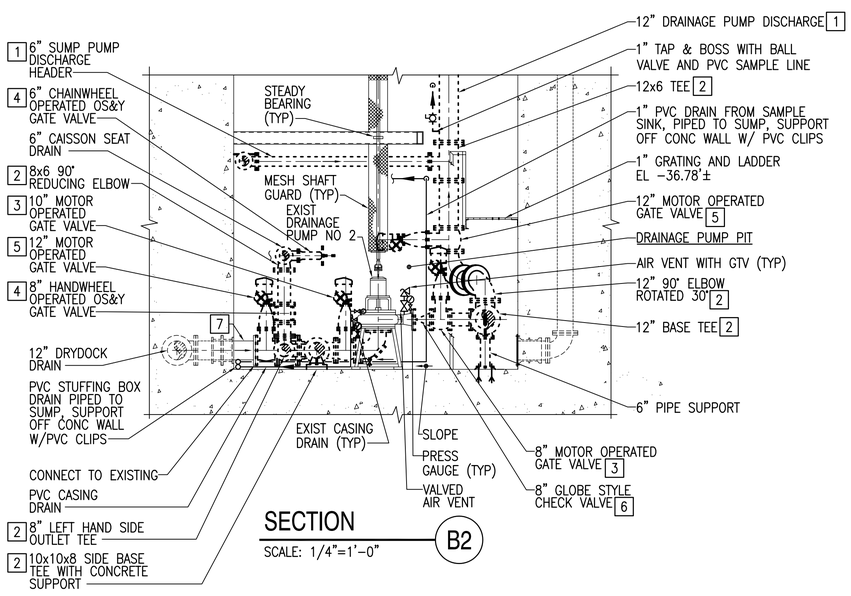

SECTION B2

SCALE: 1/4"=1'-0"

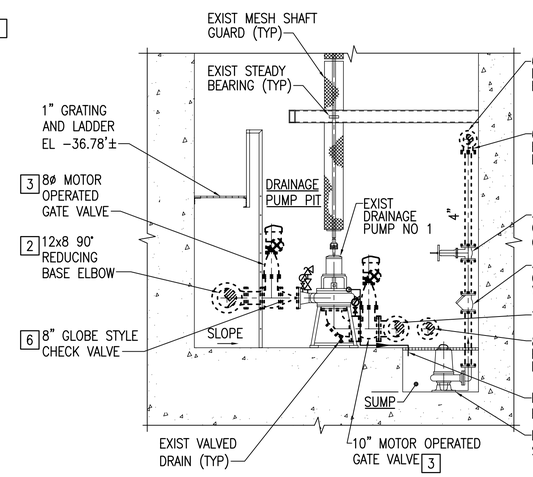

SECTION B3

SCALE: 1/4"=1'-0"

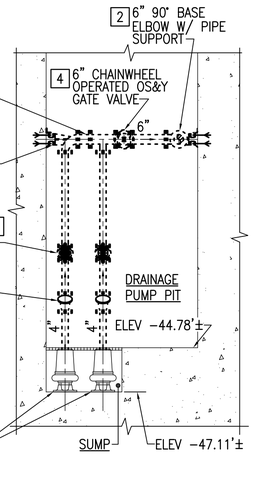

SECTION B4

SCALE: 1/4"=1'-0"

GENERAL SHEET NOTES

1. REFER TO SEQUENCING NOTES ON SHEET G-003 FOR ITEMS AFFECTING MECHANICAL WORK.
2. PROVIDE TWO TEMPORARY DRAINAGE PUMPS (TDP-1 AND TDP-2) FOR WORK UNDER OPTION 1. PUMPS SHALL BE BASIS OF DESIGN AS SCHEDULED ON SHEET M-601 OR APPROVED EQUIVALENT. PROVIDE TWO 50 FOOT LONG 8" RUBBER DISCHARGE HOSES WITH BASIS OF DESIGN BAUER QUICK DISCONNECT (QD) FITTINGS OR APPROVED EQUIVALENT. HOSES SHALL BE BASIS OF DESIGN HOSECRAFT MODEL RN1 RATED FOR 100 PSIG OR APPROVED EQUIVALENT. PROVIDE 240 LINEAR FEET OF 8" GALVANIZED PIPING WITH QD FITTINGS. PROVIDE TWO 8" GALVANIZED ELBOWS WITH QD FITTINGS. VERIFY HOSE AND PIPE LENGTHS WITH CONTRACTING OFFICER. TEMPORARY DRAINAGE PUMPS, HOSES AND PIPING SHALL BE TURNED OVER TO THE NAVY AT THE END OF THE CONTRACT.

KEYNOTES (THIS SHEET ONLY)

1. REMOVE EXISTING DUCTILE IRON DRAINAGE PIPE AND REPLACE WITH PP-R PIPE (SDR 11).
2. REMOVE EXISTING DUCTILE IRON DRAINAGE FITTING AND REPLACE WITH PP-R FITTING.
3. REMOVE EXISTING CAST-IRON MOTOR OPERATED VALVE AND REPLACE WITH STAINLESS STEEL MANUALLY OPERATED VALVE. PROVIDE END SWITCH ON VALVE INDICATING CLOSED POSITION.
4. REMOVE EXISTING CAST-IRON VALVE AND REPLACE WITH STAINLESS STEEL VALVE.
5. REMOVE EXISTING CAST-IRON MOTOR OPERATED VALVE AND REPLACE WITH STAINLESS STEEL MOTOR OPERATED VALVE.
6. REMOVE EXISTING CAST-IRON GLOBE STYLE CHECK VALVE AND REPLACE WITH STAINLESS STEEL WAFER STYLE CHECK VALVE.
7. PROVIDE PIPING RE-INFORCEMENT SYSTEM ON EXTERIOR OF EXPOSED EXISTING PIPE TO REMAIN, BASIS OF DESIGN "ENECON, METALCLAD, DURA-WRAP" OR APPROVED EQUIVALENT. INSTALL RE-INFORCEMENT SYSTEM IN ACCORDANCE WITH MANUFACTURER'S WRITTEN INSTRUCTIONS.
8. REPLACE PIPE SUPPORTS WITH PP-R MANUFACTURER'S PIPE SUPPORT SYSTEM.
9. ABANDONED CAPPED DRAINAGE PUMP DISCHARGE PIPE THROUGH PUMP WELL WALL.
10. REMOVE EXISTING CAST-IRON BALL CHECK VALVE AND REPLACE WITH STAINLESS STEEL SILENT CHECK VALVE.

GRAPHIC SCALE

1/4"=1'-0" 4' 2' 0 4' 8'

CHECK GRAPHIC SCALE BEFORE USING

PFD			APPR
JAN 07, 2015			DATE
FINAL SUBMISSION			DESCRIPTION
			SYM

NAVFAC

STATE OF MAINE MATTHEW S. ALBERT No. 9235 LICENSED PROFESSIONAL ENGINEER 1-9-15

OAK POINT ASSOCIATES

A/E INFO

APPROVED

FOR COMMANDER NAVFAC

ACTIVITY

SEE G-001 FOR DDCB BLOCK

SATISFACTORY TO DATE 01/07/15

DES SMC DRW RDA CHK MSA

PM/DM R C PANTEL

BRANCH MANAGER AMIN BAHROUR

CHIEF ENG/ARCH LCDR J ROCHE

FIRE PROTECTION P BAKAJ

DEPARTMENT OF THE NAVY
NAVAL FACILITIES ENGINEERING COMMAND ~ MID-ATLANTIC
PWD-MAINE
NAVAL FACILITIES ENGINEERING COMMAND PORTSMOUTH NAVAL SHIPYARD ~ KITTERY, ME
NAVAL SHIPYARD KITTERY, ME

DRY DOCK #3 PUMP WELL REPAIRS

OPTION 1 - MECHANICAL DRAINAGE PIPING SECTIONS 1

MAXIMO No:

EPROJECT NO.: 1332591

CONSTR. CONTR. NO. N40085-15-C-6109

NAVFAC DRAWING NO. 12686313

SHEET 45 OF 66

M-301 DD3-14-704

DRAWFORM REVISION: 10 MARCH 2009

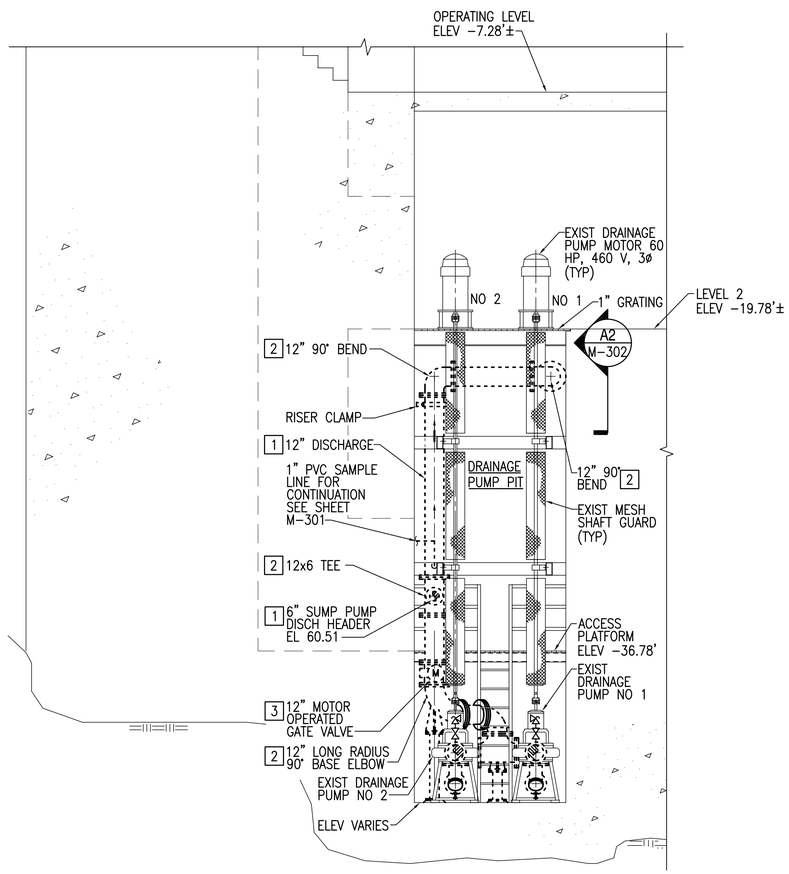

LONGITUDINAL SECTION B2

SCALE: 1/4"=1'-0" M-301

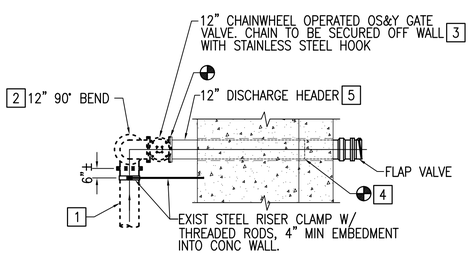

SECTION A2

SCALE: 1/4"=1'-0"

GENERAL SHEET NOTE

1. REFER TO SEQUENCING NOTES ON SHEET G-003 FOR ITEMS AFFECTING MECHANICAL WORK.

KEYNOTES (THIS SHEET ONLY)

1. REMOVE EXISTING DUCTILE IRON DRAINAGE PIPE AND REPLACE WITH PP-R PIPE.
2. REMOVE EXISTING DUCTILE IRON DRAINAGE FITTING AND REPLACE WITH PP-R FITTING.
3. REMOVE EXISTING CAST-IRON VALVE AND REPLACE WITH STAINLESS STEEL VALVE.
4. EXTEND 12" DISCHARGE HEADER THROUGH OUTER FACE OF SHEETING AND PROVIDE FLAP VALVE. PIPE SHALL BE PP-R.
5. PROVIDE PIPING RE-INFORCEMENT SYSTEM ON EXTERIOR OF EXPOSED EXISTING PIPE TO REMAIN, BASIS OF DESIGN "ENCON, METALCLAD, DURA-WRAP" OR APPROVED EQUIVALENT. INSTALL RE-INFORCEMENT SYSTEM IN ACCORDANCE WITH MANUFACTURER'S WRITTEN INSTRUCTIONS.

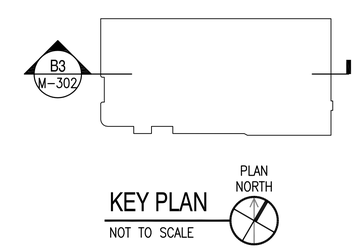

KEY PLAN

NOT TO SCALE

GRAPHIC SCALE

1/4"=1'-0" 4' 2' 0 4' 8'

CHECK GRAPHIC SCALE BEFORE USING

SYM	DESCRIPTION	DATE	APPR
FINAL SUBMISSION		JAN 07, 2015	PFD

NAVFAC

STATE OF MAINE MATTHEW S. ALBERT No. 9235 LICENSED PROFESSIONAL ENGINEER

OAK POINT ASSOCIATES ARCHITECTURE • ENGINEERING • PLANNING

A/E INFO

APPROVED

FOR COMMANDER NAVFAC

ACTIVITY

SEE G-001 FOR DDCB BLOCK

SATISFACTORY TO DATE 01/07/15

DES SMC DRW RDA CHK MSA

PM/DM R C PANTEL

BRANCH MANAGER AMIN BAHROUR

CHIEF ENG/ARCH LCDR J ROCHE

FIRE PROTECTION P BAKAJ

DEPARTMENT OF THE NAVY
NAVAL FACILITIES ENGINEERING COMMAND
PWD-MAINE

NAVAL FACILITIES ENGINEERING COMMAND ~ MID-ATLANTIC
PORTSMOUTH NAVAL SHIPYARD ~ KITTERY, ME

NAVAL SHIPYARD KITTERY, ME

DRY DOCK #3 PUMP WELL REPAIRS

OPTION 1 - MECHANICAL DRAINAGE PIPING SECTIONS 2

MAXIMO No.:

EPROJECT NO.: 1332591

CONSTR. CONTR. NO. N40085-15-C-6109

NAVFAC DRAWING NO. 12686314

SHEET 46 OF 66

M-302 DD3-14-705

DRAWFORM REVISION: 10 MARCH 2009

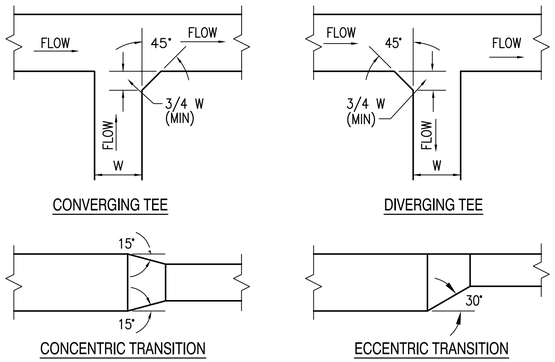

RECTANGULAR DUCT TRANSITIONS DETAIL (C2)

NOT TO SCALE

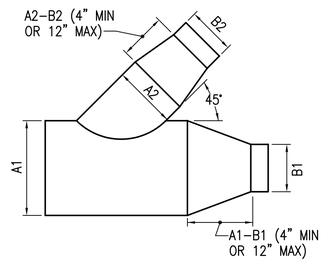

ROUND DUCT-CONICAL REDUCING LATERAL (C3)

NOT TO SCALE

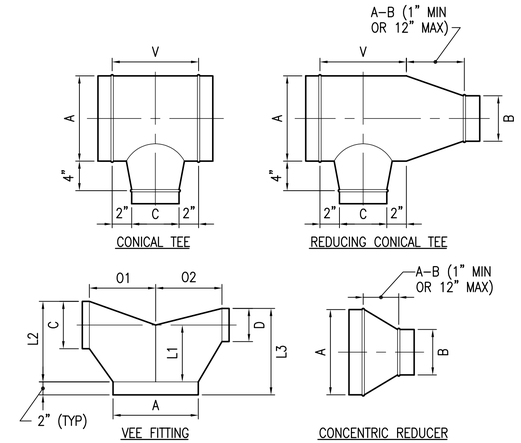

TYPICAL ROUND DUCT FITTINGS DETAIL (C4)

NOT TO SCALE

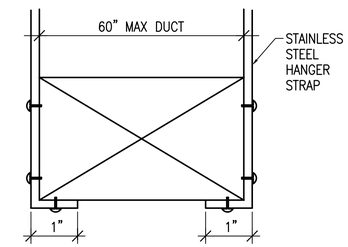

NOTE:
SIZE AND RATING OF HANGERS AND SUPPORTS SHALL BE PER LATEST SMACNA STANDARDS.

DUCT SUPPORT ATTACHMENTS DETAIL (C5)

NOT TO SCALE

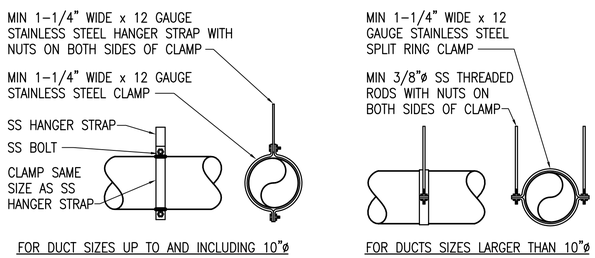

ROUND DUCT HANGER DETAIL (B2)

NOT TO SCALE

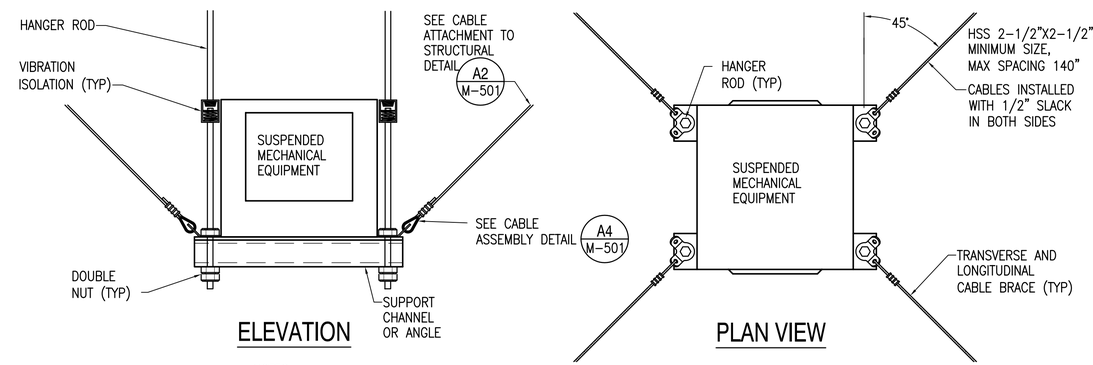

NOTES:

1. SUSPENDED MECHANICAL EQUIPMENT WEIGHING OVER 31 LBS SHALL BE INSTALLED TO RESIST FORCES OF 0.5 TIMES THE EQUIPMENT WEIGHT IN ANY DIRECTION AND 1.5 TIMES THE EQUIPMENT WEIGHT IN THE DOWNWARD DIRECTION.
2. SUPPORTS AND BRACING SHALL BE STAINLESS STEEL.

SEISMIC BRACING DETAIL FOR SUSPENDED MECHANICAL EQUIPMENT (B4)

NOT TO SCALE

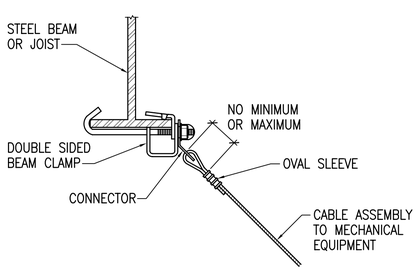

NOTE:

1. DETAIL APPLIES ONLY WHEN DRILLING OR WELDING IS NOT FEASIBLE OR PERMITTED.

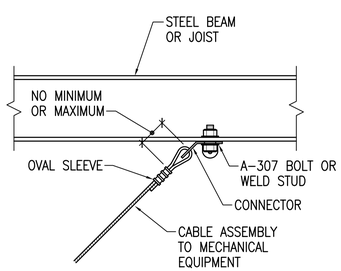

NOTE:

1. DETAIL APPLIES WHERE DRILLING OR WELDING IS FEASIBLE OR PERMITTED.

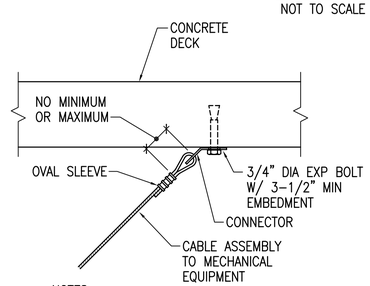

NOTES:

1. LOCATE EXISTING REINFORCING STEEL PRIOR TO INSTALLATION OF EXPANSION BOLTS.
2. DO NOT CUT OR ALTER EXISTING REINFORCING STEEL. RELOCATE/REPOSITION ANCHOR TO AVOID EXISTING REINFORCING STEEL.
3. COMPONENTS SHALL BE STAINLESS STEEL.

SEISMIC CABLE BRACING ATTACHMENT TO STRUCTURE DETAILS (A2)

NOT TO SCALE

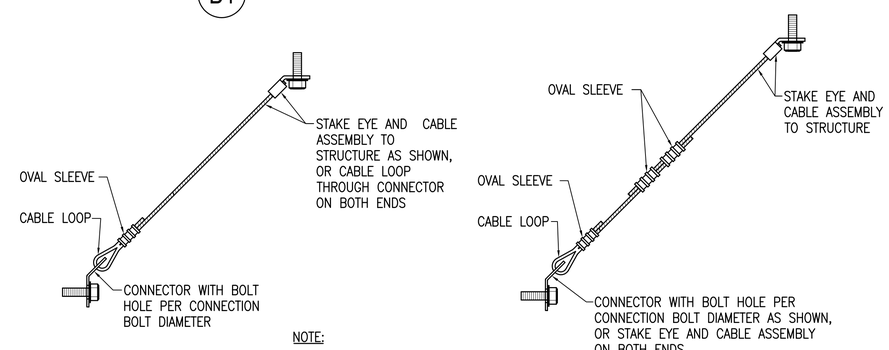

NOTE:

1. COMPONENTS SHALL BE STAINLESS STEEL.

SEISMIC CABLE BRACING ASSEMBLY DETAILS (A5)

NOT TO SCALE

PFD			APPR
JAN 07, 2015			DATE
FINAL SUBMISSION			DESCRIPTION
			SYM

NAVFAC

STATE OF MAINE
MATTHEW S. ALBERT
No. 9235
LICENSED
PROFESSIONAL ENGINEER
1-9-15

OAK POINT ASSOCIATES
ARCHITECTURE • DESIGN • PLAN

A/E INFO

APPROVED

FOR COMMANDER NAVFAC

ACTIVITY
SEE G–001 FOR DDCB BLOCK

SATISFACTORY TO DATE 01/07/15
DES SMC DRW RDA CHK MSA
PM/DM R C PANTEL
BRANCH MANAGER AMIN BAHROUR
CHIEF ENG/ARCH LCDR J ROCHE
FIRE PROTECTION P BAKAJ

DEPARTMENT OF THE NAVY
NAVAL FACILITIES ENGINEERING COMMAND
PWD–MAINE
NAVAL FACILITIES ENGINEERING COMMAND ~ MID-ATLANTIC
PORTSMOUTH NAVAL SHIPYARD ~ KITTERY, ME
NAVAL SHIPYARD
KITTERY, ME
DRY DOCK #3 PUMP WELL REPAIRS
MECHANICAL DETAILS

MAXIMO No:
EPROJECT NO.: 1332591
CONSTR. CONTR. NO.
N40085–15–C–6109
NAVFAC DRAWING NO.
12686315
SHEET 47 OF 66

M-501 | DD3-14-706

DRAWFORM REVISION: 10 MARCH 2009

09 Jan, 2015 – 11:50am
C:\dfile\21105.16–M501.dwg

DEHUMIDIFIER SCHEDULE

UNIT NO	LOCATION	FAN DATA			DEHUMIDIFIER (82°F DB/50% RH)			COMPRESSOR			ELECTRICAL DATA						BASIS OF DESIGN	NOTES
		CFM	ESP	HP	MOISTURE REMOVAL LBS/HR	NET TC/SC MBH	NET REHEAT MBH	TYPE	MBH	REFRIGERANT TYPE	VOLTS/PHASE	OPERATING KW	MCA	COMPRESSOR QTY	COMPRESSOR RLA	COMPRESSOR LRA		
DH-1A	OPERATING LEVEL	3000	0.5	1.5	26.1	65.5/38.4	38.4	SCROLL	65.5	R-407C	460/3	6.72	14.6	1	9.0	75	DCA 3000T	1
DH-2A	LEVEL 2	3000	0.5	1.5	26.1	65.5/38.4	38.4	SCROLL	65.5	R-407C	460/3	6.72	14.6	1	9.0	75	DCA 3000T	1, 2
	LEVEL 2	4800	0.5	3	64.1	125.0/73.3	73.3	SCROLL	125.0	R-407C	460/3	12.2	26.2	1	17.2	125	DCA 4800T	1, 3

NOTES:
1. PROVIDE WITH MANUFACTURERS STANDARD HUMIDISTAT AND THERMOSTAT
2. BASE BID MODEL
3. OPTION 3 ONLY MODEL

AIR COOLED CONDENSER UNIT SCHEDULE

UNIT NO	SERVES	CAPACITY FULL LOAD MBH	REFRIG TYPE	DESIGN TEMP		CONDENSER FAN(S)			ELECTRICAL		BASIS OF DESIGN	NOTES
				SATURATED SUCTION TEMP °F	COND AMBIENT	QTY	FAN HP EA	FLA EA	VOLTS/PHASE	MCA		
CU-1A	DH-1A	101.7	R-407C	45	95°F	1	1.5	2.5	460/3	5	DCA ORC-330	
CU-2A	DH-2A	101.7	R-407C	45	95°F	1	1.5	2.5	460/3	5	DCA ORC-330	1
	DH-2A	125.0	R-407C	45	95°F	2	1/3	2.6	460/3	15	DCA LORC-14	2

NOTES:
1. BASE BID MODEL
2. OPTION 3 ONLY MODEL

DIFFUSER / REGISTER SCHEDULE

UNIT NO	FACE SIZE IN	NECK SIZE IN	MAX PRESSURE DROP IN WC	MAX NOISE CRITERIA	CFM RANGE	TYPE	BASIS OF DESIGN	NOTES
S-1	12x12	12x12	0.15	30	600	DOUBLE DEFLECTION SUPPLY GRILLE	PRICE 720	
S-2	14x6	14x6	0.15	30	300	DOUBLE DEFLECTION SUPPLY GRILLE	PRICE 720	
S-3	18x8	18x8	0.10	30	550	DOUBLE DEFLECTION SUPPLY GRILLE	PRICE 720DSS	1
S-4	36x24	36x24	0.07	30	2590	DOUBLE DEFLECTION SUPPLY GRILLE	PRICE 720	
E-1	36x24	36x24	0.07	30	2590	SINGLE DEFLECTION EXHAUST GRILLE	PRICE 730	

NOTES: 1. PROVIDE WITH OPPOSED BLADE DAMPER

DUCT MOUNTED ELECTRIC HEATING COIL SCHEDULE

UNIT NO	SERVES	CFM	EAT	LAT	DUCT DIMENSIONS	MAX PRESSURE DROP IN WC	CAPACITY KW	NO OF STEPS	CONTROL VOLTAGE	VOLTS/ PHASE	BASIS OF DESIGN	NOTES
EDH-3	DH-3	2250	65	88	18"x18"	0.15	17.0	3	24	480/3	INDEECO TFZ	1

NOTES: 1. CASING SHALL BE STAINLESS STEEL CONSTRUCTION

FAN SCHEDULE

UNIT NO	SERVES	CFM	ESP IN WC	DRIVE TYPE	FAN TYPE	FAN RPM	SOUND dB	HP	VOLTS/ PHASE	BASIS OF DESIGN	NOTES
SF-1A	OPERATING LEVEL	5180	2	BELT	INLINE	1131	71	3	460/3	GREENHECK 24-TCF-1-I	
EF-1A	OPERATING LEVEL	5180	2	BELT	INLINE	1131	71	3	460/3	GREENHECK 24-TCF-1-I	

NOTES:

LOUVER SCHEDULE

UNIT NO	SERVES	TYPE	CFM	DIMENSIONS (IN)			MIN FREE AREA SQUARE FT	BASIS OF DESIGN	NOTES
				LENGTH	HEIGHT	DEPTH			
L-1	OUTSIDE AIR	STATIONARY	2590	42	24	6	3.24	RUSKIN ELF6375DX	1, 2, 3
L-2	OUTSIDE AIR	STATIONARY	2590	42	24	6	3.24	RUSKIN ELF6375DX	1, 2, 3

NOTES:
1. PROVIDE WITH BIRD SCREEN
2. LOUVER SHALL BE DRAINABLE
3. PROVIDE FINISH IN CUSTOM COLOR SELECTED BY THE CONTRACTING OFFICER

EXISTING DESICCANT DEHUMIDIFIER SCHEDULE

UNIT NO	LOCATION	PROCESS FAN		REACTIVATION FAN MAX CFM	MOISTURE REMOVAL LBS/HR (75°F DB/50% RH)	ELECTRICAL DATA		MANUFACTURER AND MODEL	MANUFACTURER SERIAL NUMBER	NOTES
		CFM	ESP			VOLTS/PHASE	FLA			
DH-3	LEVEL 2	2250	0.7	600	60.0	460/3	67.1	MUNTERS HCD-2250-EA-SF	3739	1
DH-4	MEZZ "A"	600	0.3	230	16.0	460/3	22.7	MUNTERS HCD-600-EA-SF	3566	
DH-5	LEVEL 1	600	0.3	230	16.0	460/3	22.7	MUNTERS HCD-600-EA-SF	3567	

NOTES: 1. THIS IS EXISTING DEHUMIDIFIER DH-6 RELABLED AS DH-3

TEMPORARY DRAINAGE PUMP SCHEDULE (OPTION 1)

UNIT NO	SERVES	TYPE	MOTOR DATA			DISCHARGE (IN)	BASIS OF DESIGN	NOTES
			HP	AMPS	VOLTS/PHASE			
TDP-1	SUMP PIT	SUBMERSIBLE	27	31	460/3	6	FLYGT BIBO 2870MT	1, 2
TDP-2	SUMP PIT	SUBMERSIBLE	27	31	460/3	6	FLYGT BIBO 2870MT	1, 2

NOTES: 1. PROVIDE WITH INCREASER AND BAUER QUICK DISCONNECT FITTING FOR 8" HOSE ON DISCHARGE.
2. PROVIDE WITH MANUFACTURER INSTALLED CATHODIC PROTECTION, AUTOMATIC/MANUAL STARTER AND EXTERNAL LEVEL REGULATOR.

GENERAL NOTE

NOTE ON BASIS OF DESIGN

PRODUCTS OF OTHER MANUFACTURERS ARE ACCEPTABLE IF THEY MEET THE OPERATIONAL REQUIREMENTS INDICATED. ANY ADJUSTMENTS TO DUCTING, PIPING, WIRING OR CONFIGURATION DUE TO THE SELECTION OF A MANUFACTURER OTHER THAN THAT LISTED AS THE BASIS OF DESIGN WILL BE ACCOMPLISHED BY THE CONTRACTOR AT NO ADDITIONAL EXPENSE TO THE GOVERNMENT.

SYM	DESCRIPTION	DATE	APPR.
FINAL SUBMISSION		JAN 07, 2015	PFD

NAVFAC

STATE OF MAINE
MATTHEW S. ALBERT
No. 9235
LICENSED PROFESSIONAL ENGINEER
1-9-15

OAK POINT ASSOCIATES
ARCHITECTURE • ENGINEERING • PLANNING
A/E INFO

APPROVED

FOR COMMANDER NAVFAC

ACTIVITY
SEE G-001 FOR DDCB BLOCK

SATISFACTORY TO DATE 01/07/15

DES SMC DRW RDA CHK MSA
PM/DM R C PANTEL
BRANCH MANAGER AMIN BAHROUR
CHIEF ENG/ARCH LCDR J ROCHE
FIRE PROTECTION P BAKAJ

DEPARTMENT OF THE NAVY
NAVAL FACILITIES ENGINEERING COMMAND
PWD-MAINE
NAVAL FACILITIES ENGINEERING COMMAND ~ MID-ATLANTIC
NAVAL SHIPYARD PORTSMOUTH NAVAL SHIPYARD ~ KITTERY, ME
KITTERY, ME

DRY DOCK #3 PUMP WELL REPAIRS

MECHANICAL SCHEDULES

MAXIMO No:
EPROJECT NO.: 1332591
CONSTR. CONTR. NO. N40085-15-C-6109
NAVFAC DRAWING NO. 12686316
SHEET 48 OF 66

M-601 | DD3-14-707

DRAWFORM REVISION: 10 MARCH 2009

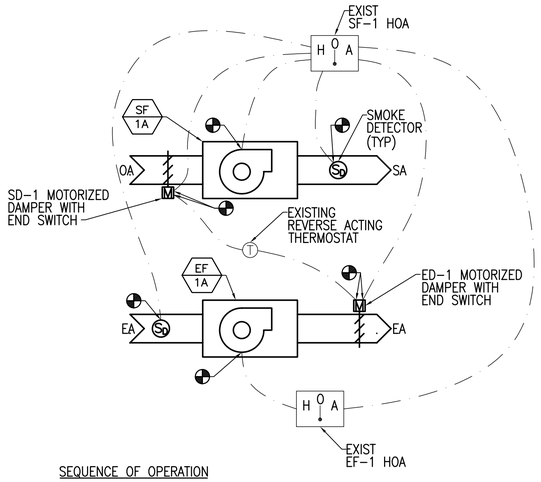

SEQUENCE OF OPERATION

EF-1A AND SF-1A SHALL BE CONTROLLED BY EXISTING HAND-OFF-AUTO SWITCHES LOCATED IN EXISTING MOTOR STARTERS. IN HAND POSITION, ED-1 AND SD-1 SHALL OPEN. WHEN BOTH DAMPERS ARE PROVED TO BE OPEN BY END SWITCH, EF-1A AND SF-1A SHALL START.

WHEN HAND-OFF-AUTO SWITCHES ARE IN OFF POSITION, EF-1A AND SF-1A SHALL STOP AND BOTH DAMPERS SD-1 AND ED-1 SHALL CLOSE.

WHEN HAND-OFF-AUTO SWITHCES ARE IN AUTO POSITION, EF-1A SHALL BE CONTROLLED BY REVERSE ACTING THERMOSTAT. UPON SPACE TEMPERATURE RISING ABOVE TEMPERATURE SET POINT, THERMOSTAT SHALL OPEN ED-1 AND SD-1 AND START EF-1 THROUGH END SWITCHES, SF-1A IS INTERLOCKED WITH EF-1A AND SHALL START IN UNISON WITH EF-1A. WHEN SPACE TEMPERATURE DROPS, THE REVERSE SEQUENCE SHALL OCCUR.

SAFETIES:
SMOKE DETECTORS SHALL STOP EF-1A AND SF-1A AND CLOSE ED-1 AND SD-1 UPON THE DETECTION OF SMOKE. PROVIDE TROUBLE LIGHT AND MANUAL RESET SWITCH. WIRE BOTH SMOKE DETECTORS TO THE FIRE ALARM PANEL.

EXHAUST FAN EF-1A AND SUPPLY FAN SF-1A CONTROL DIAGRAM (B2)

NOT TO SCALE

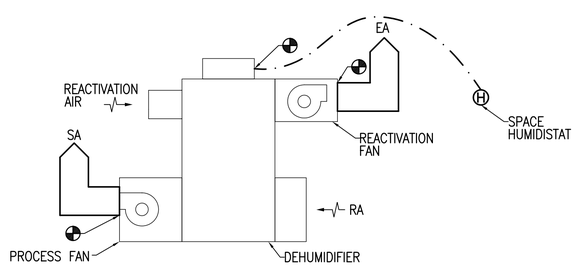

SEQUENCE OF OPERATION

SPACE HUMIDISTAT SHALL START THE DEHUMIDIFIER AS SPACE RELATIVE HUMIDITY RISES ABOVE SET POINT (50% ADJUSTABLE). THE DEHUMIDIFIER SHALL STOP WHEN SPACE RELATIVE HUMIDITY REACHES SET POINT.

DH-4 AND DH-5 CONTROL DIAGRAM (A2)

NOT TO SCALE

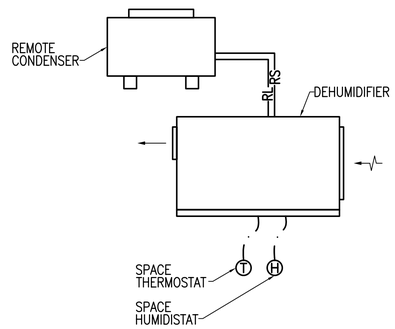

SEQUENCE OF OPERATION

SPACE HUMIDISTAT SHALL START THE DEHUMIDIFIER AS SPACE RELATIVE HUMIDITY RISES ABOVE SET POINT (50% ADJUSTABLE). THE DEHUMIDIFIER SHALL STOP WHEN SPACE RELATIVE HUMIDITY REACHES SET POINT.

SPACE TEMPERATURE THERMOSTAT SHALL CYCLE UNIT ON AND OFF TO MAINTAIN SPACE TEMPERATURE HEATING SET POINT OF 68°F (ADJUSTABLE) AND COOLING SET POINT OF 75°F (ADJUSTABLE)

HUMIDISTAT SHALL OVERRIDE THERMOSTAT OPERATION.

DH-1A AND CU-1A CONTROL DIAGRAM DH-2A AND CU-2A SIMILAR (C3)

NOT TO SCALE

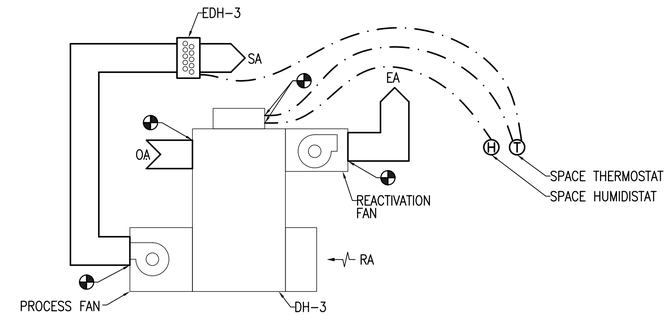

SEQUENCE OF OPERATION

SPACE HUMIDISTAT SHALL START THE DEHUMIDIFIER AS SPACE RELATIVE HUMIDITY RISES ABOVE SET POINT (50% ADJUSTABLE). THE DEHUMIDIFIER SHALL STOP WHEN SPACE RELATIVE HUMIDITY REACHES SET POINT.

SPACE TEMPERATURE THERMOSTAT SHALL START PROCESS FAN AND ENERGIZE EDH-3 TO MAINTAIN SPACE TEMPERATURE HEATING SET POINT OF 68°F (ADJUSTABLE).

HUMIDISTAT SHALL OVERRIDE THERMOSTAT OPERATION.

DH-3 AND EDH-3 CONTROL DIAGRAM (C5)

NOT TO SCALE

SYM	DESCRIPTION	DATE	APPR
FINAL SUBMISSION		JAN 07, 2015	PFD

NAVFAC

STATE OF MAINE
MATTHEW S. ALBERT
No. 9235
LICENSED
PROFESSIONAL ENGINEER
1-9-15

OAK POINT ASSOCIATES
ARCHITECTURE • ENGINEERING • PLANNING

A/E INFO

APPROVED

FOR COMMANDER NAVFAC

ACTIVITY
SEE G-001 FOR DDCB BLOCK

SATISFACTORY TO DATE 01/07/15

DES SMC DRW RDA CHK MSA

PM/DM R C PANTEL

BRANCH MANAGER AMIN BAHROUR

CHIEF ENG/ARCH LCDR J ROCHE

FIRE PROTECTION P BAKAJ

DEPARTMENT OF THE NAVY
NAVAL FACILITIES ENGINEERING COMMAND
PWD-MAINE
NAVAL FACILITIES ENGINEERING COMMAND ~ MID-ATLANTIC
PORTSMOUTH NAVAL SHIPYARD ~ KITTERY, ME
NAVAL SHIPYARD KITTERY, ME

DRY DOCK #3 PUMP WELL REPAIRS

MECHANICAL CONTROL DIAGRAMS

MAXIMO No:

EPROJECT NO.: 1332591

CONSTR. CONTR. NO. N40085-15-C-6109

NAVFAC DRAWING NO. 12686317

SHEET 49 OF 66

M-701 DD3-14-708

DRAWFORM REVISION: 10 MARCH 2009

09 Jan, 2015 - 11:56am
C:\dfile\21105.16-M701.dwg