BUILDING 260 - EXTENSIVE REPAIRS

NORFOLK NAVAL SHIPYARD
PORTSMOUTH, VIRGINIA

NAVAL FACILITIES ENGINEERING COMMAND MID-ATLANTIC

PUBLIC WORKS DEPARTMENT NORFOLK
FACILITIES ENGINEERING AND ACQUISITION DIVISION
NORFOLK, VIRGINIA

US NAVY PHOTOGRAPH
FOR OFFICIAL USE ONLY

APPR	DATE	DESCRIPTION	SYM

NAVFAC

SEAL

A/E INFO

APPROVED
FOR RALPH DEAL 3/25/15
FOR COMMANDER NAVFAC

ACTIVITY
SATISFACTORY TO DATE 3-24-15

DES RMR | DRW RMR | CHK SWC

<CPM/EM/> R. M. RUSSELL

BRANCH MANAGER

ENGR DIRECTOR Ralph D. Deal

CUSTOMER

DEPARTMENT OF THE NAVY
NAVAL FACILITIES ENGINEERING COMMAND
PWD PORTSMOUTH

NAVAL FACILITIES ENGINEERING COMMAND ~ MID ATLANTIC
NORFOLK NAVAL SHIPYARD ~ PORTSMOUTH, VIRGINIA

NORFOLK NAVAL SHIPYARD
PORTSMOUTH, VIRGINIA

B260 EXTENSIVE REPAIRS

GENERAL DATA & PHASING INFORMATION

SCALE: AS NOTED
EPROJECT NO.: 1146716
CONSTR. CONTR. NO.
N40085-15-R-0018
NAVFAC DRAWING NO.
12681955
SHEET 1 OF 118

G-001

DRAWFORM REVISION: 10 MARCH 2009

FILE NAME: P:\VA\VNSY\Buildings\0260\2011_1146716_Nuclear Materials Whse Repairs\B_Design\Drawings\BLDG260-1146716-G-001 002.dwg LAYOUT NAME: G-001 PLOTTED: Tuesday, March 24, 2015 - 9:34am USER: renee.russell

VICINITY MAP

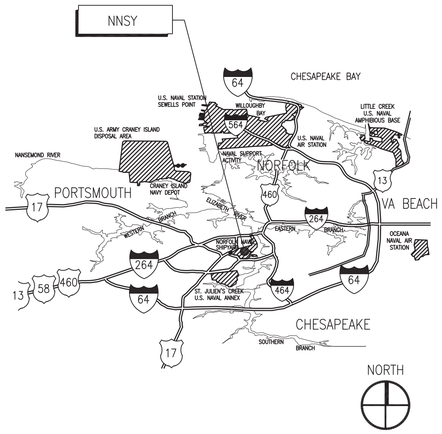

GOVERNING REGULATIONS

BUILDING CODES
UNIFIED FACILITIES CRITERIA (UFC) 1-200-01 DESIGN: GENERAL BUILDING REQUIREMENTS

INTERNATIONAL BUILIDNG CODE (IBC)

MECHANICAL CODE
INTERNATIONAL MECHANICAL CODE (IMC)

ELECTRICAL CODE
NFPA 70, NATIONAL ELECTRIC CODE

PLUMBING CODE
INTERNATIONAL PLUMBING CODE (IPC)

FIRE PREVENTION & LIFE SAFETY CODES
UNIFIED FACILITIES CRITERIA (UFC) 3-600-01 DESIGN: FIRE PROTECTION ENGINEERING FOR FACILITIES

NFPA 101, LIFE SAFETY CODE

SHIPYARD MAP

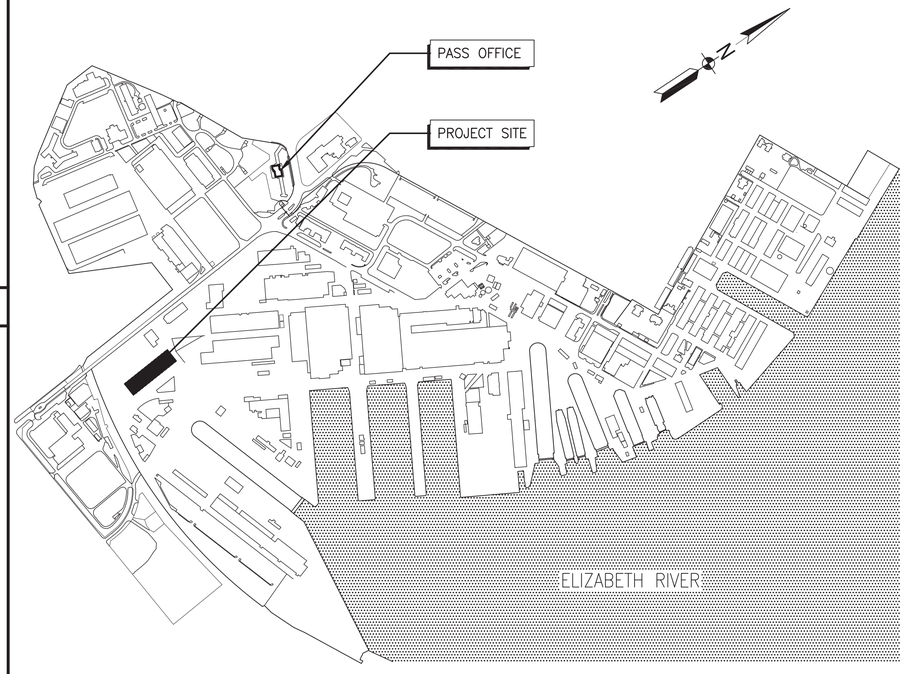

NOTE: SITE MAP NOT TO SCALE

SITE MAP

LIMITS OF CONSTRUCTION. CONTRACTOR LAYDOWN AREA MAY BE LOCATED WITHIN THIS AREA BUT MAY NOT BLOCK STREETS, RAILROAD TRACKS, OR SITE UTILITIES. IF ACCESS TO ANY OTHER AREA IS REQUIRED, IT SHALL FIRST BE CLEARED WITH THE CONTRACTING OFFICER'S REPRESENTATIVE.

PLAN NORTH

GENERAL NOTES

1. PROTECTION – THE BUILDING WILL NOT BE OPERATIONAL DURING CONSTRUCTION. OCCUPANTS OF ADJACENT BUILDING SHALL BE PROTECTED FROM CONTRACTOR OPERATIONS. SEE SPECIFICATIONS SECTION 01 14 00.00 22 WORK RESTRICTIONS, FOR ADDITIONAL CONTRACTOR ACCESS AND USE REQUIREMENTS.

2. CONSTRUCTION AND DEMOLITION WASTE MANAGEMENT - TO THE MAXIMUM EXTENT PRACTICAL, ITEMS INDICATED FOR REMOVAL SHALL BE DIVERTED FROM LANDFILL DISPOSAL. SEE SPECIFICATIONS SECTION 01 74 19.00 22 CONSTRUCTION AND DEMOLITION WASTE MANAGEMENT FOR ADDITIONAL REQUIREMENTS. CONTRACTING OFFICER'S REPRESENTATIVE MAY DESIGNATE A LOCATION FOR CONTRACTOR LAY-DOWN OF DIVERTED MATERIALS FOR FURTHER DISPOSITION. CONTRACTOR MAY CONTACT CONNIE LEHMKUHL, NAVFAC MIDLANT SOLID WASTE MANAGER AT 757-635-6310 FOR DISPOSAL OF SELECT MATERIALS.

3. UTILITIES - SEE CIVIL, FIRE PROTECTION, PLUMBING, MECHANICAL, AND ELECTRICAL, SHEETS FOR CONNECTION TO EXISTING GAS, COMPRESSED AIR, WATER FOR FIRE PROTECTION, AND ELECTRICAL SUPPLY AND TO NEW SYSTEMS TO BE PROVIDED IN THIS CONTRACT.

4. EXISTING OVERHEAD LIGHTING – REMOVE AND SALVAGE EXISTING WAREHOUSE LIGHTING FIXTURES FOR RE-INSTALLATION IN NEW WORK. SEE SHEETS ED-101 AND ED-102 FOR ADDITIONAL REQUIREMENTS.

5. RAILROAD TRACKS – EXISTING RAILROAD TRACKS IN THE CENTER OF THE HIGH BAY SHALL BE ENCAPSULATED BY NEW CONCRETE FLOOR SLAB OVERLAY. SEE PLAN SHEETS S-101 AND S-102.

6. BUILDING-IN-BUILDING (BIB) – BEFORE REMOVAL OF BIB CONTRACTOR SHALL REVIEW DEMOLITION DRAWINGS FOR EACH DISCIPLINE TO ASSURE THAT ALL UTILITIES TO REMAIN ARE IDENTIFIED AND RELOCATED IF REQUIRED PRIOR TO DEMOLITION. NO ABANDONMENT-IN-PLACE OF EXISTING UTILITIES TO BE DEMOLISHED SHALL BE PERMITTED.

7. SURFACE PREPARATION – SIDING: THE INTERIOR SIDE OF EXISTING EXTERIOR CORRUGATED METAL WALLS AND ROOFS SHALL BE PREPARED TO RECEIVE SPRAY POLYURETHANE FOAM (SPF) INSULATION. FOLLOW MANUFACTURER'S PRINTED INSTRUCTIONS FOR REMOVAL OF ALL ITEMS DELETERIOUS TO ADHESION. SEE SPECIFICATIONS SECTION 07 57 19.00 22 TEMPORARY ENVIRONMENTAL CONTROLS FOR ADDITIONAL REQUIREMENTS.

8. SURFACE PREPARATION – STRUCTURAL STEEL: EXPOSED STRUCTURAL STEEL COLUMNS, TRUSSES, PURLINS, ANGLES, PLATES, AND OTHER SHAPES TO BE RETAINED SHALL BE CLEANED OF ALL MATERIAL DELETERIOUS TO ADHESION OF A NEW HIGH PERFORMANCE COATING SYSTEM. SEE FINISH SCHEDULE, SHEET A-601 FOR COLORS AND SPECIFICATIONS SECTION 09 90 00 FOR PAINTING REQUIREMENTS.

9. REMOVAL OF OBSTRUCTIONS – REMOVE AND DIVERT FROM LANDFILL MISCELLANEOUS STEEL NOT IN PLANE WITH PRIMARY STRUCTURAL STEEL. THIS INCLUDES, BUT IS NOT LIMITED TO, PAIRED CHANNELS WITH TOP PLATES ATTACHED AT COLUMN LINES "C", "F", AND "E," SEE PHOTO A2/AD-201 FOR EXAMPLE OBSTRUCTION.

10. CLERESTORY WINDOWS: EXISTING CORRUGATED WIRE GLASS WINDOWS SHALL BE COMPLETELY REMOVED AND DIVERTED FROM THE LANDFILL. STRUCTURAL STEEL FRAMING AT BOTTOM OF CLERESTORY WINDOWS SHALL ALSO BE REMOVED PER DETAIL AND C4/S-305.

11. FIRE PROTECTION: EXISTING PIPING FOR NON-OPERATIVE SPRINKLER SYSTEM HAS BEEN ABANDONED IN PLACE. IT SHALL BE COMPLETELY REMOVED FROM EXISTING STRUCTURAL FRAMING, INCLUDING PIPING, SUPPORTS, BRACKETS, CONNECTIONS, AND ASSOCIATED EQUIPMENT. REMOVED PIPING SHALL BE DIVERTED FROM LANDFILL AND STORED WHERE DIRECTED BY CONTRACTING OFFICER'S REPRESENTATIVE FOR RECLAMATION IN ACCORDANCE WITH GENERAL DEMOLITION NOTE 2 ABOVE. HOLES IN WALLS FOR DEMOLISHED SPRINKLER SYSTEM SHALL BE FILLED AND FINISHED TO MATCH ADJACENT.

12. CRANE OPERATING ENVELOPE: CONTRACTOR SHALL BE AWARE THAT NO PERMANENT CONSTRUCTION IS PERMITTED IN THE OPERATING ENVELOPE OF EXISTING BRIDGE CRANE 117393 (SHOWN ON SHEET AD-101). THIS AREA RUNS FROM THE FACE OF COLUMN LINE B TO THE FACE OF COLUMN LINE C FOR THE ENTIRE LENGTH OF THE HIGH BAY, EXCLUDING, APPROXIMATELY 6' ON THE NORTH AND SOUTH ENDS. SEE PHOTO A4/AD-102 FOR LOCATION OF CRANE STOPS ON NORTH END. CONTRACTOR SHALL CONTACT THE CONTRACTING OFFICER AND ARCHITECT IF THERE IS AN APPARENT OR POTENTIAL CONFLICT.

13. HAZARDS: SEE HAZARDOUS MATERIALS NOTES AND HAZARDOUS ENERGY CONTROL NOTES ON SHEET G-003.

14. ACRONYMS: SEE SHEETS X-001 FOR DISCIPLINE-SPECIFIC ACRONYMS.

15. ANTITERRORISM – IN ACCORDANCE WITH UFC 4-010-01, BUILDING 260 IS CONSIDERED A "LOW OCCUPANCY BUILDING." AS SUCH IT DOES NOT MEET THE THRESHOLD FOR CONTROL UNDER THESE STANDARDS.

GENERAL SYMBOLS

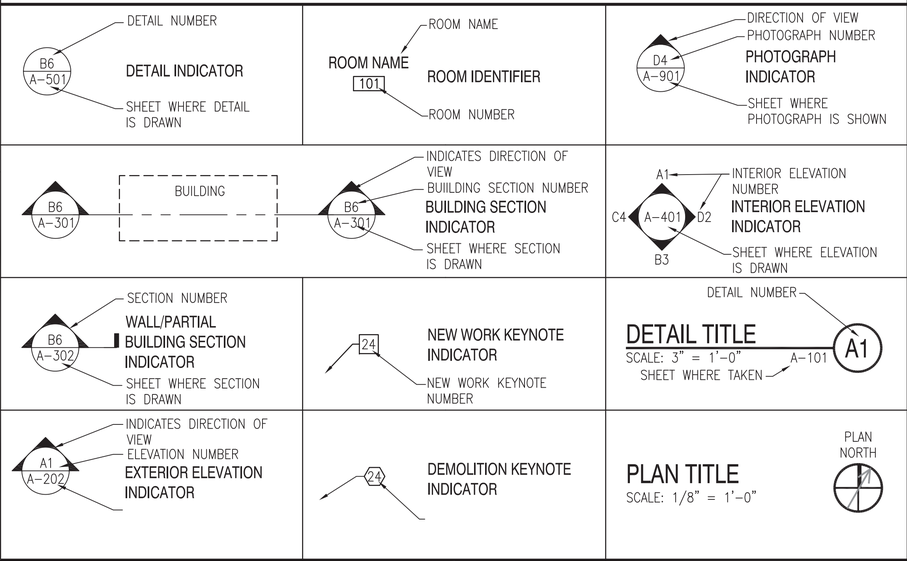

BUILDING DESIGN CRITERIA

USE GROUP (OCCUPANCY) CLASSIFICATION
GROUP S-1 (IBC 304.1)

TYPE OF CONSTRUCTION
TYPE II-B (PER IBC CHAPTER 6)

APPR	DATE	DESCRIPTION	SYM

NAVFAC

SEAL

A/E INFO

APPROVED
FOR RALPH DEAL 3/23/15
FOR COMMANDER NAVFAC

ACTIVITY
SATISFACTORY TO DATE 3-23-15

DES	RMR	DRW	RMR	CHK	SWC

<<PM/DM>> R. M. RUSSELL
BRANCH MANAGER
ENGR DIRECTOR Ralph D. Deal
CUSTOMER

DEPARTMENT OF THE NAVY
NAVAL FACILITIES ENGINEERING COMMAND
PWD PORTSMOUTH

NAVAL FACILITIES ENGINEERING COMMAND ~ MID ATLANTIC
NORFOLK NAVAL SHIPYARD - PORTSMOUTH, VIRGINIA

NORFOLK NAVAL SHIPYARD
PORTSMOUTH, VIRGINIA

B260 EXTENSIVE REPAIRS

GENERAL DATA & PHASING INFORMATION

SCALE: AS NOTED
EPROJECT NO.: 1146716
CONSTR. CONTR. NO. N40085-15-R-0018
NAVFAC DRAWING NO. 12681956
SHEET 2 OF 118

G-002

DRAWFORM REVISION: 10 MARCH 2009

FILE NAME: P:\VA\NNSY\Buildings\0260\2011_1146716_Nuclear Materials Whse Repairs\B_Design\Drawings\BUD260-1146716-G-001 002.dwg LAYOUT NAME: G-002 PLOTTED: Friday, March 20, 2015 - 7:37am USER: renee.russell

LIST OF DRAWINGS

SHEET NO.		NAVFAC DWG. NO.	SHEET TITLE
			GENERAL
1	G-001	12681955	COVER SHEET
2	G-002	12681956	GENERAL DATA & PHASING INFORMATION
3	G-003	12681957	LIST OF DRAWINGS
4	G-004	12681958	FIRE PROTECTION / LIFE SAFETY SUMMARY
			CIVIL
5	C-001	12681959	GENERAL CIVIL NOTES AND ABBREVIATIONS
6	CD-101	12681960	SITE DEMOLITION PLAN
7	C-101	12681961	SITE PLAN
8	C-401	12681962	LARGE SCALE SITE PLANS
9	C-501	12681963	CIVIL DETAILS
10	C-502	12681964	CIVIL DETAILS
			STRUCTURAL
11	S-001	12681965	GENERAL STRUCTURAL NOTES, LEGEND, AND ABBREVIATIONS
12	S-101	12681966	SLAB AND FOUNDATION PLAN – SOUTH
13	S-102	12681967	SLAB AND FOUNDATION PLAN – NORTH
14	S-103	12681968	CEILING FRAMING PLAN – SOUTH – BOT CHORD TRUSS BRACING
15	S-104	12681969	CEILING FRAMING PLAN – NORTH – BOT CHORD TRUSS BRACING
16	S-201	12681970	INTERIOR ROOF FRAMING PLAN
17	S-202	12681971	INTERIOR ROOF FRAMING PLANS
18	S-301	12681972	FOUNDATION SECTION
19	S-302	12681973	FOUNDATION AND FRAMING DETAILS
20	S-303	12681974	FRAMING SECTIONS
21	S-304	12681975	FRAMING SECTIONS
22	S-305	12681976	FRAMING SECTIONS AND DETAILS
23	S-306	12681977	FRAMING SECTIONS AND DETAILS
24	S-307	12681978	FRAMING SECTIONS AND DETAILS
25	S-308	12681979	FIXED LADDER DETAILS
26	S-701	12681980	REFERENCE – FOUNDATION PLAN
27	S-702	12681981	REFERENCE – PLAN AND ELEVATIONS
28	S-703	12681982	REFERENCE – PLAN OF OFFICE, TOILETS AND TYPICAL DETAILS
29	S-704	12681983	REFERENCE – TYPICAL CROS SECTION AND DETAILS
30	S-705	12681984	REFERENCE – FRAMING PLANS AND DETAILS
31	S-706	12681985	REFERENCE – ROOF FRAMING PLANS AND DETAILS
			ARCHITECTURAL
32	A-001	12681986	ARCHITECTURAL SYMBOLS, LEGENDS, ABBREVIATIONS & NOTES
33	AD-101	12681987	ARCHITECTURAL DEMOLITION PLAN
34	AD-102	12681988	ARCHITECTURAL DEMOLITION DETAIL PHOTOGRAPHS
35	AD-201	12681989	ARCHITECTURAL DEMOLITION LONGITUDINAL SECTION – INTERIOR ELEVATIONS AND PHOTOGRAPHS
36	AD-202	12681990	ARCHITECTURAL DEMOLITION CROSS SECTION AND PHOTOGRAPHS
37	AD-301	12681991	ARCHITECTURAL DEMOLITION SECTION AND PHOTOGRAPH
38	AD-701	12681992	REFERENCE DRAWING – LUNCH & LOCKER ROOM OVER TOILETS
39	A-101	12681993	ARCHITECTURAL NEW WORK PLAN
40	A-102	12681994	ARCHITECTURAL REFLECTED CEILING PLANS – OFFICE, LOCKER RM, BREAK RM., TOILETS, JANITOR
41	A-103	12681995	ARCHITECTURAL BIB ROOF PLAN – OFFICE, LOCKER RM, BREAK RM., TOILETS, JANITOR
42	A-104	12681996	ARCHITECTURAL BIB ROOF PLAN – PUMP RM, ELEC RM, WELD AREA, LOBBY 2, CLEAN AREA
43	A-201	12681997	ARCHITECTURAL NEW WORK ELEVATIONS – LONGITUDINAL – HIGH BAY
44	A-202	12681998	ARCHITECTURAL NEW WORK ELEVATIONS – CROSS-SECTION, WALL DETAILS
45	A-301	12681999	ARCHITECTURAL NEW WORK ELEVATIONS – LOW BAY; SECTION THROUGH LOBBY 1
46	A-302	12682000	ARCHITECTURAL NEW WORK WALL SECTIONS
47	A-303	12682001	ARCHITECTURAL NEW WORK WALL SECTIONS – DETAILS
48	A-401	12682002	LARGE SCALE ARCHITECTURAL PLANS – LOBBY 1, OFFICE, LOCKER ROOM, BREAK AREA, TOILETS
49	A-402	12682003	LARGE SCALE ARCH. PLANS – CLEAN AREA, WELD AREA, ELEC ROOM, PUMP ROOM, LOBBY 2
50	A-403	12682004	ARCHITECTURAL LARGE SCALE PLAN DETAILS
51	A-404	12682005	ARCHITECTURAL LARGE SCALE PLAN DETAILS
52	A-501	12682006	ARCHITECTURAL INTERIOR DETAILS
53	A-502	12682007	ARCHITECTURAL INTERIOR DETAILS
54	A-601	12682008	SCHEDULES, FINISH
55	A-602	12682009	DOOR SCHEDULE AND DETAILS
56	A-603	12682010	WINDOW SCHEDULE AND DETAILS

LIST OF DRAWINGS - CONTINUED

SHEET NO.		NAVFAC DWG. NO.	SHEET TITLE
			FIRE PROTECTION
57	FD-101	12682011	FIRE SPRINKLER DEMOLITION PLAN – SOUTH
58	FD-102	12682012	FIRE SPRINKLER DEMOLITION PLAN – NORTH
59	FD-103	12682013	FIRE SPRINKLER DEMOLITION PLAN – EXISTING ZONES
60	FD-104	12682014	FIRE ALARM DEMOLITION PLAN
61	FA-001	12682015	FIRE ALARM LEGEND AND DETAIL
62	FA-101	12682016	FIRE ALARM PLAN – NEW WORK – SOUTH
63	FA-102	12682017	FIRE ALARM PLAN – NEW WORK – NORTH
64	FA-501	12682018	FIRE ALARM MATRIX
65	FA-502	12682019	FIRE ALARM RISER DIAGRAM AND INTELLIGIBILITY REQUIREMENTS
66	F-101	12682020	FIRE SPRINKLER PLAN – NEW WORK – SOUTH
67	F-102	12682021	FIRE SPRINKLER PLAN – NEW WORK – NORTH
68	F-401	12682022	COMBINED FIRE PUMP ROOM LAYOUT AND FIRE ALARM PLAN
69	F-402	12682023	FIRE PUMP ROOM SECTIONAL LAYOUT PLAN
70	F-403	12682024	FIRE PUMP ROOM SECTIONAL LAYOUT PLAN
71	F-501	12682025	FIRE SPRINKLER DETAILS
			PLUMBING
72	P-001	12682026	PLUMBING SYMBOLS, LEGENDS, ABBREVIATIONS & NOTES
73	PD-101	12682027	PARTIAL FLOOR PLANS – PLUMBING DEMOLITION
74	P-101	12682028	PARTIAL FLOOR PLANS – PLUMBING NEW WORK
75	P-601	12682029	PLUMBING PIPING SCHEMATIC
76	P-602	12682030	PLUMBING PIPING SCHEMATIC
			MECHANICAL
77	M-001	12682031	MECHANICAL SYMBOLS, LEGENDS, ABBREVIATIONS & NOTES
78	MD-101	12682032	PARTIAL FLOOR PLAN – MECHANICAL DEMOLITION
79	MD-102	12682033	PARTIAL FLOOR PLAN – MECHANICAL DEMOLITION
80	MD-103	12682034	ENLARGED FLOOR PLANS – MECHANICAL DEMOLITION
81	M-101	12682035	PARTIAL FLOOR PLAN – HVAC NEW WORK
82	M-102	12682036	PARTIAL FLOOR PLAN – HVAC NEW WORK
83	M-103	12682037	ENLARGED PLANS – HVAC NEW WORK; UNIT HEATERS, EXHAUST FANS, DUCTRORK – SOUTH
84	M-104	12682038	ENLARGED PLANS – HVAC NEW WORK; UNIT HEATERS, EXHAUST FANS, DUCTRORK – NORTH
85	M-105	12682039	ENLARGED PLANS – HVAC NEW WORK; STEAM AND CONDENSATE PIPING – SOUTH
86	M-106	12682040	ENLARGED PLANS – HVAC NEW WORK; STEAM AND CONDENSATE PIPING – NORTH
87	M-107	12682041	PARTIAL FLOOR PLAN – COMPRESSED AIR NEW WORK
88	M-108	12682042	PARTIAL FLOOR PLAN – COMPRESSED AIR NEW WORK
89	M-109	12682043	PARTIAL FLOOR PLAN – PIPE HANGER NEW WORK
90	M-110	12682044	PARTIAL FLOOR PLAN – PIPE HANGER NEW WORK
91	M-111	12682045	PARTIAL FLOOR PLAN – HVAC CONTROLS
92	M-112	12682046	PARTIAL FLOOR PLAN – HVAC CONTROLS
93	M-201	12682047	BUILDING SECTION AND ELEVATION – MECHANICAL NEW WORK
94	M-501	12682048	MECHANICAL DETAILS – COMPRESSED AIR
95	M-502	12682049	MECHANICAL DETAILS – STEAM
96	M-503	12682050	MECHANICAL DETAILS – HANGERS, CLAMPS, SUPPORTS
97	M-504	12682051	MECHANICAL DETAILS – STEAM
98	M-601	12682052	MECHANICAL EQUIPMENT SCHEDULES – STEAM, EXHAUST FANS, AIR CONDITIONING
99	M-602	12682053	MECHANICAL EQUIPMENT SCHEDULES – UNIT HEATERS, STEAM CONVECTORS
100	M-603	12682054	MECHANICAL CONTROLS SCHEDULE – LOUVERS, DIFFUSERS
101	M-604	12682055	MECHANICAL CONTROLS DIAGRAMS
102	M-605	12682056	MECHANICAL CONTROLS DIAGRAMS
			ELECTRICAL
103	E-001	12682057	NOTES, LEGENDS, AND ABBREVIATIONS
104	ED-101	12682058	ELECTRICAL SITE DEMOLITION PLANS
105	ED-102	12682059	ELECTRICAL DEMOLITION PLAN
106	ED-103	12682060	ELECTRICAL DEMOLITION PLAN
107	ED-601	12682061	EXISTING ELECTRICAL ONE-LINE DIAGRAM – DISTRIBUTION VI(2300KV)
108	E-101	12682062	ELECTRICAL SITE NEW WORK PLAN
109	E-102	12682063	ELECTRICAL LIGHTING NEW WORK PLAN
110	E-103	12682064	ELECTRICAL LIGHTING NEW WORK PLAN
111	E-104	12682065	ELECTRICAL POWER NEW WORK PLAN
112	E-105	12682066	ELECTRICAL POWER NEW WORK PLAN
113	E-401	12682067	ELECTRICAL ENLARGED NEW WORK LIGHTING PLAN
114	E-402	12682068	ELECTRICAL ENLARGED NEW WORK POWER PLAN
115	E-601	12682069	ELECTRICAL 11.5 KV DISTRIBUTION WITH NEW SUBSTATION R1
116	E-602	12682070	ELECTRICAL SCHEDULES – NEW WORK
117	E-603	12682071	ELECTRICAL SCHEDULES – NEW WORK
118	E-604	12682072	ELECTRICAL SCHEDULES – NEW WORK

HAZARDOUS MATERIALS NOTES

1. THE CONTRACTOR SHALL ASSUME THE PRESENCE OF LEAD-BASED PAINT, ASBESTOS CONTAINING MATERIALS, ETC...IN THE WAREHOUSE.
2. ALL EXISTING PAINTED MATERIALS ARE ASSUMED TO BE COATED WITH LEAD-BASED PAINT. SEE SPECIFICATIONS SECTION 09 90 50 00 22 – PAINT REMOVAL AND CONTROLS.
3. ORIGINAL WALL PANELS ARE ASSUMED TO CONTAIN ASBESTOS. CUTTING OF PANELS REQUIRED FOR NEW OPENINGS SHALL BE PERFORMED IN ACCORDANCE WITH SPECIFICATION SECTION 02 82 16 00 22 – ENGINEERING CONTROL OF ASBESTOS CONTAINING MATERIALS.
4. DURING CONTRACT PERFORMANCE CONTRACTOR SHALL ENSURE THAT ALL APPLICABLE OSHA AND NAVY HEALTH REGULATIONS ARE COMPLIED WITH.
5. ALL NON-BULK HAZARDOUS WASTE (HW) GENERATED IN THE SHIPYARD WILL BE DISPOSED OF BY THE SHIPYARD'S EPA ID NUMBER AND DISPOSED OF IN CONTRACTOR-PROVIDED PERFORMANCE ORIENTED PACKAGES (POP), APPROVED BY THE ENVIRONMENTAL DEPARTMENT (CODE 106.321). PACKAGING EXCEPTIONS: BULK HW AND PCB WASTE WILL BE DISPOSED OF IN GOVERNMENT PROVIDED CONTAINERS.
6. UNDER NO CIRCUMSTANCES SHALL HW BE TRASFERRED TO OFF-YARD CONTRACTOR STORAGE; NOR SHALL HW BE STORED ON GOVERNMENT PROPERTY, BARGES, OR IN TANKS/VOIDS OTHER THAN ASSIGNED AND PROPERLY IDENTIFIED STORAGE AREAS.
7. CONTRACTOR SHALL PERFORM SAMPLING AND TESTING OF SUSPECT HAZARDOUS MATERIAL. ASSUME 25 SAMPLES AND 25 TESTS FOR BIDDING PURPOSES.

HAZARDOUS ENERGY CONTROL NOTES

1. ENSURE THE CONTROL OF HAZARDOUS ENERGY (LOCKOUT/TAGOUT) IS CONDUCTED IN ACCORDANCE WITH 29 CRF 1910.147, HAZARDOUS ENERGY CONTROL (HEC).

APPR | DATE | DESCRIPTION | SYM

NAVFAC

SEAL

A/E INFO

APPROVED
FOR RALPH DEAL 3/23/15
FOR COMMANDER NAVFAC

ACTIVITY
SATISFACTORY TO DATE 3-23-15
DES RMR | DRW RMR | CHK SWC
<<PM/DM>> R. M. RUSSELL
BRANCH MANAGER
ENGR DIRECTOR Ralph D. Deal
CUSTOMER

DEPARTMENT OF THE NAVY
NAVAL FACILITIES ENGINEERING COMMAND
PWD PORTSMOUTH
NAVAL FACILITIES ENGINEERING COMMAND ~ MID ATLANTIC
NORFOLK NAVAL SHIPYARD - PORTSMOUTH, VIRGINIA
NORFOLK NAVAL SHIPYARD
PORTSMOUTH, VIRGINIA

B260 EXTENSIVE REPAIRS

LIST OF DRAWINGS

SCALE: AS NOTED
EPROJECT NO.: 1146716
CONSTR CONTR. NO.: N40085-15-R-0018
NAVFAC DRAWING NO.: 12681957
SHEET 3 OF 118

G-003

DRAWFORM REVISION: 10 MARCH 2009

FILE NAME: P:\VA\NNSY\Buildings\0260\2011_1146716_Nuclear Materials Wipe Repairs\B_Design\Drawings\BLDG260-1146716-G-003.dwg LAYOUT NAME: G-003 PLOTTED: Monday, March 23, 2015 - 1:33pm USER: renee.russell

APPLICABLE CODES AND STANDARDS

STANDARD	TITLE	REVISION DATE
IBC	INTERNATIONAL BUILDING CODE	2012
UFC 1-200-01	GENERAL BUILDING REQUIREMENTS	01 JULY 2013
UFC 3-600-01	FIRE PROTECTION ENGINEERING FOR FACILITIES	01 MARCH 2013
UFC 3-600-10N	FIRE PROTECTION ENGINEERING	FINAL DRAFT AUG 2007
UFC 4-010-01	MINIMUM ANTITERRORISM STANDARDS FOR BUILDINGS	09 FEBRUARY 2012
UFC 4-021-01	DESIGN AND O&M: MASS NOTIFICATION SYSTEMS	JANUARY 2010
UFC 4-442-01	DESIGN: COVERED STORAGE	JANUARY 2004
NFPA 1	UNIFORM FIRE CODE	2012
NFPA 10	STANDARD – PORTABLE FIRE EXTINGUISHERS	2013
NFPA 13	STANDARD – INSTALLATION OF SPRINKLER SYSTEMS	2013
NFPA 20	STANDARD – INSTALLATION OF FIRE PUMPS	2013
NFPA 72	NATIONAL FIRE ALARM SIGNALING CODE	2013
NFPA 90A	STANDARD – AIR CONDITIONING AND VENTILATION	2015
NFPA 101	LIFE SAFETY CODE	2012

BUILDING DESCRIPTION

TYPE OF CONSTRUCTION	TYPE IIB
NUMBER OF STORIES	1
HEIGHT	54 FT
INTERIOR HIGH BAY CEILING HEIGHT	29.5 FT ABOVE FINISHED FLOOR
INTERIOR LOW BAYS CEILING HEIGHT	19 FT ABOVE FINISHED FLOOR

ALLOWABLE HEIGHT & AREA

	ALLOWED FOR GROUP S-1
BASIC ALLOWABLE HEIGHT (IBC TABLE 503)	2 STORY/55 FT
MAXIMUM ALLOWABLE HEIGHT (IBC §504.2	2 STORY/75 FT
PROVIDED HEIGHT	1 STORY/54 FT
UNLIMITED AREA BUILDINGS (IBC SECTION 507)	N/A
ACTUAL NUMBER OF FLOORS	1
AUTOMATIC FIRE SPRINKLER PROTECTION PROVIDED THROUGHOUT	YES
BUILDING SURROUNDED BY PUBLIC WAYS OR YARDS NOT LESS THAN 60 FEET IN WIDTH	YES
MAXIMUM ALLOWABLE AREA OF THE BUILDING PER IBC §507.3	UNLIMITED

OCCUPANCY CLASSIFICATIONS - INTERNATIONAL BUILDING CODE (IBC)

USE	OCCUPANCY PER IBC
WAREHOUSE AREA	MODERATE-HAZARD STORAGE GROUP S-1 (IBC §311.2)
OFFICE, LOCKER ROOM, RESTROOMS, WELDING SHOP & BREAK AREA	ACCESSORY USE (IBC §508.2)
ELECTRICAL, JANITORIAL, FIRE PUMP ROOM, ETC	INCIDENTAL ACCESSORY OCCUPANCIES (IBC TABLE 508.2.5)
DESIGN BASED UPON A GROUP S-1 OCCUPANCY WITH ACCESSORY AND INCIDENTAL ACCESSORY USE AREAS. FIRE RATED SEPARATIONS ARE NOT REQUIRED BY THE IBC (RATED SEPARATIONS REQUIRED BY UFC 3-600-01).	

FIRE RESISTANCE RATINGS

BUILDING ELEMENT OR AREA	RATING (HOURS)		
	REQUIRED	PROVIDED	CODE REF
STRUCTURAL FRAME	0	0	IBC TABLE 601
EXTERIOR WALLS	0	0	IBC TABLE 601
INTERIOR BEARING WALLS	0	0	IBC TABLE 601
INTERIOR NON-BEARING WALLS	0	0	NFPA 101
OCCUPANCY SEPARATION	1	1	IBC 508.4
ROOF CONSTRUCTION	0	0	IBC TABLE 601
FIRE PUMP ROOM	1	1	NFPA 20 TABLE 4.12.1.1.2
OFFICE, LOCKER ROOM & BREAK ROOM	1	1	UFC 3-600-01 §6-11.5
WELDING SHOP AREA AND CLEAN AREA	1	1	UFC 3-600-01 §6-11.5
TELECOMMUNICATIONS/ELECTRICAL ROOM	1	1	UFC 3-580-01, 2-2.11

OPENING PROTECTIVES

TYPE OF SEPARATION ASSEMBLY	RATING		
	REQUIRED	PROVIDED	CODE REF
FIRE RATED EXTERIOR EXIT DOORS (INCLUDING DOORS TO VESTIBULES SERVING EXTERIOR DOORS)	NOT REQUIRED	NOT PROVIDED	IBC TABLE 715.4 & NFPA 101 TABLE 8.3.4.2
FIRE RATED DOOR OPENINGS IN 1 HR FIRE BARRIERS, BETWEEN WAREHOUSE AND OFFICE, LOCKER ROOM, RESTROOMS, BREAK ROOM, CLEAN ROOM AND WELDING SHOP	45 MINUTES	45 MINUTES	IBC TABLE 715.4 & NFPA 101 TABLE 8.3.4.2
FIRE RATED DOOR OPENINGS NON-FIRE RATED WALLS	NOT REQUIRED	NOT PROVIDED	IBC TABLE 715.4
PROVISION OF PANIC AND FIRE EXIT HARDWARE ON EGRESS DOORS	NOT REQUIRED	NOT PROVIDED	NFPA 101 §7.2.1.7 & NFPA 101 §7.11.6
WINDOW OPENINGS IN 1 HR FIRE BARRIERS	45 MINUTES	45 MINUTES	IBC TABLE 715.5
DUCT PENETRATIONS	N/A	N/A	
NOTE 1: "DOORS ASSEMBLY" INCLUDES THE DOOR(S), FRAME, HARDWARE, AND OTHER RELATED ACCESSORIES.			
SEE ARCHITECTURAL DRAWINGS FOR LOCATIONS AND RATINGS OF DOOR AND WINDOW ASSEMBLIES			

OCCUPANCY CLASSIFICATIONS - NFPA 101 LIFE SAFETY CODE

USE	OCCUPANCY PER NFPA 101
WAREHOUSE AREA	STORAGE (NFPA 101 CHAPTER 42)
OFFICE, LOCKER ROOM, RESTROOMS, WELDING SHOP CLEAN AREA & BREAK AREA	INCIDENTAL (NFPA 101 §6.1.14.1.2)
ELECTRICAL, JANITORIAL, FIRE PUMP ROOM, ETC	INCIDENTAL (NFPA 101 §6.1.14.1.2)
DESIGN BASED UPON A GROUP S-1 OCCUPANCY WITH ACCESSORY AND INCIDENTAL ACCESSORY USE AREAS. FIRE RATED SEPARATIONS ARE NOT REQUIRED BY THE LSC (RATED SEPARATIONS AREA REQUIRED BY UFC 3-600-01).		

INTERIOR FINISHES

	REQUIRED	PROVIDED	CODE REF
WALL AND CEILING FINISHES			
EXIT ACCESS CORRIDORS	CLASS A OR B	N/A	
ALL OTHER AREAS	CLASS A, B OR C	CLASS A, B OR C	NFPA 101 §42.3.3.2
FLOOR FINISHES			
EXIT ACCESS CORRIDORS	CLASS I OR II	N/A	
ALL OTHER AREAS	NO REQUIREMENTS		NFPA 101 §42.3.3.3.2

FIRE PROTECTION

	REQUIRED	PROVIDED	CODE REF
FIRE SPRINKLER SYSTEM, WET PIPE	YES	YES	UFC 3-600-01, UFC 3-600-10N, NFPA 13
FIRE ALARM	YES	YES	UFC 3-600-01, UFC 3-600-10N, NFPA 72
FIRE ALARM/MASS NOTIFICATION	NO	NO	UFC 4-010-01 §2-3.6 & §1-9.1
MANUAL FIRE EXTINGUISHERS	YES	YES	NFPA 1 TABLE 13.6.2, NFPA 10
SEE FIRE PROTECTION DRAWINGS FOR DESIGN CRITERIA			
SEE ARCHITECTURAL DRAWINGS FOR FIRE EXTINGUISHER LOCATIONS			

MEANS OF EGRESS

	REQUIRED	PROVIDED	CODE REF
MINIMUM NUMBER OF EXITS *	2	2	NFPA 101 §2.4.1 & §7.4
MINIMUM WIDTH, EXIT DOORS	36 INCHES	36 INCHES	NFPA 101 §7.3.4
MAXIMUM COMMON PATH OF TRAVEL *	100 FT	*	NFPA 101 TABLE 42.2.5
MAXIMUM DEAD END *	100FT	*	NFPA 101 TABLE 42.2.5
MAXIMUM TRAVEL DISTANCE *	400 FT	*	NFPA 101 TABLE 42.2.5
ILLUMINATION	YES	YES	NFPA 101 §42.2.8 & 7.8
EMERGENCY LIGHTING	YES	YES	NFPA 101 §42.2.9 & 7.9
EXIT SIGNS	YES	YES	NFPA 101 §42.8.2.10 & 7.10
SEE ELECTRICAL DRAWINGS FOR ILLUMINATION, EMERGENCY LIGHTING, AND EXIT SIGNS			

OCCUPANT LOAD AND EGRESS CAPACITY

ASSIGNING A CALCULATED OCCUPANT LOAD TO A STORAGE OCCUPANCY IS NOT APPLICABLE TO WAREHOUSES BASED NFPA 101 TABLE 7.3.1.2. IN ACCORDANCE WITH NFPA 101 TABLE 7.3.1.2, & §42.1.7 THE OCCUPANT LOAD FOR STORAGE OCCUPANCIES IS BASED UPON MAXIMUM PROBABLE NUMBER OF OCCUPANTS PRESENT AT ANY TIME. THE END USER HAS CONFIRMED BUILDING 260 IS NEVER OCCUPIED BY MORE THAN 10 PEOPLE

LEVEL	OCCUPANT LOAD	EGRESS CAPACITY PROVIDED
1	10 PEOPLE	360 PEOPLE (TWO 36-INCH DOORS / 0.2 INCHES PER PERSON = 360)

APPR | DATE | DESCRIPTION | STM

NAVFAC

SEAL

A/E INFO

APPROVED
FOR COMMANDER NAVFAC 3/25/15

ACTIVITY
SATISFACTORY TO 3-25-15

DES: DPS | DRW: DPS | CHK: SLW
<<CPM/CMO>> R. M. RUSSELL
BRANCH MANAGER
ENGR DIRECTOR Ralph D. Deal
CUSTOMER

DEPARTMENT OF THE NAVY
NAVAL FACILITIES ENGINEERING COMMAND
PWD PORTSMOUTH

NAVAL FACILITIES ENGINEERING COMMAND ~ MID ATLANTIC
NORFOLK NAVAL SHIPYARD ~ PORTSMOUTH, VIRGINIA

NORFOLK NAVAL SHIPYARD
PORTSMOUTH, VIRGINIA

B260 EXTENSIVE REPAIRS

FIRE PROTECTION / LIFE SAFETY SUMMARY

SCALE: AS NOTED
EPROJECT NO.: 1146716
CONSTR. CONTR. NO. N40085-15-R-0018
NAVFAC DRAWING NO. 12681958
SHEET 4 OF 118

G-004

DRAWFORM REVISION: 10 MARCH 2009

FILE NAME: P:\VA\VNSY\Buildings\0260\2011_1146716_Nuclear Materials Whse Repairs\B_Design\Drawings\BLDG260-1146716-G-004 - 2010.dwg LAYOUT NAME: G-004 PLOTTED: Monday, March 23, 2015 - 3:43pm USER: douglas.stultz

SITE LINETYPE LEGEND

EXISTING	NEW	DESCRIPTION
A	**A**	COMPRESSED AIR
FW	**FW**	FRESH WATER
FO	**FO**	FUEL OIL
HPS	**HPS**	HIGH PRESSURE STEAM
LPS	**LPS**	LOW PRESSURE STEAM
G	**G**	NATURAL GAS
N2	**N2**	NITROGEN
OW	**OW**	OILY WASTE/ WASTE OIL
OHC	**OHC**	OVERHEAD COMMUNICATION
OHE	**OHE**	OVERHEAD ELECTRIC
O2	**O2**	OXYGEN
SW	**SW**	SALT WATER
SAN	**SAN**	SANITARY SEWER
COND	**COND**	STEAM CONDENSATE
SD	**SD**	STORM DRAIN
UGC	**UGC**	UNDERGROUND COMMUNICATION
UGE	**UGE**	UNDERGROUND ELECTRIC
		UNDERGROUND DUCT BANK
X X	**X X**	FENCE
XX XX	**XX XX**	HARDENED SECURITY FENCE
	X SF X	SILT FENCE
		UTILITY TO BE REMOVED

SITE SYMBOL LEGEND

EXISTING	NEW	DESCRIPTION
EC	C	COMMUNICATION MANHOLE
EE	E	ELECTRIC MANHOLE
ES	S	SANITARY MANHOLE
		STORM MANHOLE
		CONCRETE DEADMAN
		CONCRETE-FILLED BOLLARD
	H	DROP INLET
		FIRE HYDRANT
		LIGHT AND CROSS-ARM
		LIGHT POLE
		METER BOX
		MOORING BOLLARD
		MOORING CLEAT
		POWER CAPSTAN
		SIGN
		THRUST BLOCK
		UTILITY POLE
		UTILITY POLE GUY WIRE
		VALVE BOX
+101.00	+101.00	EDGE OF BITUMINOUS PAVEMENT
	+101.00	ELEVATION
	NEW / EXIST	ELEVATIONS
		PAVEMENT SLOPE
	P	PLUG
		BENCHMARK
		CONNECT TO EXISTING
		DISCONNECT FROM EXISTING
		ELEVATION
		SOIL BORING

CIVIL GENERAL NOTES

1. THE CONTRACTOR SHALL FIELD VERIFY ALL EXISTING DIMENSIONS AND CONDITIONS PRIOR TO BEGINNING CONSTRUCTION. ANY DISCREPANCIES BETWEEN FIELD CONDITIONS AND THE CONTRACT DRAWINGS SHALL BE BROUGHT TO THE ATTENTION OF THE CONTRACTING OFFICER.
2. ALL MATERIALS SHALL BE INSTALLED IN ACCORDANCE WITH MANUFACTURERS' SPECIFICATIONS. IF MANUFACTURERS' SPECIFICATIONS CONFLICT WITH CONTRACT DRAWINGS OR SPECIFICATIONS, THE CONTRACTING OFFICER SHALL BE NOTIFIED IMMEDIATELY.
3. GROUND WATER ELEVATION AT THE SITE SHALL BE ASSUMED TO BE EL 100.00'.
4. ELEVATIONS ARE BASED ON SHIPYARD DATUM AND TAKEN FROM BENCHMARK #389, ELEVATION 102.896, CUT ON SW CORNER OF EQUIPMENT FOUNDATION NEAR DOOR 9, WEST SIDE OF BUILDING NUMBER 510.
5. LIMITS OF WORK ARE SHOWN AND DIMENSIONED ON THE SITE PLAN. THE CONTRACTOR SHALL NOT PARK VEHICLES OR STORE CONSTRUCTION EQUIPMENT/MATERIALS OUTSIDE THE LIMITS OF WORK, EXCEPT IN THE ADDITIONAL CONTRACTOR LAYDOWN AREA SHOWN IN THE WORK LOCATION PLAN ON THIS SHEET.
6. WORK AREA AND LAYDOWN AREAS SHALL BE COORDINATED WITH THE CONTRACTING OFFICER PRIOR TO COMMENCEMENT OF THE WORK.
7. SEE DWG G-002 FOR PHASING INFORMATION AND LOCATION OF LAYDOWN AREAS.

SEDIMENT CONTROL NOTES

1. PROVIDE SEDIMENT FILTERS ON ALL INLETS WITHIN THE PROJECT LIMITS TO PREVENT FOREIGN MATERIAL FROM ENTERING THE STORM DRAINS. THE SEDIMENT FILTERS SHALL BE MAINTAINED IN GOOD CONDITION AND REPLACED WHEN SILTING PREVENTS DRAINAGE. UPON COMPLETION OF ALL PAVEMENT OPERATIONS AND PAINT STRIPING, REMOVE THE SEDIMENT FILTERS FROM THE STORM DRAINS.

SPECIAL EXCAVATION NOTES

1. THE LOCATION OF UTILITIES SHOWN HERE IN THESE DRAWINGS ARE APPROXIMATE BASED ON SHIPYARD RECORD DRAWINGS.
2. THE CONTRACTOR SHALL EXERCISE EXTREME CAUTION DURING DEMOLITION/EXCAVATION. LOCATION OF THE KNOWN EXISTING UTILITIES IS APPROXIMATE. THE CONTRACTOR SHALL PHYSICALLY VERIFY THE LOCATION AND ELEVATION OF ALL INDICATED EXISTING UTILITIES TO THE GREATEST EXTENT POSSIBLE PRIOR TO STARTING THE DEMOLITION AND/OR EXCAVATION PROCESS.
3. SCAN AND MARK UTILITIES PRIOR TO DEMOLITION/EXCAVATION. SCANNING SHALL BE PERFORMED WITH ELECTROMAGNETIC & ULTRASONIC DETECTION EQUIPMENT TO THE GREATEST EXTENT PRACTICABLE.
4. IF ADDITIONAL SUBSURFACE UTILITIES OTHER THAN THOSE INDICATED ARE DISCOVERED AT ANY TIME DURING THE EXECUTION OF WORK, IT SHALL IMMEDIATELY BE BROUGHT TO THE ATTENTION OF THE CONTRACTING OFFICER.
5. HAND DIG WITHIN 2 FEET OF EXISTING ADJACENT OR TRAVERSING UTILITIES AND STRUCTURES.
6. CONTRACTOR SHALL SUBMIT A "SUBSURFACE UTILITY LOCATION PLAN" FOR APPROVAL, AND RECEIVE WRITTEN APPROVAL, BY THE GOVERNMENT, PRIOR TO PERFORMING ANY EXCAVATION ACTIVITY. THE "SUBSURFACE UTILITY LOCATION PLAN" SHALL INCLUDE:
   - 6.1. A SCALED DRAWING OF AREA TO BE EXCAVATED IDENTIFYING THE SUBSURFACE UTILITIES LOCATED AND THE METHOD UTILIZED FOR ESTABLISHING HORIZONTAL LOCATION OF EACH UTILITY.
   - 6.2. ON THE DRAWING, THE DATE EACH UTILITY WAS LOCATED.
   - 6.3. ON THE DRAWING, ANY UTILITIES THAT REQUIRE AN OUTAGE AND THE PLANNED OUTAGE DATES SHALL BE INDICATED.
   - 6.4. ON THE DRAWING, INDICATE PLANNED HAND DIG LOCATIONS.

PAVEMENT NOTES

1. BITUMINOUS CONCRETE SHALL CONFORM TO VDOT RBS, SECTION 211, TYPE SM-12.5A. PROVIDE CRUSHED STONE AGGREGATE FOR THE MIX.
2. SUBBASE: VDOT, MATERIALS FOR CONSTRUCTION OF THE SUBBASE SHALL BE IN ACCORDANCE WITH DIVISION II, SECTION 208.
3. AGGREGATE BASE COURSE: VDOT, MATERIALS FOR CONSTRUCTION OF THE BASE COURSE SHALL BE IN ACCORDANCE WITH DIVISION II, SECTION 208.
4. SURFACE COURSE: VDOT, MATERIALS FOR CONSTRUCTION OF THE SURFACE COURSE SHALL BE IN ACCORDANCE WITH DIVISION II, SECTION 211.
5. AGGREGATE BASE COURSE SHALL CONFORM TO VIRGINIA DEPARTMENT OF TRANSPORTATION (VDOT), ROAD AND BRIDGE SPECIFICATIONS, LATEST EDITION DIVISION II, SECTION 208.
6. CONTRACTOR SHALL ENSURE THAT PAVEMENT SUBGRADES HAVE BEEN INSPECTED AND APPROVED BY THE CONTRACTING OFFICER PRIOR TO CONCRETE PLACEMENT.
7. PROTECT NEWLY GRADED AREAS FROM TRAFFIC, EROSION AND SETTLEMENTS THAT MAY OCCUR. REPAIR OR RE-ESTABLISH ALL DAMAGED AREAS TO ORIGINAL CONDITION.
8. PROVIDE PAINT STRIPING IN ACCORDANCE WITH VDOT [VIRGINIA DEPARTMENT OF TRANSPORTATION, ROAD AND BRIDGE SPECIFICATIONS] RBS, LATEST EDITION, DIVISION II, SECTION 231, "PAINT." ALLOW BITUMINOUS PAVEMENT TO CURE FOR AT LEAST 21 DAYS BEFORE PAINT IS APPLIED. PAVEMENT SHALL BE THOROUGHLY CLEAN AND ENTIRELY FREE OF LOOSE SAND, STONES, DUST, OIL, GREASE, WATER, AND OTHER SUBSTANCES THAT WILL BE DELETERIOUS TO THE PAINT OR WILL ADVERSELY AFFECT THE ADHESION OF THE PAINT. DO NOT APPLY PAINT DURING HIGH WIND (OVER 15 MILES PER HOUR) OR HIGH HUMIDITY (OVER 70 PERCENT). APPLY PAINT ONLY WHEN AMBIENT TEMPERATURE IS 40 DEGREES F OR ABOVE AND RISING BUT NOT MORE THAN 95 DEGREES F. DIMENSIONS AND ARRANGEMENT OF STRIPING SHALL BE AS INDICATED. APPLY PAINT TO A WET FILM THICKNESS 0.015 INCH BY MEANS OF CONVENTIONAL TRAFFIC LINE STRIPING EQUIPMENT. TRAFFIC SHALL NOT BE PERMITTED TO USE THE PAINTED AREAS FOR A MINIMUM OF 30 MINUTES AFTER PAINTING OF LINES HAS BEEN COMPLETED.

APPR | DATE | DESCRIPTION | SYM

NAVFAC

SEAL

A/E INFO

APPROVED
FOR RALPH DEAL 3/23/15
FOR COMMANDER NAVFAC

ACTIVITY
SATISFACTORY TO DATE 3-24-15

DES	GTF	DRW	GTF	CHK	JJC

<<PM/EMO>> R. M. RUSSELL
BRANCH MANAGER J.A.J
ENGR DIRECTOR Ralph D. Deal
CUSTOMER

DEPARTMENT OF THE NAVY
NAVAL FACILITIES ENGINEERING COMMAND
PWD PORTSMOUTH

NAVAL FACILITIES ENGINEERING COMMAND – MID ATLANTIC
NORFOLK NAVAL SHIPYARD – PORTSMOUTH, VIRGINIA

NORFOLK NAVAL SHIPYARD
PORTSMOUTH, VIRGINIA

B260 EXTENSIVE REPAIRS

GENERAL CIVIL NOTES AND ABBREVIATIONS

SCALE:	AS NOTED
EPROJECT NO.:	1146716
CONSTR. CONTR. NO.	N40085-15-R-0018
NAVFAC DRAWING NO.	12681959
SHEET	5 OF 118

C-001

DRAWFORM REVISION: 10 MARCH 2009

FILE NAME: P:\VA\VNSY\Buildings\0260\2011_1146716_Nuclear Materials Whse Repairs\B_Design\Drawings\BLDG260-1146716-C-001.dwg LAYOUT NAME: C-001 PLOTTED: Tuesday, March 17, 2015 - 7:32am USER: garry.ferrari

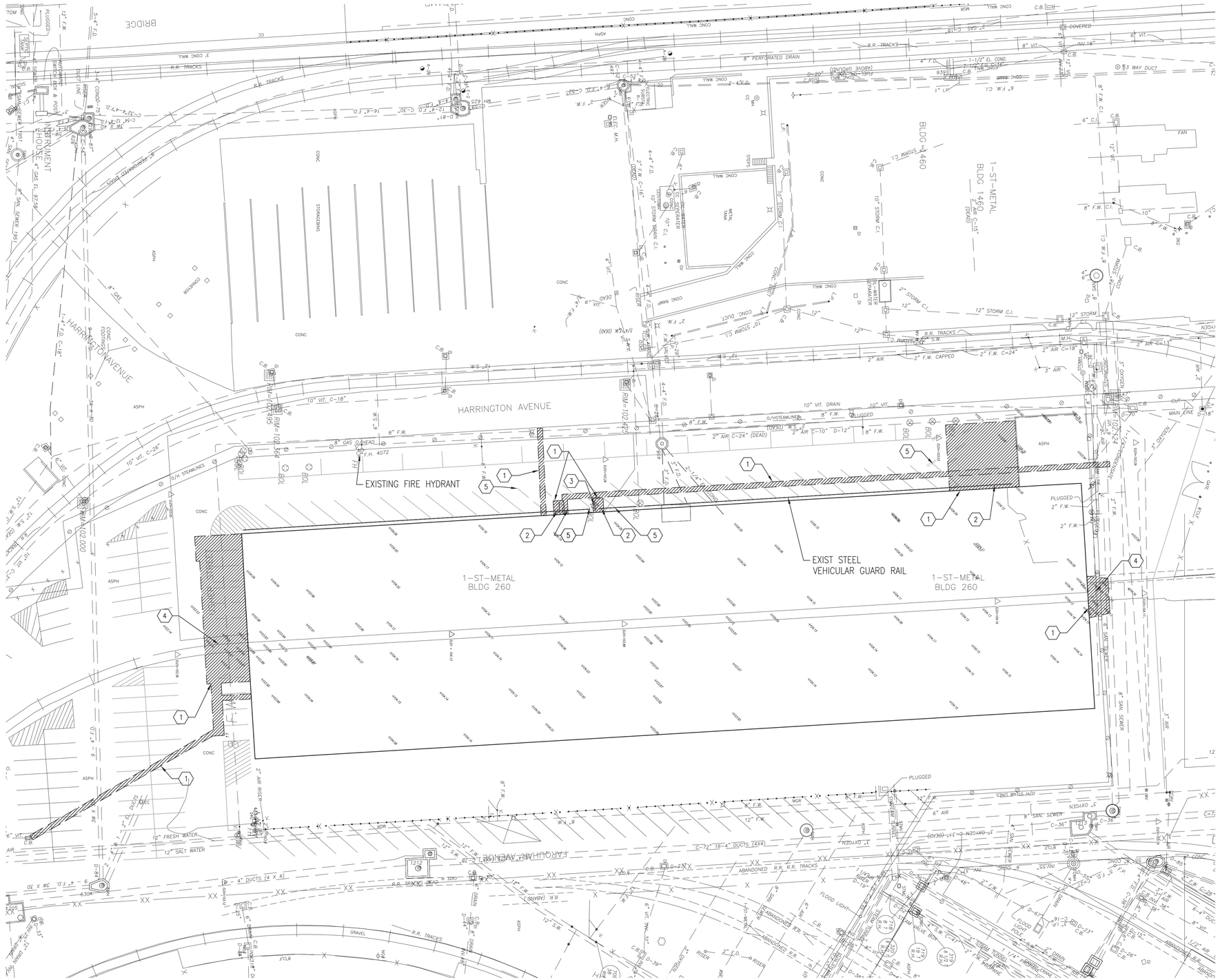

SITE DEMOLITION PLAN

1" = 30'-0"

DEMOLITION KEYNOTES

1. DEMOLISH EXISTING CONC PAVEMENT. SAWCUT TO 3" DEPTH AT LIMITS OF DEMOLITION.
2. REMOVE AND SALVAGE PORTIONS OF THE EXISTING STEEL VEHICULAR GUARD RAIL. CUT EXIST ANCHOR BOLTS FLUSH WITH SURFACE OF EXIST CONC PAVEMENT.
3. DEMOLISH EXIST STEEL BOLLARDS (2 EACH).
4. DEMOLISH EXIST STEEL RAILROAD TRACKS (37 L.F.).
5. DEMOLISH EXIST 4" WIDE PAVEMENT MARKINGS.

SCALE

1"=30' 0' 30' 60'

APPR	DATE	DESCRIPTION	SYM

NAVFAC

SEAL

A/E INFO

APPROVED
FOR RALPH DEAL 3/23/15
FOR COMMANDER NAVFAC

ACTIVITY
SATISFACTORY TO DATE 3-24-15

DES	GTF	DRW	GTF	CHK	JJC

<<PM/DM>> R. M. RUSSELL
BRANCH MANAGER J.A.J
ENGR DIRECTOR Ralph D. Deal
CUSTOMER

DEPARTMENT OF THE NAVY
NAVAL FACILITIES ENGINEERING COMMAND
PWD PORTSMOUTH

NAVAL FACILITIES ENGINEERING COMMAND ~ MID ATLANTIC
NORFOLK NAVAL SHIPYARD ~ PORTSMOUTH, VIRGINIA

NORFOLK NAVAL SHIPYARD
PORTSMOUTH, VIRGINIA

B260 EXTENSIVE REPAIRS

SITE DEMOLITION PLAN

SCALE: AS NOTED
EPROJECT NO.: 1146716
CONSTR. CONTR. NO. N40085-15-R-0018
NAVFAC DRAWING NO. 12681960
SHEET 6 OF 118

CD-101

DRAWFORM REVISION: 10 MARCH 2009

FILE NAME: P:\VA\NNSY\Buildings\02601\2011_1146716_Nuclear Materials Wise Repairs\B_Design\Drawings\BLDG2601-1146716-CD-101.dwg LAYOUT NAME: CD-101 PLOTTED: Tuesday, March 17, 2015 - 7:51pm USER: garry.ferrari

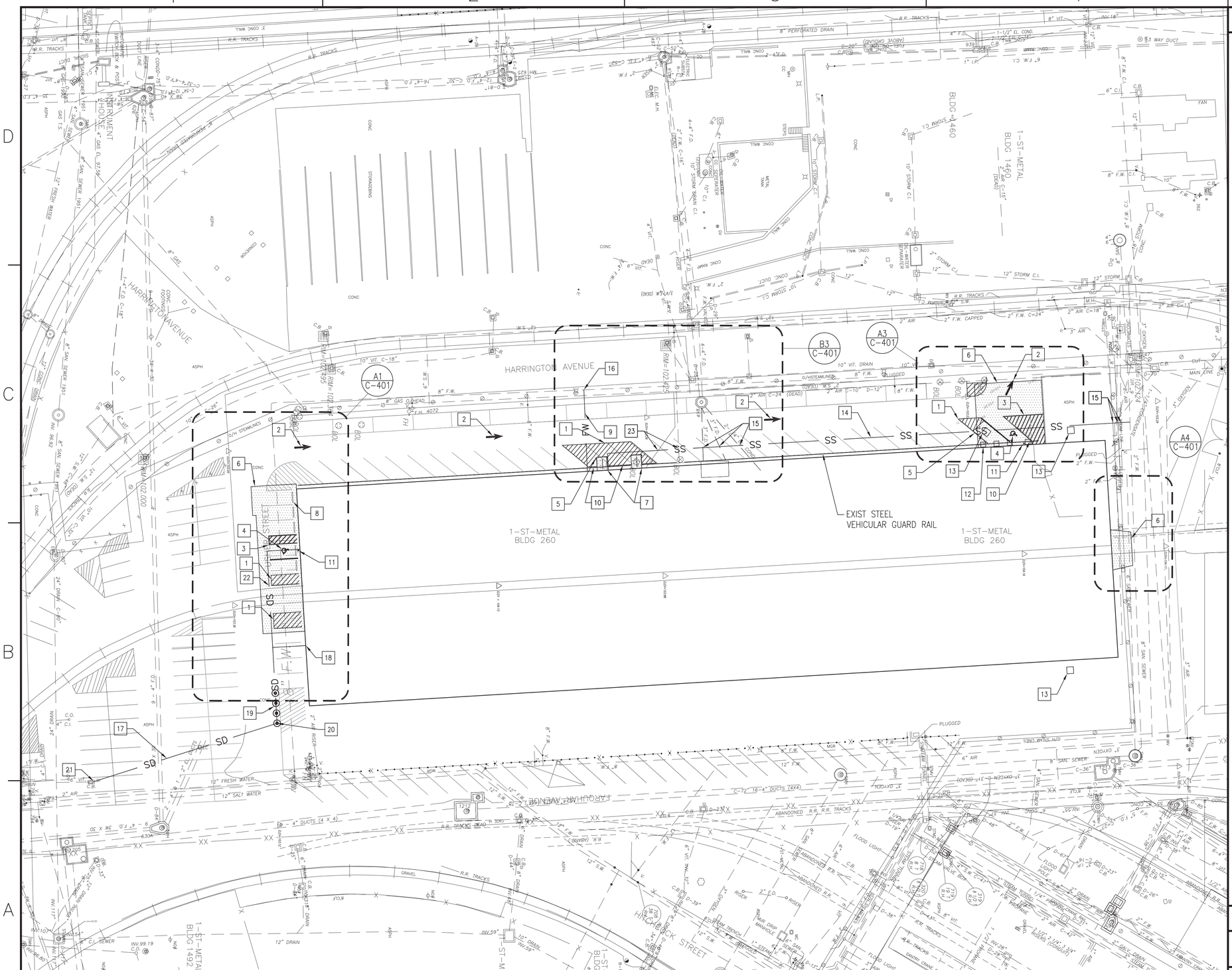

NEW WORK KEYNOTES

1. PROVIDE 4" WIDE YELLOW PAVEMENT STRIPING (TYP).
2. PROVIDE YELLOW PAINTED STRAIGHT ARROW PAVEMENT MARKING. SEE DETAIL A2/C-501
3. PROVIDE 4" WIDE BLUE PAVEMENT STRIPING (TYP).
4. PROVIDE BLUE HANDICAP PARKING SYMBOL – SEE DETAIL A3/C-501
5. PROVIDE 4" DIAMETER SCH 40 STEEL BOLLARDS (4 REQ'D).
6. PROVIDE NEW BITUMINOUS PAVEMENT – SEE PAVEMENT NOTES C-001.
7. PROVIDE NEW CONC RAMP ON 6" OF SELECT FILL WITH #5 AT 12" OC REINFORCING EW (2 REQ'D). BOTT OF CONC EL = 103.59'. PROVIDE ⅜" THICK PREMOLDED JOINT FILLER IN BETWEEN EXIST CONC PAVEMENT TO REMAIN AND NEW CONC RAMP.
8. PROVIDE PRECAST CONCRETE WHEEL STOPS (5 REQ;D).
9. PROVIDE 10" DI WATERLINE. 3' MINIMUM COVER FROM TOP OF PIPE TO FINISH GRADE. SAW CUT ASPHALT, EXCAVATE, BACKFILL AND REPAIR PAVEMENT. SEE TRENCHING DETAIL SHEET C-501.
10. MODIFY EXIST STEEL GUARD RAIL – SEE DETAIL ON SHEET NO. C-502.
11. PROVIDE HANDICAP SIGN – SEE DETAIL A1/C-501.
12. 3'-0" X 3'-0" X 12" THICK CONC FOUNDATION WITH 6 #5 BARS EACH WAY. TOP OF CONC EL SHALL BE 2" BELOW FINISH PAVEMENT EL. COORDINATE LAYOUT OF FOUNDATIONS WITH EXISTING VEHICULAR GUARD RAIL TO BE SALVAGED. (4 REQ'D)
13. PROVIDE CONCRETE EQUIPMENT PAD FOR CONDENSING UNIT.
14. PROVIDE 322' OF 4" DI SEWER @ 0.5% MINIMUM SLOPE . APPROXIMATE OUTFALL INVERT = 98.52. PROVIDE A TEE CONNECTION TO THE EXISTING LINE. PROVIDE A CLEANOUT AT THE BEND. CONTRACTOR TO VERIFY ELEVATIONS OF ALL UTILITY CROSSINGS PRIOR TO INSTALLING SEWER. SAW CUT ASPHALT, EXCAVATE, BACKFILL AND REPAIR PAVEMENT. SEE TRENCHING DETAIL SHEET C-501.
15. SANITARY LINE CROSSING. CONTRACTOR TO VERIFY ELEVATION. DEAD LINES INCLUDE 2" AIR, 2" WATER, 6" VITREOUS CLAY STORM DRAIN, TWO 3" F.D. AND THE TWO 1½ ELE. COND. CONTRACTOR TO VERIFY LINES ARE NOT IN USE.
16. PROVIDE 8"X8"X10" DI TEE
17. PROVIDE 117' OF 4" DI STORM DRAIN @ 0.68%. SAW CUT ASPHALT, EXCAVATE, BACKFILL AND REPAIR PAVEMENT. SEE TRENCHING DETAIL SHEET C-501.
18. PROVIDE 20' OF 4" DI PIPE FROM BUILDING INV=102.00. CONNECT BOTH 4" CONDENSATE LINES WITH A TEE. PROVIDE 27' OF 8" DI LINE FROM TEE TO CONDENSATE WELL INV=101.00
19. CONDENSATE COOLING WELL SEE DETAIL A1 ON SHEET C-401 AND DETAIL C1 ON SHEET M-501.
20. CONDENSATE COOLING WELL 4" OUTFALL INV = 100.00
21. TIE 4" DI STORM DRAIN INTO EXISTING CATCH BASIN INV 99.20
22. PROVIDE 77' OF 4" DI PIPE FROM BUILDING INV = 102.00 TO THE COOLING WELL INV = 101.00. PROVIDE CLEANOUT AT 90° BEND. SAW CUT ASPHALT, EXCAVATE, BACKFILL AND REPAIR PAVEMENT. SEE TRENCHING DETAIL SHEET C-501.
23. SANITARY LINE CROSSING. CONTRACTOR TO VERIFY ELEVATION.

GENERAL SHEET NOTES

1. SEE SHEET G-002 FOR LOCATION OF CONTRACTOR LAYDOWN AREA.

SCALE

1"=30' 0' 30' 60'

APPR	DATE	DESCRIPTION	SYM

NAVFAC

SEAL

A/E INFO

APPROVED
FOR COMMANDER NAVFAC
3/23/15

ACTIVITY

SATISFACTORY TO DATE 3-23-15

DES	GTF	DRW	GTF	CHK	JJC

<<PM/DM>> R. M. RUSSELL
BRANCH MANAGER JAJ
ENGR DIRECTOR Ralph D. Deal
CUSTOMER

DEPARTMENT OF THE NAVY
NAVAL FACILITIES ENGINEERING COMMAND
PWD PORTSMOUTH

NAVAL FACILITIES ENGINEERING COMMAND ~ MID ATLANTIC
NORFOLK NAVAL SHIPYARD ~ PORTSMOUTH, VIRGINIA

NORFOLK NAVAL SHIPYARD
PORTSMOUTH, VIRGINIA

B260 EXTENSIVE REPAIRS

SITE PLAN

SCALE: AS NOTED
EPROJECT NO.: 1146716
CONSTR. CONTR. NO. N40085-15-R-0018
NAVFAC DRAWING NO. 12681961
SHEET 7 OF 118

C-101

DRAWFORM REVISION: 10 MARCH 2009

FILE NAME: P:\VA\NNSY\Buildings\0260\2011_1146716_Nuclear Materials Wash Repairs\B_Design\Drawings\B0260-1146716-C-101.dwg LAYOUT NAME: C-101 PLOTTED: Tuesday, March 17, 2015 - 7:52am USER: garry.ferrari

PLAN AT SOUTH ENTRY
SCALE: 1" = 10'-0"
C-101 A1

PLAN AT PUMP, ELECTRICAL, AND WELDING ROOM ENTRIES
SCALE: 1" = 10'-0"
C-101 B3

GENERAL SHEET NOTES

1. SEE SHEET C-101 FOR NEW WORK KEYNOTES 1-23.

24. PROVIDE 10" SCH 80 WELDED GALV'D STEEL PIPE VENT WITH GOOSENECK. SEE DETAIL ON SHEET M-501.

25. PROVIDE 4" DIAMETER SCH 40 STEEL BOLLARDS IN A 2' GRID CENTERED AROUND THE GOOSENECK. (4 REQ'D)

SCALE

1"=10' 0' 10' 20'

PLAN AT MAIN ENTRY
SCALE: 1" = 10'-0"
C-101 A3

PLAN AT NORTH OVERHEAD DOOR ENTRY
SCALE: 1" = 10'-0"
C-101 A4

SYM	DESCRIPTION	DATE	APPR

SEAL

A/E INFO

APPROVED: [signature] 3/23/15 FOR RALPH DEAL
FOR COMMANDER NAVFAC

ACTIVITY: [signature]
SATISFACTORY TO | DATE 3-23-15

DES	GTF	DRW	GTF	CHK	JJC
<<PM/DM>>	R. M. RUSSELL				
BRANCH MANAGER	JAJ				
ENGR DIRECTOR	Ralph D. Deal				
CUSTOMER	[signature]				

DEPARTMENT OF THE NAVY
NAVAL FACILITIES ENGINEERING COMMAND
NAVAL FACILITIES ENGINEERING COMMAND ~ MID ATLANTIC
PWD PORTSMOUTH
NORFOLK NAVAL SHIPYARD - PORTSMOUTH, VIRGINIA
NORFOLK NAVAL SHIPYARD
PORTSMOUTH, VIRGINIA

B260 EXTENSIVE REPAIRS

LARGE SCALE SITE PLANS

SCALE:	AS NOTED
EPROJECT NO.:	1146716
CONSTR. CONTR. NO.	N40085-15-R-0018
NAVFAC DRAWING NO.	12681962
SHEET	8 OF 118

C-401

DRAWFORM REVISION: 10 MARCH 2009

FILE NAME: P:\VA\NNSY\Buildings\0260\2011_1146716_Nuclear Materials Whse Repairs\B_Design\Drawings\BLDG260-1146716-C-401.dwg LAYOUT NAME: C-401 PLOTTED: Tuesday, March 17, 2015 - 7:56am USER: garry.ferrari

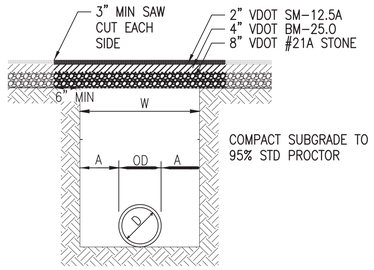

MAXIMUM TRENCH WIDTH "W" TAKEN AT TOP OF PIPE 12" MAXIMUM "A"

NOTE: PROVIDE BEDDING IN ACCORDANCE WITH THE SPECIFICATIONS.

TYPICAL PAVEMENT/TRENCH SECTION — C1

NOT TO SCALE

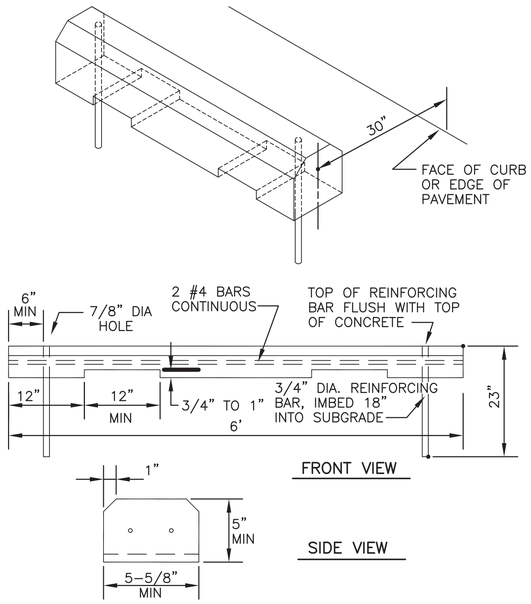

PARKING BUMPER — C2

(PRECAST CONCRETE)
NOT TO SCALE

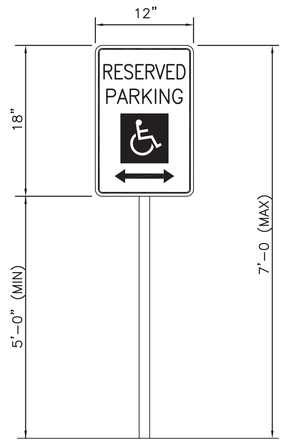

HANDICAP SIGN — A1

NOT TO SCALE

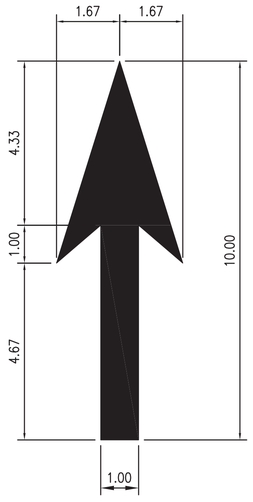

STRAIGHT ARROW — A2

NOT TO SCALE

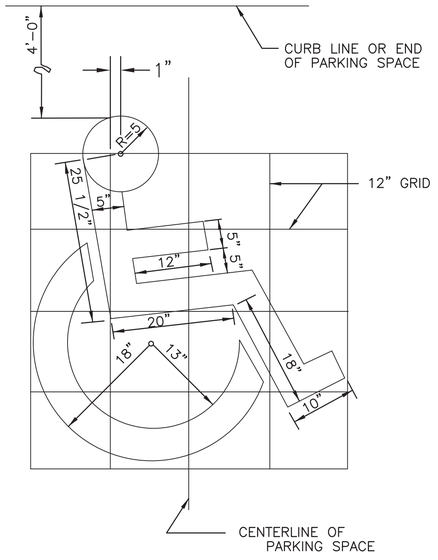

HANDICAP PARKING SYMBOL — A3

NOT TO SCALE

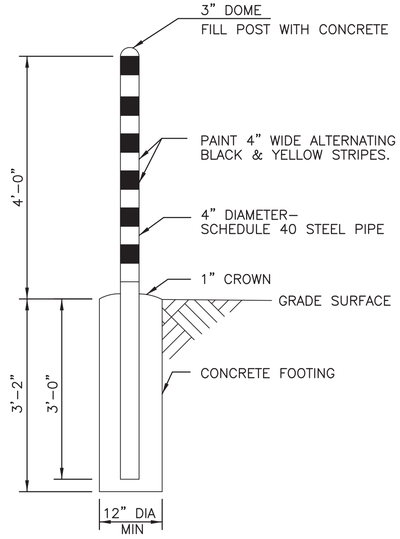

GUARD POST — A4

NOT TO SCALE

SYM	DESCRIPTION	DATE	APPR

SEAL

A/E INFO

APPROVED
FOR RALPH DEAL 3/23/15
FOR COMMANDER NAVFAC

ACTIVITY
SATISFACTORY TO DATE 3-24-15

DES	GTF	DRW	GTF	CHK	JJC
<<PM/DM>>	R. M. RUSSELL				
BRANCH MANAGER	J.A.J				
ENGR DIRECTOR	Ralph D. Deal				
CUSTOMER					

DEPARTMENT OF THE NAVY
NAVAL FACILITIES ENGINEERING COMMAND
PWD PORTSMOUTH

NAVAL FACILITIES ENGINEERING COMMAND – MID ATLANTIC
NORFOLK NAVAL SHIPYARD – PORTSMOUTH, VIRGINIA

NORFOLK NAVAL SHIPYARD
PORTSMOUTH, VIRGINIA

B260 EXTENSIVE REPAIRS

CIVIL DETAILS

SCALE:	AS NOTED
EPROJECT NO.:	1146716
CONSTR. CONTR. NO.	N40085-15-R-0018
NAVFAC DRAWING NO.	12681963
SHEET	9 OF 118

C-501

DRAWFORM REVISION: 10 MARCH 2009

FILE NAME: P:\VA\VNSY\Buildings\0260\2011_1146716_Nuclear Materials Whse Repairs\B_Design\Drawings\BLDG260-1146716-C-501.dwg LAYOUT NAME: C-501 PLOTTED: Tuesday, March 17, 2015 - 7:57am USER: garry.ferrari

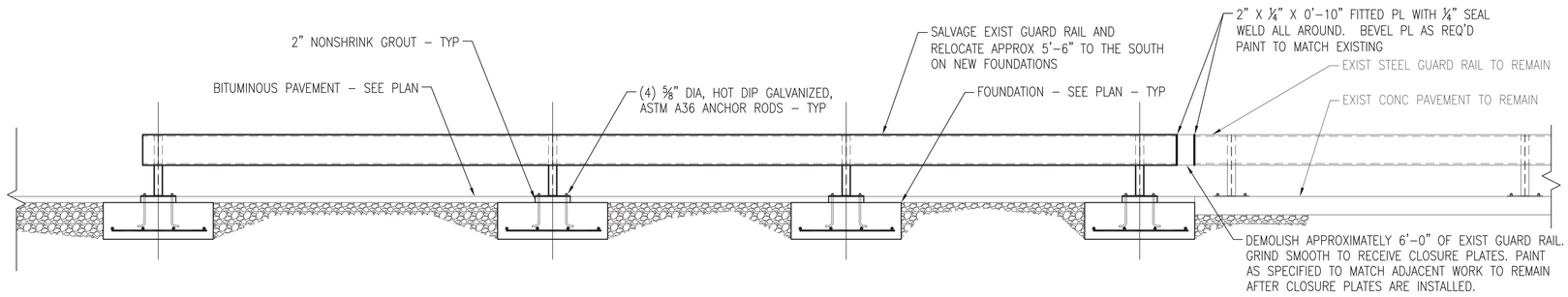

GUARD RAIL ELEVATION AT ENTRY

SCALE: 1/2" = 1'-0"

C-401 C1

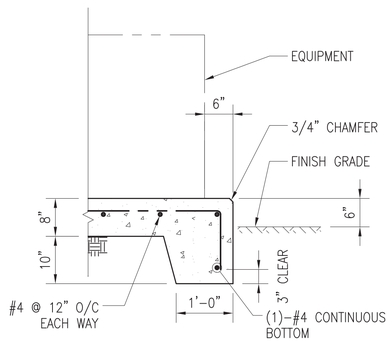

TYPICAL SMALL CONDENSER UNIT PAD DETAIL

NOT TO SCALE

A1

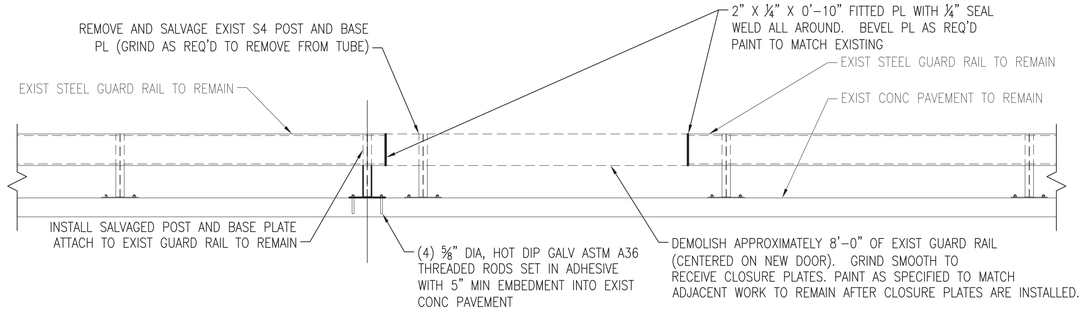

GUARD RAIL ELEVATION AT ENTRY

SCALE: 1/2" = 1'-0"

C-401 A3

SYM	DESCRIPTION	DATE	APPR

NAVFAC

SEAL

A/E INFO

APPROVED
FOR RALPH DEAL 3/23/15
FOR COMMANDER NAVFAC

ACTIVITY
SATISFACTORY TO DATE 3-23-15
DES GTF DRW GTF CHK JJC
<<PM/DM>> R. M. RUSSELL
BRANCH MANAGER JAJ
ENGR DIRECTOR Ralph D. Deal
CUSTOMER

DEPARTMENT OF THE NAVY
NAVAL FACILITIES ENGINEERING COMMAND
PWD PORTSMOUTH
NAVAL FACILITIES ENGINEERING COMMAND ~ MID ATLANTIC
NORFOLK NAVAL SHIPYARD – PORTSMOUTH, VIRGINIA
NORFOLK NAVAL SHIPYARD
PORTSMOUTH, VIRGINIA

B260 EXTENSIVE REPAIRS

CIVIL DETAILS

SCALE: AS NOTED
EPROJECT NO.: 1146716
CONSTR. CONTR. NO. N40085-15-R-0018
NAVFAC DRAWING NO. 12681964
SHEET 10 OF 118

C-502

DRAWFORM REVISION: 10 MARCH 2009

FILE NAME: P:\VA\NNSY\Buildings\0260\2011_1146716_Nuclear Materials Whse Repairs\B_Design\Drawings\BLDG260-1146716-C-502.dwg LAYOUT NAME: C-502 PLOTTED: Tuesday, March 17, 2015 – 7:58am USER: garry.ferrari

PROJECT NOTES

1. THE STRUCTURAL DRAWINGS SHALL BE USED IN CONJUNCTION WITH THE ARCHITECTURAL, CIVIL, PLUMBING, MECHANICAL, ELECTRICAL, AND FIRE PROTECTION DRAWINGS, AND THE SPECIFICATIONS. THE CONTRACTOR SHALL VERIFY THE REQUIREMENTS OF OTHER TRADES AS TO SLEEVES, CHASES, HANGERS, INSERTS, ANCHORS, HOLES, AND ADDITIONAL ITEMS TO BE PLACED OR SET IN THE STRUCTURAL WORK.

2. ALL ITEMS NOTED TO BE DEMOLISHED OR REMOVED SHALL BECOME THE PROPERTY OF THE CONTRACTOR AND SHALL BE REMOVED FROM GOVERNMENT PROPERTY, UNLESS OTHERWISE SPECIFIED. DISPOSITION OF THE ITEMS/MATERIALS IS THE RESPONSIBILITY OF THE CONTRACTOR AND SHALL ADHERE TO ALL APPLICABLE FEDERAL, STATE, AND LOCAL REGULATIONS.

3. THIS STRUCTURE HAS BEEN DESIGNED IN ACCORDANCE WITH THE PROVISIONS OF THE INTERNATIONAL BUILDING CODE 2009 EDITION, AS MODIFIED BY UFC 3-301-01 (WITH CHANGE NO. 3 DATED JANUARY 31, 2012) AND UFC-1-200-1 (WITH CHANGE NO. 2 DATED JANUARY 28, 2011).

4. THE CONTRACTOR SHALL FIELD VERIFY THE DIMENSIONS, ELEVATIONS, AND OTHER REQUIREMENTS NECESSARY FOR THE PROPER CONSTRUCTION AND ALIGNMENT OF THE NEW PORTIONS OF THE STRUCTURE TO THE EXISTING. THE CONTRACTOR SHALL MAKE ALL MEASUREMENTS NECESSARY FOR FABRICATION AND ERECTION OF STRUCTURAL MEMBERS. DISCREPANCIES SHALL BE BROUGHT TO THE ATTENTION OF THE CONTRACTING OFFICER PRIOR TO ORDERING MATERIALS OR BEGINNING WORK (CONSTRUCTION OR DEMOLITION).

5. FOUNDATIONS FOR THIS STRUCTURE HAVE BEEN DESIGNED FOR A BEARING PRESSURE OF 1500 PSF.

6. SEE DWG G-002 FOR PHASING INFORMATION.

SPECIAL EXCAVATION NOTE

1. THE CONTRACTOR SHALL EXERCISE EXTREME CAUTION DURING DEMOLITION/EXCAVATION. LOCATION OF THE KNOWN EXISTING UTILITIES IS APPROXIMATE. THE CONTRACTOR SHALL PHYSICALLY VERIFY THE LOCATION AND ELEVATION OF ALL INDICATED EXISTING UTILITIES TO THE GREATEST EXTENT POSSIBLE PRIOR TO STARTING THE DEMOLITION AND/OR EXCAVATION PROCESS. THE CONTRACTOR SHALL ALSO SCAN THE CONSTRUCTION SITE WITHIN THE NECESSARY LIMITS OF DEMOLITION/EXCAVATION WITH ELECTROMAGNETIC AND SONIC EQUIPMENT IN ORDER TO IDENTIFY THE PRESENCE AND LOCATION OF ALL KNOWN AND UNKNOWN EXISTING UTILITIES PRIOR TO STARTING THE DEMOLITION/EXCAVATION PROCESS. THE CONTRACTOR SHALL MARK THE SURFACE OF THE GROUND WHERE SUBSURFACE UTILITIES ARE LOCATED. IF ADDITIONAL SUBSURFACE UTILITIES OTHER THAN THOSE INDICATED ARE DISCOVERED AT ANY TIME DURING THE EXECUTION OF WORK, IT SHALL IMMEDIATELY BE BROUGHT TO THE ATTENTION OF THE CONTRACTING OFFICER.

CONCRETE NOTES

1. THE EXISTING SLAB SHALL BE THOROUGHLY PREPARED AND CLEANED IN ADVANCE OF THE PLACEMENT OF THE CONCRETE OVERLAY AS FOLLOWS:

   1.1. VACUUM AND/OR BROOM CLEAN THE ENTIRE INTERIOR CONCRETE SLAB SURFACE, INCLUDING THE REMOVAL OF ALL DEBRIS IN THE FLANGEWAY OF THE EXISTING RAILROAD AND ANY OTHER CREVISES IN THE EXISTING CONCRETE SLAB. REMOVAL OF EXISTING JOINT FILLER MATERIAL IS NOT REQUIRED.

   1.2. THOROUGHLY CLEAN THE ENTIRE SLAB SURFACE, EXCEPT AREAS THAT ARE SCHEDULED TO RECEIVE A VAPOR BARRIER PRIOR TO CONCRETE PLACEMENT. CLEANING SHALL USE HIGH PRESSURE WATER BLAST CLEANING AND/OR DETERGENT WATER CLEANING IN ACCORDANCE WITH ASTM E1575-12 AND ASTM D4258-05. CLEANING SHALL PRODUCE A SURFACE THAT IS FREE OF OIL, GREASE, LOOSELY ADHERING CONCRETE, AND OTHER CONTAMINATION.

   1.3. AT AREAS OF THE EXISTING SLAB THAT HAVE EXISTING PAINT OR SIMILAR SURFICIAL COATINGS APPLIED, INCREASE THE WATER PRESSURE AS NECESSARY TO COMPLETELY REMOVE THE SURFICIAL COATINGS.

2. THE EXISTING CONCRETE SLAB SHALL BE WETTED 24 HOURS MINIMUM PRIOR TO CONCRETE PLACEMENT. EXISTING CONCRETE SHALL BE KEPT WET FOR THE ENTIRE 24 HOUR PERIOD WITH IMPERVIOUS SHEETING AND, IF NECESSARY, ADDITIONAL SPRAYING. REMOVE IMPERVIOUS SHEETING AND ANY STANDING WATER FROM EXISTING CONCRETE SLAB PRIOR TO PLACING FRESH CONCRETE.

3. CEMENT SHALL CONFORM TO ASTM C150, TYPE I OR II. CONCRETE SHALL CONFORM TO ACI 211.1, ACI 301, ACI 304R (WHEN PUMPING), AND ACI 318-11 WITH THE FOLLOWING PROPERTIES: CONCRETE COMPRESSIVE STRENGTH SHALL BE 4000 PSI MINIMUM AT 28 DAYS, AGGREGATE SHALL CONFORM TO ASTM C33 AND COARSE AGGREGATE SHALL BE SIZE NUMBER 67, RANGE OF SLUMP SHALL BE 1-3 INCHES, WATER-TO-CEMENT RATIO SHALL BE 0.45 MAXIMUM BY WEIGHT, AND AIR ENTRAINMENT (EXCEPT FOR STEEL TROWELED FINISHES) SHALL BE 7% ±1.5% (ASTM C260). CONCRETE SLABS TO RECEIVE STEEL TROWEL FINISH SHALL NOT BE AIR ENTRAINED (AIR CONTENT OF 3% ±1.5% PER ASTM C260). SUBMIT COPIES OF TEST REPORTS SHOWING THAT THE MIX HAS BEEN SUCCESSFULLY TESTED TO PRODUCE CONCRETE WITH THE PROPERTIES SPECIFIED. TEST REPORTS SHALL BE SUBMITTED ALONG WITH MIX DESIGN TO CONTRACTING OFFICER FOR APPROVAL PRIOR TO CONCRETE PLACEMENT. VAPOR BARRIER SHALL CONFORM TO ASTM E1745, CLASS A.

4. CONCRETE SHALL BE CURED USING ASTM D4397 POLYETHYLENE SHEETING IN ACCORDANCE WITH ASTM C171. WET THE ENTIRE EXPOSED SURFACE OF THE CONCRETE THOROUGHLY WITH A FINE SPRAY OF WATER AND COVER WITH SHEETING THROUGHOUT THE CURING PERIOD. LAY SHEETING DIRECTLY ON CONCRETE SURFACE. PROVIDE SHEETING NOT LESS THAN 18 INCHES WIDER THAN THE AREA TO BE CURED. OVERLAP EDGES 12 INCHES AND CONTINUOUSLY TAPE JOINTS.

5. CONCRETE PUMPING (IF USED) SHALL NOT RESULT IN SEPARATION OR LOSS OF MATERIALS NOR CAUSE INTERRUPTIONS SUFFICIENT TO PERMIT LOSS OF PLASTICITY BETWEEN SUCCESSIVE INCREMENTS. LOSS OF SLUMP IN PUMPING EQUIPMENT SHALL NOT EXCEED 2 INCHES. CONCRETE SHALL NOT BE CONVEYED THROUGH PIPE MADE OF ALUMINUM OR ALUMINUM ALLOY. RAPID CHANGES IN PIPE SIZES SHALL BE AVOIDED. SAMPLES FOR TESTING SHALL BE TAKEN AT BOTH THE POINT OF DELIVERY TO THE PUMP AND AT THE DISCHARGE END.

6. TRANSPORT CONCRETE AS RAPIDLY AS PRACTICABLE TAKING PRECAUTION TO PREVENT SEGREGATION OR LOSS OF INGREDIENTS. PUMPING IN ACCORDANCE WITH ACI 304 SHALL BE PERMITTED. DO NOT EXCEED A FREE VERTICAL DROP OF 3 FEET FROM THE POINT OF DISCHARGE.

7. PLACEMENT OF CONCRETE IN COLD WEATHER SHALL BE PERFORMED IN ACCORDANCE WITH ACI 306. DO NOT ALLOW CONCRETE TEMPERATURE TO DECREASE BELOW 50 DEGREES F. OBTAIN APPROVAL PRIOR TO PLACING CONCRETE WHEN THE AMBIENT TEMPERATURE IS BELOW 40 DEGREES F OR WHEN CONCRETE IS LIKELY TO BE SUBJECTED TO FREEZING TEMPERATURES WITHIN 24 HOURS. COVER CONCRETE AND PROVIDE SUFFICIENT HEAT TO MAINTAIN A CONCRETE TEMPERATURE OF 50 DEGREES F MINIMUM THROUGHOUT THE CURING PERIOD.

8. REINFORCEMENT SHALL NOT CONTAIN RUST, SCALE, OIL, GREASE, CLAY, OR FOREIGN SUBSTANCES THAT WOULD REDUCE THE BOND. REMOVE LOOSE RUST PRIOR TO PLACEMENT OF REINFORCEMENT.

9. PROVIDE 1½" OF CONCRETE COVER FOR ALL REINFORCING STEEL UNLESS OTHERWISE INDICATED.

10. WELDED WIRE FABRIC SHALL CONFORM TO ASTM A 185 OR ASTM A 497. WELDED WIRE FABRIC SHALL BE PROVIDED IN SHEETS AND SHALL BE CENTERED IN SLAB UNLESS OTHERWISE NOTED. OVERLAP WELDED WIRE FABRIC SHEETS THE SPACING OF THE CROSS WIRES, PLUS 2 INCHES.

11. THE CONTRACTOR SHALL PROVIDE CONTRACTION JOINTS BY SAW CUTTING OR USE OF A JOINTING TOOL. SAWED JOINTS SHALL BE COMPLETED WITHIN 4 TO 12 HOURS OF CONCRETE PLACEMENT.

12. REINFORCEMENT SUPPORTS SHALL BE CONCRETE OR OTHER NON-CORRODIBLE MATERIAL HAVING A COMPRESSIVE STRENGTH EQUAL TO OR GREATER THAN THE COMPRESSIVE STRENGTH OF THE CONCRETE BEING PLACED.

13. PROVIDE A ¾" CHAMFER ON ALL EXPOSED CONCRETE CORNERS.

14. PERFORM COMPRESSIVE STRENGTH TESTS IN ACCORDANCE WITH ASTM C39. PERFORM ONE SET OF TEST CYLINDERS PER TRUCK. PROVIDE 5 TEST CYLINDERS FOR EACH SET OF TESTS. TAKE PRECAUTIONS TO PREVENT EVAPORATION AND LOSS OF WATER FROM SPECIMENS. TEST TWO CYLINDERS AT 7 DAYS, TWO CYLINDERS AT 28 DAYS AND HOLD ONE IN RESERVE. SUBMIT ALL TEST DATA TO THE GOVERNMENT.

15. PERFORM SLUMP TESTS IN ACCORDANCE WITH ASTM C143. PERFORM TESTS AT COMMENCEMENT OF CONCRETE PLACEMENT, WHEN TEST CYLINDERS ARE MADE, AND FOR EACH BATCH OF CONCRETE. SUBMIT ALL TEST DATA TO THE GOVERNMENT.

16. PERFORM TESTS IN HOT OR COLD WEATHER CONDITIONS (BELOW 50 DEGREES F AND ABOVE 80 DEGREES F) FOR EACH BATCH (MINIMUM) OR EVERY 20 CUBIC YARDS (MAXIMUM) OF CONCRETE, UNTIL THE SPECIFIED TEMPERATURE IS OBTAINED, AND WHENEVER TEST CYLINDERS AND SLUMP TESTS ARE MADE. TEST THE CONCRETE DELIVERED IMMEDIATELY PRIOR TO PLACEMENT AND AFTER PLACEMENT BUT PRIOR TO STRIKING OFF.

17. REFER TO SPECIFICATIONS FOR TROWEL FINISH INFORMATION. REFER TO ARCHITECTURAL DRAWINGS FOR ADDITIONAL INFORMATION REGARDING ADDITIONAL POLISHED CONCRETE FINISH.

18. UNLESS OTHERWISE NOTED, ALL CONCRETE CONSTRUCTION SHALL MEET THE SPECIFIED TOLERANCES OF ACI 117. TOP ELEVATION OF SLABS-ON-GRADE SHALL MATCH THE SPECIFIED FINISH ELEVATION WITHIN A TOLERANCE OF +/- 0.02'.

19. AT ISOLATION JOINTS, PROVIDE PREFORMED EXPANSION JOINT FILLER IN CONFORMANCE WITH ASTM D 1751, ASTM D 1752, OR 100% RECYCLED MATERIAL MEETING ASTM D 1752 (SUBPARAGRAPHS 5.1 TO 5.4). MATERIAL SHALL BE 3/8 INCH THICK, UNLESS OTHERWISE INDICATED.

CONCRETE MASONRY UNIT NOTES

1. CONCRETE MASONRY UNITS SHALL CONFORM TO ASTM C90 AND BE MADE WITH LIGHTWEIGHT AGGREGATE. THE COMPRESSIVE STRENGTH OF MASONRY, f'm, EXPRESSED AS FORCE PER UNIT OF NET CROSS-SECTIONAL AREA, SHALL BE 1500 PSI AT 28 DAYS.

2. REINFORCING STEEL SHALL COMPLY WITH ASTM A 615, GRADE 60. SHOP FABRICATE REINFORCING BARS WHICH ARE SHOWN TO BE BENT OR HOOKED.

3. GROUT SHALL COMPLY WITH ASTM C476, AND SHALL BE PROPORTIONED TO OBTAIN A 28 DAY STRENGTH OF 2500 PSI.

4. MORTAR SHALL COMPLY WITH ASTM C270, TYPE S OR M. AGGREGATE FOR MORTAR SHALL COMPLY WITH ASTM C144. AGGREGATE FAILING TO COMPLY WITH ASTM C144 GRADATION REQUIREMENTS MAY BE USED PROVIDED THE MORTAR CAN BE PREPARED TO COMPLY WITH THE AGGREGATE RATIO, WATER RETENTION, AND COMPRESSIVE STRENGTH REQUIREMENTS OF THE PROPERTY SPECIFICATIONS OF ASTM C270.

5. PROVIDE VERTICAL REINFORCING BARS OF THE GIVEN SIZE AND SPACING SHOWN ON THE DRAWINGS. LAP ALL REINFORCING 48 x BAR DIAMETERS AT ALL SPLICES.

6. PROVIDE ONE VERTICAL BAR EACH SIDE OF ALL OPENINGS, CONTROL JOINTS, AND AT CORNERS AND INTERSECTIONS OF ALL MASONRY WALLS, BOTH BEARING AND NON-BEARING WALLS.

7. PROVIDE REINFORCING STEEL DOWELS OF THE SAME SIZE AND SPACING AS VERTICAL REINFORCING FROM THE SUPPORTING STRUCTURE. DOWELS SHALL HAVE STANDARD ACI HOOKS.

8. PROVIDE HORIZONTAL BOND BEAMS WITH CONTINUOUS REINFORCING AS SHOWN IN THE SECTIONS AND DETAILS. DISCONTINUE ALL HORIZONTAL REINFORCING AT CONTROL JOINTS EXCEPT FOR THE BOND BEAMS AT JOIST BEARING ELEVATIONS.

9. PROVIDE STANDARD 9 GAGE LADDER TYPE HORIZONTAL JOINT REINFORCING IN CMU WALLS AT 16" OC AND IN TWO JOINTS IMMEDIATELY ABOVE AND BELOW ALL OPENINGS, EXTENDING A MINIMUM OF 2'-0" BEYOND THE JAMB ON EACH SIDE OF THE OPENING, EXCEPT AT CONTROL JOINTS.

STEEL DECK NOTES

1. STEEL DECK SHALL CONFORM TO THE LATEST EDITION OF THE AMERICAN IRON AND STEEL INSTITUTE (AISI), "SPECIFICATION FOR THE DESIGN OF COLD-FORMED STEEL STRUCTURAL MEMBERS" AND THE STEEL DECK INSTITUTE (SDI), "DESIGN MANUAL FOR COMPOSITE DECKS, FORM DECKS, AND ROOF DECKS."

2. STEEL DECK SHALL SHALL BE ASTM A53 G60 GALVANIZED 3" x 22 GAGE TYPE N DECK SPANNING PERPENDICULAR TO SUPPORTS. UNLESS OTHERWISE NOTED, ATTACH DECK TO SUPPORTS PER THE TYPICAL DECK ATTACHMENT DETAIL.

3. STEEL DECK SHALL SPAN A MINIMUM OF THREE CONTINUOUS SPANS UNLESS OTHERWISE NOTED OR SHOWN.

4. WELDING SHALL BE IN ACCORDANCE WITH AWS D1.3 "STRUCTURAL WELDING CODE - SHEET STEEL."

5. PERMANENT SUSPENDED LOADS SHALL NOT BE SUPPORTED BY STEEL ROOF DECK.

6. UNDERSIDE OF METAL DECK TO RECEIVE PAINTED FINISH - REFER TO ARCHITECTURAL DRAWINGS AND SPECIFICATIONS.

STRUCTURAL STEEL NOTES

1. STRUCTURAL STEEL SHALL COMPLY WITH THE FOLLOWING SPECIFICATIONS:
   A) STRUCTURAL STEEL SHAPES, PLATES AND BARS (EXCEPT W-SHAPES)- ASTM A36, Fy=36 KSI
   B) STRUCTURAL STEEL W-SHAPES- ASTM A992/A572, Fy=50 KSI
   C) PIPES - ASTM A53, GRADE B, FY=35 KSI
   D) THREADED RODS - ASTM A307, GRADE A

2. UNLESS OTHERWISE NOTED, ALL CONNECTIONS SHALL BE AISC TYPE 2 "STANDARD FRAMED BEAM CONNECTIONS" WITH ASTM A325 BOLTS, DESIGNED FOR THE UNIFORM LOAD CONSTANTS FOR LATERALLY SUPPORTED BEAMS GIVEN IN PART 2 OF THE "MANUAL OF STEEL CONSTRUCTION, ALLOWABLE STRESS DESIGN"

3. EXTERIOR EXPOSED STEEL SHALL BE HOT DIPPED GALVANIZED IN ACCORDANCE WITH ASTM A153. REPAIR DAMAGE TO GALVANIZED COATINGS USING ASTM A780 ZINC RICH PAINT FOR GALVANIZING DAMAGED BY HANDLING, TRANSPORTING, CUTTING, WELDING, OR BOLTING. DO NOT HEAT SURFACES TO WHICH REPAIR PAINT HAS BEEN APPLIED. ZINC RICH COMPOUND SHALL BE 95% METALLIC ZINC, BY WEIGHT IN DRIED FILM CONFORMING TO FED. SPEC. DOD-P-21035A AND MEETING MIL SPEC. MIL-P-26915A. PROVIDE TWO COATS WITH 2 MIL THICKNESS PER COAT FOR A TOTAL OF 4 MILS.

4. WELDING SHALL BE IN ACCORDANCE WITH AWS D1.1 "STRUCTURAL WELDING CODE - STEEL". WELD ELECTRODES SHALL BE E70XX. UNLESS OTHERWISE NOTED, PROVIDE CONTINUOUS FILLET WELDS WITH MINIMUM SIZE REQUIRED BY TABLE J2.4 OF THE "MANUAL OF STEEL CONSTRUCTION, ALLOWABLE STRESS DESIGN".

5. PRIOR TO WELDING, THE CONTRACTOR SHALL SUBMIT CERTIFICATION FOR EACH WELDER STATING THE TYPE OF WELDING AND POSITIONS QUALIFIED FOR, THE CODE AND PROCEDURE QUALIFIED UNDER, DATE QUALIFIED, AND THE FIRM AND INDIVIDUAL CERTIFYING THE QUALIFICATION TESTS.

6. NON-SHRINK GROUT SHALL CONFORM TO ASTM C1107, WITH NO ASTM C827 SHRINKAGE (GROUT SHALL BE NONMETALLIC).

7. PROVIDE A PAINTED FINISH TO ALL STRUCTURAL STEEL THAT IS EXPOSED TO VIEW (EXISTING AND NEW). REFER TO ARCHITECTURAL DRAWINGS AND SPECIFICATIONS FOR ADDITIONAL INFORMATION.

8. STEEL BAR GRATING SHALL BE CAPABLE OF SAFELY SUPPORTING A 100 PSF UNIFORM LIVE LOAD OR A 250 POUNDS PER LINEAR FOOT CONCENTRATED LIVE LOAD (LOCATED AT MID SPAN) FOR A SIMPLE SPAN OF 4'-0". TOTAL DEFLECTION SHALL NOT EXCEED ¼" FOR THE UNIFORM LOAD CASE.

9. PROVIDE STEEL BAR GRATING WITH 3/4" x 3/16" BEARING BARS SPACED AT 1 3/16" OC AND CROSS BARS SPACED AT 4". STEEL BAR GRATING SHALL MEET THE REQUIREMENTS OF NAAMM MBG 531, TYPE W-19-4. BAND ENDS OF GRATINGS WITH BARS OF THE SAME OR GREATER THICKNESS THAN THE METAL USED FOR GRATING. WELD BANDING BARS TO THE BEARING BARS AT LEAST EVERY FOURTH BAR AND IN EVERY CORNER. TACK WELD INTERVENING BARS. ORIENT BEARING BARS IN THE SHORT DIRECTION OF THE WORK PLATFORM. WELD GRATING TO FRAME AT EACH END USING A MINIMUM OF THREE (3) - ¾" LONG, 3/16" FILLET WELDS, EQUALLY SPACED. IF GRATING IS PROVIDED IN MORE THAN ONE PIECE, PROVIDE THREE REQUIRED WELDS AT EACH END FOR EACH SECTION.

10. ATTACH GRATING TO STRUCTURAL MEMBERS AS PER MANUFACTURER'S RECOMMENDED ATTACHMENT SYSTEM. MAXIMUM LENGTH OF BEARING ON BEAMS ADJACENT TO THE EXPANSION TANK SHALL BE 2" TO ACCOMMODATE INSTALLATION OF THE TANK.

ADHESIVE ANCHOR NOTES

1. ADHESIVE ANCHORS SHALL CONSIST OF AN ALL-THREAD ANCHOR ROD, NUT, WASHER, ADHESIVE CAPSULE(S) AND A LEVELING NUT IF REQUIRED. ANCHOR RODS, NUTS AND WASHERS SHALL BE STANDARD STRENGTH UNLESS OTHERWISE NOTED. STANDARD STRENGTH RODS SHALL CONFORM TO ASTM A36; STANDARD STRENGTH NUTS SHALL CONFORM TO ASTM A563, GRADE A; STANDARD STRENGTH WASHERS SHALL CONFORM TO DIMENSIONAL REQUIREMENTS OF ANSI B18.22.1 TYPE A PLAIN. ALL ANCHOR RODS, WASHERS, AND NUTS SHALL BE HOT DIP GALVANIZED AND SHALL CONFORM TO ASTM A153 OR ASTM A123 AS APPROPRIATE. ADHESIVE FOR ALL ANCHORS SHALL BE A VINYL URETHANE RESIN WITH A DIBENZOYL PEROXIDE HARDENER.

2. ALL ANCHORS SHALL BE SET INTO EXISTING CONCRETE USING AN ADHESIVE MATERIAL CAPABLE OF DEVELOPING THE FULL STRENGTH OF THE ANCHOR AT THE EMBEDMENT DEPTH INDICATED. ALL ANCHORS SHALL BE EMBEDDED 4" MINIMUM INTO SOUND CONCRETE UNLESS OTHERWISE NOTED.

SYMBOL LEGEND

EXISTING	NEW	DESCRIPTION
○	○	PIPE
+101.00	+101.00	EDGE OF CONCRETE / ELEVATION
		CONCRETE SLOPE
		TEMPORARY BENCHMARK (TBM)
		DEMOLITION OF EXISTING CONCRETE SLAB
		DEMOLITION OF EXISTING ASPHALT OVERLAY
		LIMITS OF SLABJACKING

STRUCTURAL ABBREVIATIONS

ARCH	ARCHITECT, -URAL
BLDG	BUILDING
BOT	BOTTOM
C	CHANNEL
CJ	CONTROL JOINT
CL	CENTER LINE
CLR	CLEAR
CMU	CONCRETE MASONRY UNIT
CONC	CONCRETE
CONT	CONTINUOUS
DIA (OR) ø	DIAMETER
DWGS	DRAWINGS
EA	EACH
EL	ELEVATION
EXIST	EXISTING
f'c	COMPRESSIVE STRESS
FIN FLR	FINISHED FLOOR
HORIZ	HORIZONTAL
KCJ	KEYED CONSTRUCTION JOINT
L	ANGLE
LLH	LONG LEG HORIZONTAL
LLV	LONG LEG VERTICAL
MAX	MAXIMUM
MIN	MINIMUM
MPH	MILES PER HOUR
#	NUMBER
OC	ON CENTER
OPNG	OPENING
PL	PLATE
PSF	POUNDS PER SQUARE FOOT
PSI	POUNDS PER SQUARE INCH
REINF	REINFORCE, -MENT
REQD	REQUIRED
SIM	SIMILIAR
SOG	SLAB ON GRADE
TOC	TOP OF CONCRETE
TOF	TOP OF FOOTING
TOM	TOP OF MASONRY
TOS	TOP OF STEEL
TYP	TYPICAL
VERT	VERTICAL
VIF	VERIFY IN FIELD
W/	WITH
WWF	WELDED WIRE FABRIC

APPR | DATE | DESCRIPTION | SYM

NAVFAC

SEAL

A/E INFO

APPROVED
FOR RALPH DEAL 3/23/15
FOR COMMANDER NAVFAC

ACTIVITY
SATISFACTORY TO DATE 3-24-15
DES GTF | DRW GTF | CHK JGW
<<PM/DM>> R. M. RUSSELL
BRANCH MANAGER
ENGR DIRECTOR Ralph D. Deal
CUSTOMER

DEPARTMENT OF THE NAVY
NAVAL FACILITIES ENGINEERING COMMAND
PWD PORTSMOUTH

NAVAL FACILITIES ENGINEERING COMMAND - MID ATLANTIC
NORFOLK NAVAL SHIPYARD - PORTSMOUTH, VIRGINIA

NORFOLK NAVAL SHIPYARD
PORTSMOUTH, VIRGINIA

B260 EXTENSIVE REPAIRS

GENERAL STRUCTURAL NOTES, LEGEND AND ABBREVIATIONS

SCALE: AS NOTED
EPROJECT NO.: 1146716
CONSTR. CONTR. NO. N40085-15-R-0018
NAVFAC DRAWING NO. 12681965
SHEET 11 OF 118

S-001

DRAWFORM REVISION: 10 MARCH 2009

FILE NAME: P:\VA\NOS\Buildings\0260\2011_1146716_Nuclear Materials Wise Repairs\B_Design\Drawings\B0O260-1146716-S-001.dwg LAYOUT NAME: S-001 PLOTTED: Tuesday, March 17, 2015 - 6:53pm USER: gorry.ferreri

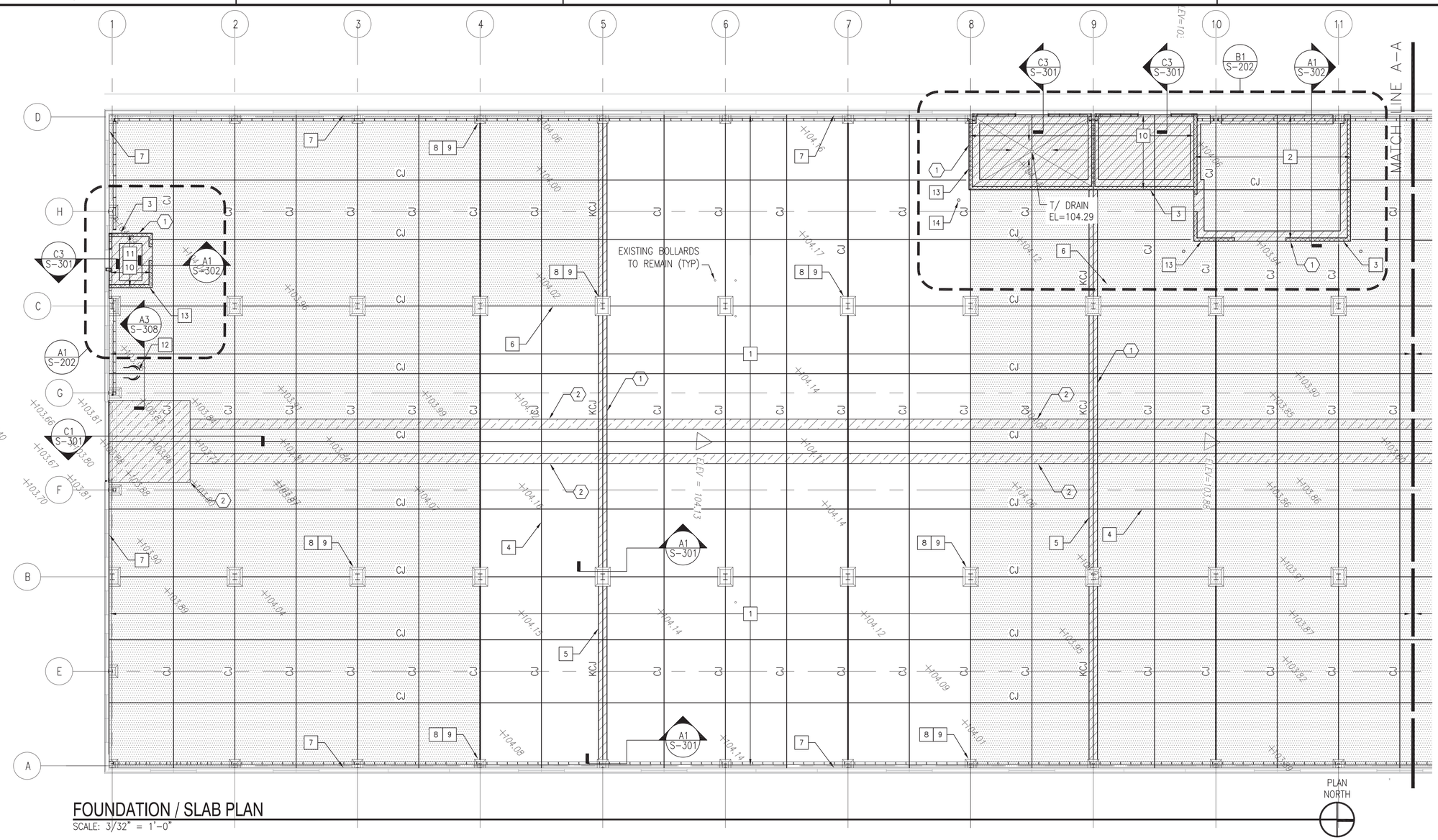

FOUNDATION / SLAB PLAN

SCALE: 3/32" = 1'-0"

DEMOLITION KEYNOTES

1. REMOVE THE EXISTING 6" STEEL REINFORCED CONCRETE SLAB ON GRADE. REMOVE SUBSOIL TO 6" BELOW THE PROPOSED UNDERSIDE OF CONCRETE SLAB OR BOTTOM OF FOOTING ELEVATION, AS INDICATED. SAWCUT EXISTING CONCRETE SLAB TO 1" DEPTH AT THE LIMITS OF DEMOLITION. SEE ARCH DRAWINGS, SECTIONS FOR LAYOUT INFORMATION.
2. DEMOLISH ASPHALTIC OVERLAY, ½" AVERAGE THICKNESS. DEMOLISH EXISTING RAILROAD TRACKS AND APPURTENANCES AS NECESSARY TO INSTALL SPECIFIED NEW WORK.

NEW WORK KEYNOTES

1. PROVIDE CONCRETE TOPPING SLAB PLACED DIRECTLY ON EXISTING CONCRETE SLAB ON GRADE. TOC EL = 104.42'. SEE SECTIONS, CONC NOTES AND SLAB ON GRADE DETAILS. SLAB TO BE REINFORCED WITH 6X6 W2.1 X W2.1 WWF. f'c = 4,000 PSI.
2. PROVIDE CONCRETE TOPPING SLAB ON 10 MIL VAPOR BARRIER ON EXISTING SLAB ON GRADE. TOC EL = 104.42'. SEE SECTIONS, CONC NOTES AND SLAB ON GRADE DETAILS. SLAB TO BE REINFORCED WITH 6X6 W1.4 X W1.4 WWF. f'c = 4,000 PSI. PROVIDE 6" OF SELECT FILL AT ALL AREAS WHERE EXIST SLAB IS REMOVED.
3. PROVIDE 6" MINIMUM THICKNESS OF SELECT FILL, 10 MIL VAPOR BARRIER AND 2'-0" WIDE CONCRETE THICKENED SLAB REINFORCED WITH 2 #5 LONGITUDINAL BARS – SEE SECTION.
4. PROVIDE CONTROL JOINTS IN NEW CONC TOPPING SLAB AND SLABS ON GRADE – SEE DETAIL.

NEW WORK KEYNOTES (CONTINUED)

5. PROVIDE KEYED CONSTRUCTION JOINTS IN NEW SLAB – SEE DETAIL.
6. PROVIDE SLABJACKING TO THE LIMITS SHOWN AS SPECIFIED IN SPECIFICATION SECTION 32 01 29.62. FOR BIDDING PURPOSES, PRESUME 5000 CUBIC FEET OF GROUT PLACEMENT.
7. PROVIDE ISOLATION JOINT WHERE SLAB ABUTS EXIST CONC WALL – SEE DETAIL (TYP).
8. PROVIDE ISOLATION JOINT AT PERIMETER OF EXISTING CONC PIERS – SEE SECTION (TYP).
9. PROVIDE REINFORCED CONC CURB AT EX CONC PIERS – SEE SECTION (TYP).

NEW WORK KEYNOTES (CONTINUED)

10. PROVIDE 10 MIL VAPOR BARRIER, 6" MINIMUM THICKNESS OF SELECT FILL, AND 5" THICK SLAB ON GRADE REINFORCE WITH 6X6 W1.4 X W1.4 WWF. TOP OF SLAB EL=104.42', EXCEPT PITCH SLAB TO DRAIN AT RESTROOMS AS SHOWN ON SHEET S–201 AND S–202. PROVIDE DEPRESSED SLAB AT WALK OFF MATS (SEE ARCHITECTURAL DRAWINGS FOR LOCATION.
11. DEPRESS TOP OF SLAB TO ACCOMMODATE WALK OFF MATS. COORDINATE EXTENT AND DEPTH WITH ARCH DRAWINGS.
12. FIXED LADDER, CAGE, AND PLATFORM – SEE SHEET S–308.
13. 8" CONCRETE MASONRY WALL – GROUTED SOLID WITH #5 VERTICAL REINFORCING AT 24" OC AND HORIZONTAL BOND BEAM AT THE TOP OF THE WALL. TOP OF MASONRY EL = 107.92'. SEE ARCHITECTURAL DRAWINGS FOR GLAZED FINISH INFORMATION.
14. GUARD POST – SEE DETAIL ON C–501. SEE ARCH DRAWINGS FOR LOCATIONS (TYP).

GENERAL SHEET NOTES

1. PROVIDE ISOLATION JOINT AT THE PERIMETER OF ALL EXISTING (TO REMAIN) AND NEW CONDUIT, DOMESTIC WATER PIPING, PLUMBING PIPING, AND OTHER SIMILAR PENETRATIONS AT THE NEW CONCRETE TOPPING SLAB. FOR BIDDING PURPOSES, ASSUME 20 PENETRATIONS AT 4" DIAMETER, 40 PENETRATIONS AT 2" DIAMETER, AND 20 PENETRATIONS AT 1" DIAMETER.
2. UNLESS OTHERWISE NOTED, TOP OF SLAB ELEVATION AT THE BUILDING INTERIOR SHALL BE 104.42'. ELEVATIONS SHOWN ARE EXISTING TOP OF SLAB ELEVATIONS.
3. LAY OUT FOUNDATION WORK BASED UPON DIIMENSIONS SHOWN ON ARCHITECTURAL DRAWINGS.

GRAPHIC SCALE

3/32" = 1'-0" 0 8' 16' 24'

APPR	DATE	DESCRIPTION	SYM

NAVFAC

A/E INFO

APPROVED
FOR RALPH DEAL 3/27/15
FOR COMMANDER NAVFAC
ACTIVITY
SATISFACTORY TO DATE 3-25-15

DES	GTF	DRW	GTF	CHK	JGW

<<PM/TM/CM>> R. M. RUSSELL
BRANCH MANAGER J.A.J
ENGR DIRECTOR Ralph D. Deal
CUSTOMER

DEPARTMENT OF THE NAVY
NAVAL FACILITIES ENGINEERING COMMAND
PWD PORTSMOUTH

NAVAL FACILITIES ENGINEERING COMMAND ~ MID ATLANTIC
NORFOLK NAVAL SHIPYARD – PORTSMOUTH, VIRGINIA

NORFOLK NAVAL SHIPYARD
PORTSMOUTH, VIRGINIA

B260 EXTENSIVE REPAIRS

SLAB AND FOUNDATION PLAN – SOUTH

SCALE:	AS NOTED
EPROJECT NO.:	1146716
CONSTR. CONTR. NO.	N40085-15-R-0018
NAVFAC DRAWING NO.	12681966
SHEET	12 OF 118

S-101

DRAWFORM REVISION: 10 MARCH 2009

FILE NAME: P:\VA\NNSY\Buildings\0260\2011_1146716_Nuclear Materials Wrse Repairs\B_Design\Drawings\BLDG260-1146716-S-101S-102.dwg LAYOUT NAME: S-101 PLOTTED: Tuesday, March 17, 2015 - 6:58am USER: gerry.ferrari

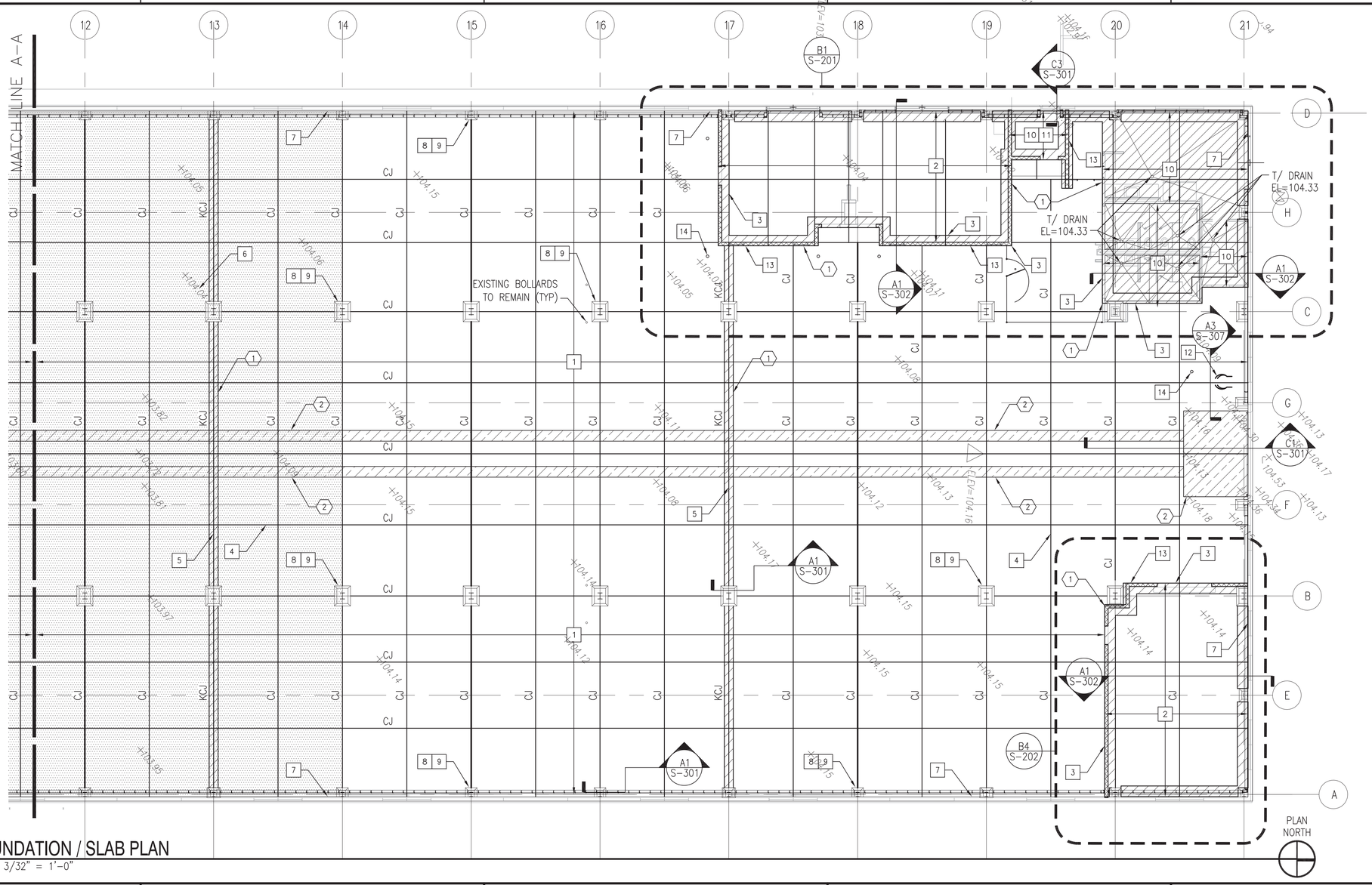

FOUNDATION / SLAB PLAN

SCALE: 3/32" = 1'-0"

DEMOLITION KEYNOTES

1. REMOVE THE EXISTING 6" STEEL REINFORCED CONCRETE SLAB ON GRADE. REMOVE SUBSOIL TO 6" BELOW THE PROPOSED UNDERSIDE OF CONCRETE SLAB OR BOTTOM OF FOOTING ELEVATION, AS INDICATED. SAWCUT EXISTING CONCRETE SLAB TO 1" DEPTH AT THE LIMITS OF DEMOLITION. SEE ARCH DRAWINGS, SECTIONS FOR LAYOUT INFORMATION.
2. DEMOLISH ASPHALTIC OVERLAY, ½" AVERAGE THICKNESS. DEMOLISH EXISTING RAILROAD TRACKS AND APPURTENANCES AS NECESSARY TO INSTALL SPECIFIED NEW WORK.

NEW WORK KEYNOTES

1. PROVIDE CONCRETE TOPPING SLAB PLACED DIRECTLY ON EXISTING CONCRETE SLAB ON GRADE. TOC EL = 104.42'. SEE SECTIONS, CONC NOTES AND SLAB ON GRADE DETAILS. SLAB TO BE REINFORCED WITH 6X6 W2.1 X W2.1 WWF. f'c = 4,000 PSI.
2. PROVIDE CONCRETE TOPPING SLAB ON 10 MIL VAPOR BARRIER ON EXISTING SLAB ON GRADE. TOC EL = 104.42'. SEE SECTIONS, CONC NOTES AND SLAB ON GRADE DETAILS. SLAB TO BE REINFORCED WITH 6X6 W1.4 X W1.4 WWF. f'c = 4,000 PSI. PROVIDE 6" OF SELECT FILL AT ALL AREAS WHERE EXIST SLAB IS REMOVED.
3. PROVIDE 6" MINIMUM THICKNESS OF SELECT FILL, 10 MIL VAPOR BARRIER AND 2'-0" WIDE CONCRETE THICKENED SLAB REINFORCED WITH 2 #5 LONGITUDINAL BARS – SEE SECTION.
4. PROVIDE CONTROL JOINTS IN NEW CONC TOPPING SLAB AND SLABS ON GRADE – SEE DETAIL.

NEW WORK KEYNOTES (CONTINUED)

5. PROVIDE KEYED CONSTRUCTION JOINTS IN NEW SLAB – SEE DETAIL.
6. PROVIDE SLABJACKING TO THE LIMITS SHOWN AS SPECIFIED IN SPECIFICATION SECTION 32 01 29.62. FOR BIDDING PURPOSES, PRESUME 5000 CUBIC FEET OF GROUT PLACEMENT.
7. PROVIDE ISOLATION JOINT WHERE SLAB ABUTS EXIST CONC WALL – SEE DETAIL (TYP).
8. PROVIDE ISOLATION JOINT AT PERIMETER OF EXISTING CONC PIERS – SEE SECTION (TYP).
9. PROVIDE REINFORCED CONC CURB AT EX CONC PIERS – SEE SECTION (TYP).

NEW WORK KEYNOTES (CONTINUED)

10. PROVIDE 10 MIL VAPOR BARRIER, 6" MINIMUM THICKNESS OF SELECT FILL, AND 5" THICK SLAB ON GRADE REINFORCE WITH 6X6 W1.4 X W1.4 WWF. TOP OF SLAB EL=104.42', EXCEPT PITCH SLAB TO DRAIN AT RESTROOMS AS SHOWN ON SHEET S-201 AND S-202. PROVIDE DEPRESSED SLAB AT WALK OFF MATS (SEE ARCHITECTURAL DRAWINGS FOR LOCATION.
11. DEPRESS TOP OF SLAB TO ACCOMMODATE WALK OFF MATS. COORDINATE EXTENT AND DEPTH WITH ARCH DRAWINGS.
12. FIXED LADDER, CAGE, AND PLATFORM – SEE SHEET S-308.
13. 8" CONCRETE MASONRY WALL – GROUTED SOLID WITH #5 VERTICAL REINFORCING AT 24" OC AND HORIZONTAL BOND BEAM AT THE TOP OF THE WALL. TOP OF MASONRY EL = 107.92'. SEE ARCHITECTURAL DRAWINGS FOR GLAZED FINISH INFORMATION.
14. GUARD POST – SEE DETAIL ON C-501. SEE ARCH DRAWINGS FOR LOCATIONS (TYP).

GENERAL SHEET NOTES

1. PROVIDE ISOLATION JOINT AT THE PERIMETER OF ALL EXISTING (TO REMAIN) AND NEW CONDUIT, DOMESTIC WATER PIPING, PLUMBING PIPING, AND OTHER SIMILAR PENETRATIONS AT THE NEW CONCRETE TOPPING SLAB. FOR BIDDING PURPOSES, ASSUME 20 PENETRATIONS AT 4" DIAMETER, 40 PENETRATIONS AT 2" DIAMETER, AND 20 PENETRATIONS AT 1" DIAMETER.
2. UNLESS OTHERWISE NOTED, TOP OF SLAB ELEVATION AT THE BUILDING INTERIOR SHALL BE 104.42'. ELEVATIONS SHOWN ARE EXISTING TOP OF SLAB ELEVATIONS.
3. LAY OUT FOUNDATION WORK BASED UPON DIIMENSIONS SHOWN ON ARCHITECTURAL DRAWINGS.

GRAPHIC SCALE

3/32" = 1'-0" 0 8' 16' 24'

APPR | DATE | DESCRIPTION | SYM

SEAL

A/E INFO

APPROVED
FOR RALPH DEAL 2/23/15
FOR COMMANDER NAVFAC

ACTIVITY

SATISFACTORY TO DATE 3-24-15

DES	GTF	DRW	GTF	CHK	JGW

<<PM/DM>> R. M. RUSSELL
BRANCH MANAGER JAJ
ENGR DIRECTOR Ralph D. Deal
CUSTOMER

DEPARTMENT OF THE NAVY
NAVAL FACILITIES ENGINEERING COMMAND – MID ATLANTIC
PWD PORTSMOUTH
NAVAL FACILITIES ENGINEERING COMMAND – MID ATLANTIC
NORFOLK NAVAL SHIPYARD – PORTSMOUTH, VIRGINIA
NORFOLK NAVAL SHIPYARD
PORTSMOUTH, VIRGINIA

B260 EXTENSIVE REPAIRS

SLAB AND FOUNDATION PLAN – NORTH

SCALE: AS NOTED
EPROJECT NO.: 1146716
CONSTR. CONTR. NO.: N40085-15-R-0018
NAVFAC DRAWING NO.: 12681967
SHEET 13 OF 118

S-102

DRAWFORM REVISION: 10 MARCH 2009

FILE NAME: P:\VA\NNSY\Buildings\0260\2011_1146716_Nuclear Materials Wise Reports\B_Design\Drawings\BLDG260-1146716-S-101;S-102.dwg LAYOUT NAME: S-102 PLOTTED: Tuesday, March 17, 2015 – 6:59pm USER: garry.ferrari

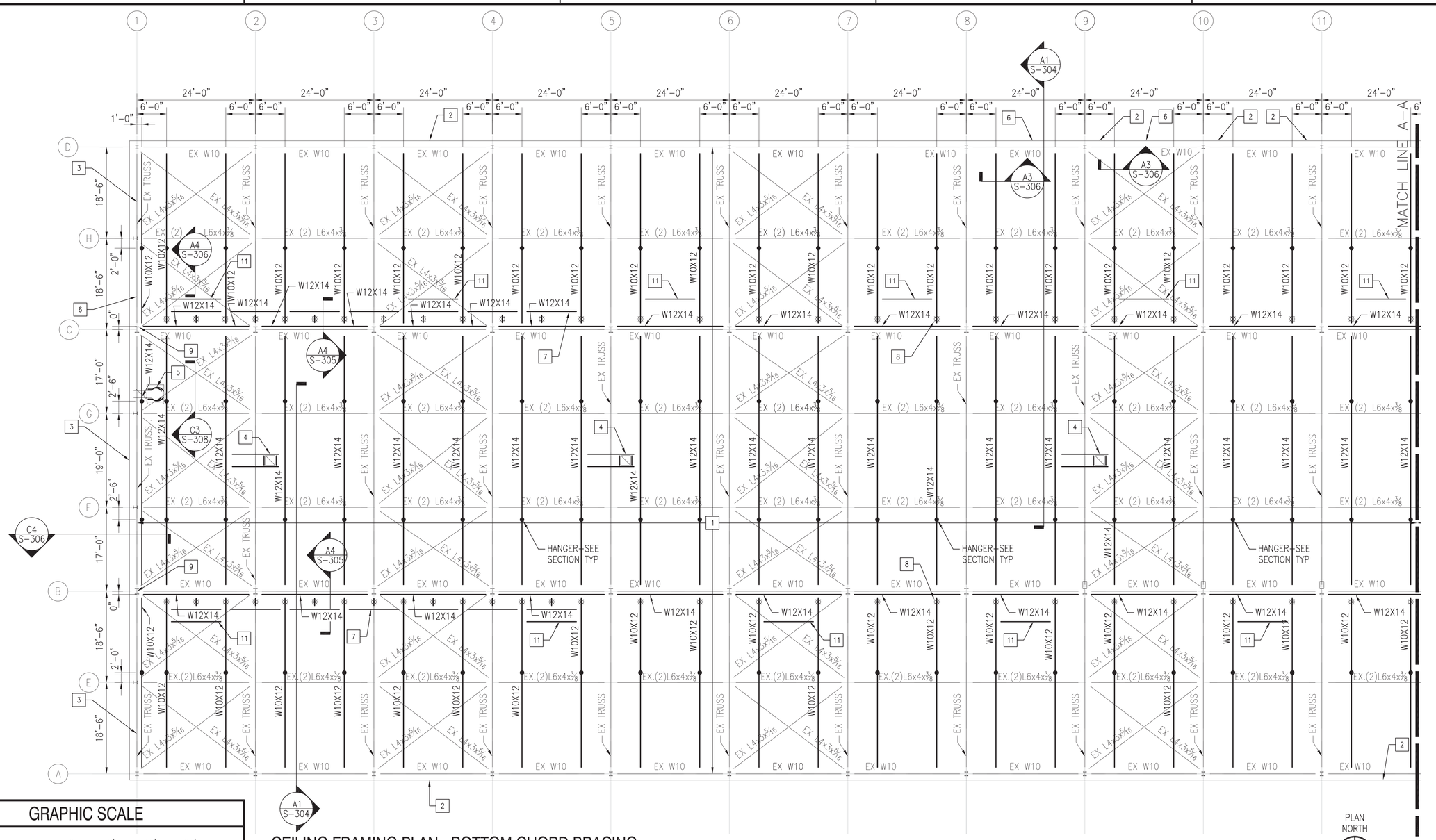

GRAPHIC SCALE

3/32" = 1'–0" (0, 8', 16', 24')

CEILING FRAMING PLAN - BOTTOM CHORD BRACING

SCALE: 3/32" = 1'–0"

NEW WORK KEYNOTES

1. PROVIDE 3", 22 GAGE, TYPE 'N' G60 GALVANIZED METAL DECK.
2. STEEL FRAMING AT LOUVER OPENING. SEE A1/S–307.
3. STEEL FRAMING AT LOUVER OPENING. SEE A2/S–307. SEE DWG M–201 FOR LOUVER LOCATIONS.
4. STEEL FRAMING FOR FAN SUPPORT – SEE EXHAUST FAN SUPPORT DETAIL ON S–306.
5. FIXED LADDER, CAGE, PLATFORM, AND STEEL FRAMING FOR ACCESS HATCH – SEE SHEET S–308.

NEW WORK KEYNOTES (CONT.)

6. MODIFY EXISTING STEEL GIRT FRAMING FOR NEW DOOR – SEE SECTION.
7. L6X4X⅜ LLV TO SUPPORT STEEL ANGLE FRAMING FOR MECHANICAL PIPE. SEE A4/S–305 (TYP).
8. PROVIDE STEEL ANGLE FRAMING FOR MECHANICAL PIPE AT EACH SUPPORT LOCATION INDICATED BY SYMBOL ⊠ (TYP). SEE A4/S–305 (TYP).
9. PROVIDE STRUCTURAL STEEL SUPPORT FOR MECHANICAL PIPE ATTACHED TO EXISTING COLUMN FLANGE. SEE SECTION B2/S–303 (6 TOTAL REQUIRED).

NEW WORK KEYNOTES (CONT.)

10. PROVIDE STRUCTURAL STEEL SUPPORT FOR MECHANICAL PIPE ATTACHED TO EXISTING WIDE FLANGE BEAM. SEE SECTION C2/S–303 (1 TOTAL REQUIRED).
11. L6X4X⅜ LLV TO SUPPORT UNIT HEATER (TYP). SEE A4/S–305.

GENERAL SHEET NOTES

1. TOP OF STEEL EL = 143.17 FOR HIGH BAY STEEL BETWEEN COL LINES B AND C. FIELD VERIFY EXIST STEEL ELEVATIONS AND VERIFY ERECTION CLEARANCES PRIOR TO STEEL FABRICATION.
2. TOP OF STEEL EL = 122.67 AT REMAINING STEEL FRAMING NOT COVERED BY NOTE 1 ABOVE. FIELD VERIFY EXIST STEEL ELEVATIONS AND VERIFY ERECTION CLEARANCES PRIOR TO STEEL FABRICATION.
3. DIMENSIONS SHOWN OF THE EXISTING STRUCTURE ARE TAKEN FROM RECORD DRAWINGS. PROVIDE FIELD VERIFICATION OF DIMENSIONS NECESSARY FOR PROPER FIT UP OF STRUCTURAL STEEL FABRICATIONS.

GENERAL SHEET NOTES (CONT.)

4. AS PART OF THE STEEL FABRICATION SHOP DRAWINGS, PROVIDE A FIELD TOPOGRAPHIC SURVEY OF THE UNDERSIDE OF THE EXISTING TRUSS FRAMING AT THE EXISTING STEEL. SURVEY ELEVATIONS SHALL BE ACCURATE TO ±0.01'. TAKE TOPOGRAPHIC DATA AT NOT LESS THAN 50 LOCATIONS AT THE BUILDING INTERIOR, AT LEAST 20 OF WHICH SHALL BE TAKEN IN BETWEEN COLUMN LINES B AND C. ELEVATIONS SHALL BE RECORDED THROUGHOUT THE BUILDING. ELEVATIONS SHALL BE REFERENCED TO THE DATUM USED TO PREPARE THE CONTRACT DOCUMENTS. THE FINAL TOP OF STEEL ELEVATIONS SHALL THEN BE SELECTED BY THE CONTRACTOR AND SUBMITTED FOR REVIEW AS PART OF THE STRUCTURAL STEEL SHOP DRAWINGS.
5. INDICATES STEEL HANGER – SEE SECTION FOR SIZES AND LOCATIONS.

APPR | DATE | DESCRIPTION | SYM

NAVFAC

SEAL

A/E INFO

APPROVED
for RALPH DEAL 2/23/15
FOR COMMANDER NAVFAC

ACTIVITY
SATISFACTORY TO DATE 2-23-15
DES GTF DRW GTF CHK JGW
<<PM/DM>> R. M. RUSSELL
BRANCH MANAGER J.A.J
ENGR DIRECTOR Ralph D. Deal
CUSTOMER

DEPARTMENT OF THE NAVY
NAVAL FACILITIES ENGINEERING COMMAND ~ MID ATLANTIC
PWD PORTSMOUTH
NAVAL FACILITIES ENGINEERING COMMAND
NORFOLK NAVAL SHIPYARD – PORTSMOUTH, VIRGINIA
NORFOLK NAVAL SHIPYARD
PORTSMOUTH, VIRGINIA

B260 EXTENSIVE REPAIRS

CEILING FRAMING PLAN – SOUTH – BOT CHORD TRUSS BRACING

SCALE: AS NOTED
EPROJECT NO.: 1146716
CONSTR. CONTR. NO. N40085–15–R–0018
NAVFAC DRAWING NO. 12681968
SHEET 14 OF 118

S-103

DRAWFORM REVISION: 10 MARCH 2009

FILE NAME: P:\VA\NNSY\Buildings\0260\2011_1146716_Nuclear Materials Whse Repairs\B_Design\Drawings\BLDG260-1146716-S-103.S-104.dwg LAYOUT NAME: S-103 PLOTTED: Tuesday, March 17, 2015 - 1:56pm USER: gcerry.ferrari

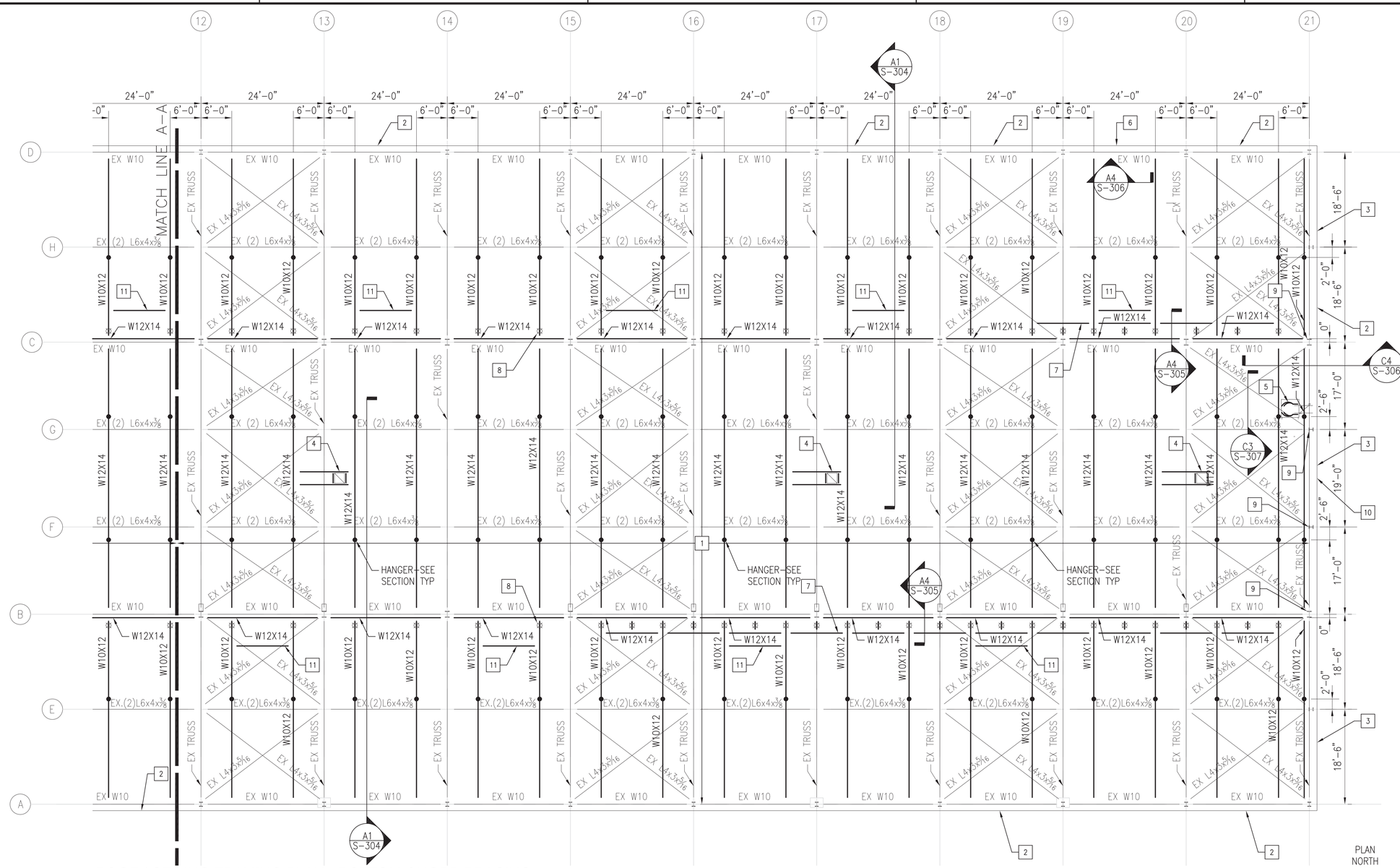

ROOF / CEILING FRAMING PLAN - BOTTOM CHORD BRACING

SCALE: 3/32" = 1'–0"

NEW WORK KEYNOTES

1. PROVIDE 3", 22 GAGE, TYPE 'N' G60 GALVANIZED METAL DECK.
2. STEEL FRAMING AT LOUVER OPENING. SEE A1/S–307.
3. STEEL FRAMING AT LOUVER OPENING. SEE A2/S–307. SEE DWG M–201 FOR LOUVER LOCATIONS.
4. STEEL FRAMING FOR FAN SUPPORT – SEE EXHAUST FAN SUPPORT DETAIL ON S–306.
5. FIXED LADDER, CAGE, PLATFORM, AND STEEL FRAMING FOR ACCESS HATCH – SEE SHEET S–308.

NEW WORK KEYNOTES (CONT.)

6. MODIFY EXISTING STEEL GIRT FRAMING FOR NEW DOOR – SEE SECTION.
7. L6X4X$\frac{3}{8}$ LLV TO SUPPORT STEEL ANGLE FRAMING FOR MECHANICAL PIPE. SEE A4/S–305 (TYP).
8. PROVIDE STEEL ANGLE FRAMING FOR MECHANICAL PIPE AT EACH SUPPORT LOCATION INDICATED BY SYMBOL ⊠ (TYP). SEE A4/S–305 (TYP).
9. PROVIDE STRUCTURAL STEEL SUPPORT FOR MECHANICAL PIPE ATTACHED TO EXISTING COLUMN FLANGE. SEE SECTION B2/S–303 (6 TOTAL REQUIRED).

NEW WORK KEYNOTES (CONT.)

10. PROVIDE STRUCTURAL STEEL SUPPORT FOR MECHANICAL PIPE ATTACHED TO EXISTING WIDE FLANGE BEAM. SEE SECTION C2/S–303 (1 TOTAL REQUIRED).
11. L6X4X$\frac{3}{8}$ LLV TO SUPPORT UNIT HEATER (TYP). SEE A4/S–305.

GENERAL SHEET NOTES

1. SEE SHEET S–103 FOR GENERAL SHEET NOTES.

GRAPHIC SCALE

3/32" = 1'–0" 0 8' 16' 24'

APPR | DATE | DESCRIPTION | SYM

NAVFAC

SEAL

A/E INFO

APPROVED
FOR RALPH DEAL 3/23/15
FOR COMMANDER NAVFAC

ACTIVITY

SATISFACTORY TO DATE 3-23-15

DES GTF DRW GTF CHK JGW

<<PM/DM>> R. M. RUSSELL

BRANCH MANAGER J.A.J

ENGR DIRECTOR Ralph D. Deal

CUSTOMER

DEPARTMENT OF THE NAVY
NAVAL FACILITIES ENGINEERING COMMAND
PWD PORTSMOUTH

NAVAL FACILITIES ENGINEERING COMMAND – MID ATLANTIC
NORFOLK NAVAL SHIPYARD – PORTSMOUTH, VIRGINIA

NORFOLK NAVAL SHIPYARD
PORTSMOUTH, VIRGINIA

B260 EXTENSIVE REPAIRS

CEILING FRAMING PLAN – NORTH – BOT CHORD TRUSS BRACING

SCALE: AS NOTED
EPROJECT NO.: 1146716
CONSTR. CONTR. NO. N40085–15–R–0018
NAVFAC DRAWING NO. 12681969
SHEET 15 OF 118

S-104

DRAWFORM REVISION: 10 MARCH 2009

FILE NAME: P:\VA\VNSY\Buildings\0260\2011_1146716_Nuclear Materials Whse Repairs\B_Design\Drawings\BLDG260–1146716–S–103,S–104.dwg LAYOUT NAME: S–104 PLOTTED: Tuesday, March 17, 2015 – 1:56pm USER: gorry.ferrari

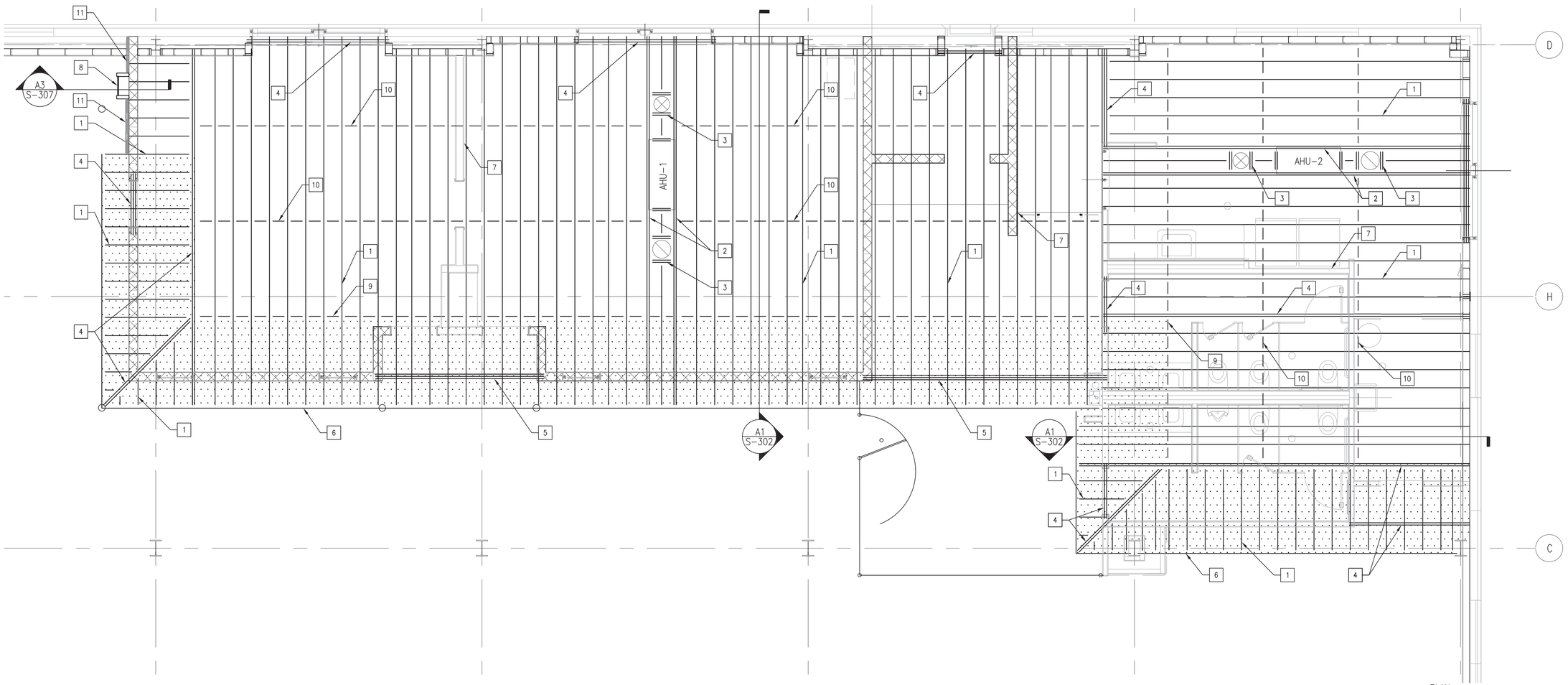

INTERIOR ROOF FRAMING PLAN AT LOBBY, OFFICE, LOCKER ROOM, BREAK AREA AND REST ROOMS

SCALE: 1/4" = 1'-0"

NEW WORK KEYNOTES

1. UNLESS NOTED, TYPICAL JOISTS ARE 1200J200-68 AT 16" ON CENTER SPACING.
2. PROVIDE DOUBLE 1200J200-68 HEADERS AND TRIMMERS AT MECHANICAL EQUIPMENT (PRESUMED OPERATING WEIGHT OF 400 LBS).
3. PROVIDE FRAMED OPENINGS AT SUPPLY AND RETURN PENETRATIONS THROUGH ROOF FRAMING.
4. PROVIDE DOUBLE 1200J200-68 HEADERS AT DOOR AND WINDOW OPENINGS AND AS SHOWN.
5. PROVIDE (3) 1200J200-97 GIRDER. TOP OF STEEL ELEVATION = 114.42'.
6. ¾" CEMENTITIOUS ROOF DECK – SEE SPECIFICATIONS.
7. PROVIDE PARTITION SUPPORTS AND BRACES AS REQUIRED.

NEW WORK KEYNOTES (CONT.)

8. PROVIDE STEEL FIXED LADDER – SEE SECTION A3/S-307.
9. PROVIDE SOLID BLOCKING TO SUPPORT WALL ABOVE – SEE SECTION.
10. PROVIDE JOIST BRIDGING AS REQUIRED.
11. PROVIDE REMOVABLE STEEL GUARD RAIL – SEE C1/S-307.

GENERAL SHEET NOTES

1. THIS PLAN DEPICTS A SUITABLE HORIZONTAL FRAMING ARRANGEMENT FOR THE INTERIOR ROOF FRAMING. LIGHT GAGE FRAMING DESIGN IS THE RESPONSIBILITY OF THE CONTRACTOR PER DIVISION 5 SPECIFICATIONS AND DRAWING NOTES.
2. · · · · · DEPICTS AREAS THAT REQUIRE ADDITIONAL FRAMING (NOT SHOWN) TO FRAME THE PITCHED MANSARD ROOF. REFER TO SECTIONS FOR GENERAL ARRANGEMENT OF ROOF FRAMING MEMBERS.
3. FRAMING SIZES SHOWN ARE MINIMUM ACCEPTABLE SIZES.
4. ROOF FRAMING SHALL BE DESIGNED FOR LIVE LOAD OF 20 PSF UNIFORM LOAD CONCURRENT WITH A 300 POUND POINT LOAD AT MID-SPAN, PLUS ALL APPLICABLE DEAD LOADS AND EQUIPMENT LOADS. CEILING FINISHES ARE SUPPORTED BY THE ROOF FRAMING. LIVE LOAD DEFLECTION SHALL BE LIMITED TO 1/360 OF SPAN LENGTH.
5. INTERIOR PARTITIONS SHALL BE DESIGNED TO SUPPORT A MINIMUM UNIFORM LATERAL LOAD OF 5 PSF MINIMUM.

GENERAL SHEET NOTES (CONT.)

6. TOP OF JOIST ELEVATION = 115.42'.

GRAPHIC SCALE

1/4"=1'-0" 0' 2' 4' 8'

APPR	DATE	DESCRIPTION	STM

NAVFAC

SCAL

A/E INFO

APPROVED
FOR COMMANDER NAVFAC
for RALPH DEAL 3/23/15

ACTIVITY
SATISFACTORY TO DATE 3-23-15

DES	GTF	DRW	GTF	CHK	JGW

<<PM/DM>> R. M. RUSSELL
BRANCH MANAGER J.A.J
ENGR DIRECTOR Ralph D. Deal
CUSTOMER

DEPARTMENT OF THE NAVY
NAVAL FACILITIES ENGINEERING COMMAND
PWD PORTSMOUTH
NAVAL FACILITIES ENGINEERING COMMAND – MID ATLANTIC
NORFOLK NAVAL SHIPYARD – PORTSMOUTH, VIRGINIA
NORFOLK NAVAL SHIPYARD
PORTSMOUTH, VIRGINIA

B260 EXTENSIVE REPAIRS

INTERIOR ROOF FRAMING PLAN

SCALE: AS NOTED
EPROJECT NO.: 1146716
CONSTR. CONTR. NO.: N40085-15-R-0018
NAVFAC DRAWING NO.: 12681970
SHEET 16 OF 118

S-201

DRAWFORM REVISION: 10 MARCH 2009

FILE NAME: P:\VA\NNSY\Buildings\0260\2011_1146716_Nuclear Materials Wtse Repairs\B_Design\Drawings\BUD2260-1146716-S-201\S-202.dwg LAYOUT NAME: S-201 PLOTTED: Tuesday, March 17, 2015 - 7:04am USER: gerry.ferrari

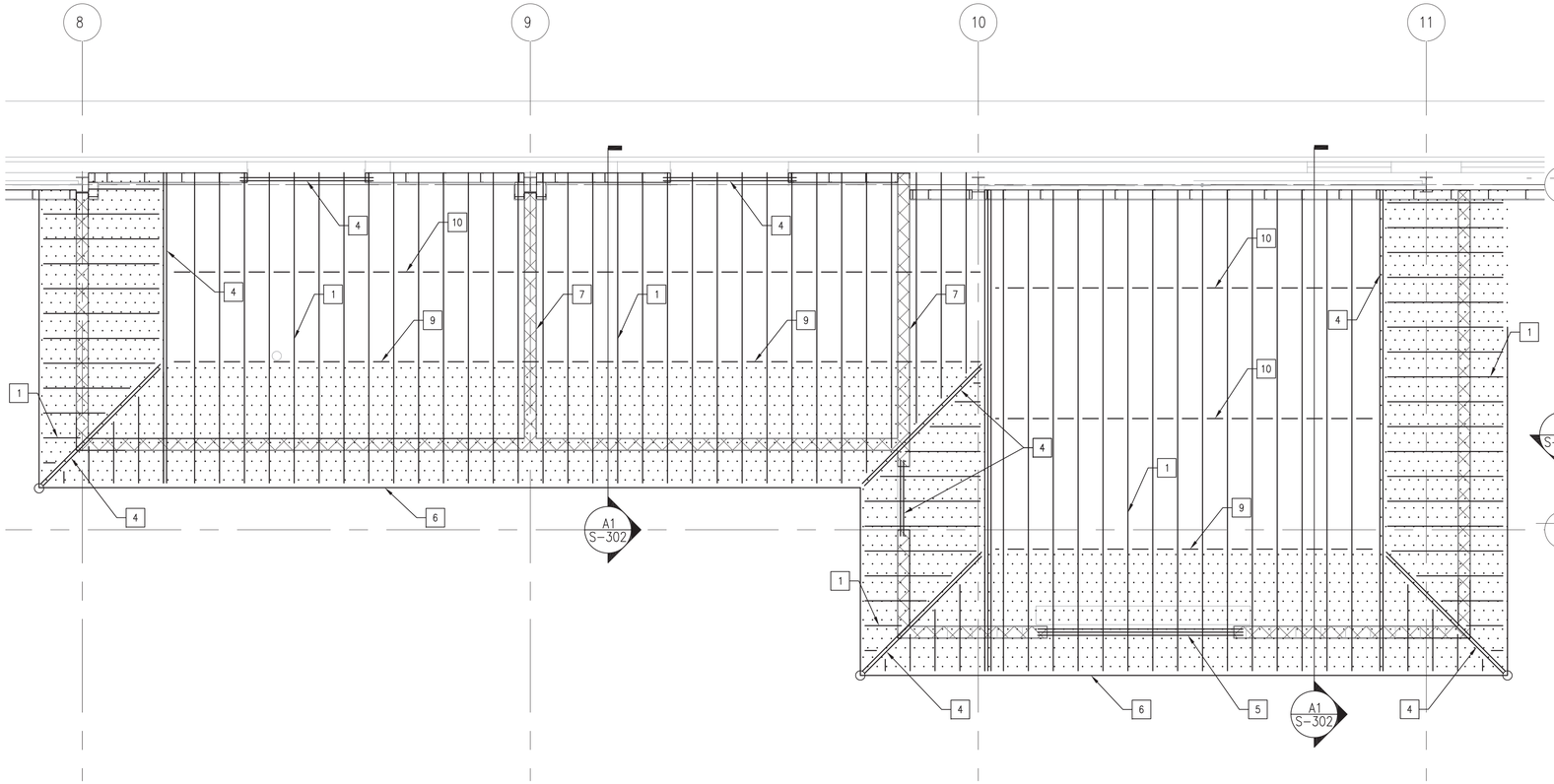

ROOF FRAMING PLAN AT PUMP ROOM AND WELDING AREA
SCALE: 1/4" = 1'-0"
PLAN NORTH
S-101 B1

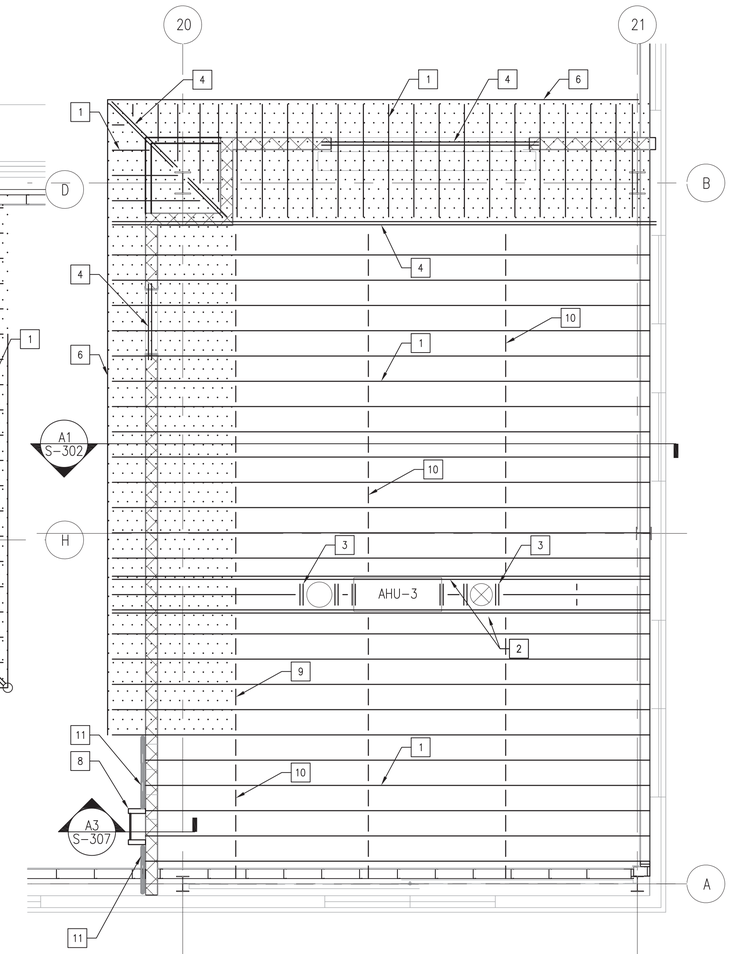

ROOF FRAMING PLAN AT CLEAN AREA
SCALE: 1/4" = 1'-0"
PLAN NORTH
S-102 B4

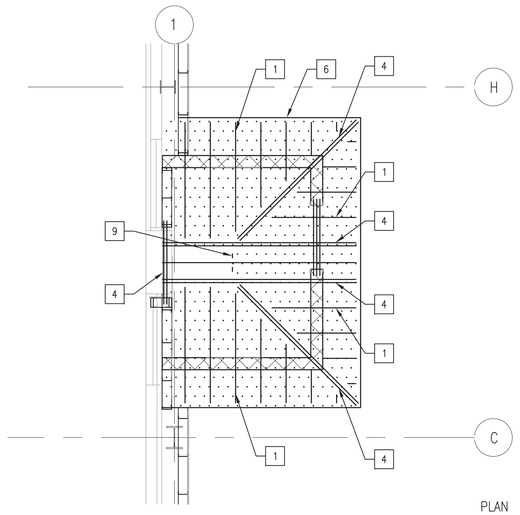

ROOF FRAMING PLAN AT LOBBY 2
SCALE: 1/4" = 1'-0"
PLAN NORTH
S-101 A1

NEW WORK KEYNOTES

1. SEE S-201 FOR NEW WORK KEYNOTES.

GENERAL SHEET NOTES

1. SEE S-201 FOR GENERAL SHEET NOTES.

GRAPHIC SCALE

1/4"=1'-0" 0' 2' 4' 8'

SYM	DESCRIPTION	DATE	APPR

NAVFAC

SEAL

A/E INFO

APPROVED
FOR RALPH DEAL 3/23/15
FOR COMMANDER NAVFAC

ACTIVITY
SATISFACTORY TO DATE 3-23-15

DES	GTF	DRW	GTF	CHK	JGW

<<PM/DM>> R. M. RUSSELL
BRANCH MANAGER JAJ
ENGR DIRECTOR Ralph D. Deal
CUSTOMER

DEPARTMENT OF THE NAVY
NAVAL FACILITIES ENGINEERING COMMAND
NAVAL FACILITIES ENGINEERING COMMAND ~ MID ATLANTIC
PWD PORTSMOUTH NORFOLK NAVAL SHIPYARD – PORTSMOUTH, VIRGINIA
NORFOLK NAVAL SHIPYARD PORTSMOUTH, VIRGINIA

B260 EXTENSIVE REPAIRS

INTERIOR ROOF FRAMING PLANS

SCALE: AS NOTED
EPROJECT NO.: 1146716
CONSTR. CONTR. NO. N40085-15-R-0018
NAVFAC DRAWING NO. 12681971
SHEET 17 OF 118

S-202

DRAWFORM REVISION: 10 MARCH 2009

FILE NAME: P:\VA\NNSY\Buildings\0260\2011_1146716_Nuclear Materials Whse Repairs\B_Design\Drawings\BLDG260-1146716-S-201;S-202.dwg LAYOUT NAME: S-202 PLOTTED: Thursday, March 19, 2015 - 1:09pm USER: garry.ferrari

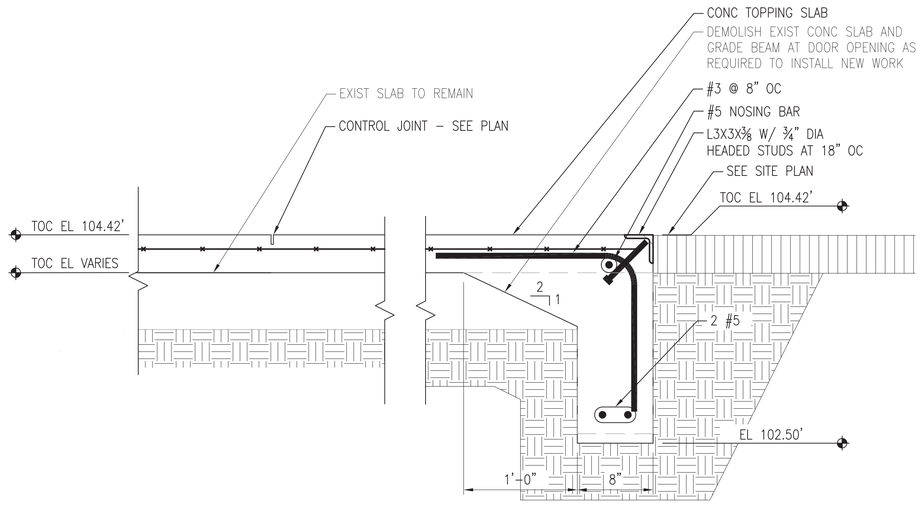

SECTION
SCALE: 1 1/2" = 1'–0"

S–101, S–102 (C1)

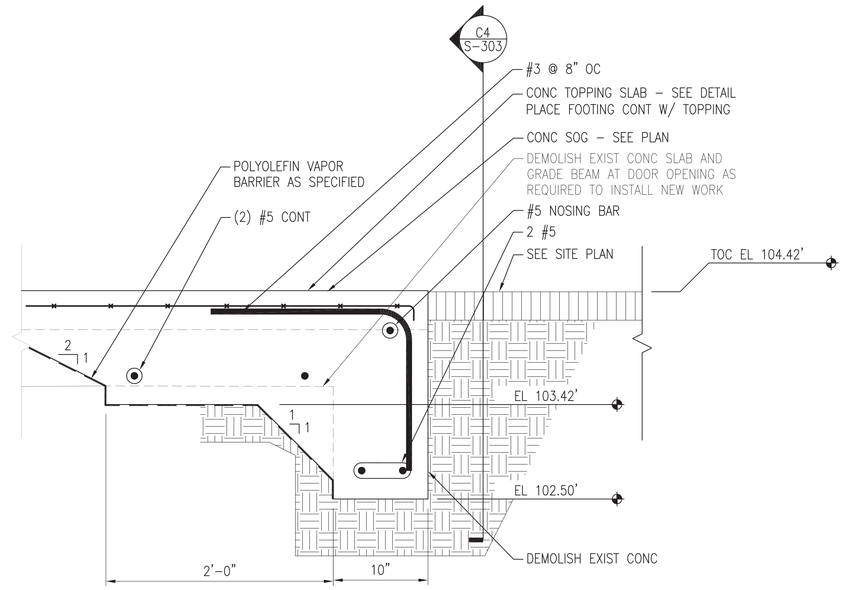

SECTION
SCALE: 1 1/2" = 1'–0"

S–101, S–102, S–201, S–202 (C3)

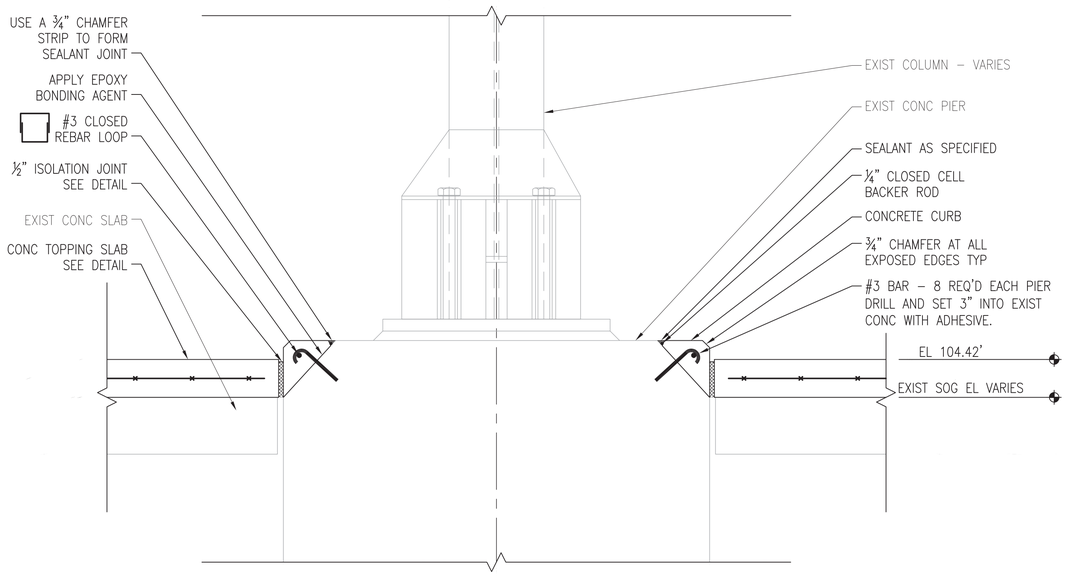

SECTION
SCALE: 1 1/2" = 1'–0"

S–101, S–102 (A1)

GRAPHIC SCALE
1–1/2"=1'–0" 0 6" 1' 1'–6"

APPR | DATE | DESCRIPTION | SYM

NAVFAC

SEAL

A/E INFO

APPROVED
FOR RALPH DEAL 3/23/15
FOR COMMANDER NAVFAC

ACTIVITY
SATISFACTORY TO DATE 3-24-15

DES GTF | DRW GTF | CHK JGW
<<PM/DM>> R. M. RUSSELL
BRANCH MANAGER J.A.J
ENGR DIRECTOR Ralph D. Deal
CUSTOMER

DEPARTMENT OF THE NAVY
NAVAL FACILITIES ENGINEERING COMMAND
PWD PORTSMOUTH

NAVAL FACILITIES ENGINEERING COMMAND – MID ATLANTIC
NORFOLK NAVAL SHIPYARD – PORTSMOUTH, VIRGINIA

NORFOLK NAVAL SHIPYARD
PORTSMOUTH, VIRGINIA

B260 EXTENSIVE REPAIRS

FOUNDATION SECTIONS

SCALE: AS NOTED
EPROJECT NO.: 1146716
CONSTR. CONTR. NO.: N40085–15–R–0018
NAVFAC DRAWING NO.: 12681972
SHEET 18 OF 118

S-301

DRAWFORM REVISION: 10 MARCH 2009

FILE NAME: P:\VA\VNSY\Buildings\0260\2011_1146716_Nuclear Materials Wtse Repairs\B_Design\Drawings\BLDG260–1146716–S–301 to S–308.dwg LAYOUT NAME: S–301 PLOTTED: Tuesday, March 17, 2015 – 7:07am USER: garry.ferrari

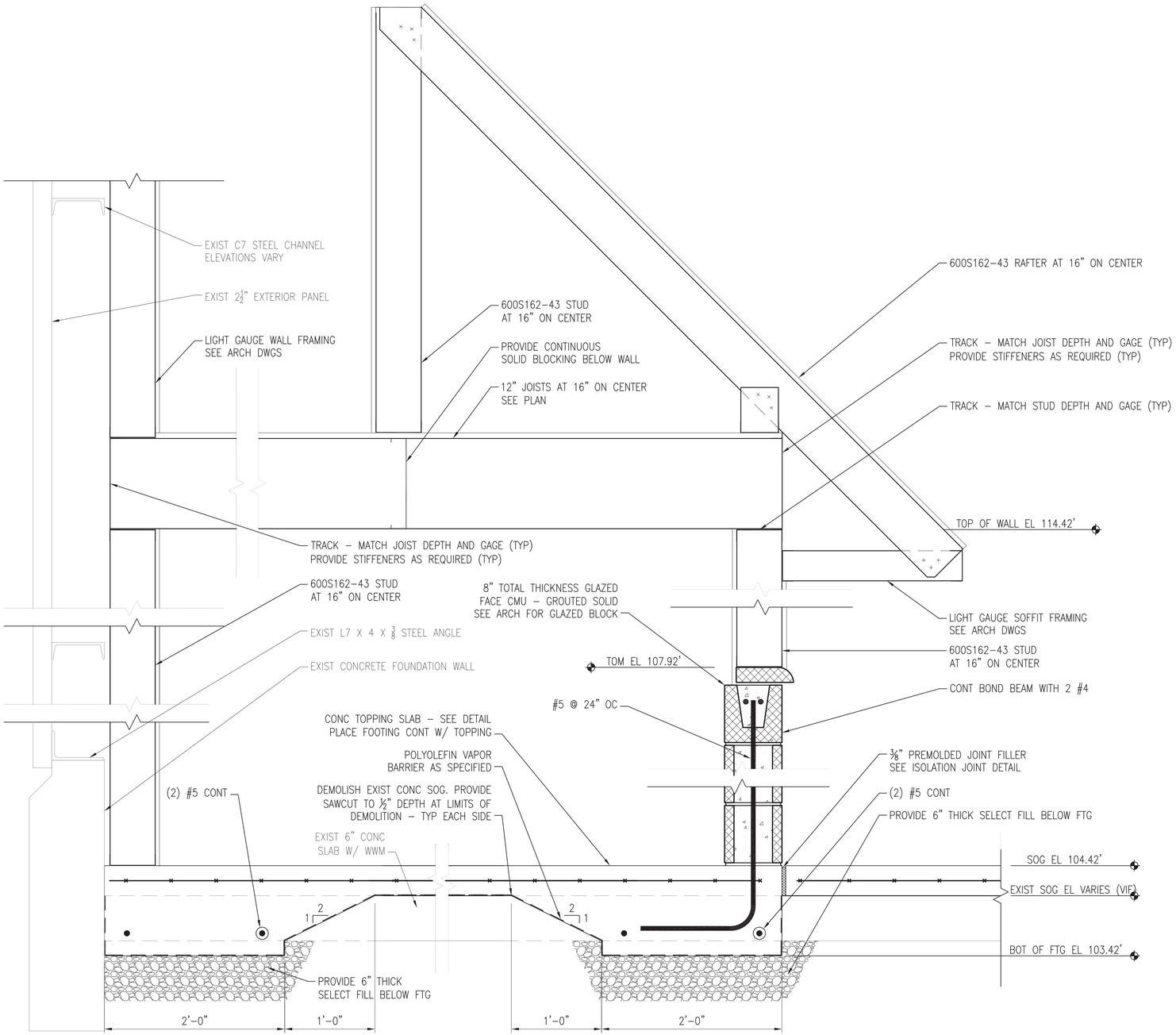

SECTION

SCALE: 1 1/2" = 1'-0"

S-101, S-102, S-401, S-402 (A1)

GRAPHIC SCALE

1-1/2"=1'-0" 0 6" 1' 1'-6"

SYM	DESCRIPTION	DATE	APPR

NAVFAC

SEAL

A/E INFO

APPROVED
FOR RALPH DEAL 2/23/15
FOR COMMANDER NAVFAC

ACTIVITY
SATISFACTORY TO DATE 3-24-15

DES	GTF	DRW	GTF	CHK	JGW

<<PM/DM>> R. M. RUSSELL
BRANCH MANAGER J.A.J
ENGR DIRECTOR Ralph D. Deal
CUSTOMER

DEPARTMENT OF THE NAVY
NAVAL FACILITIES ENGINEERING COMMAND
PWD PORTSMOUTH

NAVAL FACILITIES ENGINEERING COMMAND - MID ATLANTIC
NORFOLK NAVAL SHIPYARD - PORTSMOUTH, VIRGINIA

NORFOLK NAVAL SHIPYARD
PORTSMOUTH, VIRGINIA

B260 EXTENSIVE REPAIRS

FOUNDATION DETAILS

SCALE: AS NOTED
EPROJECT NO.: 1146716
CONSTR. CONTR. NO. N40085-15-R-0018
NAVFAC DRAWING NO. 12681973
SHEET 19 OF 118

S-302

DRAWFORM REVISION: 10 MARCH 2009

FILE NAME: P:\VA\VNSY\Buildings\0260\2011_1146716_Nuclear Materials Whse Repairs\B_Design\Drawings\BLDG260-1146716-S-301 to S-308.dwg LAYOUT NAME: S-302 PLOTTED: Tuesday, March 17, 2015 - 7:07am USER: garry.ferrari

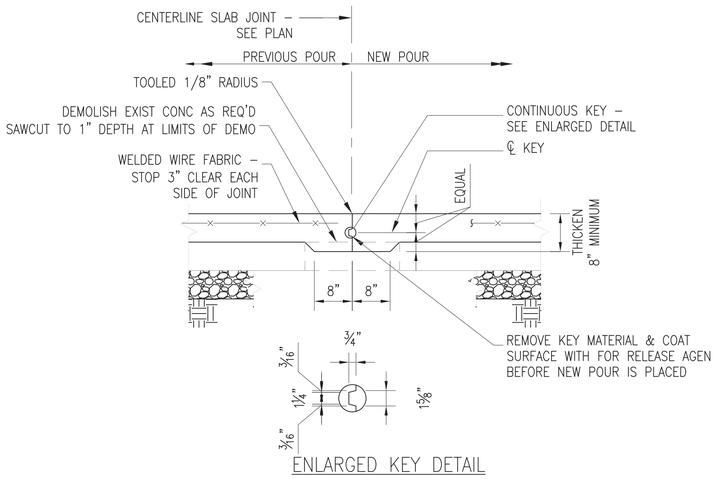

KEYED CONSTRUCTION JOINT DETAIL
NOT TO SCALE

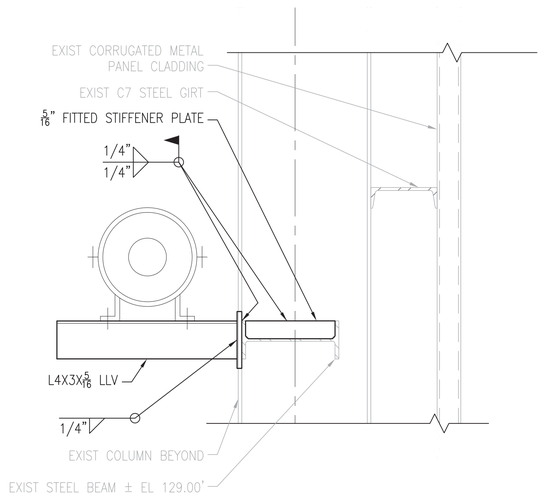

SECTION
SCALE: 1 1/2" = 1'–0" S–104 C2

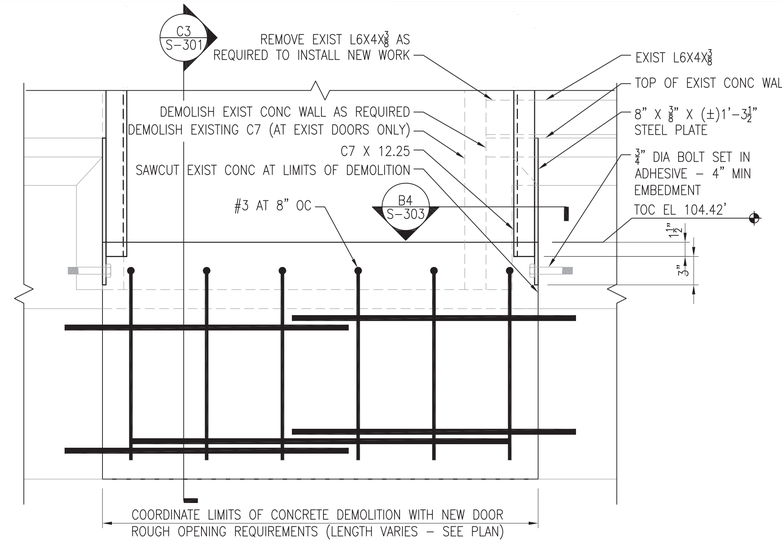

SECTION
SCALE: 1 1/2" = 1'–0" S–301 C4

SECTION
SCALE: 1 1/2" = 1'–0" S–103, S–104 B2

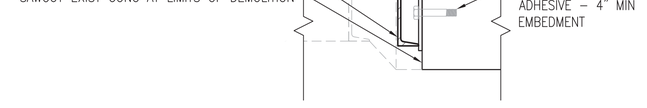

SECTION
SCALE: 1 1/2" = 1'–0" S–303 B4

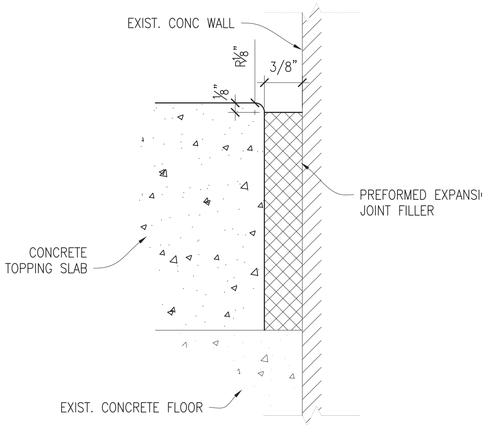

TYPICAL ISOLATION JOINT DETAIL
SCALE: NONE

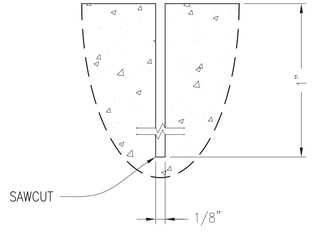

TYPICAL SAWCUT CONTROL JOINT
SCALE: NONE

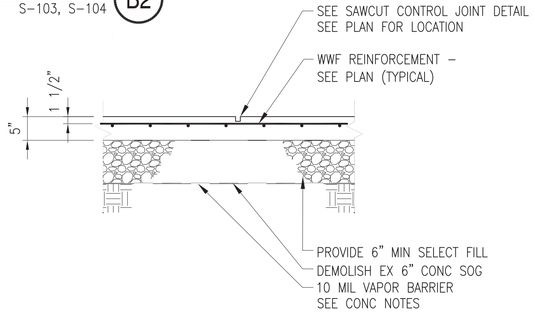

TYPICAL 5" SLAB ON GRADE DETAIL
NOT TO SCALE

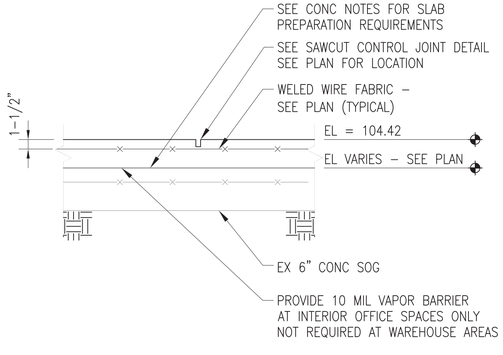

TYPICAL CONCRETE TOPPING SLAB DETAIL
NOT TO SCALE

GRAPHIC SCALE
1–1/2"=1'–0" 0 6" 1' 1'–6"

APPR	
DATE	
DESCRIPTION	
SYM	

NAVFAC

A/E INFO

APPROVED
FOR COMMANDER NAVFAC 3/25/15

ACTIVITY
SATISFACTORY TO DATE 3-25-15

DES	DRW	CHK
GTF	GTF	JGW

<<PM/DM>>	R. M. RUSSELL
BRANCH MANAGER	J.A.J
ENGR DIRECTOR	Ralph D. Deal
CUSTOMER	

DEPARTMENT OF THE NAVY
NAVAL FACILITIES ENGINEERING COMMAND
PWD PORTSMOUTH

NAVAL FACILITIES ENGINEERING COMMAND – MID ATLANTIC
NORFOLK NAVAL SHIPYARD – PORTSMOUTH, VIRGINIA

NORFOLK NAVAL SHIPYARD
PORTSMOUTH, VIRGINIA

B260 EXTENSIVE REPAIRS

FOUNDATION AND FRAMING DETAILS

SCALE: AS NOTED
EPROJECT NO.: 1146716
CONSTR. CONTR. NO.: N40085–15–R–0018
NAVFAC DRAWING NO.: 12681974
SHEET 20 OF 118

S-303

DRAWFORM REVISION: 10 MARCH 2009

FILE NAME: P:\VA\NNSY\Buildings\0260\2011_1146716_Nuclear Materials Wtse Repairs\B_Design\Drawings\BLDG260–1146716–S–301 to S–308.dwg LAYOUT NAME: S–303 PLOTTED: Tuesday, March 17, 2015 – 7:08am USER: garry.ferrari

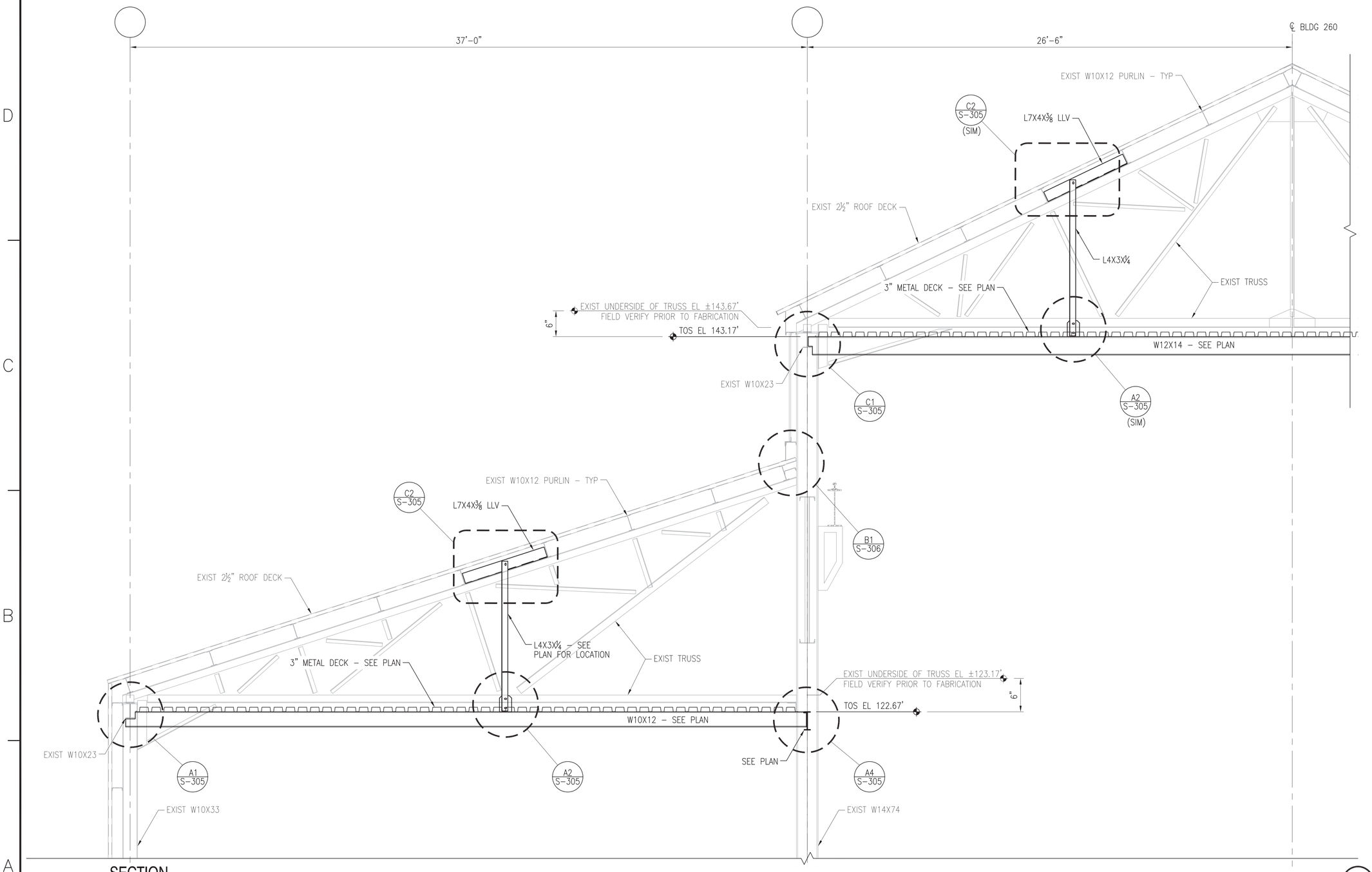

SECTION

SCALE: 3/8" = 1'-0"

S-103, S-104 (A1)

GRAPHIC SCALE

3/8"=1'-0" 0' 2' 4' 6'

NO.	DESCRIPTION	DATE	APPR

NAVFAC

SEAL

A/E INFO

APPROVED
FOR RALPH DEAL 3/23/15
FOR COMMANDER NAVFAC

ACTIVITY
SATISFACTORY TO DATE 3-24-15

DES	GTF	DRW	GTF	CHK	JGW

<<PM/DM>> R. M. RUSSELL
BRANCH MANAGER
ENGR DIRECTOR Ralph D. Deal
CUSTOMER

DEPARTMENT OF THE NAVY
NAVAL FACILITIES ENGINEERING COMMAND
PWD PORTSMOUTH

NAVAL FACILITIES ENGINEERING COMMAND – MID ATLANTIC
NORFOLK NAVAL SHIPYARD – PORTSMOUTH, VIRGINIA

NORFOLK NAVAL SHIPYARD
PORTSMOUTH, VIRGINIA

B260 EXTENSIVE REPAIRS

FRAMING SECTIONS

SCALE: AS NOTED
EPROJECT NO.: 1146716
CONSTR. CONTR. NO.: N40085-15-R-0018
NAVFAC DRAWING NO.: 12681975
SHEET 21 OF 118

S-304

DRAWFORM REVISION: 10 MARCH 2009

FILE NAME: P:\VA\NNSY\Buildings\02601\2011_1146716_Nuclear Materials Wise Repairs\B_Design\Drawings\BLDG260-1146716-S-301 to S-308.dwg LAYOUT NAME: S-304 PLOTTED: Tuesday, March 17, 2015 - 7:08am USER: garry.ferrari

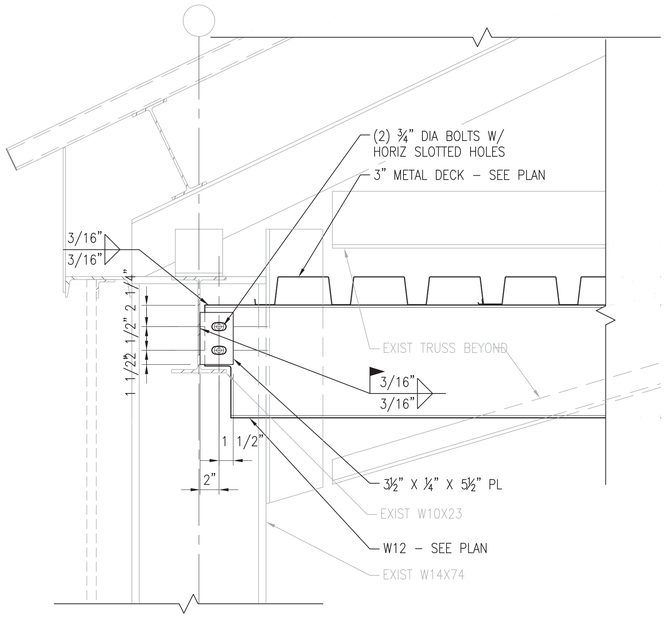

SECTION
SCALE: 1 1/2" = 1'–0"
S–304 C1

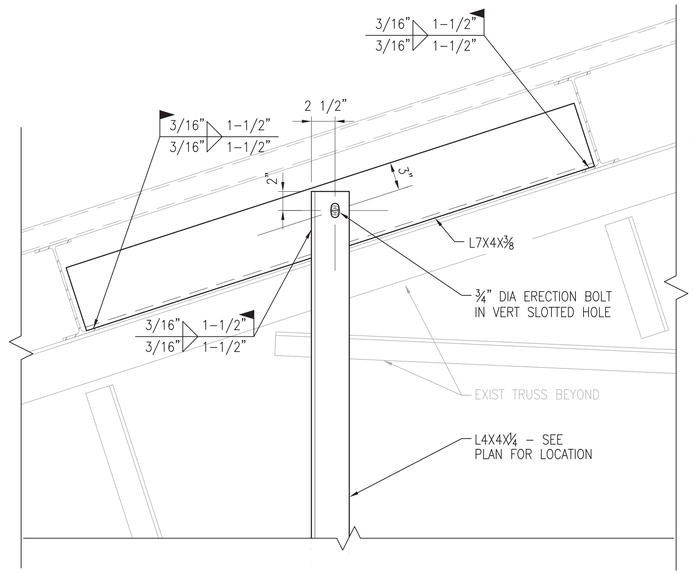

SECTION
SCALE: 1 1/2" = 1'–0"
S–304 C2

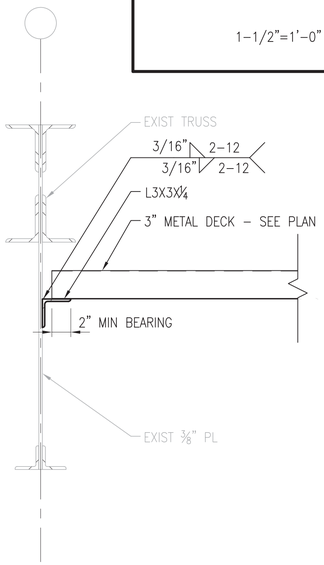

SECTION
SCALE: 1 1/2" = 1'–0"
S–305 C4

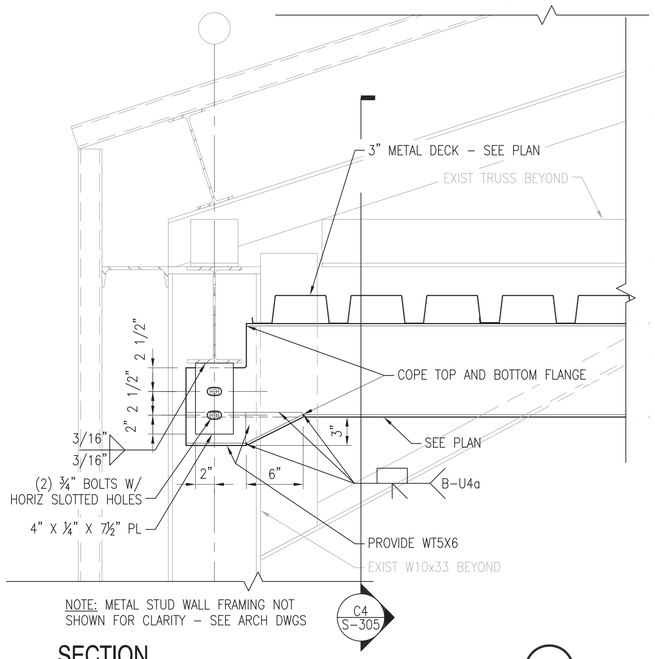

SECTION
SCALE: 1 1/2" = 1'–0"
S–304 A1

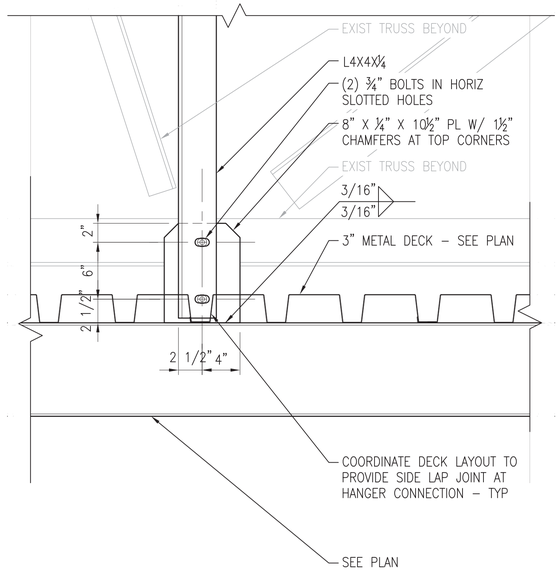

SECTION
SCALE: 1 1/2" = 1'–0"
S–304 A2

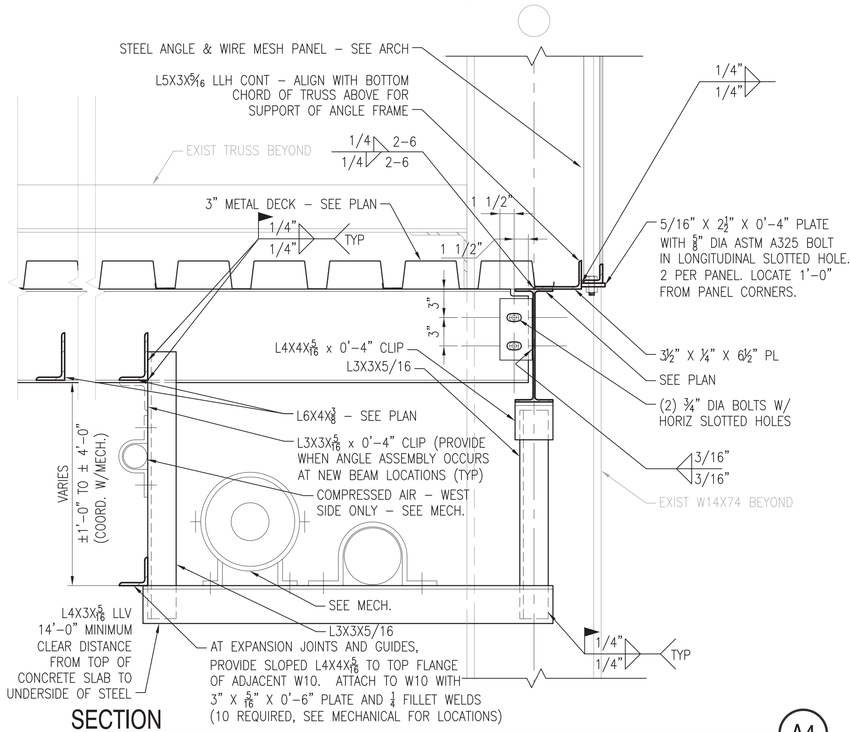

SECTION
SCALE: 1 1/2" = 1'–0"
S–103, S–104, S–304 A4

GRAPHIC SCALE

1–1/2"=1'–0" 0 6" 1' 1'–6"

APPR	DATE	DESCRIPTION	SYM

NAVFAC

SEAL

A/E INFO

APPROVED
Chris Bond 3/23/15
FOR RALPH DEAL
FOR COMMANDER NAVFAC

ACTIVITY
K. Bass
SATISFACTORY TO DATE 3-24-15

DES	GTF	DRW	GTF	CHK	JGW

<<PM/DM>>	R. M. RUSSELL
BRANCH MANAGER	J.A.J
ENGR DIRECTOR	Ralph D. Deal
CUSTOMER	K. Bass

DEPARTMENT OF THE NAVY
NAVAL FACILITIES ENGINEERING COMMAND
PWD PORTSMOUTH

NAVAL FACILITIES ENGINEERING COMMAND – MID ATLANTIC
NORFOLK NAVAL SHIPYARD – PORTSMOUTH, VIRGINIA

NORFOLK NAVAL SHIPYARD
PORTSMOUTH, VIRGINIA

B260 EXTENSIVE REPAIRS

FRAMING SECTIONS

SCALE:	AS NOTED
EPROJECT NO.:	1146716
CONSTR. CONTR. NO.	N40085–15–R–0018
NAVFAC DRAWING NO.	12681976
SHEET	22 OF 118

S-305

DRAWFORM REVISION: 10 MARCH 2009

FILE NAME: P:\VA\VNSY\Buildings\0260\2011_1146716_Nuclear Materials Whse Repairs\B_Design\Drawings\BLDG260–1146716–S–301 to S–308.dwg LAYOUT NAME: S–305 PLOTTED: Friday, March 20, 2015 – 12:14pm USER: gorny.ferrari

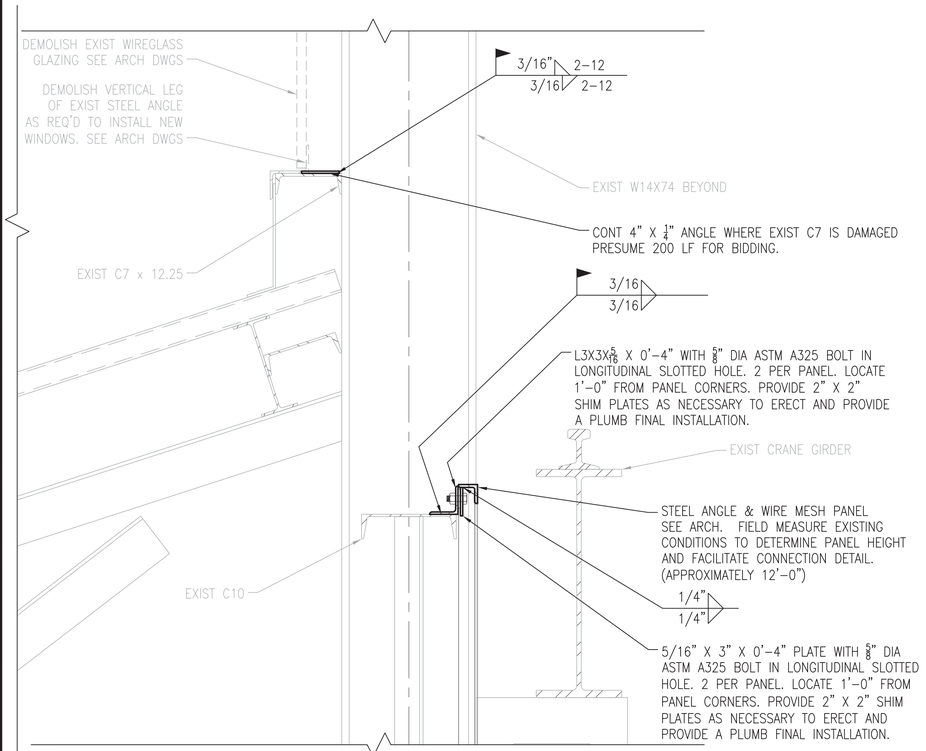

SECTION

SCALE: 1 1/2" = 1'-0" S-304 B1

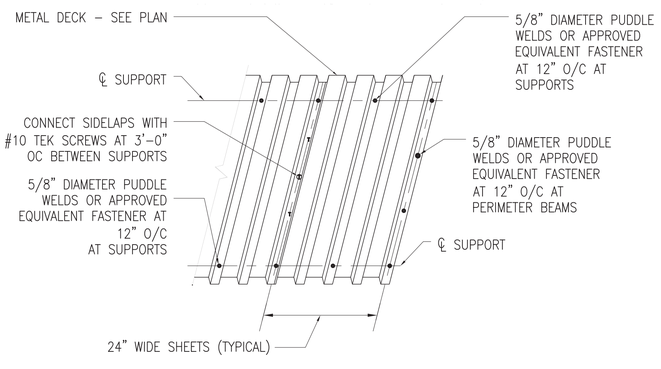

TYPICAL DECK ATTACHMENT DETAIL

NOT TO SCALE

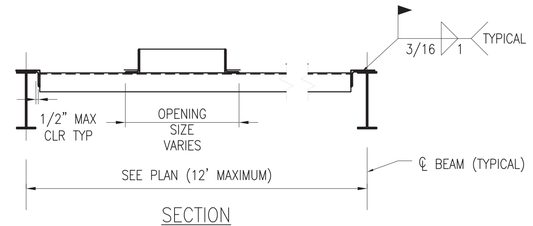

SECTION

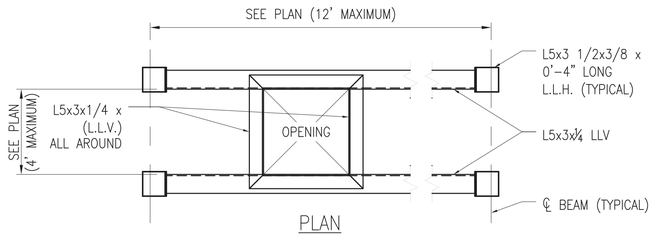

PLAN

NOTE: COORDINATE SIZE AND LOCATION OF ROOF OPENINGS WITH ACTUAL EQUIPMENT SELECTED.

TYPICAL EXHAUST FAN SUPPORT DETAIL

NOT TO SCALE

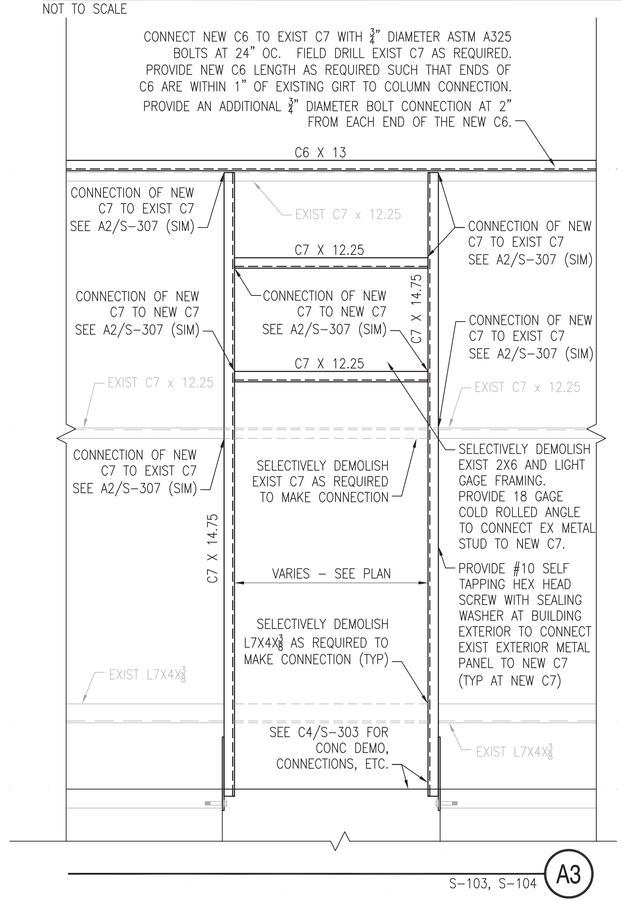

S-103, S-104 A3

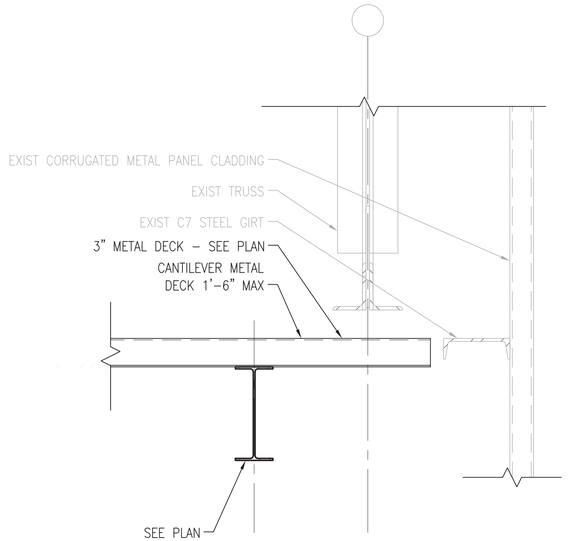

SECTION

SCALE: 1 1/2" = 1'-0" S-103, S-104 C4

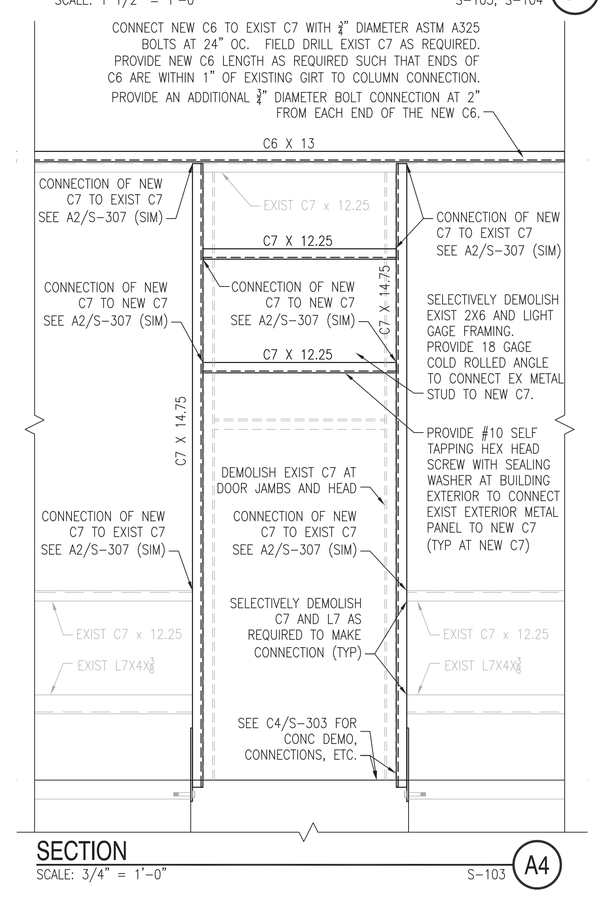

SECTION

SCALE: 3/4" = 1'-0" S-103 A4

GRAPHIC SCALE

1-1/2"=1'-0" 0 6" 1' 1'-6"

APPR	DATE	DESCRIPTION	STM

NAVFAC

SEAL

A/E INFO

APPROVED
FOR COMMANDER NAVFAC 3/23/15

ACTIVITY
SATISFACTORY TO DATE 3-23-15

DES	GTF	DRW	GTF	CHK	JGW

<<PM/DM>> R. M. RUSSELL
BRANCH MANAGER J.A.J
ENGR DIRECTOR Ralph D. Deal
CUSTOMER

DEPARTMENT OF THE NAVY
NAVAL FACILITIES ENGINEERING COMMAND – MID ATLANTIC
PWD PORTSMOUTH
NAVAL FACILITIES ENGINEERING COMMAND NORFOLK NAVAL SHIPYARD – PORTSMOUTH, VIRGINIA
NORFOLK NAVAL SHIPYARD PORTSMOUTH, VIRGINIA

B260 EXTENSIVE REPAIRS

FRAMING SECTIONS AND DETAILS

SCALE: AS NOTED
EPROJECT NO.: 1146716
CONSTR. CONTR. NO. N40085-15-R-0018
NAVFAC DRAWING NO. 12681977
SHEET 23 OF 118

S-306

DRAWFORM REVISION: 10 MARCH 2009

FILE NAME: P:\VA\VN57\Buildings\0260\2011_1146716_Nuclear Materials Wrse Repairs\B_Design\Drawings\BLDG260-1146716-S-301 to S-308.dwg LAYOUT NAME: S-306 PLOTTED: Tuesday, March 17, 2015 - 7:08am USER: garry.ferrari

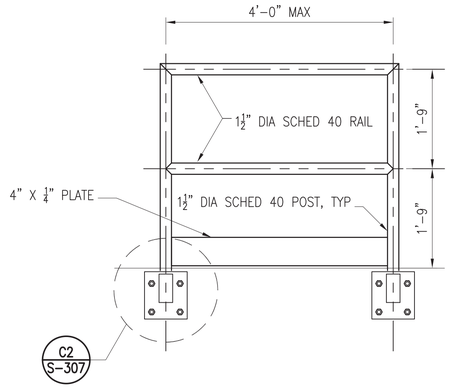

ELEVATION - REMOVABLE STEEL GUARD RAIL (C1)

SCALE: 3/4" = 1'–0" S-201, S-202

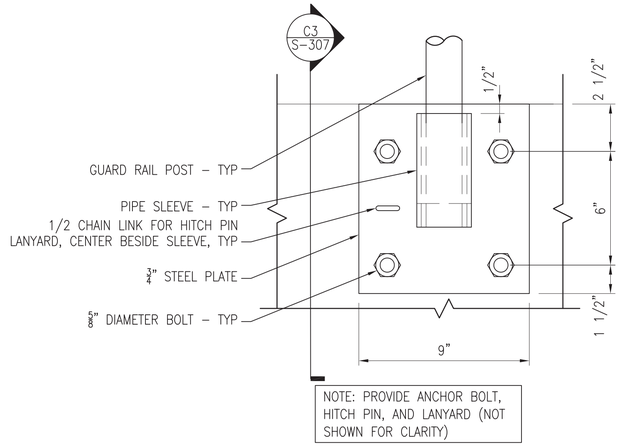

GUARD RAIL POST ANCHOR - ELEVATION (C2)

SCALE: 3" = 1'–0" S-307

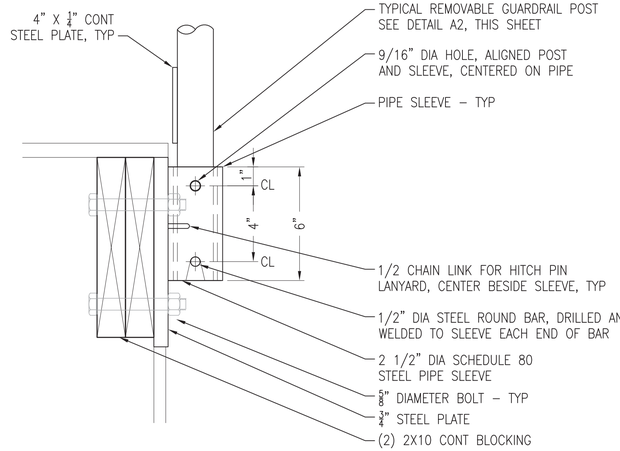

GUARD RAIL POST ANCHOR - SECTION (C3)

SCALE: 3" = 1'–0" S-307

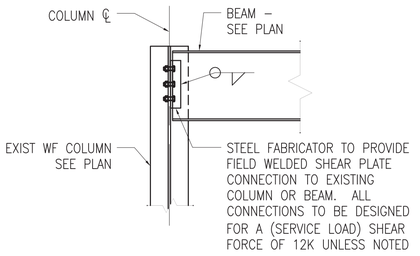

BEAM SHEAR CONNECTION DETAIL

NOT TO SCALE

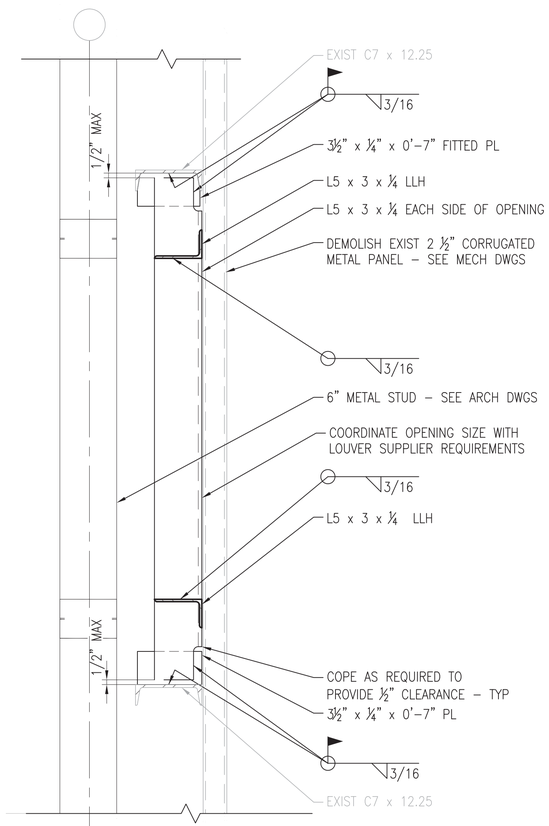

TYPICAL LOUVER OPENING DETAIL - 5" (A1)

SCALE: 1 1/2" = 1'–0"

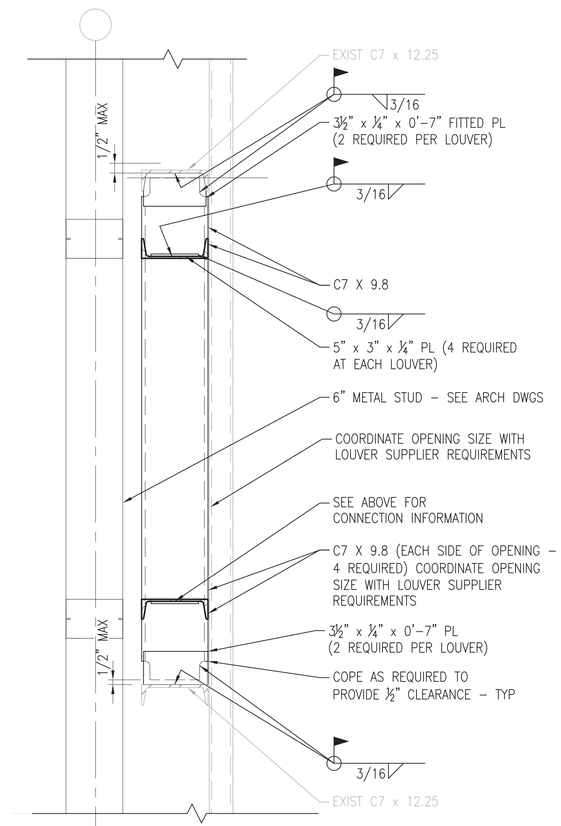

TYPICAL LOUVER OPENING DETAIL - 7" (A2)

SCALE: 1 1/2" = 1'–0"

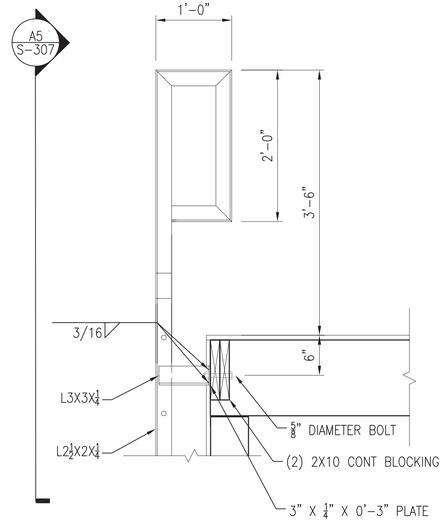

FIXED LADDER SECTION (A3)

SCALE: 1" = 1'–0" S-201, S-202

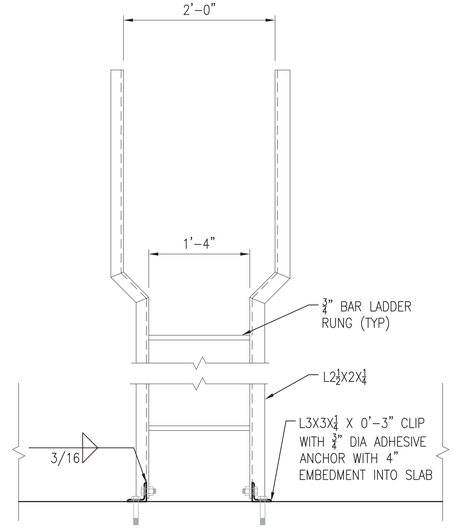

FIXED LADDER ELEVATION (A5)

SCALE: 1" = 1'–0" S-307

GRAPHIC SCALE

3"=1'–0" 0 3" 6" 9"

1–1/2"=1'–0" 0 6" 1' 1'–6"

1"=1'–0" 0' 1/2' 1' 2'

3/4"=1'–0" 0 1' 2' 3'

APPR	
DATE	
DESCRIPTION	
SYM	

NAVFAC

A/E INFO

APPROVED
FOR RALPH DEAL 3/23/15
FOR COMMANDER NAVFAC

ACTIVITY
SATISFACTORY TO DATE 3-23-15

DES	GTF	DRW	GTF	CHK	JGW

<<PM/DM>> R. M. RUSSELL
BRANCH MANAGER JAJ
ENGR DIRECTOR Ralph D. Deal
CUSTOMER

DEPARTMENT OF THE NAVY
NAVAL FACILITIES ENGINEERING COMMAND
PWD PORTSMOUTH

NAVAL FACILITIES ENGINEERING COMMAND ~ MID ATLANTIC
NORFOLK NAVAL SHIPYARD – PORTSMOUTH, VIRGINIA

NORFOLK NAVAL SHIPYARD PORTSMOUTH, VIRGINIA

B260 EXTENSIVE REPAIRS

FRAMING DETAILS

SCALE: AS NOTED
EPROJECT NO.: 1146716
CONSTR. CONTR. NO.: N40085-15-R-0018
NAVFAC DRAWING NO.: 12681978
SHEET 24 OF 118

S-307

DRAWFORM REVISION: 10 MARCH 2009

FILE NAME: P:\VA\NNSY\Buildings\0260\2011_1146716_Nuclear Materials Wtrse Repair\B_Design\Drawings\BLD0260-1146716-S-301 to S-308.dwg LAYOUT NAME: S-307 PLOTTED: Tuesday, March 17, 2015 - 7:09am USER: garry.ferrari

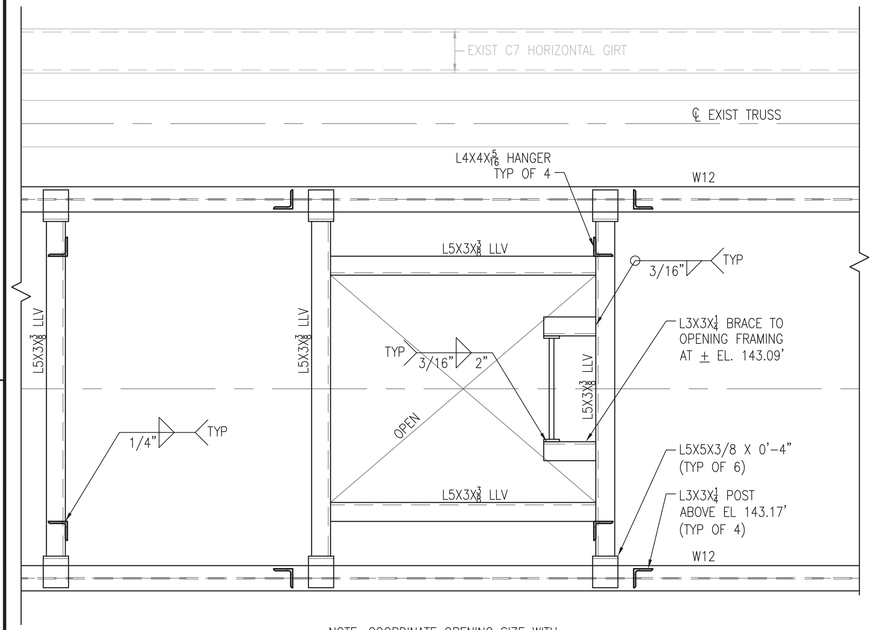

NOTE: COORDINATE OPENING SIZE WITH SELECTED HATCH MANUFACTURER'S INSTALLATION RECOMMENDATIONS AND REQUIREMENTS

PART PLAN AT CEILING FRAMING

SCALE: 1" = 1'-0" — S-308 — C1

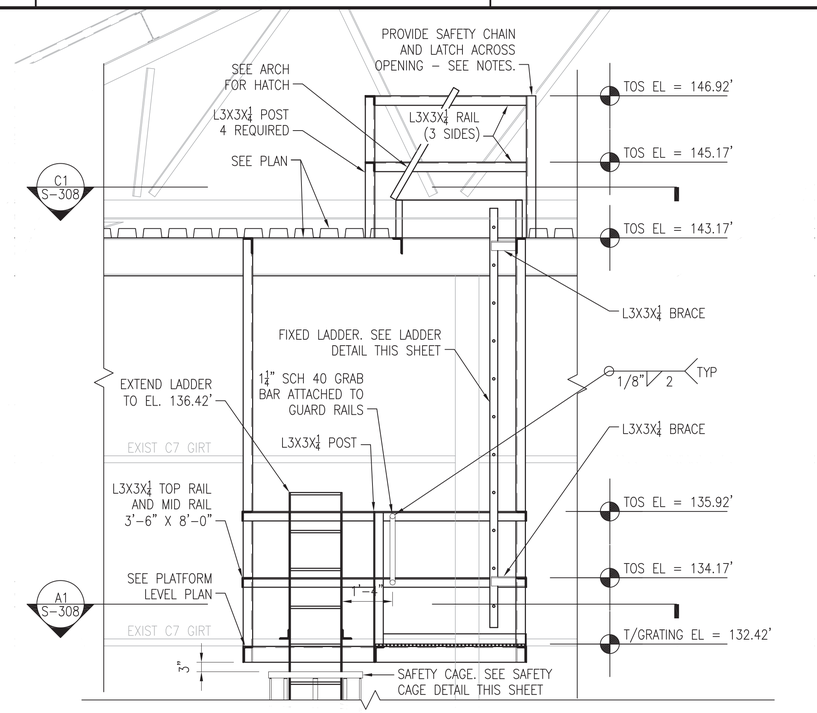

LADDER PLATFORM ELEVATION

SCALE: 1/2" = 1'-0" — S-103, S-104 — C3

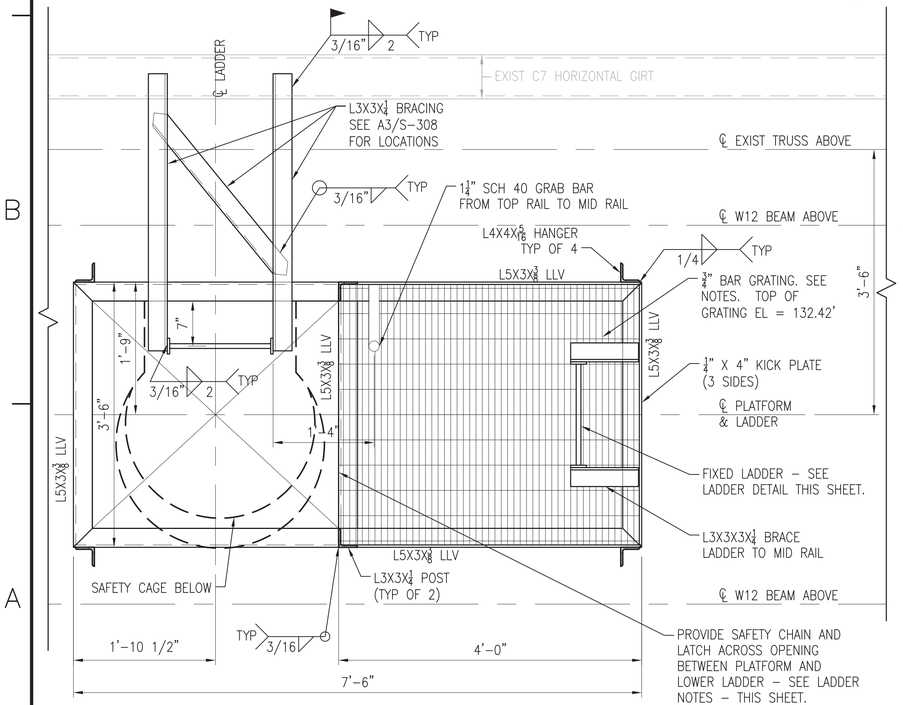

PART PLAN AT PLATFORM LEVEL

SCALE: 1" = 1'-0" — S-308 — A1

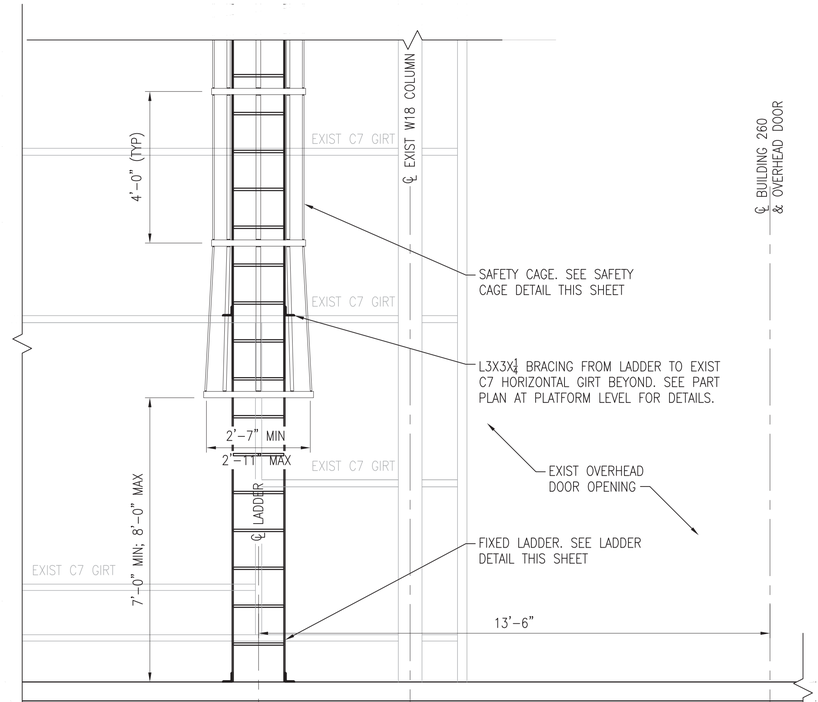

FIXED LADDER ELEVATION

SCALE: 1/2" = 1'-0" — S-101, S-102 — A3

LADDER NOTES

1. STEEL BAR GRATING SHALL BE CAPABLE OF SAFELY SUPPORTING A 100 PSF UNIFORM LIVE LOAD OR A 250 POUNDS PER LINEAR FOOT CONCENTRATED LIVE LOAD (LOCATED AT MID SPAN) FOR A SIMPLE SPAN OF 3'-6". TOTAL DEFLECTION SHALL NOT EXCEED 1/4" FOR THE UNIFORM LOAD CASE.
2. PROVIDE STEEL BAR GRATING WITH NOT LESS THAN 3/4" x 3/16" BEARING BARS SPACED AT 1 3/16" OC AND CROSS BARS SPACED AT 4". STEEL BAR GRATING SHALL MEET THE REQUIREMENTS OF NAAMM MBG 531, TYPE W-19-4 AT A MINIMUM. BAND ENDS OF GRATINGS WITH BARS OF THE SAME OR GREATER THICKNESS THAN THE METAL USED FOR GRATING. WELD BANDING BARS TO THE BEARING BARS AT LEAST EVERY FOURTH BAR AND IN EVERY CORNER. TACK WELD INTERVENING BARS. ORIENT BEARING BARS IN THE SHORT DIRECTION OF THE WORK PLATFORM. WELD GRATING TO FRAME AT EACH END USING A MINIMUM OF THREE (3) – 3/4" LONG, 3/16" FILLET WELDS, EQUALLY SPACED. IF GRATING IS PROVIDED IN MORE THAN ONE PIECE, PROVIDE THREE REQUIRED WELDS AT EACH END FOR EACH SECTION.
3. LADDER DETAILS AND GEOMETRY SHALL MEET OSHA FIXED LADDER REQUIREMENTS.
4. SAFETY CHAINS SHALL BE PROVIDED WHERE NOTED AT 1'-9" AND 3'-6" ABOVE THE ADJACENT WALKING SURFACE. PROVIDE 1/4" DIAMETER SOLID ROUND BAR WITH 3/16" FILLET WELD TO ADJACENT GUARD RAIL STRUCTURE. CHAINS AND HARDWARE SHALL HAVE A MINIMUM ULTIMATE BREAKING STRENGTH OF 3,900 LBS.
5. PROVIDE A 6'-0" HIGH LOCKING SECURITY GUARD TO PREVENT UNAUTHORIZED ACCESS TO ALL LADDERS. PROVIDE A PIANO STYLE HINGE, WITH HASPS TO HOLD THE GUARD OPEN AND CLOSED.

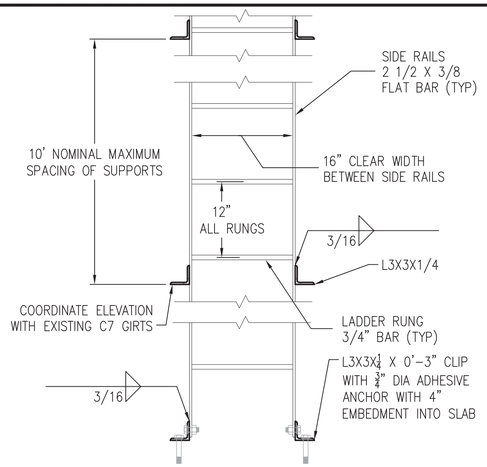

LADDER DETAIL

SCALE: 1" = 1'-0" — S-308 — C5

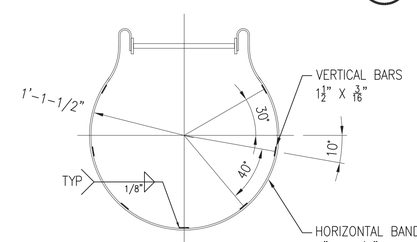

SAFETY CAGE DETAIL

SCALE: 1" = 1'-0" — S-308 — A5

GRAPHIC SCALE

1/2"=1'-0" 0' 1' 2' 4'

1"=1'-0" 0' 1/2' 1' 2'

APPR | DATE | DESCRIPTION | STM

NAVFAC

SEAL

A/E INFO

APPROVED
FOR COMMANDER NAVFAC
for RALPH DEAL 3/23/15

ACTIVITY

SATISFACTORY TO DATE 3-24-15

DES	GTF	DRW	GTF	CHK	JGW

<<PM/DM>> R. M. RUSSELL
BRANCH MANAGER JAJ
ENGR DIRECTOR Ralph D. Deal
CUSTOMER

DEPARTMENT OF THE NAVY
NAVAL FACILITIES ENGINEERING COMMAND – MID ATLANTIC
PWD PORTSMOUTH
NAVAL FACILITIES ENGINEERING COMMAND
NORFOLK NAVAL SHIPYARD – PORTSMOUTH, VIRGINIA
NORFOLK NAVAL SHIPYARD
PORTSMOUTH, VIRGINIA

B260 EXTENSIVE REPAIRS

FIXED LADDER DETAILS

SCALE: AS NOTED
EPROJECT NO.: 1146716
CONSTR. CONTR. NO. N40085-15-R-0018
NAVFAC DRAWING NO. 12681979
SHEET 25 OF 118

S-308

DRAWFORM REVISION: 10 MARCH 2009

FILE NAME: P:\VA\NNS\Buildings\0260\2011_1146716_Nuclear Materials Wise Repairs\B_Design\Drawings\BLDG260-1146716-S-301 to S-308.dwg LAYOUT NAME: S-308 PLOTTED: Tuesday, March 17, 2015 – 7:09am USER: garry.ferrari

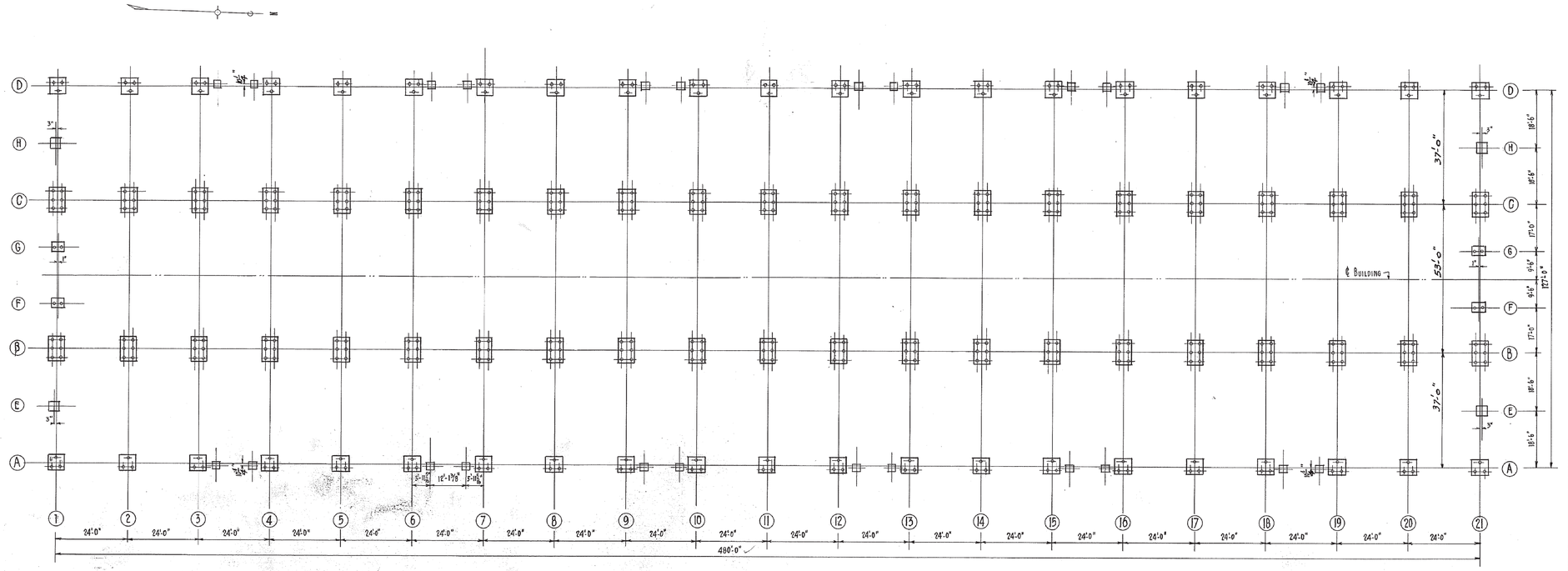

PILING AND FOUNDATION PLAN

SCALE: 1/16" = 1'-0"

GENERAL NOTES

6" SLAB THICKNESS DOES NOT INCLUDE SPECIAL 3/4" TOPPING FINISH.

FOR SPANDREL BEAMS, BEND 1 ROD AT 1/6 POINT OF SPAN AND CARRY TO 1/4 POINT OF ADJACENT SPAN. ADD 2 - 3/4" ϕ RODS IN TOP OF BEAMS AT SUPPORT

2" COVER FOR ALL REINFORCING, EXCEPT AS NOTED.

HOOK ENDS OF ALL RODS MADE DISCONTINUOUS.

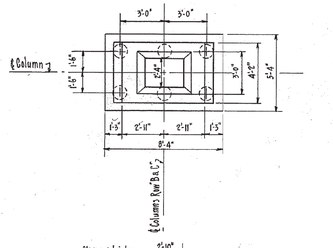

PIERS B2 TO B20 INCL. & C2 TO C20 INCL.

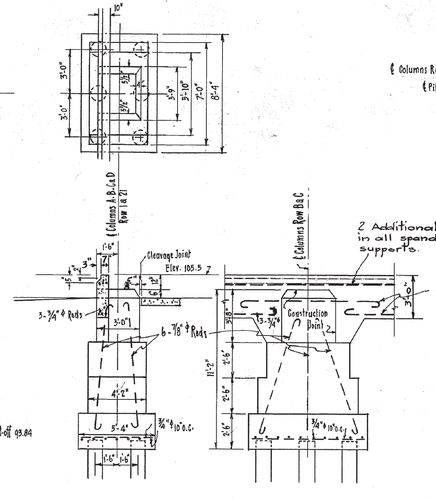

PIERS B1, B21, C1 & C21

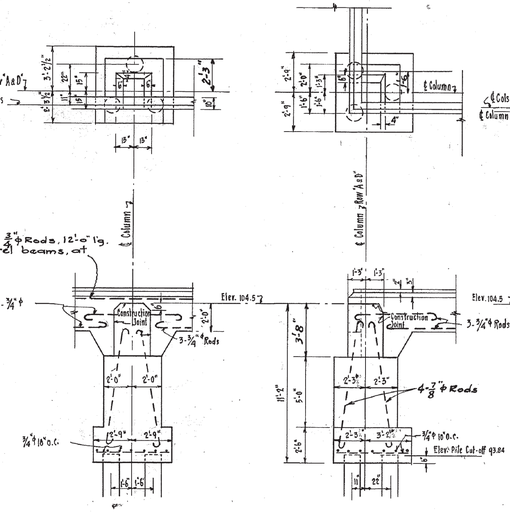

PIERS A2 TO A20-D2 TO D20

PIERS A1, A21, D1 & D21

PIERS E1, E21, H1 & H21

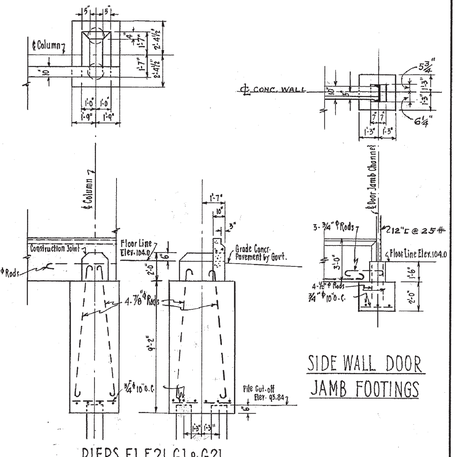

PIERS F1, F21, G1 & G21

SIDE WALL DOOR JAMB FOOTINGS

SCALE: 1/4" = 1'-0"

Revision	Date	Brief	By

Drawn by P.F. Mueller
Traced by
Checked by A.J.R.
Chief Dftmn. C.B.F.
In Charge

Y. & D. Drawing No. 132 298

P. W. Drawing No. 12 722

Scale: AS NOTED

Sheet 2 of 8 accompanying Specification No 9321

NORFOLK NAVY YARD, PORTSMOUTH, VA.

STOREHOUSE 260

FOR STORAGE OF BATTLESHIP MATERIAL

FOUNDATION PLAN

Approved 8/7/ 1939.

A. K. Fogg
Public Works Officer

APPR	DATE	DESCRIPTION	SYM

SEAL

A/E INFO

APPROVED
Chas Bonk 3/23/15
FOR RALPH DEAL
FOR COMMANDER NAVFAC

ACTIVITY
K. W. Bonk
SATISFACTORY TO DATE 3-23-15

DES	GTF	DRW	GTF	CHK	JGW

<<PM/DM>> R. M. RUSSELL
BRANCH MANAGER J.A.J
ENGR DIRECTOR Ralph D. Deal
CUSTOMER K. W. Bonk

DEPARTMENT OF THE NAVY
NAVAL FACILITIES ENGINEERING COMMAND
PWD PORTSMOUTH

NAVAL FACILITIES ENGINEERING COMMAND – MID ATLANTIC
NORFOLK NAVAL SHIPYARD – PORTSMOUTH, VIRGINIA

NORFOLK NAVAL SHIPYARD
PORTSMOUTH, VIRGINIA

B260 EXTENSIVE REPAIRS

REFERENCE – FOUNDATION PLAN

SCALE: NONE
EPROJECT NO.: 1146716
CONSTR. CONTR. NO. N40085-15-R-0018
NAVFAC DRAWING NO. 12681980
SHEET 26 OF 118

S-701

DRAWFORM REVISION: 10 MARCH 2009

FILE NAME: P:\VA\VNS\Buildings\0260\2011_1146716_Nuclear Materials Wrse Repairs\B_Design\Drawings\BLDG260-1146716-S-701.dwg LAYOUT NAME: S-701 PLOTTED: Tuesday, March 17, 2015 – 7:10am USER: gorry.ferrari

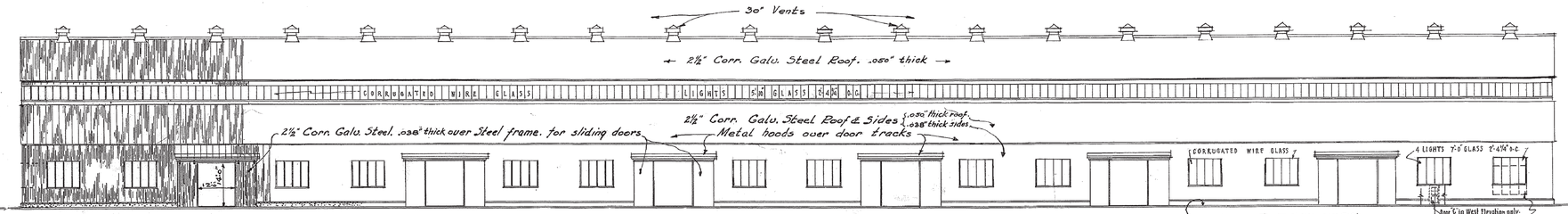

·EAST · ELEVATION·

·WEST· EL. SAME except window spacing in center bays and entr. door at office end. See plan.

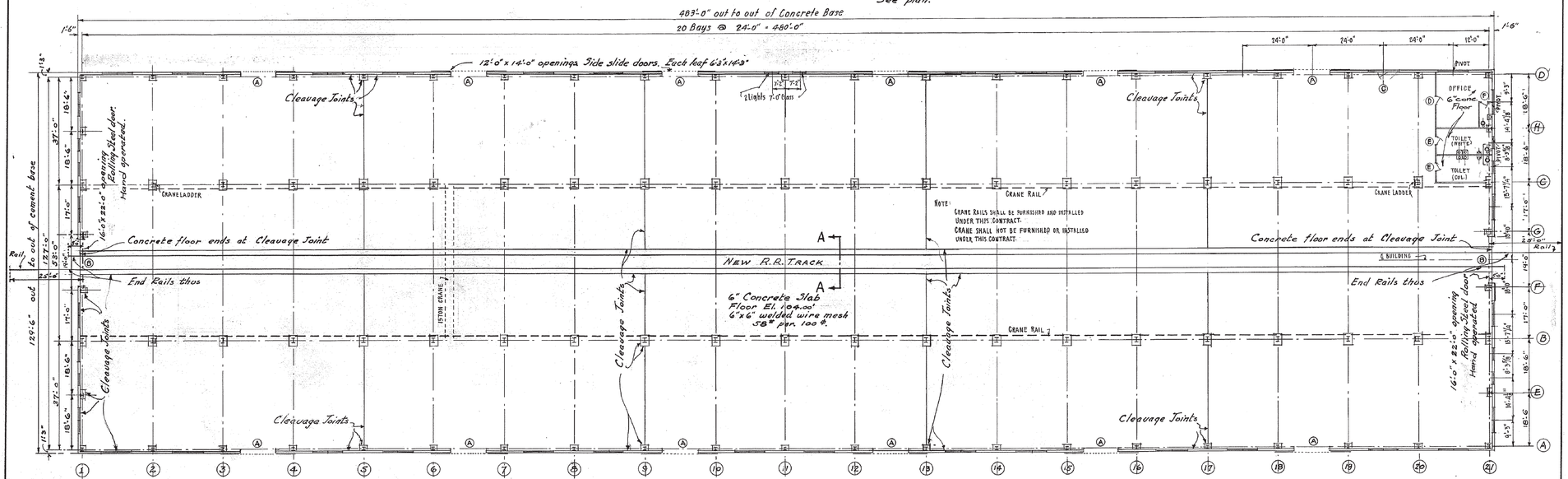

PLAN
Scale 1/16"=1'-0"

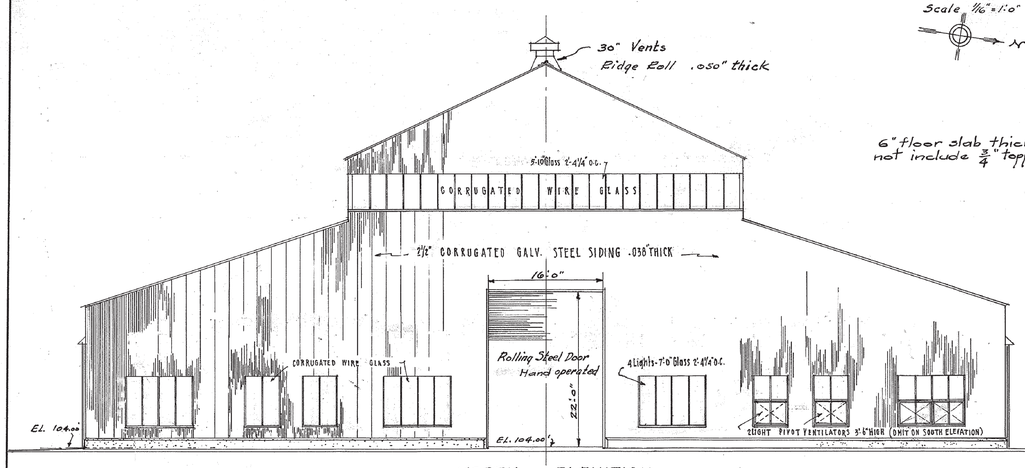

· NORTH · ELEVATION ·
SOUTH ELEVATION SIMILAR
Scale 1/8" = 1'-0"

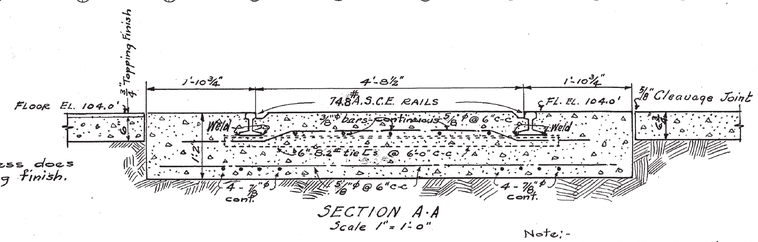

6" floor slab thickness does not include ¾" Topping finish.

SECTION A-A
Scale 1" = 1'-0"

Note:-
If under Bidding Item #3, the R.R. Track and supporting slab is omitted installation of concrete floor in lieu thereof will not be required.

DOOR SCHEDULE

SYM.	TYPE	SIZE	REMARKS
A	SLIDING STEEL	12'X14' opening	HAND OPERATED
B	ROLLING STEEL	16'X22' opening	HAND OPERATED
C	PRESSED METAL	2'-11⅞"X6'-11⅞"	UPPER PART GLAZED
D	WOOD	3'-0"X7'-0"	UPPER PART GLAZED
E	WOOD	2'-8"X7'-0"	5 CROSS PANELS
F	WOOD	2'-6"X6'-8"	5 CROSS PANELS

Sheet 3 of 8 accompanying Specification No 9321

Scale: 1/8" = 1'-0"

Revision	Date	Brief	By

Drawn by R.H.N.
Traced by R.H.N.
Checked by A.J.R.
Chief Dfmn. C.S.F.
In Charge

Y. & D. Drawing No. 132 299

P. W. Drawing No. 12723

NORFOLK NAVY YARD, PORTSMOUTH, VA.

STOREHOUSE 260
FOR STORAGE OF BATTLESHIP MATERIAL
PLAN AND ELEVATIONS

Approved 8/7/ 1939.
A. K. Fogg
Public Works Officer

APPR | DATE | DESCRIPTION | SYM

NAVFAC

SEAL

A/E INFO

APPROVED
Chas Beal.
FOR RALPH DEAL 2/23/15
FOR COMMANDER NAVFAC

ACTIVITY
K.W.B.
SATISFACTORY TO DATE 3-24-15

DES GTF | DRW GTF | CHK JGW
<<PM/EMO>> R. M. RUSSELL
BRANCH MANAGER J.A.J.
ENGR DIRECTOR Ralph D. Deal
CUSTOMER K.W.B.

DEPARTMENT OF THE NAVY
NAVAL FACILITIES ENGINEERING COMMAND
PWD PORTSMOUTH
NAVAL FACILITIES ENGINEERING COMMAND – MID ATLANTIC
NORFOLK NAVAL SHIPYARD – PORTSMOUTH, VIRGINIA
NORFOLK NAVAL SHIPYARD
PORTSMOUTH, VIRGINIA

B260 EXTENSIVE REPAIRS

REFERENCE – PLAN AND ELEVATIONS

SCALE: NONE
EPROJECT NO.: 1146716
CONSTR. CONTR. NO. N40085-15-R-0018
NAVFAC DRAWING NO. 12681981
SHEET 27 OF 118

S-702

DRAWFORM REVISION: 10 MARCH 2009

FILE NAME: P:\VA\VNS\Buildings\0260\2011_1146716_Nuclear Materials Whse Repairs\B_Design\Drawings\BLDG260-1146716-S-701.dwg LAYOUT NAME: S-702 PLOTTED: Tuesday, March 17, 2015 – 7:11am USER: gorry.ferrari

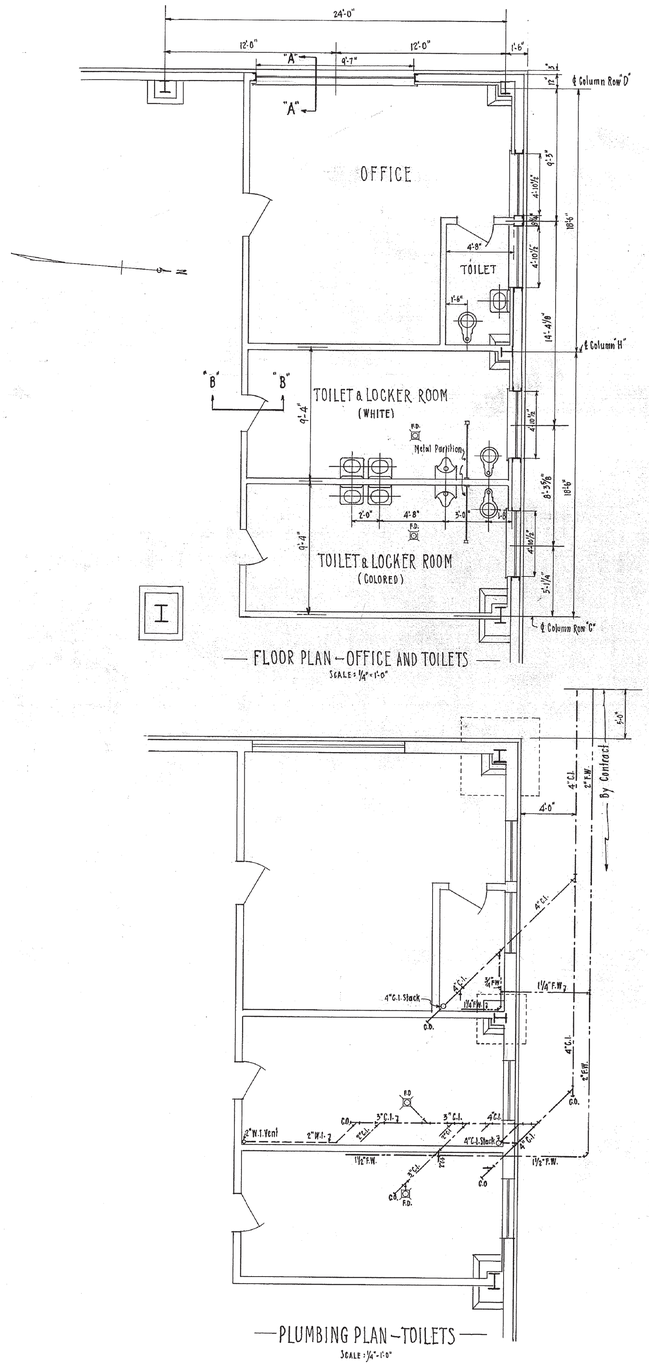

— FLOOR PLAN – OFFICE AND TOILETS —
SCALE: 1/4" = 1'-0"

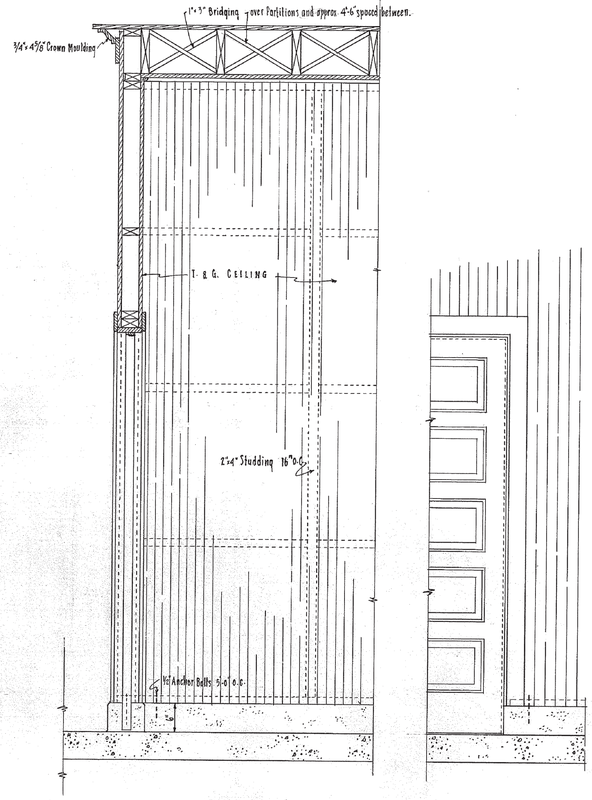

— SECTION "B-B" —
SCALE: 1" = 1'-0"

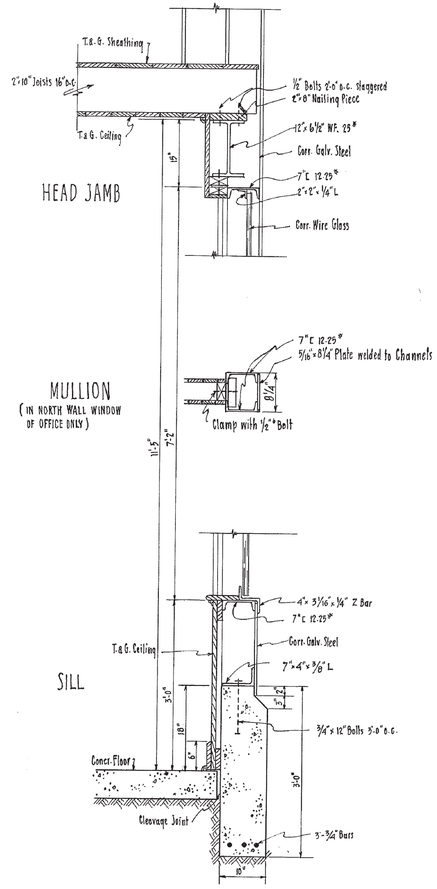

— SECTION "A-A" —
SCALE: 1" = 1'-0"

— PLUMBING PLAN – TOILETS —
SCALE: 1/4" = 1'-0"

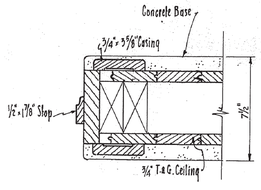

— SECTIONAL PLAN THRU' DOOR JAMB —
SCALE: 3" = 1'-0"

Revision	Date	Brief	By

Drawn by P.F. Mueller
Traced by " " "
Checked by A.J.R.
Chief Dfmn. C.S.F.
In Charge

Sheet 4 of 8 accompanying Specification № 9321.

Scale: AS NOTED

Y. & D. Drawing No. 132 300

P. W. Drawing No. 12724

NORFOLK NAVY YARD, PORTSMOUTH, VA.

STOREHOUSE 260
FOR STORAGE OF BATTLESHIP MATERIAL
PLAN OF OFFICE, TOILETS AND TYPICAL DETAILS

Approved 8/7/ 19

A. K. Fogg
Public Works Officer

SYM	DESCRIPTION	DATE	APPR

NAVFAC

SEAL

A/E INFO

APPROVED
FOR RALPH DEAL 3/23/15
FOR COMMANDER NAVFAC

ACTIVITY
SATISFACTORY TO DATE 3-23-15

DES	DRW	CHK
GTF	GTF	JGW

<<PM/DM>> R. M. RUSSELL
BRANCH MANAGER JAJ
ENGR DIRECTOR Ralph D. Deal
CUSTOMER

DEPARTMENT OF THE NAVY
NAVAL FACILITIES ENGINEERING COMMAND
PWD PORTSMOUTH
NAVAL FACILITIES ENGINEERING COMMAND ~ MID ATLANTIC
NORFOLK NAVAL SHIPYARD – PORTSMOUTH, VIRGINIA
NORFOLK NAVAL SHIPYARD
PORTSMOUTH, VIRGINIA

B260 EXTENSIVE REPAIRS

REFERENCE – PLAN OF OFFICE, TOILETS AND TYPICAL DETAILS

SCALE: NONE
EPROJECT NO.: 1146716
CONSTR. CONTR. NO. N40085-15-R-0018
NAVFAC DRAWING NO. 12681982
SHEET 28 OF 118

S-703

DRAWFORM REVISION: 10 MARCH 2009

FILE NAME: P:\VA\NNSY\Buildings\0260\2011_1146716_Nuclear Materials Whse Repairs\B_Design\Drawings\BLDG260-1146716-S-701.dwg LAYOUT NAME: S-703 PLOTTED: Tuesday, March 17, 2015 – 7:11am USER: garry.ferrari

Revision	Date	Brief	By

Drawn by H.H. BARRETT
Traced by "
Checked by A.J.R.
Chief Dfmn. C.S.F.
In Charge

NORFOLK NAVY YARD, PORTSMOUTH, VA.

STOREHOUSE 260
FOR STORAGE OF BATTLESHIP MATERIAL
TYPICAL CROSS SECTION & DETAILS

Y. & D. Drawing No. 132,301
P. W. Drawing No. 12,725

Sheet 5 of 8 accompanying Specification № 9321

Scale: 3/8" & 3" = 1 FT.

Approved 8/7/ 1939.
A. K. Fogg
Public Works Officer

SYM	DESCRIPTION	DATE	APPR

NAVFAC

SEAL

A/E INFO

APPROVED
[signature] FOR RALPH DEAL 3/23/15
FOR COMMANDER NAVFAC

ACTIVITY
[signature]
SATISFACTORY TO DATE 3-23-15

DES GTF | DRW GTF | CHK JGW
<<PM/DM>> R. M. RUSSELL
BRANCH MANAGER JAJ
ENGR DIRECTOR Ralph D. Deal
CUSTOMER [signature]

DEPARTMENT OF THE NAVY
NAVAL FACILITIES ENGINEERING COMMAND
NAVAL FACILITIES ENGINEERING COMMAND ~ MID ATLANTIC
PWD PORTSMOUTH NORFOLK NAVAL SHIPYARD – PORTSMOUTH, VIRGINIA
NORFOLK NAVAL SHIPYARD PORTSMOUTH, VIRGINIA

B260 EXTENSIVE REPAIRS

REFERENCE – TYPICAL CROSS SECTION & DETAILS

SCALE: NONE
EPROJECT NO.: 1146716
CONSTR. CONTR. NO. N40085-15-R-0018
NAVFAC DRAWING NO. 12681983
SHEET 29 OF 118
S-704

DRAWFORM REVISION: 10 MARCH 2009

FILE NAME: P:\VA\NNSY\Buildings\0260\2011_1146716_Nuclear Materials Whse Repairs\B_Design\Drawings\BLDG260-1146716-S-701.dwg LAYOUT NAME: S-704 PLOTTED: Tuesday, March 17, 2015 – 7:14am USER: garry.ferrari

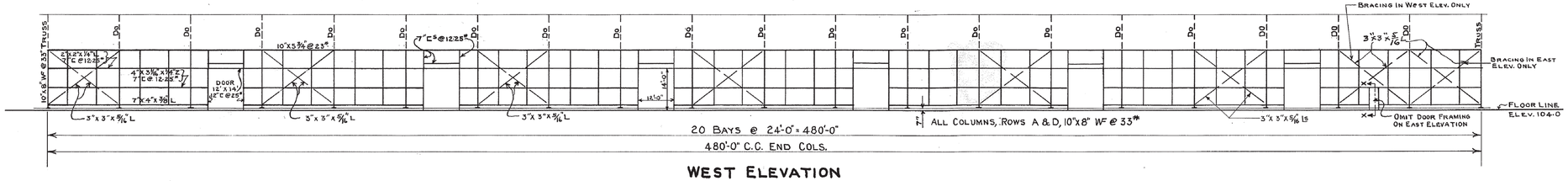

WEST ELEVATION
COL. LINE D.
COL. LINE "A" SIMILAR EXCEPT AS NOTED
SCALE 1/16" = 1'-0"

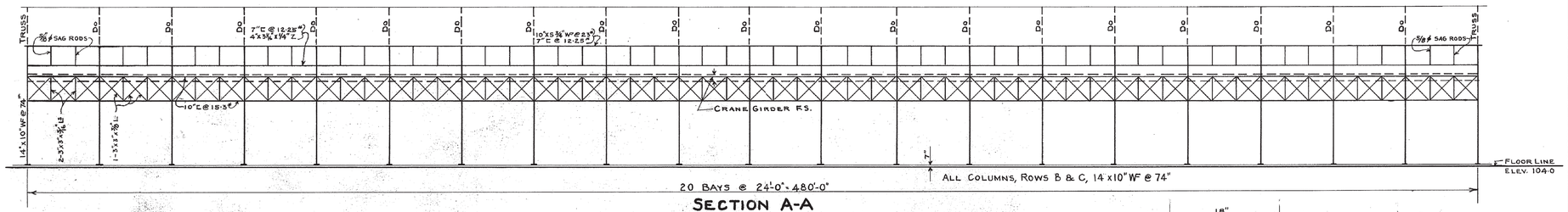

SECTION A-A
COL. LINE C.
COL. LINE "B" SIMILAR
SCALE 1/16" = 1'-0"

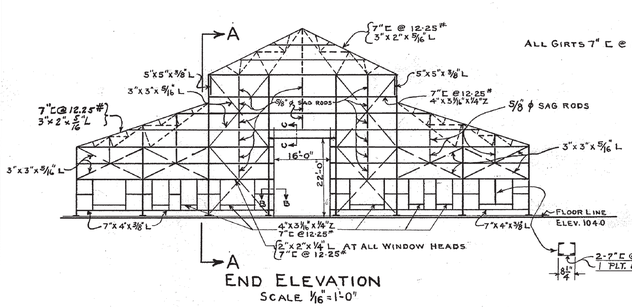

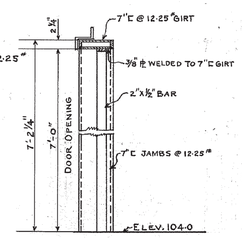

SECTION X-X
SCALE 1" = 1'-0"

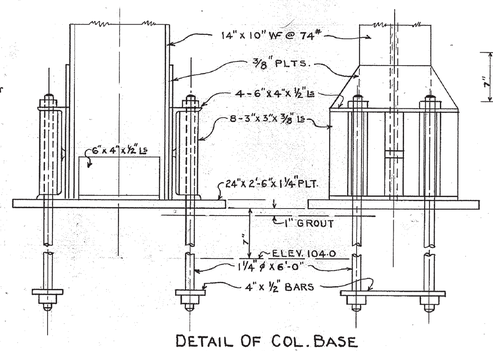

DETAIL OF COL. BASE
"B" & "C" ROWS
SCALE 1½" = 1'-0"

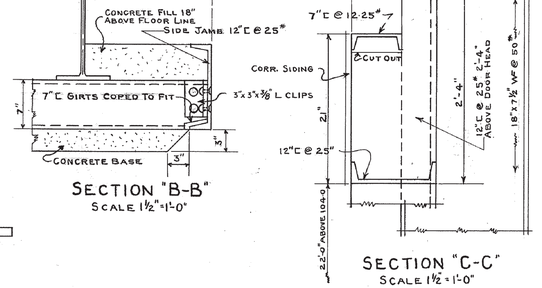

SECTION "B-B"
SCALE 1½"=1'-0"

SECTION "C-C"
SCALE 1½" = 1'-0"

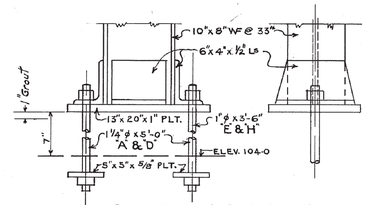

BASE COLS A, D, E & H ROW
SCALE 1½" 1'-0"

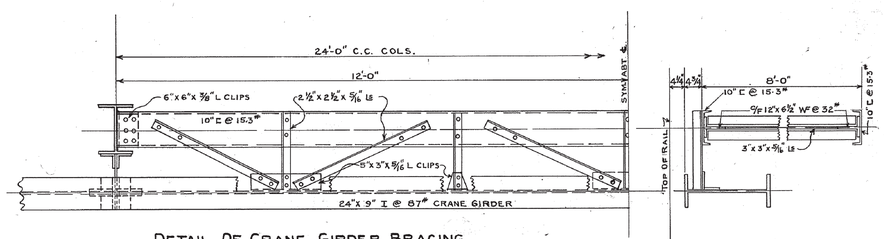

DETAIL OF CRANE GIRDER BRACING
SCALE 3/4" = 1'-0"

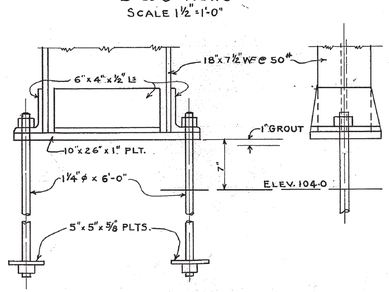

BASE COLS. "F" & "G" ROW
SCALE 1½"=1'-0"

Revision	Date	Brief	By

Drawn by H.H.B ϕ A.J.R
Traced by J.L.H.
Checked by B.J.R.
Chief Dfmn. C.F.F.
In Charge

Y. & D. Drawing No. 132302

P. W. Drawing No. 12726

Sheet 6 of 8 accompanying Specification No. 9321

Scale: AS NOTED

NORFOLK NAVY YARD, PORTSMOUTH, VA.

STOREHOUSE NAVY 960

FOR STORAGE OF BATTLESHIP MATERIAL

FRAMING PLAN AND DETAILS

Approved 8/7/ 1937.

Public Works Officer

APPR	DATE	DESCRIPTION	SYM

NAVFAC

SCAL

A/E INFO

APPROVED
FOR RALPH DEAL 7/23/15
FOR COMMANDER NAVFAC

ACTIVITY

SATISFACTORY TO DATE 7-23-15

DES	GTF	DRW	GTF	CHK	JGW

<<PM/DM>> R. M. RUSSELL
BRANCH MANAGER J.A.J
ENGR DIRECTOR Ralph D. Deal
CUSTOMER

DEPARTMENT OF THE NAVY
NAVAL FACILITIES ENGINEERING COMMAND
PWD PORTSMOUTH

NAVAL FACILITIES ENGINEERING COMMAND ~ MID ATLANTIC
NORFOLK NAVAL SHIPYARD ~ PORTSMOUTH, VIRGINIA

NORFOLK NAVAL SHIPYARD
PORTSMOUTH, VIRGINIA

B260 EXTENSIVE REPAIRS

REFERENCE ~ FRAMING PLANS AND DETAILS

SCALE: NONE
EPROJECT NO.: 1146716
CONSTR. CONTR. NO.: N40085-15-R-0018
NAVFAC DRAWING NO.: 12681984
SHEET 30 OF 118

S-705

DRAWFORM REVISION: 10 MARCH 2009

FILE NAME: P:\VA\NNSY\Buildings\V260\2011_1146716_Nuclear Materials Wise Repairs\B_Design\Drawings\BUD260-1146716-S-701.dwg LAYOUT NAME: S-705 PLOTTED: Tuesday, March 17, 2015 - 7:14am USER: gorry.ferrari

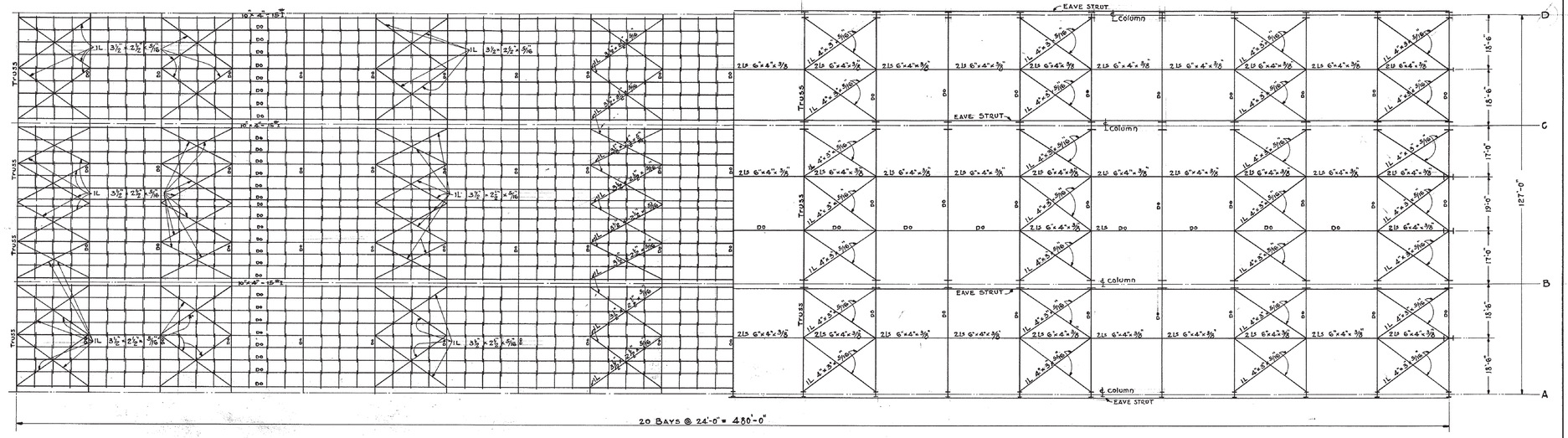

HALF PLAN OF ROOF
scale $\frac{1}{16}$ = 1'-0"

HALF PLAN OF BOTTOM CHORD BRACING
scale $\frac{1}{16}$ = 1'-0"

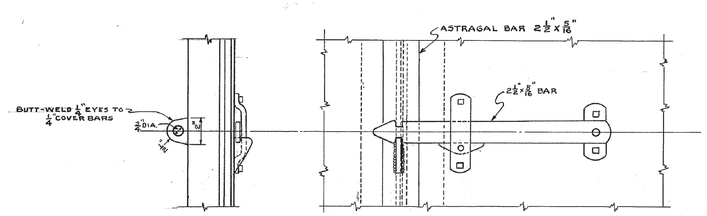

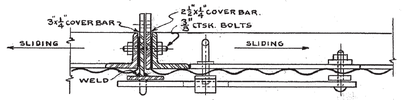

SECTION THRU DOOR LATCH
Scale:- 3" = 1'-0"

SLIDING DOOR DETAILS

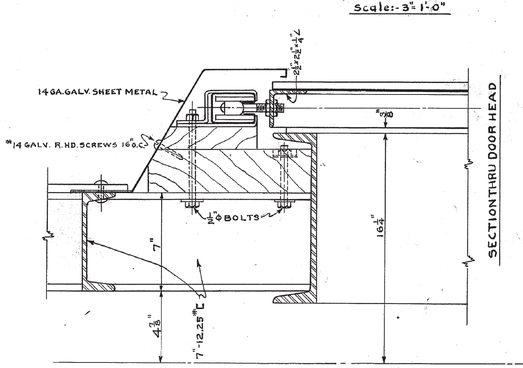

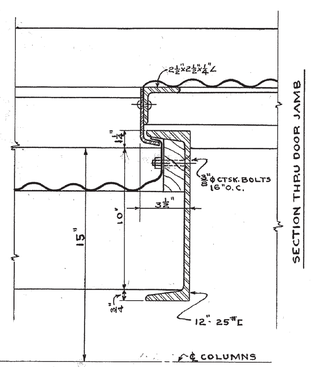

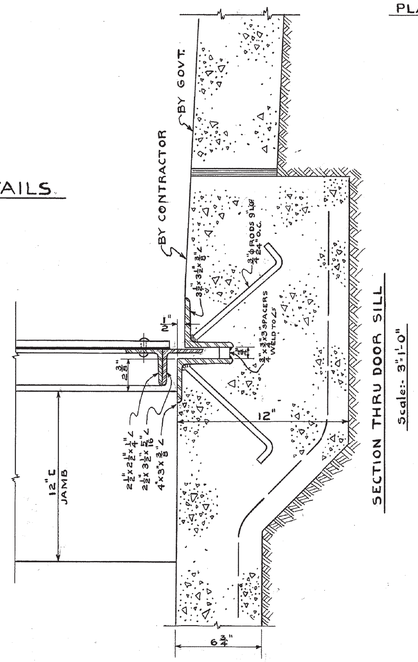

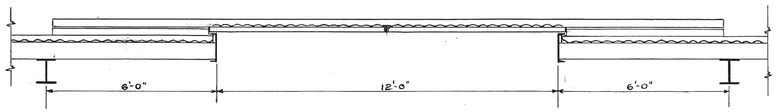

PLAN OF DOOR OPENING
Scale:- ½" = 1'-0"

Revision	Date	Brief	By

Drawn by H.H.B & F.M.
Traced by CALCOTT
Checked by A.W.R.
Chief Dftm. C.S.F.
In Charge H.M.

Y. & D. Drawing No. 132303

P. W. Drawing No. 12727

Sheet 7 of 8 Accompanying Specification NO. 9321

Scale: Noted.

NORFOLK NAVY YARD, PORTSMOUTH, VA.

STOREHOUSE
Bldg 260
FOR STORAGE OF BATTLESHIP MATERIAL
ROOF FRAMING PLANS & DETAILS

Approved 8/7/ 1939
A. K. Young
Public Works Officer

APPR | DATE | DESCRIPTION | SYM

NAVFAC

SEAL

A/E INFO

APPROVED
Ch Bach
FOR RALPH DEAL 3/23/15
FOR COMMANDER NAVFAC

ACTIVITY
K.J.B.
SATISFACTORY TO DATE 3-23-15

DES	GTF	DRW	GTF	CHK	JGW

<<PM/DM>> R. M. RUSSELL
BRANCH MANAGER JAJ
ENGR DIRECTOR Ralph D. Deal
CUSTOMER K.B.

DEPARTMENT OF THE NAVY
NAVAL FACILITIES ENGINEERING COMMAND
PWD PORTSMOUTH
NAVAL FACILITIES ENGINEERING COMMAND ~ MID ATLANTIC
NORFOLK NAVAL SHIPYARD ~ PORTSMOUTH, VIRGINIA
NORFOLK NAVAL SHIPYARD PORTSMOUTH, VIRGINIA

B260 EXTENSIVE REPAIRS

REFERENCE ~ ROOF FRAMING PLANS & DETAILS

SCALE: NONE
EPROJECT NO.: 1146716
CONSTR. CONTR. NO. N40085-15-R-0018
NAVFAC DRAWING NO. 12681985
SHEET 31 OF 118

S-706

DRAWFORM REVISION: 10 MARCH 2009

FILE NAME: P:\VA\NNSY\Buildings\0260\2011_1146716_Nuclear Materials Wipe Repairs\B_Design\Drawings\BUD0260-1146716-S-701.dwg LAYOUT NAME: S-706 PLOTTED: Tuesday, March 17, 2015 - 7:15am USER: gorry.ferrari

ARCHITECTURAL SYMBOLS

- L1 — LOUVER TYPE INDICATOR; LOUVER NUMBER
- 2 — SPECIALTY ITEM NUMBER; SPECIALTY ITEM IDENTIFIER
- A — WINDOW TYPE LETTER; WINDOW TYPE IDENTIFIER
- A — PARTITION IN PLAN; PARTITION TYPE INDICATOR; PARTITION TYPE LETTER (REFER TO PARTITION SCHEDULE)
- 101 — DOOR IDENTIFIER; DOOR NUMBER (REFER TO DOOR SCHEDULE)

MATERIALS LEGEND

SECTION VIEW	WOOD – ROUGH	WOOD BLOCKING	
	CONCRETE MASONRY UNIT	BRICK	
	CAST–IN–PLACE CONCRETE	PLYWOOD–LARGE SCALE	
	STEEL	GLASS–LARGE SCALE	
	EARTH/COMPACT FILL	ACOUSTICAL TILE	
	BATT/LOOSE FILL INSULATION	PLYWOOD–SMALL SCALE	
	POROUS FILL/GRAVEL	CERAMIC TILE–LARGE SCALE	
	RIGID INSULATION	SAND/MORTAR/PLASTER	
	GYPSUM BOARD		
	RESILIENT FLOORING/ PLASTIC LAMINATE		
	ALUMINUM		
	FINISHED WOOD		
	MARBLE		
ELEVATION/PLAN VIEW	CONCRETE/GYPSUM BOARD		
	SHEET METAL–LARGE SCALE		
	GLASS		

GENERAL ARCHITECTURAL NOTES

1. ALL ITEMS INDICATED TO BE REMOVED SHALL BE DISPOSED OF OFF SITE BY THE CONTRACTOR UNLESS OTHERWISE NOTED.
2. ALL MATERIALS SHALL BE NEW AND PROVIDED BY THE CONTRACTOR UNLESS SPECIFICALLY NOTED AS EXISTING OR AS PROVIDED BY THE GOVERNMENT.
3. ALL WOOD BLOCKING AND MISCELLANEOUS STEEL SHOWN IN DETAILS AND SECTIONS SHALL BE CONTINUOUS UNLESS SPECIFICALLY NOTED OTHERWISE.
4. THE CONTRACTOR SHALL VERIFY ALL FIELD CONDITIONS AND DIMENSIONS PRIOR TO PROCEEDING WITH THE WORK. DIMENSIONS FOR EXISTING WORK ARE APPROXIMATE. ALL DISCREPANCIES SHALL BE BROUGHT TO THE IMMEDIATE ATTENTION OF THE CONTRACTING OFFICER IN WRITING.
5. DEMOLITION OF PLUMBING, MECHANICAL AND ELECTRICAL ITEMS INDICATED ON THE ARCHITECTURAL DRAWINGS IS NOT INTENDED TO INCLUDE ALL NECESSARY DEMOLITION WORK FOR THESE ITEMS. REFER TO FIRE PROTECTION, PLUMBING, MECHANICAL AND ELECTRICAL DEMOLITION DRAWINGS FOR ADDITIONAL INFORMATION.
6. DIMENSIONS INDICATED FOR NEW WORK ARE TO FACE OF STUD, FACE OF MASONRY OR FACE OF EXISTING SURFACES UNLESS OTHERWISE NOTED.
7. SEE SHEET G–003 FOR HAZARDOUS MATERIALS NOTES AND HAZARDOUS ENERGY CONTROL NOTES.
8. SEE SHEET AD–107 FOR REFERENCE DRAWING OF BUILDING–IN–BUILDING (BIB) AT THE NORTH END, LOCATED BETWEEN COLUMN LIINES 20 & 21, AND C & D.

ARCHITECTURAL ABBREVIATIONS

AB	ANCHOR BOLT	CNSTR	CONSTRUCTION	FIN	FINISH	MTL	METAL			STD	STANDARD
ACS PNL	ACCESS PANEL	CONT	CONTINUE	FG	FIGURE	MFG	MANUFACTURING			STOR	STORAGE
ADJ	ADJUSTABLE	CORR	CORRIDOR	FIN FLR	FINISHED FLOOR	MIN	MINIMUM, MINUTE			STR	STRAIGHT, STRIKE, STRINGER
ALUM	ALUMINUM	CPT	CARPET	FOF	FACE OF FINISH	MG	MIRROR GLASS			SUSP	SUSPEN
ALT	ALTERNATE, ALTITIUDE	CT	CERAMIC TILE	FOM	FACE OF MASONRY	MO	MOTOR OPERATED, MASONRY OPENING			T&B	TOP AND BOTTOM
ANOD	ANODIZED	CTR	CENTER	FOS	FACE OF STUD, FACE OF SLAB					TEL	TELEPHONE
APPROX	APPROXIMATE	D	DEPTH, DEEP	FR	FRAME, FIRE RATING, FIRE RESISTANT	MTD	MOUNTED			TOS	TOP OF SLAB/STEEL
ARCH	ARCHITECT	DEG	DEGREE	FRTW	FIRE RETARDANT TREATED WOOD	MTG	MOUNTING, MEETING			THRES	THRESHOLD
ASPH	ASPHALT	DEMO	DEMOLITION	FT	FOOT, FEET	MWP	MEMBRANE WATERPROOFING			THRU	THROUGH
ACST	ACOUSTICAL TILE CEILING	DET	DETAIL	FTG	FOOTING	N	NORTH	QT	QUARRY TILE	TYP	TYPICAL
BD	BOARD	DIA	DIAMETER	GA	GAGE	NIC	NOT IN CONTRACT	R	RADIUS, RISER	UON	UNLESS OTHERWISE NOTED
BLDG	BUILDING	DIM	DIMENSION	GALV	GALVANIZED	NO	NUMBER	RA	RETURN AIR	V	VOLT
BLW	BELOW	DS	DOWNSPOUT	GFCI	GROUND FAULT CIRCUIT INTERRUPT	NOM	NOMINAL	RAD	RETURN AIR DUCT	VAR	VARIATION
BM	BEAM	DW	DISHWASHER			NTS	NOT TO SCALE	RB	RESILIENT BASE	VB	VINYL BASE
BOT	BOTTOM	DR	DRAIN	GL	GLASS, GROUND LEVEL	OA	OUTSIDE AIR	RD	ROOF DRAIN, ROAD	VCT	VINYL COMPOSITION TILE
BOS	BOTTOM OF SLAB/STEEL	DWG	DRAWING	GR	GROSS	OC	ON CENTER	REFL	REFLECT	VENT	VENTILATION, VENTILATOR
BRG	BEARING	E	EAST	GSU	GLAZED STRUCTURAL UNIT	OD	OUTSIDE DIAMETER/DIMENSION	REFR	REFRIGERATION	VERT	VERTICAL
BIB	BUILDING–IN–BUILDING	EA	EACH	GYP	GYPSUM			REINF	REINFORCE	VEST	VESTIBULE
BTWN	BETWEEN	EIFS	EXTERIOR INSULATION FINISH SYSTEM	H	HIGH	OPH	OPPOSITE HAND	REQD	REQUIRED	VS	VENT STACK
C TO C	CENTER TO CENTER			HB	HOSE BIB	OPNG	OPENING	REV	REVISION	VTR	VENT THROUGH ROOF
CAB	CABINET	EJ	EXPANSION JOINT	HDW	HARDWARE	OPP	OPPOSITE	RF	RESILIENT FLOORING	VWC	VINYL WALL COVERING
CEM	CEMENT	EL	ELEVATION	HM	HOLLOW METAL	OPT	OPTIONAL	RL	ROOF LEADER	W	WASTE, WATT, WEST, WIDE
CER	CERAMIC	ELEC	ELECTRIC	HORIZ	HORIZONTAL	PCT	PERCENT	RM	ROOM	W/	WITH
CI	CAST IRON	EPDM	ETHLENE PROPYLENE DIENE MONOMER	HT	HEIGHT	PEJ	PREMOLDED EXPANSION JOINT	RND	ROUND	W/O	WITHOUT
CIP	CAST IRON PIPE			HVY	HEAVY	PL	PROPERTY LINE	RO	ROUGH OPENING	WC	WATER CLOSET, WALL COVERING
CJ	CONTROL JOINT,CONSTRUCTION JOINT	EQ	EQUAL	ID	INSIDE DIAMETER	PLAS	PLASTER, PLASTIC	RS	ROUGH SAWN	WD	WOOD
CLG	CEILING	EQUIP	EQUIPMENT	INSUL	INSULATION, INSULATED	PLYWD	PLYWOOD	RT	RIGHT	WH	WATER HEATER
CLG REG	CEILING REGISTER	EW	EACH WAY	INT	INTERIOR	PNL	PANEL	S	SOUTH	WP	WATERPROOFING, WEATHERPROOF, WORKING POINT
CLR	CLEAR	EWC	ELECTRIC WATER COOLER	J–BOX	JUNCTION BOX	PRELIM	PRELIMINARY	SAPC	SUSPENDED ACOUSTICAL PANEL CEILING		
CMU	CONCRETE MASORY UNIT	EXH	EXHAUST	JAN CL	JANITOR CLOSET	PSF	POUNDS PER SQUARE FOOT	SCHED	SCHEDULE	WSCT	WAINSCOT
CND	CONDUIT	EXIST	EXISTING	LAV	LAVATORY	PSI	POUNDS PER SQUARE INCH	SECT	SECTION	WT	WEIGHT
CNDS	CONDENSATE	EXP	ESPANSION, EXPOSED, EXPAND	LB	POUND	PT	PAINT	SF	SQUARE FOOT	WWF	WELDED WIRE FABRIC
CNTR	COUNTER	EXT	EXTERIOR	LT	LIGHT			SH	SHINGLES, SINGLE HUNG	XFMR	TRANSFORMER
CO	CLEANOUT	FD	FLOOR DRAIN	MACH	MACHINE			SIM	SIMILAR		
COL	COLUMN	FDTN	FOUNDATION	MATL	MATERIAL			SPEC	SPECIFICATION		
CONC	CONCRETE	FF	FINISH FACE	MAX	MAXIMUM			SPF	SPRAY POLYURETHANE FOAM		
CONN	CONNECT	FEC	FIRE EXTINGUISHER CABINET	MECH	MECHANICAL			SQ	SQUARE		

APPR | DATE | DESCRIPTION | SYM

NAVFAC

SEAL

A/E INFO

APPROVED
FOR RALPH DEAL 3/25/15
FOR COMMANDER NAVFAC

ACTIVITY

SATISFACTORY TO DATE 3-25-15

DES: RMR | DRW: RMR | CHK: SWC

<<PM/DM>> R. M. RUSSELL

BRANCH MANAGER

ENGR DIRECTOR Ralph D. Deal

CUSTOMER

DEPARTMENT OF THE NAVY
NAVAL FACILITIES ENGINEERING COMMAND
PWD PORTSMOUTH
NAVAL FACILITIES ENGINEERING COMMAND ~ MID ATLANTIC
NORFOLK NAVAL SHIPYARD – PORTSMOUTH, VIRGINIA
NORFOLK NAVAL SHIPYARD
PORTSMOUTH, VIRGINIA

B260 EXTENSIVE REPAIRS

ARHITECTURAL SYMBOLS, LEGENDS, ABBREVIATIONS & NOTES

SCALE: AS NOTED
EPROJECT NO.: 1146716
CONSTR. CONTR. NO.: N40085–15–R–0018
NAVFAC DRAWING NO.: 12681966
SHEET 32 OF 118

A-001

DRAWFORM REVISION: 10 MARCH 2009

FILE NAME: P:\VA\NNSY\Buildings\V260\2011_1146716_Nuclear Materials Wise Repairs\B_Design\Drawings\BJD260–1146716–A–001.dwg LAYOUT NAME: A–001 PLOTTED: Monday, March 23, 2015 – 1:49pm USER: renee.russell

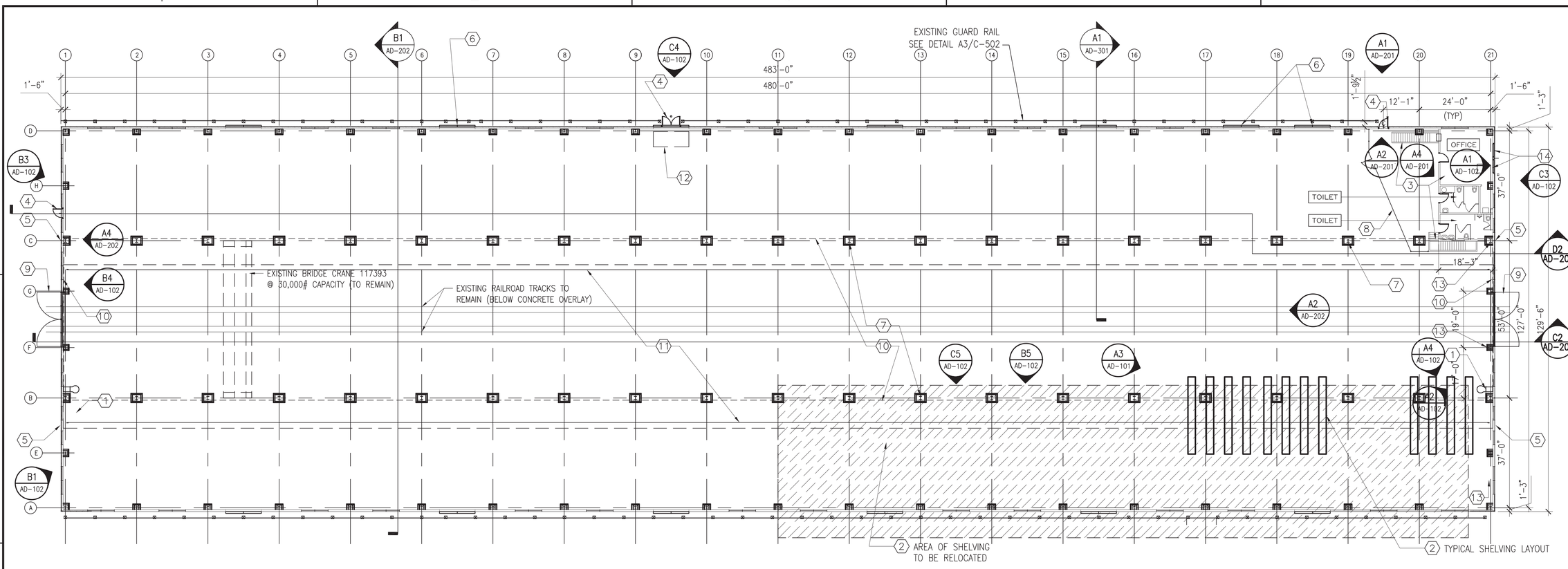

ARCHITECTURAL DEMOLITION PLAN

SCALE: NONE

PLAN NORTH

DEMO WORK NOTES

1. COMPLETELY REMOVE AND DIVERT FROM LANDFILL TWO (2) EXISTING STEEL LADDERS WITH CAGES TO EXISTING BRIDGE CRANE RAIL AT NORTH AND SOUTH ENDS OF HIGH BAY. APPROXIMATE HEIGHT FROM FINISHED FLOOR TO TOP OF LADDER IS 37 FEET. SCRAP AND SUPPORT STEEL TO EXISTING STRUCTURAL STEEL SHALL BE DIVERTED FROM DISPOSAL. SEE PHOTO A1/AD-202.

2. REMOVE 13'-6" HIGH HEAVY-DUTY SHELVING WHERE INDICATED AND DIVERT FROM LANDFILL (APPROXIMATELY 40 UNITS). SEE DETAIL A3/AD-101 FOR TYPICAL UNITS.

3. COMPLETELY REMOVE 2-STORY WOOD-FRAMED BUILDING-IN-BUILDING (BIB). THE FIRST FLOOR INCLUDES OFFICES AND TOILET ROOMS. THE SECOND FLOOR CONTAINS LOCKER ROOMS. DEMOLITION SHALL INCLUDE TWO SETS OF WOODEN STAIRS TO SECOND DECK; PLUMBING FIXTURES, AND MECHANICAL EQUIPMENT; LIGHTING FIXTURES AND ELECTRICAL EQUIPMENT; AND INTERIOR FINISHES DOWN TO EXISTING CONCRETE FLOOR AND TO EXISTING STRUCTURAL FRAMING IN EXTERIOR WALL. DIVERT FROM LANDFILL ALL WOOD FRAMING, SIDING, DOORS, WIRE MESH, AND MISCELLANEOUS WOOD; ALL TOILET ROOM PLUMBING FIXTURES; THROUGH-WALL AIR CONDITIONERS; AND MISCELLANEOUS METAL.

4. REMOVE AND DIVERT FROM LANDFILL EXISTING EXTERIOR PERSONNEL DOORS. DEMOLITION SHALL INCLUDE ALL HARDWARE AND ACCESSORIES. ACCESS CONTROL DEVICES SHALL BE CAREFULLY REMOVED, SALVAGED, AND TURNED OVER TO THE CONTRACTING OFFICER'S REPRESENTATIVE. AREAS WHERE DOOR FRAMING REMAINS SHALL BE PREPARED FOR RECEPTION OF MAKE-UP FRAMING AND A HIGH PERFORMANCE COATING SYSTEM. SEE DETAIL A1/A-301 FOR AND STRUCTURAL FOR FRAMING DETAILS.

5. WHERE INDICATED COMPLETELY REMOVE AND DISPOSE OF EXISTING TEST VALVES THROUGH NORTH AND SOUTH WALLS AT COLUMN LINES "B" AND "C."

DEMO WORK NOTES - CONTINUED

6. WHERE INDICATED CAREFULLY REMOVE AND SALVAGE EXISTING METAL PANELS IN AREA TO RECEIVE NEW WINDOWS OR DOORS. SEE SHEET A-602 FOR DOOR SCHEDULE AND DETAILS.

7. PREPARE ALL SURFACES OF EXISTING EXPOSED STRUCTURAL STEEL IN HIGH BAY AREA TO RECEIVE HIGH PERFORMANCE COATING SYSTEM (APPROXIMATELY 31,375 SQUARE FEET).

8. CAREFULLY REMOVE AND SALVAGE APPROXIMATELY 50 FEET OF EXISTING 8' HIGH FENCING, ALONG COL. 19 AND C, INCLUDING FRAMING (POLES), GATE, AND WELDED WIRE MESH FABRIC. CLEAN OFF ADHERED CONCRETE AND STORE FOR REINSTALLATION.

9. EXISTING GATES TO REMAIN SHALL BE REMOVED AND PROTECTED DURING CONSTRUCTION.

10. REMOVE AND DIVERT FROM LANDFILL EXISTING CONTINUOUS CLERESTORY WINDOWS AROUND PERIMETER OF HIGH BAY. GLAZING IS CORRUGATED WIRE GLASS, SUPPORTED AT TOP AND BOTTOM ON THE INTERIOR BY BRACKETS THAT ARE ATTACHED TO EXTERIOR BATTENS TO EXISTING STRUCTURAL STEEL. EACH WINDOW IS APPROXIMATELY 6' HIGH AND SPACED 2'-2-1/4" ON CENTER. SEE PHOTOS A4, B4, AND C5/AD-102 FOR SEE ADDITIONAL DETAILS.

11. EXISTING LIFE LINE ABOVE CRANE RAIL ON EAST AND WEST SIDES OF HIGH BAY SHALL REMAIN.

12. REMOVE AND DISPOSE OF EXISTING TEMPORARY (HERCULITE) ENCLOSURE AT ELECTRICAL ROOM BETWEEN COLUMN LINES 9D & 10D.

13. REMOVE AND DIVERT FROM LANDFILL APPROXIMATELY 6 EXISTING OBSTRUCTIONS ON INTERIOR FACE OF EXISTING COLUMNS. SEE PHOTO A2/AD-102 FOR EXAMPLE OBSTRUCTION, AND GENERAL NOTE 9, SHEET G-002.

14. EXISTING WINDOWS SHALL BE REMOVED & SALVAGED FOR REINST.

15. RELOCATE LIGHT OVER DOOR 002. SEE DETAIL A1/AS-201.

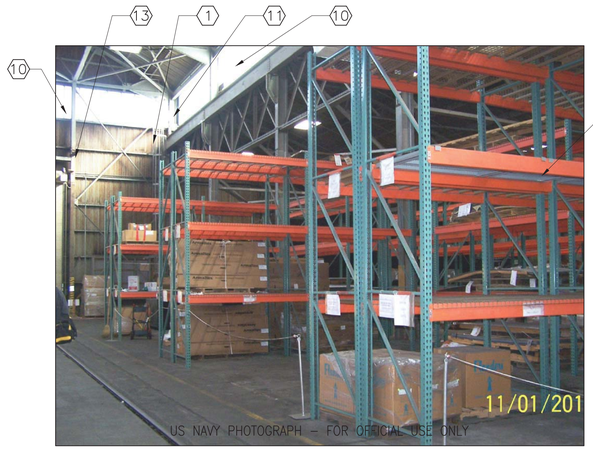

NOTE: OVERALL HEIGHT OF TYPICAL UNIT IS 13'-6"

PHOTO
TYPICAL SHELVING, MISC. NOTED ITEMS

SCALE: NONE

A3 AD-101

SEE SHEET AD-701 FOR REFERENCE DRAWING OF THIS BUILDING-IN-BUILDING

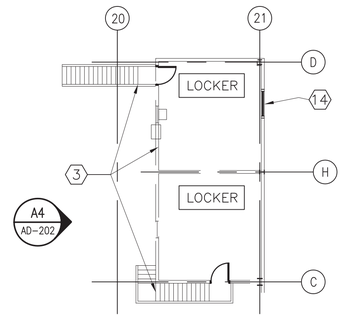

2ND FLR DEMOLITION PLAN

SCALE: NONE

LEGEND

A1 AD-202 PHOTOGRAPHIC REPRESENTATION – CARET INDICATES CAMERA DIRECTION

APPR | DATE | DESCRIPTION | SYM

NAVFAC

SEAL

A/E INFO

APPROVED
FOR RALPH DEAL 2/23/15
FOR COMMANDER NAVFAC

ACTIVITY
SATISFACTORY TO DATE 3-24-15

DES RMR DRW RMR CHK SWC
<CPM/EM/>: R. M. RUSSELL
BRANCH MANAGER
ENGR DIRECTOR Ralph D. Deal
CUSTOMER

DEPARTMENT OF THE NAVY
NAVAL FACILITIES ENGINEERING COMMAND
PWD PORTSMOUTH

NAVAL FACILITIES ENGINEERING COMMAND – MID ATLANTIC
NORFOLK NAVAL SHIPYARD – PORTSMOUTH, VIRGINIA

NORFOLK NAVAL SHIPYARD
PORTSMOUTH, VIRGINIA

B260 EXTENSIVE REPAIRS

ARCHITECTURAL DEMOLITION PLAN

SCALE: AS NOTED
EPROJECT NO.: 1146716
CONSTR. CONTR. NO.: N40085-15-R-0018
NAVFAC DRAWING NO.: 12681987
SHEET 33 OF 118

AD-101

DRAWFORM REVISION: 10 MARCH 2009

FILE NAME: P:\VA\VNSY\Buildings\0260\2011_1146716_Nuclear Materials Whse Repairs\B_Design\Drawings\BLDG260-1146716-AD-101.dwg LAYOUT NAME: AD-101 PLOTTED: Monday, March 16, 2015 - 12:30pm USER: renee.russell

ELEVATION - SOUTH END

SCALE: NONE

B1 AD-102

PHOTO WINDOWS TO REMAIN

SCALE: NONE

C3 AD-102

PHOTO EXIST. ELEC ROOM DOORS

SCALE: NONE

C4 AD-102

EXISTING DAMAGED STRUCTURAL STEEL

PHOTO CLER. WINDOWS TO DEMO

SCALE: NONE

C5 AD-102

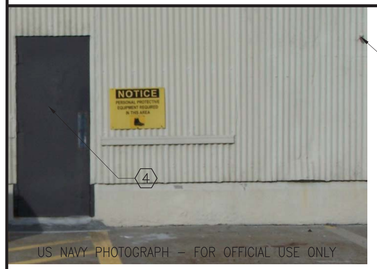

PHOTO (EXTERIOR) WALL PEN. TO DEMO

SCALE: NONE

B3 AD-102

PHOTO (INTERIOR) WALL PEN. TO DEMO

SCALE: NONE

B4 AD-102

EXISTING UNDAMAGED STRUCTURAL STEEL

PHOTO CLER. WINDOWS TO DEMO

SCALE: NONE

B5 AD-102

REMOVE EXISTING WINDOWS TO REMAIN, INCLUDING SECURITY SCREENS, IN PREPARATION FOR REINSTALLATION, AS REQUIRED TO ADJUST FOR NEW INTERIOR WALL FINISH

PHOTO SECURITY SCREEN

SCALE: NONE

A1 AD-102

EXISTING OBSTRUCTION OVER DOOR 001 AT NORTH END, TYPICAL

PHOTO OBSTRUCTION TO DEMO

SCALE: NONE

A2 AD-102

EXISTING BRIDGE CRANE TO REMAIN

EXISTING LIGHTING FIXTURE TO BE REMOVED SALVAGED AND REINSTALLED – SEE ELEC

PHOTO LIGHTS IN WAREHOUSE

SCALE: NONE

A3 AD-102

CRANE STOP– SEE GENERAL NOTE 12 ON SHEET G-002 FOR ADDITIONAL CRANE OPERA– TING ENVELOPE INFORMATION

PHOTO NE CORNER OF HIGH BAY

SCALE: NONE

A4 AD-102

PHOTO EXT OF CLER. WINDOWS

SCALE: NONE

A5 AD-102

APPR	DATE	DESCRIPTION	SYM

NAVFAC

SEAL

A/E INFO

APPROVED
FOR RALPH DEAL 2/23/15
FOR COMMANDER NAVFAC

ACTIVITY
SATISFACTORY TO DATE 3-25-15

DES: RMR	DRW: RMR	CHK: SWC
<<CPM/CMO>>: R. M. RUSSELL		
BRANCH MANAGER:		
ENGR DIRECTOR: Ralph D. Deal		
CUSTOMER:		

DEPARTMENT OF THE NAVY
NAVAL FACILITIES ENGINEERING COMMAND – MID ATLANTIC
PWD PORTSMOUTH
NORFOLK NAVAL SHIPYARD – PORTSMOUTH, VIRGINIA
NORFOLK NAVAL SHIPYARD
PORTSMOUTH, VIRGINIA

B260 EXTENSIVE REPAIRS

ARCHITECTURAL DEMOLITION DETAIL PHOTOGRAPHS

SCALE:	AS NOTED
EPROJECT NO.:	1146716
CONSTR. CONTR. NO.	N40085-15-R-0018
NAVFAC DRAWING NO.	12681988
SHEET	34 OF 118

AD-102

DRAWFORM REVISION: 10 MARCH 2009

FILE NAME: P:\VA\VNSY\Buildings\0260\2011_1146716_Nuclear Materials Wipe Repairs\B_Design\Drawings\BLDG260-1146716-AD-102.dwg LAYOUT NAME: AD-102 PLOTTED: Friday, March 20, 2015 – 7:46am USER: renee.russell

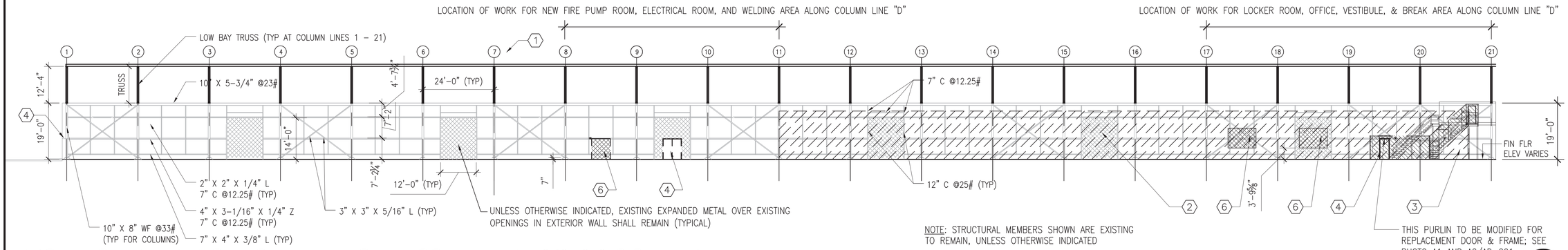

NOTE: STRUCTURAL MEMBERS SHOWN ARE EXISTING TO REMAIN, UNLESS OTHERWISE INDICATED

ARCHITECTURAL DEMOLITION ELEVATION AT COLUMN LINE "D" - "A" IS SIMILAR

SCALE: NONE

D2 / AD-210

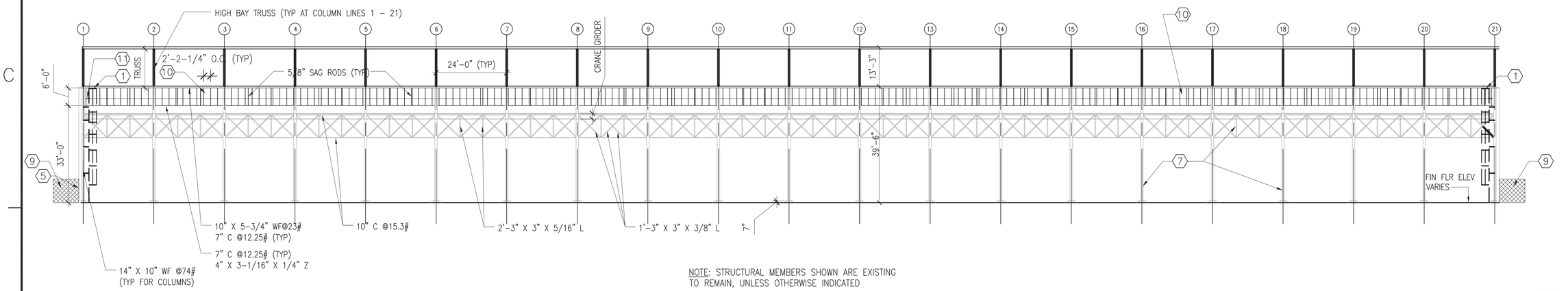

NOTE: STRUCTURAL MEMBERS SHOWN ARE EXISTING TO REMAIN, UNLESS OTHERWISE INDICATED

ARCHITECTURAL DEMOLITION ELEVATION AT COLUMN LINE "C" - "B" IS SIMILAR

SCALE: NONE

C2 / AD-210

NOTE: SEE SHEET AD-101 FOR DEMOLITION NOTES.

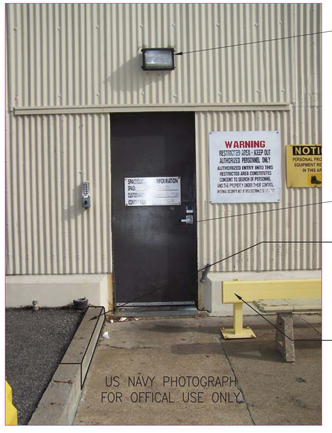

15
4
EXISTING CURB TO BE DEMOLISHED, SEE SHEET CD-101
EXISTING GUARD RAIL TO BE MODIFIED, SEE SHEET CD-101

PHOTO
MAIN ENTRY DOOR - EXT

SCALE: NONE

A1 / AD-201

THIS PURLIN SHALL BE MODIFIED TO ADJUST ELEVATION, SEE DETAIL A1/A-301 AND NEW WORK NOTE 6 ON SHEET S-103

4

PHOTO
MAIN ENTRY DOOR - INT

SCALE: NONE

A2 / AD-201

PREPARATION FOR APPLICATION OF SPRAY POLYURETHANE FOAM INSTALLATION – FASTENER CONNECTIONS SHALL BE RESECURED AND CLEANING OF AREA FOR WALL TREATMENT SHALL BE PERFORMED. SEE ALSO GENERAL NOTE 7 ON SHEET G-002.

PHOTO
PANEL CONNECTION (TYP)

SCALE: NONE

A3 / AD-201

3 EXISTING BUILDING-IN-BUILDING

8 EXISTING CHAIN-LINK FENCE

EXISTING STEAM PRESSURE REDUCING STATION ON NORTH END, SEE SHEET M-502

PHOTO
BUILDING-IN-BUILDING

SCALE: NONE

A4 / AD-201

APPR	DATE	DESCRIPTION	SYM

NAVFAC

SEAL

A/E INFO

APPROVED
FOR RALPH DEAL 3/23/15
FOR COMMANDER NAVFAC

ACTIVITY

SATISFACTORY TO DATE 3-23-15

DES	RMR	DRW	CFSJ	CHK	SWC

<<PM/DM>> R. M. RUSSELL
BRANCH MANAGER
ENGR DIRECTOR Ralph D. Deal
CUSTOMER

DEPARTMENT OF THE NAVY
NAVAL FACILITIES ENGINEERING COMMAND
PWD PORTSMOUTH

NAVAL FACILITIES ENGINEERING COMMAND – MID ATLANTIC
NORFOLK NAVAL SHIPYARD – PORTSMOUTH, VIRGINIA

NORFOLK NAVAL SHIPYARD
PORTSMOUTH, VIRGINIA

B260 EXTENSIVE REPAIRS

ARCH DEMO – LONGITUDINAL SECT – INTER ELEVS & PHOTOS

SCALE:	AS NOTED
EPROJECT NO.:	1146716
CONSTR. CONTR. NO.	N40085-15-R-0018
NAVFAC DRAWING NO.	12681989
SHEET	35 OF 118

AD-201

DRAWFORM REVISION: 10 MARCH 2009

FILE NAME: P:\VA\VNSY\Buildings\0260\2011_1146716_Nuclear Materials Wrse Repairs\B_Design\Drawings\BLDG260-1146716-AD-201.dwg LAYOUT NAME: AD-201 PLOTTED: Monday, March 16, 2015 – 1:13pm USER: renee.russell

NOTE: SEE SHEET AD-101 FOR DEMOLITION NOTES.

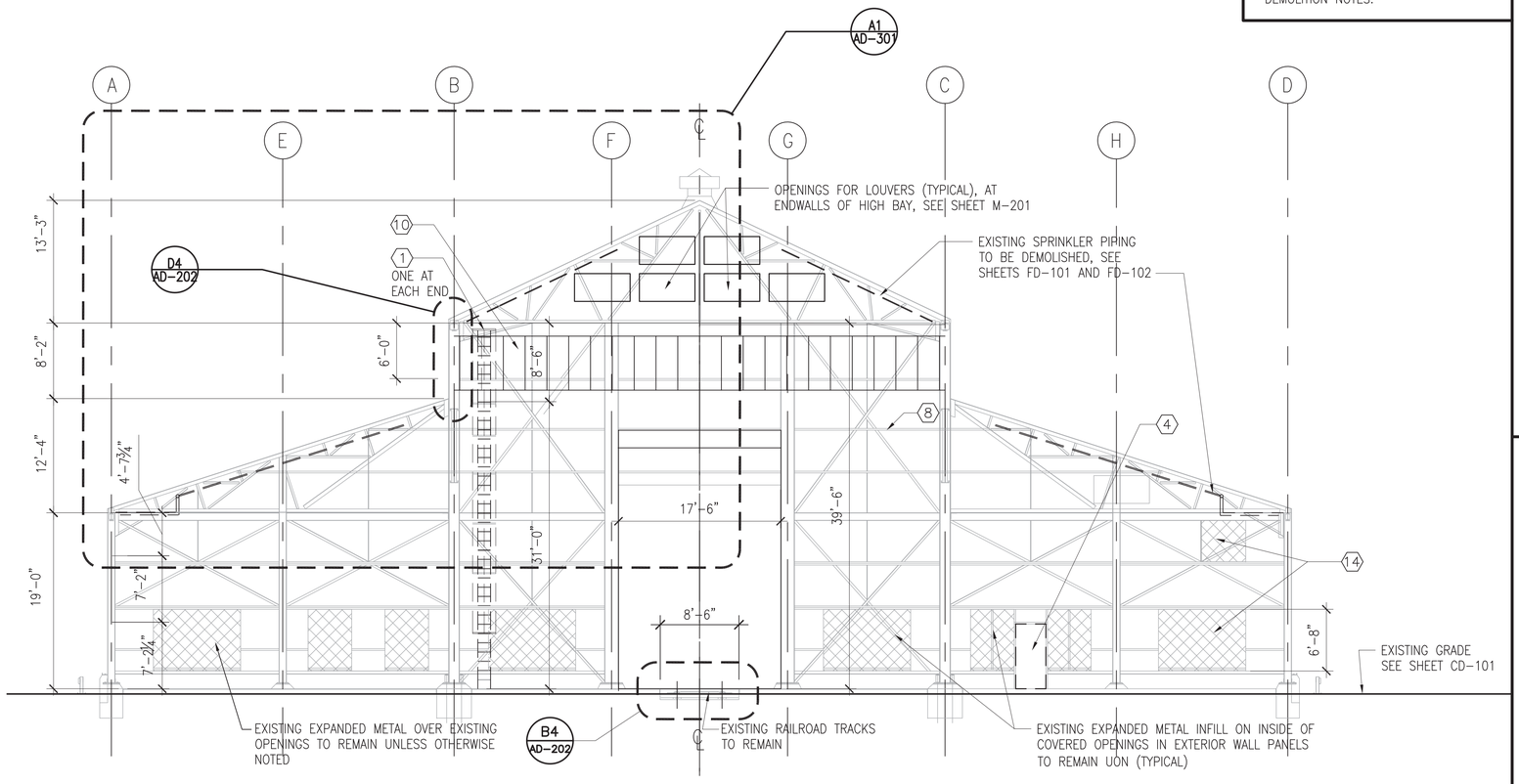

0 4' 8' 16'

SCALE: 1/8" = 1'-0"

ARCHITECTURAL INTERIOR DEMOLITION ELEVATION SOUTH END WALL - NORTH SIMILAR

SCALE: 1/8" = 1'-0"

NOTE: GATES AT HIGH BAY, SIDING AND ROOFING NOT SHOWN FOR CLARITY

B1 AD-202

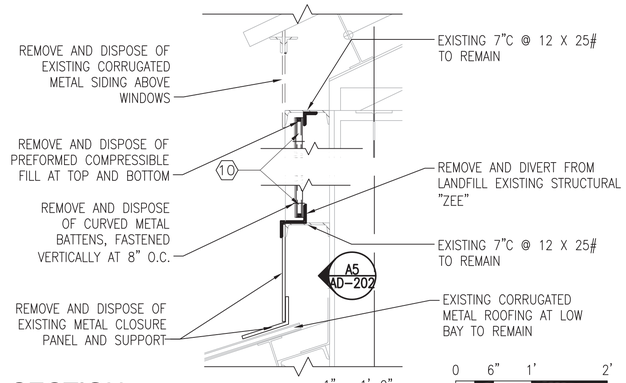

SECTION THROUGH CLERESTORY WINDOWS

SCALE: 1" = 1'-0"

D4 AD-202

1 1/2" = 1'-0" 0 4" 8" 1'-4"

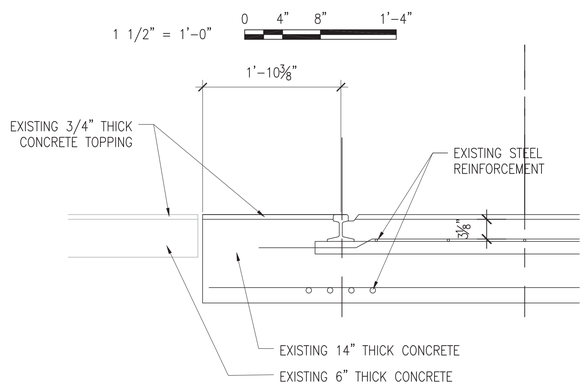

SECTION AT RAILROAD TRACKS

SCALE: 1-1/2" = 1'-0"

1 1/2" = 1'-0" 0 4" 8" 1'-4"

B4 AD-202

PHOTO LADDER TO CRANE RAIL

SCALE: NONE

A1 AD-202

PHOTO HIGH BAY INTERIOR

SCALE: NONE

A2 AD-202

PHOTO BUILDING-IN-BUILDING

SCALE: NONE

A3 AD-202

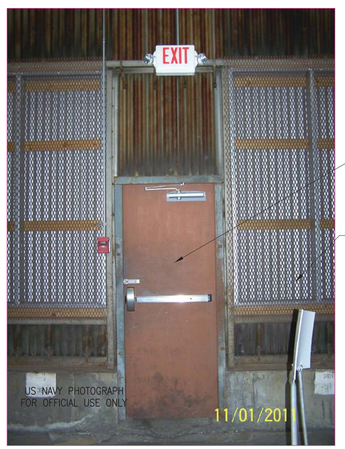

PHOTO END WALL PRSNL DOOR

SCALE: NONE

A4 AD-202

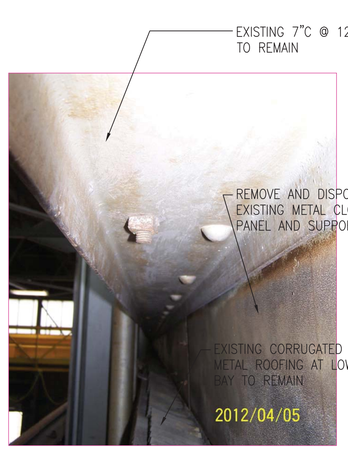

PHOTO CLOSURE AT WINDOWS

SCALE: NONE

A5 AD-202

APPR | DATE | DESCRIPTION | SYM

NAVFAC

SEAL

A/E INFO

APPROVED
FOR RALPH DEAL 2/23/15
FOR COMMANDER NAVFAC

ACTIVITY

SATISFACTORY TO DATE 3-25-15

DES	RMR	DRW	RMR	CHK	SWC

<<PM/DM>> R. M. RUSSELL
BRANCH MANAGER
ENGR DIRECTOR Ralph D. Deal
CUSTOMER

DEPARTMENT OF THE NAVY
NAVAL FACILITIES ENGINEERING COMMAND
PWD PORTSMOUTH
NAVAL FACILITIES ENGINEERING COMMAND ~ MID ATLANTIC
NORFOLK NAVAL SHIPYARD – PORTSMOUTH, VIRGINIA
NORFOLK NAVAL SHIPYARD
PORTSMOUTH, VIRGINIA

B260 EXTENSIVE REPAIRS

ARCHITECTURAL DEMOLITION CROSS SECTION AND PHOTOS

SCALE:	AS NOTED
EPROJECT NO.:	1146716
CONSTR. CONTR. NO.	N40085-15-R-0018
NAVFAC DRAWING NO.	12681990
SHEET	36 OF 118

AD-202

DRAWFORM REVISION: 10 MARCH 2009

FILE NAME: P:\VA\NNSY\Buildings\0260\2011_1146716_Nuclear Materials Wtse Repairs\B_Design\Drawings\BJ0260-1146716-AD-202.dwg LAYOUT NAME: AD-202 PLOTTED: Monday, March 16, 2015 - 1:27pm USER: renee.russell

ARCHITECTURAL DEMOLITION ELEVATION AT BIB

SCALE: NONE

C1
AD–301

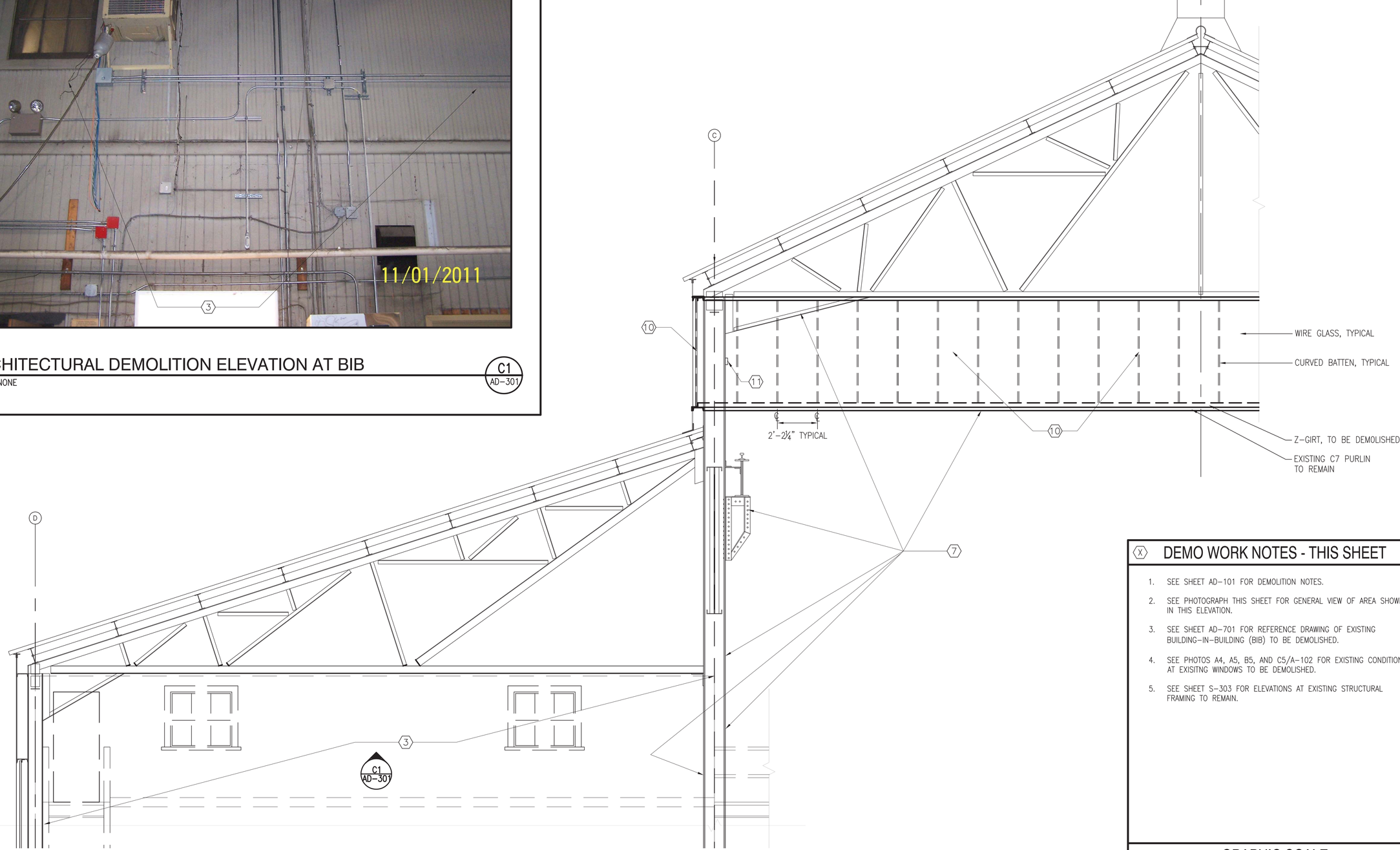

ARCHITECTURAL DEMOLITION SECTION - CROSS SECTION - LOOKING NORTH

SCALE: 3/8" = 1'–0"

A1
AD–301

⟨X⟩ DEMO WORK NOTES - THIS SHEET

1. SEE SHEET AD–101 FOR DEMOLITION NOTES.
2. SEE PHOTOGRAPH THIS SHEET FOR GENERAL VIEW OF AREA SHOWN IN THIS ELEVATION.
3. SEE SHEET AD–701 FOR REFERENCE DRAWING OF EXISTING BUILDING–IN–BUILDING (BIB) TO BE DEMOLISHED.
4. SEE PHOTOS A4, A5, B5, AND C5/A–102 FOR EXISTING CONDITIONS AT EXISITNG WINDOWS TO BE DEMOLISHED.
5. SEE SHEET S–303 FOR ELEVATIONS AT EXISTING STRUCTURAL FRAMING TO REMAIN.

GRAPHIC SCALE

3/8" = 1'–0"

0 1'–4" 2'–8" 5'–4"

SYM	DESCRIPTION	DATE	APPR

NAVFAC

SEAL

A/E INFO

APPROVED
FOR RALPH DEAL 3/23/15
FOR COMMANDER NAVFAC

ACTIVITY
SATISFACTORY TO DATE 3-24-15

DES: RMR | DRW: CFSJ | CHK: SWC

<<PM/DM>> R. M. RUSSELL

BRANCH MANAGER

ENGR DIRECTOR Ralph D. Deal

CUSTOMER

DEPARTMENT OF THE NAVY
NAVAL FACILITIES ENGINEERING COMMAND – MID ATLANTIC
PWD PORTSMOUTH
NAVAL FACILITIES ENGINEERING COMMAND
NORFOLK NAVAL SHIPYARD – PORTSMOUTH, VIRGINIA
NORFOLK NAVAL SHIPYARD
PORTSMOUTH, VIRGINIA

B260 EXTENSIVE REPAIRS

ARCHITECTURAL DEMOLITION SECTION & PHOTOGRAPH

SCALE: AS NOTED
EPROJECT NO.: 1146716
CONSTR. CONTR. NO.: N40085–15–R–0018
NAVFAC DRAWING NO.: 12681991
SHEET 37 OF 118

AD-301

DRAWFORM REVISION: 10 MARCH 2009

FILE NAME: P:\VA\NNSY\Buildings\0260\2011_1146716_Nuclear Materials Wise Reports\B_Design\Drawings\BLDG260-1146716-AD-301.dwg LAYOUT NAME: AD-301 PLOTTED: Monday, March 16, 2015 - 1:33pm USER: renee.russell

FILE NAME: P:\VA\NNSY\Buildings\0260\2011_1146716_Nuclear Materials Whse Repairs\B_Design\Drawings\BLDG260-1146716-AD-701.dwg LAYOUT NAME: AD-701 PLOTTED: Monday, March 16, 2015 - 1:37pm USER: renee.russell

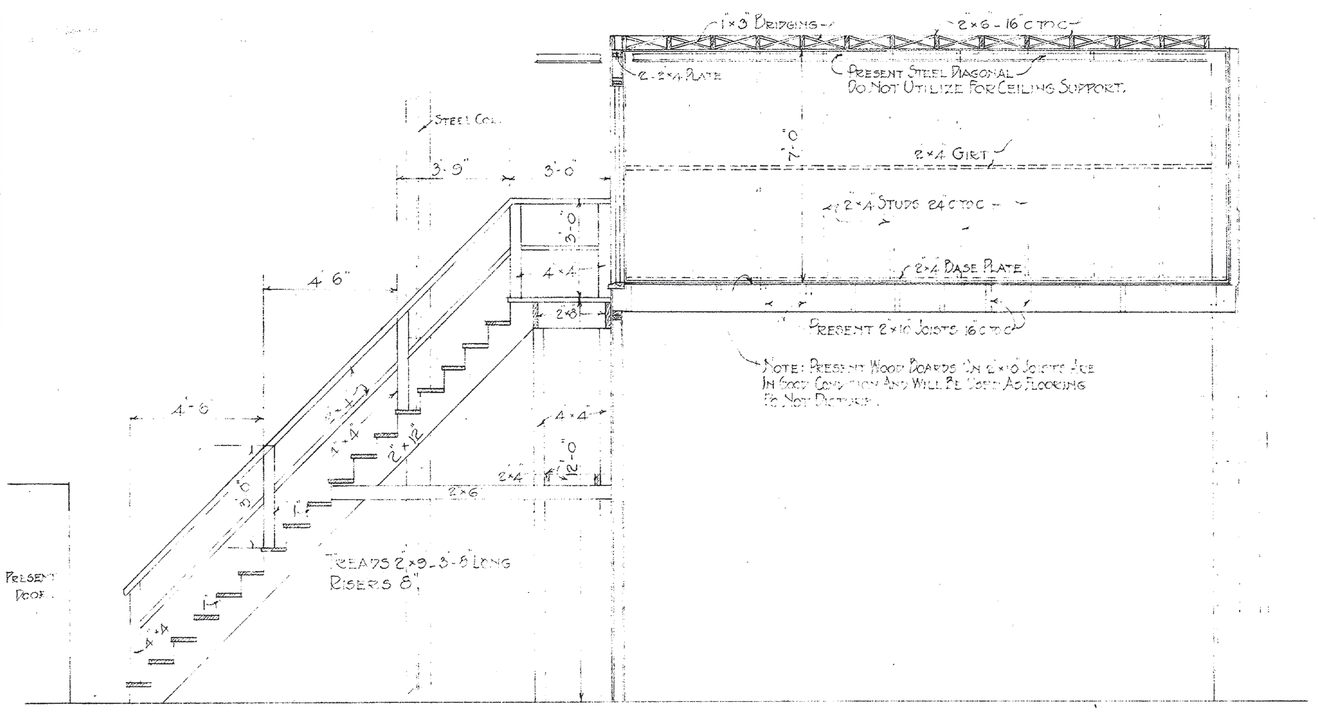

Section A.B.

Scale 3/8 = 1'-0

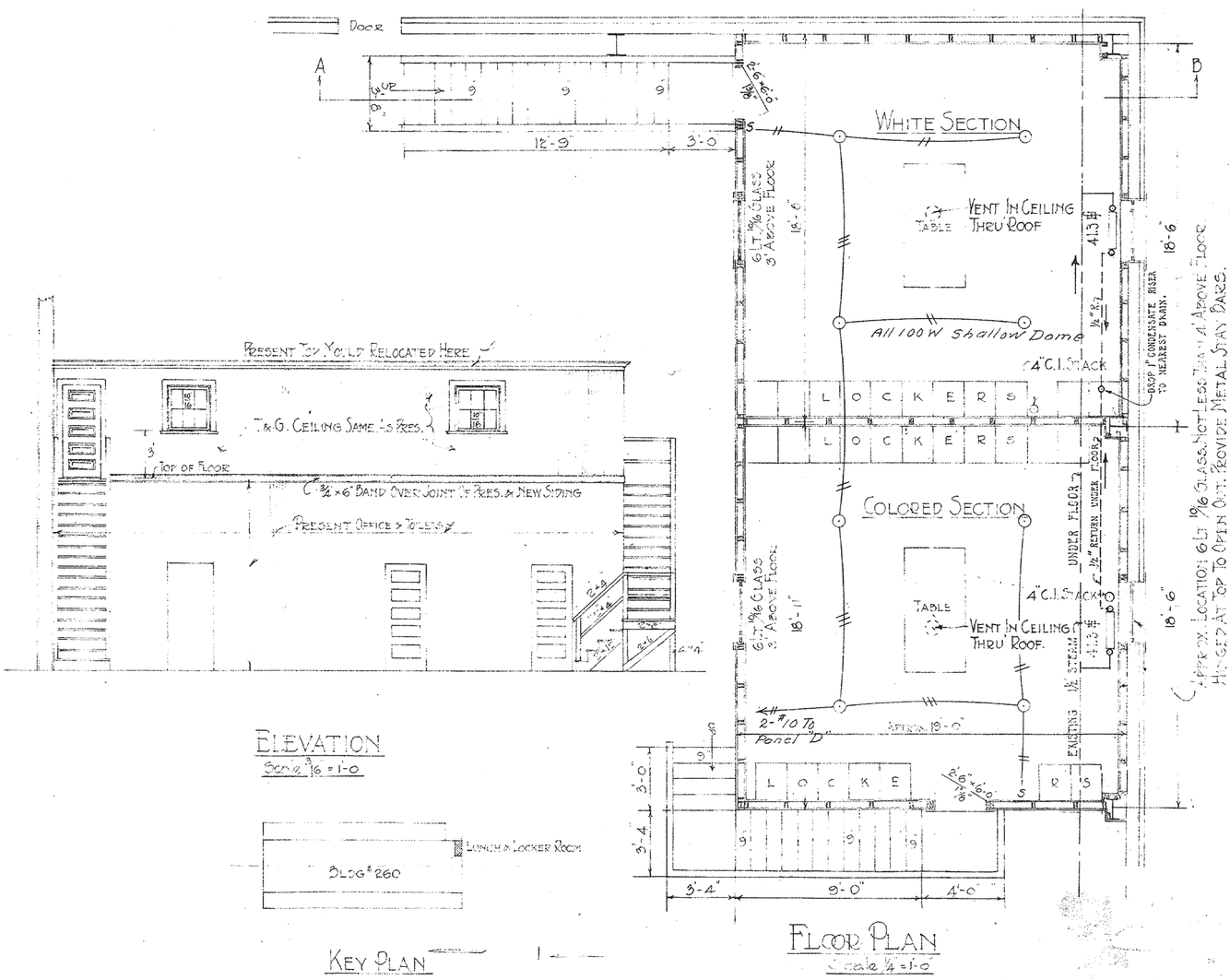

Elevation

Scale 3/16 = 1'-0

Key Plan

Floor Plan

Scale 1/4 = 1'-0

~Notes~

Provide 2. 2.6-8.0 x 1 3/8". 5 X Panel Doors And Frames. Hung On 3 Pin Butt Hinges. Mortise Locks With Knobs And Keys.
Interior Walls And Ceiling To Be Covered With 3/8 Ply Board.
All Angles To Floor, Walls And Ceiling To Have 1-1/4" Mould.
Provide 6 Lt. 1/8 Glass Sash As Shown With Frames. To Be Hinged At Top. To Open Out. Provide Metal Stay Bars.
Trim Doors And Windows In And Out With 1/2 x 4 1/2 Trim.
Paint New Exterior Siding, Band, Doors, Windows And Trims With Two Coats Of Paint In Color To Conform To Present Paint.
Paint Interior Sections With 2 Coats Light Grey.

J.O. Nº 2127-20H1901-0113

Revision	Date	Brief	By
	6-5-42	Stairs Up To Colored Section Changed. Windows To North Wall Changed From 3 Lt 10 x 14 To 6 Lt 10 x 16	

Drawn by A. J. Williamson
Traced by
Checked by R. M. N.S.
Chief Dftsm. L. S. Hayes
In Charge Thos. Jeffers

Y. & D. Drawing No.

NORFOLK NAVY YARD, PORTSMOUTH, VA.

STOREHOUSE BUILDING NO 260

LUNCH & LOCKER ROOM FOR WHITE & COLORED OVER OFFICE & TOILETS, N.W. CORNER

DEPARTMENT OF THE NAVY — NAVAL FACILITIES ENGINEERING COMMAND
NAVAL FACILITIES ENGINEERING COMMAND ~ MID ATLANTIC
PWD PORTSMOUTH — NORFOLK NAVAL SHIPYARD ~ PORTSMOUTH, VIRGINIA
NORFOLK NAVAL SHIPYARD — PORTSMOUTH, VIRGINIA

B260 EXTENSIVE REPAIRS

REFERENCE DRAWING – LUNCH & LOCKER ROOM OVER TOILETS

DRAWING NO.	AD-701
SHEET	38 OF 118
CONTRACT NO.	N40085-15-R-0018
WORK REQUEST NO.	12681992
DESIGN ACTIVITY	SWC
DESIGN CONTRACT NO.	1146716

CUSTOMER: Ralph D. Deal
DESIGN MANAGER: R. M. RUSSELL — RMR — SWC
APPROVED: 3-13-15
ENGINEER-IN-CHARGE: 3/16/15
CHECKED:
DRAWN:
TRACED:

NAVFAC

SYM	DESCRIPTION	DATE	APPR

DRAWING REVISION: 13 MARCH 2009

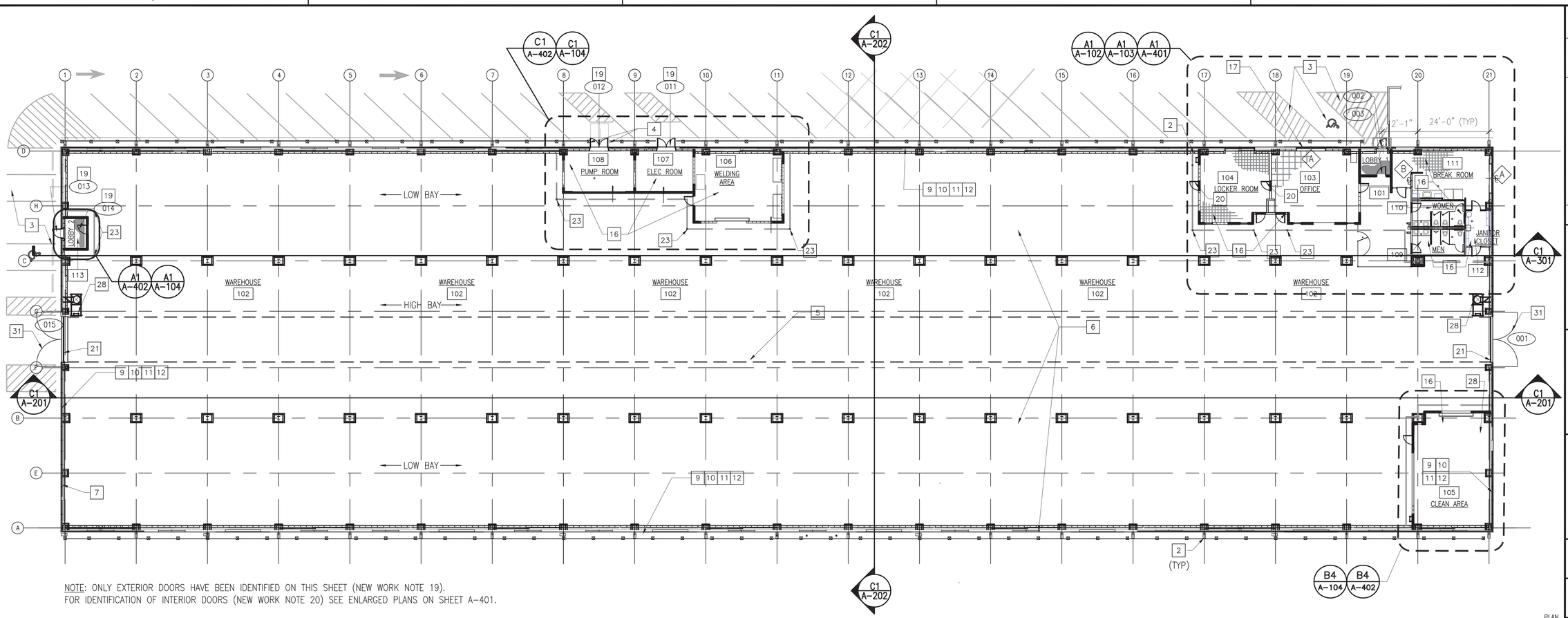

NOTE: ONLY EXTERIOR DOORS HAVE BEEN IDENTIFIED ON THIS SHEET (NEW WORK NOTE 19).
FOR IDENTIFICATION OF INTERIOR DOORS (NEW WORK NOTE 20) SEE ENLARGED PLANS ON SHEET A-401.

ARCHITECTURAL NEW WORK PLAN

SCALE: NONE

PLAN NORTH

NEW WORK KEYNOTES

1. SITE WORK: SEE SHEET C-101 FOR GRADING AT OVERHEAD DOORS 001 AND 015.

2. SITE WORK: FOR ALL EXISTING DOWNSPOUTS (APPROXIMATELY 22) PROVIDE ELBOW FITTING AT LOWER END FOR DIRECTING DISCHARGE TO CONCRETE SPLASH BLOCKS (ALSO TO BE PROVIDED). MATERIAL SHALL MATCH EXISTING (COPPER). PRIOR TO PLACEMENT OF SPLASH BLOCKS ASSURE THAT PAVEMENT AT GRADE IS FREE OF DEBRIS. WHERE REQUIRED TO ASSURE STABILITY OF SPLASH BLOCKS FILL VOIDS WITH MATERIALS TO MATCH ADJACENT. PROVIDE SAMPLE SPLASH BLOCK INSTALLATION FOR REVIEW BY DESIGNER OF RECORD AND CONTRACTING OFFICER'S REPRESENTATIVE PRIOR TO PLACEMENT OF REMAINING SPLASH BLOCKS.

3. SITE WORK: PHYSICAL ACCESSIBILITY AND ACCESS – WHERE INDICATED PROVIDE HANDICAPPED ACCESSIBLE PARKING SPACES, AISLE, AND LEVEL ACCESS TO EACH MAIN PERSONNEL DOOR (2). PROVIDE SIGN COMPLIANT WITH ARCHITECTURAL BARRIERS ACT ACCESSIBILITY STANDARDS (ABAAS). SEE SHEET C-101 FOR DETAILS.

4. SITE WORK: REWORK EXISTING 22" HIGH GUARD RAIL AND SUPPORTS TO PERMIT ACCESS TO FIRE PUMP ROOM, AND AT EXISTING ELECTRICAL ROOM). PATCH AND PAINT EXPOSED ENDS OF RAIL TO MATCH EXISTING. WHERE INDICATED PROVIDE SLOPED PAVING FOR LEVEL ACCESS TO FIRE PUMP ROOM, ELECTRICAL ROOM, AND WELDING AREA. WHERE INDICATED PROVIDE PIPE BOLLARDS TO MATCH EXISTING.

5. FLOOR REPAIR PREPARATION: RAILROAD TRACKS – ASSURE COMPLETE REMOVAL OF ALL LOOSE DEBRIS AND ANY MATERIAL DELETERIOUS TO BOND OF NEW CONCRETE FLOOR OVERLAY. PRIOR TO PLACEMENT OF CONCRETE FLOOR OVERLAY PER NOTE 6 BELOW THE CONTRACTOR SHALL NOTIFY THE DESIGNER OF RECORD AND THE CONTRACTING OFFICER'S REPRESENTATIVE TO ASSURE SUFFICIENCY OF PREPARATION. SEE DETAIL B4/AD-202 FOR FLOOR SECTION.

6. FLOOR REPAIRS: PROVIDE 4" CONCRETE OVERLAY PER STRUCTURAL DETAILS ON SHEETS S-301 AND S-302.

7. EXTERIOR WALLS: PREPARE ALL INTERIOR METAL PANEL WALLS AS DIRECTED IN SPECIFICATIONS SECTION 07 57 13 – SPRAYED POLYURETHANE FOAM (SPF).

8. EXTERIOR WALLS: AFTER PREPARATION OF EXISTING EXTERIOR WALLS FOR SPF PROVIDE COLD-FORMED METAL FRAMING IN ACCORDANCE WITH PLAN AND DETAIL A4/A-302. STUDS SHALL BE ALIGNED 1-1/2" INSIDE THE INTERIOR FACE OF EXISTING STRUCTURAL STEEL COLUMNS UON. FINISH WAREHOUSE SIDE OF WALLS WITH 3/4" THICK GYPSUM WALLBOARD THAT IS MOISTURE, FIRE, AND IMPACT RESISTANT. FINISH IN ACCORDANCE WITH MANUFACTURERS WRITTEN INSTRUCTIONS TO PROVIDE A THERMAL BARRIER FOR SPF IN ACCORDANCE WITH 2009 INTERNATIONAL BUILDING CODE §2603.4.

9. EXTERIOR WALLS: PROVIDE TWO PASSES OF APPROXIMATELY 1-1/2" THICKNESS OF SPF TO INSIDE OF PREPARED WALLS IN ACCORDANCE WITH MANUFACTURER'S WRITTEN INSTRUCTIONS.

10. INTERIOR COMPOSITE WALLS: PROVIDE FACTORY GLAZED CONCRETE MASONRY UNITS AT BASE OF WALL AND FINISH WITH GYPSUM WALLBOARD (GWB) ON 6" STUDS. GLAZED CMU SHALL HAVE COVE BASES. ALL EXTERNAL CORNERS SHALL BE BULL NOSE SHAPE. SEE WALLS SECTION B, DETAIL A2/A-302

11. INTERIOR WALLS: CONCRETE BASES – ASSURE COMPLETE REMOVAL OF ALL LOOSE DEBRIS AND ANY MATERIAL DELETERIOUS TO BOND OF NEW CONCRETE FLOOR OVERLAY. PROVIDE SUFFICIENT REMOVAL OF EXISTING PERIMETER JOINTS TO PERMIT INSERTION OF ISOLATION JOINT MATERIAL.

12. UNDERSIDE OF ROOFS: PREPARE ALL INTERIOR METAL PANEL ROOFS AS DIRECTED IN SPECIFICATIONS SECTION 07 57 13 – SPRAYED POLYURETHANE FOAM (SPF).

13. UNDERSIDE OF ROOFS: AFTER PREPARATION OF EXISTING ROOF SURFACE PROVIDE TWO PASSES OF APPROXIMATELY 1-1/2" THICKNESS OF SPF IN ACCORDANCE WITH MANUFACTURER'S WRITTEN INSTRUCTIONS.

14. CEILINGS: PROVIDE CEMENT/WOOD FIBER PLANKS, 1" THICK WITH BEVELED EDGES IN HIGH BAY. SECURE TO UNDERSIDE OF STEEL DECK. CARE SHALL BE TAKEN TO ISOLATE HEAT-PRODUCING DEVICES WITH PROTECTION MEETING THERMAL AND FLAMMABILITY TESTS UL1598 and IEC60598-1.

15. COORDINATION: FOR ADDITIONAL INFORMATION AND REQUIREMENTS SEE RESPECTIVE DRAWINGS AND SPECIFICATIONS FOR CIVIL, STRUCTURAL, FIRE PROTECTION, PLUMBING, MECHANICAL, AND ELECTRICAL.

16. INTERIOR CONSTRUCTION: PROVIDE INTERIOR CONSTRUCTION OF TOILET ROOMS, OFFICE, LOCKER ROOM, JANITOR CLOSET, ELECTRICAL ROOM, FIRE PUMP ROOM, AND SUPPORT AREAS (CLEAN AREA, BREAK AREA, AND WELDING AREA).

17. WINDOWS: WHERE INDICATED IN OFFICE AND LOCKER ROOM PROVIDE WINDOWS TO MATCH EXISTING LOWER WINDOWS TO REMAIN FROM DEMOLISHED OFFICE), INCLUDING FLASHING, AIR BARRIER, AND ACCESSORIES. ADJUST AS REQUIRED FOR NEW WALLS.

18. CLERESTORY WINDOWS: PROVIDE FIXED ALUMINUM-FRAMED, INSULATING GLASS WINDOWS IN HIGH BAY. SEE STRUCUTRAL AND ARCHITECTURAL DETAILS.

19. DOORS AND FRAMES: PROVIDE INSULATED EXTERIOR PERSONNEL DOORS & FRAMES PER SCHEDULE ON SHEET A-602. FINISH PER FINISH SCHEDULE ON SHEET A-601.

20. DOORS AND FRAMES: PROVIDE INTERIOR DOORS AND FRAMES IN ACCORDANCE WITH DOOR & FRAME SCHEDULE ON SHEET A-602 AND FINISH PER FINISH SCHEDULE ON SHEET A-601.

21. OVERHEAD DOORS: RESET EXISTING OVERHEAD DOOR COIL AS REQUIRED TO ACCOMMODATE CONCRETE OVERLAY AND FINISH ON INTERIOR SIDE OF EXTERIOR WALL.

22. PAINT STRIPING: PROVIDE PAINT STRIPES ALONG CENTER AISLE OF HIGH BAY WHERE INDICATED. SEE SPECIFICATION SECTION 09 90 00.

23. PIPE BOLLARDS: PROVIDE PIPE BOLLARDS WHERE INDICATED AND IN ACCORDANCE WITH GUARD POST DETAIL C-501.

24. INTERIOR SIGNAGE: WHERE INDICATED ON SHEET A-201 PROVIDE 6" HIGH RED STRIPE FOR ENTIRE LENGTH OF EXTERIOR WALLS AT COLUMN LINES A AND D TO INIDICATE VERTICAL LIMIT FOR STORAGE DUE TO FIRE PROTECTION RESTRICTIONS. EACH BAY PROVIDE WRITTEN NOTICE PER DETAIL A3/A-301.

25. ROOM SIGNAGE: PROVIDE TOILET ROOM SIGNAGE COMPLYING WITH ADA PER DETAILS ON 502 AND IN ACCORDANCE WITH FINISH SCHEDULE ON SHEET A-601.

26. SUBSURFACE CONNECTIONS: SEE C-101

27. CONCRETE OVERLAY: PROVIDE POLISHED CONCRETE FOR FLOOR IN WAREHOUSE, FIRE PUMP ROOM, ELECTRICAL ROOM, WELDING AREA, AND CLEAN AREA.

28. LADDERS TO OVERHEAD: PROVIDE PERMANENT STEEL LADDERS AND ACCESS HATCHES WHERE INDICATED. FOR DETAILS SEE SHEET S-308.

29. HVAC: STEAM (HEAT) CONVECTORS SHALL BE RECESSED INTO WALL FINISH ON INSIDE OF EXTERIOR WALL. SEE STEAM CONVECTOR SCHEDULE ON SHEET M-602

30. COMPRESSED AIR: COMPRESSED AIR MANIFOLDS INDICATED ON SHEET M-103 AND M-104 SHALL BE MOUNTED ON THE LOW BAY SIDE OF HIGH BAY COLUMNS.

31. GATES: REINSTALL EXISTING GATES AT OVERHEAD DOORS.

32. PATCHING: PATCH EXTERIOR WALLS TO MATCH EXISTING FOR ALL NEW PENETRATIONS THROUGH EXTERIOR WALL AND WHERE PREVIOUS THROUGH-WALL PENETRATIONS HAVE BEEN REMOVED. ASSURE THAT ALL CUT EDGES ARE GROUND SMOOTH AND ARE TREATED WITH ANTI-CORROSIVE.

APPR | DATE | DESCRIPTION | SYM

NAVFAC

SEAL

A/E INFO

APPROVED
Ralph Deal 3/23/15
FOR COMMANDER NAVFAC

ACTIVITY
SATISFACTORY TO DATE 3-24-15
DES RMR | DRW RMR | CHK SWC
<<PM/DM>> R. M. RUSSELL
BRANCH MANAGER
ENGR DIRECTOR Ralph D. Deal
CUSTOMER

DEPARTMENT OF THE NAVY
NAVAL FACILITIES ENGINEERING COMMAND – MID ATLANTIC
PWD PORTSMOUTH
NAVAL FACILITIES ENGINEERING COMMAND
NORFOLK NAVAL SHIPYARD – PORTSMOUTH, VIRGINIA
NORFOLK NAVAL SHIPYARD
PORTSMOUTH, VIRGINIA

B2260 EXTENSIVE REPAIRS

ARCHITECTURAL NEW WORK PLAN

SCALE: AS NOTED
EPROJECT NO.: 1146716
CONSTR. CONTR. NO.: N40085-15-R-0018
NAVFAC DRAWING NO.: 12681993
SHEET 39 OF 118

A-101

DRAWFORM REVISION: 10 MARCH 2009

FILE NAME: P:\VA\NOS\Buildings\0260\2011_1146716_Nuclear Materials Wise Reports\B_Design\Drawings\BLDG260-1146716-A-101.dwg LAYOUT NAME: A-101 PLOTTED: Monday, March 23, 2015 – 2:02pm USER: renee.russell

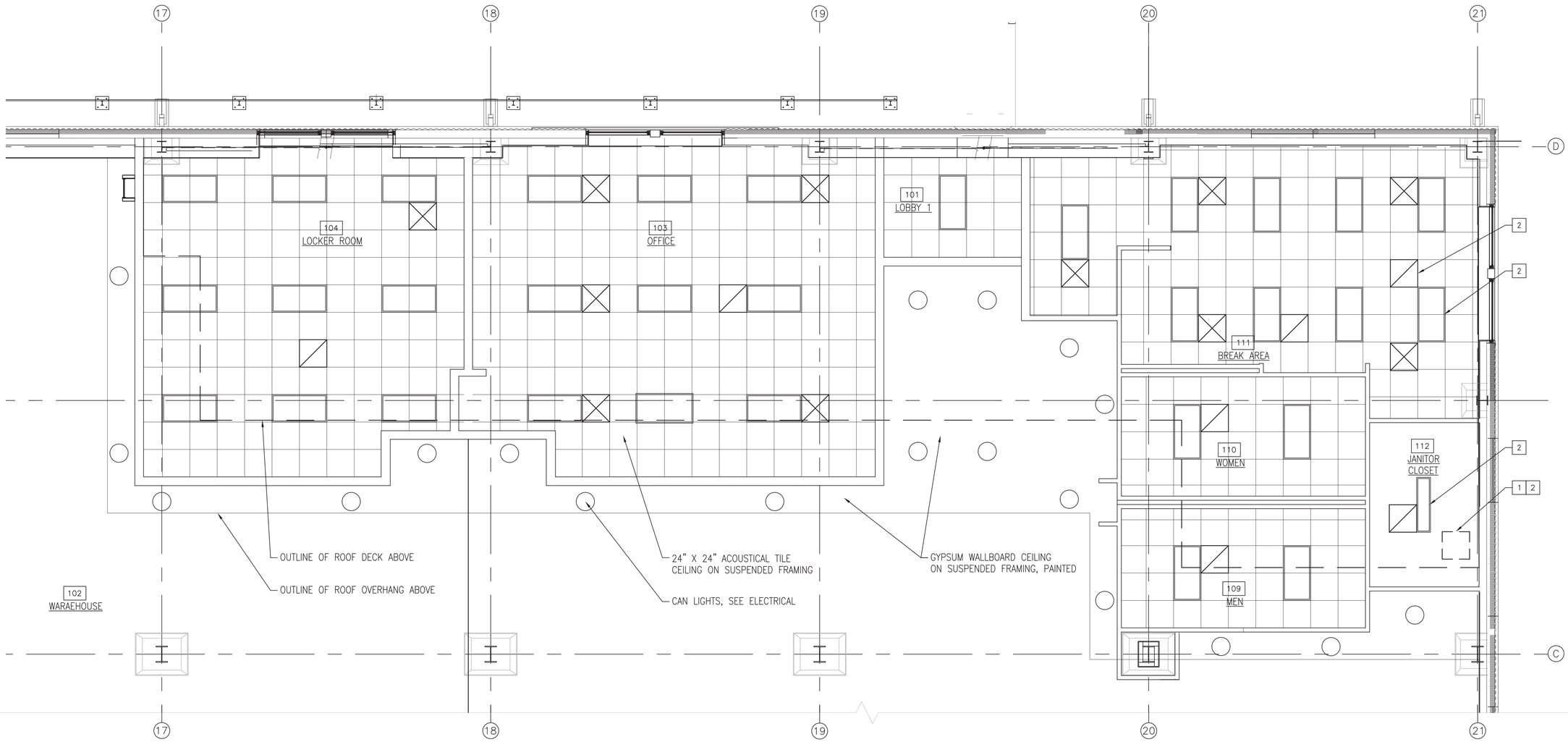

REFL CEILING PLAN AT LOBBY, OFFICE, LOCKER ROOM, BREAK AREA, AND REST ROOMS

SCALE: 1/4" = 1' – 0"

A1
A-102

GENERAL NOTES

1. NEW WORK NOTES ARE SHOWN ON SHEET A–101. SEE LEGEND FOR CEILING MOUNTED MECHANICAL EQUIPMENT AND LIGHTING FIXTURES. SEE MECHANICAL AND ELECTRICAL DRAWINGS FOR DETAILED INFORMATION.

2. THIS SHEET CONTAINS ENLARGED REFLECTED CEILING PLANS OF SELECT ACCESSORY AREAS OF THE WAREHOUSE. SEE SHEET A–601 FOR COMPLETE FINISH SCHEDULE.

3. CAN LIGHTS IN ROOF OVERHANG SIMILAR FOR PUMP ROOM, ELECTRICAL ROOM, CLEAN AREA, AND LOBBY 2. SURFACE MOUNTED FIXTURES IN THESE AREAS SHALL FOLLOW ELECTRICAL LAYOUT.

[X] NEW WORK NOTES

1. PROVIDE CEILING MOUNTED LIGHTING FIXTURES AND HVAC OPENINGS WHERE INDICATED (TYPICAL)

2. EXHAUST FAN ABOVE JANITOR CLOSET SHALL BE LOCATED WHERE REASONABLE TO CLEAR STRUCTURAL SUPPORT OF ROOF.

GRAPHIC SCALE

0 2' 4' 8'

SCALE: 1/4" = 1'–0"

LEGEND

MECHANICAL EQUIPMENT

- SUPPLY
- RETURN AND EXHAUST

LIGHTING FIXTURES

- 2' X 4' FIXTURE IN SUSP. ACST. CLG.
- SURFACE MOUNTED OR PENDANT FIXTURE
- RECESSED FIXTURE (CAN LIGHT)

APPR	DATE	DESCRIPTION	SYM

NAVFAC

SEAL

A/E INFO

APPROVED
FOR RALPH DEAL 3/23/15
FOR COMMANDER NAVFAC

ACTIVITY
SATISFACTORY TO DATE 3-25-15

DES: RMR | DRW: RMR | CHK: SWC
<CPM/DMK>: R. M. RUSSELL
BRANCH MANAGER
ENGR DIRECTOR: Ralph D. Deal
CUSTOMER

DEPARTMENT OF THE NAVY
NAVAL FACILITIES ENGINEERING COMMAND
PWD, PORTSMOUTH

NAVAL FACILITIES ENGINEERING COMMAND ~ MID ATLANTIC
NORFOLK, NAVAL SHIPYARD ~ PORTSMOUTH, VIRGINIA

NORFOLK NAVAL SHIPYARD
PORTSMOUTH, VIRGINIA

B260 EXTENSIVE REPAIRS

ARCHITECTURAL REFLECTED CEILING PLANS

SCALE: AS NOTED
EPROJECT NO.: 1146716
CONSTR. CONTR. NO.: N40085-15-R-0018
NAVFAC DRAWING NO.: 12681994
SHEET 40 OF 118

A-102

DRAWFORM REVISION: 10 MARCH 2009

FILE NAME: P:\VA\VNSY\Buildings\0260\2011_1146716_Nuclear Materials Whse Repairs\B_Design\Drawings\BLDG260-1146716-A-102.dwg LAYOUT NAME: A-102 PLOTTED: Monday, March 23, 2015 - 2:27pm USER: renee.russell

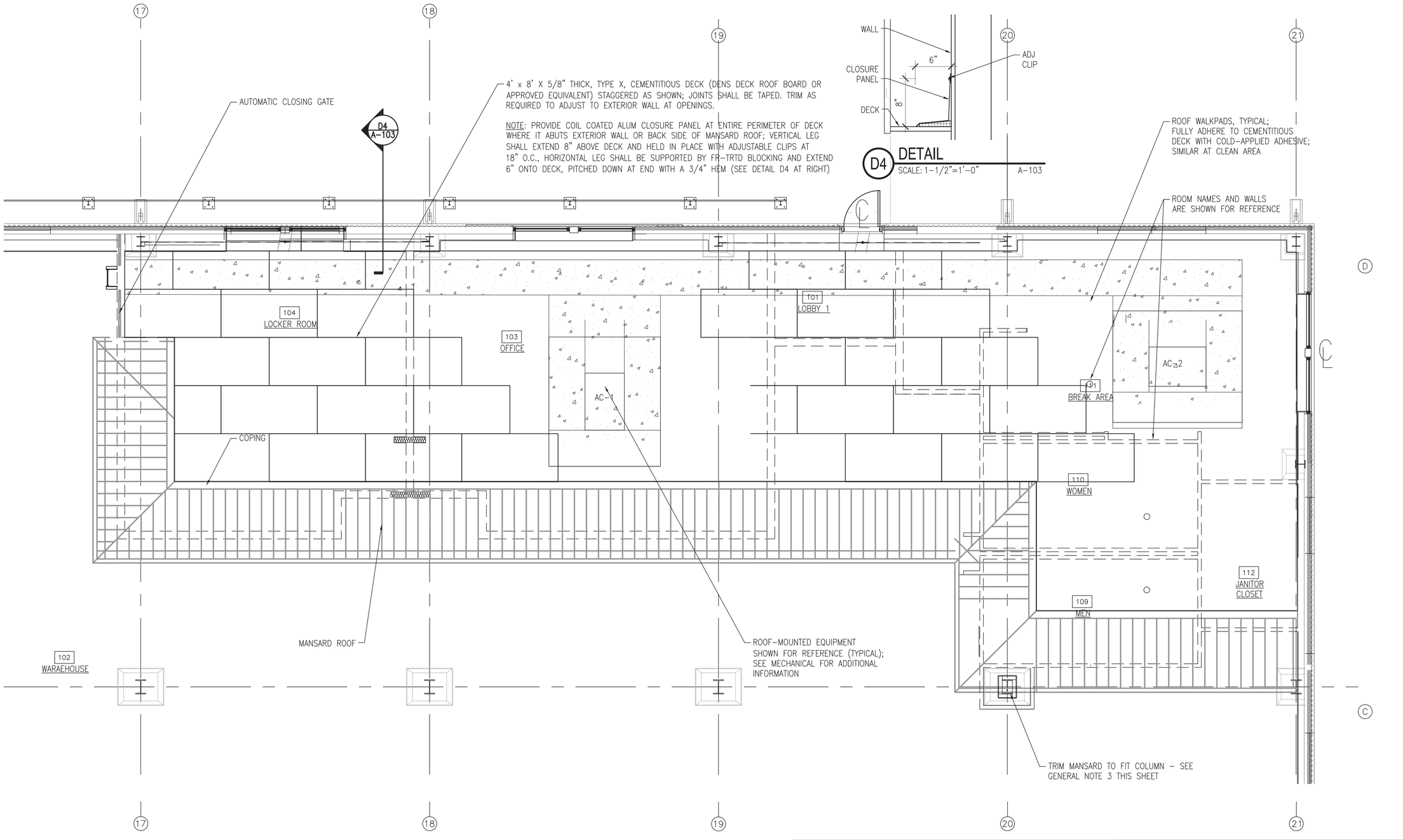

ROOF PLAN AT LOBBY, OFFICE, LOCKER ROOM, BREAK AREA, AND REST ROOMS

SCALE: 1/4" = 1' - 0"

A1
A-102

GENERAL NOTES - THIS SHEET

1. NEW WORK NOTES ARE SHOWN ON SHEET A-101.
2. THIS SHEET CONTAINS ENLARGED ROOF PLANS OF ACCESSORY AREAS OF THE WAREHOUSE. SEE SHEET A-104 FOR ADDITIONAL ENLARGED PLANS.
3. WHERE SHEET METAL IS TRIMMED TO FIT COLUMN; GRIND EDGES SMOOTH, TREAT CUT EDGES WITH ANTI-CORROSIVE, PROVIDE 3/4" HEMMED EDGE

GRAPHIC SCALE

1 1/2" = 1'-0" 0 4" 8" 1'-4"

1/4" = 1'-0" 0 2' 4' 8'

NAVFAC

DEPARTMENT OF THE NAVY
NAVAL FACILITIES ENGINEERING COMMAND ~ MID ATLANTIC
PWD PORTSMOUTH NORFOLK NAVAL SHIPYARD - PORTSMOUTH, VIRGINIA

NORFOLK NAVAL SHIPYARD PORTSMOUTH, VIRGINIA

B260 EXTENSIVE REPAIRS

ARCHITECTURAL BIB ROOF PLANS

SCALE: AS NOTED
EPROJECT NO.: 1146716
CONSTR. CONTR. NO. N40085-15-R-0018
NAVFAC DRAWING NO. 12681995
SHEET 41 OF 118

A-103

DRAWFORM REVISION: 10 MARCH 2009

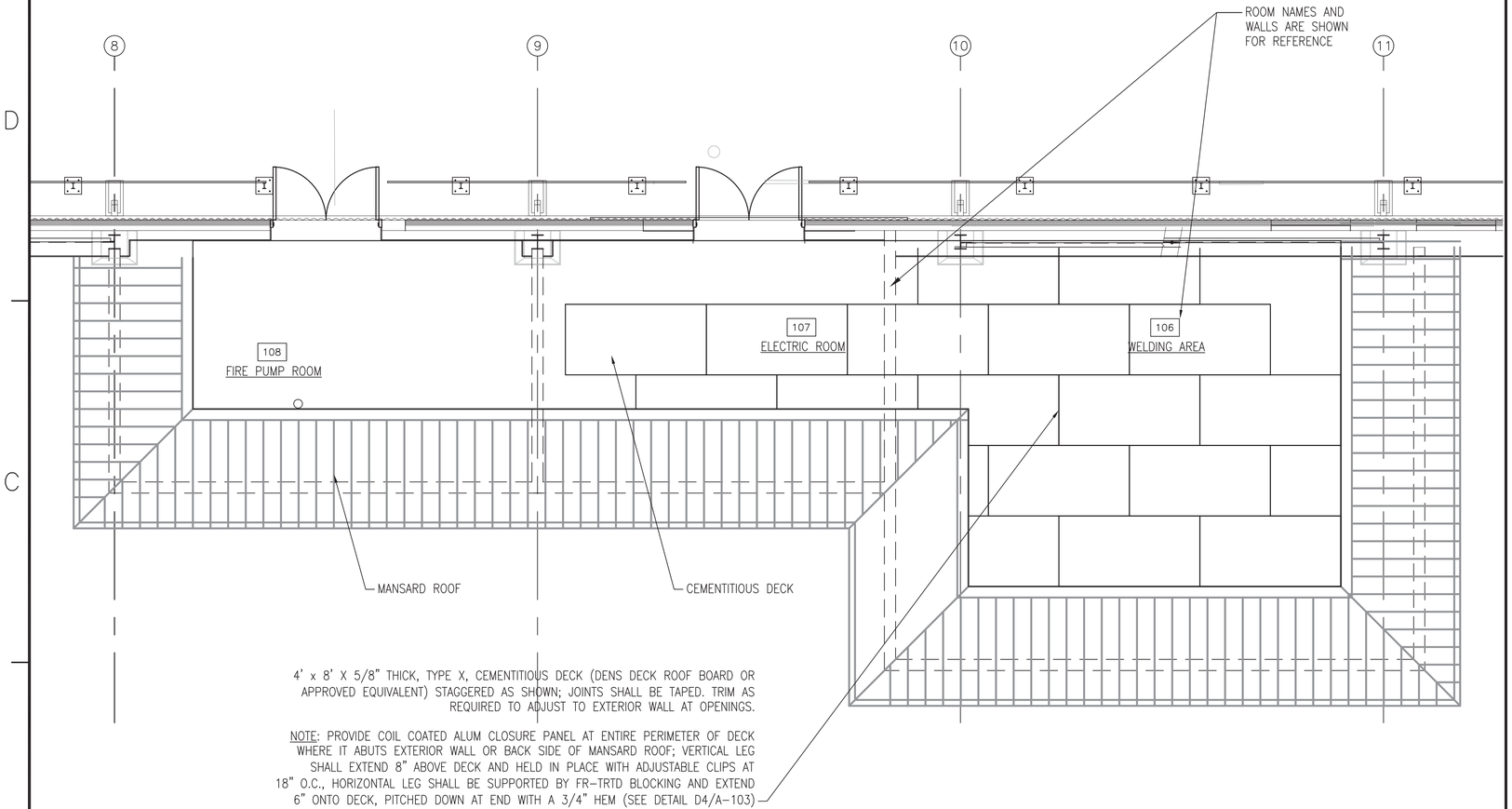

4' x 8' X 5/8" THICK, TYPE X, CEMENTITIOUS DECK (DENS DECK ROOF BOARD OR APPROVED EQUIVALENT) STAGGERED AS SHOWN; JOINTS SHALL BE TAPED. TRIM AS REQUIRED TO ADJUST TO EXTERIOR WALL AT OPENINGS.

NOTE: PROVIDE COIL COATED ALUM CLOSURE PANEL AT ENTIRE PERIMETER OF DECK WHERE IT ABUTS EXTERIOR WALL OR BACK SIDE OF MANSARD ROOF; VERTICAL LEG SHALL EXTEND 8" ABOVE DECK AND HELD IN PLACE WITH ADJUSTABLE CLIPS AT 18" O.C., HORIZONTAL LEG SHALL BE SUPPORTED BY FR-TRTD BLOCKING AND EXTEND 6" ONTO DECK, PITCHED DOWN AT END WITH A 3/4" HEM (SEE DETAIL D4/A-103)

ROOF PLAN AT PUMP ROOM, ELECTRICAL ROOM, AND WELDING AREA

SCALE: 1/4" = 1' - 0"

C1 / A-402

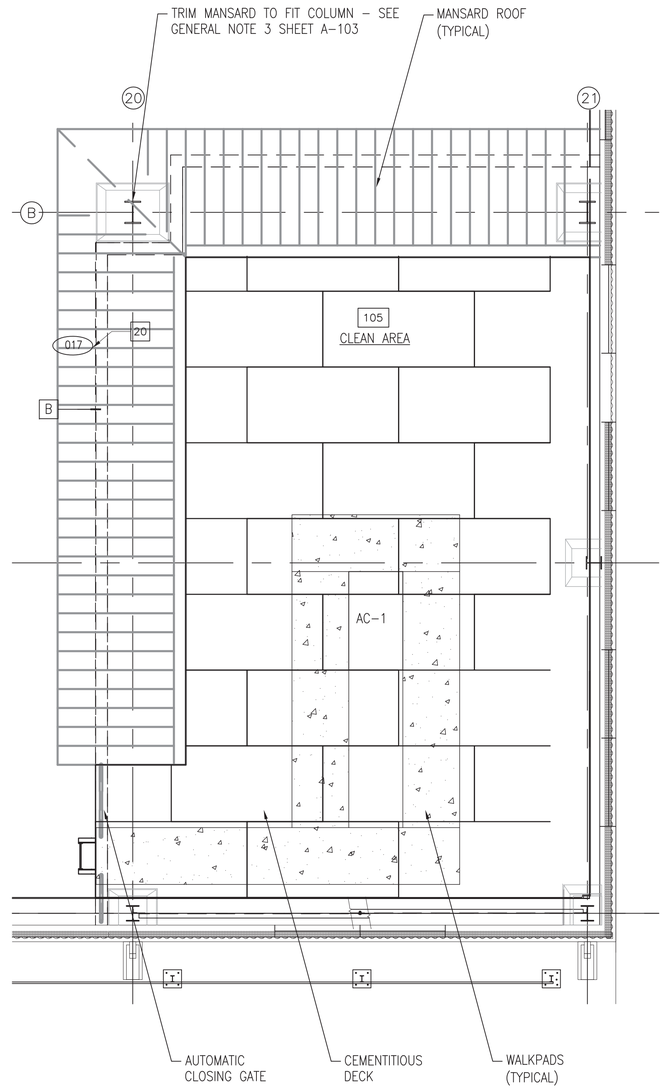

ROOF PLAN AT CLEAN AREA

SCALE: 1/4" = 1' - 0"

B4 / A-402

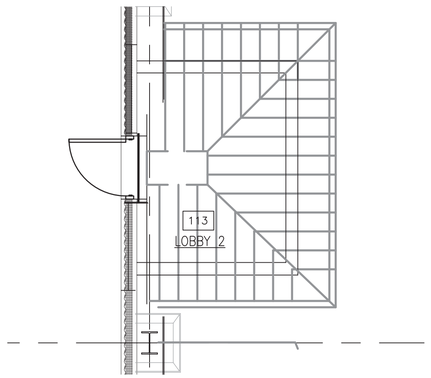

ROOF PLAN AT LOBBY 2

SCALE: 1/4" = 1' - 0"

A1 / A-402

GENERAL NOTES - THIS SHEET

1. NEW WORK NOTES ARE SHOWN ON SHEET A-101.

2. THIS SHEET CONTAINS ENLARGED ROOF PLANS OF ACCESSORY AREAS OF THE WAREHOUSE. SEE SHEET A-103 FOR ADDITIONAL ENLARGED PLANS AND NOTES.

GRAPHIC SCALE

0 2' 4' 8'

SCALE: 1/4" = 1'-0"

APPR | DATE | DESCRIPTION | SYM

NAVFAC

SEAL

A/E INFO

APPROVED
FOR RALPH DEAL 2/23/15
FOR COMMANDER NAVFAC

ACTIVITY
2-25-15
SATISFACTORY TO DATE

DES RMR DRW RMR CHK CAB
<CPM/DM>: R. M. RUSSELL
BRANCH MANAGER
ENGR DIRECTOR Ralph D. Deal
CUSTOMER

DEPARTMENT OF THE NAVY
NAVAL FACILITIES ENGINEERING COMMAND
PWD PORTSMOUTH

NAVAL FACILITIES ENGINEERING COMMAND ~ MID ATLANTIC
NORFOLK NAVAL SHIPYARD - PORTSMOUTH, VIRGINIA

NORFOLK NAVAL SHIPYARD PORTSMOUTH, VIRGINIA

B260 EXTENSIVE REPAIRS

ARCHITECTURAL LARGE SCALE PLANS

SCALE: AS NOTED
EPROJECT NO.: 1146716
CONSTR. CONTR. NO. N40085-15-R-0018
NAVFAC DRAWING NO. 12681996
SHEET 42 OF 118

A-104

DRAWFORM REVISION: 10 MARCH 2009

FILE NAME: P:\VA\VNSY\Buildings\0260\2011_1146716_Nuclear Materials Whse Repairs\B_Design\Drawings\BLDG260-1146716-A-104.dwg LAYOUT NAME: A-104 PLOTTED: Monday, March 16, 2015 - 1:59pm USER: renee.russell

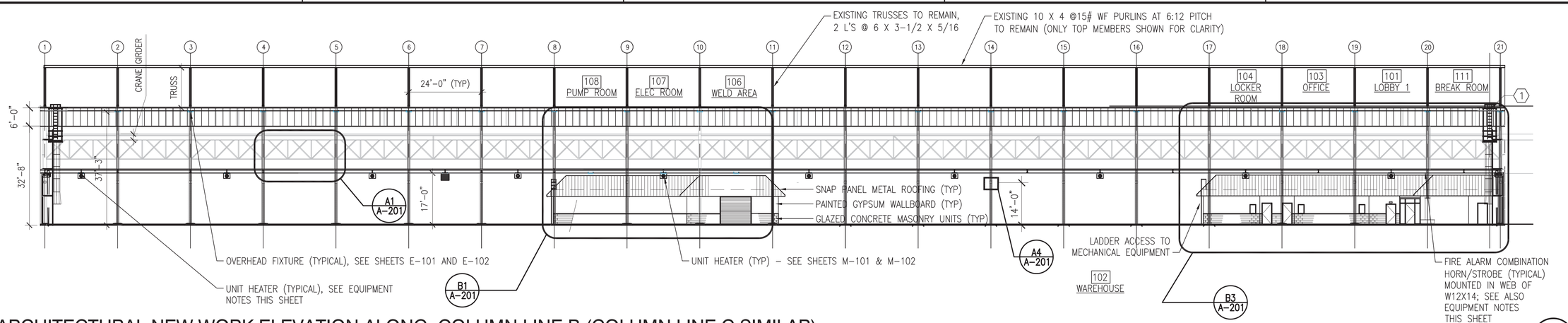

ARCHITECTURAL NEW WORK ELEVATION ALONG COLUMN LINE B (COLUMN LINE C SIMILAR)

SCALE: NONE

C1 A-201

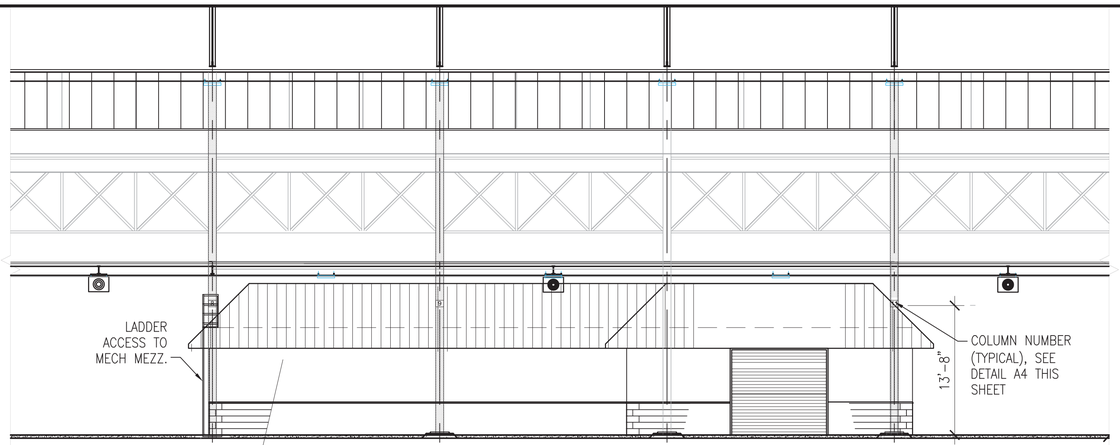

ARCHITECTURAL NEW WORK ELEVATION ROOMS

SCALE: 1/8" = 1' - 0"

B1 A-201

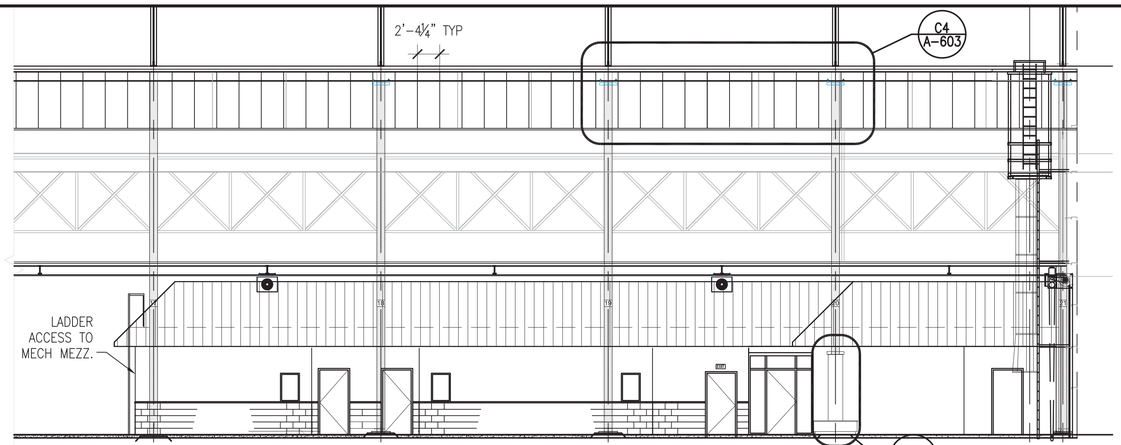

ARCHITECTURAL NEW WORK ELEVATION ROOMS

SCALE: 1/8" = 1' - 0"

B3 A-201

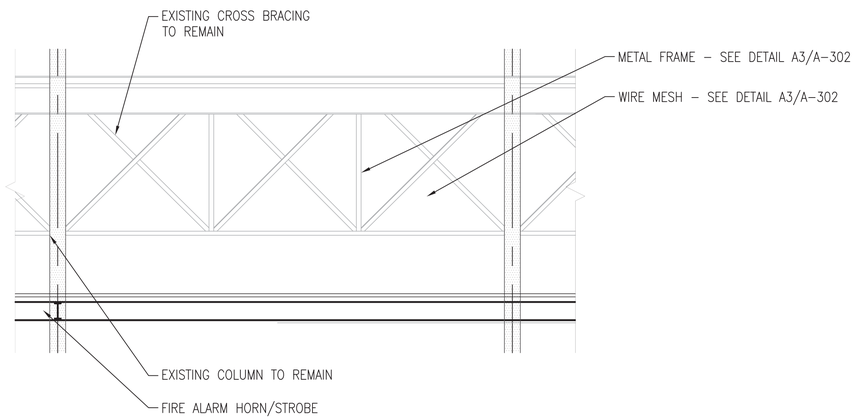

A1 METAL SCREENS

SCALE: 1/4" = 1' - 0"

A-201

COLUMN MOUNTED EQUIPMENT NOTES

MECHANICAL EQUIPMENT - SEE SHEETS M-101, AND M-102 FOR PLANS AND SHEET M-106 FOR EQUIPMENT SCHEDULES.

UNIT HEATER, TYPICAL FOR HIGH BAYS
TOP OF UNIT HTR MTG HT = 17'-0"

UNIT HEATER, TYPICAL FOR LOW BAYS
TOP OF UNIT HTR MTG HT = 15'-0"

FIRE ALARM NOTIFICATION SYSTEM - SEE SHEET FA-001 FOR DEVICE & APPLIANCE MOUNTING HEIGHTS NOT SHOWN.

FIRE ALARM HORN/STROBE COMBINATION

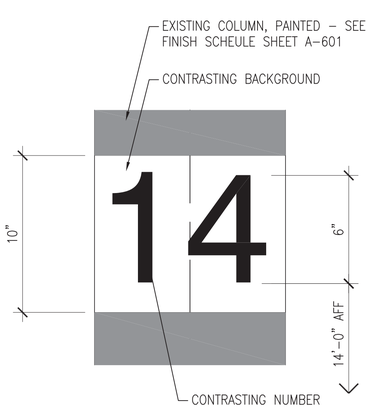

A4 COLUMN NUMBERS

SCALE: 3" = 1'-0"

A-201

(X) NEW WORK NOTES

1. SEE SHEET A-101 FOR NEW WORK NOTES

GRAPHIC SCALE

3" = 1'-0" 0 2" 4" 8"

1/8" = 1'-0" 0 4' 8' 16'

APPR | DATE | DESCRIPTION | SYM

NAVFAC

SEAL

A/E INFO

APPROVED
FOR RALPH DEAL 3/29/15
FOR COMMANDER NAVFAC

ACTIVITY

SATISFACTORY TO DATE 3-29-15

DES	RMR	DRW	RMR	CHK	CAB

<<PM/DM>> R. M. RUSSELL
BRANCH MANAGER
ENGR DIRECTOR Ralph D. Deal
CUSTOMER

DEPARTMENT OF THE NAVY
NAVAL FACILITIES ENGINEERING COMMAND
PWD PORTSMOUTH

NAVAL FACILITIES ENGINEERING COMMAND ~ MID ATLANTIC
NORFOLK NAVAL SHIPYARD - PORTSMOUTH, VIRGINIA

NORFOLK NAVAL SHIPYARD
PORTSMOUTH, VIRGINIA

B260 EXTENSIVE REPAIRS

ARCHITECTURAL NEW WORK ELEVS - LONGITUDINAL, HIGH BAY

SCALE: AS NOTED
EPROJECT NO.: 1146716
CONSTR. CONTR. NO. N40085-15-R-0018
NAVFAC DRAWING NO. 12681997
SHEET 43 OF 118

A-201

DRAWFORM REVISION: 10 MARCH 2009

FILE NAME: P:\VA\NNSY\Buildings\0260\2011_1146716_Nuclear Materials Whse Repairs\B_Design\Drawings\B0260-1146716-A-201.dwg LAYOUT NAME: A-201 PLOTTED: Monday, March 16, 2015 - 2:17pm USER: renee.russell

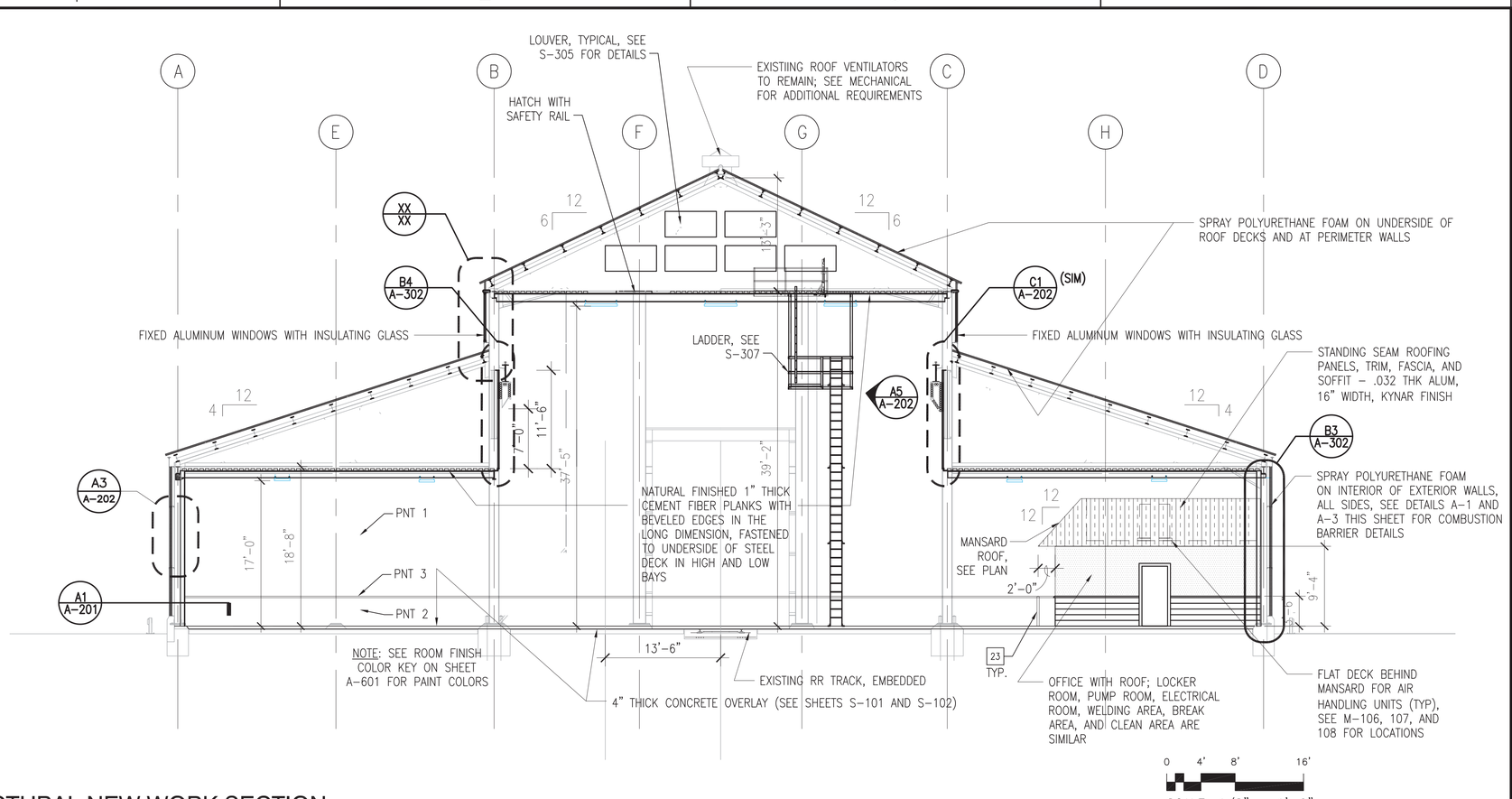

0 4' 8' 16'

SCALE: 1/8" = 1'-0"

ARCHITECTURAL NEW WORK SECTION SOUTH END WALL - NORTH SIMILAR

SCALE: 1/8" = 1'-0"

B1 A-202

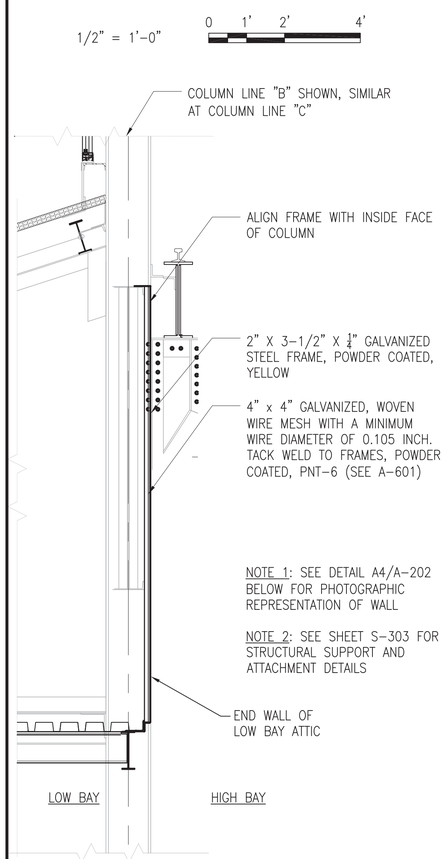

ELEVATION END WALL OF LOW BAY

SCALE: 1/2" = 1'-0"

B4 A-202

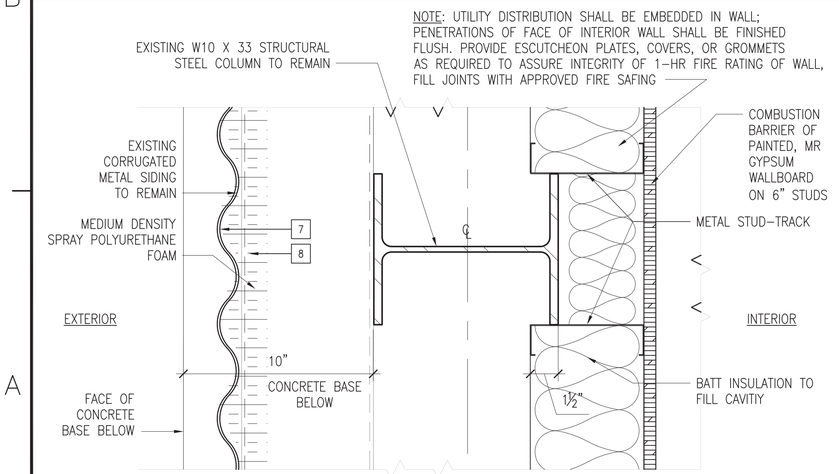

PLAN AT EXTERIOR WALLS

SCALE: NONE

A1 A-202

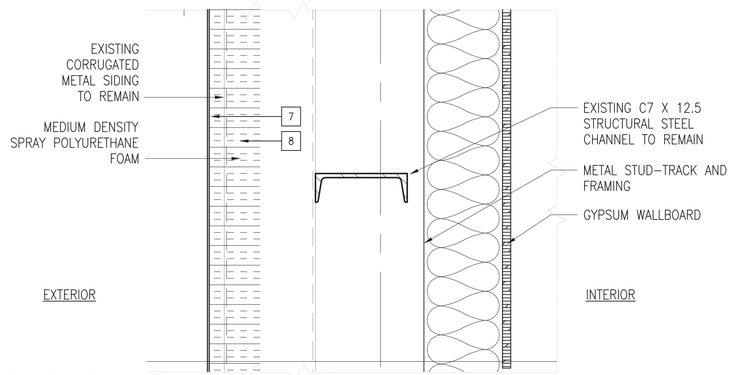

SECTION AT EXTERIOR WALLS

SCALE: NONE

A3 A-202

END WALL OF LOW BAY, PROTECTED BY GALVANIZED STEEL WOVEN FABRIC IN GALVANIZED STEEL FRAMES IN EACH BAY AS SHOWN ON EAST SIDE, WEST SIDE SIMILAR; SEE DETAIL B4 ABOVE

PHOTO - LOW BAY END WALLS, TYP

SCALE: NONE

A4 A-202

APPR	DATE	SYM	DESCRIPTION

NAVFAC

SEAL

A/E INFO

APPROVED
FOR RALPH DEAL 3/23/15
FOR COMMANDER NAVFAC

ACTIVITY
SATISFACTORY TO DATE 3-24-15

DES	RMR	DRW	CFSJ	CHK	CAB

<<PM/DM>> R. M. RUSSELL
BRANCH MANAGER
ENGR DIRECTOR Ralph D. Deal
CUSTOMER

DEPARTMENT OF THE NAVY
NAVAL FACILITIES ENGINEERING COMMAND – MID ATLANTIC
PWD PORTSMOUTH

NAVAL FACILITIES ENGINEERING COMMAND
NORFOLK NAVAL SHIPYARD – PORTSMOUTH, VIRGINIA
NORFOLK NAVAL SHIPYARD
PORTSMOUTH, VIRGINIA

B260 EXTENSIVE REPAIRS

ARCHITECTURAL NEW WORK ELEVS – CROSS SECT, WALL DETS

SCALE:	AS NOTED
EPROJECT NO.:	1146716
CONSTR. CONTR. NO.	N40085-15-R-0018
NAVFAC DRAWING NO.	12681998
SHEET	44 OF 118

A-202

DRAWFORM REVISION: 10 MARCH 2009

FILE NAME: P:\VA\NOS\Buildings\0260\2011_1146716_Nuclear Materials Wise Repairs\B_Design\Drawings\BLDG260-1146716-A-202.dwg LAYOUT NAME: A-202 PLOTTED: Monday, March 16, 2015 – 2:22pm USER: renee.russell

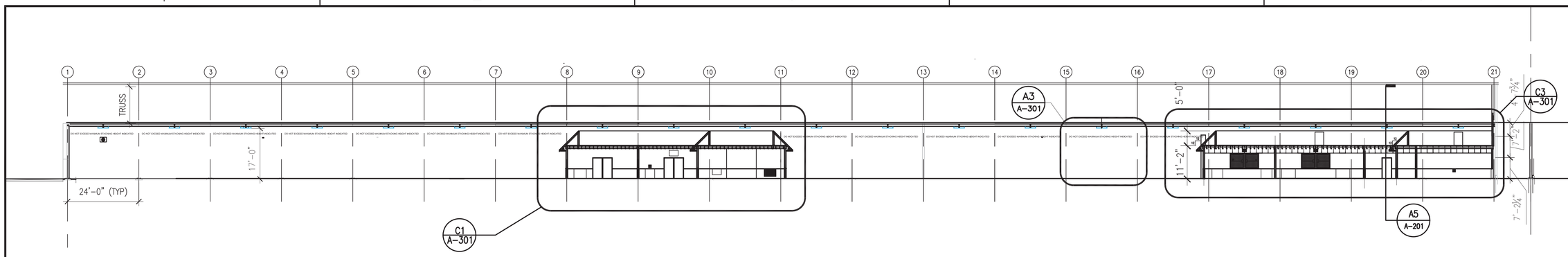

ARCHITECTURAL NEW WORK SECTION ALONG COLUMN LINE D (COLUMN LINE A SIMILAR)

SCALE: NONE

D1
A-301

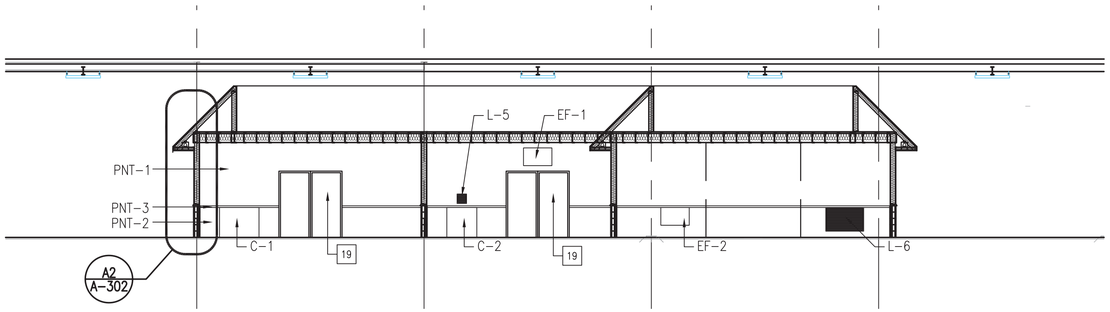

ARCHITECTURAL NEW WORK SECTION - ROOMS

SCALE: 1/8" = 1'-0"

C1
A-301

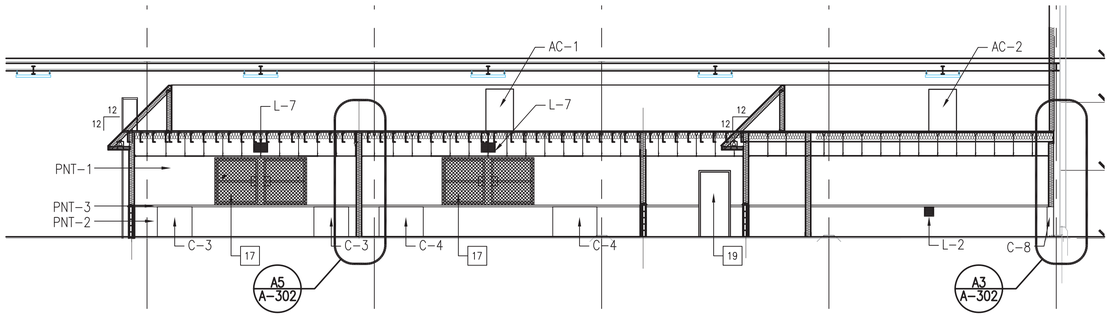

ARCHITECTURAL NEW WORK SECTION - ROOMS

SCALE: 1/8" = 1'-0"

C3
A-301

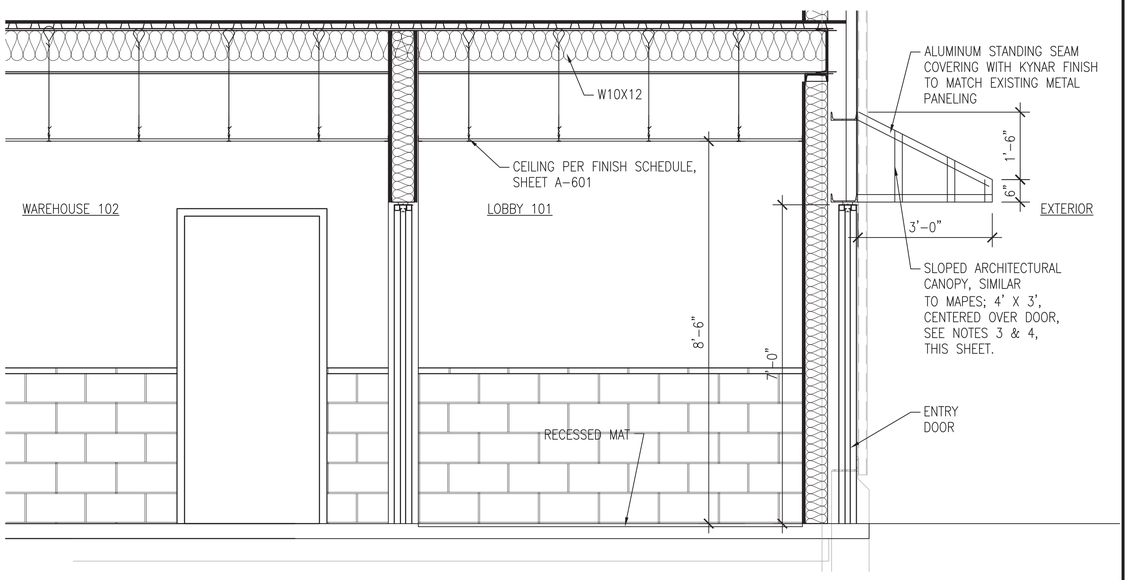

SECTION THRU PERSONNEL DOOR

SCALE: NONE

A1
A-301

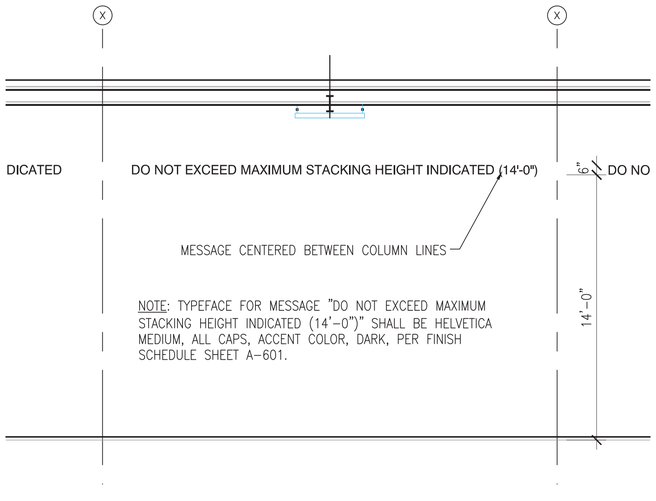

NOTE: TYPEFACE FOR MESSAGE "DO NOT EXCEED MAXIMUM STACKING HEIGHT INDICATED (14'-0")" SHALL BE HELVETICA MEDIUM, ALL CAPS, ACCENT COLOR, DARK, PER FINISH SCHEDULE SHEET A-601.

A3 PAINTED SIGNAGE ON EXT. WALLS

SCALE: NONE

A-301

X NEW WORK NOTES - THIS SHEET

1. SEE SHEET A-101 FOR NEW WORK NOTES
2. SEE FINISH SCHEDULE SHEET A-601 FOR COLORS
3. SEE STRUCTURAL FOR FRAMING AT EXTERIOR DOORS.
4. CANOPIES OVER EXTERIOR PERSONNEL DOORS SHALL BE CONTRACTOR DESIGNED. PROVIDE SEALED STRUCTURAL CALCULATIONS FOR GOVERNMENT REVIEW AND APPROVAL.
5. SEE MECHANICAL SCHEDULES FOR CONVECTORS, EXHAUST FANS, AND LOUVERS.
6. WINDOW GUARDS TO MATCH EXISTING SHALL BE PROVIDED WITH HINGED ACCESS PANELS FOR OPERATION OF DOUBLE HUNG WINDOWS IN OFFICE, LOCKER ROOM, AND BREAK ROOM.

GRAPHIC SCALE

1/8" = 1'-0" 0 4' 8' 16'

1/4" = 1'-0" 0 2' 4' 8'

SYM	DESCRIPTION	DATE	APPR

NAVFAC

SEAL

A/E INFO

APPROVED
FOR RALPH DEAL 3/23/15
FOR COMMANDER NAVFAC

ACTIVITY

SATISFACTORY TO DATE 3-23-15

DES RMR DRW RMR CHK SWC

<<PM/DM>> R. M. RUSSELL

BRANCH MANAGER

ENGR DIRECTOR Ralph D. Deal

CUSTOMER

DEPARTMENT OF THE NAVY
NAVAL FACILITIES ENGINEERING COMMAND
PWD PORTSMOUTH

NAVAL FACILITIES ENGINEERING COMMAND ~ MID ATLANTIC
NORFOLK NAVAL SHIPYARD - PORTSMOUTH, VIRGINIA

NORFOLK NAVAL SHIPYARD

PORTSMOUTH, VIRGINIA

B260 EXTENSIVE REPAIRS

ARCHITECTURAL NEW WORK ELEVATIONS

SCALE: AS NOTED

EPROJECT NO.: 1146716

CONSTR. CONTR. NO. N40085-15-R-0018

NAVFAC DRAWING NO. 12681999

SHEET 45 OF 118

A-301

DRAWFORM REVISION: 10 MARCH 2009

FILE NAME: P:\VA\NNSY\Buildings\0260\2011_1146716_Nuclear Materials Whse Repairs\B_Design\Drawings\BLDG260-1146716-A-301_302.dwg LAYOUT NAME: A-301 PLOTTED: Monday, March 16, 2015 - 2:36pm USER: renee.russell

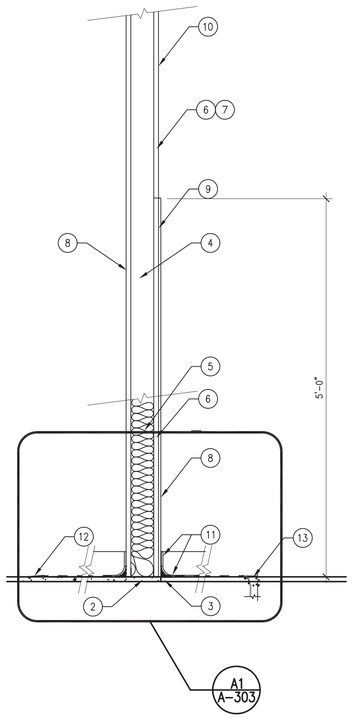

TYPE A WALL NOTES - BASIC ELEMENTS

1. EXISTING CONCRETE FLOOR TO REMAIN
2. CONCRETE OVERLAY, POLISHED
3. CONCRETE OVERLAY AND EPOXY MATRIX FINISH
4. 3-5/8" GALV. STEEL STUD AND TRACK, 20 GA., 24" O.C.
5. 3-1/2" MINERAL WOOL INSULATION, FULL HEIGHT OF WALL
6. 5/8" MOISTURE-RESISTANT, TYPE-X GWB
7. 5/8" CEMENTITIOUS BACKER BOARD
8. 5/8" MOISTURE-RESISTANT, TYPE-X GWB, IMPACT RESISTANT
9. 1/8" THICK GLAZED CERAMIC WALL TILE
10. HIGH PERFORMANCE PAINT FINISH ON GWB
11. 1/4" THICK EPOXY MATRIX FINISH WITH 4" HIGH COVED BASE
12. RESILIENT TRANSITION STRIP
13. FLOOR DRAIN, RECESSED 1/8" BELOW SLOPED FLOOR FINISH

NOTE: SEE STRUCTURAL FOR LIMITS OF NEW CONCRETE IN TOILETS AND JANITOR CLOSET.

A1 WALL SECTION A
SCALE: 1" = 1'-0" A-501

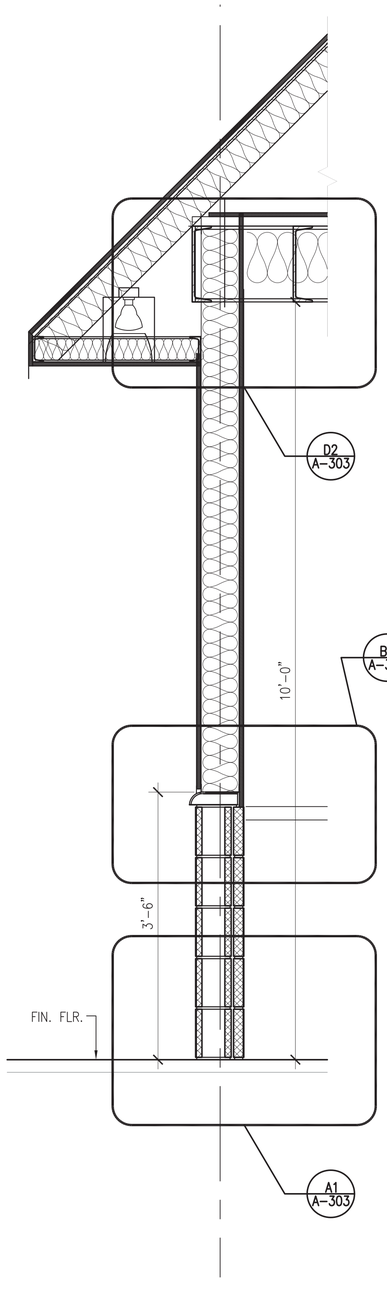

A2 WALL SECTION B
SCALE: 1" = 1'-0" A-301

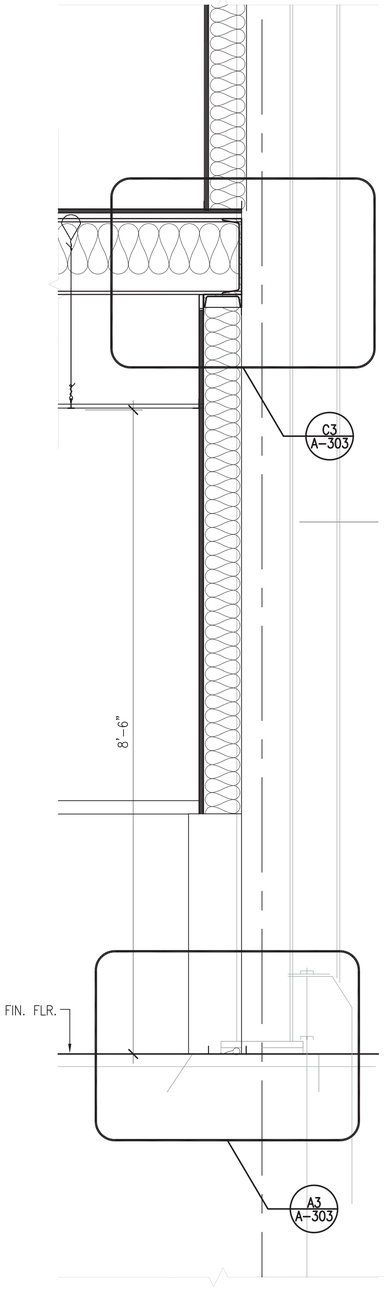

A3 WALL SECTION C
SCALE: 1" = 1'-0" A-301

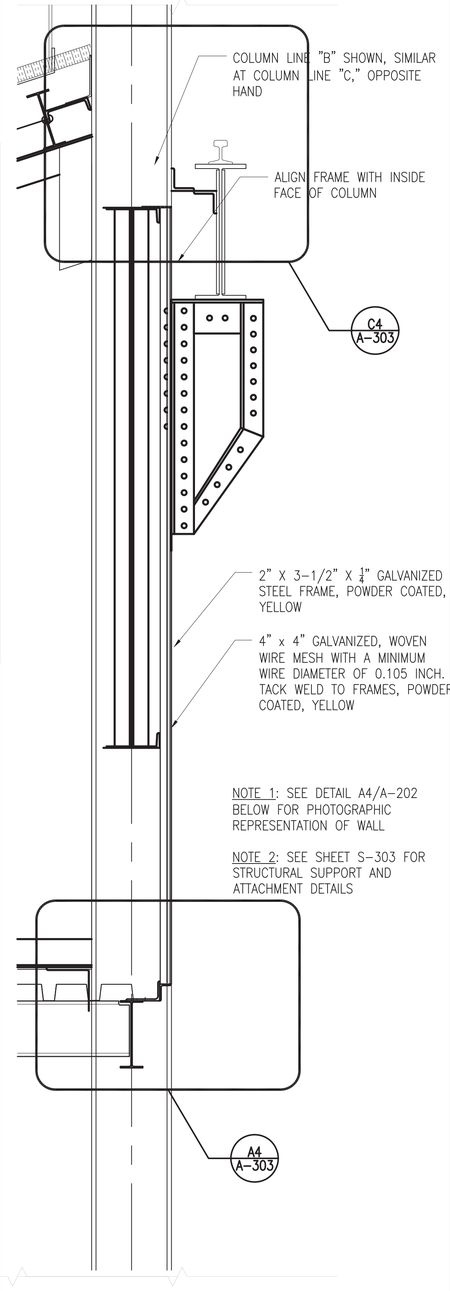

A4 WALL SECTION D
SCALE: 1" = 1'-0" A-202

NEW WORK NOTES

1. SEE SHEET A-401 FOR ENLARGED PLAN OF TOILET ROOMS AND SHEET A-501 ELEVATIONS.

GRAPHIC SCALE

1" = 1'-0" 0 6" 1' 2'

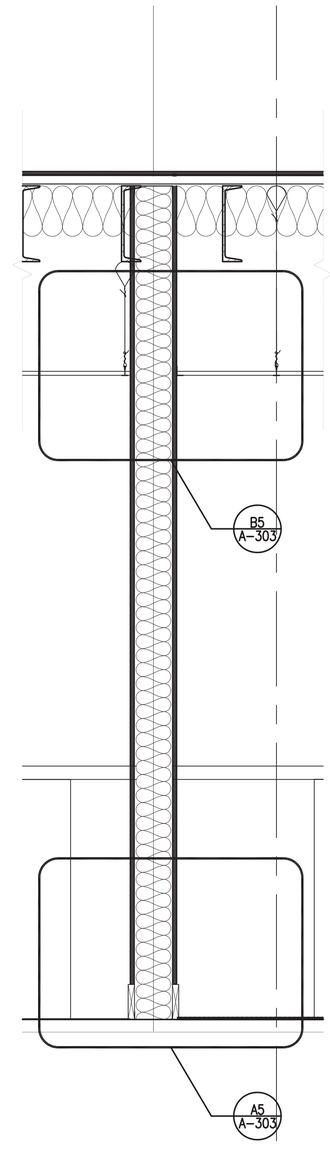

A5 WALL SECTION E
SCALE: 1" = 1'-0" A-301

APPR	DATE	DESCRIPTION	SYM

NAVFAC

SEAL

A/E INFO

APPROVED
FOR RALPH DEAL 2/23/15
FOR COMMANDER NAVFAC

ACTIVITY
SATISFACTORY TO DATE 3-24-15

DES	RMR	DRW	RMR	CHK	SWC

<<PM/DM>> R. M. RUSSELL
BRANCH MANAGER
ENGR DIRECTOR Ralph D. Deal
CUSTOMER

DEPARTMENT OF THE NAVY
NAVAL FACILITIES ENGINEERING COMMAND
PWD PORTSMOUTH

NAVAL FACILITIES ENGINEERING COMMAND – MID ATLANTIC
NORFOLK NAVAL SHIPYARD – PORTSMOUTH, VIRGINIA

NORFOLK NAVAL SHIPYARD
PORTSMOUTH, VIRGINIA

B260 EXTENSIVE REPAIRS

ARCHITECTURAL NEW WORK WALL SECTIONS

SCALE: AS NOTED
EPROJECT NO.: 1146716
CONSTR. CONTR. NO.: N40085-15-R-0018
NAVFAC DRAWING NO.: 12682000
SHEET 46 OF 118

A-302

DRAWFORM REVISION: 10 MARCH 2009

FILE NAME: P:\VA\VNS\Buildings\0260\2011_1146716_Nuckler Materials Wise Repairs\B_Design\Drawings\BLDG260-1146716-A-301_302.dwg LAYOUT NAME: A-302 PLOTTED: Monday, March 16, 2015 - 2:39pm USER: renee.russell

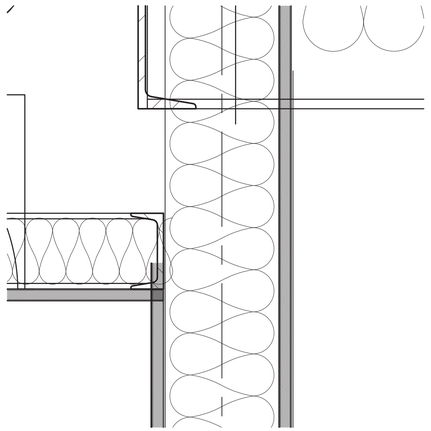

D2 WALL SECTION B - TOP OF WALL
SCALE: 3" = 1'-0" A-301

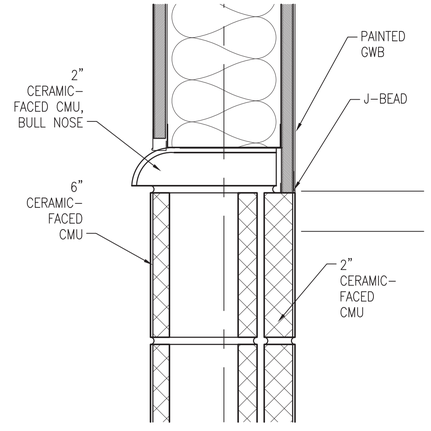

B2 WALL SECTION B - TOP OF CMU
SCALE: 3" = 1'-0" A-301

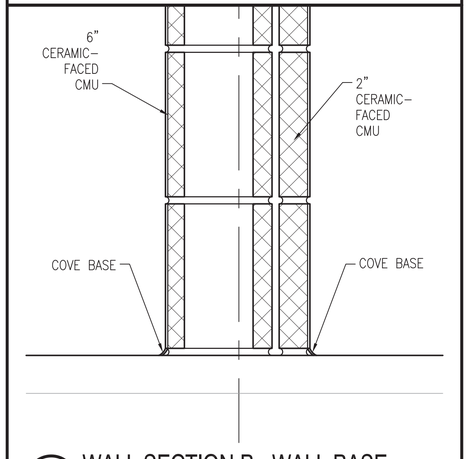

A2 WALL SECTION B - WALL BASE
SCALE: 3" = 1'-0" A-301

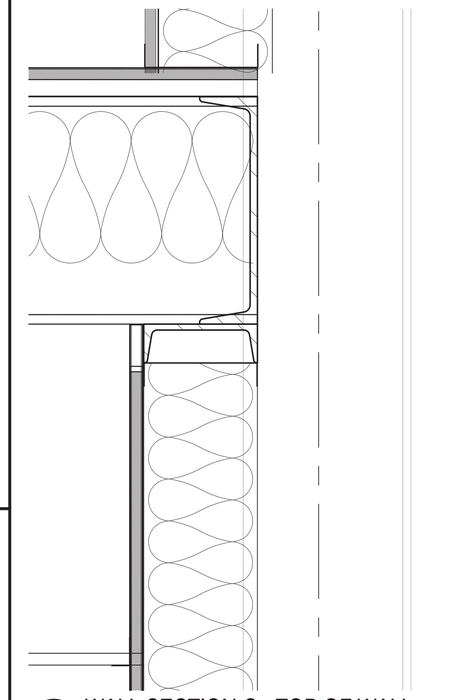

C3 WALL SECTION C - TOP OF WALL
SCALE: 3" = 1'-0" A-301

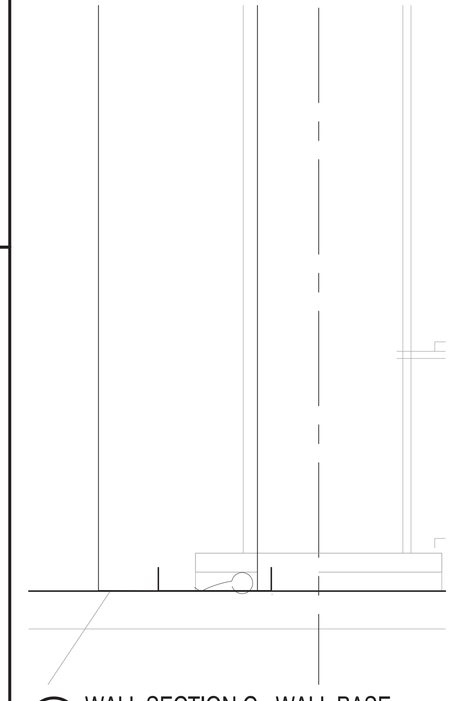

A3 WALL SECTION C - WALL BASE
SCALE: 3" = 1'-0" A-301

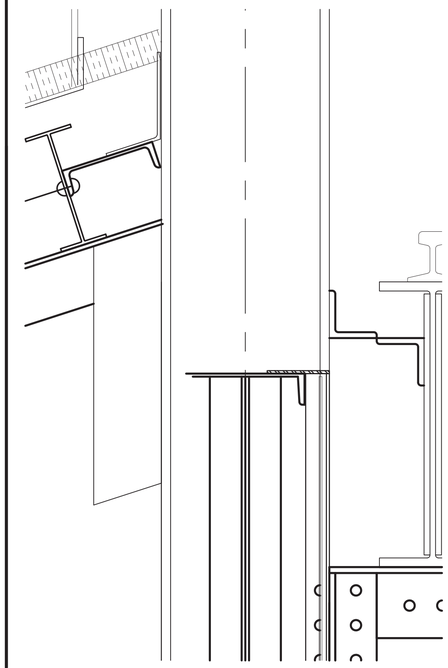

C4 WALL SECTION D - TOP OF WALL
SCALE: 3" = 1'-0" A-202

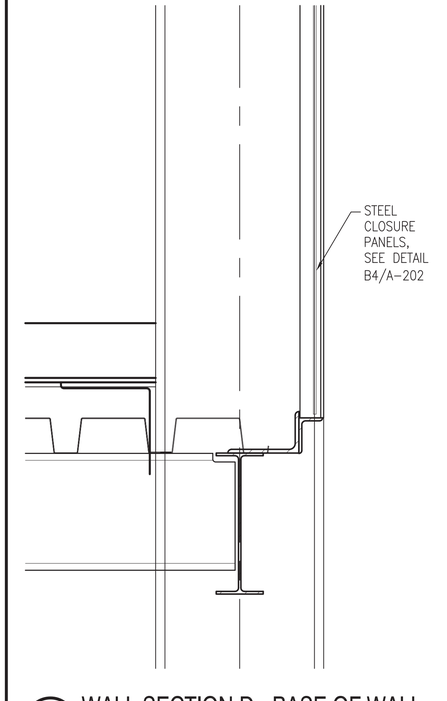

A4 WALL SECTION D - BASE OF WALL
SCALE: 3" = 1'-0" A-302

NEW WORK NOTES

1. SEE SHEET A-302 FOR FOR FULL WALL SECTIONS.
2. SEE STRUCTURAL FOR REINFORCEMENT OF MASONRY WALLS.

GRAPHIC SCALE

3" = 1'-0" 0 2" 4" 8"

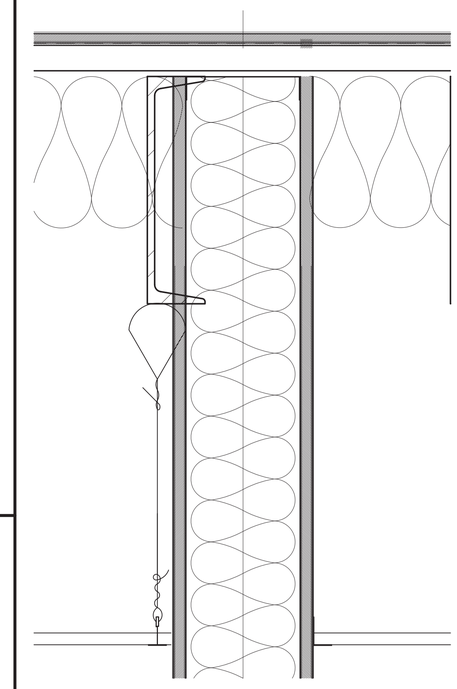

B5 WALL SECTION E - TOP OF WALL
SCALE: 3" = 1'-0" A-301

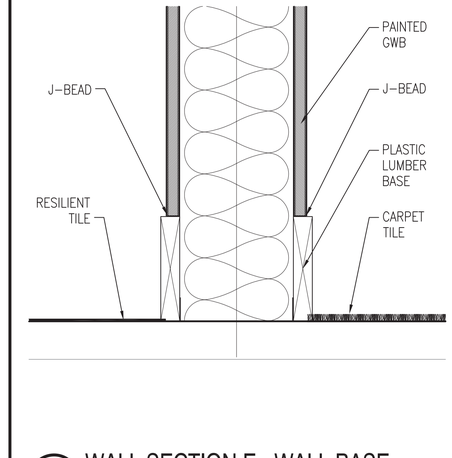

A5 WALL SECTION E - WALL BASE
SCALE: 3" = 1'-0" A-301

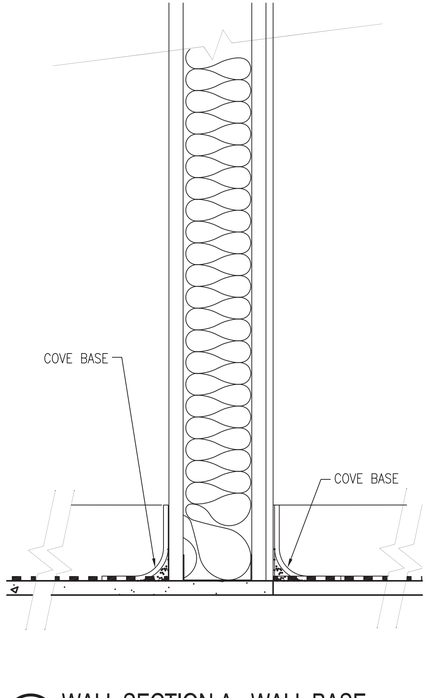

A1 WALL SECTION A - WALL BASE
SCALE: 3" = 1'-0" A-501

APPR	DATE	DESCRIPTION	SYM

NAVFAC

SEAL

A/E INFO

APPROVED
FOR RALPH DEAL 3/23/15
FOR COMMANDER NAVFAC

ACTIVITY
SATISFACTORY TO DATE 3-23-15

DES	RMR	DRW	RMR	CHK	SWC

<<PM/DM>> R. M. RUSSELL
BRANCH MANAGER
ENGR DIRECTOR Ralph D. Deal
CUSTOMER

DEPARTMENT OF THE NAVY
NAVAL FACILITIES ENGINEERING COMMAND
PWD PORTSMOUTH

NAVAL FACILITIES ENGINEERING COMMAND – MID ATLANTIC
NORFOLK NAVAL SHIPYARD – PORTSMOUTH, VIRGINIA
NORFOLK NAVAL SHIPYARD
PORTSMOUTH, VIRGINIA

B260 EXTENSIVE REPAIRS

ARCHITECTURAL WALL SECTIONS – DETAILS

SCALE:	AS NOTED
EPROJECT NO.:	1146716
CONSTR. CONTR. NO.	N40085-15-R-0018
NAVFAC DRAWING NO.	12682001
SHEET	47 OF 118

A-303

DRAWFORM REVISION: 10 MARCH 2009

FILE NAME: P:\VA\VNSY\Buildings\0260\2011_1146716_Nuclear Materials Wise Repairs\B_Design\Drawings\BLDG260-1146716-A-301_302.dwg LAYOUT NAME: A-303 PLOTTED: Monday, March 16, 2015 – 2:40pm USER: renee.russell

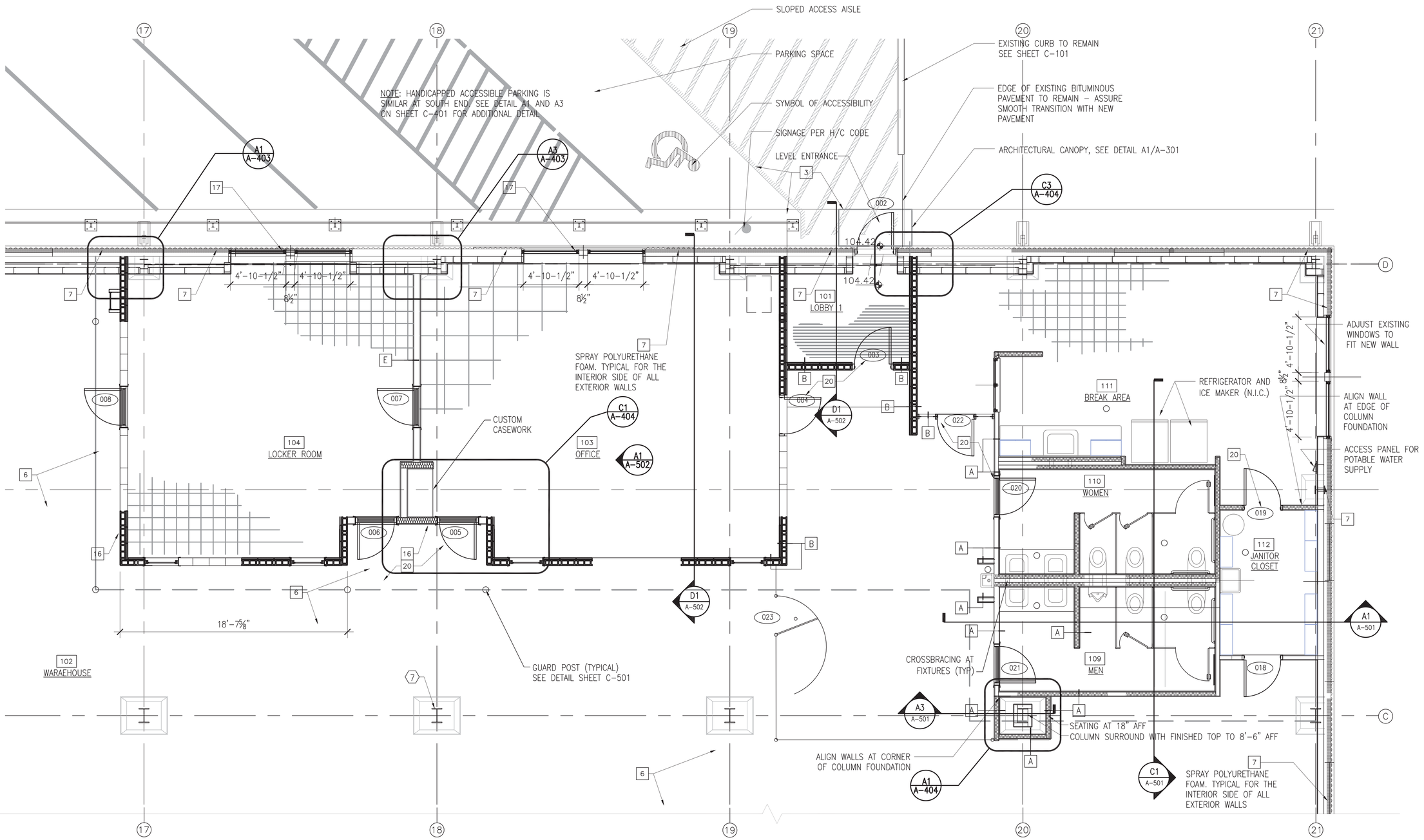

PLAN AT LOBBY, OFFICE, LOCKER ROOM, BREAK AREA, AND REST ROOMS

SCALE: 1/4" = 1' – 0"

A1 / A-401

GENERAL NOTES - THIS SHEET

1. NEW WORK NOTES ARE SHOWN ON SHEET A–101.

2. THIS SHEET CONTAINS ENLARGED PLANS OF ACCESSORY AREAS OF THE WAREHOUSE. SEE SHEET A–402 FOR ADDITIONAL ENLARGED PLANS AND SHEET F–401 FOR INTERIOR EQUIPMENT LAYOUT OF THE PUMP ROOM.

3. SEE ELEVATIONS SHEET A–301 FOR MECHANICAL EQUIPMENT THROUGH EXTERIOR WALL.

GRAPHIC SCALE

0 2' 4' 8'

SCALE: 1/4" = 1'–0"

WALL LEGEND

SEE ARCHITECTURAL WALL SECTIONS ON SHEET A–501 FOR INDICATED WALL TYPES

A B C

APPR | DATE | SYM | DESCRIPTION

NAVFAC

SEAL

A/E INFO

APPROVED
FOR COMMANDER NAVFAC
3/25/15

ACTIVITY

SATISFACTORY TO DATE 3-25-15

DES	RMR	DRW	RMR	CHK	SWC
<<PM/DM>>	R. M. RUSSELL				
BRANCH MANAGER					
ENGR DIRECTOR	Ralph D. Deal				
CUSTOMER					

DEPARTMENT OF THE NAVY
NAVAL FACILITIES ENGINEERING COMMAND
PWD PORTSMOUTH

NAVAL FACILITIES ENGINEERING COMMAND ~ MID ATLANTIC
NORFOLK NAVAL SHIPYARD - PORTSMOUTH, VIRGINIA

NORFOLK NAVAL SHIPYARD
PORTSMOUTH, VIRGINIA

B260 EXTENSIVE REPAIRS

LARGE SCALE ARCHITECTURAL PLANS

SCALE:	AS NOTED
EPROJECT NO.:	1146716
CONSTR. CONTR. NO.	N40085-15-R-0018
NAVFAC DRAWING NO.	12682002
SHEET	48 OF 118

A-401

DRAWFORM REVISION: 10 MARCH 2009

FILE NAME: P:\VA\NNSY\Buildings\Y2260\2011_1146716_Nuclear Materials White Repairs\B_Design\Drawings\BLDG260-1146716-A-401.dwg LAYOUT NAME: A-401 PLOTTED: Thursday, March 19, 2015 – 12:14pm USER: renee.russell

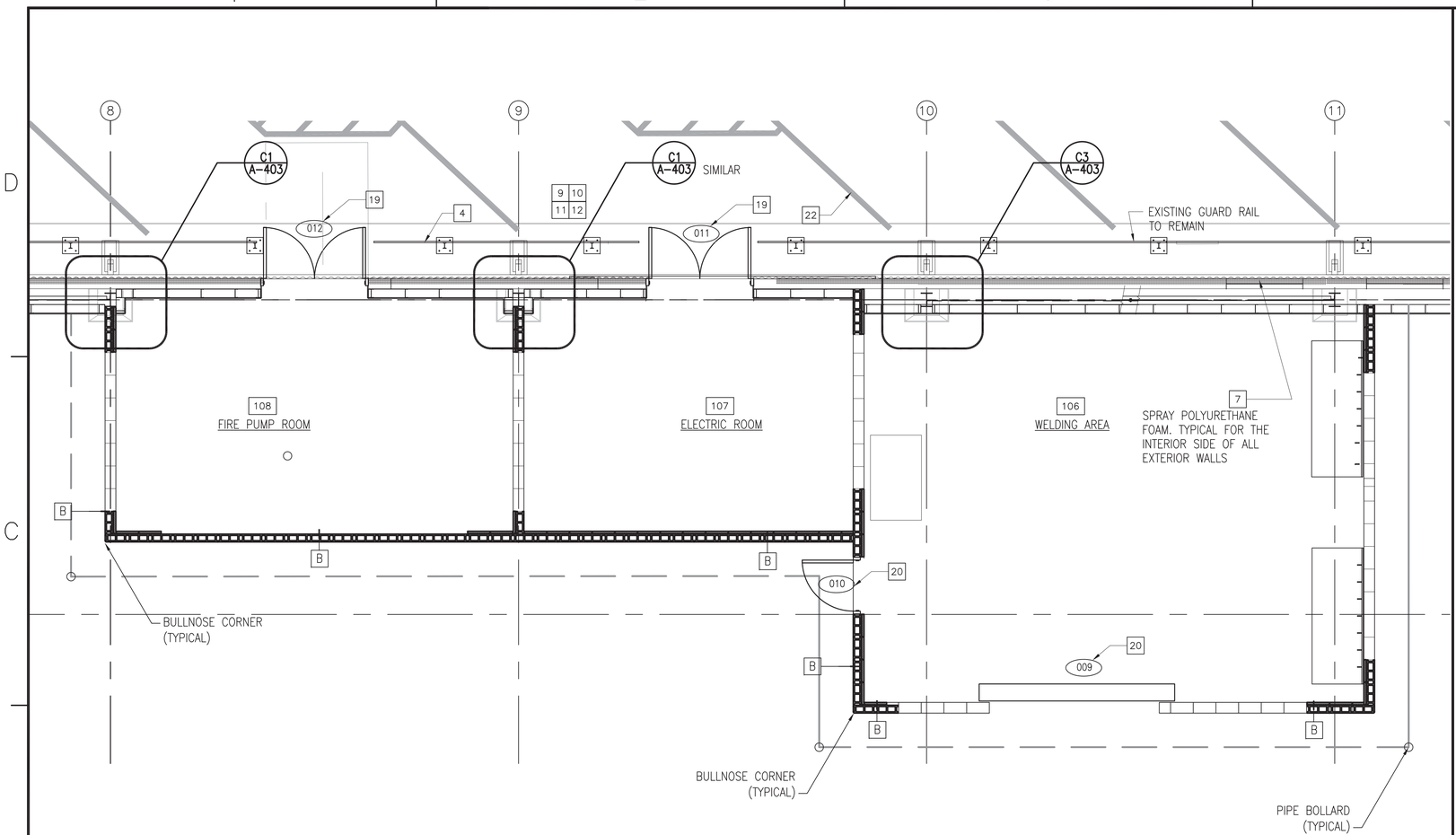

PLAN AT PUMP ROOM, ELECTRICAL ROOM, AND WELDING AREA

SCALE: 1/4" = 1' – 0"

B1 / A-402

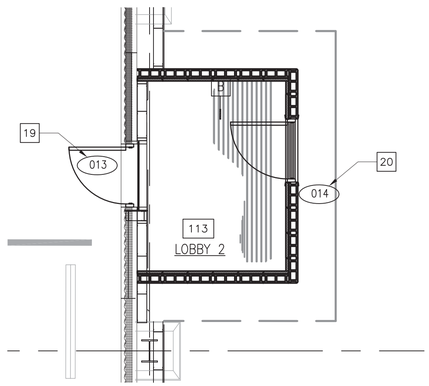

PLAN AT LOBBY 2

SCALE: 1/4" = 1' – 0"

A1 / A-402

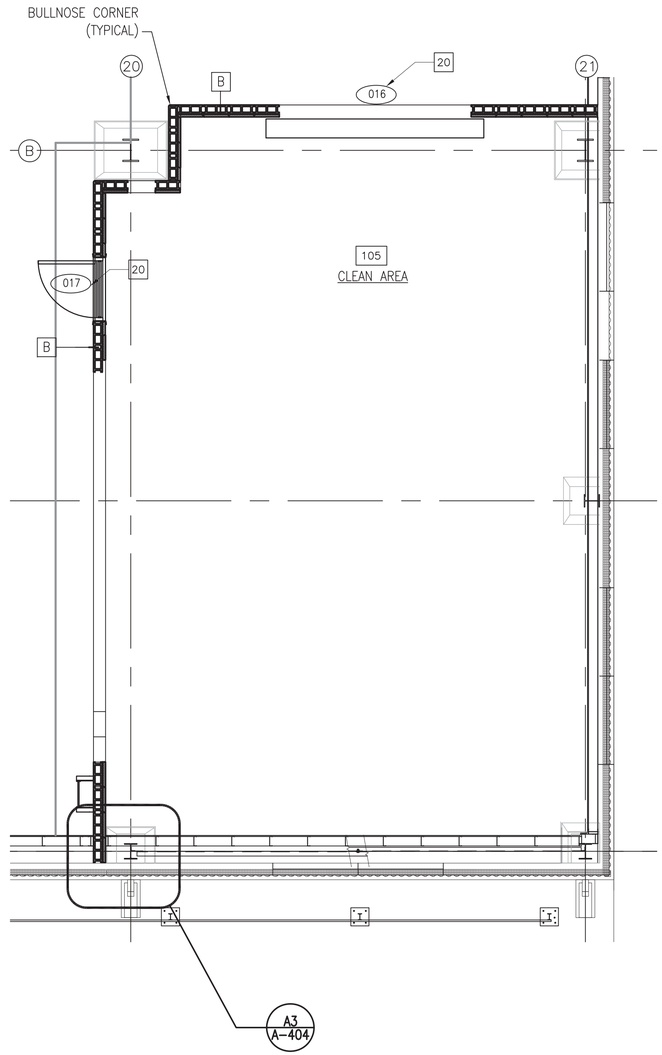

PLAN AT CLEAN AREA

SCALE: 1/4" = 1' – 0"

B4 / A-402

GENERAL NOTES - THIS SHEET

1. NEW WORK NOTES ARE SHOWN ON SHEET A-101.

2. THIS SHEET CONTAINS ENLARGED PLANS OF ACCESSORY AREAS OF THE WAREHOUSE. SEE SHEET A-401 FOR ADDITIONAL ENLARGED PLANS AND SHEET F-401 FOR INTERIOR EQUIPMENT LAYOUT OF THE PUMP ROOM.

GRAPHIC SCALE

0 2' 4' 8'

SCALE: 1/4" = 1'-0"

WALL LEGEND

SEE ARCHITECTURAL WALL SECTIONS ON SHEET A-501 FOR INDICATED WALL TYPES

A
B
C

APPR | DATE | DESCRIPTION | SYM

NAVFAC

SEAL

A/E INFO

APPROVED
FOR RALPH DEAL 2/23/15
FOR COMMANDER NAVFAC

ACTIVITY
SATISFACTORY (Y) DATE 3-25-15
DES RMR DRW RMR CHK SWC
<<PM/EM>> R. M. RUSSELL
BRANCH MANAGER
ENGR DIRECTOR Ralph D. Deal
CUSTOMER

DEPARTMENT OF THE NAVY
NAVAL FACILITIES ENGINEERING COMMAND
PWD PORTSMOUTH

NAVAL FACILITIES ENGINEERING COMMAND – MID ATLANTIC
NORFOLK NAVAL SHIPYARD – PORTSMOUTH, VIRGINIA

NORFOLK NAVAL SHIPYARD
PORTSMOUTH, VIRGINIA

B260 EXTENSIVE REPAIRS

ARCHITECTURAL LARGE SCALE PLANS

SCALE: AS NOTED
EPROJECT NO.: 1146716
CONSTR. CONTR. NO. N40085-15-R-0018
NAVFAC DRAWING NO. 12682003
SHEET 49 OF 118

A-402

DRAWFORM REVISION: 10 MARCH 2009

FILE NAME: P:\VA\VNSY\Buildings\0260\2011_1146716_Nuclear Materials Whse Repairs\B_Design\Drawings\BLDG260-1146716-A-402.dwg LAYOUT NAME: A-402 PLOTTED: Monday, March 23, 2015 – 3:14pm USER: renee.russell

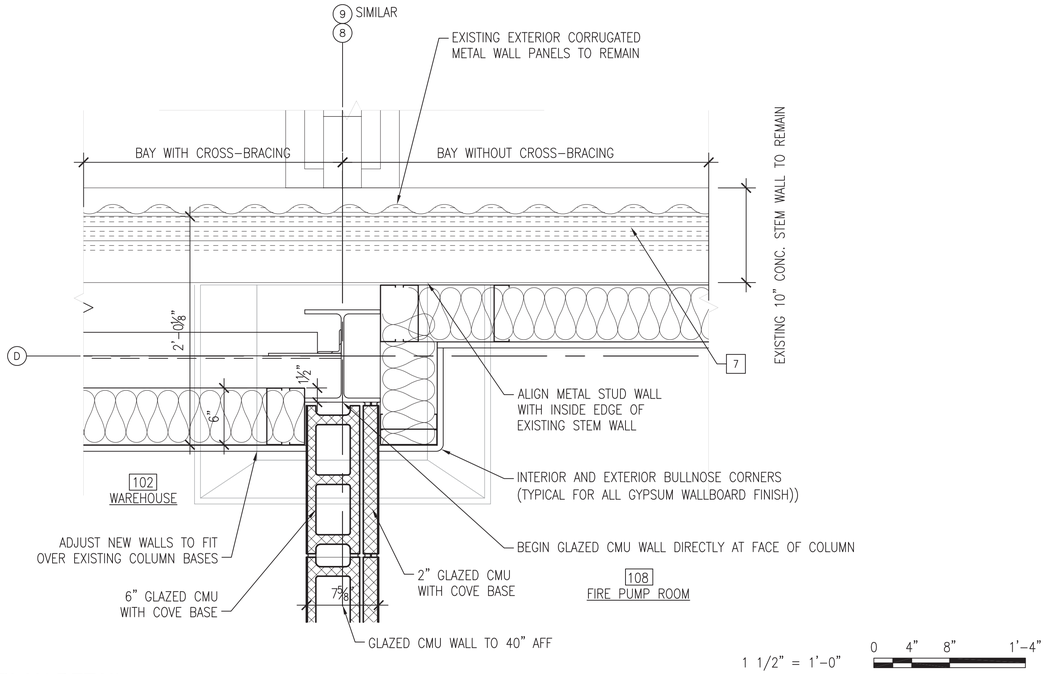

C1 PLAN DETAIL
SCALE: 1-1/2" = 1'-0"
A-403

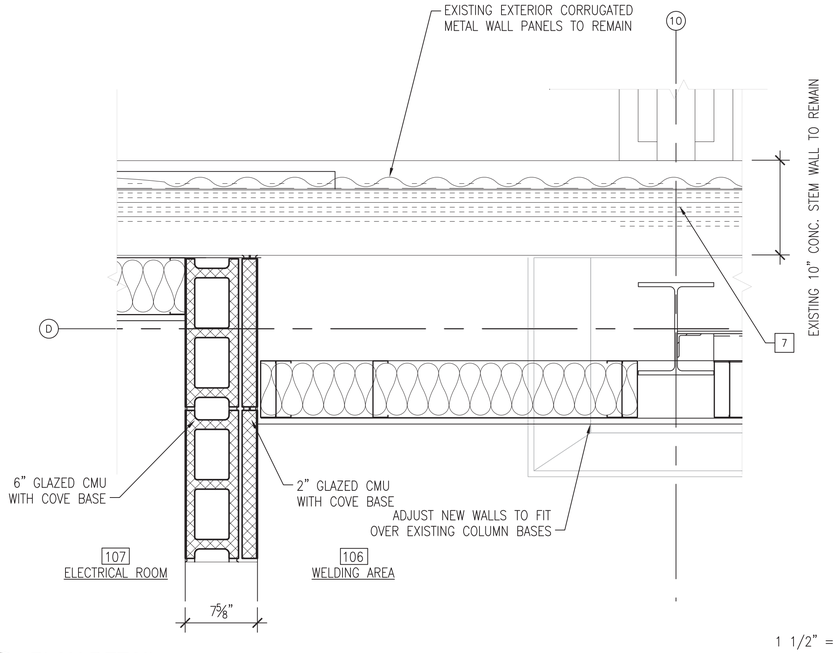

C3 PLAN DETAIL
SCALE: 1-1/2" = 1'-0"
A-403

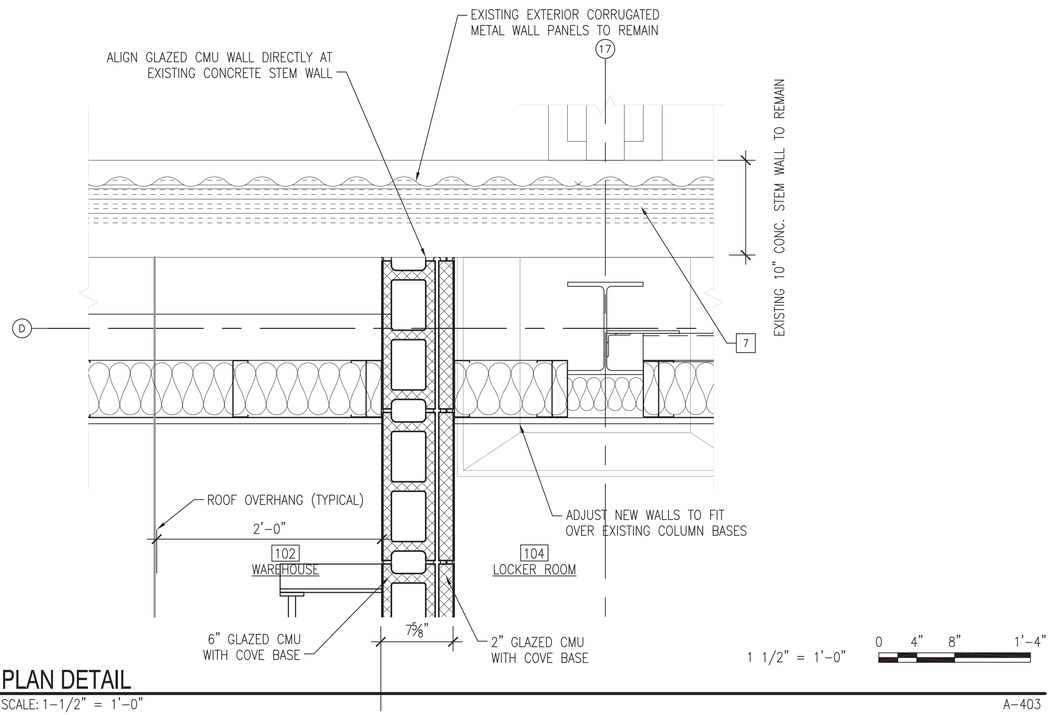

A1 PLAN DETAIL
SCALE: 1-1/2" = 1'-0"
A-403

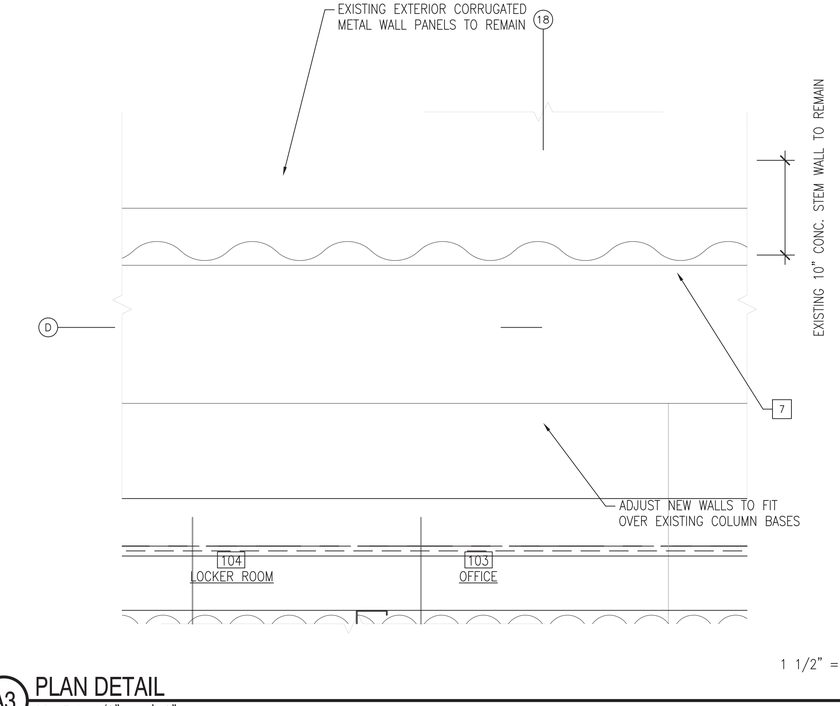

A3 PLAN DETAIL
SCALE: 1-1/2" = 1'-0"
A-403

APPR	DATE	DESCRIPTION	SYM

NAVFAC

SEAL

A/E INFO

APPROVED
FOR COMMANDER NAVFAC
3/23/15

ACTIVITY
SATISFACTORY TO DATE 3-24-15

DES: RMR	DRW: RMR	CHK: SWC

<<PM/EM>>	R. M. RUSSELL
BRANCH MANAGER	
ENGR DIRECTOR	Ralph D. Deal
CUSTOMER	

DEPARTMENT OF THE NAVY
NAVAL FACILITIES ENGINEERING COMMAND
PWD PORTSMOUTH

NAVAL FACILITIES ENGINEERING COMMAND – MID ATLANTIC
NORFOLK NAVAL SHIPYARD – PORTSMOUTH, VIRGINIA

NORFOLK NAVAL SHIPYARD
PORTSMOUTH, VIRGINIA

B260 EXTENSIVE REPAIRS

ARCHITECTURAL LARGE SCALE PLANS

SCALE:	AS NOTED
EPROJECT NO.:	1146716
CONSTR. CONTR. NO.	N40085-15-R-0018
NAVFAC DRAWING NO.	12683004
SHEET	50 OF 118

A-403

DRAWFORM REVISION: 10 MARCH 2009

FILE NAME: P:\VA\VNSY\Buildings\0260\2011_1146716_Nuclear Materials Whse Repairs\B_Design\Drawings\BLDG260-1146716-A-403-404.dwg LAYOUT NAME: A-403 PLOTTED: Monday, March 23, 2015 - 3:22pm USER: renee.russell

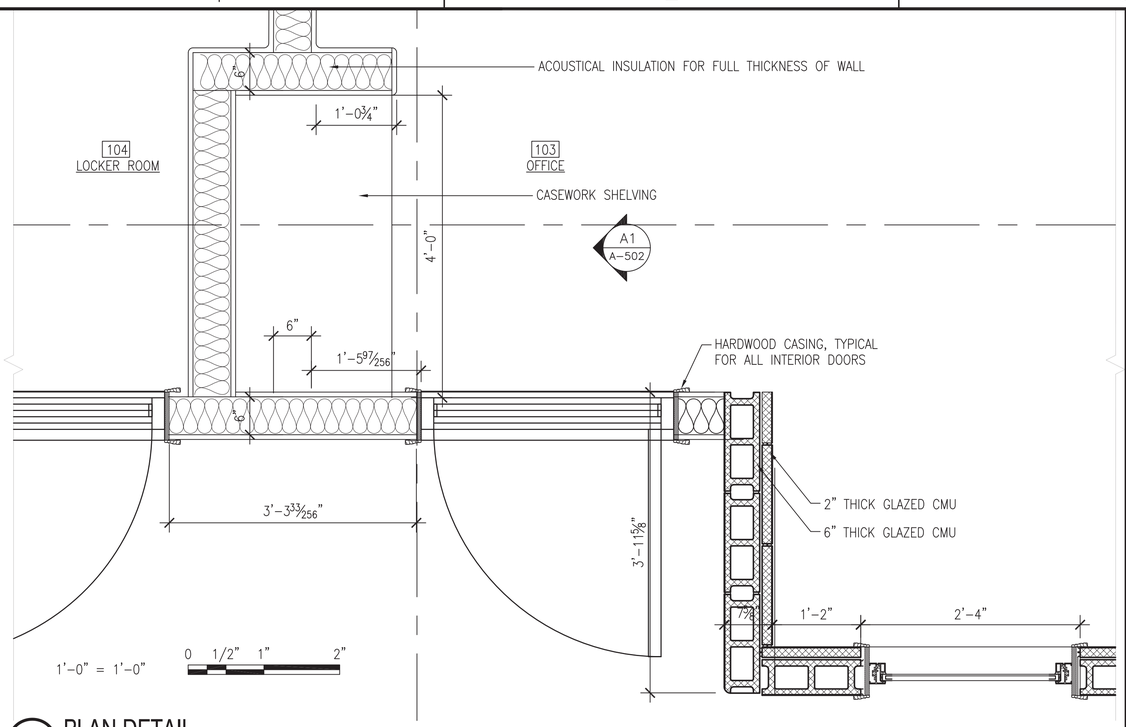

C1 PLAN DETAIL

SCALE: 1-1/2" = 1'-0"

A-404

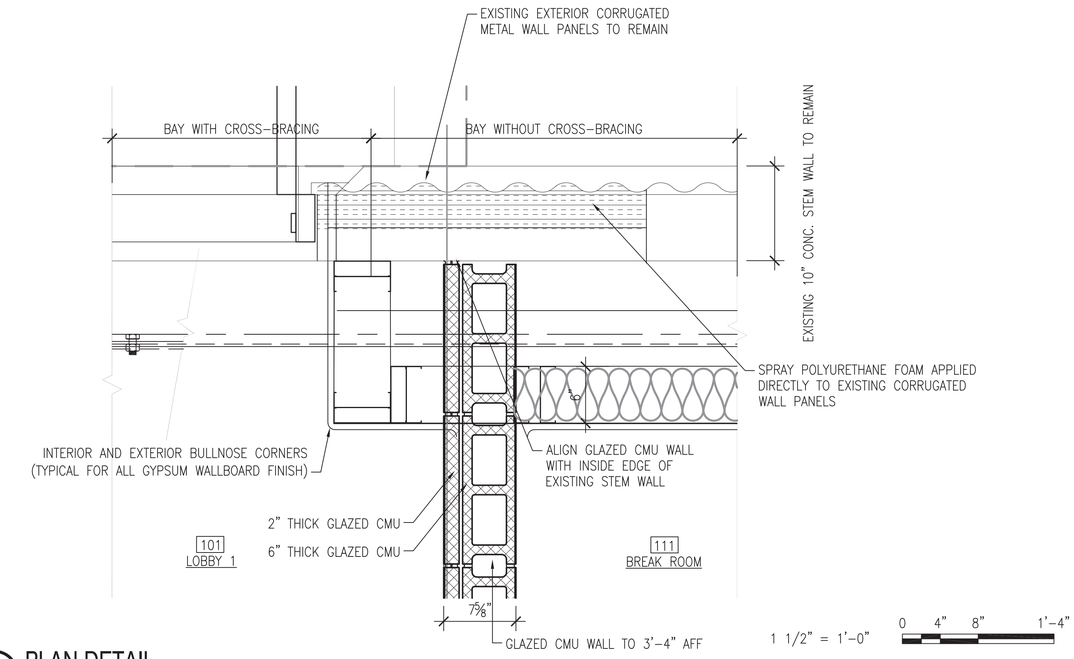

C3 PLAN DETAIL

SCALE: 1-1/2" = 1'-0"

A-404

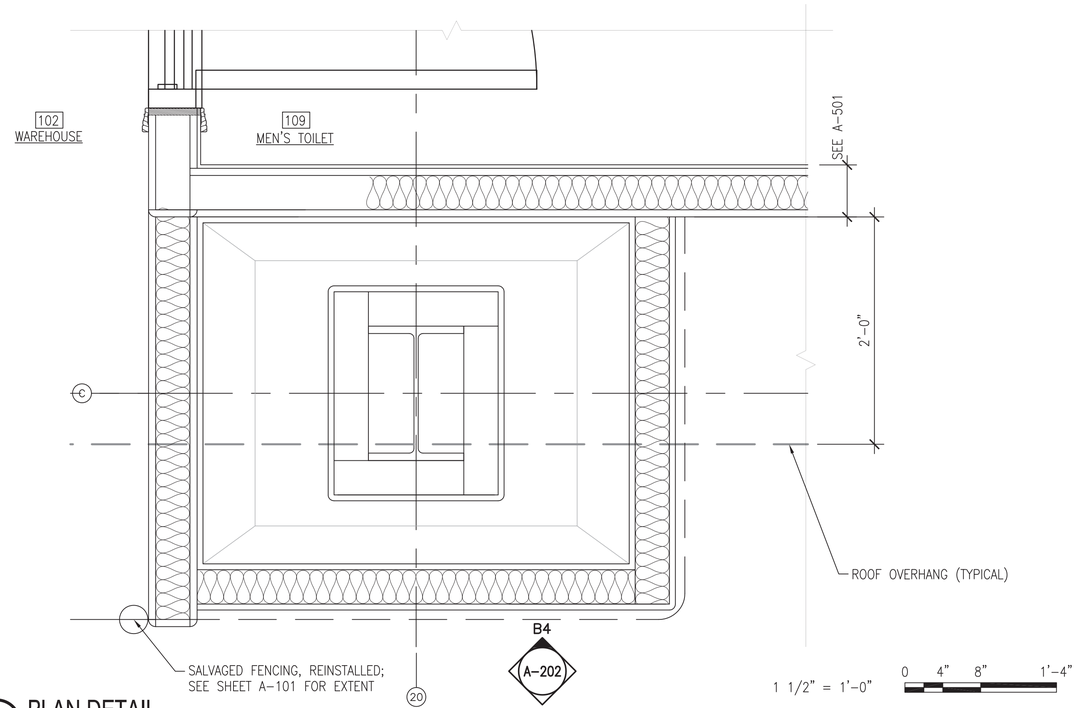

A1 PLAN DETAIL

SCALE: 1-1/2" = 1'-0"

A-403

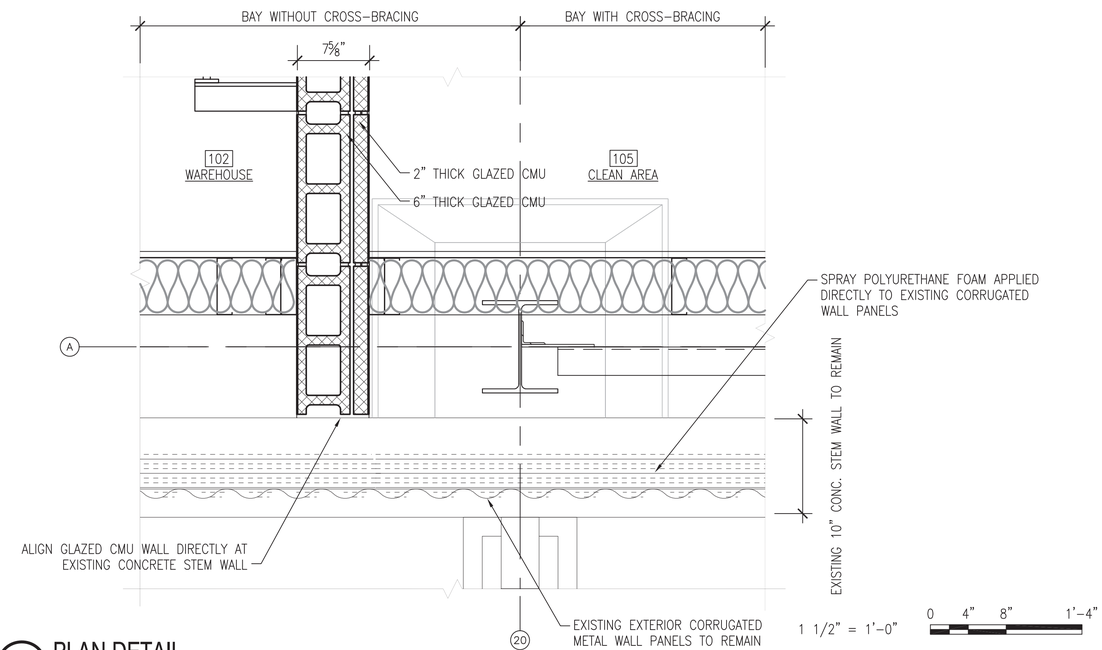

A3 PLAN DETAIL

SCALE: 1-1/2" = 1'-0"

A-404

APPR | DATE | DESCRIPTION | SYM

NAVFAC

SEAL

A/E INFO

APPROVED
FOR RALPH DEAL 3/23/15
FOR COMMANDER NAVFAC

ACTIVITY

SATISFACTORY TO DATE 3-24-15

DES RMR DRW RMR CHK SWC

<CPM/EM> R. M. RUSSELL

BRANCH MANAGER

ENGR DIRECTOR Ralph D. Deal

CUSTOMER

DEPARTMENT OF THE NAVY
NAVAL FACILITIES ENGINEERING COMMAND
PWD PORTSMOUTH

NAVAL FACILITIES ENGINEERING COMMAND – MID ATLANTIC
NORFOLK NAVAL SHIPYARD – PORTSMOUTH, VIRGINIA

NORFOLK NAVAL SHIPYARD
PORTSMOUTH, VIRGINIA

B260 EXTENSIVE REPAIRS

ARCHITECTURAL LARGE SCALE PLANS

SCALE: AS NOTED

EPROJECT NO.: 1146716

CONSTR. CONTR. NO.
N40085-15-R-0018

NAVFAC DRAWING NO.
12682005

SHEET 51 OF 118

A-404

DRAWFORM REVISION: 10 MARCH 2009

FILE NAME: P:\VA\VNSY\Buildings\0260\2011_1146716_Nuclear Materials Whse Repairs\B_Design\Drawings\BLDG260-1146716-A-403-404.dwg LAYOUT NAME: A-404 PLOTTED: Monday, March 23, 2015 - 3:24pm USER: renee.russell

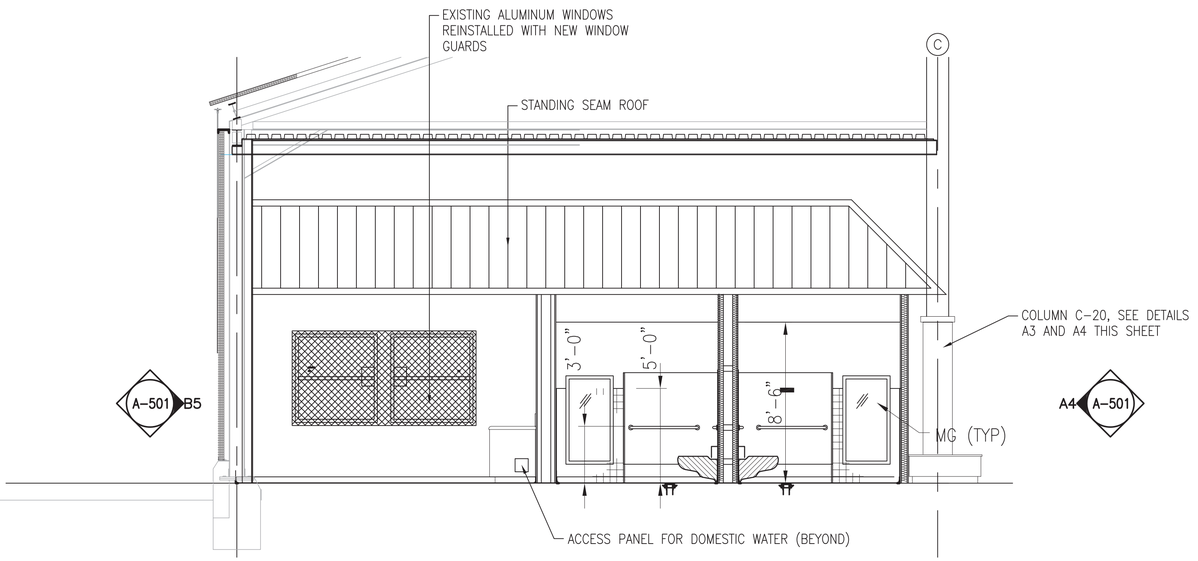

ACCESSORIES REQUIRED

ROOM	GB	MG	MT	SD	SMHD	TTD	WR	MH
MENS TOILET	Y	Y	Y	Y	Y	Y	Y	N
WOMEN'S TOILET	Y	Y	Y	Y	Y	Y	Y	N
JANITOR CLOSET	N	N	N	Y	Y	N	Y	Y

C1 ELEVATION
SCALE: 1/4" = 1'-0"

A-401

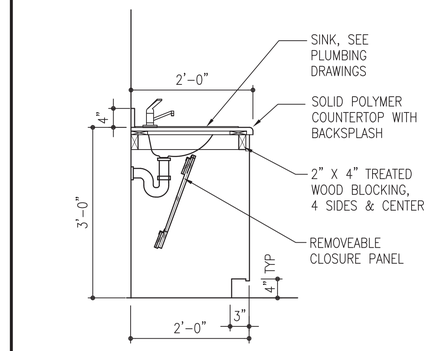

SECTION CASEWORK AT LAVS
SCALE: 3/4" = 1'-0"

C4 / A-501

ACCESSORY LEGEND

SYM	DESCRIPTION
GB	GRAB BAR
MG	MIRROR GLASS
MT	MIRROR, TILT
SD	SOAP DISPENSER
SMHD	SHELF, METAL, HVY DUTY
TTD	TOILET TISSUE DISPENSER
WR	WASTE RECEPTACLE
MH	MOP & BROOM HOLDER

GENERAL NOTES

1. INTERIOR PARTITION TYPES AS INDICATED AT DETAIL A1/A-302 SHALL COMPLY WITH UNDERWRITERS LABORATORY (UL) DESIGN U-425 – LOAD BEARING STEEL STUD WALLS WITH GYPSUM WALLBOARD PROTECTION.
2. COORDINATE ARCHITECTURAL WORK WITH CONSTRUCTION DOCUMENTS FOR OTHER DISCIPLINES.

NEW WORK NOTES

1. NEW WORK NOTES ARE SHOWN ON SHEET A-101.
2. THIS SHEET CONTAINS ELEVATIONS FOR THE BREAK ROOM AND TOILET ROOMS, AND DETAILS OF COLUMN C-20.
3. ARCHITECTURAL CABINETS SHALL BE CONSTRUCTED IN ACCORDANCE WITH ARCHITECTURAL WOODWORK INSTITUTE (AWI) QUALITY STANDARDS. SEE DETAIL B5 THIS SHEET.
4. SEE SPECIFICATIONS SECTION 10 28 13 FOR TOILET ACCESSORIES DESIGNATION IN TABLE THIS SHEET.

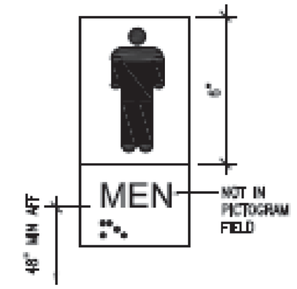

B5 SIGNAGE
SCALE: NONE

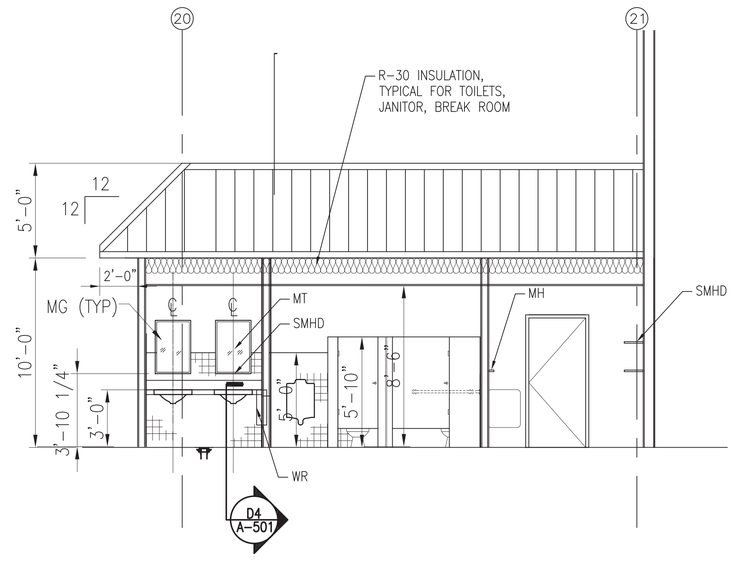

A1 ELEVATION
SCALE: 1/4" = 1'-0"

A-401

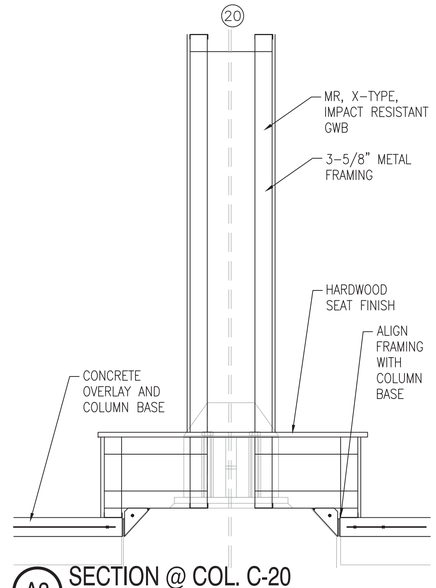

A3 SECTION @ COL. C-20
SCALE: 3/4" = 1'-0"

A-301

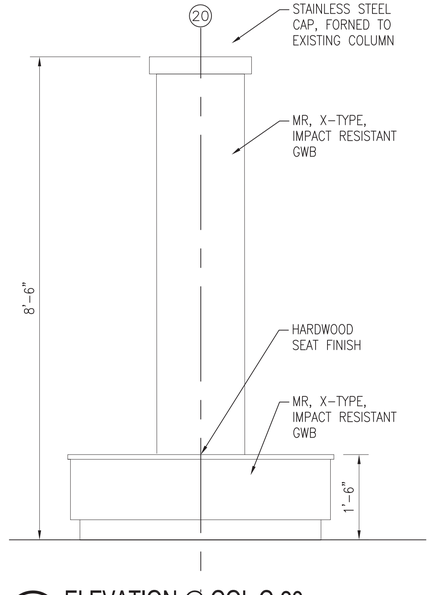

A4 ELEVATION @ COL C-20
SCALE: 3/4" = 1'-0"

A-201, A-501

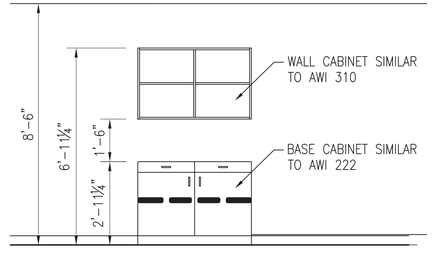

B5 ELEV @ BREAK ROOM CASEWORK
SCALE: 3/8" = 1'-0"

A-501

GRAPHIC SCALE

1/4" = 1'-0" — 0 2' 4' 8'

3/8" = 1'-0" — 0 1'-4" 2'-8" 5'-4"

3/4" = 1'-0" — 0 8" 1'-4" 2'-8"

APPR | DATE | DESCRIPTION | SYM

NAVFAC

SEAL

A/E INFO

APPROVED
FOR RALPH DEAL 3/23/15
FOR COMMANDER NAVFAC

ACTIVITY

SATISFACTORY TO DATE 3-23-15

DES RMR | DRW RMR | CHK SWC

<<PM/DM>> R. M. RUSSELL

BRANCH MANAGER

ENGR DIRECTOR Ralph D. Deal

CUSTOMER

DEPARTMENT OF THE NAVY
NAVAL FACILITIES ENGINEERING COMMAND
PWD PORTSMOUTH

NAVAL FACILITIES ENGINEERING COMMAND – MID ATLANTIC
NORFOLK NAVAL SHIPYARD – PORTSMOUTH, VIRGINIA

NORFOLK NAVAL SHIPYARD
PORTSMOUTH, VIRGINIA

B260 EXTENSIVE REPAIRS

ARCHITECTURAL INTERIOR DETAILS

SCALE: AS NOTED
EPROJECT NO.: 1146716
CONSTR. CONTR. NO.
N40085-15-R-0018
NAVFAC DRAWING NO.
12682006
SHEET 52 OF 118

A-501

DRAWFORM REVISION: 10 MARCH 2009

FILE NAME: P:\VA\VN57\Buildings\0260\2011_1146716_Nuclear Materials Wrse Repairs\B_Design\Drawings\BLDG260-1146716-A-501.dwg LAYOUT NAME: A-501 PLOTTED: Tuesday, March 17, 2015 – 11:08am USER: renee.russell

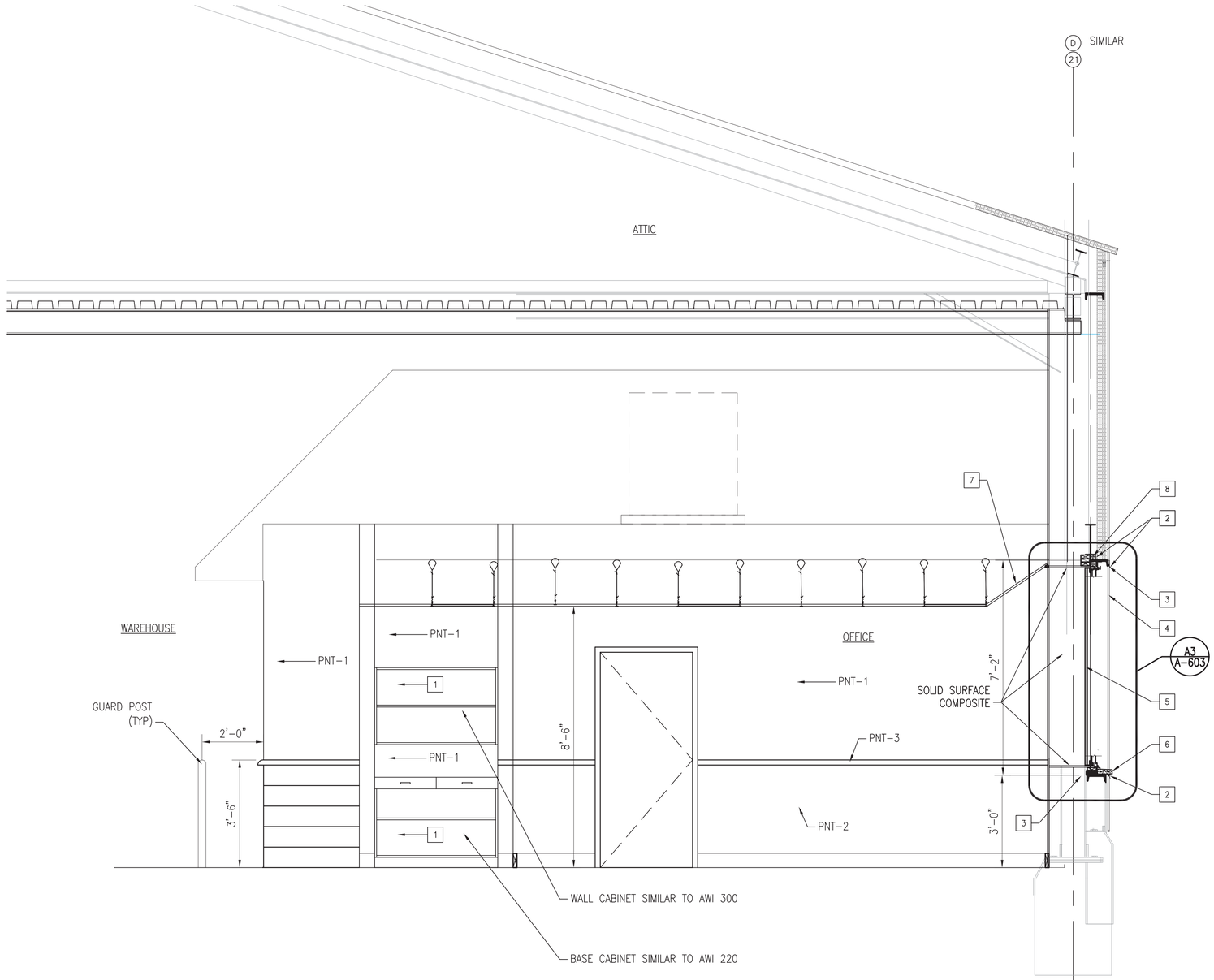

A1 ELEVATION AT OFFICE

SCALE: 1/2"= 1'-0"

A-401

GENERAL NOTES

1. NEW WORK NOTES ARE SHOWN ON SHEET A-101. SEE SPECIFIC NOTES BELOW.

[X] NEW WORK NOTES -THIS SHEET

1. CUSTOM CASEWORK SHALL BE ADJUSTED TO FIT INTERIOR CONSTRUCTION. THESE ARCHITECTURAL CABINETS SHALL BE CONSTRUCTED IN ACCORDANCE WITH ARCHITECTURAL WOODWORK INSTITUTE (AWI) QUALITY STANDARDS. SEE DETAIL C1 THIS SHEET.
2. PROVIDE TYPE 316 STAINLESS STEEL THROUGH-WALL FLASHING ON ALL SIDES AT WINDOWS AND OTHER OPENINGS. FLASHING SHALL EXTEND A MINIMUM OF 8" ON THE INSIDE OF OPENINGS. ATTACH TO STRUCTURAL STEEL AT HEAD, SILL AND JAMB. FOR WATERSHEDDING ASSURANCE FOLLOW SMACNA AND NRCA GUIDANCE FOR APPROPRIATE LAPPING OF FLASHING.
3. PROVIDE COMPRESSIBLE BACKING TO MATCH PANEL PROFILE IN LOCATIONS WHERE EXISTING PANELING REMOVED FOR OPENINGS (TYPICAL). REMOVE BURRS AND TREAT CUT EDGES OF PANELING TO REMAIN FOR CORROSION RESISTANCE.
4. DOUBLE-HUNG ALUMINUM WINDOW. SEE SHEET A-603 FOR DETAILS AND SPECIFICATIONS SECTION X FOR ADDITIONAL REQUIREMENTS.
5. NEW WINDOW GUARDS SHALL BE FABRICATED TO MATCH EXISTING. EXISTING WINDOW GUARDS SHALL BE CLEANED AND PAINTED TO MATCH NEW. SEE FINISH SCHEDULE SHEET A-601 FOR COLORS.
6. PROVIDE REINFORCED PRECAST CONCRETE SILL BELOW WINDOWS AS SHOWN.
7. ANGLE SUSPENDED ACOUSTICAL CEILING GRID AND PANELS AS SHOWN.
8. PROVIDE AIR BARRIER AND INSULATION AT PERIMETER OF WINDOWS.

GRAPHIC SCALE

1/2" = 1'-0" 0 1' 2' 4'

APPR	DATE	DESCRIPTION	SYM

SEAL

A/E INFO

APPROVED
FOR RALPH DEAL 3/23/15
FOR COMMANDER NAVFAC

ACTIVITY
SATISFACTORY TO DATE 3-23-15

DES	RMR	DRW	RMR	CHK	SWC

<<PM/DM>> R. M. RUSSELL
BRANCH MANAGER
ENGR DIRECTOR Ralph D. Deal
CUSTOMER

DEPARTMENT OF THE NAVY
NAVAL FACILITIES ENGINEERING COMMAND
PWD PORTSMOUTH
NAVAL FACILITIES ENGINEERING COMMAND ~ MID ATLANTIC
NORFOLK NAVAL SHIPYARD ~ PORTSMOUTH, VIRGINIA
NORFOLK NAVAL SHIPYARD
PORTSMOUTH, VIRGINIA

B260 EXTENSIVE REPAIRS

ARCHITECTURAL INTERIOR DETAILS

SCALE: AS NOTED
EPROJECT NO.: 1146716
CONSTR. CONTR. NO. N40085-15-R-0018
NAVFAC DRAWING NO. 12682007
SHEET 53 OF 118

A-502

DRAWFORM REVISION: 10 MARCH 2009

FILE NAME: P:\VA\NNSY\Buildings\0260\2011_1146716_Nuclear Materials Whse Repairs\B_Design\Drawings\B0260-1146716-A-502.dwg LAYOUT NAME: A-502 PLOTTED: Tuesday, March 17, 2015 - 11:04am USER: renee.russell

FINISH SCHEDULE

ROOM #	ROOM NAME	FLOOR		BASE		WALL		CEILING			REMARKS
		MATERIAL	COLOR	MATERIAL	COLOR	MATERIAL	COLOR	MATERIAL	COLOR	HEIGHT	
101	LOBBY 1	RECESSED MAT	STAINLESS STEEL	RB-2		INT-COMPOSITE, EXT GWB		SUSP ACOUSTICAL	WHITE	8'-6"	
102	WAREHOUSE - HIGH BAY	POLISHED CONCRETE	WHITE CEMENT	6" HIGH PLASTIC WOOD AT NEW EXTERIOR WALLS	PNT-2	INT-COMPOSITE, EXT GWB	SEE ROOM FINISH COLOR KEY	SUSPENDED CEMENT FIBER BOARD	WHITE	8'-6"	BELOW INT. LOW BAY CLG, SEE SHEET A-102
102	WAREHOUSE - LOW BAYS	POLISHED CONCRETE	WHITE CEMENT	6" HIGH PLASTIC WOOD AT NEW EXTERIOR WALLS	PNT-2	INT-COMPOSITE, EXT GWB	SEE ROOM FINISH COLOR KEY	SUSPENDED CEMENT FIBER BOARD	WHITE	17'- 0" HIGH CLG / 9'-4" AT MANSARD SOFFIT	SUSP GWB BELOW INT. LOW BAY CLG, SEE SHEET A-102
103	OFFICE	CARPET TILE ON STD. CONC.	CT-1	6" HIGH RESILIENT BASE	PNT-5	INT-COMPOSITE, EXT GWB	SEE ROOM FINISH COLOR KEY	SUSP ACOUSTICAL	WHITE	8'-6"	BASE AT INT. WALLS ONLY
104	LOCKER ROOM	VINYL COMPOSITION TILE ON STD. CONC.	VCT-1	SEE WALL TYPE	PNT-5	INT-COMPOSITE, EXT GWB	SEE ROOM FINISH COLOR KEY	SUSP ACOUSTICAL	WHITE	8'-6"	
105	CLEAN AREA	POLISHED CONCRETE	WHITE CEMENT	6" HIGH PLASTIC WOOD		INT-COMPOSITE, EXT GWB	SEE ROOM FINISH COLOR KEY	OPEN TO UNDERSIDE OF DECK	WHITE		
106	WELDING AREA	POLISHED CONCRETE	WHITE CEMENT	6" HIGH PLASTIC WOOD		INT-COMPOSITE, EXT GWB	SEE ROOM FINISH COLOR KEY	OPEN TO UNDERSIDE OF DECK	WHITE		
107	ELECTRICAL ROOM	POLISHED CONCRETE	WHITE CEMENT	6" HIGH PLASTIC WOOD		INT-COMPOSITE, EXT GWB	SEE ROOM FINISH COLOR KEY	OPEN TO UNDERSIDE OF DECK	WHITE		
108	FIRE PUMP ROOM	POLISHED CONCRETE	WHITE CEMENT	6" HIGH PLASTIC WOOD		INT-COMPOSITE, EXT GWB	SEE ROOM FINISH COLOR KEY	OPEN TO UNDERSIDE OF DECK	WHITE		
109	MEN'S TOILET	RESINOUS FLR ON STD. CONC.	R-1	6" HIGH COVED EPOXY MATRIX	DARK GRAY	TILE/GWB		SUSP ACOUSTICAL	WHITE	8'-6"	
110	WOMEN'S TOILET	RESINOUS FLR ON STD. CONC.	R-1	6" HIGH COVED EPOXY MATRIX	DARK GRAY	TILE/GWB		SUSP ACOUSTICAL	WHITE	8'-6"	
111	BREAK AREA	VINYL COMPOSITION TILE ON STD. CONC.	R-1	6" HIGH RESILIENT BASE	DARK GRAY	INT-COMPOSITE, EXT GWB	SEE ROOM FINISH COLOR KEY	SUSP ACOUSTICAL	WHITE		
112	JANITOR'S CLOSET	RESINOUS FLR ON STD. CONC.	R-1	6" HIGH COVED EPOXY MATRIX	DARK GRAY	GYPSUM WALLBOARD		OPEN TO UNDERSIDE OF DECK		8'6"	
113	LOBBY 2	RECESSED MAT ON STD. CONC.	STAINLESS STEEL	6" HIGH COVED EPOXY MATRIX		INT-COMPOSITE, EXT GWB	SEE ROOM FINISH COLOR KEY	SUSP ACOUSTICAL	WHITE		

ROOM NOTES:
1. MATERIALS FOR INTERIOR CONSTRUCTION SHALL BE A COMBINATION OF MATERIALS.

2. SEE ROOM FINISH COLOR KEY THIS SHEET FOR MATERIAL INFORMATION.

2. LOW BAY AND HIGH BAY AREAS TYPICALLY HAVE DIFFERENT FINISHES. SEE SPECIFIC NOTES.

FLOOR NOTES:
1. MATERIALS FOR FLOORS ARE A COMBINATION OF SURFACING AND TYPE OF CONCRETE. SEE FOUNDATION PLANS S-101 AND 102 FOR CONCRETE OVERLAY REQUIREMENTS.

2. REFER TO SPECIFICATIONS SECTIONS 03 15 00.00 10 (CONC) 09 29 00 (GWB), 09 30 00 (TILE), 09 65 00 (VCT), 09 67 23.13 (RESIN), AND 09 68 00 (CARPET) FOR ADDITIONAL FLOORING REQUIREMENTS.

BASE NOTES:
1. EXISTING CONCRETE COLUMN BASES SHALL REMAIN AND PAINTED.

2. AT EXTERIOR WALLS, PROVIDE PLASTIC WOOD PER WALL SECTION E, DETAIL A5/A-301.

WALL NOTES:
1. MATERIALS FOR WALL ARE A COMBINATION. SEE WALL SECTIONS SHEET A-302.

2. "PAINT" IN ROOM FINISH COLOR KEY SCHEDULE IS INTENDED TO CLARIFY COLOR CONSISTENT WITH TM5-807-7, COLOR FOR BUILDINGS.

CEILING NOTES:
1. MATERIALS FOR CEILING ARE A COMBINATION. SEE ARCHITECTURAL NEW WORK SECTION B1/A-202 AND REFLECTED CEILING PLAN SHEET A-102.

GENERAL NOTES:
1. FOR DOOR FINISHES, ACCESSORIES, AND HARDWARE SEE SHEET A-602.

2. FOR WINDOW FINISHES, ACCESSORIES, AND GLAZING SEE SHEET A-603.

ROOM FINISH COLOR KEY

FINISH	KEY	MANUFACTURER	STYLE	COLOR	REMARKS
FLOOR					
RESINOUS FLOORING	R-1	KEY RESIIN		DARK GRAY	
POLISHED CONCRETE	C-1	N/A		WHITE	
VINYL COMPOSITION TILE	VCT-1	ARMSTRONG	CHROMASPIN	AQUATINT	12" X 12"
CARPET TILE	CPT-1	MOHAWK	HEAT TILE	COOL GRAY	24" X 24"
RECESSED MAT	RM-1		SEE SPEC SECT 05 41 13.30		
BASE					
6" HIGH, COVED, RESINOUS	R-1	KEY RESIN		TO MATCH FLOOR	COVED BASE
EXPOSED CONCRETE PIERS	EC-1			MATCH ADJACENT WALLS	OFFICE, LOCKER ROOM
6" HIGH RESILIENT BASE - STRAIGHT	RB-1	ARMSTRONG	6" HIGH, 1/8" THICK	DEEP SEA BLUE	
6" HIGH RESILIENT BASE - COVED	RB-2	ARMSTRONG	6" HIGH, 1/8" THICK	DEEP SEA BLUE	
6" PLASTIC LUMBER BASEBOARD	PL-1	TREX	ENHANCE	CLAM SHELL	
WALL					
GLAZED CONCRETE MASONRY UNITS	GCMU-1	TRENWYTH ASTRA-GLAZE-SW+	COVED BASE, BULLNOSE AT OUTER CORNERS	PNT-2	BASE WALL FROM FLOOR TO 40" AFF
GLAZED CONCRETE MASONRY UNITS	GCMU-2	TRENWYTH ASTRA-GLAZE-SW+	WATERFALL EDGE, BULLNOSE AT OUTER CORNERS	PNT-3	TOP OF INTERIOR BASE WALL
GYPSUM WALLBOARD (GWB)	GWB-1	FOR PERIMETER AND COMPOSITE WALLS	SEE SPEC SECT 09 29 10.30	PNT-1	FROM TOP OF BASE WALL TO UNDERSIDE OF DECK
CERAMIC TILE	CT-1	DALTILE	CHECKERBOARD PATTERN	PNT-4/PNT-5	GROUT - SILVER
PAIINT	PNT-1	BENJAMIN MOORE	ICY BLUE 2057-70	MAIN COLOR	EXP COLS FROM 42" TO CLG
PAINT	PNT-2	BENJAMIN MOORE	WATERTOWN 818	HIGHLIGHT-DARK	EXP COLS FROM FLR TO 40"
PAINT	PNT-3	BENJAMIN MOORE	WINDMILL WINGS 2067-60	HIGHLIGHT-LIGHT	EXP COLS FROM 40" - 42"
PAINT	PNT-4	BENJAMIN MOORE	SILVER MARLIN 2139-50	ACCENT-LIGHT	
PAINT	PNT-5	BENJAMIN MOORE	DIOR GRAY 2033-40	ACCENT-DARK	
PAINT	PNT-6	BENJAMIN MOORE	YELLOW RAIN COAT 2020-40	SAFETY	
CEILING					
CEMENT/WOOD FIBER PLANKS	ACST-1	TECTUM ACOUSTIC WALL PANEL	1" THICK, BEVELED EDGES	WHITE FACTORY FINISH	
ACOUSTICAL CEILING SUSPENSION SYSTEM	ACST-2	ARMSTRONG	PRELUCE XL	WHITE FACTORY FINISH	INTERIOR WINDOW
ACOUSTIC PANELS	ACST-3	ARMSTRONG	FINE FISSURED, SQUARE LAY-IN 24" X 24" (NOM)	WHITE	DONN
GYPSUM WALLBOARD	ACST-4	N/A	TYPE X, MOISTURE RESISTANT, IMPACT RESISTANT	WHITE	SEE ROOM FINISH KEY - WALL

ROOM FINISH COLOR KEY - CONTINUED

FINISH	KEY	MANUFACTURER	STYLE	COLOR	REMARKS
MISCELLANOUS					
SIGNAGE - EXTERIOR; MESSAGE	MATCH SIDING				
SIGNAGE - EXTERIOR; BACKGROUND	BLACK				
SIGNAGE - INTERIOR; MESSAGE	PNT-3				ROOM NAME + NUM; WALL MTD ADJ DOOR AT 48"AFF
SIGNAGE - INTERIOR; BACKGROUND	PNT-2				ROOM NAME + NUM; WALL MTD ADJ DOOR AT 48"AFF
WINDOW SCREENS	PNT-1	N/A			
SECURITY SCREENS FOR END WALL OF LOW BAYS - FABRIC AND STRUCTURAL FRAMING	PNT-3	MCNICHOLS	M-2 (REGULAR) OR M-5 (SQUARE WITH INSERTS)	PNT-3; POWDER COATED	PROVIDE HOOK STRIP, WELD TO FRAME AT PERIMETER OF EACH FABRIC PANEL
WOOD CASINGS FOR INTERIOR DOORS	-	N/A	WHITE OAK WITH CLEAR FINISH		
EXTERIOR CANOPY AT LOBBIES	MATCH SIDING	N/A			
INTERIOR ROOFING		PETERSON			
LOUVERS	EXT - MATCH SIDING/INT - MATCH WALL COLOR				
FLASHINGS	FL-1	N/A	DETAILS PER SMACNA	STAINLESS STEEL	
INTERIOR BOLLARDS	PNT-6				
LADDERS	PNT-6				
TOILET PARTITIONS	PNT-5				
CORNER GUARDS	1" RADIUS BULLNOSE	N/A			
CASEWORK - OFFICE	WHITE OAK W/ CLEAR FINISH	N/A			
CASEWORK - BREAK ROOM	WHITE OAK W/ CLEAR FINISH	N/A			
WALL SWITCH PLATES	WS-1	N/A	STAINLESS STEEL	SMOOTH	TYPE 304, SS SCREWS
EXPOSED STRUCTURAL STEEL	PNT-2 FROM FLOOR TO 40" PNT-3 FROM 40" - 42" AFF PNT-1 FROM 42" AFF TO CLG	SEE ROOM COLOR KEY			
VERTICAL BLINDS	VB-1				
LADDERS	PNT-6	N/A			
WINDOW SILLS & JAMBS	SOLID SURFACE	CORIAN	BULLNOSE AT FACE	AS SELECTED BY ARCHITECT	
INTERIOR (MANSARD) ROOFS	GALVALUME	PAC CLAD	24 GAGE	LIGHT GRAY	
WINDOW GUARDS	PNT-3			PNT-3, POWDER COATED	ACCESS OPNG TO MATCH EXISTING

NOTE: WHERE COLOR IS SHOWN AS BEING SPECIFIC TO ONE MANUFACTURER, AN EQUIVALENT COLOR BY ANOTHER MANUFACTURER MAY BE SUBMITTED FOR APPROVAL. MANUFACTURERS AND MATERIALS SPECIFIED ARE NOT INTENDED TO LIMIT THE SELECTION OF EQUAL COLORS FROM OTHER MANUFACTURERS. THE WORD "COLOR" AS USED HEREIN INCLUDES SURFACE COLOR AND PATTERN.

APPR | DATE | DESCRIPTION | SYM

NAVFAC

SEAL

A/E INFO

APPROVED
CHRISTOPHER BEAL FOR RALPH BEAL 3/23/15
FOR COMMANDER NAVFAC

ACTIVITY
SATISFACTORY TO [signature] DATE 3-24-15

DES: RMR | DRW: RMR | CHK: SWC
<<PM/EM>>: R. M. RUSSELL
BRANCH MANAGER [signature]
ENGR DIRECTOR Ralph D. Deal
CUSTOMER [signature]

DEPARTMENT OF THE NAVY
NAVAL FACILITIES ENGINEERING COMMAND
PWD PORTSMOUTH

NAVAL FACILITIES ENGINEERING COMMAND - MID ATLANTIC
NORFOLK NAVAL SHIPYARD - PORTSMOUTH, VIRGINIA

NORFOLK NAVAL SHIPYARD
PORTSMOUTH, VIRGINIA

B260 EXTENSIVE REPAIRS

FINISH SCHEDULES;

SCALE: AS NOTED
EPROJECT NO.: 1146716
CONSTR. CONTR. NO. N40085-15-R-0018
NAVFAC DRAWING NO. 12682008
SHEET 54 OF 118

A-601

DRAWFORM REVISION: 10 MARCH 2009

FILE NAME: P:\VA\VNSY\Buildings\0260\2011_1146716_Nuclear Materials Whse Repairs\B_Design\Drawings\BLDG260-1146716-A-601.dwg LAYOUT NAME: A-601 PLOTTED: Monday, March 23, 2015 - 3:31pm USER: renee.russell

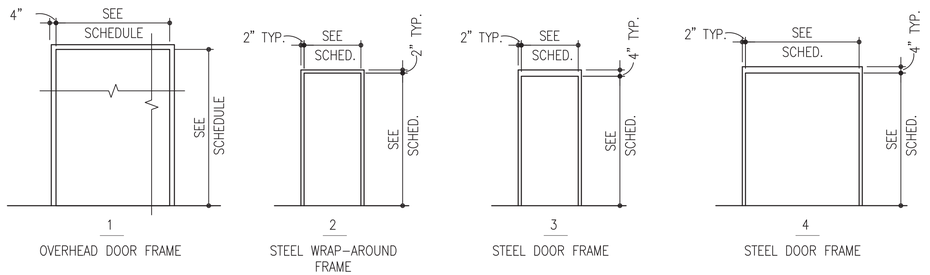

1 OVERHEAD DOOR FRAME

2 STEEL WRAP-AROUND FRAME

3 STEEL DOOR FRAME

4 STEEL DOOR FRAME

FRAME TYPES

SCALE: 1/4" = 1'-0"

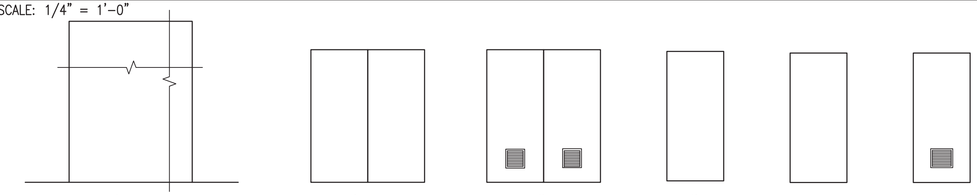

A OVERHEAD DOOR

B STEEL FLUSH DOORS

C STEEL FLUSH DOORS WITH 12" SQ. LOUVERS

D STEEL FLUSH DOOR

E WOOD FLUSH DOOR

F WOOD FLUSH DOOR, WITH LOUVER

DOOR TYPES

SCALE: 1/4" = 1'-0"

IN ACCORDANCE WITH WOOD DOOR MANUFACTURERS ASSOCIATION WDMA I.S.1A, ARCHITECTURAL WOOD FLUSH DOORS, CONTRACTOR SHALL COMPLY WITH THE FOLLOWING:

1. PERFORMANCE: EXTRA HEAVY DUTY.
2. DESCRIPTION: WOOD VENEER FIRE RESISTANT COMPOSITE DOOR.
3. HARDWARE BLOCKING: HB-8
4. GRADE: CUSTOM
5. FACE VENEER MATCHING: BOOK MATCH
6. FACTORY FINISHING: TR-1 NITROCELLULOSE LACQUER

D5 GENERAL WOOD DOOR NOTES

SCALE: NONE A-602

DOOR SCHEDULE NOTES:

1. REPAIR AND PAINT FRAME.
2. REPAIR TO NEW CONDITION OR REPLACE CURTAIN, WEATHERSTRIPPING, SHOE REVERSING BAR, WINDLOCKS, MOTORS, ACCESSORIES AS REQUIRED TO PROVIDE COMPLETELY FUNCTIONING ASSEMBLY.
3. PROVIDE THERMAL INSULATION FOR EXTERIOR PERSONNEL DOORS.
4. PROVIDE ACOUSTICAL INSULATION FOR INTERIOR PERSONNEL DOORS.
5. OPENING CASED, 2 SIDES, MILLWORK TO MATCH DOOR WOOD.
6. 45-MINUTE FIRE-RATED ASSEMBLY.
7. WOOD DOORS SHALL BE OF SELECT RED BIRCH (HEARTWOOD).

DOOR SCHEDULE

DOOR NUMBER	FROM	TO	DOOR				FRAME		NOTES
			SIZE	MATERIAL	TYPE	DESCRIPTION	MATERIAL	TYPE	
001	EXTERIOR	WAREHOUSE	16'-0" X 22'-0" X ?	STEEL CURTAIN	A	OVERHEAD, PENDANT OPER.	EXISTING	2	1, 2
002	EXTERIOR	LOBBY 1	3'-0" x 7'-0" x 1-3/4"	HOLLOW METAL	B	EXTERIOR, PERSONNEL	STEEL	3	
003	LOBBY 1	WAREHOUSE	3'-0" x 7'-0" x 1-3/4"	HOLLOW METAL	B	INTERIOR, PERSONNEL	STEEL	4	
004	WAREHOUSE	OFFICE	3'-0" x 7'-0" x 1-3/4"	SOLID WOOD	E	INTERIOR, PERSONNEL	STEEL	5	5, 6, 7
005	OFFICE	WAREHOUSE	3'-0" x 7'-0" x 1-3/4"	SOLID WOOD	E	INTERIOR, PERSONNEL	STEEL	5	5, 6, 7
006	LOCKER ROOM	WAREHOUSE	3'-0" x 7'-0" x 1-3/4"	SOLID WOOD	E	INTERIOR, PERSONNEL	STEEL	5	5, 6, 7
007	OFFICE	LOCKER ROOM	16'-0" X 22'-0" X ?	SOLID WOOD	E	INTERIOR, PERSONNEL	STEEL	5	5, 6, 7
008	LOCKER ROOM	WAREHOUSE	3'-0" x 7'-0" x 1-3/4"	SOLID WOOD	E	INTERIOR, PERSONNEL	STEEL	5	5, 6, 7
009	WELDING AREA	WAREHOUSE	12'-0" x 12'-0" x ?"	STEEL CURTAIN	A	OVERHEAD, PENDANT OPER.	EXISTING	3	6
010	WELDING AREA	WAREHOUSE	3'-0" x 7'-0" x 1-3/4"	HOLLOW METAL	D	INTERIOR, PERSONNEL	STEEL	X	6
011	EXTERIOR	ELECTRIC ROOM	(2) 3'-0" x 7'-0" x 1-3/4"	HOLLOW METAL	C	EXTERIOR, PERSONNEL, PAIR	STEEL	3	
012	EXTERIOR	FIRE PUMP ROOM	(2) 3'-0" x 7'-0" x 1-3/4"	HOLLOW METAL	B	EXTERIOR, PERSONNEL, PAIR	STEEL	3	
013	EXTERIOR	LOBBY 2	3'-0" x 7'-0" x 1-3/4"	HOLLOW METAL	D	EXTERIOR, PERSONNEL	STEEL	3	
014	LOBBY 2	WAREHOUSE	3'-0" x 7'-0" x 1-3/4"	HOLLOW METAL	D	INTERIOR, PERSONNEL	STEEL	4	
015	EXTERIOR	WAREHOUSE	16'-0" X 22'-0" X ?	STEEL CURTAIN	A	OVERHEAD, PENDANT OPER.	EXISTING	2	6
016	WAREHOUSE	CLEAN AREA	10'-0" X 10'-0" X ?"	STEEL CURTAIN	A	OVERHEAD, PENDANT OPER.	STEEL	X	6
017	WAREHOUSE	CLEAN AREA	3'-0" x 7'-0" x 1-3/4"	HOLLOW METAL	D	INTERIOR, PERSONNEL	STEEL	4	6
018	JANITOR CLOSET	WAREHOUSE	3'-0" x 7'-0" x 1-3/4"	HOLLOW METAL	F	INTERIOR, PERSONNEL	STEEL	4	6
019	JANITOR CLOSET	BREAK AREA	3'-0" x 7'-0" x 1-3/4"	SOLID WOOD	F	INTERIOR, PERSONNEL	STEEL	5	5, 6, 7
020	WOMEN'S TOILET	WAREHOUSE	3'-0" x 7'-0" x 1-3/4"	SOLID WOOD	F	INTERIOR, PERSONNEL	STEEL	5	5, 6, 7
021	MEN'S TOILET	WAREHOUSE	3'-0" x 7'-0" x 1-3/4"	SOLID WOOD	F	INTERIOR, PERSONNEL	STEEL	5	5, 6, 7
022	BREAK AREA	WAREHOUSE	(2) 3'-0" x 7'-0" x 1-3/4"	ALUMINUM	SEE DETAIL B3/A-201	STOREFRONT	ALUMINUM	SEE DETAIL B3/A-201	6

APPR | DATE | DESCRIPTION | SYM

NAVFAC

SEAL

A/E INFO

APPROVED
FOR RALPH DEAL 3/23/15
FOR COMMANDER NAVFAC

ACTIVITY
SATISFACTORY TO DATE 3-23-15

DES	RMR	DRW	RMR	CHK	SWC

<<PM/DM>> R. M. RUSSELL
BRANCH MANAGER
ENGR DIRECTOR Ralph D. Deal
CUSTOMER

DEPARTMENT OF THE NAVY
NAVAL FACILITIES ENGINEERING COMMAND
PWD PORTSMOUTH
NAVAL FACILITIES ENGINEERING COMMAND ~ MID ATLANTIC
NORFOLK NAVAL SHIPYARD - PORTSMOUTH, VIRGINIA
NORFOLK NAVAL SHIPYARD
PORTSMOUTH, VIRGINIA

B260 EXTENSIVE REPAIRS

SCHEDULES; DOOR, WINDOW

SCALE: AS NOTED
EPROJECT NO.: 1146716
CONSTR. CONTR. NO.: N40085-15-R-0018
NAVFAC DRAWING NO.: 12682009
SHEET 55 OF 118

A-602

DRAWFORM REVISION: 10 MARCH 2009

FILE NAME: P:\VA\NNSY\Buildings\V260\2011_1146716_Nuclear Materials Wise Repairs\B_Design\Drawings\BUS260-1146716-A-602.dwg LAYOUT NAME: A-602 PLOTTED: Monday, March 23, 2015 - 3:34pm USER: renee.russell

WINDOW SCHEDULE

FINISH	KEY	MANUFACTURER	STYLE	COLOR	REMARKS
WINDOWS, EXTERIOR WALL	WIN–1	N/A	ALUMINUM	DARK BRONZE ANODIZED FRAME	CLERESTORY WINDOWS
WINDOWS, EXTERIOR WALL	WIN–2	N/A	ALUMINUM	DARK BRONZE ANODIZED FRAME	EXISTNG, RELOCATED
WINDOWS, INTERIOR WALL	WIN–3	N/A	ALUMINUM	WHITE POWDER–COATED FRAME	INTERIOR WINDOW, BREAK ROOM
STOREFRONT	STO–1	KAWNEER	ALUMINUM	DARK BRONZE ANODIZED FRAME	BETWEEN WAREHOUSE AND BREAK AREA

GLAZING SCHEDULE

FINISH	KEY	MANUFACTURER	STYLE	COLOR	REMARKS
WINDOW GLASS – CLERESTORY WINDOWS	GL–1	EXTERIOR LITE – N/A; INTERIOR LITE – PPG	EXTERIOR 1/8" THICK, INTERIOR– 1/4" LAMINATED, SOLARBAN 60	EXTERIOR – CLEAR ANNEALED, INTERIOR – CLEAR	REPLACE FASCIA PANELS ABOVE WINDOWS WITH NEW TO MATCH EXISTING
WINDOW GLASS – EXTERIOR WINDOWS	GL–2	EXTERIOR LITE – N/A; INTERIOR LITE – PPG	EXTERIOR 1/8" THICK, INTERIOR– 1/4" LAMINATED, SOLARBAN 60	EXTERIOR – CLEAR ANNEALED, INTERIOR – CLEAR	EIXISTNG, RELOCATED – GLAZING TO REMAIN; NEW WINDOWS – NEW GLAZING
WINDOW GLASS – INTERIOR WINDOWS	GL–3	N/A	1/4" TEMPERSED	CLEAR	
STOREFRONT GLAZING	GL–4	N/A	1/4" TEMPERED	CLEAR	SIMILAR TO EXISTING IN BREAK ROOM

WINDOW NOTES:
1. EXTERIOR WINDOWS SHALL BE THERMALLY BROKEN
2. SEE DETAILS BELOW.
3. SEE GLAZING SCHEDULE THIS SHEET FOR GLASS PRODUCTS.
4. ANODIZING SHALL BE 7MIL THICKNESS.
5. CLERESTORY WINDOW FRAMES SHALL PROVIDE MINIIMUM BITE OF 5/8" FOR INSULATED GLASS. PROVIDE H–TYPE MUNTINS BETWEEN UNITS

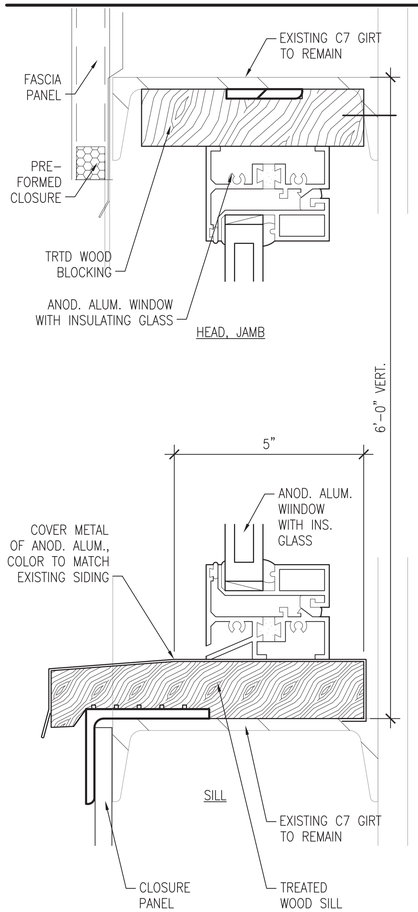

A1 CLERESTORY WINDOW DETAILS
SCALE: 6" = 1'–0" A–302

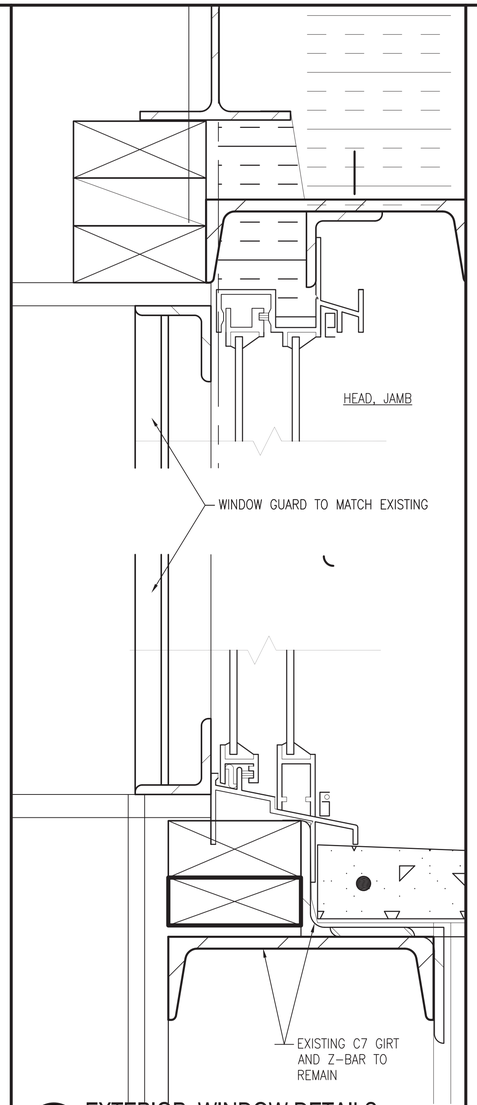

A2 EXTERIOR WINDOW DETAILS
SCALE: 6" = 1'–0" A–302

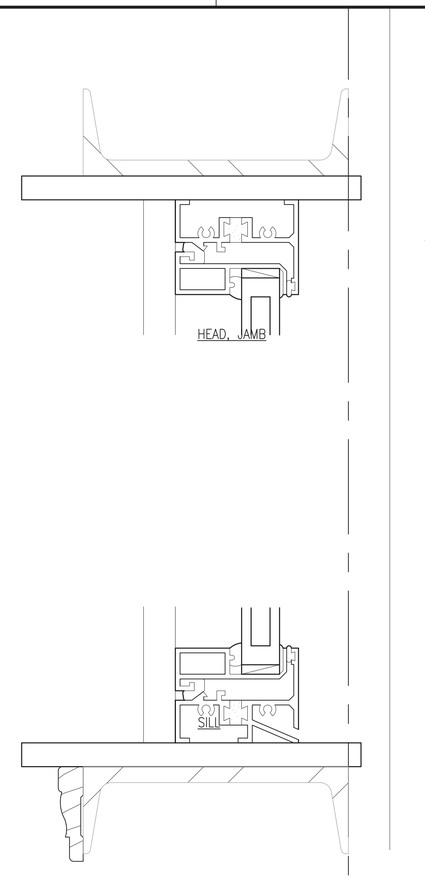

A3 INTERIOR WINDOW DETAILS
SCALE: 6" = 1'–0" A–302

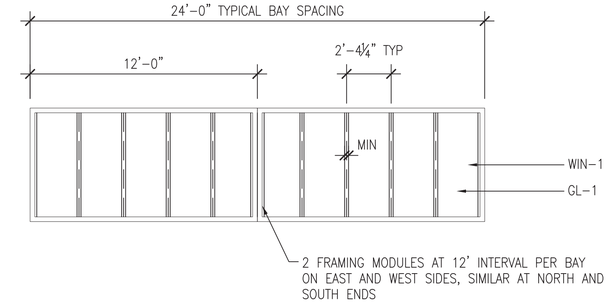

C4 CLERESTORY WINDOWS
SCALE: 1/4" = 1'–0" A–201

NEW WORK NOTES

1. CLERESTORY WINDOWS SHALL BE DESIGNED BY CONTRACTOR AND SEALED ENGINEERING DRAWINGS PROVIDED TO ASSURE STRUCTURAL SUFFICIENCY FOR LOCAL WEATHER CONDITIONS. FRAMING MODULES ARE ASSUMED BETWEEN STRUCTURAL COLUMNS AS INDICATED IN DETAIL C4 ABOVE. PROVIDE GLAZING PER SCHEDULE ABOVE.

2. EXTERIOR DOUBLE–HUNG WINDOWS ON THE GROUND FLOOR SHALL BE PROVIDED TO MATCH EXISTING IN BREAK AREA. PROVIDE SECURITY SCREENS PER ROOM FINISH COLOR KEY SHEET A–601. PROVIDE VERTICAL BLINDS ON INTERIOR OF WINDOW SCREENS. PROVIDE SOLID SURFACE WINDOW STOOLS. PROVIDE WHITE OAK CASINGS WITH CLEAR FINISH.

3. PROVIDE INTERIOR WINDOW AT WALL IN BREAK ROOM WHERE INDICATED.

GRAPHIC SCALE

6" = 1'–0" 0 1" 2" 4"

1/4" = 1'–0" 0 2' 4' 8'

APPR	DATE	DESCRIPTION	SYM

NAVFAC

SEAL

A/E INFO

APPROVED
FOR RALPH DEAL 2/23/15
FOR COMMANDER NAVFAC

ACTIVITY
SATISFACTORY TO DATE 2-23-15

DES	RMR	DRW	RMR	CHK	SWC

<<PM/TM/>> R. M. RUSSELL
BRANCH MANAGER
ENGR DIRECTOR Ralph D. Deal
CUSTOMER

DEPARTMENT OF THE NAVY
NAVAL FACILITIES ENGINEERING COMMAND ~ MID ATLANTIC
NORFOLK NAVAL SHIPYARD – PORTSMOUTH, VIRGINIA
PWD PORTSMOUTH
NAVAL FACILITIES ENGINEERING COMMAND
PORTSMOUTH, VIRGINIA
NORFOLK NAVAL SHIPYARD
B260 EXTENSIVE REPAIRS
WINDOW SCHEDULES, DETAILS

SCALE:	AS NOTED
EPROJECT NO.:	1146716
CONSTR. CONTR. NO.	N40085–15–R–0018
NAVFAC DRAWING NO.	12682010
SHEET	56 OF 118

A-603

DRAWFORM REVISION: 10 MARCH 2009

FILE NAME: P:\VA\VNSY\Buildings\0260\2011_1146716_Nuclear Materials Whse Repairs\B_Design\Drawings\BLDG260–1146716–A–603.dwg LAYOUT NAME: A–603 PLOTTED: Monday, March 23, 2015 – 3:37pm USER: renee.russell

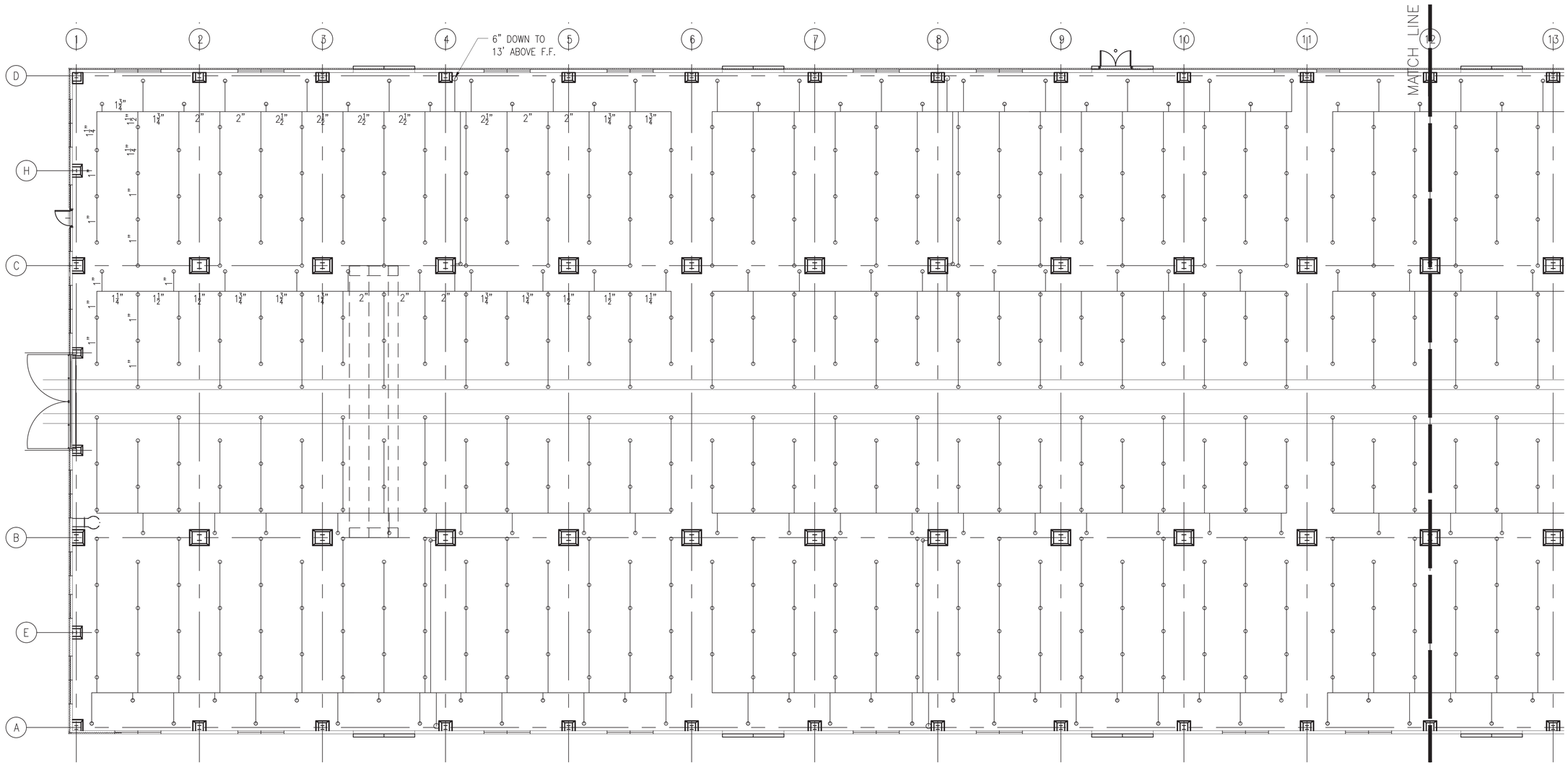

PARTIAL FIRST FLOOR PLAN

SCALE: 3/32" = 1'-0"

PLAN NORTH

GENERAL SHEET NOTES

1. DEMOLISH AND REMOVE ALL EXISTING FIRE SPRINKLER PIPING, SPRINKLERS, FITTINGS AND HANGERS. NO PORTIONS OF THE EXISTING FIRE SPRINKLER SYSTEM SHALL BE REUSED.
2. EXISTING PIPE, FITTINGS AND HANGERS ARE GALVANIZED.
3. CEILING LEVEL SPRINKLER SYSTEMS TERMINATE APPROXIMATELY 13 FEET ABOVE FINISHED FLOOR. THERE ARE NO EXISTING SPRINKLER RISERS, VALVES OR FITTINGS BELOW THE POINT OF TERMINATION ABOVE. THERE ARE NO EXISTING WATERLINES BENEATH THE EXISTING FLOOR SLAB.
4. WHILE DEPICTING THE EXISTING SYSTEM LAYOUT, THE ACTUAL LOCATION AND SIZE OF PIPE MAY VARY SLIGHTLY FROM INDICATED.
5. CONTRACTOR SHALL PROVIDE PROPER DISPOSAL OF ALL DEMOLISHED PIPE, FITTINGS, HANGERS, ETC. PROVIDE LEGAL DISPOSAL (NOT ON GOVERNMENT PROPERTY OR IN GOVERNMENT OWNED/LEASED DUMPSTERS).

KEY PLAN

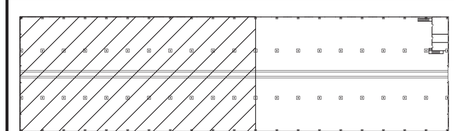

GRAPHIC SCALE

0 8' 16' 24'

SCALE: 3/32" = 1'-0"

APPR	DATE	DESCRIPTION	SYM

NAVFAC

SEAL

A/E INFO

APPROVED
FOR RALPH DEAL 2/23/15
FOR COMMANDER NAVFAC

ACTIVITY

SATISFACTORY TO DATE 3-24-15

DES: DPS	DRW: DPS	CHK: SLW

<<PM/DM>>: R. M. RUSSELL
BRANCH MANAGER: DPS
ENGR DIRECTOR: Ralph D. Deal
CUSTOMER:

DEPARTMENT OF THE NAVY
NAVAL FACILITIES ENGINEERING COMMAND
PWD PORTSMOUTH

NAVAL FACILITIES ENGINEERING COMMAND – MID ATLANTIC
NORFOLK NAVAL SHIPYARD – PORTSMOUTH, VIRGINIA

NORFOLK NAVAL SHIPYARD
PORTSMOUTH, VIRGINIA

B260 EXTENSIVE REPAIRS

FIRE SPRINKLER DEMOLITION PLANS

SCALE:	AS NOTED
EPROJECT NO.:	1146716
CONSTR. CONTR. NO.	N40085-15-R-0018
NAVFAC DRAWING NO.	12682011
SHEET	57 OF 118

FD-101

DRAWFORM REVISION: 10 MARCH 2009

FILE NAME: C:\Users\douglas.stultz\local settings\Temp\AcPublish_8652\BLDG260-1146716-FD-101 102 103 & 104 - 2010.dwg LAYOUT NAME: FD-101 PLOTTED: Monday, March 23, 2015 - 3:43pm USER: douglas.stultz

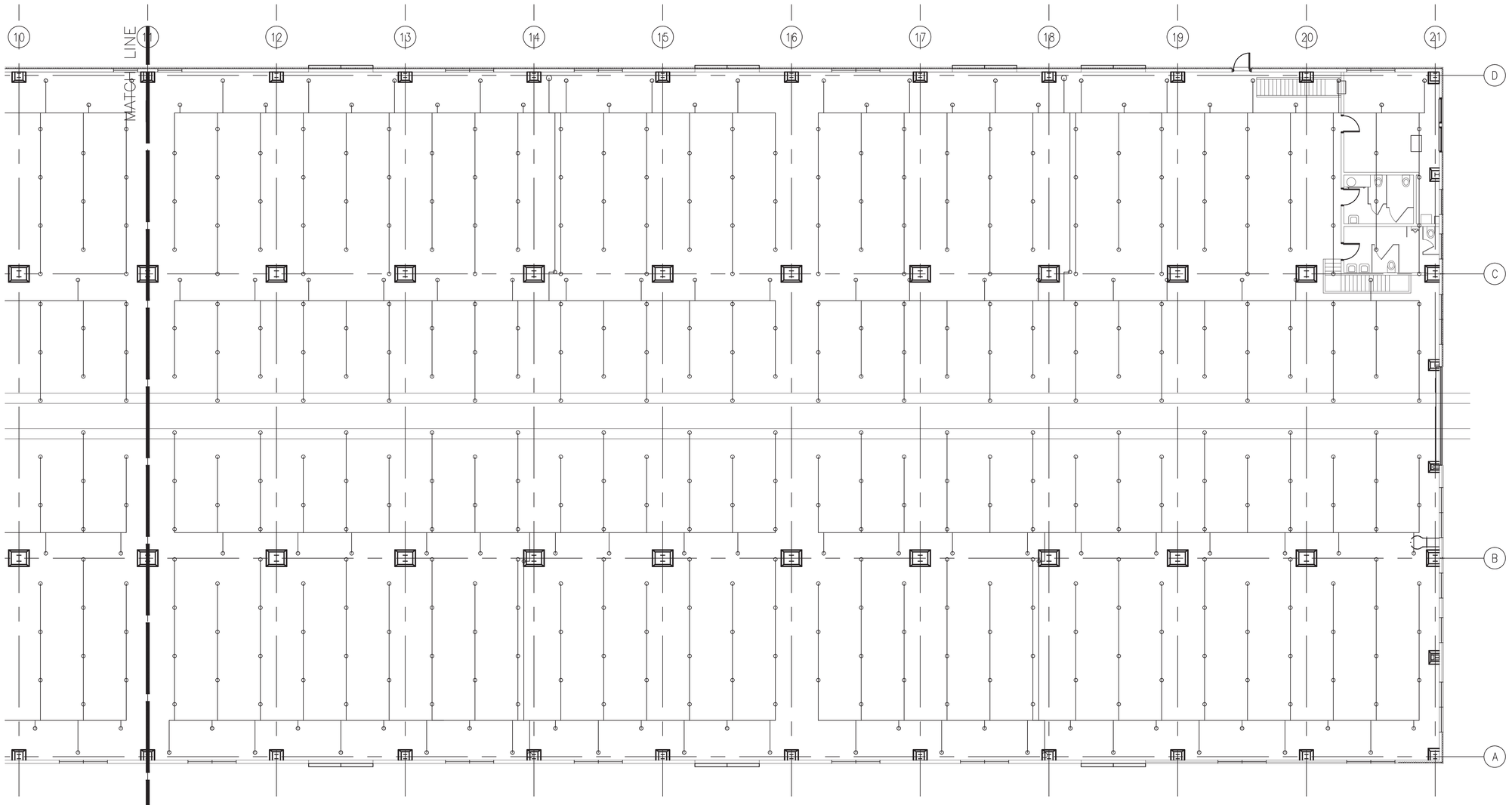

PARTIAL FIRST FLOOR PLAN

SCALE: 3/32" = 1'-0"

PLAN NORTH

GENERAL SHEET NOTES

1. DEMOLISH AND REMOVE ALL EXISTING FIRE SPRINKLER PIPING, SPRINKLERS, FITTINGS AND HANGERS. NO PORTIONS OF THE EXISTING FIRE SPRINKLER SYSTEM SHALL BE REUSED.
2. EXISTING PIPE, FITTINGS AND HANGERS ARE GALVANIZED.
3. CEILING LEVEL SPRINKLER SYSTEMS TERMINATE APPROXIMATELY 13 FEET ABOVE FINISHED FLOOR. THERE ARE NO EXISTING SPRINKLER RISERS, VALVES OR FITTINGS BELOW THE POINT OF TERMINATION ABOVE. THERE ARE NO EXISTING WATERLINES BENEATH THE EXISTING FLOOR SLAB.
4. WHILE DEPICTING THE EXISTING SYSTEM LAYOUT, THE ACTUAL LOCATION AND SIZE OF PIPE MAY VARY SLIGHTLY FROM INDICATED.
5. CONTRACTOR SHALL PROVIDE PROPER DISPOSAL OF ALL DEMOLISHED PIPE, FITTINGS, HANGERS, ETC. PROVIDE LEGAL DISPOSAL (NOT ON GOVERNMENT PROPERTY OR IN GOVERNMENT OWNED/LEASED DUMPSTERS).

KEY PLAN

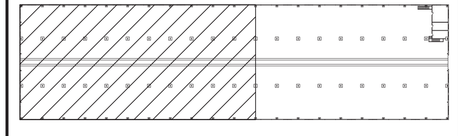

GRAPHIC SCALE

0 8' 16' 24'

SCALE: 3/32" = 1'-0"

NO.	DESCRIPTION	DATE	APPR

NAVFAC

A/E INFO

APPROVED
FOR RALPH DEAL 3/23/15
FOR COMMANDER NAVFAC

ACTIVITY
SATISFACTORY TO DATE 3-24-15

DES DPS | DRW DPS | CHK SLW

<<PM/DM>> R. M. RUSSELL
BRANCH MANAGER DPS
ENGR DIRECTOR Ralph D. Deal
CUSTOMER

DEPARTMENT OF THE NAVY
NAVAL FACILITIES ENGINEERING COMMAND
PWD PORTSMOUTH

NAVAL FACILITIES ENGINEERING COMMAND – MID ATLANTIC
NORFOLK NAVAL SHIPYARD – PORTSMOUTH, VIRGINIA

NORFOLK NAVAL SHIPYARD
PORTSMOUTH, VIRGINIA

B260 EXTENSIVE REPAIRS

FIRE SPRINKLER DEMOLITION PLANS

SCALE: AS NOTED
EPROJECT NO.: 1146716
CONSTR. CONTR. NO.: N40085-15-R-0018
NAVFAC DRAWING NO.: 12682012
SHEET 58 OF 118

FD-102

DRAWFORM REVISION: 10 MARCH 2009

FILE NAME: C:\Users\douglas.stultz\Local Settings\Temp\AcPublish_8652\BLDG260-1146716-FD-101 102 103 & 104 - 2010.dwg LAYOUT NAME: FD-102 PLOTTED: Monday, March 23, 2015 - 3:43pm USER: douglas.stultz

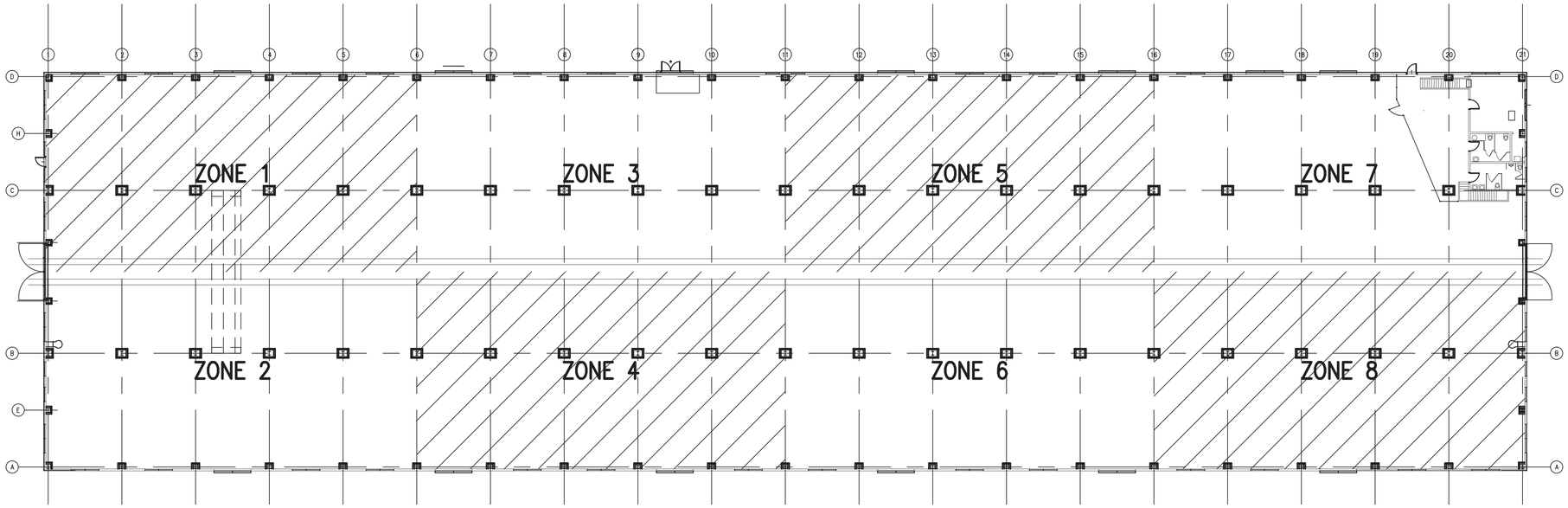

FIRST FLOOR PLAN

SCALE: 3/64" = 1'-0"

PLAN NORTH

GENERAL SHEET NOTES

1. EXISTING FIRE SPRINKLER ZONES

GRAPHIC SCALE

0 16' 32' 48'

SCALE: 3/64" = 1'-0"

APPR	DATE	DESCRIPTION	SYM

NAVFAC

SEAL

A/E INFO

APPROVED
FOR RALPH DEAL 3/23/15
FOR COMMANDER NAVFAC

ACTIVITY
3-24-15
SATISFACTORY TO DATE

DES DPS | DRW DPS | CHK SLW
<<PM/DM>> R. M. RUSSELL
BRANCH MANAGER DPS
ENGR DIRECTOR Ralph D. Deal
CUSTOMER

DEPARTMENT OF THE NAVY
NAVAL FACILITIES ENGINEERING COMMAND
PWD PORTSMOUTH

NAVAL FACILITIES ENGINEERING COMMAND ~ MID ATLANTIC
NORFOLK NAVAL SHIPYARD ~ PORTSMOUTH, VIRGINIA

NORFOLK NAVAL SHIPYARD
PORTSMOUTH, VIRGINIA

B260 EXTENSIVE REPAIRS

FIRE SPRINKLER DEMOLITION PLAN

SCALE: AS NOTED
EPROJECT NO.: 1146716
CONSTR. CONTR. NO. N40085-15-R-0018
NAVFAC DRAWING NO. 12682013
SHEET 59 OF 118

FD-103

DRAWFORM REVISION: 10 MARCH 2009

FILE NAME: C:\Users\douglas.stultz\Local Settings\Temp\AcPublish_8652\BLDG260-1146716-FD-101 102 103 & 104 - 2010.dwg LAYOUT NAME: FD-103 PLOTTED: Monday, March 23, 2015 - 3:43pm USER: douglas.stultz

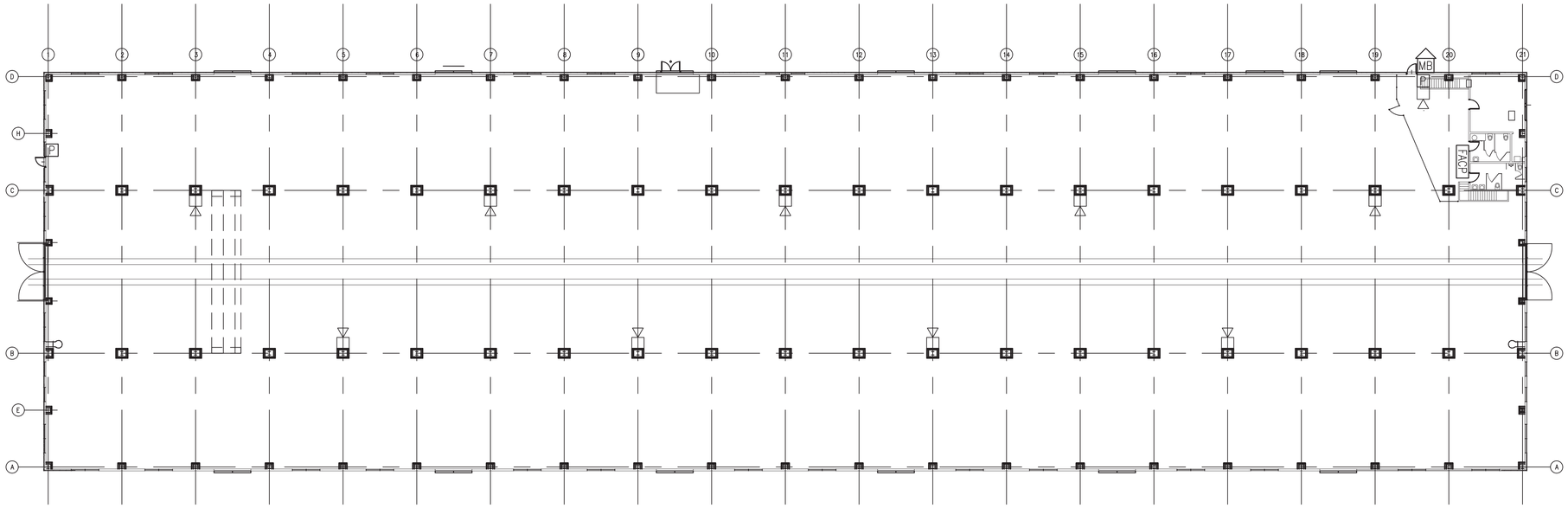

FIRST FLOOR PLAN

SCALE: 3/64" = 1'–0"

PLAN NORTH

GENERAL SHEET NOTES

1. DEMOLISH AND REMOVE ALL EXISTING WIRE ASSOCIATED WITH THE EXISTING BUILDING FIRE ALARM SYSTEM. NO EXISTING WIRE SHALL BE REUSED.
2. CONTRACTOR MAY REUSE EXISTING CONDUIT AND BACK–BOXES PROVIDED EXISTING CONDUIT TO BE REUSED FULLY COMPLIES WITH THE REQUIREMENTS OF THE FIRE ALARM SPECIFICATIONS AND CONDUIT FILL LIMITATIONS OF NFPA 70.
3. CONDUIT AND BACK BOXES NOT REUSED SHALL E DEMOLISHED AND REMOVED
4. CONTRACTOR SHALL PROVIDE PROPER DISPOSAL OF ALL DEVICES, APPLIANCES, FIRE ALARM PANEL, WIRE, CONDUIT, BACK–BOXES, FITTINGS, ETC. PROVIDE LEGAL DISPOSAL (NOT ON GOVERNMENT PROPERTY OR IN GOVERNMENT OWNED/LEASED DUMPSTERS).
5. EXISTING MASTERBOX, MASTERBOX ENCLOSURE AND LIGHT SHALL BE TURNED OVER TO THE BASE FIRE ALARM TECHNICIAN OR THE CONTRACTING OFFICER.

LEGEND

FACP	EXISTING FIRE ALARM CONTROL PANEL
MB	EXISTING MASTERBOX TELEGRAPHIC TRANSMITTER
P	EXISTING MANUAL PULL STATION
	EXISTING WALL/COLUMN MOUNTED HORN–STROBE

GRAPHIC SCALE

0 16' 32' 48'

SCALE: 3/64" = 1'–0"

APPR	DATE	DESCRIPTION	SYM

NAVFAC

SEAL

A/E INFO

APPROVED
for RALPH DEAL 3/23/15
FOR COMMANDER NAVFAC

ACTIVITY

SATISFACTORY TO DATE 3-24-15

DES	DPS	DRW	DPS	CHK	SLW

<<PM/DM>> R. M. RUSSELL
BRANCH MANAGER DPS
ENGR DIRECTOR Ralph D. Deal
CUSTOMER

DEPARTMENT OF THE NAVY
NAVAL FACILITIES ENGINEERING COMMAND
PWD PORTSMOUTH

NAVAL FACILITIES ENGINEERING COMMAND – MID ATLANTIC
NORFOLK NAVAL SHIPYARD – PORTSMOUTH, VIRGINIA

NORFOLK NAVAL SHIPYARD
PORTSMOUTH, VIRGINIA

B260 EXTENSIVE REPAIRS

FIRE ALARM DEMOLITION PLAN

SCALE: AS NOTED
EPROJECT NO.: 1146716
CONSTR. CONTR. NO.: N40085–15–R–0018
NAVFAC DRAWING NO.: 12682014
SHEET 60 OF 118

FD-104

DRAWFORM REVISION: 10 MARCH 2009

FILE NAME: C:\Users\douglas.stultz\Local Settings\Temp\AcPublish_8652\BLOG260-1146716-FD-101 102 103 & 104 - 2010.dwg LAYOUT NAME: FD-104 PLOTTED: Monday, March 23, 2015 - 3:43pm USER: douglas.stultz

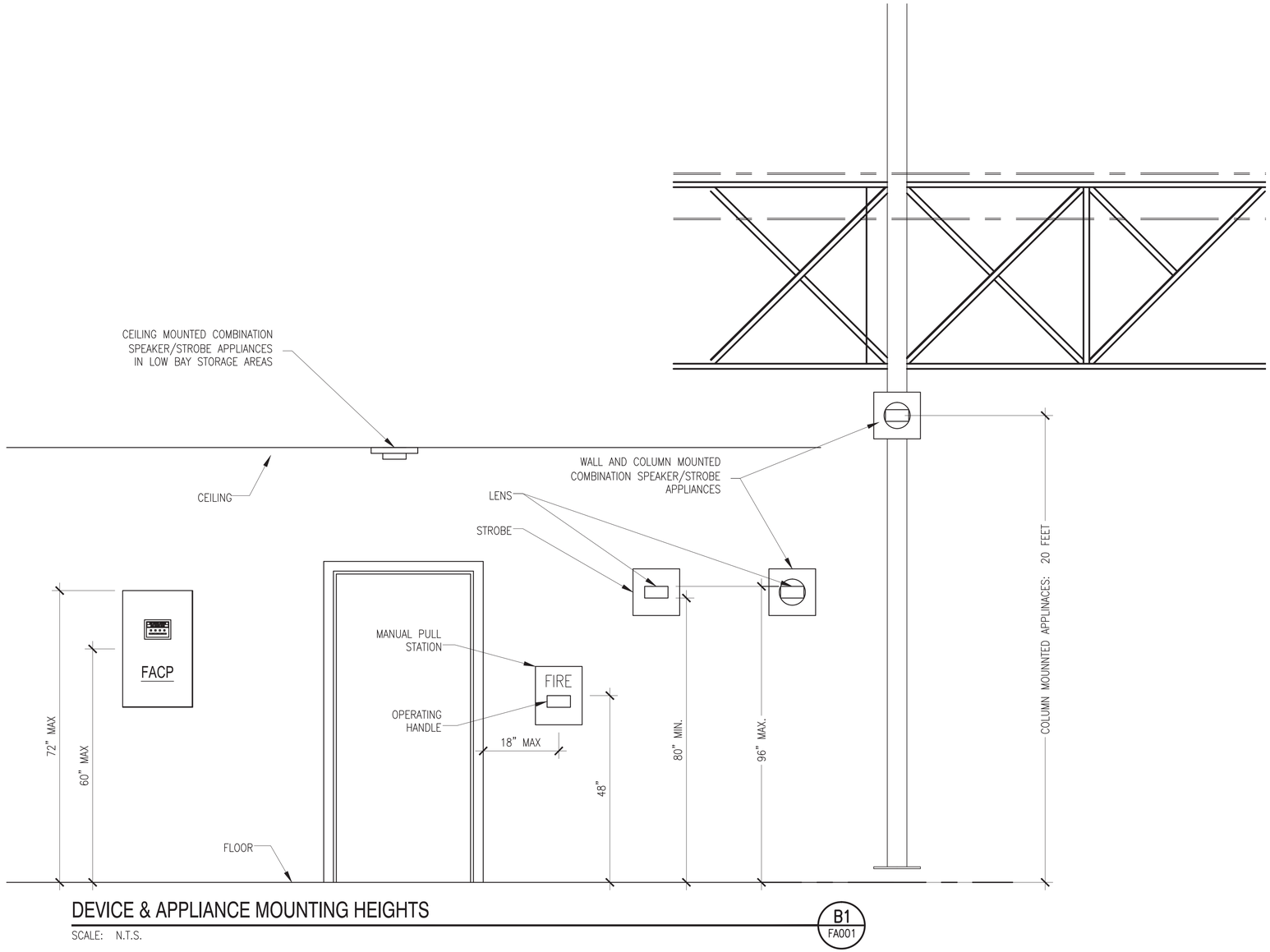

DEVICE & APPLIANCE MOUNTING HEIGHTS

SCALE: N.T.S.

B1
FA001

LEGEND

FACP	FIRE ALARM CONTROL PANEL
DET-16	DET -16 TELEGRAPHIC TRANSMITTER
RA	REMOTE ANNUNCIATOR
IM	INTERFACE MODULE
CM	CONTROL MODULE
FPRUN	FIRE PUMP RUN
FPLOP	FIRE PUMP LOSS OF PHASE
FPPR	FIRE PUMP PHASE REVERSAL
FPCT	FIRE PUMP CONTROLLER TROUBLE CONDITION
P	MANUAL PULL STATION
F	FLOW SWITCH
T	TAMPER SWITCH
LT	PUMP ROOM LOW TEMPERATURE
XX	WALL/COLUMN MOUNTED SPEAKER-STROBE (XX INDICATES CANDELA)
C XX	CEILING MOUNTED SPEAKER-STROBE (XX INDICATES CANDELA)
XX	WALL MOUNTED STROBE (XX INDICATES CANDELA)
	SMOKE DETECTOR
D	DUCT MOUNTED SMOKE DETECTOR
WP	WEATHER-PROOF

APPR | DATE | DESCRIPTION | SYM

NAVFAC

SEAL

A/E INFO

APPROVED
FOR RALPH DEAL 3/23/15
FOR COMMANDER NAVFAC

ACTIVITY
SATISFACTORY TO DATE 3-24-15

DES DPS DRW DPS CHK SLW
<<PM/DM>> R. M. RUSSELL
BRANCH MANAGER DPS
ENGR DIRECTOR Ralph D. Deal
CUSTOMER

DEPARTMENT OF THE NAVY
NAVAL FACILITIES ENGINEERING COMMAND
PWD PORTSMOUTH

NAVAL FACILITIES ENGINEERING COMMAND – MID ATLANTIC
NORFOLK NAVAL SHIPYARD – PORTSMOUTH, VIRGINIA

NORFOLK NAVAL SHIPYARD
PORTSMOUTH, VIRGINIA

B260 EXTENSIVE REPAIRS

FIRE ALARM LEGEND AND DETAIL

SCALE: AS NOTED
EPROJECT NO.: 1146716
CONSTR. CONTR. NO. N40085-15-R-0018
NAVFAC DRAWING NO. 12682015
SHEET 61 OF 118

FA-001

DRAWFORM REVISION: 10 MARCH 2009

FILE NAME: P:\VA\VNSY\Buildings\0260\2011_1146716_Nuclear Materials Whse Repairs\B_Design\Drawings\BLDG260-1146716-FA-001 101 102 501 502 - 2010.dwg LAYOUT NAME: FA-001 PLOTTED: Monday, March 23, 2015 - 3:43pm USER: douglas.stultz

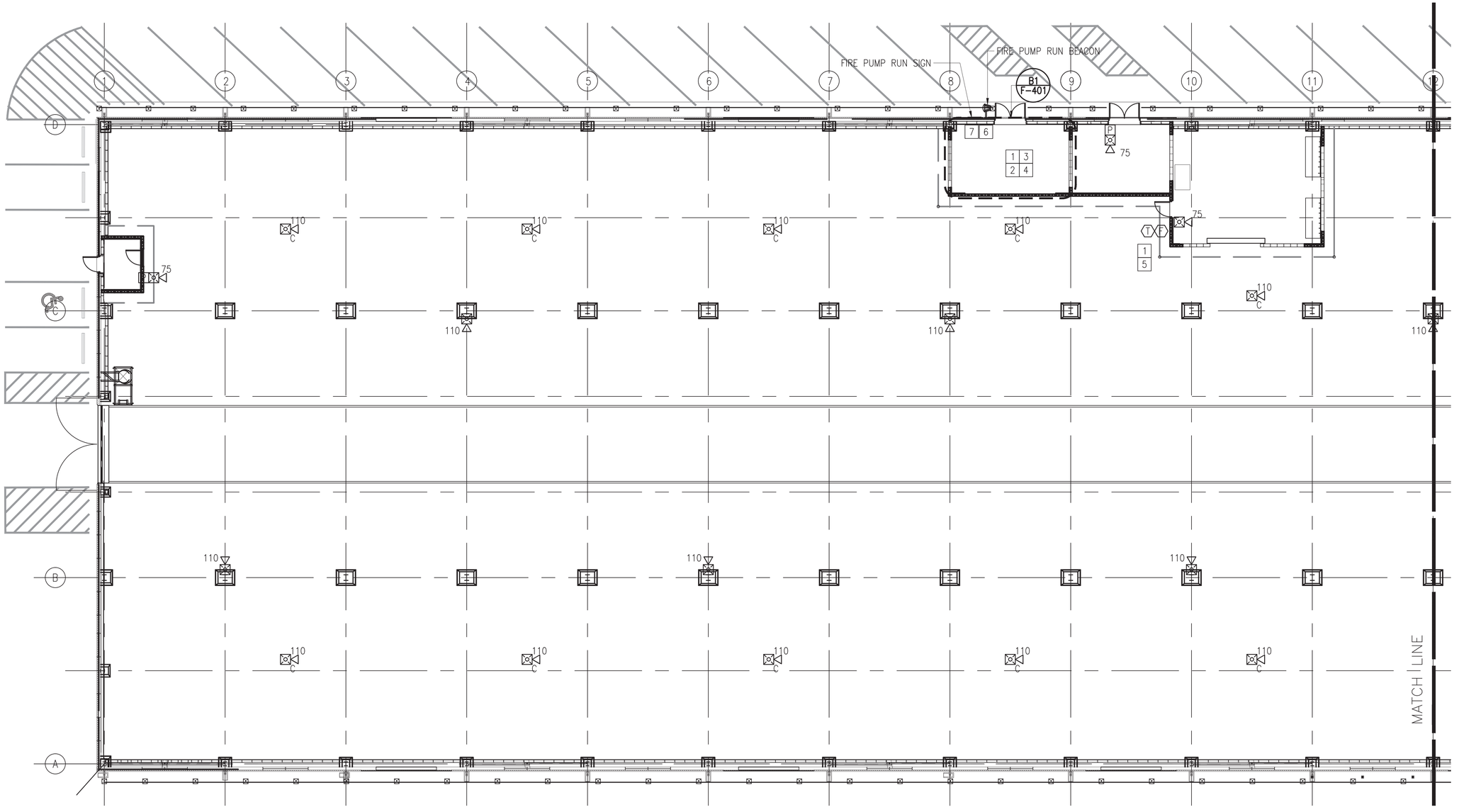

GENERAL SHEET NOTES

1. SEE SHEET FA001 FOR SYMBOLS LEGEND.
2. SEE SHEET FA501 FOR FIRE ALARM MATRIX.
3. SEE SHEET FA502 FOR FIRE ALARM RISER DIAGRAM.
4. SEE SHEET F-401 FOR PANELS, DEVICES AND APPLIANCES LOCATED INSIDE THE FIRE PUMP ROOM
5. THE FIRE PUMP ROOM SHALL BE A CONDITIONED SPACE TO MAINTAIN AN AMBIENT TEMPERATURE BETWEEN 40 AND 120 DEGREES FAHRENHEIT, AT A RELATIVE HUMIDITY OF 75 PERCENT.
6. SEE SHEET FA-501 FOR INTELLIGIBILITY REQUIREMENTS FOR INDIVIDUAL ROOMS/SPACES.

☐ NEW WORK KEYNOTES

1. COORDINATE LOCATIONS OF INTERFACE MODULES ASSOCIATED WITH SPRINKLER SYSTEM FLOW AND TAMPER SWITCHES WITH FIRE SPRINKLER CONTRACTOR
2. PROVIDE INTERFACE MODULES ASSOCIATED WITH THE FIRE PUMP ROOM.
3. EXTEND BASE WIDE TELEGRAPHIC LOOP FROM LOCATION OF EXISTING MASTERBOX TO THE LOCATION OF THE DET-16 TELEGRAPHIC TRANSMITTER LOCATED INSIDE THE FIRE PUMP ROOM.
4. SEE SHEETS F-401, F-402, AND F-403 FOR LOCATIONS OF DEVICES AND APPLIANCES INSIDE THE FIRE PUMP ROOM.
5. FLOW AND TAMPER FOR WELDING AREA 106 SPRINKLER SYSTEM
6. MOUNT FIRE PUMP RUN BEACON A MINIMUM OF 80 INCHES AND A MAXIMUM OF 96 INCHES ABOVE FINISHED GRADE.
7. SEE SHEET F-501 FOR "FIRE PUMP RUN" SIGNAGE REQUIREMENTS.

KEY PLAN

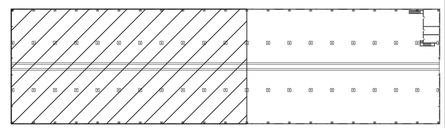

GRAPHIC SCALE

0 8' 16' 24'

SCALE: 3/32" = 1'-0"

APPR | DATE | DESCRIPTION | SYM

NAVFAC

SEAL

A/E INFO

APPROVED
FOR COMMANDER NAVFAC
FOR RALPH DEAL 3/23/15

ACTIVITY
SATISFACTORY TO DATE 3-23-15

DES	DPS	DRW	DPS	CHK	SLW

<<PM/DM>> R. M. RUSSELL
BRANCH MANAGER DPS
ENGR DIRECTOR Ralph D. Deal
CUSTOMER

DEPARTMENT OF THE NAVY
NAVAL FACILITIES ENGINEERING COMMAND
PWD PORTSMOUTH
NAVAL FACILITIES ENGINEERING COMMAND ~ MID ATLANTIC
NORFOLK NAVAL SHIPYARD - PORTSMOUTH, VIRGINIA
NORFOLK NAVAL SHIPYARD
PORTSMOUTH, VIRGINIA

B260 EXTENSIVE REPAIRS

FIRE ALARM PLAN - NEW WORK

SCALE:	AS NOTED
EPROJECT NO.:	1146716
CONSTR. CONTR. NO.	N40085-15-R-0018
NAVFAC DRAWING NO.	12682016
SHEET	62 OF 118

FA-101

DRAWFORM REVISION: 10 MARCH 2009

FILE NAME: P:\VA\NNSY\Buildings\0260\2011_1146716_Nuclear Materials Wise Repairs\B_Design\Drawings\BUD260-1146716-FA-001 101 102 501 502 - 2010.dwg LAYOUT NAME: FA-101 PLOTTED: Monday, March 23, 2015 - 3:43pm USER: douglas.stultz

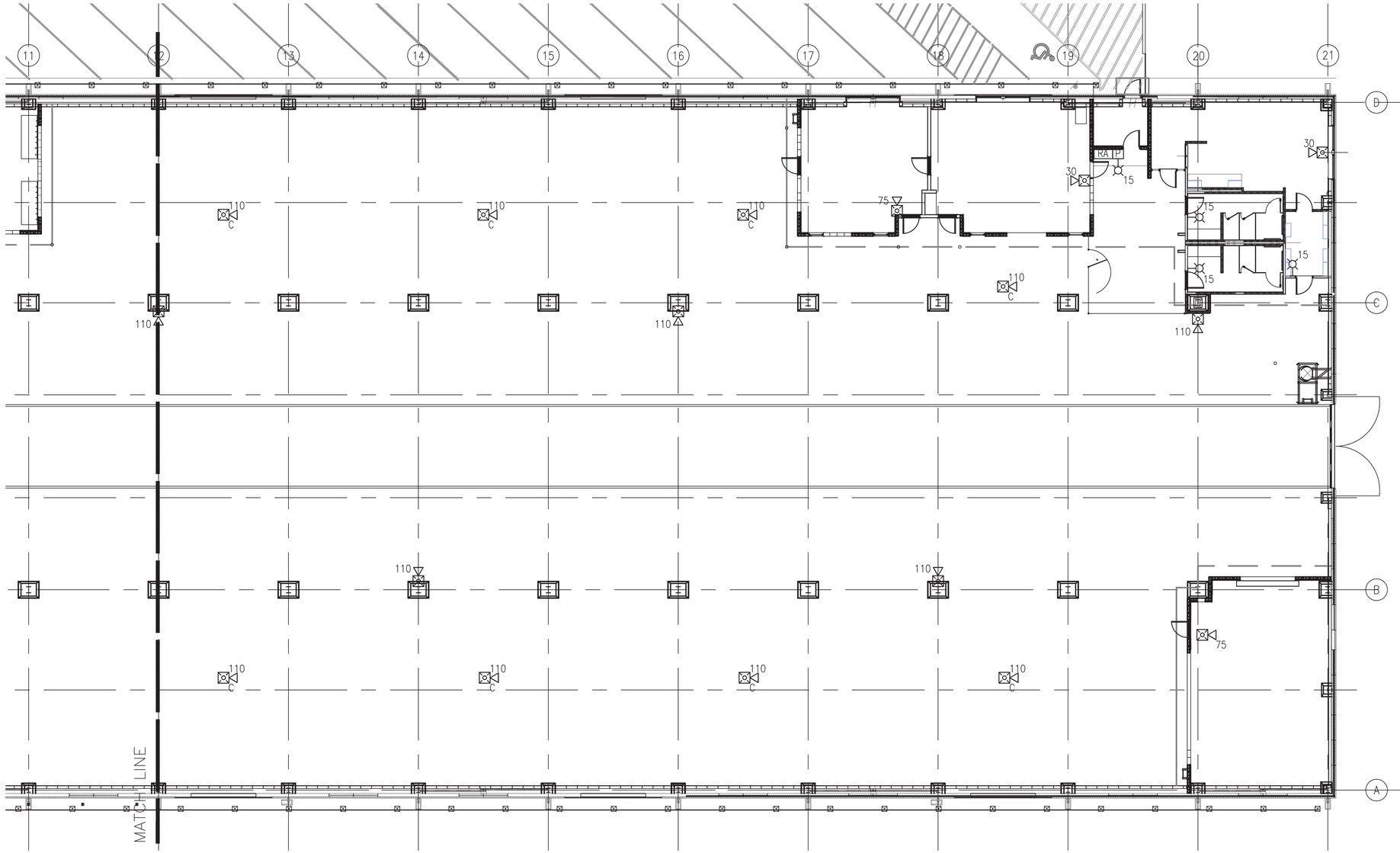

GENERAL SHEET NOTES

1. SEE SHEET FA001 FOR SYMBOLS LEGEND.
2. SEE SHEET FA501 FOR FIRE ALARM MATRIX.
3. SEE SHEET FA502 FOR FIRE ALARM RISER DIAGRAM.
4. SEE SHEET FA-501 FOR INTELLIGIBILITY REQUIREMENTS FOR INDIVIDUAL ROOMS/SPACES.

KEY PLAN

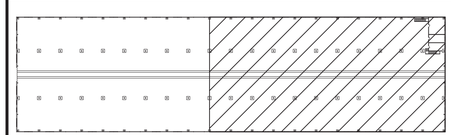

GRAPHIC SCALE

0 8' 16' 24'

SCALE: 3/32" = 1'-0"

APPR | DATE | DESCRIPTION | SYM

NAVFAC

A/E INFO

APPROVED
FOR RALPH DEAL 3/25/15
FOR COMMANDER NAVFAC

ACTIVITY
SATISFACTORY TO DATE 3-25-15

DES	DPS	DRW	DPS	CHK	SLW

<<PM/DM>> R. M. RUSSELL
BRANCH MANAGER DPS
ENGR DIRECTOR Ralph D. Deal
CUSTOMER

DEPARTMENT OF THE NAVY
NAVAL FACILITIES ENGINEERING COMMAND
PWD PORTSMOUTH

NAVAL FACILITIES ENGINEERING COMMAND ~ MID ATLANTIC
NORFOLK NAVAL SHIPYARD - PORTSMOUTH, VIRGINIA

NORFOLK NAVAL SHIPYARD
PORTSMOUTH, VIRGINIA

B260 EXTENSIVE REPAIRS

FIRE ALARM PLAN - NEW WORK

SCALE: AS NOTED
EPROJECT NO.: 1146716
CONSTR. CONTR. NO. N40085-15-R-0018
NAVFAC DRAWING NO. 12682017
SHEET 63 OF 118

FA-102

DRAWFORM REVISION: 10 MARCH 2009

FILE NAME: P:\VA\VNGY\Buildings\0260\2011_1146716_Nuclear Materials Whse Repairs\B_Design\Drawings\BLDG260-1146716-FA-001 101 102 501 502 - 2010.dwg LAYOUT NAME: FA-102 PLOTTED: Monday, March 23, 2015 - 3:43pm USER: douglas.stultz

		ACTUATE COMMON FIRE ALARM SIGNAL INDICATOR	ACTUATE AUDIBLE FIRE ALARM SIGNAL	ACTUATE COMMON SUPERVISORY ALARM SIGNAL INDICATOR	ACTUATE AUDIBLE SUPERVISORY ALARM SIGNAL	ACTUATE COMMON TROUBLE SIGNAL INDICATOR	ACTUATE AUDIBLE TROUBLE SIGNAL	INDICATE FIRE ALARM, DESCRIPTION OF DEVICE, DEVICE ADDRESS & DEVICE LOCATION AT THE FACP AND REMOTE ANNUNCIATOR	INDICATE SUPERVISORY ALARM, DESCRIPTION OF DEVICE, DEVICE ADDRESS & DEVICE LOCATION AT THE FACP AND REMOTE ANNUNCIATOR	INDICATE TROUBLE CONDITION, DESCRIPTION OF TYPE & SOURCE AT THE FACP AND REMOTE ANNUNCIATOR	DISPLAY CHANGE OF STATUS AT THE FACP AND REMOTE ANNUNCIATOR	TRANSMIT FIRE ALARM TO BASE FIRE DISPATCH	TRANSMIT SUPERVISORY ALARM TO BASE FIRE DISPATCH	TRANSMIT TROUBLE CONDITION SIGNAL TO BASE FIRE DISPATCH	ACTIVATE AUDIBLE FIRE ALARM NOTIFICATION APPLIANCES (HORNS)	ACTUATE VISUAL NOTIFICATION APPLIANCES (STROBES)	ACTIVATE FIRE PUMP RUN BEACON
		A	B	C	D	E	F	G	H	I	J	K	L	M	N	O	P
MANUAL PULL STATION	1	X	X					X			X	X1			X	X	
SMOKE DETECTOR	2	X	X					X			X	X1			X	X	
SPRINKLER WATER FLOW	3	X	X					X			X	X1			X	X	
VALVE TAMPER SWITCH	4			X	X				X		X		X2				
PUMP ROOM LOW TEMPERATURE	5			X	X				X		X		X2 X5				
FIRE PUMP RUN	6			X	X				X		X		X2 X4				X
FIRE PUMP LOSS OF PHASE	7			X	X				X		X		X2				
FIRE PUMP PHASE REVERSAL	8			X	X				X		X		X2				
FIRE PUMP CONTROLLER TROUBLE	9			X	X				X		X		X2				
FIRE ALARM LOW BATTERY	10					X	X			X	X			X3			
OPEN CIRCUIT/GROUND FAULT	11					X	X			X	X			X3			
NOTIFICATION APPLIANCE CIRCUIT SHORT	12					X	X			X	X			X3			
SIGNALING LINE CIRCUIT SHORT	13					X	X			X	X			X3			
FIRE ALARM AC POWER FAILURE	14					X	X			X	X			X3			

NOTES:

X = REQUIRED FUNCTION
X1 = BUILDING FIRE ALARMS SHALL BE TRANSMITTED TO THE FIRE DEPARTMENT DISPATCH VIA ZONE 1 OF THE DET-16 TRANSMITTER.
X2 = ALL SUPERVISORY SIGNALS SHALL BE TRANSMITTED TO THE FIRE DEPARTMENT DISPATCH VIA ZONE 2 OF THE DET-16 TRANSMITTER.
X3 = ALL TROUBLE CONDITIONS SHALL BE TRANSMITTED TO THE FIRE DEPARTMENT DISPATCH VIA ZONE 3 OF THE DET-16 TRANSMITTER.
X4 = THE FIRE PUMP RUN SUPERVISORY ALARM SHALL BE TRANSMITTED TO THE FIRE DEPARTMENT DISPATCH VIA ZONE 4 OF THE DET-16 TRANSMITTER.
X5 = THE FIRE PUMP ROOM LOW TEMPERATURE SUPERVISORY ALARM SHALL BE TRANSMITTED TO THE FIRE DEPARTMENT DISPATCH VIA ZONE 5 OF THE DET-16 TRANSMITTER.

INTELLIGIBILITY REQUIREMENTS

ROOM #	ROOM NAME	REQUIRED CIS SCORE
101	VESTIBULE	N/A
102	WAREHOUSE	C
103	OFFICE	A
104	LOCKER ROOM	A
105	CLEAN AREA	B
106	WELDING AREA	B
107	ELECTRICAL ROOM	B
108	FIRE PUMP ROOM	B
109	MEN'S TOILET	A
110	WOMEN'S TOILET	A
111	BREAK AREA	A
112	JANITOR'S CLOSET	N/A
113	VESTIBULE	N/A

INTELLIGIBILITY CLASSIFICATION

A CIS SCORE GREATER THAN 0.7 REQUIRED THROUGHOUT

B CIS SCORE LESS THAN 0.7 PERMITTED PROVIDE BOTH OF THE FOLLOWING STIPULATIONS ARE MET:

– OCCUPANTS AT ALL POINTS IN SPACE CAN DISCERN A VOICE MESSAGE IS BEING BROADCAST

– NEED ONLY WALK 30 FEET TO FIND A LOCATION WITHIN THE SPACE WITH A CIS SCORE GREATER THAN 0.7

C CIS SCORE LESS THAN 0.7 PERMITTED PROVIDE BOTH OF THE FOLLOWING STIPULATIONS ARE MET:

– OCCUPANTS AT ALL POINTS IN SPACE CAN DISCERN A VOICE MESSAGE IS BEING BROADCAST

– NEED ONLY WALK 50 FEET TO FIND A LOCATION WITHIN THE SPACE WITH A CIS SCORE GREATER THAN 0.7

N/A NOT APPLICABLE; SPACE DOES NOT CONTAIN AN AUDIBLE NOTIFICATION APPLIANCE.

APPR | DATE | DESCRIPTION | SYM

NAVFAC

SEAL

A/E INFO

APPROVED
FOR RALPH DEAL 3/25/15
FOR COMMANDER NAVFAC

ACTIVITY
SATISFACTORY TO DATE 3-25-15

DES	DPS	DRW	DPS	CHK	SLW

<<PM/DM>> R. M. RUSSELL
BRANCH MANAGER DPS
ENGR DIRECTOR Ralph D. Deal
CUSTOMER

DEPARTMENT OF THE NAVY
NAVAL FACILITIES ENGINEERING COMMAND
PWD PORTSMOUTH

NAVAL FACILITIES ENGINEERING COMMAND – MID ATLANTIC
NORFOLK NAVAL SHIPYARD – PORTSMOUTH, VIRGINIA

NORFOLK NAVAL SHIPYARD
PORTSMOUTH, VIRGINIA

B260 EXTENSIVE REPAIRS

FIRE ALARM MATRIX AND INTELLIGIBILITY REQUIREMENTS

SCALE: AS NOTED
EPROJECT NO.: 1146716
CONSTR. CONTR. NO.: N40085-15-R-0018
NAVFAC DRAWING NO.: 12682018
SHEET 64 OF 118

FA-501

DRAWFORM REVISION: 10 MARCH 2009

FILE NAME: P:\VA\NWSY\Buildings\V260\2011_1146716_Nuclear Materials Wrse Repairs\B_Design\Drawings\BLD260-1146716-FA-001 101 102 501 502 – 2010.dwg LAYOUT NAME: FA-501 PLOTTED: Monday, March 23, 2015 – 3:43pm USER: douglas.stultz

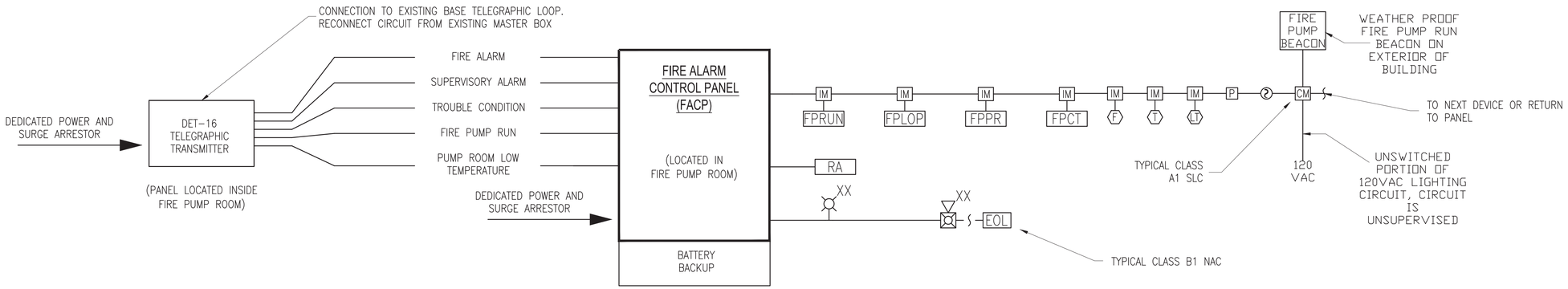

FIRE ALARM RISER DIAGRAM

N.T.S.

C1
FA503

FIRE ALARM GENERAL NOTES

1. SCOPE OF WORK – WORK INCLUDES REMOVING THE EXISTING FIRE ALARM SYSTEM AND REPLACING WITH A FULLY ADDRESSABLE FIRE ALARM SYSTEM.
2. PROVIDE A COMPLETE FIRE ALARM SYSTEM THROUGHOUT THE BUILDING AS INDICATED. SYSTEM SHALL CONSIST OF ALARM NOTIFICATION APPLIANCES, MANUAL PULL STATIONS, SMOKE DETECTION, WIRING, CONDUIT AND ALL OTHER ASSOCIATED EQUIPMENT.
3. COORDINATE INSTALLATION OF DEVICES AND APPLIANCES WITH ALL OTHER TRADES. FIRE ALARM SYSTEM DEVICES AND APPLIANCES SHALL NOT BE BLOCKED OR OBSCURED BY ANY WALL OR CEILING LEVEL EQUIPMENT, CONDUIT, PIPING, LIGHT FIXTURES OR SIGNAGE.
4. PROVIDE ALL EQUIPMENT, SOFTWARE, PROGRAMMING, ACCESSORIES WHETHER MENTIONED OR NOT, INCLUDING SMOKE SENSORS, ADDRESSABLE INTERFACE AND RELAY DEVICES, TERMINAL CABINETS, CONDUIT, WIRE, JUNCTION BOXES, FASTENERS, HANGERS, ETC.
5. ALL WIRING & CIRCUITS SHALL BE PROVIDED IN ELECTRICAL METALLIC TUBING OR CONDUIT & CONCEALED ABOVE THE CEILING WHERE POSSIBLE.
6. WITHIN NON-STORAGE AREAS (OFFICES, RESTROOMS, ELECTRICAL ROOMS, ETC) INSTALL ALL NEW WALL MOUNTED STROBES 6-INCHES BELOW CEILINGS OR 80-INCHES AFF, WHICHEVER IS LOWER, TO CENTERLINE OF STROBE LENS.
7. WITHIN THE LOW BAY AREAS, PROVIDE CEILING MOUNTED STROBES WHERE INDICATED.
8. WITHIN THE HIGH BAY AREAS MOUNT NOTIFICATION APPLIANCES ON COLUMNS AT THE SAME ELEVATION AS THE EXISTING COLUMN MOUNTED APPLIANCES.
9. ALL EQUIPMENT AND DEVICES SHALL BE UL LISTED.
10. THE CONTRACTOR SHALL FIELD VERIFY ALL EXISTING CONDITIONS AND DIMENSIONS ON THE DRAWINGS PRIOR TO THE EXECUTION OF THIS CONTRACT. IT SHALL BE THE RESPONSIBILITY OF THE CONTRACTOR TO VERIFY THE LOCATION OF ALL SYSTEM COMPONENTS. CONTRACTOR SHALL REPORT ANY DISCREPANCIES WITH THESE DRAWINGS TO THE CONTRACTING OFFICER IMMEDIATELY.
11. THE CONTRACTOR SHALL SUBMIT SHOP DRAWINGS SYSTEM CATALOG PRODUCT DATA SHEETS, SUPPORTING CALCULATIONS AS REQUIRED. SHOP DRAWINGS SHALL INCLUDE ALL COMPONENTS AND DETAILS REQUIRED BY THE APPLICABLE CODES, STANDARDS AND CONTRACT SPECIFICATIONS.
12. SHOP DRAWINGS SHALL BE JOB SPECIFIC. NO PORTION OF THE SHOP DRAWINGS SHALL INDICATE EQUIPMENT OR TERMINATIONS NOT UTILIZED FOR THIS PROJECT.
13. THE NAVFAC MIDLANT FIRE PROTECTION ENGINEER SHALL REVIEW AND APPROVE FIRE ALARM SUBMITTALS PRIOR TO THE PURCHASE OR INSTALLATION OF ANY FIRE ALARM EQUIPMENT, WIRE OR CONDUIT.
14. ALL WORK SHALL BE INSPECTED BY NAVFAC MIDLANT FIRE PROTECTION ENGINEER FOR COMPLIANCE WITH THE REQUIREMENTS OF THE CONTRACT SPECIFICATIONS.
15. ALL MATERIAL AND LABOR SHALL BE UNDER WARRANTY FOR ONE YEAR FROM THE FINAL ACCEPTANCE BY NAVFAC MIDLANT FIRE PROTECTION AND THE CONTRACTING OFFICER. ANY NEW DEVICES OR EQUIPMENT FOUND FAULTY SHALL BE REPLACED AS PART OF THE WARRANTY.
16. THE CONTRACTOR SHALL PREPARE "AS-BUILT" DRAWINGS IN ELECTRONIC FORMAT REFLECTING ACCURATE FIELD CONDITIONS.
17. PROVIDE CIRCUITS FROM FACP TO DET-16 FOR TRANSMISSION OF SEPARATE FIRE ALARM, SUPERVISORY ALARM, TROUBLE CONDITION, FIRE PUMP RUN SIGNALS, AND FIRE PUMP ROOM LOW TEMPERATURE.
18. SIGNALING LINE CIRCUITS SHALL BE CLASS A

APPR | DATE | DESCRIPTION | SYM

NAVFAC

SEAL

A/E INFO

APPROVED
FOR RALPH DEAL 2/23/15
FOR COMMANDER NAVFAC

ACTIVITY
SATISFACTORY TO DATE 2-23-15

DES	DPS	DRW	DPS	CHK	SLW

<<PM/DM>> R. M. RUSSELL
BRANCH MANAGER DPS
ENGR DIRECTOR Ralph D. Deal
CUSTOMER

DEPARTMENT OF THE NAVY
NAVAL FACILITIES ENGINEERING COMMAND ~ MID ATLANTIC
PWD PORTSMOUTH
NAVAL FACILITIES ENGINEERING COMMAND
NORFOLK NAVAL SHIPYARD – PORTSMOUTH, VIRGINIA
NORFOLK NAVAL SHIPYARD
PORTSMOUTH, VIRGINIA

B260 EXTENSIVE REPAIRS

FIRE ALARM RISER DIAGRAM

SCALE: AS NOTED
EPROJECT NO.: 1146716
CONSTR. CONTR. NO.
N40085-15-R-0018
NAVFAC DRAWING NO.
12682019
SHEET 65 OF 118

FA-502

DRAWFORM REVISION: 10 MARCH 2009

FILE NAME: P:\VA\VNGY\Buildings\02601\201_1146716_Nuclear Materials Wnse Repairs\B_Design\Drawings\BLDG260-1146716-FA-001 101 102 501 502 - 2010.dwg LAYOUT NAME: FA-502 PLOTTED: Monday, March 23, 2015 - 3:43pm USER: douglas.stultz

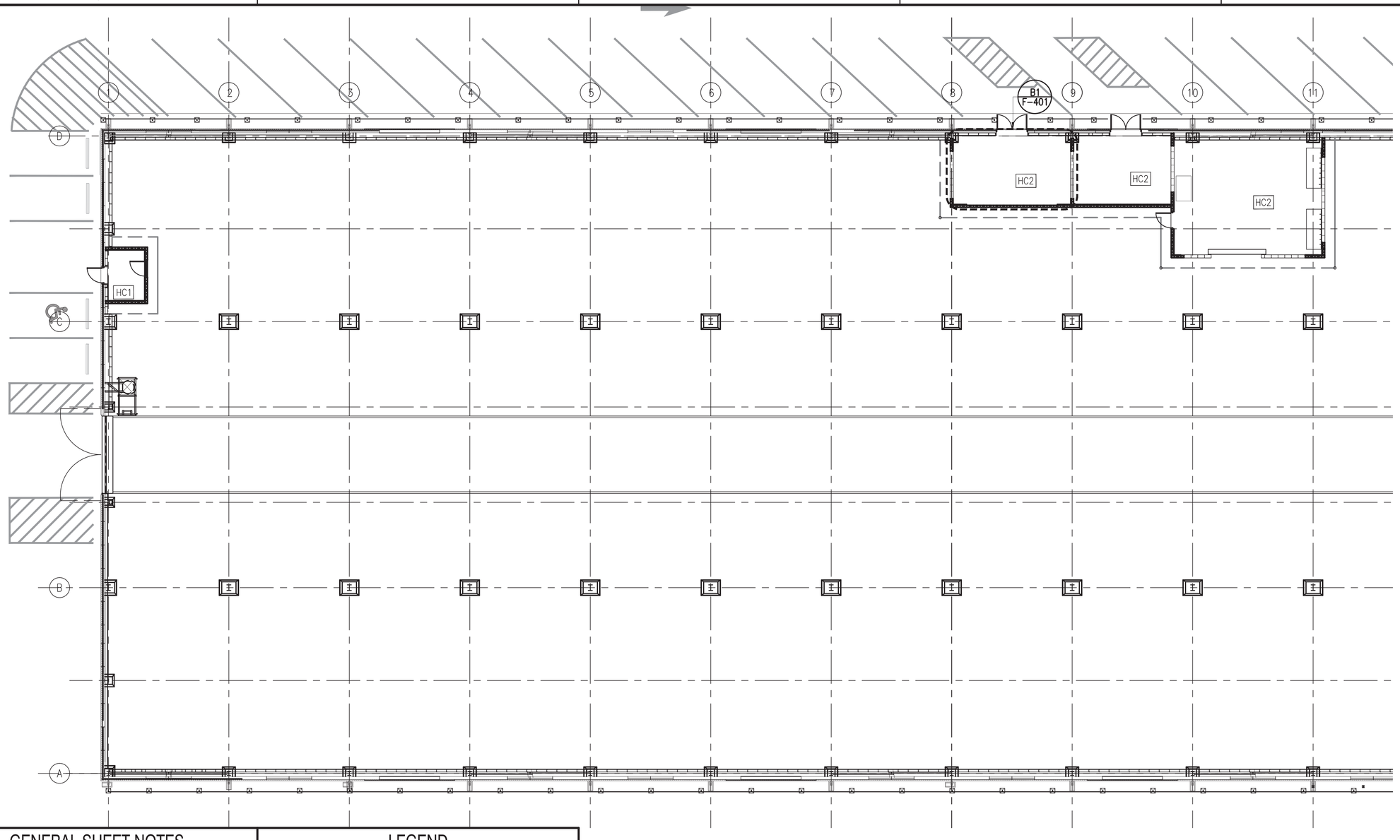

GENERAL SHEET NOTES

1. PROVIDE k=16.8 PENDENT ESFR FIRE SPRINKLER PROTECTION THROUGHOUT THE ENTIRE WAREHOUSE.
2. PROVIDE STANDARD SPRAY QUICK RESPONSE SPRINKLERS IN THE SUPPORT AREAS. SPRINKLER DENSITY SHALL BE BASED UPON THE HAZARD INDICATED ON THE FLOOR PLANS.
3. PROVIDE SPRINKLER PROTECTION ABOVE CEILINGS IN LOW BAY STORAGE AREAS. SPRINKLER SYSTEM DESIGN IN THESE ABOVE CEILING SPACES SHALL BE BASED UPON A HC2 FM HAZARD CLASSIFICATION. UTILIZE STANDARD SPRAY QUICK RESPONSE SPRINKLERS.
4. SEE SHEET F-501 FOR DESIGN CRITERIA
5. SEE SHEET F-401, F-402 AND F-403 FOR FIRE PUMP ROOM LAYOUT INCLUDING FIRE DEPARTMENT CONNECTION AND FIRE PUMP TEST HEADER.

LEGEND

HC1	FM HAZARD CLASSIFICATION
HC2	FM HAZARD CLASSIFICATION

APPR | DATE | DESCRIPTION | SYM

NAVFAC

SEAL

A/E INFO

APPROVED
FOR RALPH DEAL 3/23/15
FOR COMMANDER NAVFAC

ACTIVITY
SATISFACTORY TO DATE 3-24-15

DES DPS | DRW DPS | CHK SLW
<<PM/DM>> R. M. RUSSELL
BRANCH MANAGER DPS
ENGR DIRECTOR Ralph D. Deal
CUSTOMER

DEPARTMENT OF THE NAVY
NAVAL FACILITIES ENGINEERING COMMAND – MID ATLANTIC
PWD PORTSMOUTH
NAVAL FACILITIES ENGINEERING COMMAND
NORFOLK NAVAL SHIPYARD – PORTSMOUTH, VIRGINIA
NORFOLK NAVAL SHIPYARD
PORTSMOUTH, VIRGINIA

B260 EXTENSIVE REPAIRS

FIRE SPRINKLER PLAN – NEW WORK

SCALE: AS NOTED
EPROJECT NO.: 1146716
CONSTR. CONTR. NO. N40085-15-R-0018
NAVFAC DRAWING NO. 12682020
SHEET 66 OF 118

F-101

DRAWFORM REVISION: 10 MARCH 2009

FILE NAME: P:\VA\VNSY\Buildings\0260\2011_1146716_Nuclear Materials Wrse Repairs\B_Design\Drawings\BLDG260-1146716-F-101 & 102 - 2010.dwg LAYOUT NAME: F-101 PLOTTED: Monday, March 23, 2015 - 3:43pm USER: douglas.stultz

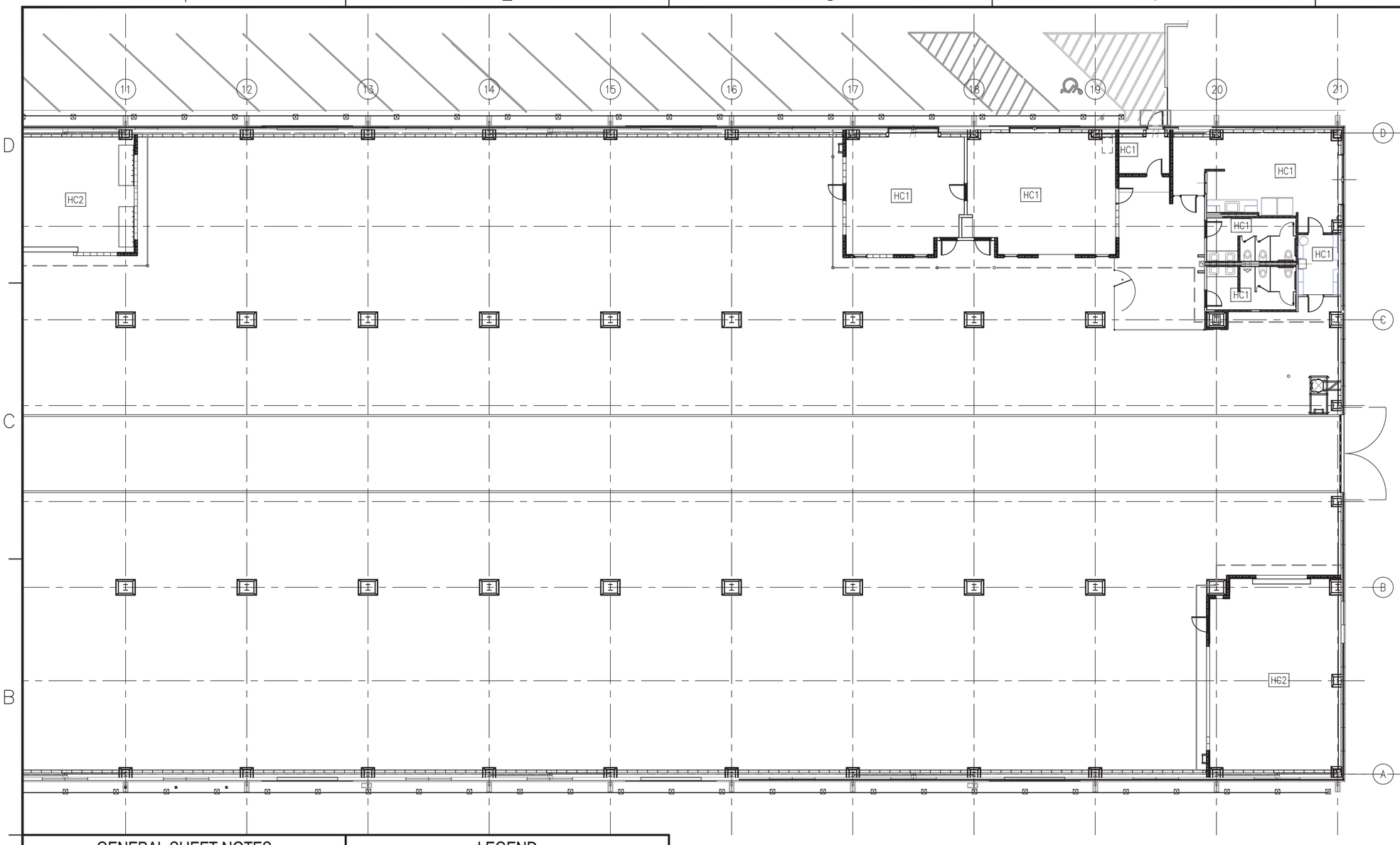

GENERAL SHEET NOTES

1. PROVIDE k=16.8 PENDENT ESFR FIRE SPRINKLER PROTECTION THROUGHOUT THE ENTIRE WAREHOUSE.
2. PROVIDE STANDARD SPRAY QUICK RESPONSE SPRINKLERS IN THE SUPPORT AREAS. SPRINKLER DENSITY SHALL BE BASED UPON THE HAZARD INDICATED ON THE FLOOR PLANS.
3. PROVIDE SPRINKLER PROTECTION ABOVE CEILINGS IN LOW BAY STORAGE AREAS. SPRINKLER SYSTEM DESIGN IN THESE ABOVE CEILING SPACES SHALL BE BASED UPON A HC2 FM HAZARD CLASSIFICATION. UTILIZE STANDARD SPRAY QUICK RESPONSE SPRINKLERS.
4. SEE SHEET F-501 FOR DESIGN CRITERIA

LEGEND

HC1	FM HAZARD CLASSIFICATION
HC2	FM HAZARD CLASSIFICATION

NO.	DESCRIPTION	DATE	APPR

NAVFAC

SEAL

A/E INFO

APPROVED
FOR RALPH DEAL 3/23/15
FOR COMMANDER NAVFAC

ACTIVITY
SATISFACTORY TO DATE 3-23-15

DES DPS | DRW DPS | CHK JAW

<<PM/DM>> R. M. RUSSELL

BRANCH MANAGER DPS

ENGR DIRECTOR Ralph D. Deal

CUSTOMER

DEPARTMENT OF THE NAVY
NAVAL FACILITIES ENGINEERING COMMAND
PWD PORTSMOUTH

NAVAL FACILITIES ENGINEERING COMMAND – MID ATLANTIC
NORFOLK NAVAL SHIPYARD – PORTSMOUTH, VIRGINIA

NORFOLK NAVAL SHIPYARD
PORTSMOUTH, VIRGINIA

B260 EXTENSIVE REPAIRS

FIRE SPRINKLER PLAN – NEW WORK

SCALE: SLW
EPROJECT NO.: 1146716
CONSTR. CONTR. NO. N40085-15-R-0018
NAVFAC DRAWING NO. 12682021
SHEET 67 OF 118

F-102

DRAWFORM REVISION: 10 MARCH 2009

FILE NAME: P:\VA\VNSY\Buildings\0260\2011_1146716_Nuclear Materials Wrse Repairs\B_Design\Drawings\BLDG260-1146716-F-101 & 102 - 2010.dwg LAYOUT NAME: F-102 PLOTTED: Monday, March 23, 2015 - 3:43pm USER: douglass.stultz

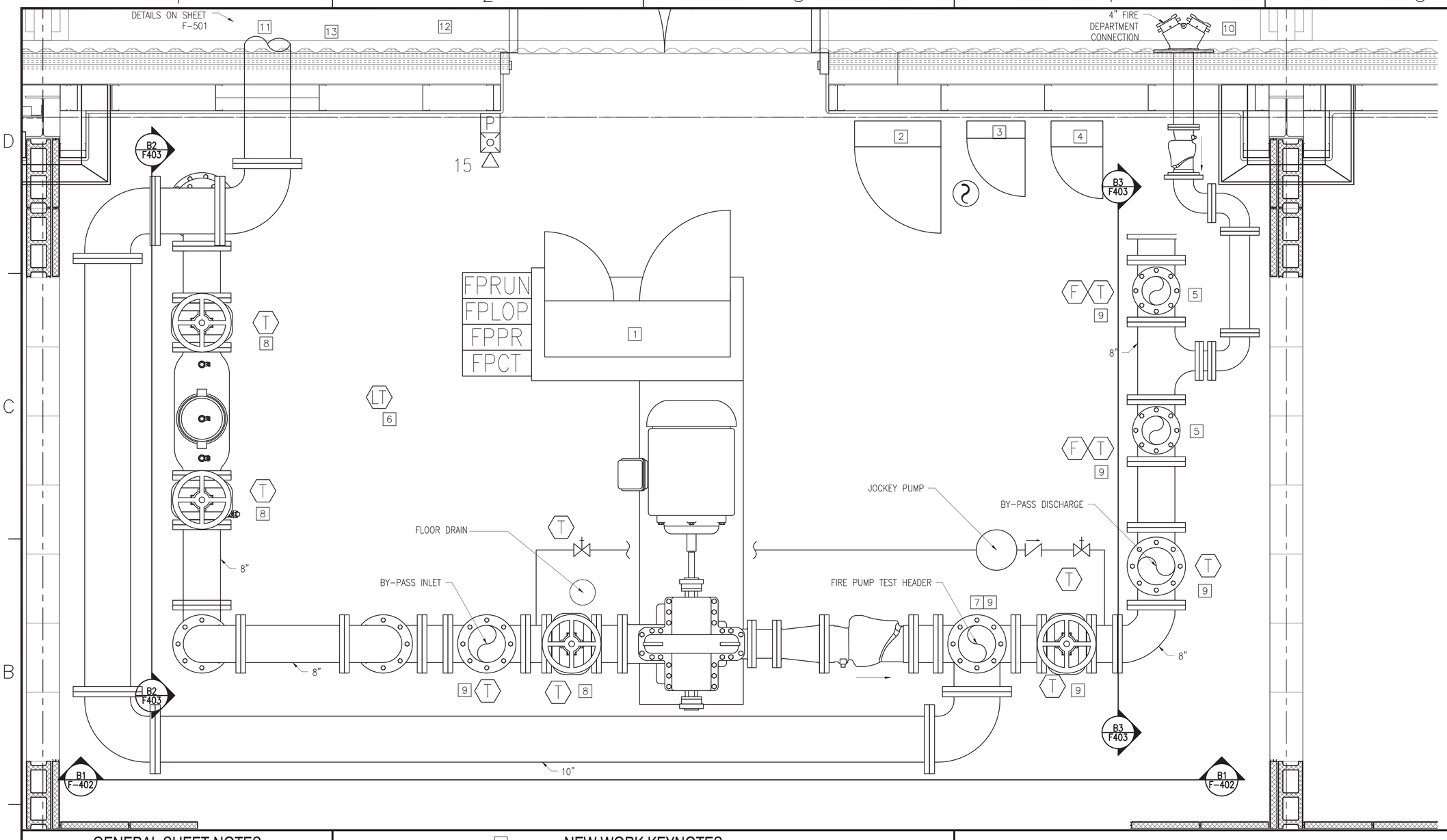

GENERAL SHEET NOTES

1. DETAILS INDICATE THE USE OF FLANGED FITTINGS. MECHANICAL COUPLINGS ARE PERMITTED DOWNSTREAM OF THE CHECK VALVE ON THE DISCHARGE SIDE OF THE FIRE PUMP AND ON THE BY-PASS PIPING.
2. THE 2 INCH MAIN DRAIN PIPING AND BACKFLOW PREVENTER AIR GAP DRAIN PIPING SHALL PENETRATE THE EXTERIOR WALL NO MORE THAN 2 FEET ABOVE GRADE (MEASURED TO THE CENTERLINE OF THE PIPE.)
3. ALL DRAIN PIPING, TEST HEADER PIPING AND FIRE DEPARTMENT CONNECTION PIPING SHALL BE PITCHED AT A MINIMUM OF 0.5 INCHES PER 10 FEET.
4. MAINTAIN A MINIMUM OF 4 FEET OF CLEARANCE AROUND THE FIRE PUMP, PUMP CONTROLLER AND CONTROL VALVES. MAINTAIN NFPA 70 REQUIRED CLEARANCES IN FRONT OF FACP AND TRANSMITTER.

NEW WORK KEYNOTES

1. SOFT-START FIRE PUMP CONTROLLER.
2. FIRE ALARM CONTROL PANEL.
3. DET-16 16 ZONE SOLID STATE TELEGRAPHIC TRANSMITTER.
4. JOCKEY PUMP CONTROLLER.
5. SPRINKLER SYSTEM RISERS FOR NORTH AND SOUTH BUILDING SPRINKLER SYSTEMS
6. PROVIDE A UL LISTED SUPERVISORY AIR TEMPERATURE DEVICE. DO NOT LOCATE NEAR HEATER.
7. DO NOT PROVIDE TAMPER SWITCH FOR NORMALLY CLOSED TEST HEADER CONTROL VALVE. PROVIDE CHAIN AND BREAK AWAY TYPE LOCK. LOCK SHALL BE KEYED AS DIRECTED BY THE CONTRACTING OFFICER.
8. LISTED OS&Y VALVES REQUIRED.
9. LISTED OS&Y OR LISTED BUTTERFLY VALVES WITH INTEGRAL TAMPER SWITCHES PERMITTED.
10. PROVIDE BALL DRIP FOR FIRE DEPARTMENT CONNECTION. DISCHARGE SHALL BE TO THE EXTERIOR.
11. PROVIDE A LOW POINT DRAIN FOR THE FIRE PUMP TEST HEADER.
12. FIRE PUMP RUN BEACON
13. FIRE PUMP RUN SIGN

PLAN AT PUMP ROOM

B1 F-401

SCALE: 1" = 1' - 0"

GRAPHIC SCALE

1" = 1'-0" 0 6" 1' 2'

SYM	DESCRIPTION	DATE	APPR

NAVFAC

SEAL

A/E INFO

APPROVED: Ch Bonder FOR RALPH DEAL 3/23/15
FOR COMMANDER NAVFAC

ACTIVITY: K Bonder
SATISFACTORY TO DATE 3-23-15

DES	DRW	CHK
DPS	DPS	SLW

<<PM/DM>> R. M. RUSSELL
BRANCH MANAGER DPS
ENGR DIRECTOR Ralph D. Deal
CUSTOMER K Bonder

DEPARTMENT OF THE NAVY
NAVAL FACILITIES ENGINEERING COMMAND
NAVAL FACILITIES ENGINEERING COMMAND ~ MID ATLANTIC
PWD PORTSMOUTH NORFOLK NAVAL SHIPYARD - PORTSMOUTH, VIRGINIA
NORFOLK NAVAL SHIPYARD PORTSMOUTH, VIRGINIA

B260 EXTENSIVE REPAIRS

COMBINED FIRE PUMP ROOM LAYOUT AND FIRE ALARM PLAN

SCALE: AS NOTED
EPROJECT NO.: 1146716
CONSTR. CONTR. NO. N40085-15-R-0018
NAVFAC DRAWING NO. 12682022
SHEET 68 OF 118

F-401

DRAWFORM REVISION: 10 MARCH 2009

FILE NAME: P:\VA\NNSY\Buildings\0260\2011_1146716_Nuclear Materials Whse Repairs\B_Design\Drawings\BLDG260-1146716-F-401 402 & 403 - 2010.dwg LAYOUT NAME: F-401 PLOTTED: Monday, March 23, 2015 - 3:43pm USER: douglas.stultz

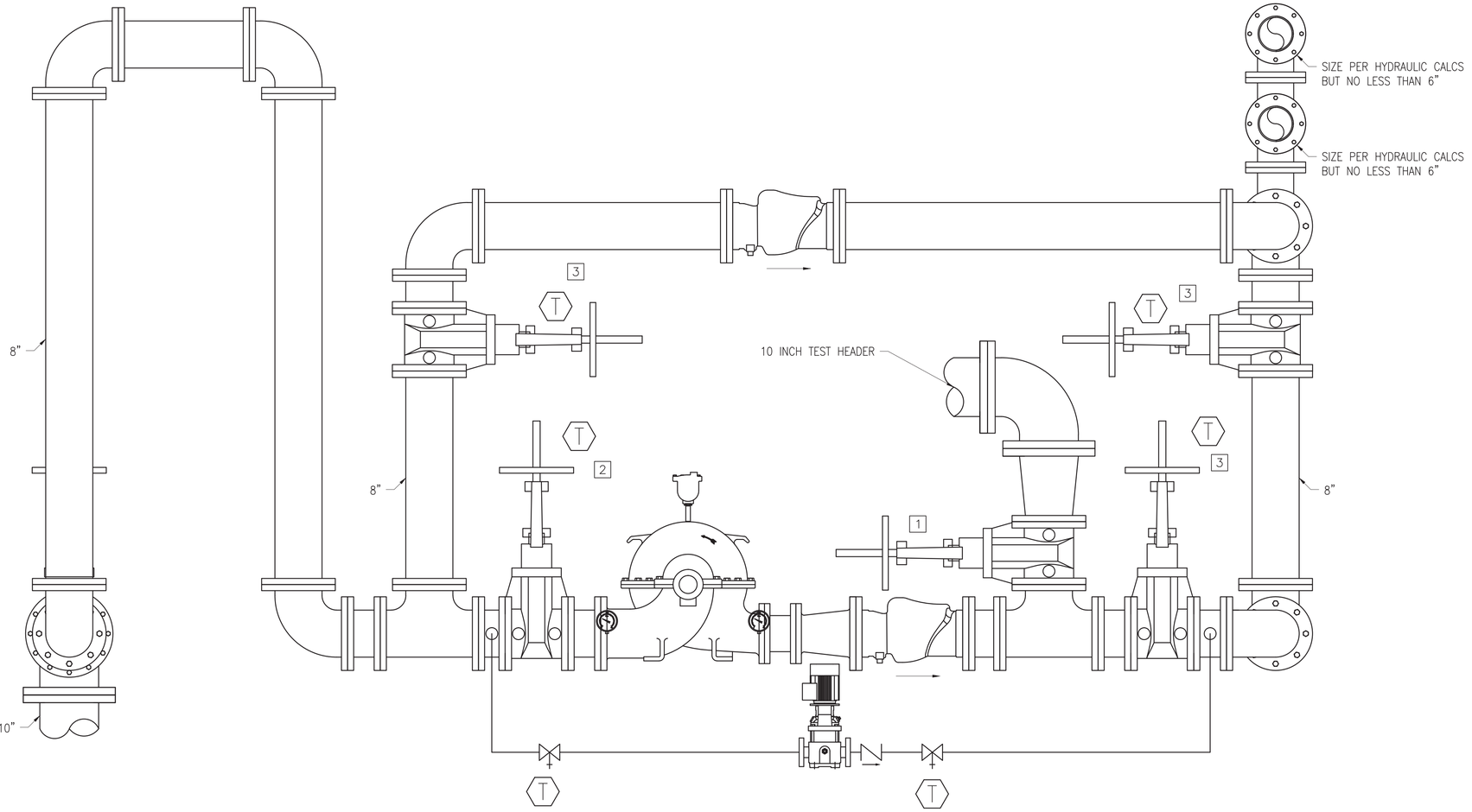

GENERAL SHEET NOTES

1. DETAILS INDICATE THE USE OF FLANGED FITTINGS. MECHANICAL COUPLINGS ARE PERMITTED DOWNSTREAM OF THE CHECK VALVE ON THE DISCHARGE SIDE OF THE FIRE PUMP AND ON THE BY-PASS PIPING.
2. THE 2 INCH MAIN DRAIN PIPING AND BACKFLOW PREVENTER AIR GAP DRAIN PIPING SHALL PENETRATE THE EXTERIOR WALL NO MORE THAN 2 FEET ABOVE GRADE (MEASURED TO THE CENTERLINE OF THE PIPE.)
3. ALL DRAIN PIPING, TEST HEADER PIPING AND FIRE DEPARTMENT CONNECTION PIPING SHALL BE PITCHED AT A MINIMUM OF 0.5 INCHES PER 10 FEET.
4. MAINTAIN A MINIMUM OF 4 FEET OF CLEARANCE AROUND THE FIRE PUMP, PUMP CONTROLLER AND CONTROL VALVES

NEW WORK KEYNOTES

1. DO NOT PROVIDE TAMPER SWITCH FOR NORMALLY CLOSED TEST HEADER CONTROL VALVE. PROVIDE CHAIN AND BREAK AWAY TYPE LOCK. LOCK SHALL BE KEYED AS DIRECTED BY THE CONTRACTING OFFICER.
2. LISTED OS&Y VALVES REQUIRED.
3. LISTED OS&Y OR LISTED BUTTERFLY VALVES WITH INTEGRAL TAMPER SWITCHES PERMITTED.

ELEVATION AT PUMP ROOM

SCALE: 1" = 1' - 0"

B1
F-402

GRAPHIC SCALE

1" = 1'-0"

0 6" 1' 2'

SYM	DESCRIPTION	DATE	APPR

NAVFAC

SEAL

A/E INFO

APPROVED
FOR RALPH DEAL 3/23/15
FOR COMMANDER NAVFAC

ACTIVITY

SATISFACTORY TO DATE 3-23-15

DES	DPS	DRW	DPS	CHK	SLW

<<PM/DM>> R. M. RUSSELL
BRANCH MANAGER DPS
ENGR DIRECTOR Ralph D. Deal
CUSTOMER

DEPARTMENT OF THE NAVY
NAVAL FACILITIES ENGINEERING COMMAND
NAVAL FACILITIES ENGINEERING COMMAND ~ MID ATLANTIC
PWD PORTSMOUTH NORFOLK NAVAL SHIPYARD - PORTSMOUTH, VIRGINIA

NORFOLK NAVAL SHIPYARD PORTSMOUTH, VIRGINIA

B260 EXTENSIVE REPAIRS

FIRE PUMP ROOM SECTIONAL LAYOUT PLAN

SCALE: AS NOTED
EPROJECT NO.: 1146716
CONSTR. CONTR. NO. N40085-15-R-0018
NAVFAC DRAWING NO. 12682023
SHEET 69 OF 118

F-402

DRAWFORM REVISION: 10 MARCH 2009

FILE NAME: P:\VA\NNSY\Buildings\0260\2011_1146716_Nuclear Materials Whse Repairs\B_Design\Drawings\BLDG260-1146716-F-401 402 & 403 - 2010.dwg LAYOUT NAME: F-402 PLOTTED: Monday, March 23, 2015 - 3:43pm USER: douglas.stultz

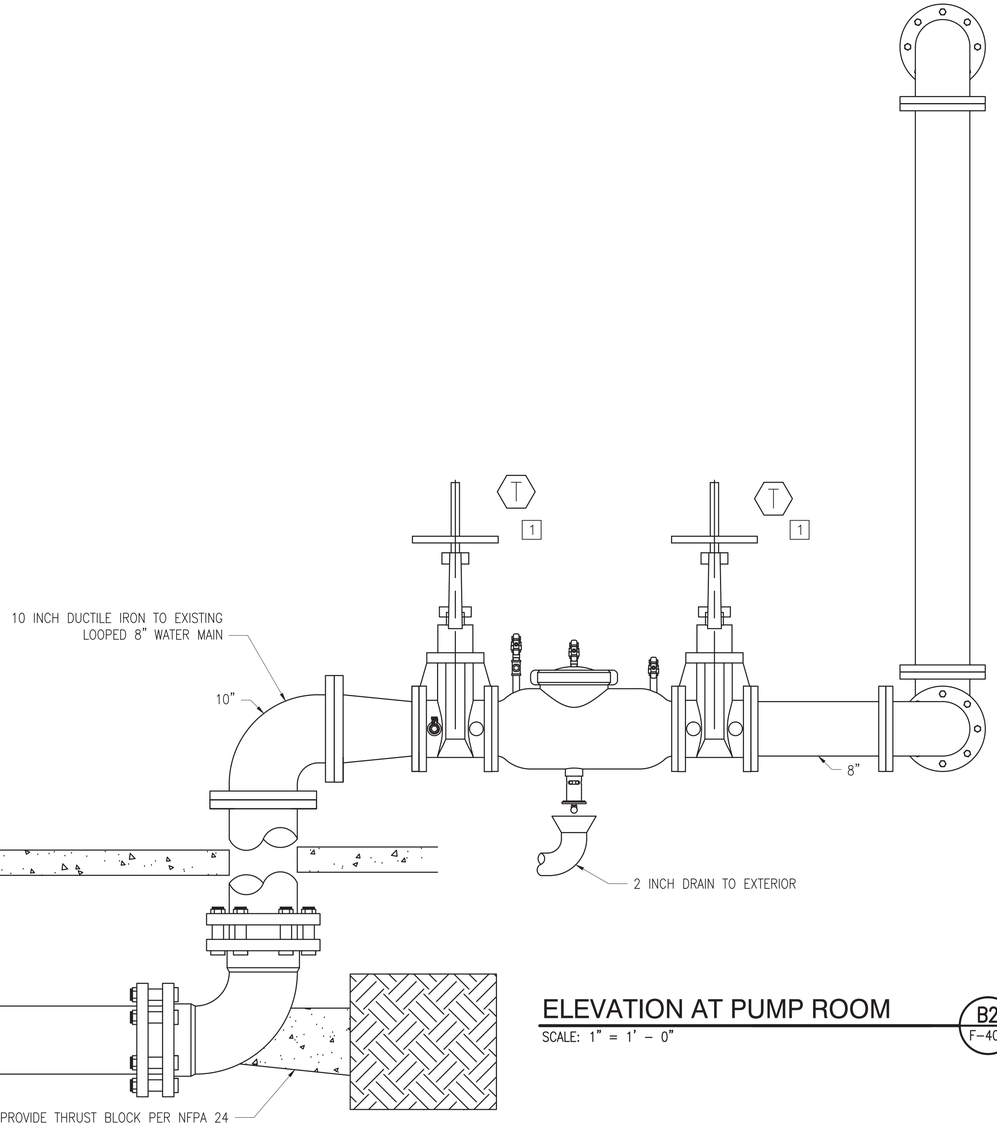

ELEVATION AT PUMP ROOM B2 F-403
SCALE: 1" = 1' – 0"

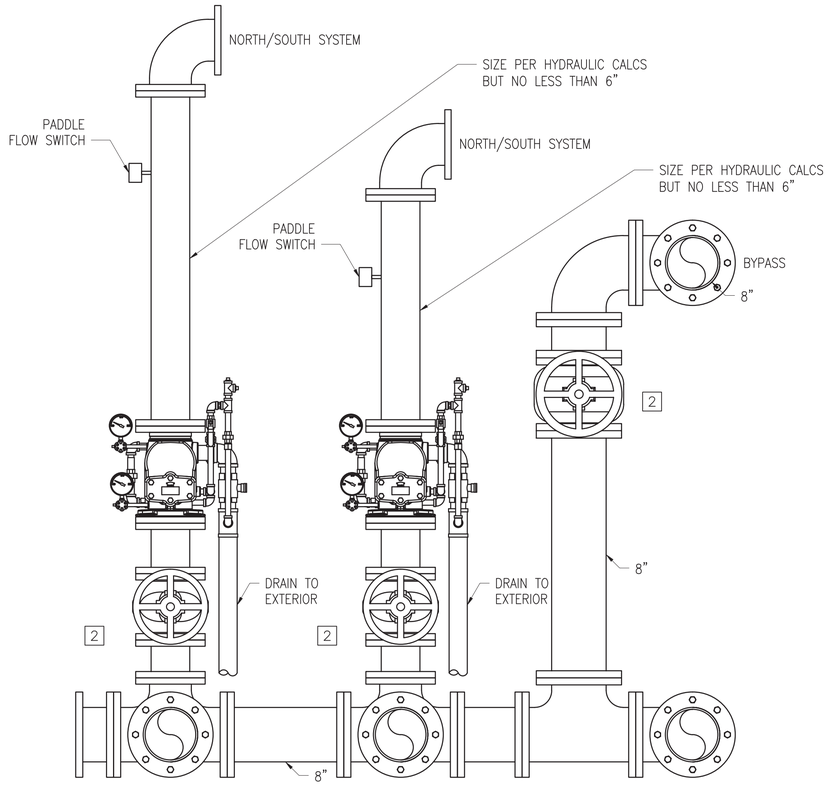

ELEVATION AT PUMP ROOM B3 F-403
SCALE: 1" = 1' – 0"

GENERAL SHEET NOTES

1. DETAILS INDICATE THE USE OF FLANGED FITTINGS. MECHANICAL COUPLINGS ARE PERMITTED DOWNSTREAM OF THE CHECK VALVE ON THE DISCHARGE SIDE OF THE FIRE PUMP AND ON THE BY–PASS PIPING.
2. THE 2 INCH MAIN DRAIN PIPING AND BACKFLOW PREVENTER AIR GAP DRAIN PIPING SHALL PENETRATE THE EXTERIOR WALL NO MORE THAN 2 FEET ABOVE GRADE (MEASURED TO THE CENTERLINE OF THE PIPE.)
3. ALL DRAIN PIPING, TEST HEADER PIPING AND FIRE DEPARTMENT CONNECTION PIPING SHALL BE PITCHED AT A MINIMUM OF 0.5 INCHES PER 10 FEET.
4. MAINTAIN A MINIMUM OF 4 FEET OF CLEARANCE AROUND THE FIRE PUMP, PUMP CONTROLLER AND CONTROL VALVES

☐ NEW WORK KEYNOTES

1. LISTED OS&Y VALVES REQUIRED.
2. LISTED OS&Y OR LISTED BUTTERFLY VALVES WITH INTEGRAL TAMPER SWITCHES PERMITTED.

GRAPHIC SCALE

1" = 1'–0" 0 6" 1' 2'

APPR	DATE	DESCRIPTION	SYM

SEAL

A/E INFO

APPROVED
FOR RALPH DEAL 2/23/15
FOR COMMANDER NAVFAC

ACTIVITY
SATISFACTORY TO DATE 2-23-15

DES	DPS	DRW	DPS	CHK	SLW

<<PM/DM>> R. M. RUSSELL
BRANCH MANAGER DPS
ENGR DIRECTOR Ralph D. Deal
CUSTOMER

DEPARTMENT OF THE NAVY
NAVAL FACILITIES ENGINEERING COMMAND
PWD PORTSMOUTH
NORFOLK NAVAL SHIPYARD
NAVAL FACILITIES ENGINEERING COMMAND ~ MID ATLANTIC
NORFOLK NAVAL SHIPYARD – PORTSMOUTH, VIRGINIA
PORTSMOUTH, VIRGINIA

B260 EXTENSIVE REPAIRS

FIRE PUMP ROOM SECTIONAL LAYOUT PLAN

SCALE: AS NOTED
EPROJECT NO.: 1146716
CONSTR. CONTR NO.: N40085-15-R-0018
NAVFAC DRAWING NO.: 12682024
SHEET 70 OF 118

F-403

DRAWFORM REVISION: 10 MARCH 2009

FILE NAME: P:\VA\NNSY\Buildings\0260\2011_1146716_Nuclear Materials Wtse Repairs\B_Design\Drawings\BLDG260-1146716-F-401 402 & 403 – 2010.dwg LAYOUT NAME: F-403 PLOTTED: Monday, March 23, 2015 – 3:43pm USER: douglas.stultz

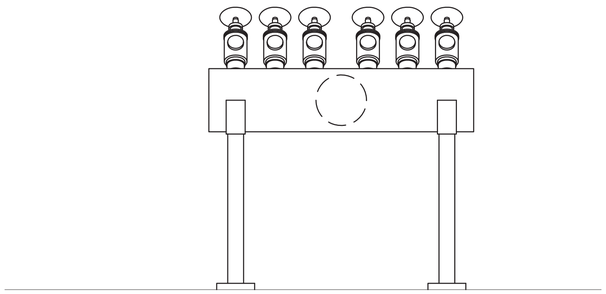

MINIMUM 4" RED LETTERING ON
REFLECTIVE WHITE BACKGROUND

CONTACT
FIRE DEPARTMENT
IF FLASHING

TEST HEADER FRONT DETAIL

SCALE: 1" = 1' – 0"

C1 / F-501

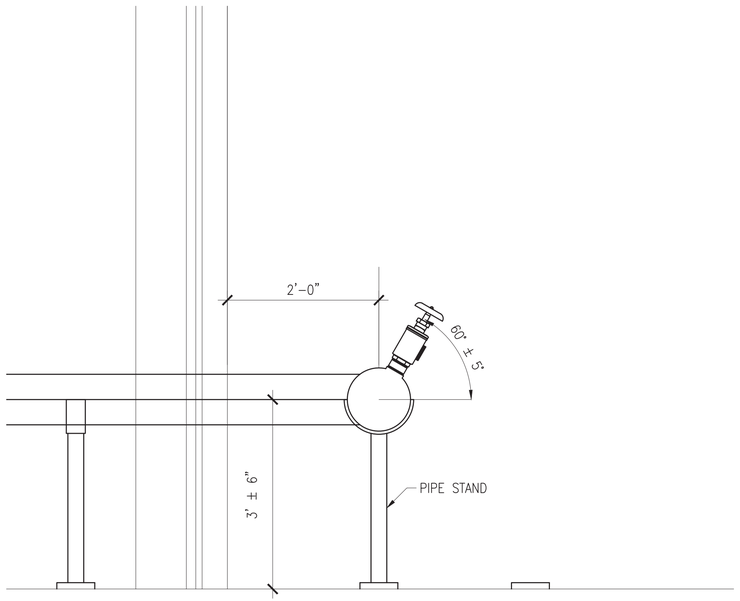

TEST HEADER SIDE DETAIL

SCALE: 1" = 1' – 0"

A1 / F-501

FIRE PUMP RUN SIGNAGE

SCALE: NONE

C3 / F-501

PUMP SCHEDULE

	RATED CAPACITY	RATED PRESSURE	SPEED	PUMP MAXIMUM BREAK HORSEPOWER	MOTOR HORSE POWER	STARTING METHOD	VOLTAGE	PHASE	CYCLE	FULL LOAD CURRENT	LOCKED ROTOR CURRENT	MOTOR DESIGNATION
FIRE PUMP 01	1250 GPM	100 PSI	1750 RPM	118 MBHP	125 HP	SOLID STATE SOFT START, REDUCED VOLTAGE	460 VAC	3	60 Hz	168 AMPS	908 AMPS	G
JOCKEY PUMP	12.5 GPM	110 PSI	3450 RPM		2 HP	ACROSS LINE	460 VAC	3	60 Hz	3.4 AMPS		

SPRINKLER DATA - NON-STORAGE AREAS & ABOVE CEILINGS IN LOW BAY STORAGE AREAS

FM HAZARD CLASSIFICATION	BASIC DESIGN AREA	DENSITY	OUTSIDE HOSE STREAM DEMAND
HC1	1,500–SQFT	0.10–GPM/SQFT	250–GPM
HC2	2,500–SQFT	0.20–GPM/SQFT	250–GPM

SPRINKLER DATA - WAREHOUSE AREAS

SPRINKLER TYPE	PENDENT ESFR
NOMINAL k–FACTOR	16.8
MINIMUM OPERATING PRESSURE	52 PSI
COMMODITY CLASSIFICATION	CLASS IV
MAXIMUM CEILING HEIGHT	40 FEET
MAXIMUM STORAGE HEIGHT	35 FEET

PROJECT FLOW TEST DATA

DATE OF FLOW TESTING:	05 JULY 2011
STATIC PRESSURE:	55–PSI
RESIDUAL PRESSURE:	53–PSI, WHILE FLOWING 1,100 GPM

APPLY FLOW TEST DATA TO POINT OF CONNECTION OF NEW 10–INCH LINE TO THE EXISTING 8–INCH LOOPED WATER MAIN (SEE SHEET C–xxx FOR LOCATION).

GRAPHIC SCALE

1" = 1'–0"

0 6" 1' 2'

APPR | DATE | DESCRIPTION | SYM

NAVFAC

SEAL

A/E INFO

APPROVED
FOR RALPH DEAL 3/23/15
FOR COMMANDER NAVFAC

ACTIVITY
SATISFACTORY TO DATE 3-24-15
DES DPS | DRW DPS | CHK SLW
<<PM/DM>> R. M. RUSSELL
BRANCH MANAGER DPS
ENGR DIRECTOR Ralph D. Deal
CUSTOMER

DEPARTMENT OF THE NAVY
NAVAL FACILITIES ENGINEERING COMMAND
PWD PORTSMOUTH

NAVAL FACILITIES ENGINEERING COMMAND – MID ATLANTIC
NORFOLK NAVAL SHIPYARD – PORTSMOUTH, VIRGINIA

NORFOLK NAVAL SHIPYARD
PORTSMOUTH, VIRGINIA

B260 EXTENSIVE REPAIRS

FIRE SPRINKLER DETAILS

SCALE: AS NOTED
EPROJECT NO.: 1146716
CONSTR. CONTR. NO.: N40085–15–R–0018
NAVFAC DRAWING NO.: 12682025
SHEET 71 OF 118

F-501

DRAWFORM REVISION: 10 MARCH 2009

FILE NAME: P:\VA\NNSY\Buildings\02601\2011_1146716_Nuclear Materials Wise Repairs\B_Design\Drawings\BLDG2601-1146716-F-501.dwg LAYOUT NAME: F-501 PLOTTED: Monday, March 23, 2015 – 3:43pm USER: douglas.stultz

PLUMBING ABBREVIATIONS

AC	ABOVE CEILING
ADA	AMERICANS WITH DISABILITIES ACT
AFF	ABOVE FINISHED FLOOR
AP	ACCESS PANEL
APPROX.	APPROXIMATE
BF	BELOW FLOOR
BG	BELOW GRADE
BFP	BACKFLOW PREVENTER
BLDG	BUILDING
BTUH	BRITISH THERMAL UNIT PER HOUR
CB	CATCH BASIN
CLNG	CEILING
CO	CLEANOUT
CONC	CONCRETE
CPVC	POLYVINYL CHLORIDE
CW	COLD WATER
DN	DOWN
DHW	DOMESTIC HOT WATER
DCW	DOMESTIC COLD WATER
DW	DOMESTIC WATER
DWG	DRAWING
DWV	DRAIN, WASTE, VENT
(E)	EXISTING
EA	EACH
EL	ELEVATION
EQUIP	EQUIPMENT
ETR	EXISTING TO REMAIN
EWC	ELECTRIC WATER COOLER
F	FAHRENHEIT
FCO	FLOOR CLEANOUT
FD	FLOOR DRAIN
FLR	FLOOR
FT	FEET
FW	FRESHWATER
GAL	GALLON
GALV.	GALVANIZED
GPH	GALLONS PER HOUR
GPM	GALLONS PER MINUTE
HB	HOSE BIBB
HC	HANDICAP ACCESSIBLE
HP	HORSEPOWER
HW	HOT WATER
HWR	DOMESTIC HOT WATER RECIRC
HZ	HERTZ
INV	INVERT ELEVATION
IWC	INCHES OF WATER COLUMN
KS	KITCHEN SINK
LAV	LAVATORY

MAX	MAXIMUM
MIN	MINIMUM
NIC	NOT IN CONTRACT
NTS	NOT TO SCALE
PH	PHASE
PSI	POUNDS PER SQUARE INCH
PVC	POLYVINYL CHLORIDE
RL	ROOF LEADER
RD	ROOF DRAIN
RPM	REVOLUTIONS PER MINUTE
SAN	SANITARY
SAN SEW	SANITARY SEWER
SEW	SEWER
SH	SHOWER
SIM	SIMILAR
SS	SERVICE SINK
TYP	TYPICAL
UON	UNLESS OTHERWISE NOTED
UR	URINAL
V	VENT
VS	VENT STACK
VTR	VENT THRU ROOF
W	WASTE
WC	WATER CLOSET
WCO	WALL CLEANOUT
WHA	WATER HAMMER ARRESTOR
WS	WASTE STACK
°	DEGREE
ø	DIAMETER

PLUMBING LEGEND

- DOMESTIC COLD WATER PIPING (DCW)
- DOMESTIC HOT WATER PIPING (DHW)
- SAN — SOIL, WASTE, OR SANITARY SEWER PIPING (SAN)
- VENT PIPING (V)
- DOWNWARD SLOPE
- GATE VALVE
- BALL VALVE
- CHECK VALVE
- TEMPERATURE AND PRESSURE RELIEF VALVE
- UNION
- HOSE BIBB (HB)
- EXTERIOR WALL HYDRANT (WH)
- PIPE REDUCER
- CLEANOUT
- WATER HAMMER ARRESTOR (PDI FIXTURE UNIT SIZING)
- VENT THRU ROOF (VTR)
- P–# — PLUMBING FIXTURE MARK (SEE SCHEDULE ON SHEET P–601)
- WH–# — WATER HEATER MARK (SEE SCHEDULE ON SHEET P–601)
- PIPE TURNING DOWN
- PIPE TURNING UP
- HEAVY DASHED LINE WEIGHT INDICATES EXISTING ITEM TO REMOVE, REFER TO DEMOLITION NOTES.
- LIMIT OF DEMOLITION
- POINT OF CONNECTION – NEW TO EXISTING

GENERAL PLUMBING NOTES

1. THESE GENERAL PLUMBING NOTES APPLY TO ALL THE PLUMBING DRAWINGS IN THIS SET. SHEET SPECIFIC NOTES ARE INDICATED ON EACH SHEET UNDER GENERAL SHEET NOTES.
2. INSTALL ALL EQUIPMENT PER MANUFACTURER'S INSTRUCTIONS.
3. PATCH ALL HOLES FROM REMOVAL OF PIPING OR EQUIPMENT TO MATCH ADJACENT CONSTRUCTION.
4. PROVIDE ALL MATERIALS AND EQUIPMENT AND PERFORM ALL LABOR REQUIRED TO INSTALL COMPLETE AND OPERABLE PLUMBING SYSTEMS AS INDICATED ON THE DRAWINGS, SPECIFIED AND AS REQUIRED BY CODE.
5. PROVIDE ALL PLUMBING FIXTURES AND EQUIPMENT WITH ACCESSIBLE STOPS.
6. FIELD VERIFY ALL DIMENSIONS.
7. UNLESS INDICATED OTHERWISE, PIPING TO BE REMOVED SHALL INCLUDE ASSOCIATED HANGERS, INSULATION, AND OTHER APPURTENANCES.
8. ALL CLEANOUTS SHALL BE FULL SIZE OF PIPE.
9. ALL PIPING WORK SHALL BE COORDINATED WITH ALL TRADES INVOLVED. OFFSETS IN PIPING AROUND OBSTRUCTIONS AT NO ADDITIONAL COST TO THE GOVERNMENT.
10. ALL PLUMBING VENTS WITHIN A 10'–0" RADIUS OF EXHAUST VENTS SHALL BE EXTENDED TO A HEIGHT OF 2'–0" ABOVE EXHAUST VENT CROWN.
11. SLOPES AND INVERT ELEVATIONS OF ALL INTERIOR PIPING SHALL BE ESTABLISHED BEFORE ANY PIPING IS INSTALLED, IN ORDER THAT PROPER SLOPES WILL BE MAINTAINED. ALL PIPING SHALL BE RUN TO AVOID CONFLICT WITH OTHER TRADES.
12. COORDINATE WITH ARCHITECTURAL WORKING DRAWINGS PRIOR TO ROUGHING–IN PLUMBING FIXTURES.
13. MAKE PROPER HOT AND COLD WATER, WASTE, VENT, AND GAS, ETC PIPING CONNECTIONS TO ALL FIXTURES AND EQUIPMENT EVEN THOUGH ALL BRANCHES, FITTINGS AND CONNECTIONS ARE NOT SHOWN.
14. PROVIDE DEEP SEAL TRAPS FOR ALL FLOOR DRAINS.
15. IT IS THE INTENTION OF THE DRAWINGS TO COVER ALL WORK AND MATERIAL FOR A COMPLETE FIRST CLASS INSTALLATION. ANY EQUIPMENT, PLUMBING FIXTURE, TRIM HARDWARE AND/OR DEVICES USUALLY UTILIZED IN THE CLASS OF WORK, THOUGH NOT SPECIFICALLY MENTIONED OR SHOWN ON THE DRAWINGS, BUT WHICH MAY BE NECESSARY FOR THE SATISFACTORY COMPLETION OF THE WORK (AS DETERMINED BY THE ENGINEER) SHALL BE FURNISHED AND INSTALLED BY THE CONTRACTOR AS PART OF HIS TOTAL WORK.
16. ENTIRE INSTALLATION, INCLUDING MATERIALS, EQUIPMENT, AND WORKMANSHIP, SHALL CONFORM WITH ALL APPLICABLE LAWS, CODES, AND REGULATIONS OF MUNICIPAL, STATE, AND FEDERAL AUTHORITIES, ALSO THE LATEST EDITION OF THE STATE BUILDING CODES, APPLICABLE ASPE STANDARDS AND OTHER REGULATORY BODIES HAVING JURISDICTION OVER THE CLASS OF WORK. WHERE APPLICABLE, MATERIALS AND EQUIPMENT SHALL HAVE STAMPS OR SEALS OF ARI, ASME, UL, OR ASTM. THE CONTRACTOR SHALL MAKE TESTS FOR ACCEPTANCE AND APPROVAL BY CODE AND THE REQUIREMENTS OF APPLICABLE REGULATORY AGENCIES. REQUIRED TESTS SHALL BE PERFORMED IN THE PRESENCE OF THE GOVERNMENT UNLESS OTHERWISE WAIVED IN WRITING.
17. THE CONTRACTOR SHALL OBTAIN AND PAY FOR ALL PERMITS, LICENSES, DOCUMENTS, AND SERVICES RELATED TO INSTALLATION OF THE WORK.
18. THE CONTRACTOR SHALL COORDINATE HIS WORK WITH OTHER TRADES IN ORDER TO RESOLVE ANY CONFLICTS THAT MIGHT ARISE DUE TO THE LOCATION OF EQUIPMENT OR THE USE OF THE SPACE.
19. THE CONTRACTOR SHALL GUARANTEE ALL WORK FOR A PERIOD OF ONE YEAR FROM DATE OF SUBSTANTIAL COMPLETION.
20. RUN ALL PIPING CONCEALED ABOVE CEILING OR IN WALLS OR CHASES UNLESS OTHERWISE NOTED.
21. EXISTING PIPE AND EQUIPMENT SIZES NOTED ARE FOR THE CONVENIENCE OF THE CONTRACTOR ONLY AND ARE NOT WARRANTED TO BE CORRECT. THE CONTRACTOR SHALL FIELD VERIFY ALL EXISTING PIPE AND EQUIPMENT SIZES AND THEIR RESPECTIVE LOCATIONS BEFORE PROCEEDING WITH ANY ASSOCIATED WORK.
22. CUT OPENINGS, AS REQUIRED, IN THE EXISTING CONSTRUCTION FOR THE INSTALLATION OF PIPING AND EQUIPMENT. PATCH AND REPAIR TO MATCH THE EXISTING ADJACENT CONSTRUCTION. OPENINGS IN EXISTING CONCRETE MASONARY CONSTRUCTION SHALL BE SAW CUT.
23. LAYOUT OF PIPING IS DIAGRAMMATIC. RUN ALL EXPOSED PIPING AS HIGH AS POSSIBLE UNLESS OTHERWISE NOTED. ALLOW FOR RISES, DROPS, AND OFFSETS AS REQUIRED.

APPR	DATE	DESCRIPTION	SYM

NAVFAC

SEAL

A/E INFO

APPROVED
FOR RALPH DEAL 2/23/15
FOR COMMANDER NAVFAC

ACTIVITY
SATISFACTORY TO DATE 3-24-15

DES	JMA	DRW	JMA	CHK	LDH

<<PM/DM>> R. M. RUSSELL
BRANCH MANAGER
ENGR DIRECTOR Ralph D. Deal
CUSTOMER

DEPARTMENT OF THE NAVY
NAVAL FACILITIES ENGINEERING COMMAND
PWD PORTSMOUTH

NAVAL FACILITIES ENGINEERING COMMAND – MID ATLANTIC
NORFOLK NAVAL SHIPYARD – PORTSMOUTH, VIRGINIA

NORFOLK NAVAL SHIPYARD
PORTSMOUTH, VIRGINIA

B260 EXTENSIVE REPAIRS

PLUMBING SYMBOLS, LEGENDS, ABBREVIATIONS & NOTES

SCALE:	AS NOTED
EPROJECT NO.:	1146716
CONSTR. CONTR. NO.	N40085–15–R–0018
NAVFAC DRAWING NO.	12682026
SHEET	72 OF 118

P-001

DRAWFORM REVISION: 10 MARCH 2009

FILE NAME: P:\VA\VNSY\Buildings\0260\2011_1146716_Nuclear Materials Whse Repairs\B_Design\Drawings\BLDG260–1146716–P–001 – 602.dwg LAYOUT NAME: P–001 PLOTTED: Tuesday, March 17, 2015 – 10:58am USER: Jay.Ashley

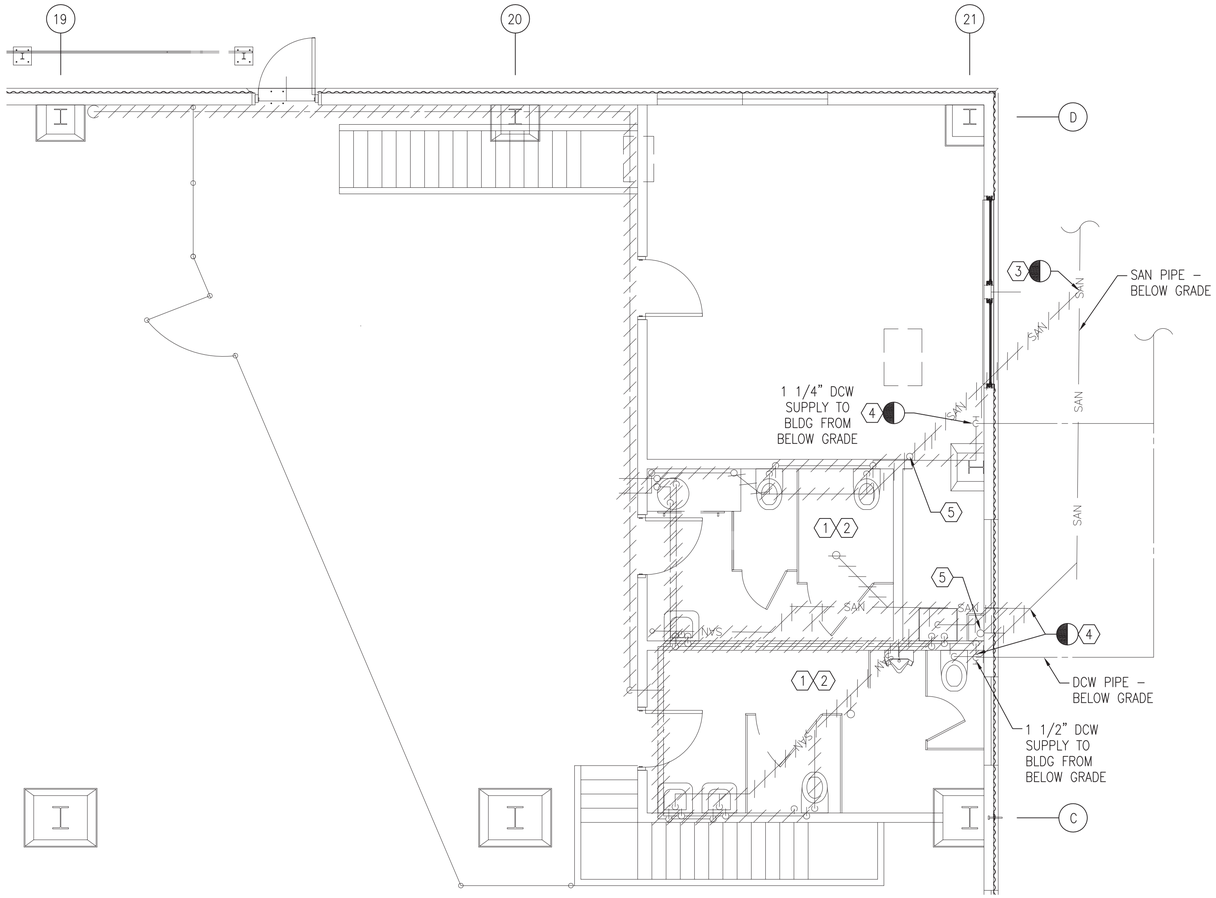

PARTIAL FIRST FLOOR PLAN

SCALE: 1/4" = 1'-0"

PLAN NORTH

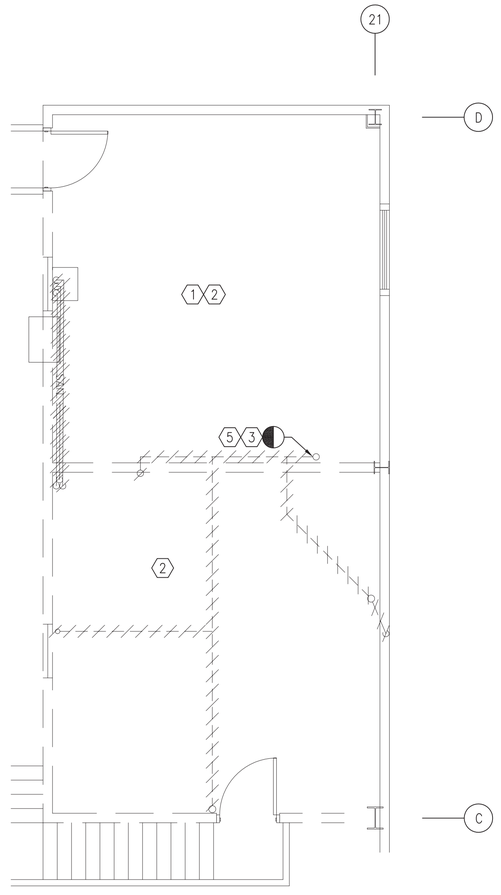

SECOND FLOOR PLAN

SCALE: 1/4" = 1'-0"

PLAN NORTH

KEY PLAN

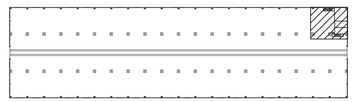

PLAN NORTH

GENERAL NOTES

1. THESE DRAWINGS ARE BASED ON EXISTING DRAWINGS AND LIMITED FIELD INVESTIGATION. THE DRAWINGS ARE DIAGRAMMATIC AND INDICATE THE GENERAL ARRANGEMENT OF EXISTING PLUMBING SYSTEM COMPONENTS. IT IS NOT THE INTENT OF THE DRAWINGS TO INDICATE EACH AND EVERY FITTING, OFFSET, VALVE OR INCIDENTAL ITEM OF DEMOLITION REQUIRED TO COMPLETE THE WORK. THE CONTRACTOR SHALL VISIT THE SITE AND ACQUAINT HIMSELF/HERSELF WITH THE EXISTING DIMENSIONS AND CONDITIONS PRIOR TO ORDERING MATERIALS, FABRICATIONS, OR BEGINNING CONSTRUCTION. REPORT ANY DISCREPANCIES TO THE CONTRACTING OFFICER.
2. CONTRACTOR SHALL PROVIDE AN OUTAGE REQUEST TO CONTRACTING OFFICER PRIOR TO INTERRUPTING UTILITIES.
3. THE CONTRACTOR SHALL EXERCISE EXTREME CAUTION DURING DEMOLITION/EXCAVATION. LOCATION OF THE KNOWN EXISTING UTILITIES IS APPROXIMATE. THE CONTRACTOR SHALL PHYSICALLY VERIFY THE LOCATION, SERVICE, SOURCE, AND ELEVATION OF ALL INDICATED EXISTING UTILITIES TO THE GREATEST EXTENT POSSIBLE PRIOR TO STARTING THE DEMOLITION AND/OR EXCAVATION PROCESS. THE CONTRACTOR SHALL ALSO SCAN THE CONSTRUCTION SITE WITHIN THE NECESSARY LIMITS OF DEMOLITION/EXCAVATION WITH ELECTROMAGNETIC AND SONIC EQUIPMENT IN ORDER TO IDENTIFY THE PRESENCE AND LOCATION OF ALL KNOWN AND UNKNOWN EXISTING UTILITIES PRIOR TO STARTING THE DEMOLITION/EXCAVATION PROCESS. IF ADDITIONAL SUBSURFACE UTILITIES OTHER THAN THOSE INDICATED ARE DISCOVERED AT ANY TIME DURING THE EXECUTION OF WORK OR IF PIPING SHOWN TO BE DEMOLISHED OR REUSED WITHIN THIS CONTRACTING EFFORT PROVIDES SERVICE TO AREAS OUTSIDE THE AREA OF WORK, IT SHALL IMMEDIATELY BE BROUGHT TO THE ATTENTION OF THE CONTRACTING OFFICER.
4. WHERE PIPING IS INDICATED TO BE REMOVED, IT SHALL MEAN COMPLETE REMOVAL OF PIPING, INCLUDING INSULATION, FITTINGS, VALVES, STRAINERS, TRAPS, FLANGES, UNIONS, CONTROL SENSORS AND DEVICES, HANGERS AND MISCELLANEOUS SUPPORTS, AND APPURTENANCES WHICH ARE CONNECTED, FASTENED OR STRAPPED TO THE PIPING SYSTEM, TO THE EXTENT INDICATED. PATCH REMAINING TO MATCH EXISTING CONSTRUCTION IN WALLS.
5. THE CONTRACTOR SHALL EXERCISE DUE CAUTION TO PROTECT EXISTING STRUCTURES AND SURROUNDING SURFACES TO REMAIN DURING DEMOLITION AND REPAIR OPERATIONS. ALL EXISTING MATERIALS TO REMAIN THAT ARE DAMAGED OR OTHERWISE DISTURBED BY THE CONTRACTOR'S ACTIVITIES SHALL BE PATCHED AND REPAIRED, OR REPLACED AT THE CONTRACTOR'S EXPENSE AS DIRECTED BY THE CONTRACTING OFFICER TO MATCH EXISTING ADJACENT MATERIALS. ALL REPAIRS SHALL BE IMPERCEPTIBLE.
6. THE CONTRACTOR SHALL REMOVE AND DISPOSE OF ALL ASBESTOS/LEAD CONTAINING AND CONTAMINATED MATERIALS ENCOUNTERED OR PRODUCED AS THE RESULT OF DEMOLITION OR NEW WORK, INCLUDING PIPE PENETRATIONS AND SUPPORTS, AND SHALL FURNISH AND INSTALL ASBESTOS/LEAD FREE MATERIALS WHERE INDICATED. LABEL NEW INSULATION "ASBESTOS FREE". REMOVE AND DISPOSE ASBESTOS/LEAD CONTAINING AND CONTAMINATED MATERIALS AS PER SPECIFICATIONS. SEE SHEET G-003 FOR ADDITIONAL REQUIREMENTS.

(X) DEMO WORK NOTES

1. DEMO PLUMBING FIXTURES ALONG WITH ASSOCIATED COMPONENTS.
2. DEMO ALL DCW, DHW, SAN, AND VENT PIPE FROM FIXTURE TO LIMITS OF DEMOLITION.
3. DEMO PIPE FITTING. REPAIR REMAINING PIPE.
4. DEMO PIPE TO FITTING. FITTING TO REMAIN FOR CONNECTION TO NEW WORK.
5. SECTION OF 4"ø VENT PIPE ABOVE SECOND FLOOR TO REMAIN FOR REUSE, SEE SHEET P-101, NEW WORK NOTE 5.

GRAPHIC SCALE

1/4" = 1'-0"

0 2' 4' 8'

APPR	DATE	DESCRIPTION	SYM

NAVFAC

SEAL

A/E INFO

APPROVED
FOR RALPH DEAL 2/23/15
FOR COMMANDER NAVFAC

ACTIVITY
SATISFACTORY TO DATE 2-23-15
DES JMA DRW JMA CHK LDH
<<PM/DM>> R. M. RUSSELL
BRANCH MANAGER
ENGR DIRECTOR Ralph D. Deal
CUSTOMER

DEPARTMENT OF THE NAVY
NAVAL FACILITIES ENGINEERING COMMAND
PWD PORTSMOUTH
NAVAL FACILITIES ENGINEERING COMMAND ~ MID ATLANTIC
NORFOLK NAVAL SHIPYARD - PORTSMOUTH, VIRGINIA
NORFOLK NAVAL SHIPYARD
PORTSMOUTH, VIRGINIA

B260 EXTENSIVE REPAIRS

PARTIAL FLOOR PLANS – PLUMBING DEMOLITION

SCALE: AS NOTED
EPROJECT NO: 1146716
CONSTR. CONTR. NO: N40085-15-R-0018
NAVFAC DRAWING NO: 12682027
SHEET 73 OF 118

PD101

DRAWFORM REVISION: 10 MARCH 2009

FILE NAME: P:\VA\NNSY\Buildings\V0260\2011_1146716_Nuclear Materials Wise Repairs\B_Design\Drawings\BLDG260-1146716-PD101.dwg LAYOUT NAME: PD101 PLOTTED: Tuesday, March 17, 2015 - 11:15am USER: JayAshley

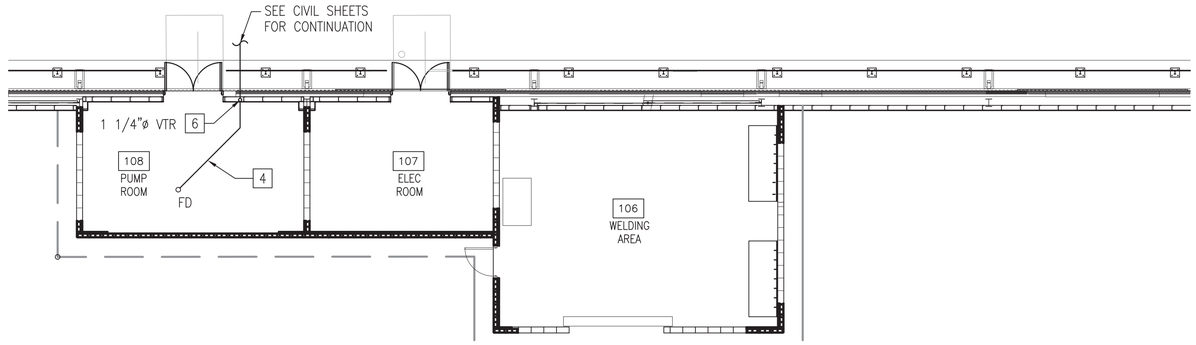

PARTIAL FLOOR PLAN

SCALE: 1/8" = 1'-0"

PLAN NORTH

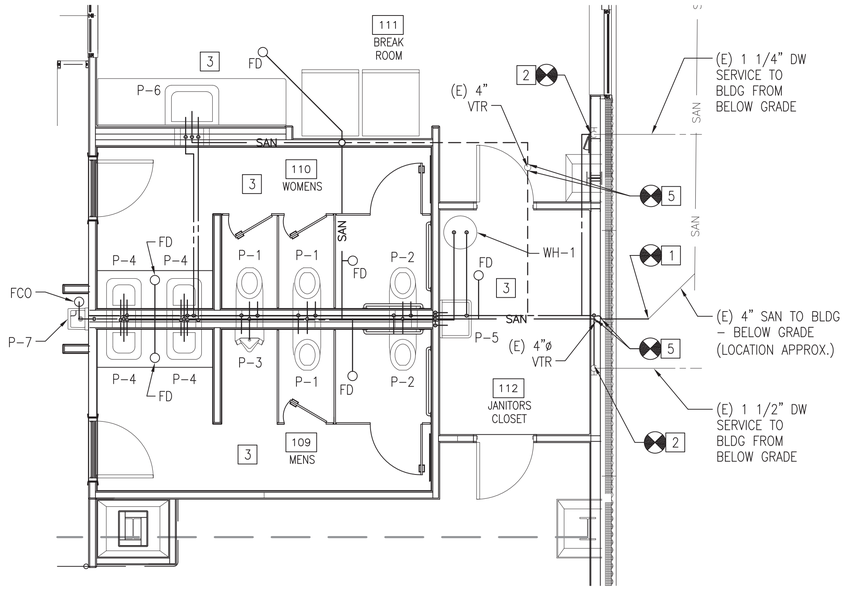

PARTIAL FLOOR PLAN

SCALE: 1/4" = 1'-0"

PLAN NORTH

KEY PLAN

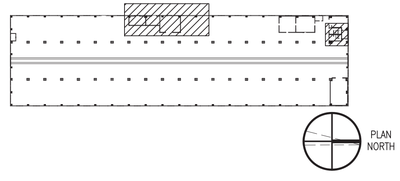

PLAN NORTH

GENERAL NOTES

1. FIELD VERIFY ALL DIMENSIONS PRIOR TO INSTALLATION OF ALL EQUIPMENT, PIPING, AND ASSOCIATED SUPPORTS.
2. PROVIDE SLEEVE AND SEAL AT NEW PIPING PENETRATIONS IN WALL, ROOF, FLOOR, AND CEILING AS PER SPECIFICATIONS.
3. PROVIDE HANGERS AND SUPPORTS FOR PIPING AS REQUIRED.
4. COORDINATE ALL PIPING WITH STRUCTURAL FRAMING MEMBERS.
5. PROVIDE INSULATION ON NEW DCW AND DHW PIPING AS SPECIFIED.
6. SEE PIPING SCHEMATICS ON SHEETS P-601 AND P-602 FOR PIPE SIZES.

X NEW WORK NOTES

1. PROVIDE CONNECTION OF NEW SAN PIPE TO EXISTING SAN PIPE. PROVIDE SAN PIPE AS SHOWN FROM POINT OF CONNECTION.
2. PROVIDE CONNECTION OF NEW DCW PIPE TO EXISTING DW SERVICE PIPE. PROVIDE DCW AND DHW PIPE AS SHOWN FROM POINT OF CONNECTION. PROVIDE ACCESS DOOR IN WALL AS SPECIFIED TO ACCESS VALVE. PROVIDE DIELECTRIC JOINT AT CONNECTION BETWEEN FERROUS AND NON-FERROUS PIPE.
3. PROVIDE PLUMBING FIXTURES AS SHOWN, ALONG WITH ASSOCIATED PIPING, VALVES, AND FAUCETS.
4. PROVIDE UNDERFLOOR AND BELOW GRADE SAN DRAINAGE PIPING AS SHOWN.
5. PROVIDE CONNECTION OF NEW VENT PIPING TO EXISTING VENT PIPE.
6. PROVIDE VENT PIPE AND VTR AS SHOWN.

GRAPHIC SCALE

1/16" = 1'-0" 0 8' 16' 32'

1/4" = 1'-0" 0 2' 4' 8'

APPR	DATE	DESCRIPTION	SYM

NAVFAC

SEAL

A/E INFO

APPROVED
FOR RALPH DEAL 3/23/15
FOR COMMANDER NAVFAC

ACTIVITY
SATISFACTORY TO DATE 3-23-15

DES	JMA	DRW	JMA	CHK	LDH

<<PM/DM>> R. M. RUSSELL
BRANCH MANAGER
ENGR DIRECTOR Ralph D. Deal
CUSTOMER

DEPARTMENT OF THE NAVY
NAVAL FACILITIES ENGINEERING COMMAND
PWD PORTSMOUTH

NAVAL FACILITIES ENGINEERING COMMAND – MID ATLANTIC
NORFOLK NAVAL SHIPYARD – PORTSMOUTH, VIRGINIA

NORFOLK NAVAL SHIPYARD
PORTSMOUTH, VIRGINIA

B260 EXTENSIVE REPAIRS

PARTIAL FLOOR PLANS – PLUMBING NEW WORK

SCALE:	AS NOTED
EPROJECT NO.:	1146716
CONSTR. CONTR. NO.	N40085-15-R-0018
NAVFAC DRAWING NO.	12682028
SHEET	74 OF 118

P-101

DRAWFORM REVISION: 10 MARCH 2009

FILE NAME: P:\VA\VNSY\Buildings\0260\2011_1146716_Nuclear Materials Wise Repairs\B_Design\Drawings\BLDG260-1146716-P-001 - 602.dwg LAYOUT NAME: P-101 PLOTTED: Tuesday, March 17, 2015 - 11:02am USER: Jay Ashley

PLUMBING FIXTURE SCHEDULE

TAG	FIXTURE	SAN	VENT	CW	HW	REMARKS
P–1	WATER CLOSET	4"	2"	1 ½"	–	STANDARD, WALL MOUNT
P–2	WATER CLOSET	4"	2"	1 ½"	–	ACCESSIBLE, WALL MOUNT
P–3	URINAL	2"	2"	¾"	–	
P–4	LAVATORY	1 ¼"	1 ½"	½"	½"	PUBLIC, ACCESSIBLE
P–5	SERVICE SINK	1 ½"	2"	½"	½"	
P–6	KITCHEN SINK	1 ½"	2"	½"	½"	
P–7	WATER FOUNTAIN	1 ¼"	1 ½"	½"	–	PUBLIC, STANDARD/ACCESSIBLE
FD	FLOOR DRAIN	2"	–	–	–	

ELECTRIC WATER HEATER SCHEDULE

TAG	STORAGE CAPACITY (GAL.)	RECOVERY RATE @ 90°F TEMP. RISE (GAL./HR)	NUMBER OF ELEMENTS	VOLTS/ PHASE	ELEMENT POWER (kW)	REMARKS
WH–1	40	20	2	208/1	4.5	–

NOTES:
1. WATER HEATING IS BASED ON NON–SIMULTANEOUS ELEMENT OPERATION.
2. WATER HEATER SHALL COMPLY WITH ASHRAE 90.1 PERFORMANCE REQUIREMENTS.
3. PROVIDE AN OVERFLOW DRAINPAN UNDER THE WATER HEATER.
4. PROVIDE A RELIEF VALVE DISCHARGE PIPE ROUTED TO DISCHARGE INTO THE OVERFLOW DRAINPAN.

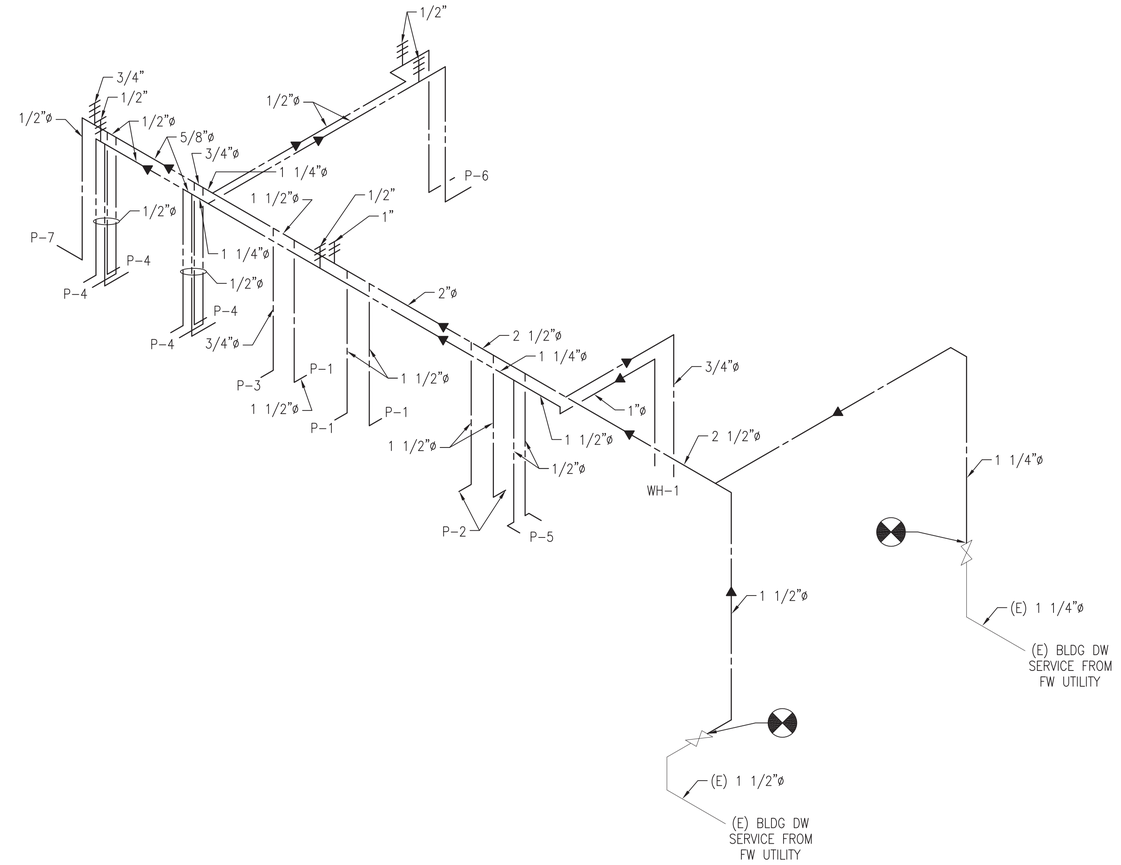

DOMESTIC WATER PIPING SCHEMATIC

SCALE: NTS

NOTES:
1. DOMESTIC WATER PIPING SHALL BE COPPER.
2. PROVIDE INSULATION ON DOMESTIC WATER PIPING AS SPECIFIED.
3. DISTRIBUTION PIPING TO RUN ABOVE SUSPENDED CEILING OR WITHIN WALL CAVITY U.O.N.

APPR | DATE | DESCRIPTION | SYM

NAVFAC

SEAL

A/E INFO

APPROVED
FOR RALPH DEAL 2/23/15
FOR COMMANDER NAVFAC

ACTIVITY
SATISFACTORY TO DATE 3-23-15

DES	JMA	DRW	JMA	CHK	LDH
<<PM/DM>>	R. M. RUSSELL				
BRANCH MANAGER					
ENGR DIRECTOR	Ralph D. Deal				
CUSTOMER					

DEPARTMENT OF THE NAVY
NAVAL FACILITIES ENGINEERING COMMAND
PWD PORTSMOUTH

NAVAL FACILITIES ENGINEERING COMMAND ~ MID ATLANTIC
NORFOLK NAVAL SHIPYARD – PORTSMOUTH, VIRGINIA

NORFOLK NAVAL SHIPYARD
PORTSMOUTH, VIRGINIA

B260 EXTENSIVE REPAIRS

PLUMBING PIPING SCHEMATIC

SCALE:	AS NOTED
EPROJECT NO.:	1146716
CONSTR. CONTR. NO.	N40085–15–R–0018
NAVFAC DRAWING NO.	12682029
SHEET	75 OF 118

P-601

DRAWFORM REVISION: 10 MARCH 2009

FILE NAME: P:\VA\NNSY\Buildings\0260\2011_1146716_Nuclear Materials Whse Repairs\B_Design\Drawings\BLD0260–1146716–P–001 – 602.dwg LAYOUT NAME: P–601 PLOTTED: Tuesday, March 17, 2015 – 11:03am USER: Jay.Ashley

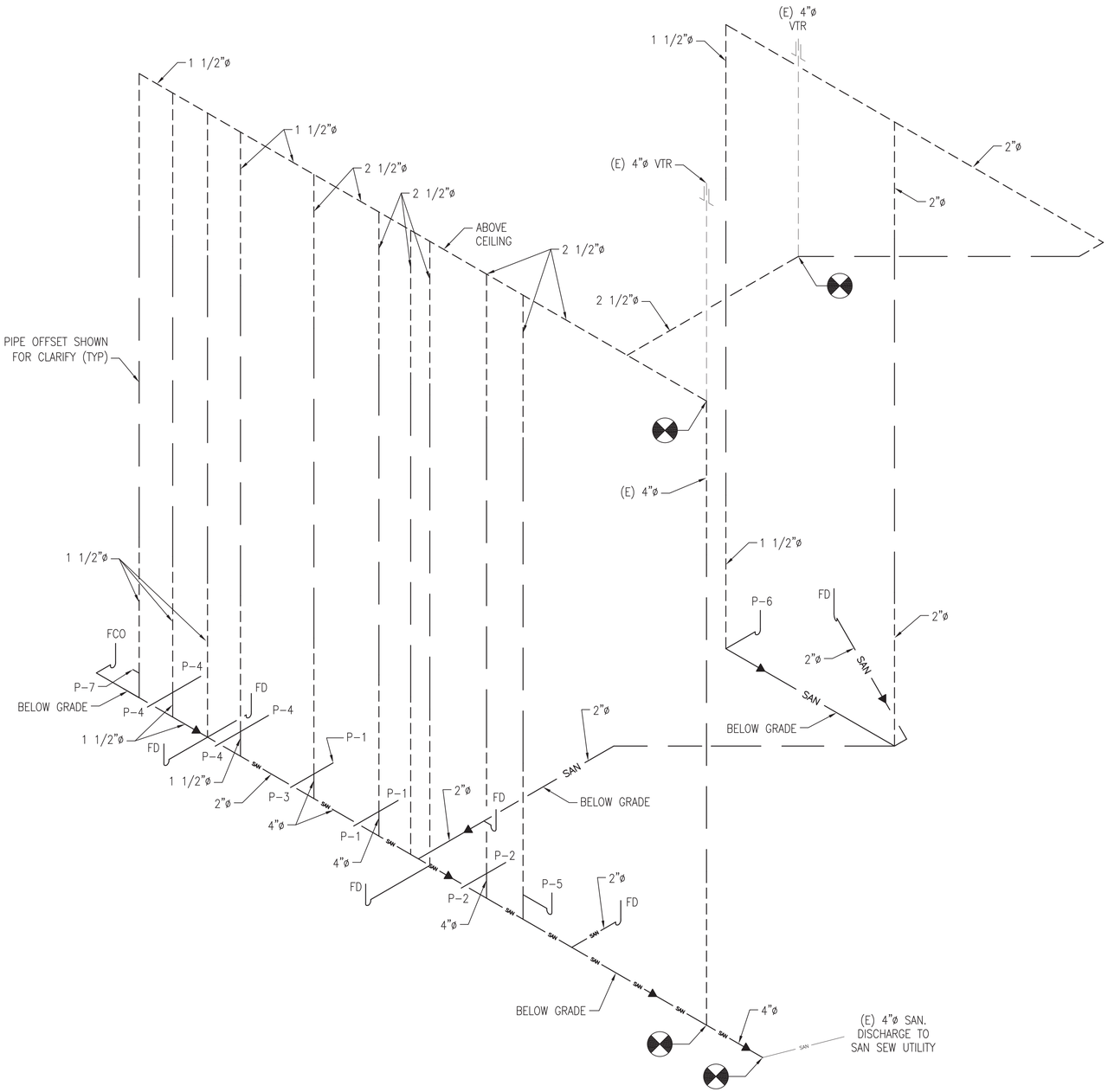

RESTROOMS

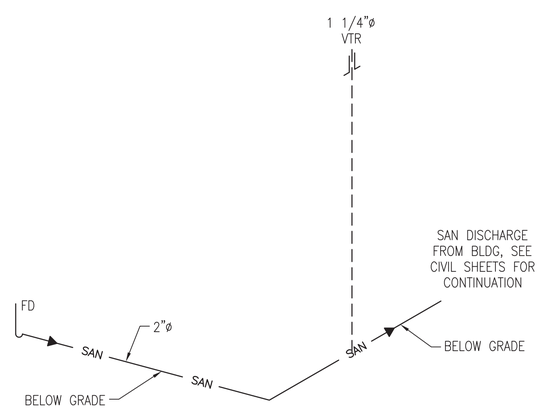

PUMP ROOM

SANITARY AND VENT PIPING SCHEMATIC

SCALE: NTS

NOTES:
1. SLOPE SAN PIPE ¼" PER 1' IN DIRECTION OF FLOW.
2. SAN PIPING TO BE DWV PVC ABOVE GRADE AND CAST IRON UNDERFLOOR OR BELOW GRADE.
3. SIZE FLOORDRAINS AND CLEANOUTS TO MATCH CONNECTING PIPE SIZE OR AS NOTED.
4. WASTE VENT PIPE TO BE CPVC OR AS NOTED.
5. SLOPE VENT PIPING IN DIRECTION OF FLOW OR TOWARDS DRAINAGE RISER, AS REQUIRED.
6. PROVIDE P-TRAPS AT FIXTURES AS REQUIRED.

SYM	DESCRIPTION	DATE	APPR

NAVFAC

SEAL

A/E INFO

APPROVED
FOR RALPH DEAL 3/23/15
FOR COMMANDER NAVFAC

ACTIVITY

SATISFACTORY TO DATE 3-23-15

DES	JMA	DRW	JMA	CHK	LDH

<<PM/DM>> R. M. RUSSELL
BRANCH MANAGER
ENGR DIRECTOR Ralph D. Deal
CUSTOMER

DEPARTMENT OF THE NAVY
NAVAL FACILITIES ENGINEERING COMMAND
PWD PORTSMOUTH
NAVAL FACILITIES ENGINEERING COMMAND ~ MID ATLANTIC
NORFOLK NAVAL SHIPYARD - PORTSMOUTH, VIRGINIA
NORFOLK NAVAL SHIPYARD
PORTSMOUTH, VIRGINIA
B260 EXTENSIVE REPAIRS
PLUMBING PIPING SCHEMATIC

SCALE:	AS NOTED
EPROJECT NO.:	1146716
CONSTR. CONTR. NO:	N40085-15-R-0018
NAVFAC DRAWING NO.	12682030
SHEET	76 OF 118

P-602

DRAWFORM REVISION: 10 MARCH 2009

FILE NAME: P:\VA\NNSY\Buildings\0260\2011_1146716_Nuclear Materials Wise Repairs\B_Design\Drawings\BLD0260-1146716-P-001 - 602.dwg LAYOUT NAME: P-602 PLOTTED: Tuesday, March 17, 2015 - 11:04am USER: Jay.Ashley

MECHANICAL LEGEND

- GATE VALVE
- GLOBE VALVE
- CHECK VALVE
- BALL VALVE
- PRESSURE REDUCING VALVE
- 2-WAY CONTROL VALVE
- RELIEF VALVE
- MANUAL AIR VENT
- AUTOMATIC AIR VENT
- VACUUM BREAKER
- STEAM TRAP
- WYE STRAINER
- VALVE IN VERT. PIPING
- STRAINER W/ BLOWDOWN VALVE
- ECCENTRIC REDUCER
- PIPE REDUCER
- DIRECTION OF FLOW
- UNION
- PRESSURE GAUGE W/ SHUTOFF COCK
  FLANGE
- PIPE CAP
- FLEXIBLE PIPE CONNECTOR
- DOWNWARD DIRECTION OF SLOPED PIPING
- 12x10 RECTANGULAR DUCT DIMENSIONS (INCHES)
- 12"ø ROUND DUCT DIMENSION
- FLEXIBLE ROUND DUCT
- LINEAR DIFFUSER (SIZE AND CFM AS NOTED)
- (T) TEMPERATURE SENSOR
- FS AIRFLOW SENSOR
- PS PRESSURE SENSOR
- MS MANUAL ON-OFF SWITCH
- PIPE ANCHOR WITH SINGLE BELLOWS EXPANSION JOINT, ARROW INDICATES DIRECTION OF EXPANSION
- PIPE ANCHOR WITH DUAL BELLOWS EXPANSION JOINT, ARROW INDICATES DIRECTION OF EXPANSION
- PIPE ANCHOR
- PIPE GUIDE SUPPORT
- ROUND DUCT SECTION TURNED DOWN – POSITIVE PRESSURE
- RECTANGULAR DUCT SECTION TURNED DOWN – POSITIVE PRESSURE
- RECTANGULAR DUCT SECTION TURNED UP – NEGATIVE PRESSURE
- RECTANGULAR DUCT SECTION TURNED DOWN – NEGATIVE PRESSURE

- RECTANGULAR DUCT SECTION TURNED UP – POSITIVE PRESSURE
- RECTANGULAR DUCT SECTION TURNED DOWN – POSITIVE PRESSURE
- RECTANGULAR DUCT SECTION TURNED UP – NEGATIVE PRESSURE
- RECTANGULAR DUCT SECTION TURNED DOWN – NEGATIVE PRESSURE
- DUCTWORK TO BE REMOVED
- DIRECTION OF FLOW
- DUCT TRANSITION
- DUCT ELBOW
- ELBOW W/TURNING VANES
- STANDARD BRANCH
- R RISE IN DUCT
- FLEXIBLE DUCT CONNECTION
- BALANCING DAMPER
- BDD BACKDRAFT DAMPER
- ELECTRIC OPERATED DAMPER
- EOD
- FIRE DAMPER
- CEILING DIFFUSER WITH DIRECTION OF FLOW ARROW, POSITIVE PRESSURE (CFM AS NOTED)
- CEILING GRILLE, NEGATIVE PRESSURE (CFM AS NOTED)
- GRILL OR REGISTER WITH DIRECTION OF FLOW ARROW (SIZE AND CFM AS NOTED)
- L LOUVER, DOOR OR WALL WITH DIRECTION OF FLOW ARROW (SIZE AND CFM AS NOTED)
- UC UNDERCUT DOOR WITH DIRECTION OF FLOW ARROW (CUT AND CFM AS NOTED)
- LIMIT OF DEMOLITION
- POINT OF CONNECTION – NEW TO EXISTING
- X DIRECT DIGITAL CONTROL POINT

MECHANICAL PIPING LEGEND

⁄ ⁄ ⁄	DEMOLISHED PIPE – TO BE REMOVED
—— CA ——	COMPRESSED AIR PIPING
——D——	CONDENSATE DRAIN PIPING
——HPS——	HIGH PRESSURE STEAM PIPING
– – – – –	LOW PRESSURE CONDENSATE PIPING
——LPS——	LOW PRESSURE STEAM PIPING

MECHANICAL ABBREVIATIONS

AD	ACCESS DOOR
AFF	ABOVE FINISHED FLOOR
AP	ACCESS PANEL
APD	AIR PRESSURE DROP
APPROX.	APPROXIMATELY
AHU	AIR HANDLING UNIT
BD	BALANCING DAMPER
BTUH	BRITISH THERMAL UNIT PER HOUR
C	COMMON
CA	COMPRESSED AIR
Cv	LOSS COEFFICIENT
CU	CONDENSING UNIT
CFM	CUBIC FEET PER MINUTE
CLG	CEILING
CND	CONDENSER
COP	COEFFICENT OF PERFORMANCE
COND	CONDENSATE
CRES	CORROSION RESISTANT
DB	DRY BULB
DDC	DIRECT DIGITAL CONTROL
DEG	DEGREE
DX	DIRECT EXPANSION
(E)	EXISTING
EAT	ENTERING AIR TEMPRATURE
EER	ENERGY EFFICIENCY RATIO
EF	EXHAUST FAN
EFF	EFFICIENCY
ELEV.	ELEVATION
ESP	EXTERNAL STATIC PRESSURE
EXH	EXHAUST
F	FAHRENHEIT
FCU	FAN COIL UNIT
FD	FIRE DAMPER
FT	FEET
GPM	GALLONS PER MINUTE
HGT	HEIGHT
HP	HEAT PUMP, HORSEPOWER
HPS	HIGH PRESSURE STEAM
HR	HOUR
HW	HOT WATER
HX	HEAT EXCHANGER
IAW	INCHES OF WATER GAUGE
IWG	IN ACCORDANCE WITH
kW	KILOWATT
LAT	LEAVING AIR TEMPERATURE
LBS	POUNDS
LPS	LOW PRESSURE STEAM
LWT	LEAVING WATER TEMPERATURE
MAX	MAXIMUM
MIN	MINIMUM
NC	NOISE CRITERIA, NORMALLY CLOSED
NO	NUMBER, NORMALLY OPEN
NSY	NORFOLK NAVAL SHIPYARD
OA	OUTSIDE AIR
O.A.T.	OUTSIDE AIR TEMPERATURE
OU	OUTDOOR UNIT
ΔP	CHANGE IN PRESSURE
PH	PHASE
PRS	PRESSURE REDUCING STATION
PRV	PRESSURE REDUCING VALVE
PSI	POUNDS PER SQUARE INCH
PSIG	POUNDS PER SQUARE INCH GAUGE
RA	RETURN AIR
RH	RELATIVE HUMIDITY
RL	REFRIGERANT LIQUID
RS	REFRIGERANT SUCTION
RTU	ROOFTOP UNIT
SA	SUPPLY AIR
SEER	SEASONAL ENERGY EFFICIENCY RATIO
SIM	SIMILAR
SP	STATIC PRESSURE
STM	STEAM
SQ	SQUARE
TEMP.	TEMPERATURE
TYP.	TYPICAL
UH	UNIT HEATER
U.O.N.	UNLESS OTHERWISE NOTED
V	VOLTS
W	WIDTH
WB	WET BULB
WPD	WATER PRESSURE DROP
°	DEGREES
ø	DIAMETER

GENERAL MECHANICAL NOTES

1. THESE GENERAL MECHANICAL NOTES APPLY TO THE ALL MECHANICAL DRAWINGS IN THIS SET. SHEET SPECIFIC NOTES ARE INDICATED ON EACH SHEET UNDER GENERAL SHEET NOTES.
2. PATCH ALL HOLES FROM REMOVAL OF PIPING, DUCTWORK, OR EQUIPMENT TO MATCH ADJACENT CONSTRUCTION.
3. PROVIDE ALL MATERIALS AND EQUIPMENT AND PERFORM ALL LABOR REQUIRED TO INSTALL COMPLETE AND OPERABLE MECHANICAL SYSTEMS AS INDICATED ON THE DRAWINGS, AS SPECIFIED, AND AS REQUIRED BY CODE.
4. INSTALL ALL MECHANICAL EQUIPMENT AND APPURTENANCES IN ACCORDANCE WITH MANUFACTURER'S RECOMMENDATIONS, THESE CONTRACT'S DOCUMENTS, AND APPLICABLE CODES AND REGULATIONS.
5. PROVIDE VIBRATION ISOLATORS FOR ALL MECHANICAL EQUIPMENT TO PREVENT TRANSMISSION OF VIBRATION TO BUILDING STRUCTURE.
6. PROVIDE ACCESS PANELS IN WALLS AND CEILINGS, WHERE REQUIRED, TO SERVE FIRE DAMPERS, VALVES, SMOKE DETECTORS, AND OTHER CONCEALED MECHANICAL EQUIPMENT THAT REQUIRES ROUTINE MAINTENANCE. ACCESS PANELS SHALL BE LARGE ENOUGH TO ALLOW PROPER CLEARANCE FOR ACCESS DOORS.
7. ALL OPENINGS IN FIRE WALLS DUE TO DUCTWORK, PIPING, CONDUIT, ETC., SHALL BE FIRE STOPPED.
8. EXISTING DUCT AND PIPING SIZES INDICATED ARE APPROXIMATE. FIELD VERIFY ALL DIMENSIONS.
9. PROVIDE PIPE SLEEVES FOR ALL PIPING PENETRATIONS THROUGH WALLS AND FLOORS. EACH PIPE SHALL BE SEPARATELY SLEEVED. PROVIDE CONTINUOUS SEALANT JOINT AROUND PIPE SLEEVE, BOTH SIDES OF WALL, WATERTIGHT. PROVIDE ESCUTCHEON PLATES AS SPECIFIED.

GENERAL MECHANICAL DEMOLITION NOTES

1. THESE GENERAL MECHANICAL DEMOLITION NOTES APPLY TO THE ALL MECHANICAL DRAWINGS IN THIS SET. SHEET SPECIFIC NOTES ARE INDICATED ON EACH SHEET UNDER GENERAL SHEET NOTES.
2. THESE DRAWINGS ARE BASED ON EXISTING DRAWINGS AND LIMITED FIELD INVESTIGATION. THE DRAWINGS ARE DIAGRAMMATIC AND INDICATE THE GENERAL ARRANGEMENT OF EXISTING MECHANICAL SYSTEM COMPONENTS. IT IS NOT THE INTENT OF THE DRAWINGS TO INDICATE EACH AND EVERY FITTING, OFFSET, VALVE OR INCIDENTAL ITEM OF DEMOLITION REQUIRED TO COMPLETE THE WORK. THE CONTRACTOR SHALL PERFORM DEMOLITION AS REQUIRED TO COMPLETE THE WORK AS SHOWN AND SPECIFIED.
3. WHERE PIPING IS INDICATED TO BE REMOVED, IT SHALL MEAN COMPLETE REMOVAL OF PIPING, INCLUDING INSULATION, FITTINGS, VALVES, STRAINERS, TRAPS, FLANGES, UNIONS, CONTROL SENSORS AND DEVICES, HANGERS AND MISCELLANEOUS SUPPORTS, AND APPURTENANCES WHICH ARE CONNECTED, FASTENED OR STRAPPED TO THE PIPING SYSTEM, TO THE EXTENT INDICATED. PATCH REMAINING TO MATCH EXISTING WALL CONSTRUCTION.
4. WHERE DUCTWORK IS INDICATED TO BE REMOVED, IT SHALL MEAN COMPLETE REMOVAL OF DUCTWORK, INCLUDING INSULATION, FITTINGS, DAMPERS, AIR EXTRACTORS, SPLITTERS, TURNING VANES, CONTROL SENSORS AND DEVICES, HANGERS AND MISCELLANEOUS SUPPORTS, AND APPURTENANCES WHICH ARE CONNECTED, FASTENED OR STRAPPED TO THE DUCTWORK SYSTEM, TO THE EXTENT INDICATED. PATCH REMAINING TO MATCH EXISTING WALL CONSTRUCTION.
5. WHERE EXISTING EQUIPMENT AND DEVICES ARE INDICATED TO BE REMOVED, IT SHALL MEAN COMPLETE REMOVAL OF EQUIPMENT AND DEVICES, INCLUDING EQUIPMENT FOUNDATIONS AND CURBS, BASES AND SUPPORTS, BRACES, GUYS, BRACKETS, ANCHORS, AND APPURTENANCES WHICH ARE CONNECTED, FASTENED OR STRAPPED TO THE EQUIPMENT AND ITS SUPPORTING ASSEMBLY, TO THE EXTENT INDICATED.
6. RECOVER REFRIGERANT FROM MECHANICAL REFRIGERATION EQUIPMENT TO BE REMOVED IN ACCORDANCE WITH ASHRAE GUIDELINE 3.
7. UNLESS SPECIFICALLY NOTED OTHERWISE, ALL ITEMS OF DEMOLITION SHALL BECOME THE PROPERTY OF THE CONTRACTOR AND SHALL BE DISPOSED OF OFF-SITE.

APPR | DATE | DESCRIPTION | SYM

NAVFAC

SEAL

A/E INFO

APPROVED
FOR RALPH DEAL 2/23/15
FOR COMMANDER NAVFAC

ACTIVITY
SATISFACTORY TO DATE 3-24-15
DES JMA | DRW JMA | CHK LDH
<<PM/DM>> R. M. RUSSELL
BRANCH MANAGER
ENGR DIRECTOR Ralph D. Deal
CUSTOMER

DEPARTMENT OF THE NAVY
NAVAL FACILITIES ENGINEERING COMMAND
PWD PORTSMOUTH

NAVAL FACILITIES ENGINEERING COMMAND – MID ATLANTIC
NORFOLK NAVAL SHIPYARD – PORTSMOUTH, VIRGINIA

NORFOLK NAVAL SHIPYARD
PORTSMOUTH, VIRGINIA

B260 EXTENSIVE REPAIRS

MECHANICAL SYMBOLS, LEGEND, ABBREVIATIONS & NOTES

SCALE: AS NOTED
EPROJECT NO.: 1146716
CONSTR. CONTR. NO.
N40085-15-R-0018
NAVFAC DRAWING NO.
12682031
SHEET 77 OF 118

M-001

DRAWFORM REVISION: 10 MARCH 2009

FILE NAME: P:\VA\VNSY\Buildings\0260\2011_1146716_Nuclear Materials Whse Repairs\B_Design\Drawings\BLDG260-1146716-M-001 - 603.dwg LAYOUT NAME: M-001 PLOTTED: Tuesday, March 17, 2015 - 8:43am USER: JoyAshley

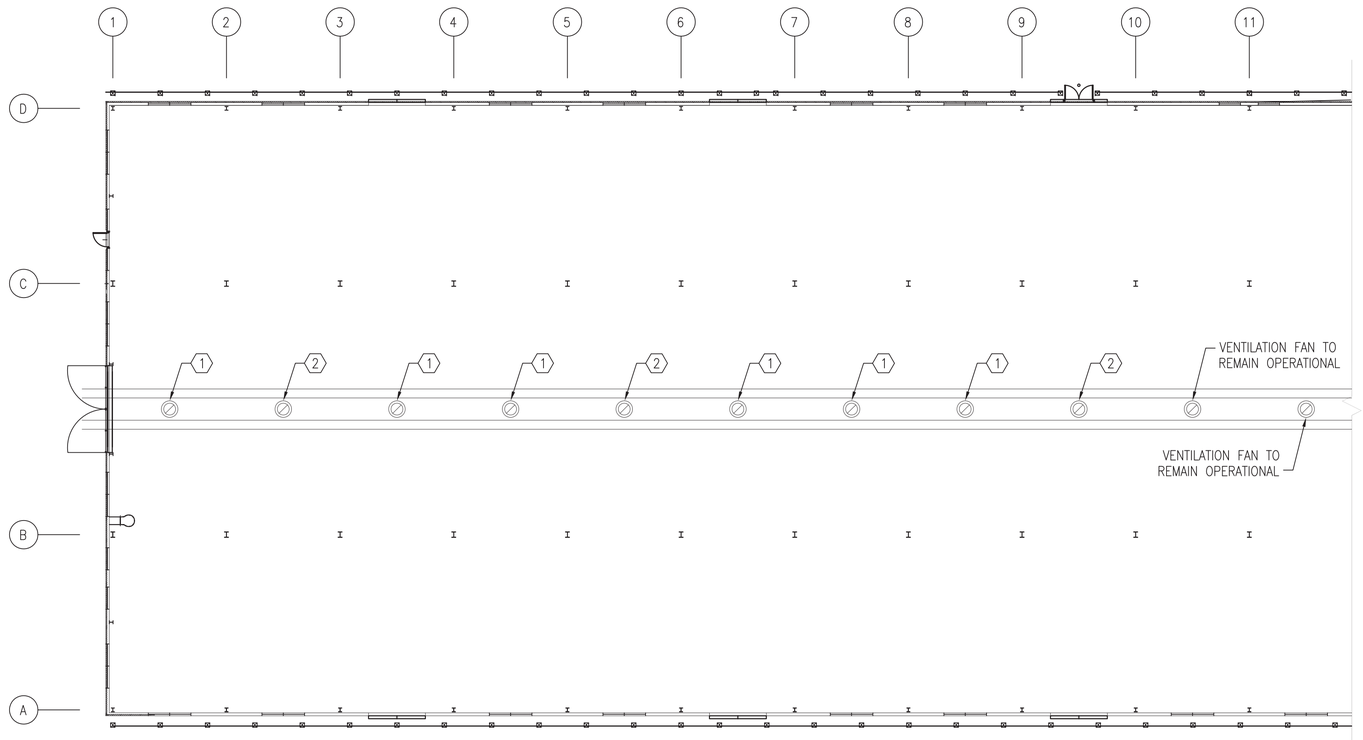

PARTIAL FIRST FLOOR PLAN - SOUTH END

SCALE: 1/16" = 1'-0"

PLAN NORTH

KEY PLAN

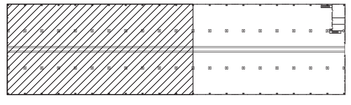

PLAN NORTH

DEMO WORK NOTES

(X)

1. DISABLE ELECTRICAL POWER TO ROOF MOUNTED 30" PROPELLER AXIAL FLOW FAN. DEMO POWER CIRCUIT WIRING FROM CIRCUIT BREAKER TO FAN INCLUDING ON/OFF SWITCH AT COLUMN. CONDUIT AND COMPONENTS WITHIN FAN HOUSING TO REMAIN.

2. MODIFY ROOF MOUNTED 30" PROPELLER AXIAL FLOW FAN INTO ROOF VENT. DISABLE ELECTRICAL POWER TO FAN. DEMO POWER CIRCUIT WIRING FROM CIRCUIT BREAKER TO FAN INCLUDING ON/OFF SWITCH AT COLUMN. CONDUIT TO REMAIN. DEMO FAN COMPONENTS WITHIN FAN HOUSING. DEMO TO INCLUDE DAMPER, FAN MOTOR, AND BLADES. FAN HOUSING TO REMAIN.

GRAPHIC SCALE

1/16" = 1'-0"

0 8' 16' 32'

SYM	DESCRIPTION	DATE	APPR

NAVFAC

SEAL

A/E INFO

APPROVED
for RALPH DEAL 2/23/15
FOR COMMANDER NAVFAC

ACTIVITY
SATISFACTORY TO DATE 3-24-15

DES	JMA	DRW	JMA	CHK	LDH

<<PM/DM>> R. M. RUSSELL
BRANCH MANAGER
ENGR DIRECTOR Ralph D. Deal
CUSTOMER

DEPARTMENT OF THE NAVY
NAVAL FACILITIES ENGINEERING COMMAND
PWD PORTSMOUTH

NAVAL FACILITIES ENGINEERING COMMAND – MID ATLANTIC
NORFOLK NAVAL SHIPYARD – PORTSMOUTH, VIRGINIA

NORFOLK NAVAL SHIPYARD
PORTSMOUTH, VIRGINIA

B260 EXTENSIVE REPAIRS

PARTIAL FLOOR PLAN – MECHANICAL DEMOLITION

SCALE: AS NOTED
EPROJECT NO.: 1146716
CONSTR. CONTR. NO.: N40085-15-R-0018
NAVFAC DRAWING NO.: 12682032
SHEET 78 OF 118

MD101

DRAWFORM REVISION: 10 MARCH 2009

FILE NAME: P:\VA\NNSY\Buildings\0260\2011_1146716_Nuclear Materials Wise Reports\B_Design\Drawings\BLDG260-1146716-MD101 - 103.dwg LAYOUT NAME: MD101 PLOTTED: Tuesday, March 17, 2015 - 10:52am USER: Jay.Ashley

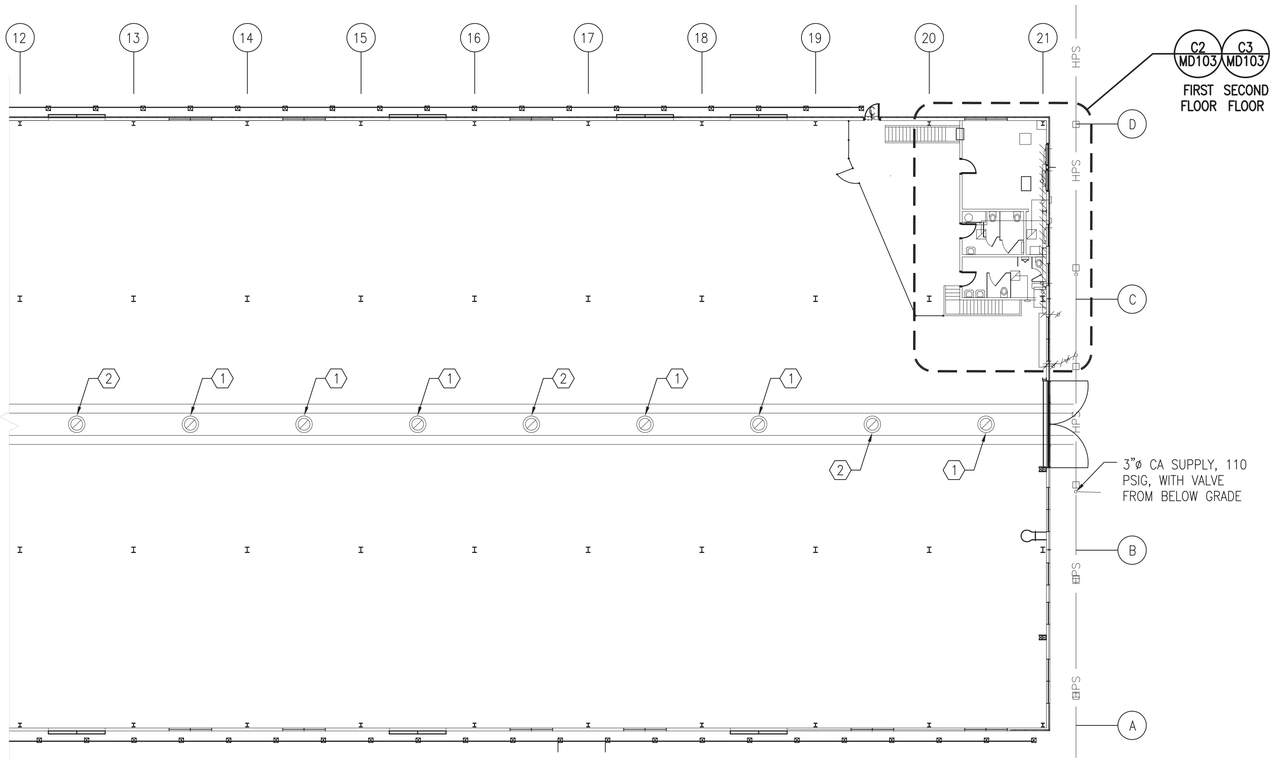

PARTIAL FIRST FLOOR PLAN - NORTH END

SCALE: 1/16" = 1'-0"

PLAN NORTH

KEY PLAN

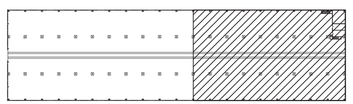

PLAN NORTH

DEMO WORK NOTES

1. DISABLE ELECTRICAL POWER TO ROOF MOUNTED 30" PROPELLER AXIAL FLOW FAN. DEMO POWER CIRCUIT WIRING FROM CIRCUIT BREAKER TO FAN INCLUDING ON/OFF SWITCH AT COLUMN. CONDUIT AND COMPONENTS WITHIN FAN HOUSING TO REMAIN.

2. MODIFY ROOF MOUNTED 30" PROPELLER AXIAL FLOW FAN INTO ROOF VENT. DISABLE ELECTRICAL POWER TO FAN. DEMO POWER CIRCUIT WIRING FROM CIRCUIT BREAKER TO FAN INCLUDING ON/OFF SWITCH AT COLUMN. CONDUIT TO REMAIN. DEMO FAN COMPONENTS WITHIN FAN HOUSING. DEMO TO INCLUDE DAMPER, FAN MOTOR, AND BLADES. FAN HOUSING TO REMAIN.

GRAPHIC SCALE

1/16" = 1'-0"

0 8' 16' 32'

APPR	DATE	DESCRIPTION	SYM

NAVFAC

SEAL

A/E INFO

APPROVED
for RALPH DEAL 2/23/15
FOR COMMANDER NAVFAC

ACTIVITY
3-24-15
SATISFACTORY TO DATE

DES JMA | DRW JMA | CHK LDH

<<PM/DM>> R. M. RUSSELL

BRANCH MANAGER

ENGR DIRECTOR Ralph D. Deal

CUSTOMER

DEPARTMENT OF THE NAVY
NAVAL FACILITIES ENGINEERING COMMAND
PWD PORTSMOUTH
NAVAL FACILITIES ENGINEERING COMMAND – MID ATLANTIC
NORFOLK NAVAL SHIPYARD – PORTSMOUTH, VIRGINIA
NORFOLK NAVAL SHIPYARD
PORTSMOUTH, VIRGINIA

B260 EXTENSIVE REPAIRS

PARTIAL FLOOR PLAN – MECHANICAL DEMOLITION

SCALE: AS NOTED

EPROJECT NO.: 1146716

CONSTR. CONTR. NO.: N40085-15-R-0018

NAVFAC DRAWING NO.: 12682033

SHEET 79 OF 118

MD102

DRAWFORM REVISION: 10 MARCH 2009

FILE NAME: P:\VA\VNSY\Buildings\0260\2011_1146716_Nuclear Materials Wrse Repairs\B_Design\Drawings\BLDG260-1146716-MD101 – 103.dwg LAYOUT NAME: MD102 PLOTTED: Tuesday, March 17, 2015 – 10:54am USER: Jay.Ashley

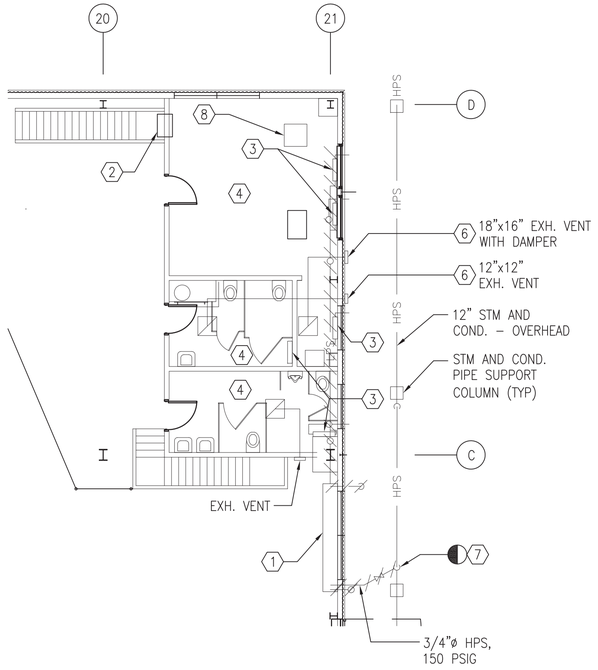

ENLARGED FIRST FLOOR PLAN

SCALE: 1/8" = 1'-0"

MD102 → C2 / MD103

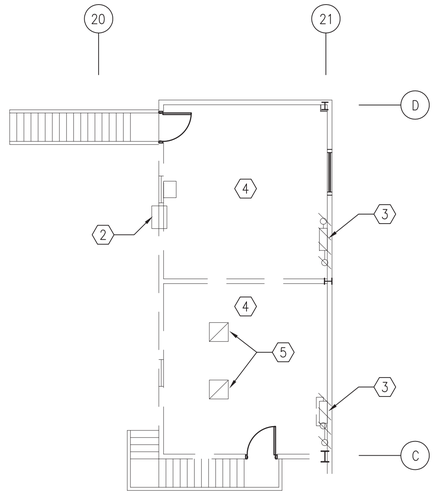

ENLARGED SECOND FLOOR PLAN

SCALE: 1/8" = 1'-0"

MD102 → C3 / MD103

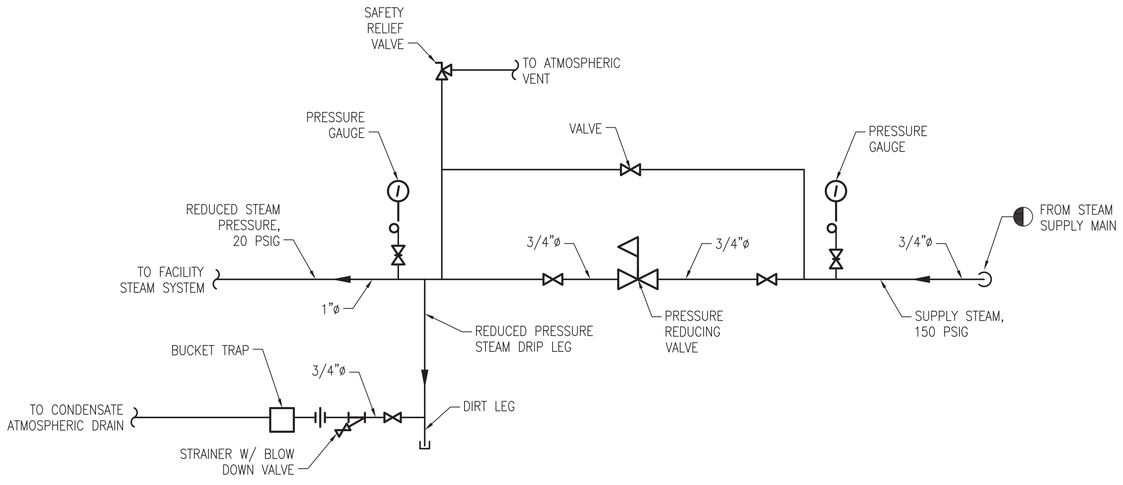

EXISTING STEAM PRESSURE REDUCING STATION

SCALE: NTS

MD103 → A1 / MD103

DEMO WORK NOTES

1. DEMO PRV STATION TO INCLUDE PRESSURE REDUCING VALVE, ASSOCIATED PIPING, FITTINGS, INSULATION, VALVES, DRIP TRAP, AND SAFETY RELIEF VALVE, SEE DETAIL A1 THIS SHEET. DEMO STM SERVICE PIPE TO LIMIT OF DEMOLITION. EXTERIOR WALL HOLE AT DRIP TRAP CONDENSATE PIPE PENETRATION TO REMAIN FOR REUSE, SEE DETAIL B1, NOTE 4, SHEET M-502. SAFETY RELIEF VALVE DISCHARGE PIPE EXTERIOR WALL PENETRATION HOLE TO REMAIN FOR REUSE. PRV STATION IS LOCATED APPROX. 90 IN. AFF. DEMO STM DISTRIBUTION PIPE WITHIN FACILITY. DEMOLITION TO INCLUDE FITTINGS AND INSULATION. SHUTOFF STEAM SERVICE PRIOR TO WORK.
2. DEMO UNITARY AIR CONDITIONER/HEATER.
3. DEMO STM CONVECTORS AND ASSOCIATED VALVES, TRAPS AND PIPING.
4. DEMO VENTILATION AND EXH. DUCTWORK, GRILLES AND ASSOCIATED EQUIPMENT.
5. DEMO EXH FAN, DUCTWORK, AND ASSOCIATED EQUIPMENT.
6. DEMO EXH. VENT AND ASSOCIATED EQUIPMENT. REPAIR AND PATCH EXTERIOR WALL AS PER ARCHITECTURAL.
7. DEMO 3/4"ø STEAM SERVICE TO BLDG. CUT AND CAP 3/4"ø PIPE AT 12"ø STEAM DISTRIBUTION PIPE. WELD ROUNDED END PIPE CAP TO 3/4"ø PIPE. SHUTOFF STEAM SERVICE PRIOR TO WORK.
8. DEMO DDC CABINET CONTAINING NSY BASEWIDE DDC SYSTEM FIBER OPTIC COMMUNICATION EQUIPMENT. COMMUNICATION EQUIPMENT SHALL REMAIN FOR REUSE. SEE SHEET M-112 NEW WORK NOTE 2 FOR BUILDING DDC MAIN PANEL NEW WORK.

KEY PLAN

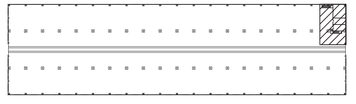

PLAN NORTH

GRAPHIC SCALE

1/8" = 1'-0"

0 4' 8' 16'

APPR	DATE	DESCRIPTION	STM

NAVFAC

SEAL

A/E INFO

APPROVED

FOR RALPH DEAL 3/23/15

FOR COMMANDER NAVFAC

ACTIVITY

SATISFACTORY TO DATE 3-23-15

DES	JMA	DRW	JMA	CHK	LDH

<<PM/DM>> R. M. RUSSELL

BRANCH MANAGER

ENGR DIRECTOR Ralph D. Deal

CUSTOMER

DEPARTMENT OF THE NAVY
NAVAL FACILITIES ENGINEERING COMMAND
PWD PORTSMOUTH

NAVAL FACILITIES ENGINEERING COMMAND – MID ATLANTIC
NORFOLK NAVAL SHIPYARD – PORTSMOUTH, VIRGINIA

NORFOLK NAVAL SHIPYARD
PORTSMOUTH, VIRGINIA

B260 EXTENSIVE REPAIRS

ENLARGED FLOOR PLANS – MECHANICAL DEMOLITION

SCALE: AS NOTED

EPROJECT NO.: 1146716

CONSTR. CONTR. NO.
N40085-15-R-0018

NAVFAC DRAWING NO.
12682034

SHEET 80 OF 118

MD103

DRAWFORM REVISION: 10 MARCH 2009

FILE NAME: P:\VA\VN57\Buildings\0260\2011_1146716_Nuclear Materials Wise Repairs\B_Design\Drawings\BLDG260-1146716-MD101 – 103.dwg LAYOUT NAME: MD103 PLOTTED: Tuesday, March 17, 2015 – 10:55am USER: JayAshley

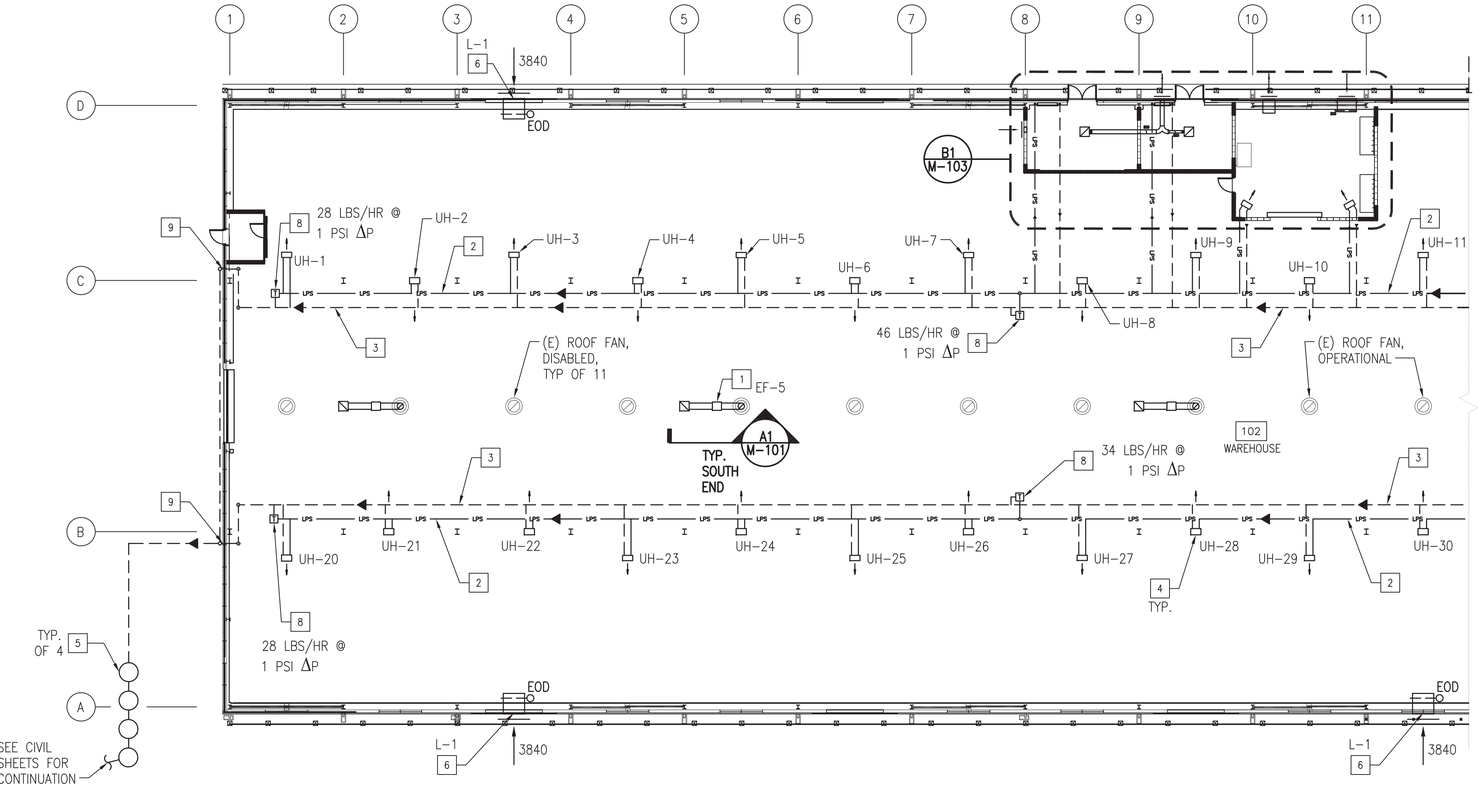

PARTIAL FIRST FLOOR PLAN - SOUTH END

SCALE: 1/16" = 1'-0"

PLAN NORTH

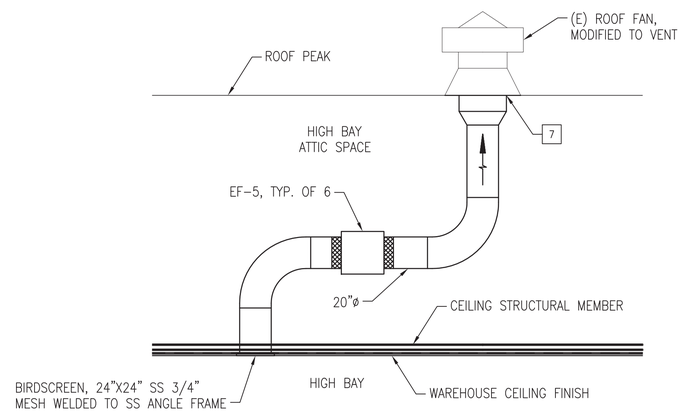

EXHAUST FAN DUCTWORK ELEVATION

SCALE: 1/4" = 1'-0"

M-101, M-102

A1 / M-101

GENERAL NOTES

1. PROVIDE NEW SUPPLY, RETURN, AND EXHAUST DUCTWORK AS SHOWN.
2. PROVIDE NEW SUPPLY DIFFUSERS AND RETURN AND EXHAUST GRILLES AS SHOWN.
3. PROVIDE HVAC SYSTEM TESTING, ADJUSTING, AND BALANCING (TAB) TO INDICATED AIRFLOWS AS SPECIFIED.
4. PROVIDE HVAC AIR DISTRIBUTION SYSTEM DUCT AIR LEAKAGE TESTING (DALT) AS SPECIFIED.
5. COORDINATE ALL EQUIPMENT, DUCTWORK, AND PIPING WITH STRUCTURAL FRAMING MEMBERS. PROVIDE HANGERS AND SUPPORTS FOR EQUIPMENT, DUCTWORK, AND PIPING AS REQUIRED.
6. FIELD VERIFY ALL DIMENSIONS PRIOR TO INSTALLATION OF ALL EQUIPMENT, PIPING, DUCTWORK, AND ASSOCIATED SUPPORTS.
7. ALL NEW DUCTWORK SHALL BE CONSTRUCTED IN ACCORDANCE WITH ASHRAE AND SMACNA., U.O.N.
8. PROVIDE INSULATION AS SPECIFIED ON SUPPLY AND RETURN AIR DUCTWORK.
9. PROVIDE INSULATION AS SPECIFIED ON HVAC RELATED PIPING.
10. FIELD VERIFY ALL DIMENSIONS PRIOR TO INSTALLATION OF ALL EQUIPMENT, PIPING, AND ASSOCIATED SUPPORTS.
11. PROVIDE SLEEVE AND SEAL AT NEW PIPING PENETRATIONS IN WALL, ROOF, FLOOR, AND CEILING.
12. PROVIDE ALL NECESSARY CONTACTORS, STARTERS, TRANSFORMERS, RELAYS, WIRING, CONTROLS, AND CONDUIT NECESSARY FOR COMPLETE OPERATIONAL HVAC SYSTEMS.

[X] NEW WORK NOTES

1. PROVIDE EXHAUST FAN ALONG WITH ASSOCIATED DUCTWORK AND EXHAUST GRILLES AS SHOWN. SEE EXHAUST FAN SCHEDULE, SHEET M-601.
2. PROVIDE STM PIPE. SLOPE PIPE 1 INCH FOR EVERY 16 FEET OF LENGTH IN DIRECTION OF FLOW. SEE SHEET M-109 AND M-110 FOR PIPE ELEVATIONS AND SIZES. PIPE LOCATION AS SHOWN ON THIS SHEET IS FOR CLARITY PURPOSES. INSTALL PIPE IN LOWER BAY AREA AS SHOWN IN DETAIL A1, SHEET M-201.
3. PROVIDE COND PIPE. SLOPE PIPE 1 INCH FOR EVERY 16 FEET OF LENGTH IN DIRECTION OF FLOW. SEE SHEET M-109 AND M-110 FOR PIPE ELEVATIONS AND SIZES. PIPE LOCATION AS SHOWN ON THIS SHEET IS FOR CLARITY PURPOSES. INSTALL PIPE IN LOWER BAY AREA AS SHOWN IN DETAIL A1, SHEET M-201.
4. PROVIDE STM UNIT HEATER. SEE UNIT HEATER SCHEDULE, SHEET M-602 AND DETAIL A4, SHEET M-502.
5. PROVIDE CONDENSATE COOLING WELL. SEE DETAIL C1, SHEET M-501.
6. PROVIDE LOUVER. SEE LOUVER SCHEDULE, SHEET M-602. LOCATE BOTTOM OF LOUVER APPROX. 10' ABOVE GRADE.
7. PROVIDE SHEET METAL TO BLOCK (E) ROOF VENT OPENING. PROVIDE APPROX. 30"X12" OPENING IN SHEET METAL. TRANSITION ROUND DUCT TO RECTANGULAR AS REQUIRED FOR CONNECTION TO THE OPENING. SECURE AND SUPPORT EXHAUST DUCTWORK TO (E) ROOF STRUCTURAL MEMBERS FOR EXHAUST AIRFLOW THROUGH VENT. PROVIDE SEAL AND MAKE AIRTIGHT.
8. PROVIDE STEAM TRAP ASSEMBLY. SEE REDUCED PRESSURE STEAM DRIP TRAP ASSEMBLY DETAIL, DETAIL B4, SHEET M-502.
9. PIPE TO EXIT BLDG. APPROX. 12" AFF. TURN COND PIPE DOWN INTO GROUND OUTSIDE OF BLDG. RUN COND PIPE TO COOLING WELL AS SHOWN. SEE DETAIL C1, SHEET M-501. SEE CIVIL SHEETS FOR ASSOCIATED WORK EXTERIOR TO BLDG.

KEY PLAN

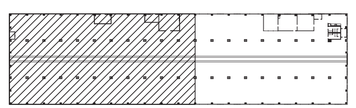

PLAN NORTH

GRAPHIC SCALE

1/16" = 1'-0" 0 8' 16' 32'

1/4" = 1'-0" 0 2' 4' 8'

NO.	DESCRIPTION	DATE	APPR

NAVFAC

SEAL

A/E INFO

APPROVED
Ch Bak
FOR RALPH DEAL 3/25/15
FOR COMMANDER NAVFAC

ACTIVITY
K J Bu
SATISFACTORY TO DATE 3-25-15

DES	JMA	DRW	JMA	CHK	LDH

<<PM/DM>> R. M. RUSSELL
BRANCH MANAGER
ENGR DIRECTOR Ralph D. Deal
CUSTOMER K J Bu

DEPARTMENT OF THE NAVY
NAVAL FACILITIES ENGINEERING COMMAND
PWD PORTSMOUTH

NAVAL FACILITIES ENGINEERING COMMAND ~ MID ATLANTIC
NORFOLK NAVAL SHIPYARD ~ PORTSMOUTH, VIRGINIA

NORFOLK NAVAL SHIPYARD
PORTSMOUTH, VIRGINIA

B260 EXTENSIVE REPAIRS

PARTIAL FLOOR PLAN ~ HVAC NEW WORK

SCALE: AS NOTED
EPROJECT NO.: 1146716
CONSTR. CONTR. NO. N40085-15-R-0018
NAVFAC DRAWING NO. 12682035
SHEET 81 OF 118

M-101

DRAWFORM REVISION: 10 MARCH 2009

FILE NAME: P:\VA\WNSY\Buildings\0260\2011_1146716_Nuclear Materials Wrse Repairs\B_Design\Drawings\B0O260-1146716-M-001 - 603.dwg LAYOUT NAME: M-101 PLOTTED: Friday, March 20, 2015 - 9:26am USER: Jay.Ashley

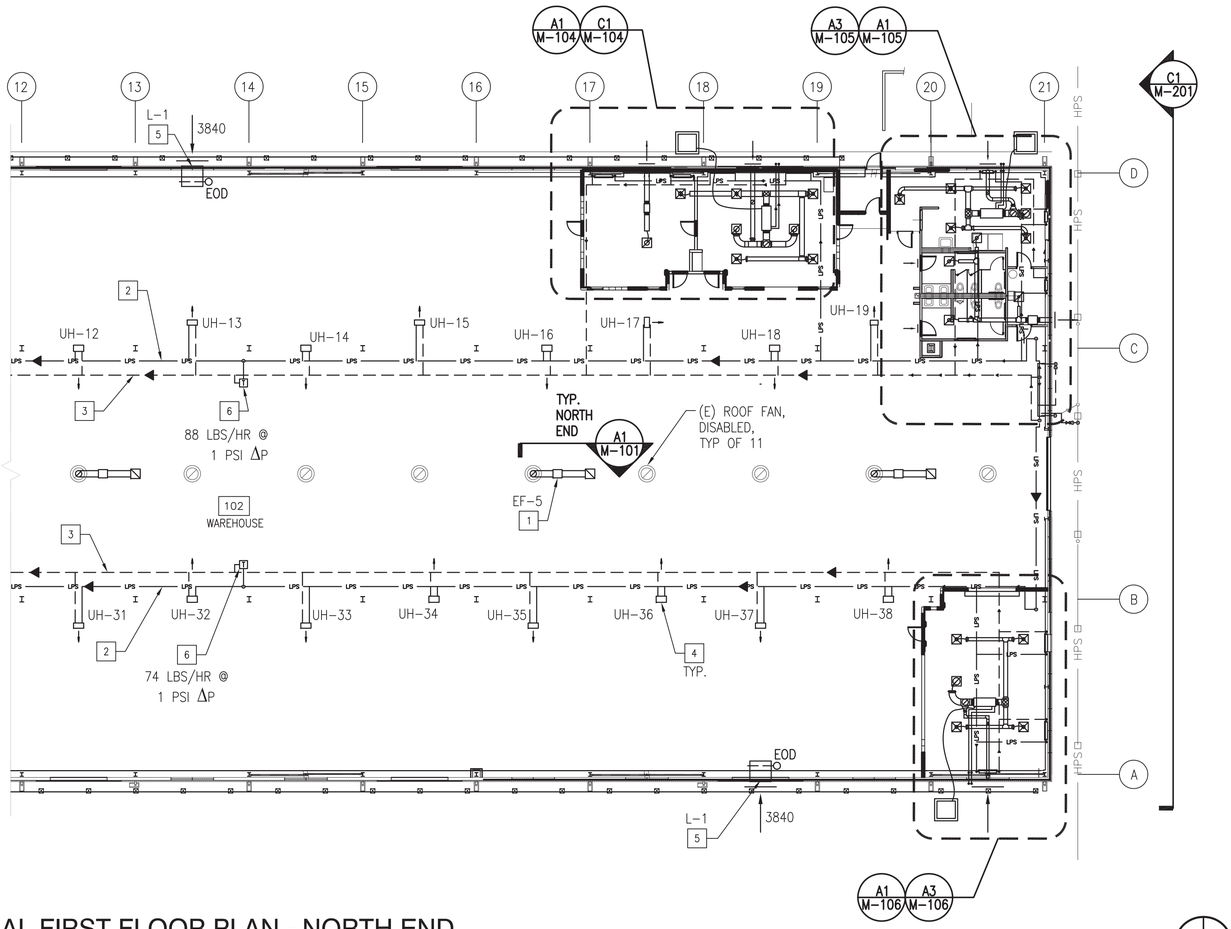

PARTIAL FIRST FLOOR PLAN - NORTH END

SCALE: 1/16" = 1'-0"

PLAN NORTH

GENERAL NOTES

1. PROVIDE NEW SUPPLY, RETURN, AND EXHAUST DUCTWORK AS SHOWN.
2. PROVIDE NEW SUPPLY DIFFUSERS AND RETURN AND EXHAUST GRILLES AS SHOWN.
3. PROVIDE HVAC SYSTEM TESTING, ADJUSTING, AND BALANCING (TAB) TO INDICATED AIRFLOWS AS SPECIFIED.
4. PROVIDE HVAC AIR DISTRIBUTION SYSTEM DUCT AIR LEAKAGE TESTING (DALT) AS SPECIFIED.
5. COORDINATE ALL PIPING AND DUCTWORK WITH STRUCTURAL FRAMING MEMBERS. PROVIDE HANGERS AND SUPPORTS FOR PIPING AND DUCTWORK AS REQUIRED.
6. FIELD VERIFY ALL DIMENSIONS PRIOR TO INSTALLATION OF ALL EQUIPMENT, PIPING, DUCTWORK, AND ASSOCIATED SUPPORTS.
7. ALL NEW DUCTWORK SHALL BE CONSTRUCTED IN ACCORDANCE WITH ASHRAE AND SMACNA., U.O.N.
8. PROVIDE INSULATION AS SPECIFIED ON SUPPLY AND RETURN AIR DUCTWORK.
9. PROVIDE INSULATION AS SPECIFIED ON HVAC RELATED PIPING.
10. FIELD VERIFY ALL DIMENSIONS PRIOR TO INSTALLATION OF ALL EQUIPMENT, PIPING, AND ASSOCIATED SUPPORTS.
11. PROVIDE SLEEVE AND SEAL AT NEW PIPING PENETRATIONS IN WALL, ROOF, FLOOR, AND CEILING.
12. PROVIDE ALL NECESSARY CONTACTORS, STARTERS, TRANSFORMERS, RELAYS, WIRING, CONTROLS, AND CONDUIT NECESSARY FOR COMPLETE OPERATIONAL HVAC SYSTEMS.

[X] NEW WORK NOTES

1. PROVIDE EXHAUST FAN ALONG WITH ASSOCIATED DUCTWORK AND EXHAUST GRILLES AS SHOWN. SEE EXHAUST FAN SCHEDULE, SHEET M-601.
2. PROVIDE STM PIPE. SLOPE PIPE 1 INCH FOR EVERY 16 FEET OF LENGTH IN DIRECTION OF FLOW. SEE SHEET M-109 AND M-110 FOR PIPE ELEVATIONS AND SIZES. PIPE LOCATION AS SHOWN ON THIS SHEET IS FOR CLARITY PURPOSES. INSTALL PIPE IN LOWER BAY AREA AS SHOWN IN DETAIL A1, SHEET M-201.
3. PROVIDE COND. PIPE. SLOPE PIPE 1 INCH FOR EVERY 16 FEET OF LENGTH IN DIRECTION OF FLOW. SEE SHEET M-109 AND M-110 FOR PIPE ELEVATIONS AND SIZES. PIPE LOCATION AS SHOWN ON THIS SHEET IS FOR CLARITY PURPOSES. INSTALL PIPE IN LOWER BAY AREA AS SHOWN IN DETAIL A1, SHEET M-201.
4. PROVIDE STM UNIT HEATER. SEE UNIT HEATER SCHEDULE, SHEET M-602 AND DETAIL A4, SHEET M-502.
5. PROVIDE LOUVER. SEE LOUVER SCHEDULE, SHEET M-602. LOCATE BOTTOM OF LOUVER APPROX. 10' ABOVE GRADE.
6. PROVIDE STEAM TRAP ASSEMBLY. SEE REDUCED PRESSURE STEAM DRIP TRAP ASSEMBLY DETAIL, DETAIL B4, SHEET M-502.

KEY PLAN

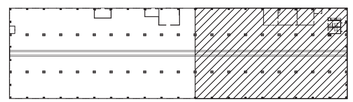

PLAN NORTH

GRAPHIC SCALE

1/16" = 1'-0"

0 8' 16' 32'

APPR	DATE	DESCRIPTION	STM

NAVFAC

SEAL

A/E INFO

APPROVED
FOR RALPH DEAL 2/23/15
FOR COMMANDER NAVFAC

ACTIVITY
SATISFACTORY TO DATE 3-25-15

DES: JMA | DRW: JMA | CHK: LDH
<<PM/CM>>: R. M. RUSSELL
BRANCH MANAGER
ENGR DIRECTOR: Ralph D. Deal
CUSTOMER

DEPARTMENT OF THE NAVY
NAVAL FACILITIES ENGINEERING COMMAND
PWD PORTSMOUTH

NAVAL FACILITIES ENGINEERING COMMAND ~ MID ATLANTIC
NORFOLK NAVAL SHIPYARD ~ PORTSMOUTH, VIRGINIA

NORFOLK NAVAL SHIPYARD
PORTSMOUTH, VIRGINIA

B260 EXTENSIVE REPAIRS

PARTIAL FLOOR PLAN – HVAC NEW WORK

SCALE: AS NOTED
EPROJECT NO.: 1146716
CONSTR. CONTR. NO. N40085-15-R-0018
NAVFAC DRAWING NO. 12682036
SHEET 82 OF 118

M-102

DRAWFORM REVISION: 10 MARCH 2009

FILE NAME: P:\VA\VNSY\Buildings\0260\2011_1146716_Nuclear Materials Whse Repairs\B_Design\Drawings\BLDG260-1146716-M-001 - 603.dwg LAYOUT NAME: M-102 PLOTTED: Tuesday, March 17, 2015 - 8:52am USER: JoyAshley

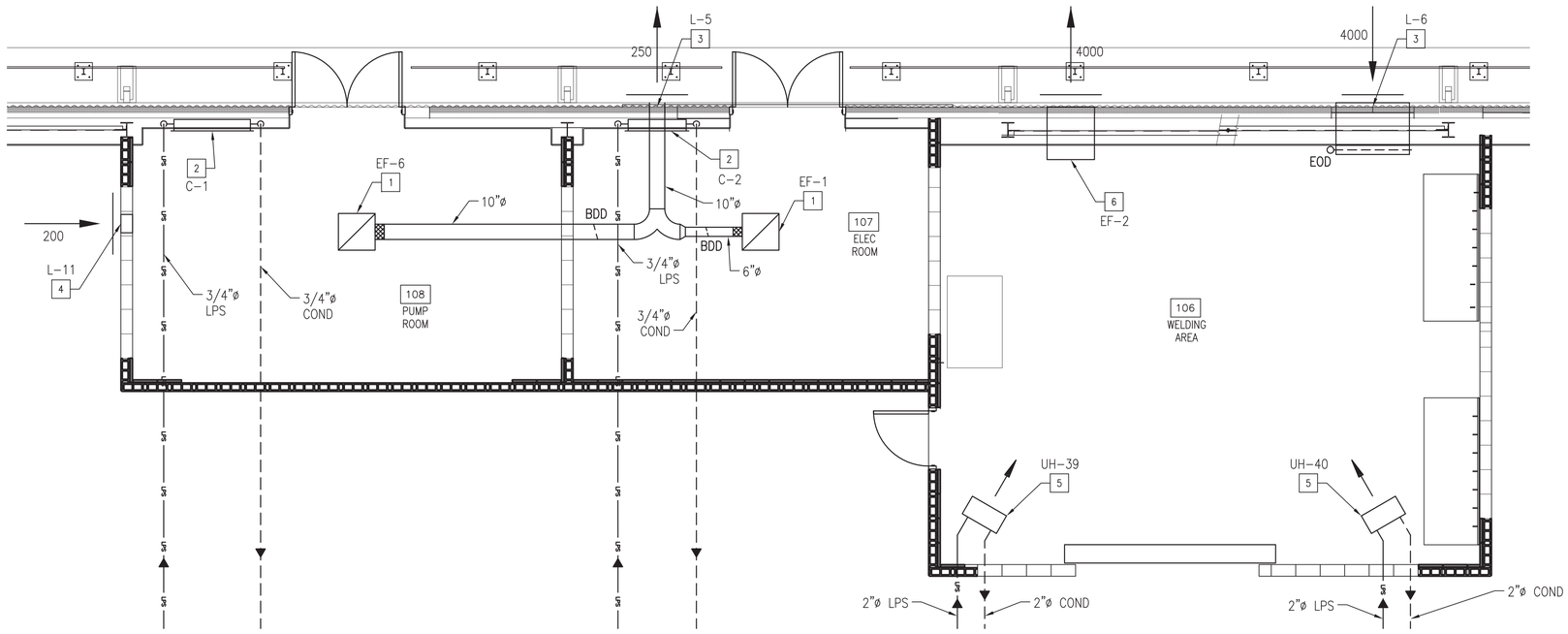

ENLARGED PLAN - HVAC NEW WORK

SCALE: 1/4" = 1'-0"

B1
M-101 M-103

GENERAL NOTES

1. PROVIDE NEW SUPPLY, RETURN, AND EXHAUST DUCTWORK AS SHOWN.
2. PROVIDE NEW SUPPLY DIFFUSERS AND RETURN AND EXHAUST GRILLES AS SHOWN.
3. PROVIDE HVAC SYSTEM TESTING, ADJUSTING, AND BALANCING (TAB) TO INDICATED AIRFLOWS AS SPECIFIED.
4. PROVIDE HVAC AIR DISTRIBUTION SYSTEM DUCT AIR LEAKAGE TESTING (DALT) AS SPECIFIED.
5. COORDINATE ALL PIPING AND DUCTWORK WITH STRUCTURAL FRAMING MEMBERS. PROVIDE HANGERS AND SUPPORTS FOR PIPING AND DUCTWORK AS REQUIRED.
6. FIELD VERIFY ALL DIMENSIONS PRIOR TO INSTALLATION OF ALL EQUIPMENT, PIPING, DUCTWORK, AND ASSOCIATED SUPPORTS.
7. ALL NEW DUCTWORK SHALL BE CONSTRUCTED IN ACCORDANCE WITH ASHRAE AND SMACNA., U.O.N.
8. PROVIDE INSULATION AS SPECIFIED ON SUPPLY AND RETURN AIR DUCTWORK.
9. PROVIDE INSULATION AS SPECIFIED ON HVAC RELATED PIPING.
10. PROVIDE SLEEVE AND SEAL AT NEW PIPING PENETRATIONS IN WALL, ROOF, FLOOR, AND CEILING.
11. PROVIDE ALL NECESSARY CONTACTORS, STARTERS, TRANSFORMERS, RELAYS, WIRING, CONTROLS, AND CONDUIT NECESSARY FOR COMPLETE OPERATIONAL HVAC SYSTEMS.

NEW WORK NOTES

X

1. PROVIDE EXHAUST FAN ALONG WITH ASSOCIATED DUCTWORK AND EXHAUST GRILLE. SEE EXHAUST FAN SCHEDULE, SHEET M-601. SECURE EXHAUST FAN AND DUCTWORK TO CEILING STRUCTURAL STEEL JOISTS.
2. PROVIDE WALL RECESSED STM HEAT CONVECTOR. SEE CONVECTOR SCHEDULE, SHEET M-602 AND DETAIL C4, SHEET M-501.
3. PROVIDE LOUVER. SEE LOUVER SCHEDULE, SHEET M-602. LOCATE BOTTOM OF LOUVER A MIN. OF 10' ABOVE GRADE.
4. PROVIDE LOUVER. SEE LOUVER SCHEDULE, SHEET M-602. LOCATE BOTTOM OF LOUVER APPROX. 6' AFF.
5. PROVIDE STM UNIT HEATER. SEE UNIT HEATER SCHEDULE, SHEET M-602 AND DETAIL A4, SHEET M-502.
6. PROVIDE PACKAGED WALL FAN (EF-2) TO INCLUDE ALUMINUM PROPELLER FAN, INTREGAL HOUSING, SHUTTER, INLET GUARD, AND GALVANIZED BIRD SCREEN. WALL OPENING IS SIZED AT 37.25"x37.25" FOR ESTIMATING PURPOSES. SEE EXHAUST FAN SCHEDULE, SHEET M-601.

GRAPHIC SCALE

1/4" = 1'-0" 0 2' 4' 8'

APPR	DATE	DESCRIPTION	SYM

NAVFAC

SEAL

A/E INFO

APPROVED
FOR RALPH DEAL 2/23/15
FOR COMMANDER NAVFAC

ACTIVITY
SATISFACTORY TO DATE 2-23-15
DES JMA DRW JMA CHK LDH
<<PM/DM>> R. M. RUSSELL
BRANCH MANAGER
ENGR DIRECTOR Ralph D. Deal
CUSTOMER

DEPARTMENT OF THE NAVY
NAVAL FACILITIES ENGINEERING COMMAND
PWD PORTSMOUTH
NAVAL FACILITIES ENGINEERING COMMAND ~ MID ATLANTIC
NORFOLK NAVAL SHIPYARD - PORTSMOUTH, VIRGINIA
NORFOLK NAVAL SHIPYARD
PORTSMOUTH, VIRGINIA

B260 EXTENSIVE REPAIRS

ENLARGED PLAN - HVAC NEW WORK

SCALE: AS NOTED
EPROJECT NO: 1146716
CONSTR. CONTR. NO: N40085-15-R-0018
NAVFAC DRAWING NO: 12682037
SHEET 83 OF 118

M-103

DRAWFORM REVISION: 10 MARCH 2009

FILE NAME: P:\VA\NNSY\Buildings\0260\2011_1146716_Nuclear Materials Wise Repairs\B_Design\Drawings\BLDG260-1146716-M-001 - 603.dwg LAYOUT NAME: M-103 PLOTTED: Tuesday, March 17, 2015 - 8:48am USER: JoyAshley

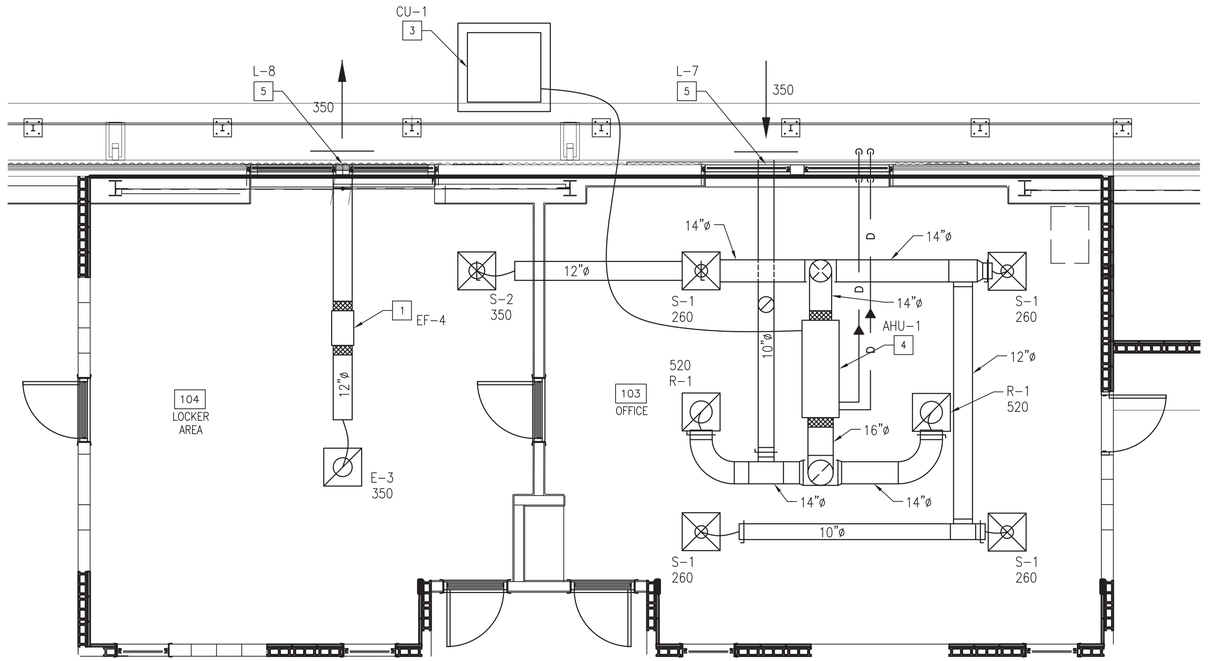

ENLARGED PLAN - COOLING AND VENTILATION

SCALE: 1/4" = 1'-0"

M-102 | C1 / M-104

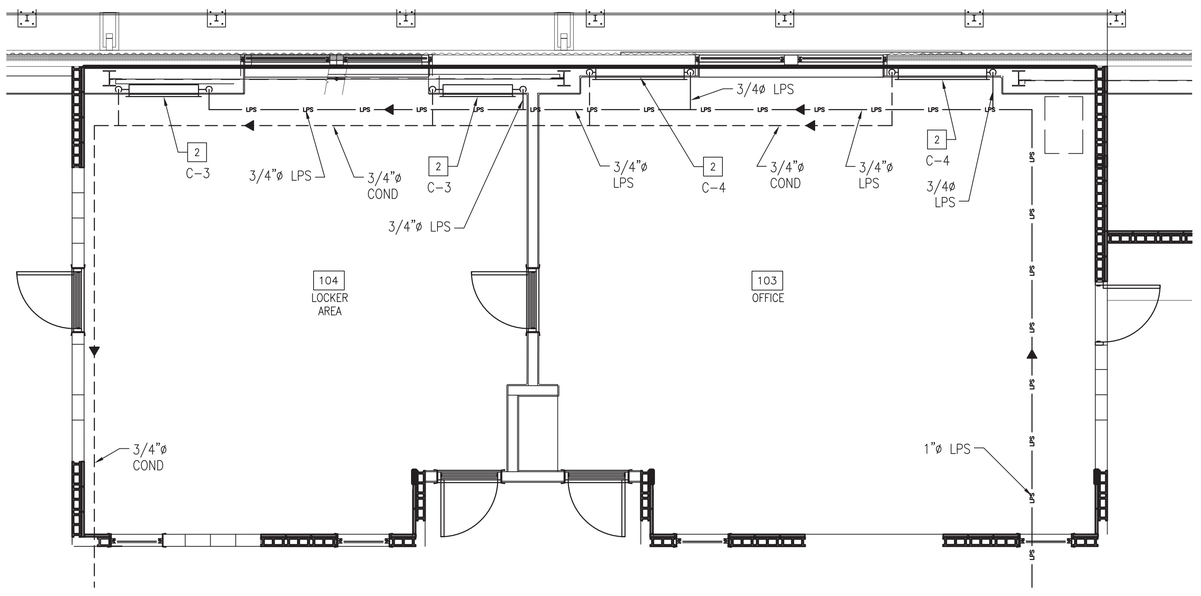

ENLARGED PLAN - STEAM HEATING

SCALE: 1/4" = 1'-0"

M-102 | A1 / M-104

GENERAL NOTES

1. PROVIDE NEW SUPPLY, RETURN, AND EXHAUST DUCTWORK AS SHOWN.
2. PROVIDE NEW SUPPLY DIFFUSERS AND RETURN AND EXHAUST GRILLES AS SHOWN.
3. PROVIDE HVAC SYSTEM TESTING, ADJUSTING, AND BALANCING (TAB) TO INDICATED AIRFLOWS AS SPECIFIED.
4. PROVIDE HVAC AIR DISTRIBUTION SYSTEM DUCT AIR LEAKAGE TESTING (DALT) AS SPECIFIED.
5. COORDINATE ALL PIPING AND DUCTWORK WITH STRUCTURAL FRAMING MEMBERS. PROVIDE HANGERS AND SUPPORTS FOR PIPING AND DUCTWORK AS REQUIRED.
6. FIELD VERIFY ALL DIMENSIONS PRIOR TO INSTALLATION OF ALL EQUIPMENT, PIPING, DUCTWORK, AND ASSOCIATED SUPPORTS.
7. ALL NEW DUCTWORK SHALL BE CONSTRUCTED IN ACCORDANCE WITH ASHRAE AND SMACNA., U.O.N.
8. PROVIDE INSULATION AS SPECIFIED ON SUPPLY AND RETURN AIR DUCTWORK. RETURN DUCTWORK LOCATED WITHIN CONDITIONED SPACES OR WITHIN SUSPENDED CEILING SPACES DO NOT REQUIRE INSULATION.
9. PROVIDE INSULATION AS SPECIFIED ON HVAC RELATED PIPING.
10. PROVIDE SLEEVE AND SEAL AT NEW PIPING PENETRATIONS IN WALL, ROOF, FLOOR, AND CEILING.
11. PROVIDE ALL NECESSARY CONTACTORS, STARTERS, TRANSFORMERS, RELAYS, WIRING, CONTROLS, AND CONDUIT NECESSARY FOR COMPLETE OPERATIONAL HVAC SYSTEMS.

[X] NEW WORK NOTES

1. PROVIDE EXHAUST FAN ALONG WITH ASSOCIATED DUCTWORK AND EXHAUST GRILLES AS SHOWN. SEE EXHAUST FAN SCHEDULE, SHEET M-601.
2. PROVIDE WALL RECESSED STM HEAT CONVECTOR. SEE CONVECTOR SCHEDULE, SHEET M-602 AND DETAIL C4, SHEET M-501.
3. PROVIDE SPLIT SYSTEM CONDENSING UNIT ALONG WITH REQUIRED REFRIGERANT TUBING. PROVIDE CONCRETE BASEPAD FOR CONDENSING UNIT. CONCRETE BASEPAD SHALL BE 4" THICK WITH THE SAME DIMENSIONS AS THE CU BASE AND EXTENDED 6" BEYOND THE SIDES. SECURE CONDENSING UNIT TO BASEPAD WITH EPOXY ANCHORS.
4. PROVIDE SPLIT SYSTEM AIR HANDLING UNIT ALONG WITH ASSOCIATED DUCTWORK, SUPPLY DIFFUSERS, AND RETURN GRILLES AS SHOWN. LOCATE AHU ON BUILDING-IN-BUILDING ROOF. LOCATE DUCTWORK BELOW ROOF ABOVE SUSPENDED CEILING. PROVIDE SECONDARY DRAIN PAN UNDER AHU SIZED LARGE ENOUGH TO SPAN FULL AREA BENEATH AHU AS A MINIMUM AND HAVE AT MINIMUM 2" HIGH SIDES. PROVIDE SCH. 40 PVC 1 1/2"ø COND. DRAIN PIPE FOR AHU AND SECONDARY DRAIN PAN AND SLOPE PIPES IN DIRECTION OF FLOW TO PROVIDE FOR ADEQUATE DRAINAGE. PROVIDE CONDENSATE DRAIN TRAP FOR AHU.
5. PROVIDE LOUVER. SEE LOUVER SCHEDULE, SHEET M-602.

GRAPHIC SCALE

1/4" = 1'-0" 0 2' 4' 8'

APPR | DATE | DESCRIPTION | STM

NAVFAC

SEAL

A/E INFO

APPROVED
for RALPH DEAL 2/23/15
FOR COMMANDER NAVFAC

ACTIVITY
SATISFACTORY TO DATE 3-24-15
DES JMA | DRW JMA | CHK LDH
<<PM/DM>> R. M. RUSSELL
BRANCH MANAGER
ENGR DIRECTOR Ralph D. Deal
CUSTOMER

DEPARTMENT OF THE NAVY
NAVAL FACILITIES ENGINEERING COMMAND
PWD PORTSMOUTH

NAVAL FACILITIES ENGINEERING COMMAND ~ MID ATLANTIC
NORFOLK NAVAL SHIPYARD - PORTSMOUTH, VIRGINIA

NORFOLK NAVAL SHIPYARD
PORTSMOUTH, VIRGINIA

B260 EXTENSIVE REPAIRS

ENLARGED PLANS - HVAC NEW WORK

SCALE: AS NOTED
EPROJECT NO.: 1146716
CONSTR. CONTR. NO. N40085-15-R-0018
NAVFAC DRAWING NO. 12682038
SHEET 84 OF 118

M-104

DRAWFORM REVISION: 10 MARCH 2009

FILE NAME: P:\VA\VNSY\Buildings\0260\2011_1146716_Nuclear Materials Whse Repairs\B_Design\Drawings\BLDG260-1146716-M-001 - 603.dwg LAYOUT NAME: M-104 PLOTTED: Tuesday, March 17, 2015 - 8:49am USER: JoyAshley

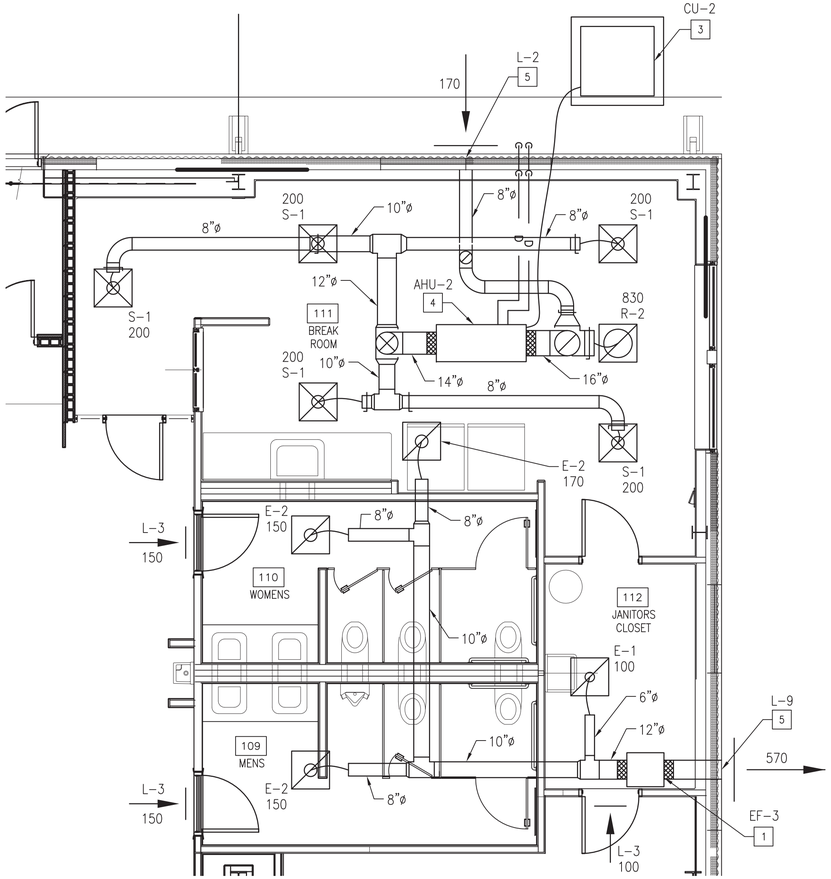

ENLARGED PLAN - COOLING AND VENTILATION

SCALE: 1/4" = 1'-0"

M-102 | A1 | M-105

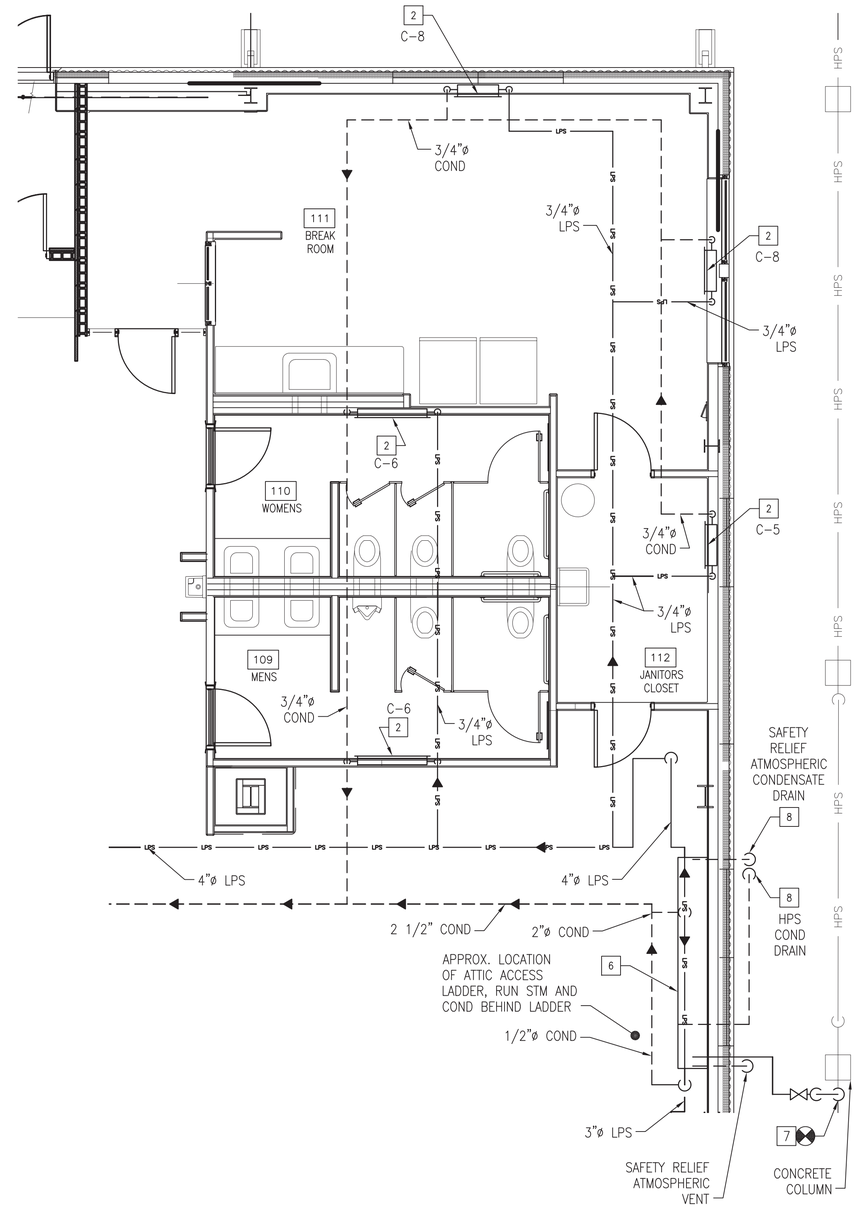

ENLARGED PLAN - STEAM HEATING

SCALE: 1/4" = 1'-0"

M-102 | A3 | M-105

GENERAL NOTES

1. PROVIDE NEW SUPPLY, RETURN, AND EXHAUST DUCTWORK AS SHOWN.
2. PROVIDE NEW SUPPLY DIFFUSERS AND RETURN AND EXHAUST GRILLES AS SHOWN.
3. PROVIDE HVAC SYSTEM TESTING, ADJUSTING, AND BALANCING (TAB) TO INDICATED AIRFLOWS AS SPECIFIED.
4. PROVIDE HVAC AIR DISTRIBUTION SYSTEM DUCT AIR LEAKAGE TESTING (DALT) AS SPECIFIED.
5. COORDINATE ALL PIPING AND DUCTWORK WITH STRUCTURAL FRAMING MEMBERS. PROVIDE HANGERS AND SUPPORTS FOR PIPING AND DUCTWORK AS REQUIRED.
6. FIELD VERIFY ALL DIMENSIONS PRIOR TO INSTALLATION OF ALL EQUIPMENT, PIPING, DUCTWORK, AND ASSOCIATED SUPPORTS.
7. ALL NEW DUCTWORK SHALL BE CONSTRUCTED IN ACCORDANCE WITH ASHRAE AND SMACNA., U.O.N.
8. PROVIDE INSULATION AS SPECIFIED ON SUPPLY AND RETURN AIR DUCTWORK. RETURN DUCTWORK LOCATED WITHIN CONDITIONED SPACES OR WITHIN SUSPENDED CEILING SPACES DO NOT REQUIRE INSULATION.
9. PROVIDE INSULATION AS SPECIFIED ON HVAC RELATED PIPING.
10. PROVIDE SLEEVE AND SEAL AT NEW PIPING PENETRATIONS IN WALL, ROOF, FLOOR, AND CEILING.
11. PROVIDE ALL NECESSARY CONTACTORS, STARTERS, TRANSFORMERS, RELAYS, WIRING, CONTROLS, AND CONDUIT NECESSARY FOR COMPLETE OPERATIONAL HVAC SYSTEMS.

[X] NEW WORK NOTES

1. PROVIDE EXHAUST FAN ALONG WITH ASSOCIATED DUCTWORK AND EXHAUST GRILLES AS SHOWN. SEE EXHAUST FAN SCHEDULE, SHEET M-601.
2. PROVIDE WALL RECESSED STM HEAT CONVECTOR. SEE CONVECTOR SCHEDULE, SHEET M-602 AND DETAIL C4, SHEET M-501.
3. PROVIDE SPLIT SYSTEM CONDENSING UNIT ALONG WITH REQUIRED REFRIGERANT TUBING. PROVIDE CONCRETE BASEPAD FOR CONDENSING UNIT. CONCRETE BASEPAD SHALL BE 4" THICK WITH THE SAME DIMENSIONS AS THE CU BASE AND EXTENDED 6" BEYOND THE SIDES. SECURE CONDENSING UNIT TO BASEPAD WITH EPOXY ANCHORS.
4. PROVIDE SPLIT SYSTEM AIR HANDLING UNIT ALONG WITH ASSOCIATED DUCTWORK, SUPPLY DIFFUSERS, AND RETURN GRILLES AS SHOWN. LOCATE AHU ON BUILDING-IN-BUILDING ROOF. LOCATE DUCTWORK BELOW ROOF ABOVE SUSPENDED CEILING. PROVIDE SECONDARY DRAIN PAN UNDER AHU SIZED LARGE ENOUGH TO SPAN FULL AREA BENEATH AHU AS A MINIMUM AND HAVE AT MINIMUM 2" HIGH SIDES. PROVIDE SCH. 40 PVC 1 1/2"ø COND. DRAIN PIPE FOR AHU AND SECONDARY DRAIN PAN AND SLOPE PIPES IN DIRECTION OF FLOW TO PROVIDE FOR ADEQUATE DRAINAGE. PROVIDE CONDENSATE DRAIN TRAP FOR AHU.
5. PROVIDE LOUVER. SEE LOUVER SCHEDULE, SHEET M-602.
6. PROVIDE NEW STM PRESSURE REDUCING STATION. SEE DETAIL B1, SHEET M-502. MOUNT PRESSURE PRV APPROX. 36" AFF.
7. PROVIDE TEE FOR CONNECTION OF 3"ø STEAM SERVICE PIPE TO TOP OF 12"ø STEAM DISTRIBUTION PIPE. PROVIDE PIPE INSULATION AS SPECIFIED. SUPPORT 3"ø STM PIPE FROM COLUMN AS REQUIRED.
8. RUN PIPE ALONG EXTERIOR WALL AND TURN PIPE DOWN INTO (E) MANHOLE FOR DISHCARGE. SECURE PIPE TO EXTERIOR WALL OF BLDG.

GRAPHIC SCALE

1/4" = 1'-0"

0 2' 4' 8'

APPR	DATE	DESCRIPTION	STM

NAVFAC

SEAL

A/E INFO

APPROVED
FOR COMMANDER NAVFAC
ACTIVITY
SATISFACTORY TO DATE 3-25-15
DES JMA DRW JMA CHK LDH
<<PM/DM>> R. M. RUSSELL
BRANCH MANAGER
ENGR DIRECTOR Ralph D. Deal
CUSTOMER

DEPARTMENT OF THE NAVY
NAVAL FACILITIES ENGINEERING COMMAND
PWD PORTSMOUTH

NAVAL FACILITIES ENGINEERING COMMAND – MID ATLANTIC
NORFOLK NAVAL SHIPYARD – PORTSMOUTH, VIRGINIA

NORFOLK NAVAL SHIPYARD
PORTSMOUTH, VIRGINIA

B260 EXTENSIVE REPAIRS

ENLARGED PLANS – HVAC NEW WORK

SCALE: AS NOTED
EPROJECT NO.: 1146716
CONSTR. CONTR. NO.: N40085-15-R-0018
NAVFAC DRAWING NO.: 12682039
SHEET 85 OF 118

M-105

DRAWFORM REVISION: 10 MARCH 2009

FILE NAME: P:\VA\VNSY\Buildings\0260\2011_1146716_Nuclear Materials Wrse Repairs\B_Design\Drawings\BLDG260-1146716-M-001 - 603.dwg LAYOUT NAME: M-105 PLOTTED: Tuesday, March 17, 2015 - 10:11am USER: Joy.Ashley

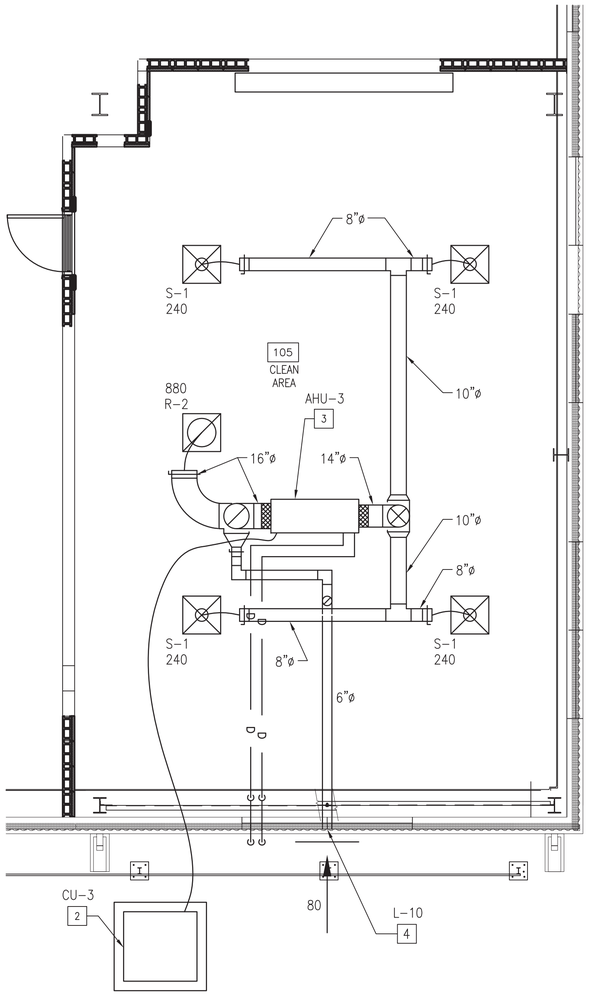

ENLARGED PLAN - COOLING AND VENTILATION

SCALE: 1/4" = 1'-0"

M-102 A1 M-106

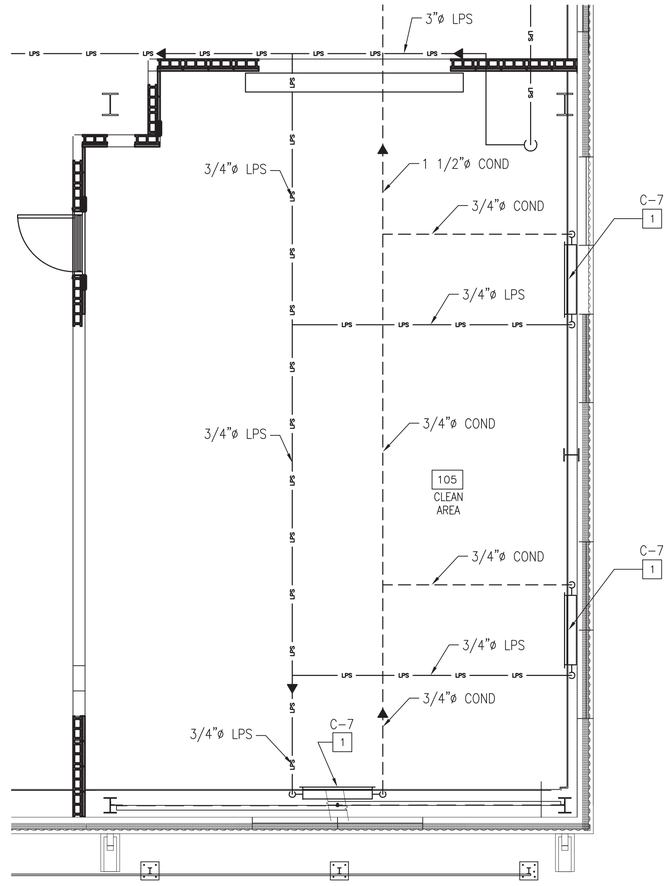

ENLARGED PLAN - STEAM HEATING

SCALE: 1/4" = 1'-0"

M-102 A3 M-106

GENERAL NOTES

1. PROVIDE NEW SUPPLY, RETURN, AND EXHAUST DUCTWORK AS SHOWN.
2. PROVIDE NEW SUPPLY DIFFUSERS AND RETURN AND EXHAUST GRILLES AS SHOWN.
3. PROVIDE HVAC SYSTEM TESTING, ADJUSTING, AND BALANCING (TAB) TO INDICATED AIRFLOWS AS SPECIFIED.
4. PROVIDE HVAC AIR DISTRIBUTION SYSTEM DUCT AIR LEAKAGE TESTING (DALT) AS SPECIFIED.
5. COORDINATE ALL PIPING AND DUCTWORK WITH STRUCTURAL FRAMING MEMBERS. PROVIDE HANGERS AND SUPPORTS FOR PIPING AND DUCTWORK AS REQUIRED.
6. FIELD VERIFY ALL DIMENSIONS PRIOR TO INSTALLATION OF ALL EQUIPMENT, PIPING, DUCTWORK, AND ASSOCIATED SUPPORTS.
7. ALL NEW DUCTWORK SHALL BE CONSTRUCTED IN ACCORDANCE WITH ASHRAE AND SMACNA., U.O.N.
8. PROVIDE INSULATION AS SPECIFIED ON SUPPLY AND RETURN AIR DUCTWORK. RETURN DUCTWORK LOCATED WITHIN CONDITIONED SPACES OR WITHIN SUSPENDED CEILING SPACES DO NOT REQUIRE INSULATION.
9. PROVIDE INSULATION AS SPECIFIED ON HVAC RELATED PIPING.
10. PROVIDE SLEEVE AND SEAL AT NEW PIPING PENETRATIONS IN WALL, ROOF, FLOOR, AND CEILING.
11. PROVIDE ALL NECESSARY CONTACTORS, STARTERS, TRANSFORMERS, RELAYS, WIRING, CONTROLS, AND CONDUIT NECESSARY FOR COMPLETE OPERATIONAL HVAC SYSTEMS.

X NEW WORK NOTES

1. PROVIDE WALL RECESSED STM HEAT CONVECTOR. SEE CONVECTOR SCHEDULE, SHEET M-602 AND DETAIL C4, SHEET M-501.
2. PROVIDE SPLIT SYSTEM CONDENSING UNIT ALONG WITH REQUIRED REFRIGERANT TUBING. PROVIDE CONCRETE BASEPAD FOR CONDENSING UNIT. CONCRETE BASEPAD SHALL BE 4" THICK WITH THE SAME DIMENSIONS AS THE CU BASE AND EXTENDED 6" BEYOND THE SIDES. SECURE CONDENSING UNIT TO BASEPAD WITH EPOXY ANCHORS.
3. PROVIDE SPLIT SYSTEM AIR HANDLING UNIT ALONG WITH ASSOCIATED DUCTWORK, SUPPLY DIFFUSERS, AND RETURN GRILLES AS SHOWN. LOCATE AHU ON BUILDING-IN-BUILDING ROOF. LOCATE DUCTWORK BELOW ROOF AT CEILING. PROVIDE SECONDARY DRAIN PAN UNDER AHU SIZED LARGE ENOUGH TO SPAN FULL AREA BENEATH AHU AS A MINIMUM AND HAVE AT MINIMUM 2" HIGH SIDES. PROVIDE SCH. 40 PVC 1 1/2"ø COND. DRAIN PIPE FOR AHU AND SECONDARY DRAIN PAN AND SLOPE PIPES IN DIRECTION OF FLOW TO PROVIDE FOR ADEQUATE DRAINAGE. PROVIDE CONDENSATE DRAIN TRAP FOR AHU.
4. PROVIDE LOUVER. SEE LOUVER SCHEDULE, SHEET M-602.

GRAPHIC SCALE

1/4" = 1'-0"

0 2' 4' 8'

NO.	DESCRIPTION	DATE	APPR
SYM			

SEAL

A/E INFO

APPROVED
FOR RALPH DEAL 3/23/15
FOR COMMANDER NAVFAC

ACTIVITY
SATISFACTORY TO DATE 3-23-15

DES	JMA	DRW	JMA	CHK	LDH

<<PM/DM>> R. M. RUSSELL
BRANCH MANAGER
ENGR DIRECTOR Ralph D. Deal
CUSTOMER

DEPARTMENT OF THE NAVY
NAVAL FACILITIES ENGINEERING COMMAND
PWD PORTSMOUTH

NAVAL FACILITIES ENGINEERING COMMAND ~ MID ATLANTIC
NORFOLK NAVAL SHIPYARD - PORTSMOUTH, VIRGINIA

NORFOLK NAVAL SHIPYARD
PORTSMOUTH, VIRGINIA

B260 EXTENSIVE REPAIRS

ENLARGED PLANS - HVAC NEW WORK

SCALE: AS NOTED
EPROJECT NO.: 1146716
CONSTR. CONTR. NO.: N40085-15-R-0018
NAVFAC DRAWING NO.: 12682040
SHEET 86 OF 118

M-106

DRAWFORM REVISION: 10 MARCH 2009

FILE NAME: P:\VA\NNSY\Buildings\V260\2011_1146716_Nuclear Materials Wste Repairs\B_Design\Drawings\BLD260-1146716-M-001 - 603.dwg LAYOUT NAME: M-106 PLOTTED: Tuesday, March 17, 2015 - 8:51am USER: Joy.Ashley

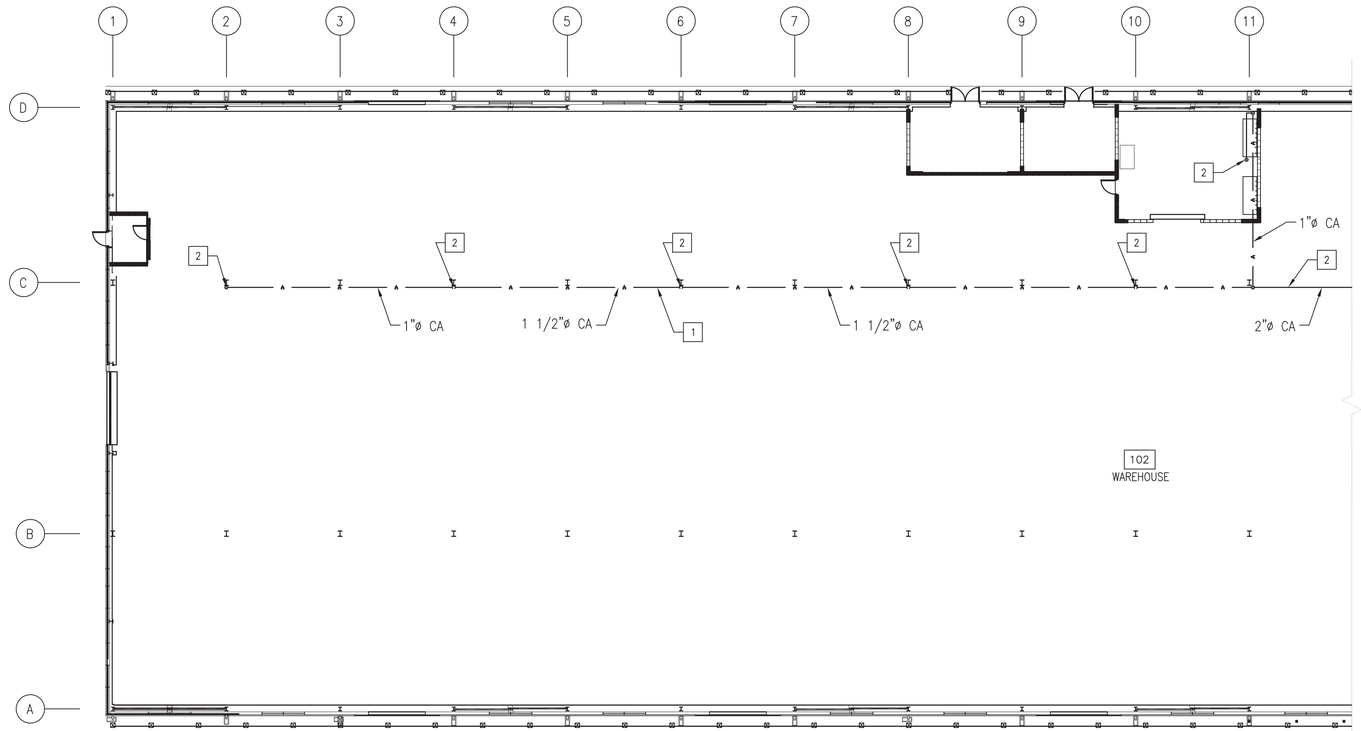

PARTIAL FIRST FLOOR PLAN - SOUTH END

SCALE: 1/16" = 1'-0"

PLAN NORTH

GENERAL NOTES

1. COORDINATE ALL PIPING WITH STRUCTURAL FRAMING MEMBERS. PROVIDE HANGERS AND SUPPORTS FOR PIPING AS REQUIRED.
2. FIELD VERIFY ALL DIMENSIONS PRIOR TO INSTALLATION OF ALL EQUIPMENT, PIPING, AND ASSOCIATED SUPPORTS.
3. PROVIDE SLEEVE AND SEAL AT NEW PIPING PENETRATIONS IN WALL, ROOF, FLOOR, AND CEILING.
4. TEST PIPING AS SPECIFIED TO A WORKING PRESSURE OF 110 PSIG. WORKING AIR PRESSURE AT COMPRESSED AIR SYSTEM HOSE CONNECTION SHALL NOT BE LESS THAN 100 PSIG.

X NEW WORK NOTES

1. PROVIDE CA PIPE AS SHOWN FOR FACILITY COMPRESSED AIR DISTRIBUTION SYSTEM. PIPE LOCATION AS SHOWN ON THIS SHEET IS FOR CLARITY PURPOSES. INSTALL PIPE IN LOWER BAY AREA AS SHOWN IN DETAIL A1, SHEET M-201.
2. PROVIDE A 1"ø COMPRESSED AIR PIPE DROP ALONG COLUMN TO AIR VALVE MANIFOLD. PROVIDE AIR VALVE MANIFOLD WITH TWO 3/4"ø CA QUICK COUPLING CONNECTION POINTS MOUNTED ON COLUMN AND LOCATED 48" AFF. SEE TYPICAL AIR VALVE MANIFOLD MOUNTING DETAIL A1, SHEET M-501, AND TYPICAL AIR VALVE MANIFOLD DETAIL A2, SHEET M-501.

KEY PLAN

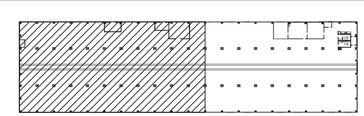

PLAN NORTH

GRAPHIC SCALE

1/16" = 1'-0"

0 8' 16' 32'

SYM	DESCRIPTION	DATE	APPR

NAVFAC

SEAL

A/E INFO

APPROVED
FOR RALPH DEAL 3/23/15
FOR COMMANDER NAVFAC

ACTIVITY
SATISFACTORY TO DATE 3-23-15

DES	JMA	DRW	JMA	CHK	LDH

<<PM/DM>> R. M. RUSSELL
BRANCH MANAGER
ENGR DIRECTOR Ralph D. Deal
CUSTOMER

DEPARTMENT OF THE NAVY
NAVAL FACILITIES ENGINEERING COMMAND
NAVAL FACILITIES ENGINEERING COMMAND ~ MID ATLANTIC
PWD PORTSMOUTH NORFOLK NAVAL SHIPYARD - PORTSMOUTH, VIRGINIA
NORFOLK NAVAL SHIPYARD PORTSMOUTH, VIRGINIA

B260 EXTENSIVE REPAIRS

PARTIAL FLOOR PLAN - COMPRESSED AIR NEW WORK

SCALE: AS NOTED
EPROJECT NO.: 1146716
CONSTR. CONTR. NO. N40085-15-R-0018
NAVFAC DRAWING NO. 12682041
SHEET 87 OF 118

M-107

DRAWFORM REVISION: 10 MARCH 2009

FILE NAME: P:\VA\NNSY\Buildings\0260\2011_1146716_Nuclear Materials Whse Repairs\B_Design\Drawings\BLDG260-1146716-M-001 - 603.dwg LAYOUT NAME: M-107 PLOTTED: Tuesday, March 17, 2015 - 10:17am USER: JayAshley

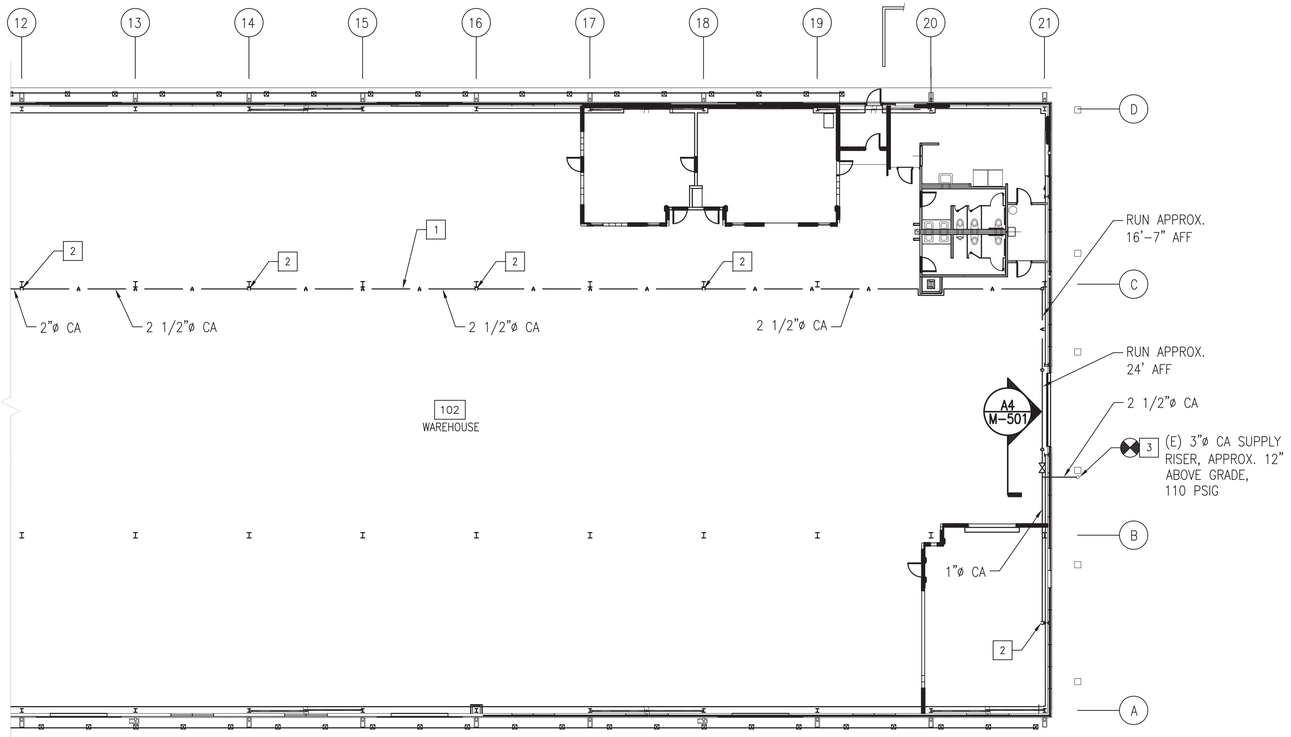

PARTIAL FIRST FLOOR PLAN - NORTH END

SCALE: 1/16" = 1'-0"

PLAN NORTH

GENERAL NOTES

1. COORDINATE ALL PIPING WITH STRUCTURAL FRAMING MEMBERS. PROVIDE HANGERS AND SUPPORTS FOR PIPING AS REQUIRED.
2. FIELD VERIFY ALL DIMENSIONS PRIOR TO INSTALLATION OF ALL EQUIPMENT, PIPING, AND ASSOCIATED SUPPORTS.
3. PROVIDE SLEEVE AND SEAL AT NEW PIPING PENETRATIONS IN WALL, ROOF, FLOOR, AND CEILING.
4. TEST PIPING AS SPECIFIED TO A WORKING PRESSURE OF 110 PSIG. WORKING AIR PRESSURE AT COMPRESSED AIR SYSTEM HOSE CONNECTION SHALL NOT BE LESS THAN 100 PSIG.

X NEW WORK NOTES

1. PROVIDE CA PIPE AS SHOWN FOR FACILITY COMPRESSED AIR DISTRIBUTION SYSTEM. PIPE LOCATION AS SHOWN ON THIS SHEET IS FOR CLARITY PURPOSES. INSTALL PIPE IN LOWER BAY AREA AS SHOWN IN DETAIL A1, SHEET M-201.
2. PROVIDE A 1"ø COMPRESSED AIR PIPE DROP ALONG COLUMN TO AIR VALVE MANIFOLD. PROVIDE AIR VALVE MANIFOLD WITH TWO 3/4"ø CA QUICK COUPLING CONNECTION POINTS MOUNTED ON COLUMN AND LOCATED 48" AFF. SEE TYPICAL AIR VALVE MANIFOLD MOUNTING DETAIL A1, SHEET M-501, AND TYPICAL AIR VALVE MANIFOLD DETAIL A2, SHEET M-501.
3. PROVIDE CONNECTION OF FACILITY COMPRESSED AIR DISTRIBUTION PIPE TO (E) 3"ø COMPRESSED AIR COUPLING.

KEY PLAN

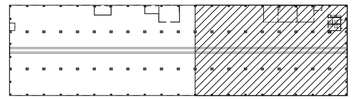

PLAN NORTH

GRAPHIC SCALE

1/16" = 1'-0"

0 8' 16' 32'

NO.	DESCRIPTION	DATE	APPR

NAVFAC

SEAL

A/E INFO

APPROVED
FOR RALPH DEAL 2/23/15
FOR COMMANDER NAVFAC

ACTIVITY
SATISFACTORY TO DATE 2-23-15

DES	JMA	DRW	JMA	CHK	LDH

<<PM/DM>> R. M. RUSSELL
BRANCH MANAGER
ENGR DIRECTOR Ralph D. Deal
CUSTOMER

DEPARTMENT OF THE NAVY
NAVAL FACILITIES ENGINEERING COMMAND
PWD PORTSMOUTH
NAVAL FACILITIES ENGINEERING COMMAND ~ MID ATLANTIC
NORFOLK NAVAL SHIPYARD - PORTSMOUTH, VIRGINIA
NORFOLK NAVAL SHIPYARD
PORTSMOUTH, VIRGINIA

B260 EXTENSIVE REPAIRS

PARTIAL FLOOR PLAN - COMPRESSED AIR NEW WORK

SCALE: AS NOTED
EPROJECT NO: 1146716
CONSTR. CONTR. NO: N40085-15-R-0018
NAVFAC DRAWING NO: 12682042
SHEET 88 OF 118

M-108

DRAWFORM REVISION: 10 MARCH 2009

FILE NAME: P:\VA\NNSY\Buildings\0260\2011_1146716_Nuclear Materials Wrse Repairs\B_Design\Drawings\BLD0260-1146716-M-001 - 603.dwg LAYOUT NAME: M-108 PLOTTED: Tuesday, March 17, 2015 - 10:18am USER: JoyAshley

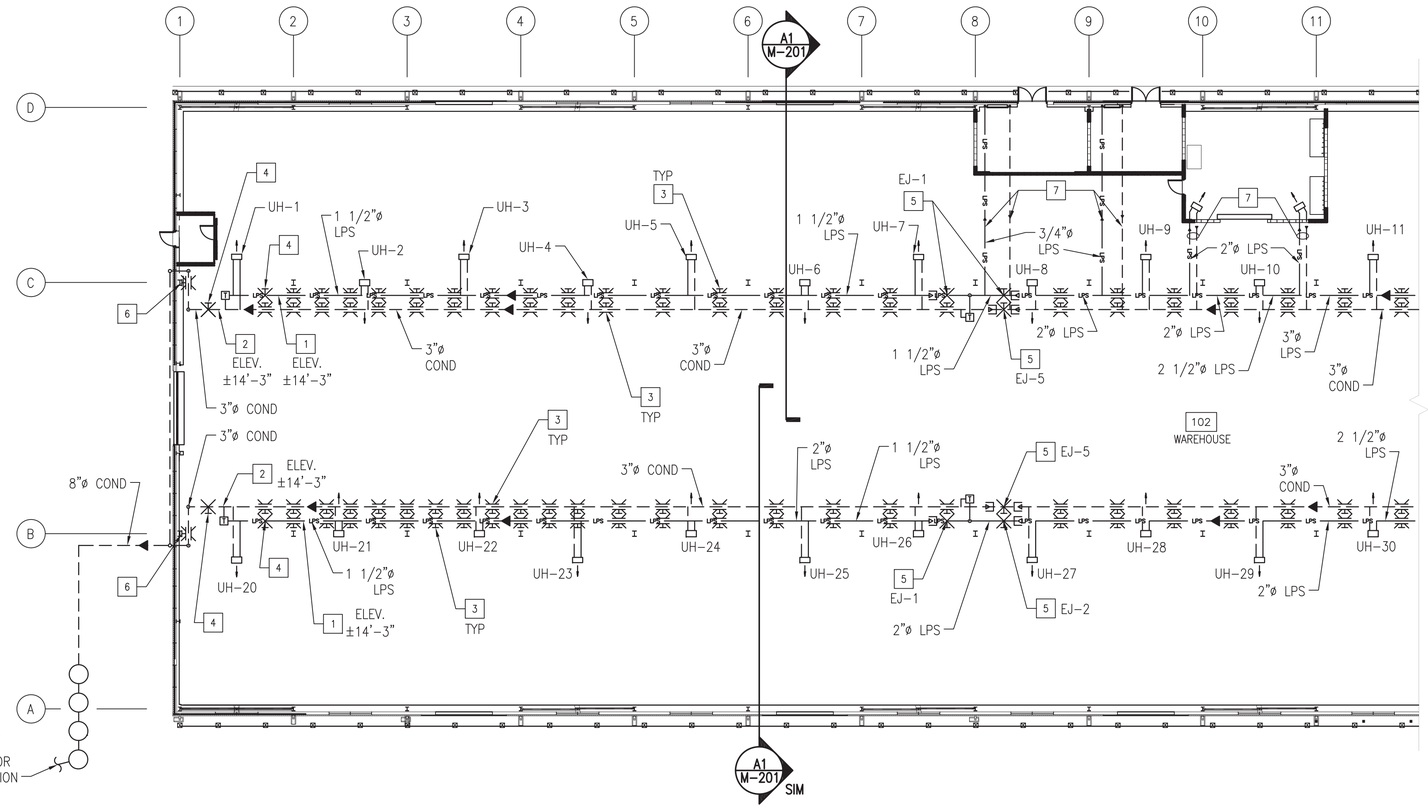

PARTIAL FIRST FLOOR PLAN - SOUTH END

SCALE: 1/16" = 1'-0"

PLAN NORTH

KEY PLAN

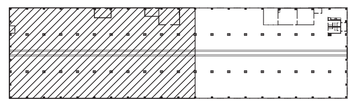

PLAN NORTH

GENERAL NOTES

1. COORDINATE ALL PIPING WITH STRUCTURAL FRAMING MEMBERS. PROVIDE HANGERS AND SUPPORTS FOR PIPING AS REQUIRED.
2. FIELD VERIFY ALL DIMENSIONS PRIOR TO INSTALLATION OF ALL EQUIPMENT, PIPING, AND ASSOCIATED SUPPORTS.
3. FIELD VERIFY ALL DIMENSIONS PRIOR TO INSTALLATION OF ALL EQUIPMENT, PIPING, AND ASSOCIATED SUPPORTS.
4. PROVIDE SLEEVE AND SEAL AT NEW PIPING PENETRATIONS IN WALL, ROOF, FLOOR, AND CEILING AS PER SPECIFICATIONS.
5. PROVIDE ALL NECESSARY CONTACTORS, STARTERS, TRANSFORMERS, RELAYS, WIRING, CONTROLS, AND CONDUIT NECESSARY FOR COMPLETE OPERATIONAL HVAC SYSTEMS.

[X] NEW WORK NOTES

1. PROVIDE STM PIPE. INSTALL PIPE AT APPROX. ELEVATION SHOWN. SLOPE PIPE 1 INCH FOR EVERY 16 FEET OF LENGTH IN DIRECTION OF FLOW. OFFSET PIPE AT MAIN LINE TRAPS AS REQUIRED TO MAINTAIN ELEVATION. PIPE LOCATION AS SHOWN ON THIS SHEET IS FOR CLARITY PURPOSES. INSTALL PIPE IN LOWER BAY AREA AS SHOWN IN DETAIL A1, SHEET M-201.
2. PROVIDE COND. PIPE. INSTALL PIPE AT APPROX. ELEVATION SHOWN. SLOPE PIPE 1 INCH FOR EVERY 16 FEET OF LENGTH IN DIRECTION OF FLOW. PIPE SHALL MAINTAIN CONTINUOUS SLOPE. PIPE LOCATION AS SHOWN ON THIS SHEET IS FOR CLARITY PURPOSES. INSTALL PIPE IN LOWER BAY AREA AS SHOWN IN DETAIL A1, SHEET M-201.
3. PROVIDE PIPE GUIDE SUPPORT SPACED AS REQUIRED TO ADEQUATELY SUPPORT PIPE. SEE DETAIL C3, SHEET M-503. SEE SHEET M-201 AND STRUCTURAL SHEETS FOR SUPPORT ATTACHMENT TO BLDG.
4. PROVIDE PIPE ANCHOR CLAMP SUPPORT SPACED AS REQUIRED TO ADEQUATELY SUPPORT PIPE. SEE DETAIL C3, SHEET M-504. SEE SHEET M-201 AND STRUCTURAL SHEETS FOR SUPPORT ATTACHMENT TO BLDG.
5. PROVIDE PIPE EXPANSION JOINT ANCHOR ASSEMBLY, SEE DETAIL B1, SHEET M-503. SEE STRUCTURAL SHEETS FOR SUPPORT ATTACHMENT TO FACILITY.
6. PROVIDE PIPE GUIDE SUPPORT. SEE DETAIL C3, SHEET M-503. SEE STRUCTURAL SHEETS FOR SUPPORT ATTACHMENT TO BLDG.
7. PROVIDE CLEVIS HANGER SUPPORT. SPACE SUPPORTS AS REQUIRED TO ADEQUATELY SUPPORT PIPE. SECURE CLEVIS HANGER TO STRUCTURAL STEEL CEILING MEMBER. SEE DETAIL A3, SHEET M-504.

GRAPHIC SCALE

1/16" = 1'-0"

0 8' 16' 32'

APPR | DATE | DESCRIPTION | STM

NAVFAC

SEAL

A/E INFO

APPROVED
FOR RALPH DEAL 2/23/15
FOR COMMANDER NAVFAC

ACTIVITY
SATISFACTORY TO DATE 2-23-15
DES JMA | DRW JMA | CHK LDH
<<PM/DM>> R. M. RUSSELL
BRANCH MANAGER
ENGR DIRECTOR Ralph D. Deal
CUSTOMER

DEPARTMENT OF THE NAVY
NAVAL FACILITIES ENGINEERING COMMAND
PWD PORTSMOUTH
NAVAL FACILITIES ENGINEERING COMMAND ~ MID ATLANTIC
NORFOLK NAVAL SHIPYARD - PORTSMOUTH, VIRGINIA
NORFOLK NAVAL SHIPYARD
PORTSMOUTH, VIRGINIA

B260 EXTENSIVE REPAIRS

PARTIAL FLOOR PLAN - PIPE HANGER NEW WORK

SCALE: AS NOTED
EPROJECT NO.: 1146716
CONSTR. CONTR. NO. N40085-15-R-0018
NAVFAC DRAWING NO. 12682043
SHEET 89 OF 118

M-109

DRAWFORM REVISION: 10 MARCH 2009

FILE NAME: P:\VA\VNSY\Buildings\0260\2011_1146716_Nuclear Materials Wise Repairs\B_Design\Drawings\BLDG260-1146716-M-001 - 603.dwg LAYOUT NAME: M-109 PLOTTED: Tuesday, March 17, 2015 - 10:20am USER: Joy.Ashley

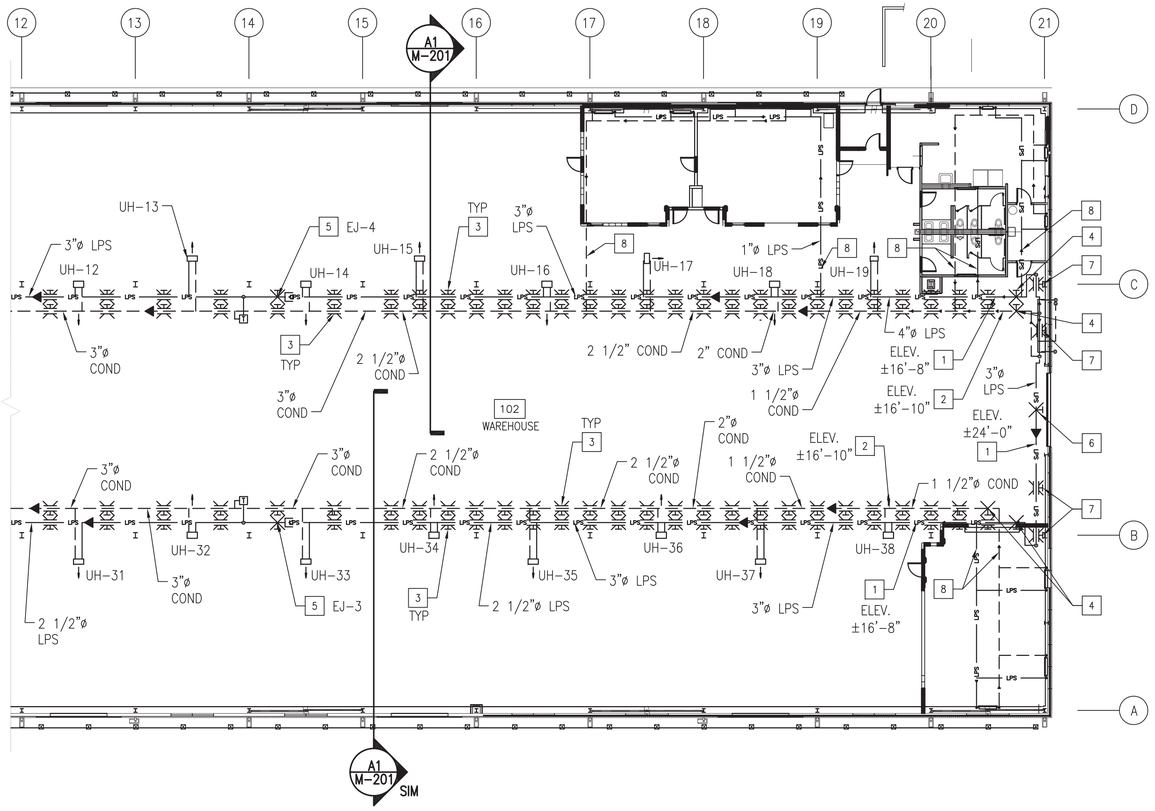

PARTIAL FIRST FLOOR PLAN - NORTH END

SCALE: 1/16" = 1'-0"

PLAN NORTH

GENERAL NOTES

1. COORDINATE ALL PIPING WITH STRUCTURAL FRAMING MEMBERS. PROVIDE HANGERS AND SUPPORTS FOR PIPING AS REQUIRED.
2. FIELD VERIFY ALL DIMENSIONS PRIOR TO INSTALLATION OF ALL EQUIPMENT, PIPING, AND ASSOCIATED SUPPORTS.
3. FIELD VERIFY ALL DIMENSIONS PRIOR TO INSTALLATION OF ALL EQUIPMENT, PIPING, AND ASSOCIATED SUPPORTS.
4. PROVIDE SLEEVE AND SEAL AT NEW PIPING PENETRATIONS IN WALL, ROOF, FLOOR, AND CEILING AS PER SPECIFICATIONS.
5. PROVIDE ALL NECESSARY CONTACTORS, STARTERS, TRANSFORMERS, RELAYS, WIRING, CONTROLS, AND CONDUIT NECESSARY FOR COMPLETE OPERATIONAL HVAC SYSTEMS.

[X] NEW WORK NOTES

1. PROVIDE STM PIPE. INSTALL PIPE AT APPROX. ELEVATION SHOWN. SLOPE PIPE 1 INCH FOR EVERY 16 FEET OF LENGTH IN DIRECTION OF FLOW. OFFSET PIPE AT MAIN LINE TRAPS AS REQUIRED TO MAINTAIN ELEVATION. PIPE LOCATION AS SHOWN ON THIS SHEET IS FOR CLARITY PURPOSES. INSTALL PIPE IN LOWER BAY AREA AS SHOWN IN DETAIL A1, SHEET M-201.
2. PROVIDE COND. PIPE. INSTALL PIPE AT APPROX. ELEVATION SHOWN. SLOPE PIPE 1 INCH FOR EVERY 16 FEET OF LENGTH IN DIRECTION OF FLOW. PIPE SHALL MAINTAIN CONTINUOUS SLOPE. PIPE LOCATION AS SHOWN ON THIS SHEET IS FOR CLARITY PURPOSES. INSTALL PIPE IN LOWER BAY AREA AS SHOWN IN DETAIL A1, SHEET M-201.
3. PROVIDE PIPE GUIDE SUPPORT SPACED AS REQUIRED TO ADEQUATELY SUPPORT PIPE. SEE DETAIL C3, SHEET M-503. SEE SHEET M-201 AND STRUCTURAL SHEETS FOR SUPPORT ATTACHMENT TO BLDG.
4. PROVIDE PIPE ANCHOR CLAMP SUPPORT SPACED AS REQUIRED TO ADEQUATELY SUPPORT PIPE. SEE DETAIL C3, SHEET M-504. SEE SHEET M-201 AND STRUCTURAL SHEETS FOR SUPPORT ATTACHMENT TO BLDG.
5. PROVIDE PIPE EXPANSION JOINT AND ANCHOR ASSEMBLY. SEE DETAIL B1, SHEET M-503. SEE STRUCTURAL SHEETS FOR SUPPORT ATTACHMENT TO FACILITY.
6. PROVIDE ANCHOR CLAMP SUPPORT. SEE DETAIL C3, SHEET M-504. SEE STRUCTURAL SHEETS FOR SUPPORT ATTACHMENT TO BLDG.
7. PROVIDE PIPE GUIDE SUPPORT. SEE DETAIL C3, SHEET M-503. SEE STRUCTURAL SHEETS FOR SUPPORT ATTACHMENT TO BLDG.
8. PROVIDE CLEVIS HANGER SUPPORT. SPACE SUPPORTS AS REQUIRED TO ADEQUATELY SUPPORT PIPE. SECURE CLEVIS HANGER TO STRUCTURAL STEEL CEILING MEMBER. SEE DETAIL A3, SHEET M-504.

KEY PLAN

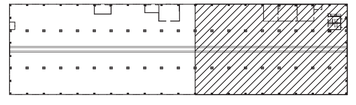

PLAN NORTH

GRAPHIC SCALE

1/16" = 1'-0" 0 8' 16' 32'

APPR	DATE	DESCRIPTION	STM

NAVFAC

SEAL

A/E INFO

APPROVED
FOR RALPH DEAL 2/23/15
FOR COMMANDER NAVFAC

ACTIVITY
SATISFACTORY TO DATE 3-24-15
DES JMA | DRW JMA | CHK LDH
<<PM/DM>> R. M. RUSSELL
BRANCH MANAGER
ENGR DIRECTOR Ralph D. Deal
CUSTOMER

DEPARTMENT OF THE NAVY
NAVAL FACILITIES ENGINEERING COMMAND
PWD PORTSMOUTH

NAVAL FACILITIES ENGINEERING COMMAND – MID ATLANTIC
NORFOLK NAVAL SHIPYARD – PORTSMOUTH, VIRGINIA

NORFOLK NAVAL SHIPYARD
PORTSMOUTH, VIRGINIA

B260 EXTENSIVE REPAIRS

PARTIAL FLOOR PLAN – PIPE HANGER NEW WORK

SCALE: AS NOTED
EPROJECT NO.: 1146716
CONSTR. CONTR. NO.: N40085-15-R-0018
NAVFAC DRAWING NO.: 12682044
SHEET 90 OF 118

M-110

DRAWFORM REVISION: 10 MARCH 2009

FILE NAME: P:\VA\NNSY\Buildings\0260\2011_1146716_Nuclear Materials Wise Reports\B_Design\Drawings\BLDG260-1146716-M-001 - 603.dwg LAYOUT NAME: M-110 PLOTTED: Tuesday, March 17, 2015 - 8:56am USER: JoyAshley

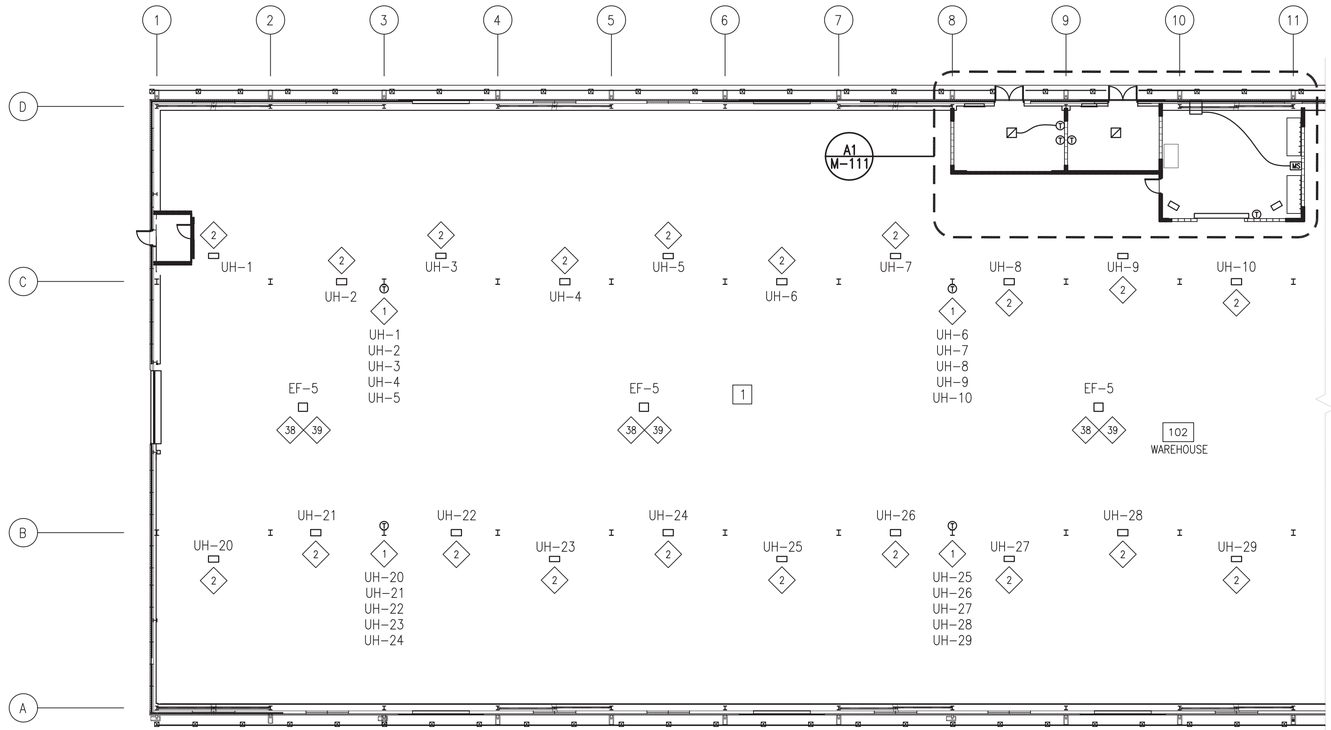

PARTIAL FIRST FLOOR PLAN - SOUTH END

SCALE: 1/16" = 1'-0"

PLAN NORTH

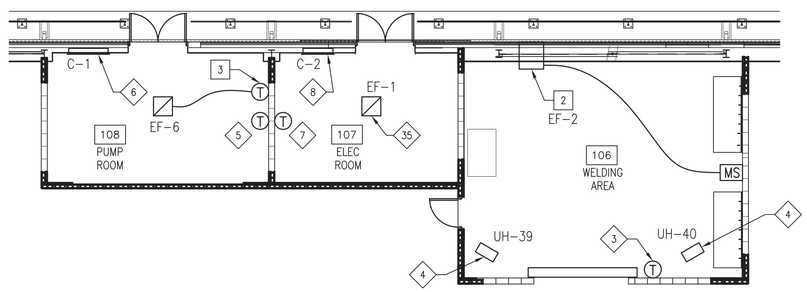

ENLARGED PLAN

SCALE: 1/8" = 1'-0"

A1
M-111
M-111

KEY PLAN

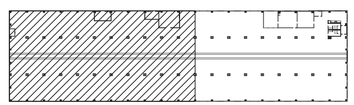

PLAN NORTH

GENERAL NOTES

1. COORDINATE ALL CONDUIT WITH STRUCTURAL FRAMING MEMBERS. PROVIDE HANGERS AND SUPPORTS FOR CONDUIT AS REQUIRED.
2. FIELD VERIFY ALL DIMENSIONS PRIOR TO INSTALLATION OF ALL EQUIPMENT, CONDUIT, AND ASSOCIATED SUPPORTS.
3. PROVIDE SLEEVE AND SEAL AT NEW CONDUIT PENETRATIONS IN WALL, ROOF, FLOOR, AND CEILING AS PER SPECIFICATIONS.
4. PROVIDE ALL NECESSARY CONTACTORS, STARTERS, TRANSFORMERS, RELAYS, WIRING, CONTROLS, AND CONDUIT NECESSARY FOR COMPLETE OPERATIONAL HVAC SYSTEMS.
5. SEE DIRECT DIGITAL CONTROL POINTS SCHEDULE, SHEET M-603, AND EQUIPMENT CONTROL DIAGRAMS, SHEETS M-604 AND M-605.
6. MOUNT CENTERLINE OF TEMPERATURE SENSORS AT 5'-0" AFF U.O.N.
7. PROVIDE A COMPLETE AND OPERATIONAL DIRECT DIGITAL CONTROL (DDC) SYSTEM INTEGRATED INTO THE EXISTING SEIMENS NSY BASEWIDE DDC SYSTEM. THE DDC SYSTEM SHALL INCLUDE ALL MODEMS, SENSORS, PANELS, TRANSFORMERS, CONTROLLERS, DAMPERS, SOFTWARE/HARDWARE, AND ANIMATED GRAPHICS OF THE EQUIPMENT/DEVICES. PROVIDE PERFORMANCE VERIFICATION TESTING (PVT) WITH A POINT-TO-POINT WRITTEN REPORT. SUBMIT DDC SYSTEM POINT LISTS, NETWORK CONTROL DIAGRAMS, AND MANUFACTURERS DATA FOR GOVERNMENT APPROVAL.

[X] NEW WORK NOTES

1. PROVIDE DIRECT DIGITAL CONTROLS TO HVAC EQUIPMENT AS SHOWN.
2. PROVIDE MANUAL ON-OFF CONTROL SWITCH FOR LOCAL CONTROL OF EXHAUST FAN IN APPROX. LOCATION AS SHOWN. MOUNT CENTERLINE OF SWITCH AT 5'-0" AFF.
3. PROVIDE THERMOSTAT FOR LOCAL CONTROL OF EXHAUST FAN IN APPROX. LOCATION AS SHOWN.

GRAPHIC SCALE

1/16" = 1'-0" 0 8' 16' 32'

1/8" = 1'-0" 0 4' 8' 16'

	APPR	DATE	DESCRIPTION	SYM

NAVFAC

SEAL

A/E INFO

APPROVED
FOR RALPH DEAL 2/23/15
FOR COMMANDER NAVFAC

ACTIVITY
3-26-15
SATISFACTORY TO DATE

DES JMA DRW JMA CHK LDH

<<PM/DM>> R. M. RUSSELL

BRANCH MANAGER

ENGR DIRECTOR Ralph D. Deal

CUSTOMER

DEPARTMENT OF THE NAVY
NAVAL FACILITIES ENGINEERING COMMAND
PWD PORTSMOUTH

NAVAL FACILITIES ENGINEERING COMMAND – MID ATLANTIC
NORFOLK NAVAL SHIPYARD – PORTSMOUTH, VIRGINIA

NORFOLK NAVAL SHIPYARD
PORTSMOUTH, VIRGINIA

B260 EXTENSIVE REPAIRS

PARTIAL FLOOR PLAN – HVAC CONTROLS

SCALE: AS NOTED

EPROJECT NO.: 1146716

CONSTR. CONTR. NO. N40085-15-R-0018

NAVFAC DRAWING NO. 12682045

SHEET 91 OF 118

M-111

DRAWFORM REVISION: 10 MARCH 2009

FILE NAME: P:\VA\VN57\Buildings\0260\2011_1146716_Nuclear Materials Wrse Repairs\B_Design\Drawings\BLDG260-1146716-M-001 - 603.dwg LAYOUT NAME: M-111 PLOTTED: Tuesday, March 17, 2015 - 10:22am USER: Joy.Ashley

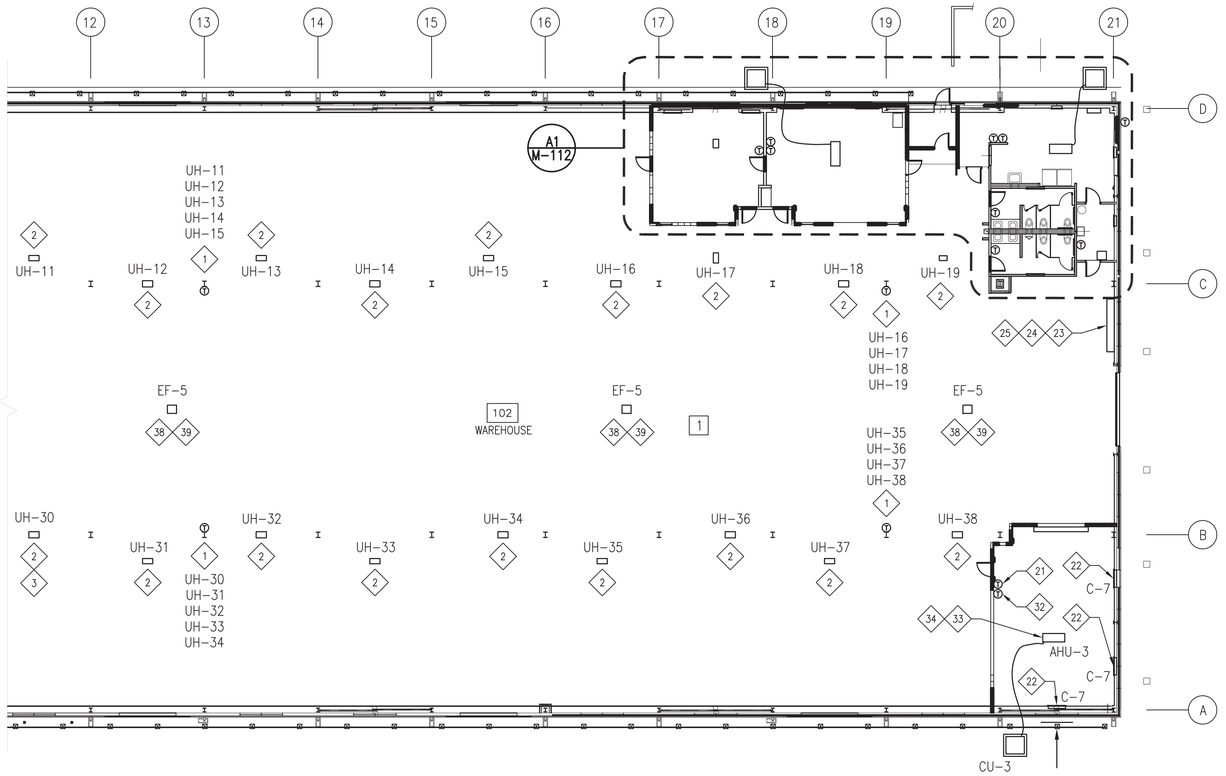

PARTIAL FIRST FLOOR PLAN - NORTH END

SCALE: 1/16" = 1'-0"

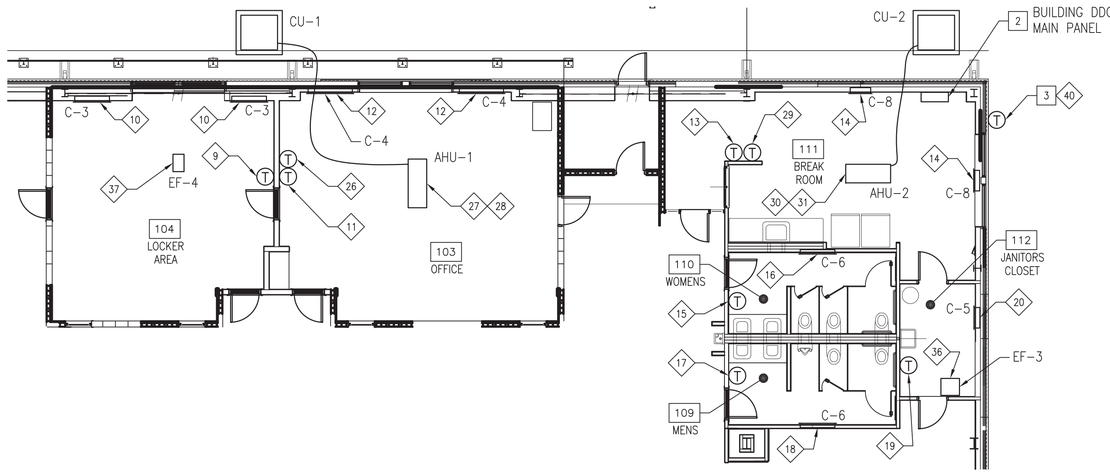

ENLARGED PLAN

SCALE: 1/8" = 1'-0"

A1
M-112

KEY PLAN

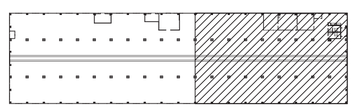

PLAN NORTH

GENERAL NOTES

1. COORDINATE ALL CONDUIT WITH STRUCTURAL FRAMING MEMBERS. PROVIDE HANGERS AND SUPPORTS FOR CONDUIT AS REQUIRED.
2. FIELD VERIFY ALL DIMENSIONS PRIOR TO INSTALLATION OF ALL EQUIPMENT, CONDUIT, AND ASSOCIATED SUPPORTS.
3. PROVIDE SLEEVE AND SEAL AT NEW CONDUIT PENETRATIONS IN WALL, ROOF, FLOOR, AND CEILING AS PER SPECIFICATIONS.
4. PROVIDE ALL NECESSARY CONTACTORS, STARTERS, TRANSFORMERS, RELAYS, WIRING, CONTROLS, AND CONDUIT NECESSARY FOR COMPLETE OPERATIONAL HVAC SYSTEMS.
5. SEE DIRECT DIGITAL CONTROL POINTS SCHEDULE, SHEET M-603, AND EQUIPMENT CONTROL DIAGRAMS, SHEETS M-604 AND M-605.
6. MOUNT CENTERLINE OF TEMPERATURE SENSORS AT 5'-0" AFF U.O.N.
7. PROVIDE A COMPLETE AND OPERATIONAL DIRECT DIGITAL CONTROL (DDC) SYSTEM INTEGRATED INTO THE EXISTING SEIMENS NSY BASEWIDE DDC SYSTEM. THE DDC SYSTEM SHALL INCLUDE ALL MODEMS, SENSORS, PANELS, TRANSFORMERS, CONTROLLERS, DAMPERS, SOFTWARE/HARDWARE, AND ANIMATED GRAPHICS OF THE EQUIPMENT/DEVICES. PROVIDE PERFORMANCE VERIFICATION TESTING (PVT) WITH A POINT-TO-POINT WRITTEN REPORT. SUBMIT DDC SYSTEM POINT LISTS, NETWORK CONTROL DIAGRAMS, AND MANUFACTURERS DATA FOR GOVERNMENT APPROVAL.

[X] NEW WORK NOTES

1. PROVIDE DIRECT DIGITAL CONTROLS FOR HVAC EQUIPMENT AS SHOWN.
2. PROVIDE BUILDING DDC MAIN PANEL AT LOCATION SHOWN. CONNECT BUILDING DDC SYSTEM TO (E) NSY INSTALLATION DDC SYSTEM FIBER OPTIC EQUIPMENT FOR COMMUNICATION WITH BASEWIDE SYSTEM. INSTALL (E) FIBER OPTIC EQUIPMENT WITHIN BUILDING DDC MAIN PANEL OR WITHIN AN ENCLOSURE MOUNTED BESIDE BUILDING DDC MAIN PANEL.
3. PROVIDE OUTSIDE AIR TEMPERATURE SENSOR. MOUNT CENTERLINE OF OUTSIDE TEMPERATURE SENSOR AT 13'-0" AFF.

GRAPHIC SCALE

1/16" = 1'-0" 0 8' 16' 32'

1/8" = 1'-0" 0 4' 8' 16'

NO.	DESCRIPTION	DATE	APPR

NAVFAC

SEAL

A/E INFO

APPROVED
FOR RALPH DEAL 2/23/15
FOR COMMANDER NAVFAC

ACTIVITY
SATISFACTORY TO DATE 3-24-15

DES JMA DRW JMA CHK LDH
<<PM/DM>> R. M. RUSSELL
BRANCH MANAGER
ENGR DIRECTOR Ralph D. Deal
CUSTOMER

DEPARTMENT OF THE NAVY
NAVAL FACILITIES ENGINEERING COMMAND
PWD PORTSMOUTH

NAVAL FACILITIES ENGINEERING COMMAND ~ MID ATLANTIC
NORFOLK NAVAL SHIPYARD - PORTSMOUTH, VIRGINIA

NORFOLK NAVAL SHIPYARD
PORTSMOUTH, VIRGINIA

B260 EXTENSIVE REPAIRS

PARTIAL FLOOR PLAN - HVAC CONTROLS

SCALE: AS NOTED
EPROJECT NO.: 1146716
CONSTR. CONTR. NO. N40085-15-R-0018
NAVFAC DRAWING NO. 12682046
SHEET 92 OF 118

M-112

DRAWFORM REVISION: 10 MARCH 2009

FILE NAME: P:\VA\VNSY\Buildings\0260\2011_1146716_Nuclear Materials Whse Repairs\B_Design\Drawings\BLDG260-1146716-M-001 - 603.dwg LAYOUT NAME: M-112 PLOTTED: Tuesday, March 17, 2015 - 10:24am USER: Joy.Ashley

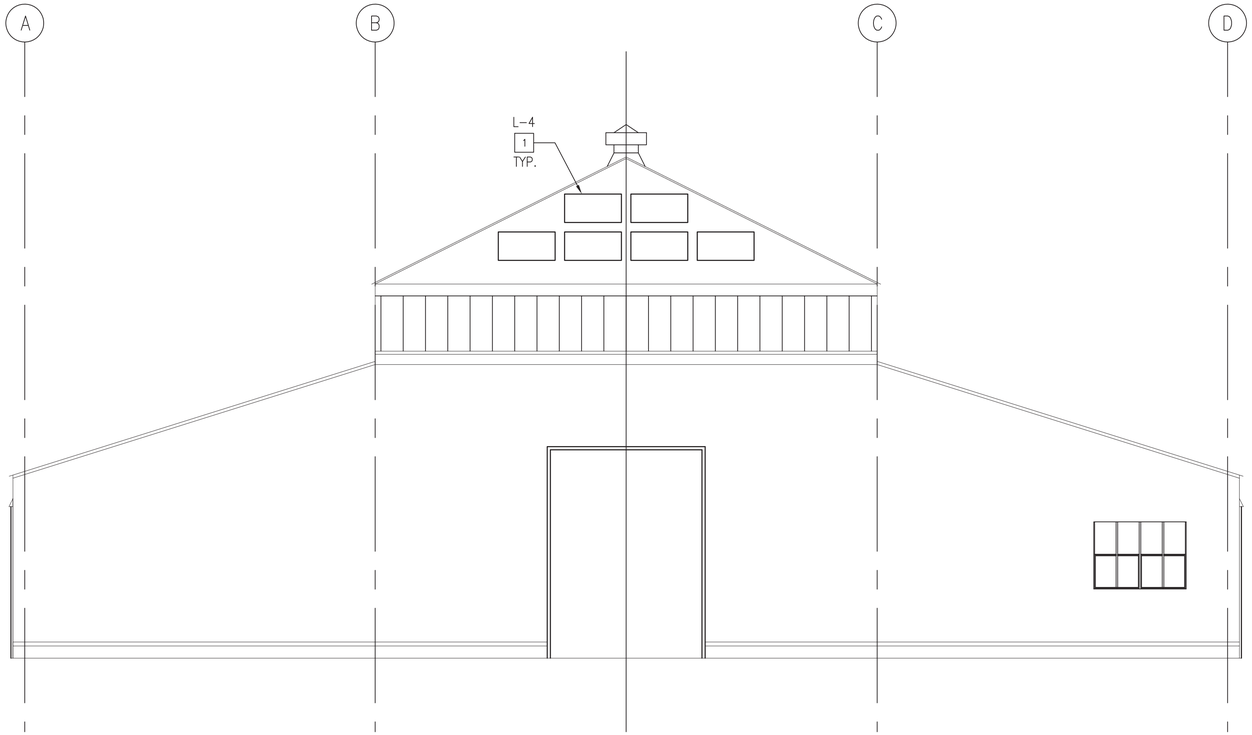

BUILDING EXTERIOR ELEVATION - NORTH END (SOUTH END ELEVATION SIMILAR)

SCALE: 1/8" = 1'-0"

C1 / M-201

M-102

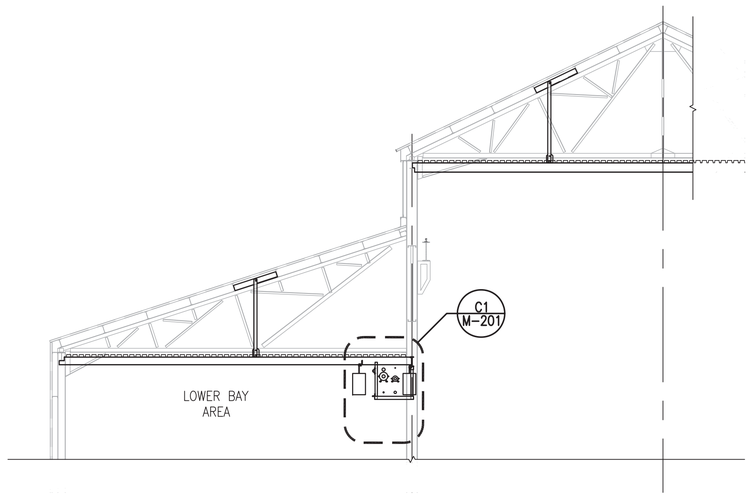

BUILDING INTERIOR PARTIAL SECTION

SCALE: 1/8" = 1'-0"

A1 / M-201

M-109

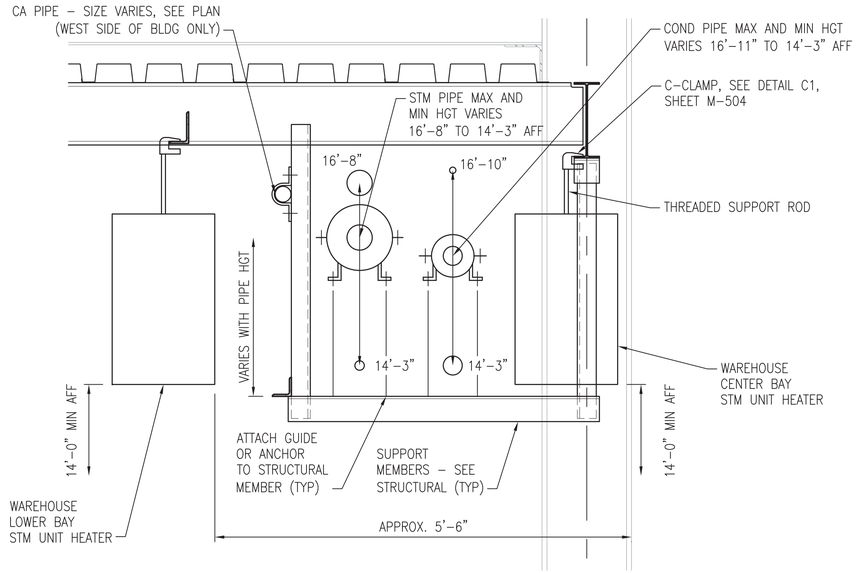

SECTION DETAIL

SCALE: 1" = 1'-0"

C1 / M-201

M-201

NEW WORK NOTES

1. PROVIDE LOUVER. TYPICAL NORTH AND SOUTH ENDS OF BUILDING. SEE LOUVER SCHEDULE, SHEET M-602.

GRAPHIC SCALE

1/8" = 1'-0" — 0 4' 8' 16'

1" = 1'-0" — 0 6" 1' 2'

SYM	DESCRIPTION	DATE	APPR

NAVFAC

SEAL

A/E INFO

APPROVED
FOR RALPH DEAL 3/23/15
FOR COMMANDER NAVFAC

ACTIVITY
SATISFACTORY TO DATE 3-23-15

DES	JMA	DRW	JMA	CHK	LDH

<<PM/DM>> R. M. RUSSELL
BRANCH MANAGER
ENGR DIRECTOR Ralph D. Deal
CUSTOMER

DEPARTMENT OF THE NAVY
NAVAL FACILITIES ENGINEERING COMMAND
PWD PORTSMOUTH

NAVAL FACILITIES ENGINEERING COMMAND ~ MID ATLANTIC
NORFOLK NAVAL SHIPYARD - PORTSMOUTH, VIRGINIA

NORFOLK NAVAL SHIPYARD
PORTSMOUTH, VIRGINIA

B260 EXTENSIVE REPAIRS

BUILDING SECTION AND ELEVATION – MECHANICAL NEW WORK

SCALE: AS NOTED
EPROJECT NO.: 1146716
CONSTR. CONTR. NO.: N40085-15-R-0018
NAVFAC DRAWING NO.: 12682047
SHEET 93 OF 118

M-201

DRAWFORM REVISION: 10 MARCH 2009

FILE NAME: P:\VA\NNSY\Buildings\0260\2011_1146716_Nuclear Materials Wrse Repairs\B_Design\Drawings\BLD0260-1146716-M-001 - 603.dwg LAYOUT NAME: M-201 PLOTTED: Friday, March 20, 2015 - 1:39pm USER: Jay Ashley

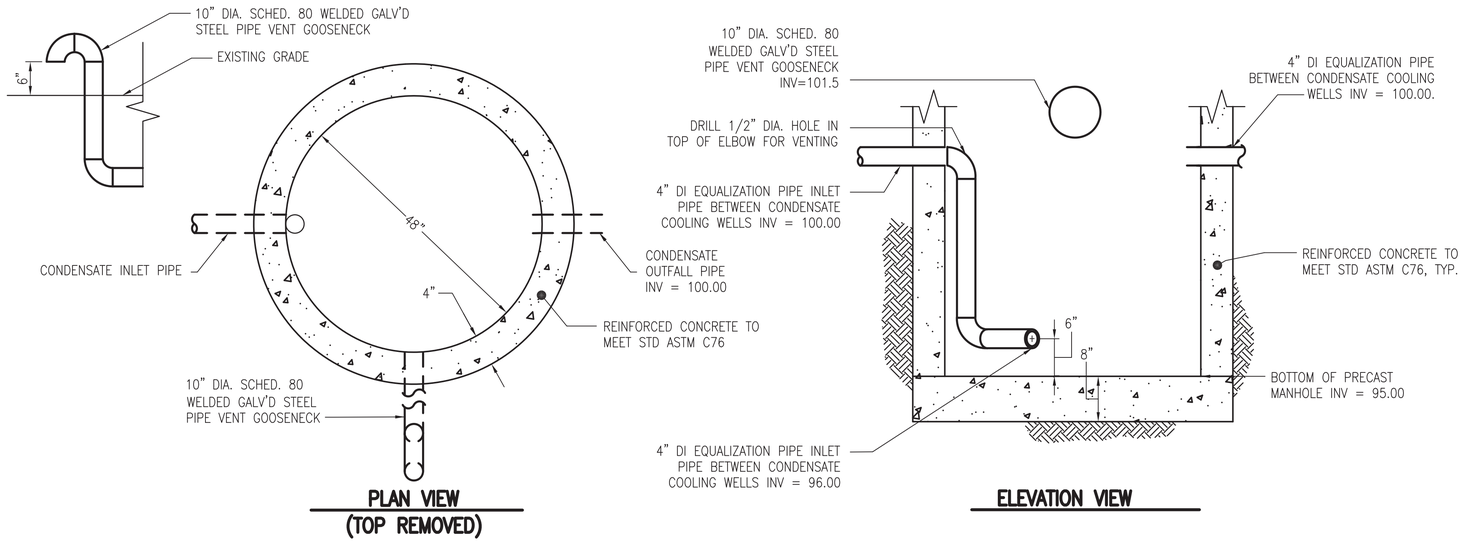

CONDENSATE COOLING WELL DETAIL

SCALE: NTS

M-101 — C1 / M-501

NOTES:
1. FABRICATE COOLING WELL FROM PRECAST CONCRETE MANHOLE W/ A SOLID COVER. SET BOTTOM ON COMPACTED SOIL.
2. CAULK COOLING WELL BOTTOM SEAM AND ALL PIPE PENETRATIONS WITH CEMENT MORTAR.
3. SEE PLANS FOR PIPE SIZES, LOCATIONS AND ORIENTATIONS.
4. ALL DRAINAGE STRUCTURES SHALL BE TRAFFIC RATED AND MEET VDOT STANDARDS. FRAMES FOR GRATES AND COVERS SHALL BE CAST OF GRAY IRON CONFORMING TO ASTM A48, CLASS 35B. GRATES AND COVERS SHALL BE CAST OF GRAY IRON CONFORMING TO ASTM A48, CLASS 35B, OR DUCTILE IRON CONFORMING TO ASTM A536, GRADE 80-55-06.

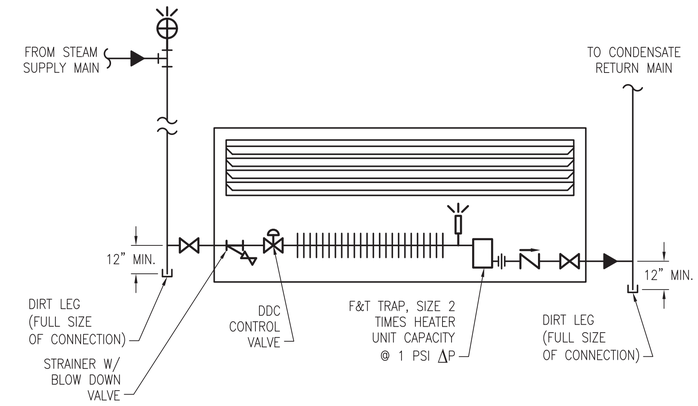

STEAM CONVECTOR (C-#) DETAIL

SCALE: NTS

M-103, M-104, M-105, M-106 — C4 / M-501

NOTES:
1. THE CONVECTOR ENCLOSURE SHALL ENCLOSE THE VALVES AS SHOWN.
2. SLOPE THE FINNED-TUBE ELEMENT FOR MAXIMUM DRAINAGE.
3. MOUNT CONVECTORS IN ACCORDANCE WITH MANUFACTURER'S INSTRUCTIONS

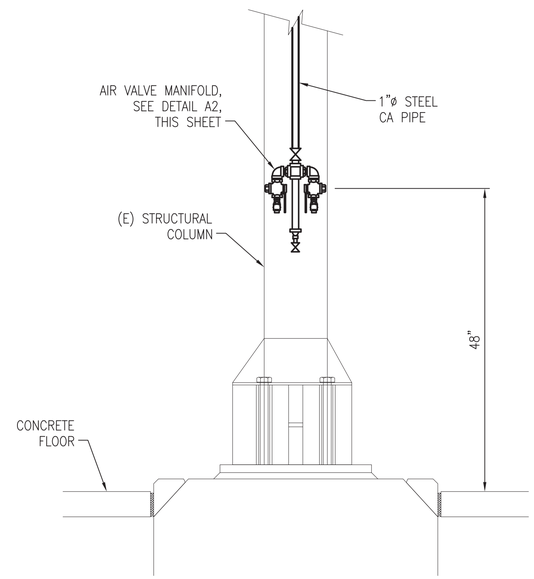

TYPICAL AIR VALVE MANIFOLD MOUNTING DETAIL

SCALE: NTS

M-107, M-108 — A1 / M-501

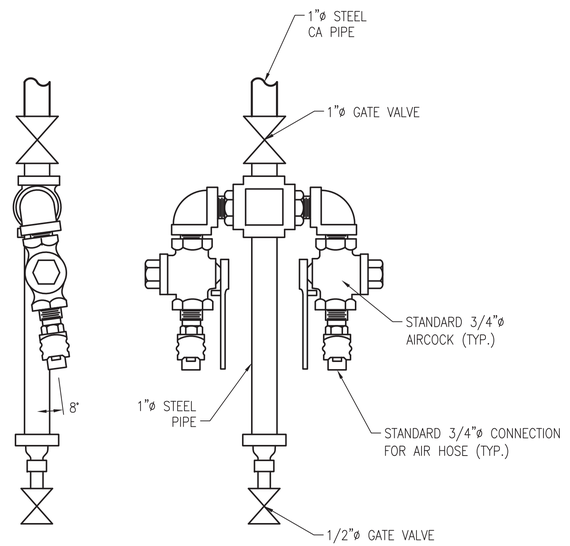

TYPICAL AIR VALVE MANIFOLD DETAIL

SCALE: NTS

M-107, M-108, M-501 — A2 / M-501

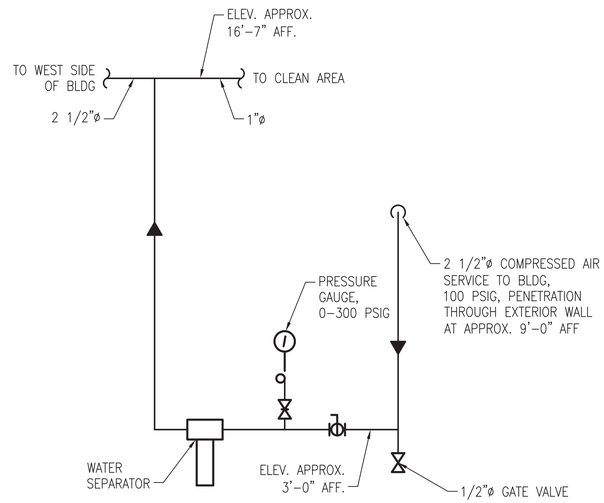

COMPRESSED AIR PIPING DETAIL

SCALE: NTS

M-108 — A4 / M-501

APPR			
DATE			
SYM	DESCRIPTION		

NAVFAC

SEAL

A/E INFO

APPROVED
FOR COMMANDER NAVFAC — 3/23/15

ACTIVITY
SATISFACTORY TO — DATE 3-24-15

DES	JMA	DRW JMA	CHK LDH
<<PM/DM>>	R. M. RUSSELL		
BRANCH MANAGER			
ENGR DIRECTOR	Ralph D. Deal		
CUSTOMER			

DEPARTMENT OF THE NAVY
NAVAL FACILITIES ENGINEERING COMMAND
PWD PORTSMOUTH
NAVAL FACILITIES ENGINEERING COMMAND ~ MID ATLANTIC
NORFOLK NAVAL SHIPYARD - PORTSMOUTH, VIRGINIA
NORFOLK NAVAL SHIPYARD
PORTSMOUTH, VIRGINIA

B260 EXTENSIVE REPAIRS

MECHANICAL DETAILS

SCALE:	AS NOTED
EPROJECT NO.:	1146716
CONSTR. CONTR. NO.	N40085-15-R-0018
NAVFAC DRAWING NO.	12682048
SHEET	94 OF 118

M-501

DRAWFORM REVISION: 10 MARCH 2009

FILE NAME: P:\VA\VNS\Buildings\0260\2011_1146716_Nuclear Materials Whse Repairs\B_Design\Drawings\BLDG260-1146716-M-001 - 603.dwg LAYOUT NAME: M-501 PLOTTED: Tuesday, March 17, 2015 - 8:59am USER: JoyAshley

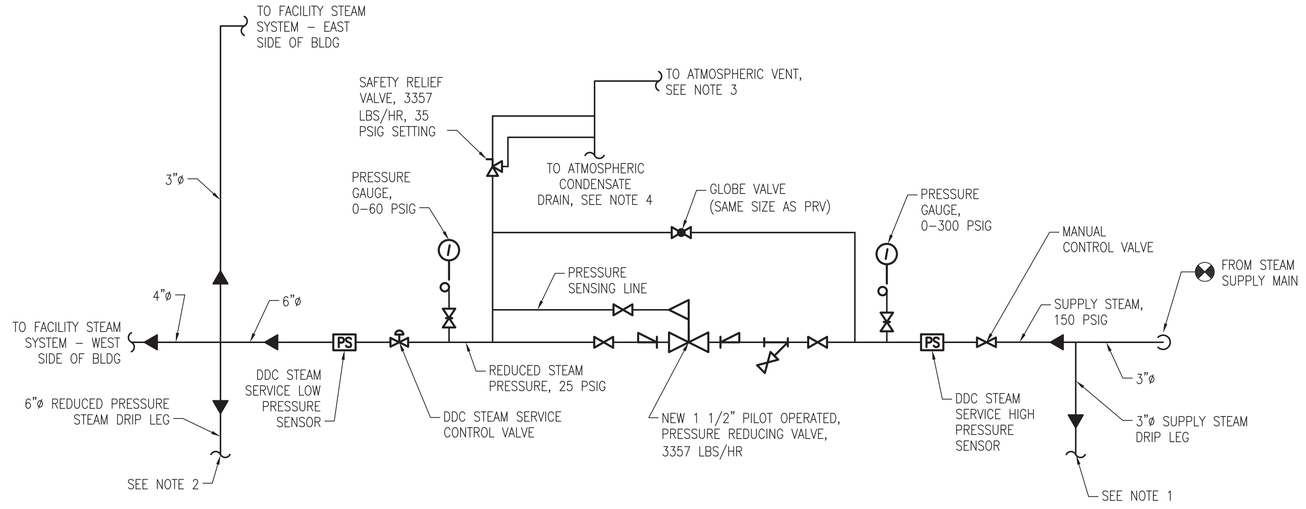

STEAM PRESSURE REDUCING STATION

SCALE: NTS

B1 / M-502 — MD103, M–105

NOTES:

1. PROVIDE HIGH PRESSURE STEAM DRIP TRAP ASSEMBLY DETAIL, SEE DETAIL C4 THIS SHEET.
2. PROVIDE REDUCED PRESSURE STEAM DRIP TRAP ASSEMBLY DETAIL, SEE DETAIL B4 THIS SHEET. STEAM TRAP SHALL BE SIZED FOR 203 LBS/HR @ 1/2 PSI ΔP
3. VENT SAFETY RELIEF DISCHARGE THROUGH (E) EXTERIOR WALL PENETRATION.
4. DRAIN SAFETY RELIEF CONDENSATE THROUGH (E) EXTERIOR WALL CONDENSATE DRAIN PENETRATION.

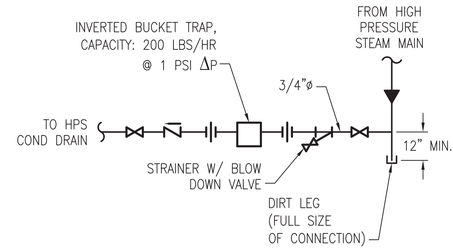

HIGH PRESSURE STEAM DRIP TRAP ASSEMBLY DETAIL

SCALE: NTS

C4 / M-502 — M–502

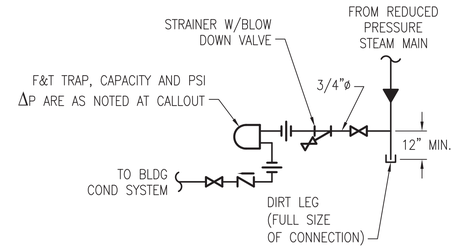

REDUCED PRESSURE STEAM DRIP TRAP ASSEMBLY DETAIL

SCALE: NTS

B4 / M-502 — M–101, M–102, M–502

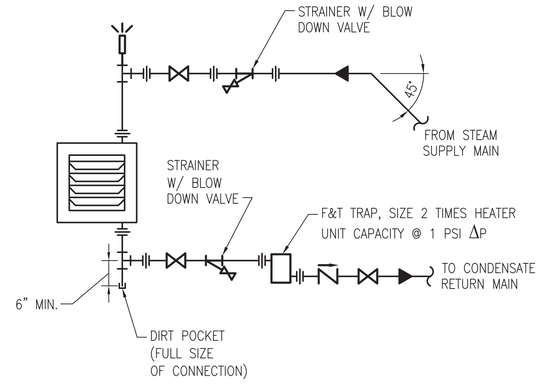

STEAM UNIT HEATER (UH-#) DETAIL

SCALE: NTS

A4 / M-502 — M–101, M–102, M–103

APPR	DATE	DESCRIPTION	SYM

NAVFAC

SEAL

A/E INFO

APPROVED
FOR RALPH DEAL 3/23/15
FOR COMMANDER NAVFAC

ACTIVITY

SATISFACTORY TO DATE 3-23-15

DES	DRW	CHK
JMA	JMA	LDH

<<PM/DM>> R. M. RUSSELL
BRANCH MANAGER
ENGR DIRECTOR Ralph D. Deal
CUSTOMER

DEPARTMENT OF THE NAVY
NAVAL FACILITIES ENGINEERING COMMAND
PWD PORTSMOUTH

NAVAL FACILITIES ENGINEERING COMMAND ~ MID ATLANTIC
NORFOLK NAVAL SHIPYARD – PORTSMOUTH, VIRGINIA

NORFOLK NAVAL SHIPYARD
PORTSMOUTH, VIRGINIA

B260 EXTENSIVE REPAIRS

MECHANICAL DETAILS

SCALE: AS NOTED
EPROJECT NO: 1146716
CONSTR. CONTR. NO: N40085-15-R-0018
NAVFAC DRAWING NO: 12682049
SHEET 95 OF 118

M-502

DRAWFORM REVISION: 10 MARCH 2009

FILE NAME: P:\VA\NNSY\Buildings\0260\2011_1146716_Nuclear Materials Wise Repairs\B_Design\Drawings\BLD0260-1146716-M-001 – 603.dwg LAYOUT NAME: M–502 PLOTTED: Tuesday, March 17, 2015 – 9:08am USER: JoyAshley

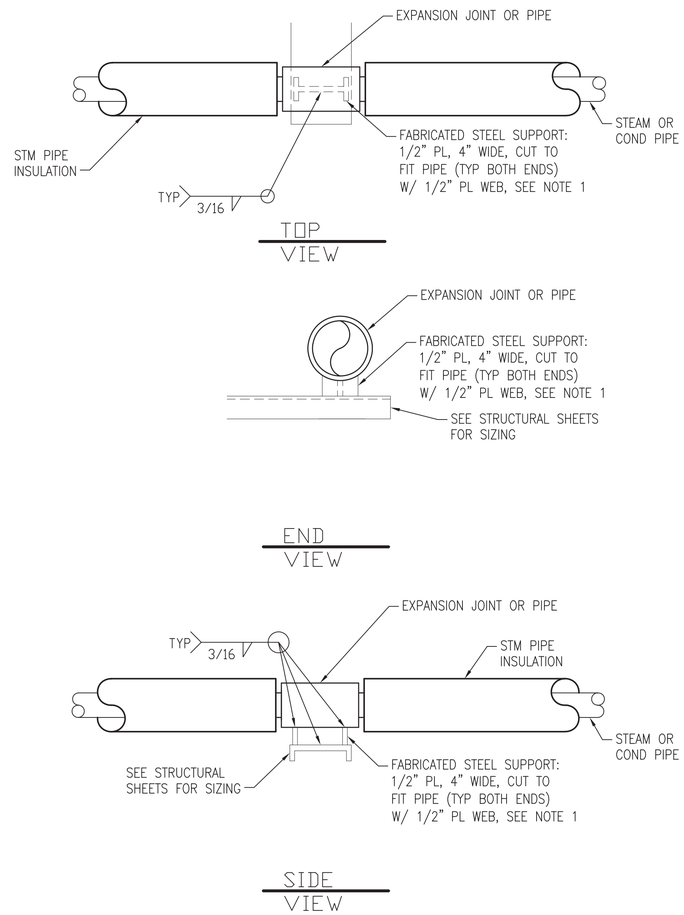

PIPE ANCHOR/EXPANSION JOINT ANCHOR ASSEMBLY DETAIL

B1 M-503

SCALE: NTS

M-109, M-110

NOTES:
1. IF EXPANSION JOINT DOES NOT INCLUDE AN ANCHOR BASE, CONTRACTOR MAY SUBSTITUTE A FABRICATED STEEL SUPPORT AS SHOWN OR A 10" I-BEAM.
2. ALL REQUIRED FASTENERS SHALL BE CRES.

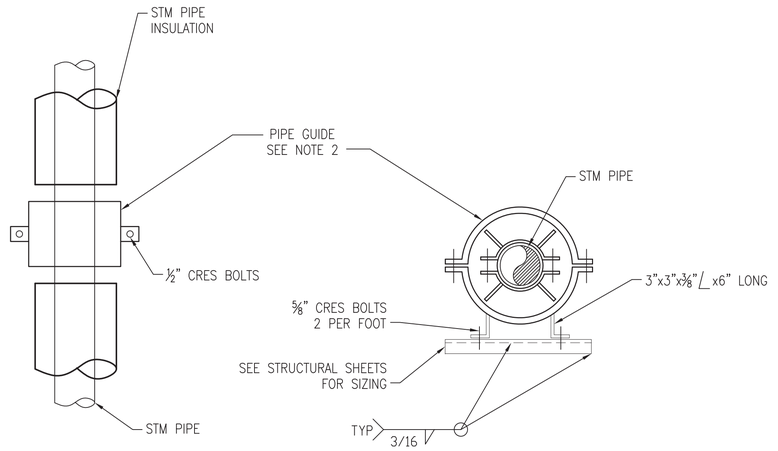

STEAM PIPE GUIDE SUPPORT DETAIL

C3 M-503

SCALE: NTS

M-109, M-110

NOTES:
1. PROVIDE A PIPE GUIDE SIZED TO PROVIDE FOR FREE AXIAL MOVEMENT OF THE STM PIPE ASSEMBLY WITHIN THE GUIDE SUPPORT.
2. ALL REQUIRED FASTENERS SHALL BE CRES.

PIPE EXPANSION JOINT SCHEDULE

TAG	TYPE	SIZE (IN)	PRESSURE (PSIG)	MIN. AXIAL COMPRESSION (IN)	SERVICE	REMARKS
EJ-1	SINGLE ENCLOSED BELLOWS WITH ANCHOR BASE	2	25	3.0	STEAM	WELD ENDS
EJ-2	SINGLE ENCLOSED BELLOWS WITH ANCHOR BASE	2 1/2	25	3.0	STEAM	WELD ENDS
EJ-3	SINGLE ENCLOSED BELLOWS WITH ANCHOR BASE	3	25	3.0	STEAM	WELD ENDS
EJ-4	SINGLE ENCLOSED BELLOWS WITH ANCHOR BASE	4	25	3.0	STEAM	WELD ENDS
EJ-5	DOUBLE ENCLOSED BELLOWS WITH ANCHOR BASE	4	25, SEE NOTE 1	8.0	CONDENSATE	WELD ENDS

NOTES:
1. COND SYSTEM IS NOT INTENDED TO BE PRESSURIZED BUT IT COULD EXPERIENCE STM SYSTEM PRESSURES. EXPANSION JOINT SELECTION SHALL BE BASED ON MAXIMUM PRESSURE OF 25 PSIG FOR COND SYSTEM.

SYM	DESCRIPTION	DATE	APPR

NAVFAC

SEAL

A/E INFO

APPROVED
FOR RALPH DEAL 3/23/15
FOR COMMANDER NAVFAC

ACTIVITY

SATISFACTORY TO DATE 3-23-15

DES JMA DRW JMA CHK LDH

<<PM/DM>> R. M. RUSSELL

BRANCH MANAGER

ENGR DIRECTOR Ralph D. Deal

CUSTOMER

DEPARTMENT OF THE NAVY
NAVAL FACILITIES ENGINEERING COMMAND
PWD PORTSMOUTH

NAVAL FACILITIES ENGINEERING COMMAND ~ MID ATLANTIC
NORFOLK NAVAL SHIPYARD - PORTSMOUTH, VIRGINIA

NORFOLK NAVAL SHIPYARD PORTSMOUTH, VIRGINIA

B260 EXTENSIVE REPAIRS

MECHANICAL DETAILS

SCALE: AS NOTED

EPROJECT NO.: 1146716

CONSTR. CONTR. NO. N40085-15-R-0018

NAVFAC DRAWING NO. 12682050

SHEET 96 OF 118

M-503

DRAWFORM REVISION: 10 MARCH 2009

FILE NAME: P:\VA\NNSY\Buildings\0260\2011_1146716_Nuclear Materials Whse Repairs\B_Design\Drawings\BLDG260-1146716-M-001 - 603.dwg LAYOUT NAME: M-503 PLOTTED: Tuesday, March 17, 2015 - 9:10am USER: JayAshley

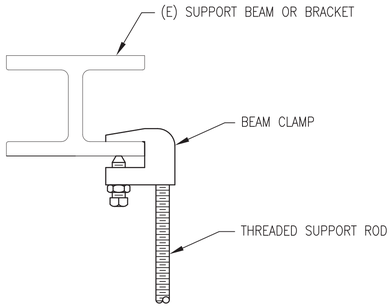

TOP FLANGE C-CLAMP SUPPORT DETAIL

C1 / M-504

SCALE: NTS

M-201

NOTES:
1. SIZE BEAM CLAMP TO ADEQUATELY SUPPORT PIPE SIZE.
2. SIZE SUPPORT ROD TO ADEQUATELY SUPPORT HANGER AND PIPE LOAD.

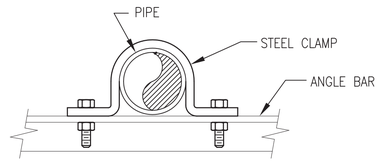

ANCHOR CLAMP SUPPORT DETAIL

C3 / M-504

SCALE: NTS

M-109, M-110

NOTES:
1. SIZE ANCHOR CLAMP SIZE BASED UPON PIPE SIZE AND AS RECOMMENDED BY THE MANUFACTURER.
2. ALL REQUIRED FASTENERS SHALL BE CRES.
3. ANGLE BAR SHALL BE WELDED TO STRUCTURAL OR STATIONARY MEMBER.

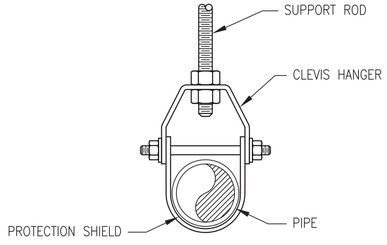

CLEVIS HANGER DETAIL

A3 / M-504

SCALE: NTS

M-109, M-110

NOTES:
1. SIZE HANGER TO ADEQUATELY SUPPORT PIPE SIZE.
2. SIZE HANGER TO FIT INSULATED PIPE AS REQUIRED.
3. SIZE SUPPORT ROD TO ADEQUATELY SUPPORT HANGER AND PIPE LOAD.
4. SUPPORT FROM BUILDING STEEL STRUCTURAL MEMBER WITH C-CLAMP.

APPR	DATE	DESCRIPTION	SYM

NAVFAC

SEAL

A/E INFO

APPROVED
FOR RALPH DEAL 3/23/15
FOR COMMANDER NAVFAC

ACTIVITY
SATISFACTORY TO DATE 3-23-15

DES	JMA	DRW	JMA	CHK	LDH

<<PM/DM>> R. M. RUSSELL
BRANCH MANAGER
ENGR DIRECTOR Ralph D. Deal
CUSTOMER

DEPARTMENT OF THE NAVY
NAVAL FACILITIES ENGINEERING COMMAND
PWD PORTSMOUTH
NAVAL FACILITIES ENGINEERING COMMAND – MID ATLANTIC
NORFOLK NAVAL SHIPYARD – PORTSMOUTH, VIRGINIA
NORFOLK NAVAL SHIPYARD
PORTSMOUTH, VIRGINIA

B260 EXTENSIVE REPAIRS

MECHANICAL DETAILS

SCALE: AS NOTED
EPROJECT NO.: 1146716
CONSTR. CONTR. NO.
N40085-15-R-0018
NAVFAC DRAWING NO.
12682051
SHEET 97 OF 118

M-504

DRAWFORM REVISION: 10 MARCH 2009

FILE NAME: P:\VA\VNSY\Buildings\0260\2011_1146716_Nuclear Materials Wtse Repairs\B_Design\Drawings\BLDG260-1146716-M-001 - 603.dwg LAYOUT NAME: M-504 PLOTTED: Tuesday, March 17, 2015 - 9:11am USER: JoyAshley

AIR CONDITIONING SCHEDULE

TAG	DESCRIPTION	INDOOR EVAPORATOR FAN					DIRECT EXPANSION COOLING					ELECTRIC HEATING			ELECTRICAL						REMARKS
															CONDENSING UNIT			AIR HANDLING UNIT			
		DRIVE TYPE	SUPPLY AIRFLOW (CFM)	OUTSIDE AIRFLOW (CFM)	EXTERNAL STATIC PRESSURE (IN. WG)	HP	EAT DB (°F)	EAT WB (°F)	TOTAL CAPACITY (BTU/HR)	SENSIBLE CAPACITY (BTU/HR)	REFRIG. CIRCUITS	RETURN AIR DB (°F)	HEATING CAPACITY (BTU/HR)	MINIMUM SUPPLEMENTAL ELECTRIC COIL CAPACITY (kW)	VOLTS/ PHASE	MIN CIRCUIT PROTECTION (AMP)	MAX OVERLOAD PROTECTION (AMP)	VOLTS/ PHASE	MIN CIRCUIT PROTECTION (AMP)	MAX OVERLOAD PROTECTION (AMP)	
AHU-1/CU-1	SPLIT SYSTEM COOLING ONLY	BELT	1390	340	0.48	1	80.4	67.1	55539	39439	1	–	–	–	208/1	35	60	208/1	10	15	SEE NOTES 1 THROUGH 3
AHU-2/CU-2	SPLIT SYSTEM COOLING ONLY	BELT	1000	170	0.29	1/2	79.1	66.0	39461	28130	1	–	–	–	208/1	26	45	208/1	5	15	SEE NOTES 1 THROUGH 3
AHU-3/CU-3	SPLIT SYSTEM COOLING ONLY	BELT	960	80	0.24	1/2	77.5	64.6	32419	23634	1	–	–	–	208/1	20	35	208/1	5	15	SEE NOTES 1 THROUGH 3

NOTES:
1. PROVIDE NEOPRENE VIBRATION ISOLATORS OF ADEQUATE QUANTITY AND SIZE TO SUPPORT AHU's AND CU's.
2. PROVIDE P-TRAPS IN CONDENSATE DRAIN PIPING AT EACH AHU UNLESS THE AHU IS EQUIPPED WITH AN INTERNAL TRAP.
3. HVAC EQUIPMENT SHALL COMPLY WITH ASHRAE 90.1 ENERGY STANDARDS.

EQUIPMENT NOTES

CU 1-3/AHU 1-3:

PROVIDE A FACTORY ASSEMBLED, ELECTRICALLY CONTROLLED, AIR TO AIR SPLIT SYSTEM AIR CONDITIONING SYSTEM. COOLING CAPACITIES SHALL BE AS SPECIFIED.

CONDENSING UNIT (CU) AND AIR HANDLING UNIT (AHU) SHALL COMPRISE A SPLIT SYSTEM AND BE OF THE SAME MANUFACTURER.

CU 1-3 (CONDENSING UNIT):

THE OUTDOOR CONDENSING UNIT SHALL BE A FACTORY ASSEMBLED, SINGLE PIECE UNIT. THE CONDENSING UNIT SHALL CONSIST OF A FULLY HERMETIC SCROLL TYPE COMPRESSOR, AIR COOLED COIL, AND OUTDOOR FAN.

OUTDOOR CABINET SHALL BE CONSTRUCTED OF GALVANIZED STEEL WITH A BAKED-ENAMEL FINISH. INTERNAL UNIT COMPONENTS SHALL BE ACCESSIBLE BY REMOVABLE ACCESS PANELS WITH MINIMAL SCREWS.

CONDENSING UNIT COIL SHALL BE CONSTRUCTED OF EPOXY COATED COPPER TUBING AND ALUMINUM FINS. CONDENSER COIL SHALL BE PROTECTED WITH HAIL/VANDEL GUARDS.

OUTDOOR FAN SHALL BE OF DIRECT-DRIVE PROPELLER TYPE THAT IS ORIENTED TO DISCHARGE AIR VERTICALLY. FAN SHAFT AND BLADES SHALL BE CORROSION RESISTANT. FAN MOTORS SHALL BE TOTALLY ENCLOSED AND PROTECTED FROM THERMAL INTERNAL OVERLOAD.

UNIT SHALL INCORPORATE THE FOLLOWING SAFETIES AS A MINIMUM:

1. COMPRESSOR OVERTEMPERATURE, OVERCURRENT
2. LOSS-OF-CHARGE/LOW-PRESSURE SWITCH
3. FREEZE PROTECTION THERMOSTAT, EVAPORATOR COIL
4. HIGH-PRESSURE SWITCH
5. AUTOMATIC RESET MOTOR THERMAL OVERLOAD PROTECTOR

AHU 1-3 (AIR HANDLING UNIT):

EVAPORATOR COMPARTMENT SHALL BE INSULATED AND HAVE A DRAIN PAN MADE OF NON-CORROSIVE MATERIAL.

INDOOR FAN SHALL BE DOUBLE-INLET TYPE WITH FORWARD CURVED BLADES AND BELT DRIVEN. BELT-DRIVE SHALL HAVE AN ADJUSTABLE-PITCH MOTOR PULLEY.

FILTER SECTION SHALL BE ACCESSIBLE THROUGH AN ACCESS PANEL WITH "NO-TOOL REMOVAL". FILTER SHALL BE EASILY REPLACEABLE WITH A THROWAWAY 2-INCH THICK FILTER.

EVAPORATOR SECTION OF THE AIR HANDLING UNIT SHALL INCORPORATE A COOLING COIL CONSTRUCTED OF COPPER TUBES AND ALUMINUM FINS.

EXHAUST FAN SCHEDULE

TAG	TYPE	AIRFLOW (CFM)	STATIC PRESSURE (IN WG)	DRIVE TYPE	SOUND (DBA)	FAN MOTOR		VOLTS/ PHASE	REMARKS
						HP	RPM		
EF-1	CEILING MOUNTED CENTIFUGAL	50	0.03	DIRECT	<20	0.026	550	120/1	SEE NOTES 2, 3, AND 4
EF-2	WALL MOUNTED CENTRIFUGAL	4000	0.125	BELT	73	0.5	1248	120/1	SEE NOTES 1 AND 4
EF-3	INLINE CENTRIFUGAL	570	0.33	BELT	76	0.167	1629	120/1	SEE NOTES 2, 3, AND 4
EF-4	INLINE CENTRIFUGAL	350	0.21	BELT	78	0.167	1965	120/1	SEE NOTES 2, 3, AND 4
EF-5	TUBULAR INLINE CENTIFUGAL	3200	0.30	BELT	87	1.0	1650	120/1	SEE NOTES 2, 3, AND 4
EF-6	CEILING MOUNTED CENTIFUGAL	200	0.1	DIRECT	53	0.13	1100	120/1	SEE NOTES 2, 3, AND 4

NOTES:
1. PACKAGED WALL FAN INCLUDES AN ALUMINUM PROPELLER FAN, INTREGAL HOUSING, SHUTTER, INLET GUARD, AND GALVANIZED BIRD SCREEN.
2. PROVIDE HANGING NEOPRENE ISOLATORS AND SUPPORT MEMBERS TO SECURE FAN TO ROOF RAFTERS OR STRUCTURAL MEMBERS.
3. PROVIDE NEOPRENE FLEXIBLE DUCT CONNECTIONS BETWEEN FAN AND METAL DUCTWORK.
4. PROVIDE DISCONNECT SWITCH FOR FAN.

STEAM PRESSURE REDUCING STATION SCHEDULE

TAG	CAPACITY (LBS/HR)	PRV SIZE (IN)	INLET STEAM PRESSURE (PSIG)	OUTLET STEAM PRESSURE (PSIG)	SAFETY RELIEF VALVE SET (PSIG)	INLET PIPE SIZE (IN)	OUTLET PIPE SIZE (IN)	INLET PIPE RATING (LBS)	OUTLET PIPE RATING (LBS)	REMARKS
PRV-1	3357	1 1/2	150	25	35	3	6	300	150	PILOT OPERATED

DUCT CONSTRUCTION AND LEAK TEST SCHEDULE

TAG	DUCT PRESSURE CLASS INCHES WATER COLUMN				SUPPLY				RETURN/ OUTSIDE AIR		DUCT TEST PRESSURE INCHES WATER COLUMN			
					ROUND/OVAL		RECTANGLE							
	SUPPLY DUCT	RETURN DUCT	EXHAUST DUCT	OUTSIDE AIR DUCT	DUCT SEAL CLASS	DUCT LEAK CLASS	DUCT SEAL CLASS	DUCT LEAK CLASS	DUCT SEAL CLASS	DUCT LEAK CLASS	SUPPLY DUCT	RETURN DUCT	EXHAUST DUCT	OUTSIDE AIR DUCT
AHU	2	–	–	–	A	6	–	–	–	–	2	–	–	–
	–	-1	–	-1	–	–	–	–	A	12	–	-1	–	-1
EF	–	–	-1	–	A	12	–	–	–	–	–	–	-1	–

NOTES:
1. TEST IN ACCORDANCE WITH SPEC SECTION 15950, HVAC TESTING/ADJUSTING/BALANCING AND THE PROCEDURES IN SMACNA HVAC AIR DUCT LEAKAGE TEST MANUAL, 1985 EDITION.

DESIGN CONDITIONS

SPACE USAGE	SUMMER				WINTER	
	SPACE DB TEMP. (°F)	SPACE HUMIDITY (%RH)	O.A.T. DB (°F)	O.A.T. WB (°F)	SPACE DB TEMP. (°F)	O.A.T. DB (°F)
WAREHOUSE	VENTILATION AIR CONDITIONS		94	79	48	20
OTHER SPACES	76	50	94	79	68	20

APPR | DATE | DESCRIPTION | SYM

NAVFAC

SEAL

A/E INFO

APPROVED
FOR RALPH DEAL 3/23/15
FOR COMMANDER NAVFAC

ACTIVITY
SATISFACTORY TO DATE 3-23-15

DES JMA | DRW JMA | CHK LDH
<<PM/DM>> R. M. RUSSELL
BRANCH MANAGER
ENGR DIRECTOR Ralph D. Deal
CUSTOMER

DEPARTMENT OF THE NAVY
NAVAL FACILITIES ENGINEERING COMMAND
PWD PORTSMOUTH

NAVAL FACILITIES ENGINEERING COMMAND – MID ATLANTIC
NORFOLK NAVAL SHIPYARD – PORTSMOUTH, VIRGINIA

NORFOLK NAVAL SHIPYARD
PORTSMOUTH, VIRGINIA

B260 EXTENSIVE REPAIRS

MECHANICAL EQUIPMENT SCHEDULES

SCALE: AS NOTED
EPROJECT NO.: 1146716
CONSTR. CONTR. NO.
N40085-15-R-0018
NAVFAC DRAWING NO.
12682052
SHEET 98 OF 118

M-601

DRAWFORM REVISION: 10 MARCH 2009

FILE NAME: P:\VA\VN57\Buildings\0260\2011_1146716_Nuclear Materials Wrse Repairs\B_Design\Drawings\BLDG260-1146716-M-001 - 603.dwg LAYOUT NAME: M-601 PLOTTED: Tuesday, March 17, 2015 - 9:12am USER: JoyAshley

UNIT HEATER SCHEDULE

TAG	FAN					STEAM HEATING					REMARKS
	TYPE	MINIMUM AIRFLOW (CFM)	MOTOR			EAT (°F)	LAT (°F)	MINIMUM HEATING CAPACITY (BTU/HR)	CONDENSATE (LB/HR)	HEAT THROW OR SPREAD (FT)	
			HP	VOLTS/ PHASE	RPM						
UH-1	DIRECT DRIVE	1120	1/10	120/1	1550	20	98.3	31200	34	29	HORIZONTAL AIR DELIVERY
UH-2	DIRECT DRIVE	2500	1/4	120/1	1075	20	111.8	83900	90	34	HORIZONTAL AIR DELIVERY
UH-3	DIRECT DRIVE	1340	1/10	120/1	1550	20	108.8	44700	48	31	HORIZONTAL AIR DELIVERY
UH-4	DIRECT DRIVE	2500	1/4	120/1	1075	20	111.8	84700	91	34	HORIZONTAL AIR DELIVERY
UH-5	DIRECT DRIVE	1340	1/10	120/1	1550	20	108.8	44700	48	31	HORIZONTAL AIR DELIVERY
UH-6	DIRECT DRIVE	2500	1/4	120/1	1075	20	111.8	84700	91	34	HORIZONTAL AIR DELIVERY
UH-7	DIRECT DRIVE	1340	1/10	120/1	1550	20	108.8	40600	44	31	HORIZONTAL AIR DELIVERY
UH-8	DIRECT DRIVE	2500	1/4	120/1	1075	20	111.8	84700	91	34	HORIZONTAL AIR DELIVERY
UH-9	DIRECT DRIVE	730	1/15	120/1	1550	20	110.3	24000	26	25	HORIZONTAL AIR DELIVERY
UH-10	DIRECT DRIVE	2500	1/4	120/1	1075	20	111.8	84700	91	34	HORIZONTAL AIR DELIVERY
UH-11	DIRECT DRIVE	1120	1/10	120/1	1550	20	98.3	37500	41	29	HORIZONTAL AIR DELIVERY
UH-12	DIRECT DRIVE	2500	1/4	120/1	1075	20	111.8	84700	91	34	HORIZONTAL AIR DELIVERY
UH-13	DIRECT DRIVE	1340	1/10	120/1	1550	20	108.8	46600	50	31	HORIZONTAL AIR DELIVERY
UH-14	DIRECT DRIVE	1775	1/8	120/1	1075	20	114.8	84700	91	33	HORIZONTAL AIR DELIVERY
UH-15	DIRECT DRIVE	1340	1/10	120/1	1550	20	108.8	46700	51	31	HORIZONTAL AIR DELIVERY
UH-16	DIRECT DRIVE	2500	1/4	120/1	1075	20	111.8	84700	91	34	HORIZONTAL AIR DELIVERY
UH-17	DIRECT DRIVE	730	1/15	120/1	1550	20	110.3	22100	24	25	HORIZONTAL AIR DELIVERY
UH-18	DIRECT DRIVE	2500	1/4	120/1	1075	20	111.8	100500	108	34	HORIZONTAL AIR DELIVERY
UH-19	DIRECT DRIVE	630	1/15	120/1	1550	20	93.7	17000	19	20	HORIZONTAL AIR DELIVERY
UH-20	DIRECT DRIVE	1340	1/10	120/1	1550	20	108.8	42900	46	31	HORIZONTAL AIR DELIVERY
UH-21	DIRECT DRIVE	2500	1/4	120/1	1075	20	111.8	82500	89	34	HORIZONTAL AIR DELIVERY
UH-22	DIRECT DRIVE	2500	1/4	120/1	1075	20	111.8	83300	90	34	HORIZONTAL AIR DELIVERY
UH-23	DIRECT DRIVE	1550	1/8	120/1	1075	20	117.8	53200	57	32	HORIZONTAL AIR DELIVERY
UH-24	DIRECT DRIVE	2500	1/4	120/1	1075	20	111.8	83300	90	34	HORIZONTAL AIR DELIVERY
UH-25	DIRECT DRIVE	1340	1/10	120/1	1550	20	108.8	42600	46	31	HORIZONTAL AIR DELIVERY
UH-26	DIRECT DRIVE	2500	1/4	120/1	1075	20	111.8	83300	90	34	HORIZONTAL AIR DELIVERY
UH-27	DIRECT DRIVE	1340	1/10	120/1	1550	20	108.8	42600	46	31	HORIZONTAL AIR DELIVERY
UH-28	DIRECT DRIVE	2500	1/4	120/1	1075	20	111.8	83300	90	34	HORIZONTAL AIR DELIVERY
UH-29	DIRECT DRIVE	1340	1/10	120/1	1550	20	108.8	42600	46	31	HORIZONTAL AIR DELIVERY
UH-30	DIRECT DRIVE	2500	1/4	120/1	1075	20	111.8	83300	90	34	HORIZONTAL AIR DELIVERY
UH-31	DIRECT DRIVE	1340	1/10	120/1	1550	20	108.8	42600	46	31	HORIZONTAL AIR DELIVERY
UH-32	DIRECT DRIVE	2500	1/4	120/1	1075	20	111.8	83300	90	34	HORIZONTAL AIR DELIVERY
UH-33	DIRECT DRIVE	1340	1/10	120/1	1550	20	108.8	42600	46	31	HORIZONTAL AIR DELIVERY
UH-34	DIRECT DRIVE	2500	1/4	120/1	1075	20	111.8	83300	90	34	HORIZONTAL AIR DELIVERY
UH-35	DIRECT DRIVE	1340	1/10	120/1	1550	20	108.8	42600	46	31	HORIZONTAL AIR DELIVERY
UH-36	DIRECT DRIVE	2500	1/4	120/1	1075	20	111.8	83300	90	34	HORIZONTAL AIR DELIVERY
UH-37	DIRECT DRIVE	1340	1/10	120/1	1550	20	108.8	52600	57	31	HORIZONTAL AIR DELIVERY
UH-38	DIRECT DRIVE	2500	1/4	120/1	1075	20	111.8	99100	107	34	HORIZONTAL AIR DELIVERY
UH-39	DIRECT DRIVE	5130	1/2	120/1	1100	20	111.8	199650	214	46	HORIZONTAL AIR DELIVERY
UH-40	DIRECT DRIVE	5130	1/2	120/1	1100	20	111.8	199650	214	46	HORIZONTAL AIR DELIVERY

NOTES:
1. PROVIDE DIFFUSER AS REQUIRED BY MANUFACTURER FOR EFFECTIVE AIR DISTRIBUTION TO THE SPACE.

LOUVER SCHEDULE

TAG	AIRFLOW (CFM)	PANEL SIZE (WxHxD)	FREE AREA	USE	MATERIAL	FRAME	REMARKS
L-1	3840	54"x42"x4"	40%	WAREHOUSE OA	ALUMINUM	FLANGED	SEE NOTES 1, 2, 5, AND 7
L-2	170	12"x12"x4"	25%	BREAK AREA OA	ALUMINUM	FLANGED	SEE NOTES 1, 2, AND 7
L-3	100/150	14"x12"	50%	DOOR AIR INTAKE	WOOD	FLANGED	SEE NOTES 3 AND 4
L-4	–	72"x36"x5"	40%	ATTIC VENT	ALUMINUM	FLANGED	SEE NOTES 1, 2, AND 7
L-5	250	18"x12"x4"	28%	ELEC/PUMP RM VENT	ALUMINUM	FLANGED	SEE NOTES 1, 2, AND 7
L-6	4000	48"x30"x4"	40%	WELD RM OA	ALUMINUM	FLANGED	SEE NOTES 1, 2, 6, AND 7
L-7	350	18"x12"x4"	28%	OFFICE/LOCKER OA	ALUMINUM	FLANGED	SEE NOTES 1, 2, AND 7
L-8	350	18"x12"x4"	28%	LOCKER EXH	ALUMINUM	FLANGED	SEE NOTES 1, 2, AND 7
L-9	570	18"x18"x4"	31%	RESTROOM EXH	ALUMINUM	FLANGED	SEE NOTES 1, 2, AND 7
L-10	80	12"x12"x4"	25%	CLEAN ROOM OA	ALUMINUM	FLANGED	SEE NOTES 1, 2, AND 7
L-11	200	12"x18"x2"	28%	FIRE PUMP VENT	ALUMINUM	FLANGED	SEE NOTE 8

NOTES:
1. PROVIDE INSECT SCREEN.
2. LOUVER SHALL BE ABLE TO RESIST WATER PENETRATION OF 0.01 OZ./SQ. FT. WHEN AIR VELOCITY IS 1250 FPM OR LESS.
3. LOUVER DEPTH SHALL BE BASED UPON DOOR THICKNESS.
4. PROVIDE NON-VISION TYPE LOUVER.
5. PROVIDE MOTORIZED DAMPER INTERLOCKED WITH OPERATION OF WAREHOUSE ATTIC VENTILATION FANS EF-5.
6. PROVIDE MOTORIZED DAMPER INTERLOCKED WITH OPERATION OF WELDING AREA EXHAUST FAN EF-2.
7. CAULK, SEAL, AND MAKE WEATHERTIGHT. PROVIDE PREPARED OPENINGS W/ STEEL FRAMING (SEE ARCHITECTURAL AND STRUCTURAL DRAWINGS).
8. PROVIDE FIRE DAMPER AS REQUIRED.

STEAM CONVECTOR SCHEDULE

TAG	MINIMUM CAPACITY (BTU/HR)	CONDENSATE (LB/HR)	LENGTH (IN)	HEIGHT (IN)	COIL DEPTH (IN)	REMARKS
C-1	15758	17	44	38	6	WALL MOUNTED, RECESSED
C-2	12941	14	38	38	6	WALL MOUNTED, RECESSED
C-3	14247	16	38	38	6	WALL MOUNTED, RECESSED
C-4	18059	20	50	38	6	WALL MOUNTED, RECESSED
C-5	6607	7	26	38	6	WALL MOUNTED, RECESSED
C-6	9910	11	44	36	4	WALL MOUNTED, RECESSED
C-7	15383	17	44	38	6	WALL MOUNTED, RECESSED
C-8	7340	8	26	38	6	WALL MOUNTED, RECESSED

NOTES:
1. CAPACITIES BASED ON 25 PSIG ENTERING STEAM PRESSURE AND 65°F ENTERING AIR TEMPERATURE.

DIFFUSER, REGISTER, AND GRILLE SCHEDULE

TAG	TYPE	NECK SIZE (IN.)	AIR FLOW (CFM)	USE	COLOR	THROW (FT.)	PD (IN. WG)	NOISE CRITERION (NC)	REMARKS
S-1	24"x24" LAY-IN T-BAR CEILING SUPPLY DIFFUSER	8	200/240/260	SUPPLY	WHITE	5.3/6.4/6.8	0.02/0.028/0.033	<20	FOUR WAY FIXED AIR PATTERN
S-2		10	350	SUPPLY	WHITE	9.2	0.035	<20	FOUR WAY FIXED AIR PATTERN
R-1	24"x24" LAY-IN T-BAR CEILING RETURN GRILLE	14	520	RETURN	WHITE	–	0.034	–	REMOVABLE FACE PERFORATED
R-2		18	830/880			–	0.044/0.049	–	
E-1	24"x24" LAY-IN T-BAR CEILING EXHAUST GRILLE	6	100	EXHAUST	WHITE	–	0.019	–	REMOVABLE FACE PERFORATED
E-2		8	150/170			–	0.020/0.025	–	
E-3		12	350			–	0.027	–	

NOTES:
1. DIFFUSER, REGISTERS, AND GRILLES SHALL BE OF STEEL CONSTRUCTION.

APPR | DATE | DESCRIPTION | SYM

NAVFAC

SEAL

A/E INFO

APPROVED
FOR RALPH DEAL 3/25/15
FOR COMMANDER NAVFAC

ACTIVITY
SATISFACTORY TO DATE 3-25-15

DES	JMA	DRW	JMA	CHK	LDH

<<PM/DM>> R. M. RUSSELL
BRANCH MANAGER
ENGR DIRECTOR Ralph D. Deal
CUSTOMER

DEPARTMENT OF THE NAVY
NAVAL FACILITIES ENGINEERING COMMAND
PWD PORTSMOUTH
NAVAL FACILITIES ENGINEERING COMMAND ~ MID ATLANTIC
NORFOLK NAVAL SHIPYARD ~ PORTSMOUTH, VIRGINIA
NORFOLK NAVAL SHIPYARD
PORTSMOUTH, VIRGINIA
B260 EXTENSIVE REPAIRS
MECHANICAL EQUIPMENT SCHEDULES

SCALE: AS NOTED
EPROJECT NO.: 1146716
CONSTR. CONTR. NO. N40085-15-R-0018
NAVFAC DRAWING NO. 12682053
SHEET 99 OF 118

M-602

DRAWFORM REVISION: 10 MARCH 2009

FILE NAME: P:\VA\NNSY\Buildings\0260\2011_1146716_Nuclear Materials Wing Repairs\B_Design\Drawings\B0260-1146716-M-001 - 603.dwg LAYOUT NAME: M-602 PLOTTED: Tuesday, March 17, 2015 - 9:13am USER: JoyAshley

DIRECT DIGITAL CONTROL POINTS SCHEDULE

REFERENCE NUMBER ⟨X⟩	POINT DESCRIPTION	DIGITAL OUTPUT					ANALOG OUTPUT						DIGITAL INPUT					ANALOG INPUT							
		START/STOP	OPEN/CLOSE	OTHER	ALARM		POSITION CONTROL	SPEED CONTROL	CONTROL POINT ADJUST	OTHER	ALARM		STATUS	OTHER	ALARM			TEMPERATURE	PRESSURE	FLOW	SPEED	VOLUME	OTHER	ALARM	
1	WAREHOUSE HEATING ZONE TEMPERATURE (QTY OF 8)																	●							
2	WAREHOUSE UNIT HEATER FAN POWER (QTY OF 38 HEATERS ON 8 ZONES)	●																							
3	WELDING AREA HEATING ZONE TEMPERATURE																	●							
4	WELDING AREA UNIT HEATER FAN POWER (UH-39 AND UH-40)	●																							
5	FIRE PUMP ROOM HEATING ZONE TEMPERATURE																	●							
6	FIRE PUMP ROOM CONVECTOR STEAM VALVE (C-1)		●																						
7	ELECTRICAL ROOM HEATING ZONE TEMPERATURE																	●							
8	ELECTRICAL ROOM CONVECTOR STEAM VALVE (C-2)		●																						
9	LOCKER ROOM HEATING ZONE TEMPERATURE																	●							
10	LOCKER ROOM CONVECTOR STEAM VALVE (C-3) QTY OF 2		●																						
11	OFFICE HEATING ZONE TEMPERATURE																	●							
12	OFFICE CONVECTOR STEAM VALVE (C-4) QTY OF 2		●																						
13	BREAK ROOM HEATING ZONE TEMPERATURE																	●							
14	BREAK ROOM CONVECTOR STEAM VALVE (C-8) QTY OF 2		●																						

REFERENCE NUMBER ⟨X⟩	POINT DESCRIPTION	DIGITAL OUTPUT					ANALOG OUTPUT						DIGITAL INPUT					ANALOG INPUT							
		START/STOP	OPEN/CLOSE	OTHER	ALARM		POSITION CONTROL	SPEED CONTROL	CONTROL POINT ADJUST	OTHER	ALARM		STATUS	OTHER	ALARM			TEMPERATURE	PRESSURE	FLOW	SPEED	VOLUME	OTHER	ALARM	
15	WOMENS RESTROOM HEATING ZONE TEMPERATURE																	●							
16	WOMENS RESTROOM CONVECTOR STEAM VALVE (C-6)		●																						
17	MENS RESTROOM HEATING ZONE TEMPERATURE																	●							
18	MENS RESTROOM CONVECTOR STEAM VALVE (C-6)		●																						
19	JANITORS CLOSET HEATING ZONE TEMPERATURE																	●							
20	JANITORS CLOSET CONVECTOR STEAM VALVE (C-5)		●																						
21	CLEAN AREA HEATING ZONE TEMPERATURE																	●							
22	CLEAN AREA CONVECTOR STEAM VALVE (C-7) QTY OF 3		●																						
23	STEAM SERVICE HIGH PRESSURE SENSOR																		●						
24	STEAM SERVICE LOW PRESSURE SENSOR																		●						
25	STEAM SERVICE VALVE		●																						
26	OFFICE COOLING ZONE TEMPERATURE																	●							
27	OFFICE COOLING ACTUATION (AHU-1 AND CU-1)	●																							
28	OFFICE/LOCKER ROOM AHU FAN OPERATION (AHU-1)													●											

REFERENCE NUMBER ⟨X⟩	POINT DESCRIPTION	DIGITAL OUTPUT					ANALOG OUTPUT						DIGITAL INPUT					ANALOG INPUT							
		START/STOP	OPEN/CLOSE	OTHER	ALARM		POSITION CONTROL	SPEED CONTROL	CONTROL POINT ADJUST	OTHER	ALARM		STATUS	OTHER	ALARM			TEMPERATURE	PRESSURE	FLOW	SPEED	VOLUME	OTHER	ALARM	
29	BREAK ROOM COOLING ZONE TEMPERATURE																	●							
30	BREAK ROOM COOLING ACTUATION (AHU-2 AND CU-2)	●																							
31	BREAK ROOM AHU FAN OPERATION (AHU-2)													●											
32	CLEAN AREA COOLING ZONE TEMPERATURE																	●							
33	CLEAN AREA COOLING ACTUATION (AHU-3 AND CU-3)	●																							
34	CLEAN AREA AHU FAN OPERATION (AHU-3)													●											
35	ELECTRICAL ROOM EXHAUST FAN OPERATION (EF-1)													●											
36	BREAK ROOM/RESTROOMS/ JANITOR CLOSET EXHAUST FAN OPERATION (EF-3)													●											
37	OFFICE/LOCKER ROOM EXHAUST FAN OPERATION (EF-4)													●											
38	WAREHOUSE CENTER BAY EXHAUST FAN OPERATION (EF-5) QTY OF 6													●											
39	WAREHOUSE CENTER BAY EXHAUST FAN CONTROL (EF-5) QTY OF 6	●																							
40	OUTSIDE AIR TEMPERATURE SENSOR																							●	

APPR	DATE	DESCRIPTION	SYM

SEAL

A/E INFO

APPROVED
Chris Beach 3/23/15
FOR RALPH DEAL
FOR COMMANDER NAVFAC

ACTIVITY
SATISFACTORY TO DATE 3-23-15

DES	JMA	DRW	JMA	CHK	LDH

<<PM/DM>> R. M. RUSSELL
BRANCH MANAGER
ENGR DIRECTOR Ralph D. Deal
CUSTOMER

DEPARTMENT OF THE NAVY
NAVAL FACILITIES ENGINEERING COMMAND
PWD PORTSMOUTH

NAVAL FACILITIES ENGINEERING COMMAND ~ MID ATLANTIC
NORFOLK NAVAL SHIPYARD ~ PORTSMOUTH, VIRGINIA

NORFOLK NAVAL SHIPYARD
PORTSMOUTH, VIRGINIA

B260 EXTENSIVE REPAIRS

MECHANICAL CONTROLS SCHEDULE

SCALE: AS NOTED
EPROJECT NO.: 1146716
CONSTR. CONTR. NO. N40085-15-R-0018
NAVFAC DRAWING NO. 12682054
SHEET 100 OF 118

M-603

DRAWFORM REVISION: 10 MARCH 2009

FILE NAME: P:\VA\NNSY\Buildings\0260\2011_1146716_Nuclear Materials Whse Repairs\B_Design\Drawings\BJ0260-1146716-M-001 - 603.dwg LAYOUT NAME: M-603 PLOTTED: Tuesday, March 17, 2015 - 9:14am USER: JoyAshley

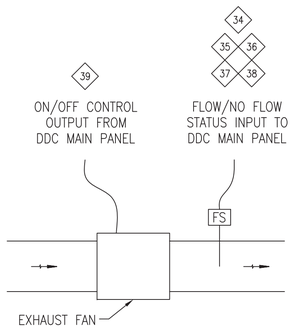

EXHAUST FAN CONTROL DIAGRAM (EF-1, EF-3 THROUGH EF-5)

SCALE: NTS

SCHEDULE OF OPERATION (EF-1, EF-3 THROUGH EF-5):

EXHAUST FANS SHALL OPERATE CONTINUOUSLY FOR BUILDING VENTILATION. OPERATION SHALL BE MONITORED FOR A FLOW OR NO FLOW AIRFLOW STATUS CONDITION BY THE BUILDING DDC SYSTEM. THE DDC SYSTEM SHALL INITIATE AN ALARM CONDITION AT THE DDC MAIN PANEL WHEN A NO FLOW AIRFLOW STATUS CONDITION IS RECOGNIZED BY THE BUILDING DDC SYSTEM. THE DDC SYSTEM SHALL PROVIDE FOR ON/OFF CONTROL OF EXHAUST FANS.

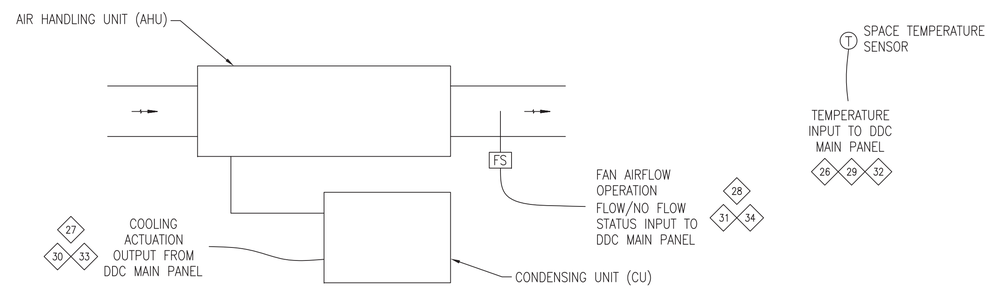

AIR CONDITIONER CONTROL DIAGRAM (AHU-1/CU-1 THROUGH AHU-3/CU-3)

SCALE: NTS

SCHEDULE OF OPERATION (AHU-1/CU-1 THROUGH AHU-3/CU-3):

COOLING OPERATION SHALL BE CONTROLLED BY THE BUILDING DDC SYSTEM. SPACE TEMPERATURE SHALL BE MONITORED BY A SPACE TEMPERATURE SENSOR COMMUNICATING AN ANALOG SIGNAL TO THE BUILDING DDC SYSTEM.

WHEN THE SPACE TEMPERATURE RISES ABOVE THE COOLING SETPOINT TEMPERATURE AS RECOGNIZED BY THE BUILDING DDC SYSTEM, THE BUILDING DDC SYSTEM SHALL ACTIVATE COOLING OPERATION OF THE AIR CONDITIONING SYSTEM. WHEN THE SPACE TEMPERATURE DROPS BELOW THE COOLING SETPOINT TEMPERATURE AS RECOGNIZED BY THE BUILDING DDC SYSTEM THE BUILDING DDC SYSTEM SHALL DEACTIVATE COOLING OPERATION OF THE AIR CONDITIONING SYSTEM.

THE INDOOR AHU FAN SHALL OPERATE CONTINUOUSLY FOR BUILDING VENTILATION. SYSTEM COOLING OPERATION SHALL CYCLE WITH THE SPACE SETPOINT TEMPERATURE.

COOLIING SETPOINT TEMPERATURES SHALL BE SET BY NAVFAC AND PROGRAMMED INTO THE DDC SYSTEM.

SYM	DESCRIPTION	DATE	APPR

NAVFAC

SEAL

A/E INFO

APPROVED
FOR RALPH DEAL 2/23/15
FOR COMMANDER NAVFAC

ACTIVITY
SATISFACTORY TO DATE 3-25-15

DES: JMA | DRW: JMA | CHK: LDH
<<CPM/CMO>>: R. M. RUSSELL
BRANCH MANAGER
ENGR DIRECTOR: Ralph D. Deal
CUSTOMER

DEPARTMENT OF THE NAVY
NAVAL FACILITIES ENGINEERING COMMAND
PWD PORTSMOUTH
NAVAL FACILITIES ENGINEERING COMMAND ~ MID ATLANTIC
NORFOLK NAVAL SHIPYARD ~ PORTSMOUTH, VIRGINIA
NORFOLK NAVAL SHIPYARD
PORTSMOUTH, VIRGINIA

B260 EXTENSIVE REPAIRS

MECHANICAL CONTROLS DIAGRAMS

SCALE: AS NOTED
EPROJECT NO.: 1146716
CONSTR. CONTR. NO. N40085-15-R-0018
NAVFAC DRAWING NO. 12682055
SHEET 101 OF 118

M-604

DRAWFORM REVISION: 10 MARCH 2009

FILE NAME: P:\VA\VNSY\Buildings\b260\2011_1146716_Nuclear Materials Wipe Repairs\B_Design\Drawings\BLDG260-1146716-M-001 - 603.dwg LAYOUT NAME: M-604 PLOTTED: Tuesday, March 17, 2015 - 9:14am USER: Joy.Ashley

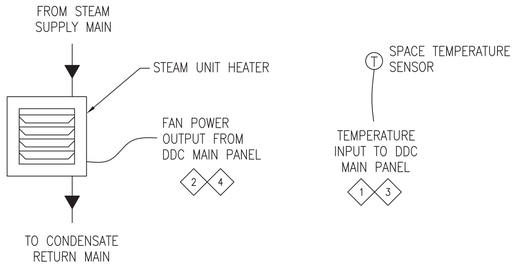

STEAM UNIT HEATER CONTROL DIAGRAM (UH-1 THROUGH UH-40)

SCALE: NTS

SCHEDULE OF OPERATION (UH-1 THROUGH UH-40):

STEAM UNIT HEATER OPERATION SHALL BE CONTROLLED BY THE BUILDING DDC SYSTEM. SPACE TEMPERATURE SHALL BE MONITORED BY A SPACE TEMPERATURE SENSOR COMMUNICATING AN ANALOG SIGNAL TO THE BUILDING DDC SYSTEM.

WHEN THE SPACE TEMPERATURE DROPS BELOW THE HEATING SETPOINT TEMPERATURE AS RECOGNIZED BY THE BUILDING DDC SYSTEM, THE BUILDING DDC SYSTEM SHALL ACTIVATE UNIT HEATER FAN OPERATION. WHEN THE SPACE TEMPERATURE RISES ABOVE THE HEATING SETPOINT TEMPERATURE AS RECOGNIZED BY THE BUILDING DDC SYSTEM, THE BUILDING DDC SYSTEM SHALL DEACTIVATE UNIT HEATER FAN OPERATION.

CONTINUOUS REDUCED PRESSURE STEAM SERVICE OF 25 PSIG SHALL BE PROVIDED TO THE UNIT HEATER WHEN THE OUTSIDE AIR TEMPERATURE IS 60° F OR BELOW. STEAM SERVICE TO THE UNIT HEATER IS CONTROLLED AT THE STEAM PRESSURE REDUCING STATION.

HEATING SETPOINT TEMPERATURES SHALL BE SET BY NAVFAC AND PROGRAMMED INTO THE DDC SYSTEM.

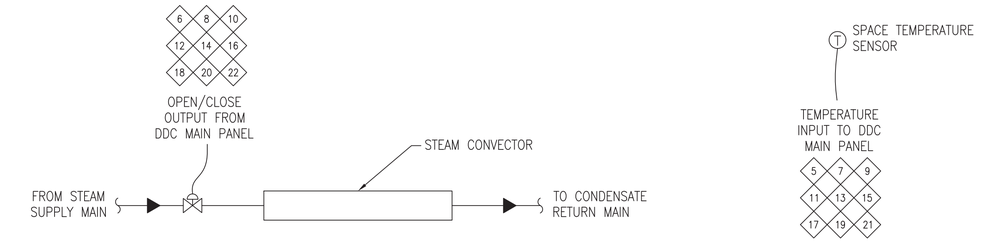

STEAM CONVECTOR CONTROL DIAGRAM (C-1 THROUGH C-8)

SCALE: NTS

SCHEDULE OF OPERATION (C-1 THROUGH C-8):

STEAM CONVECTOR OPERATION SHALL BE CONTROLLED BY THE BUILDING DDC SYSTEM. SPACE TEMPERATURE SHALL BE MONITORED BY A SPACE TEMPERATURE SENSOR COMMUNICATING AN ANALOG SIGNAL TO THE BUILDING DDC SYSTEM.

WHEN THE SPACE TEMPERATURE DROPS BELOW THE HEATING SETPOINT TEMPERATURE AS RECOGNIZED BY THE BUILDING DDC SYSTEM, THE BUILDING DDC SYSTEM SHALL ACTIVATE HEATING OPERATION BY PROVIDING STEAM TO THE STEAM CONVECTOR BY OPENING THE STEAM CONVECTOR CONTROL VALVE. WHEN THE SPACE TEMPERATURE RISES ABOVE THE HEATING SETPOINT TEMPERATURE AS RECOGNIZED BY THE BUILDING DDC SYSTEM, THE BUILDING DDC SYSTEM SHALL DEACTIVATE HEATING OPERATION OF THE STEAM CONVECTOR BY CLOSING THE STEAM CONTROL VALVE.

HEATING SETPOINT TEMPERATURES SHALL BE SET BY NAVFAC AND PROGRAMMED INTO THE DDC SYSTEM.

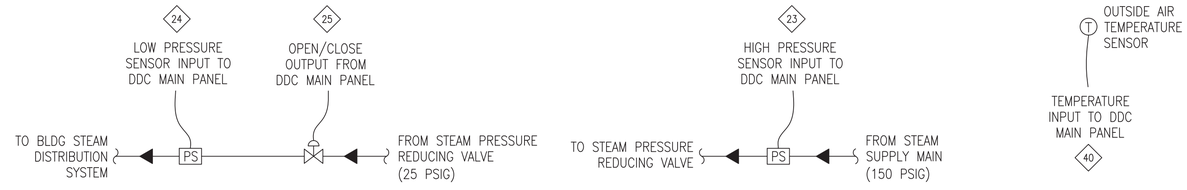

STEAM SERVICE CONTROL DIAGRAM (STEAM PRESSURE REDUCING STATION)

SCALE: NTS

SCHEDULE OF OPERATION (STEAM SERVICE):

STEAM SERVICE TO THE BUILDING STEAM DISTRIBUTION SYSTEM SHALL BE CONTROLLED BY THE BUILDING DDC SYSTEM. THE DDC SYSTEM SHALL ACTUATE THE ELECTRONICALLY CONTROLLED STEAM SERVICE CONTROL VALVE THAT CONTROLS STEAM SERVICE TO THE BUILDING DISTRIBUTION SYSTEM BASED UPON THE OUTSIDE AIR TEMPERATURE AS RECOGNIZED BY THE DDC SYSTEM. THE STEAM SERVICE CONTROL VALVE SHALL BE LOCATED AT THE STEAM PRESSURE REDUCING STATION AS SHOWN ON SHEET M-502.

THE DDC SYSTEM SHALL OPEN THE STEAM SERVICE CONTROL VALVE TO PROVIDE STEAM SERVICE TO THE BUILDING WHEN THE OUTSIDE AIR TEMPERATURE IS AT OR BELOW 70° F, AND CLOSE THE STEAM SERVICE CONTROL VALVE WHEN THE TEMPERATURE RISES ABOVE 70° F.

STEAM SERVICE PRESSURE TO THE BUILDING AND REDUCED STEAM SYSTEM PRESSURE SHALL BE MONITORED BY THE BUILDING DDC SYSTEM. THE DDC SYSTEM SHALL INITIATE AN ALARM CONDITION AT THE DDC MAIN PANEL WHEN A PRESSURE ALARM CONDITION IS RECOGNIZED.

PRESSURE ALARM CONDITIONS

LOW PRESSURE ALARM CONDITION: STEAM SERVICE PRESSURE DROPS BELOW 150 PSIG, OR THE REDUCED STEAM SYSTEM PRESSURE DROPS BELOW 25 PSIG.

HIGH PRESSURE ALARM CONDITION: STEAM SERVICE PRESSURE RISES ABOVE 150 PSIG, OR THE REDUCED STEAM SYSTEM PRESSURE RISES ABOVE 25 PSIG.

NO.	DESCRIPTION	DATE	APPR

NAVFAC

SEAL

A/E INFO

APPROVED
FOR RALPH DEAL 3/23/15
FOR COMMANDER NAVFAC

ACTIVITY
SATISFACTORY TO DATE 3-23-15

DES JMA | DRW JMA | CHK LDH

<<PM/DM>> R. M. RUSSELL

BRANCH MANAGER

ENGR DIRECTOR Ralph D. Deal

CUSTOMER

DEPARTMENT OF THE NAVY
NAVAL FACILITIES ENGINEERING COMMAND
PWD PORTSMOUTH

NAVAL FACILITIES ENGINEERING COMMAND – MID ATLANTIC
NORFOLK NAVAL SHIPYARD – PORTSMOUTH, VIRGINIA

NORFOLK NAVAL SHIPYARD
PORTSMOUTH, VIRGINIA

B260 EXTENSIVE REPAIRS

MECHANICAL CONTROLS DIAGRAMS

SCALE: AS NOTED

EPROJECT NO.: 1146716

CONSTR. CONTR. NO.
N40085-15-R-0018

NAVFAC DRAWING NO.
12682056

SHEET 102 OF 118

M-605

DRAWFORM REVISION: 10 MARCH 2009

FILE NAME: P:\VA\VNSY\Buildings\0260\2011_1146716_Nuclear Materials Wtse Repairs\B_Design\Drawings\BLDG260-1146716-M-001 - 603.dwg LAYOUT NAME: M-605 PLOTTED: Tuesday, March 17, 2015 - 9:15am USER: JoyAshley

SYMBOLS LEGEND

GENERAL

1. GENERAL NOTE TAG – REFER TO "GENERAL NOTES THIS SHEET" FOR EACH SHEET

◇1 SPECIAL NOTE TAG – REFER TO "SPECIAL NOTES" ON THIS SHEET.

①1 DEMOLITION NOTE TAG – REFER TO "DEMOLITION KEYNOTES" FOR EACH SHEET

[1] NEW WORK NOTE TAG – REFER TO "NEW WORK KEYNOTES" FOR EACH SHEET

(1) EXISTING FEEDER TAG – REFER TO "FEEDER SCHEDULE"

◇1 NEW FEEDER TAG – REFER TO "FEEDER SCHEDULE"

(NB 2-6) SUBSTATION CIRCUIT NUMBER

△A LIGHTING FIXTURE TYPE. SEE LIGHTING FIXTURE SCHEDULE.

LIGHTING

FLUORESCENT LIGHTING FIXTURE.

FLUORESCENT EMERGENCY AND /OR NIGHT LIGHTING FIXTURE.

INCANDESCENT OR HIGH INTENSITY DISCHARGE (HID) LIGHTING FIXTURE UON.

RECESSED DOWNLIGHT FIXTURE. COMPACT FLUORESCENT

WALL-MOUNTED LIGHTING FIXTURE.

EXIT LIGHTING FIXTURE, CEILING-MOUNTED. ARROW, WHEN USED, INDICATES DIRECTION.

EMERGENCY, BATTERY POWERED LIGHTING FIXTURE.

S S_3 TOGGLE SWITCH, SINGLE POLE, SUBSCRIPT (3) = 3 WAY, (4) = 4 WAY, (D) DENOTES DIMMER SWITCH 600 WATTS, (a) OR (b) WHEN USED DENOTES FIXTURES CONTROLLED, UON

OCCUPANCY SENSOR, CEILING MOUNTED UON.

POWER

ELECTRICAL PANELBOARD (480V).

ELECTRICAL PANELBOARD (120/208V).

J J_o JUNCTION BOX. o = MODULAR FURNITURE OBI CONNECTIONS (2" X 4")

(5) MOTOR CONNECTION, HP AS INDICATED.

3P 30/20 DISCONNECT SWITCH. IN NEMA 3R ENCL. UON. 3P = # OF POLES, 30 = SWITCH RATING 20 = FUSE RATING (NF INDICATES NON-FUSIBLE).

DUPLEX CONVENIENCE RECEPTACLE. 15A., 125V. MOUNT 18" AFF UON. GFI = GROUND FAULT PROTECTION.

QUADRUPLEX CONVENIENCE RECEPTACLE. 15A., 125V. MOUNT 18" AFF UON. IG = ISOLATED GROUND.

SINGLE RECEPTACLE. 20A., 240V, NEMA 6-20R CONFIGURATION. MOUNT 18" AFF UON.

DRYER RECEPTACLE. 30A., 2P, 125/250V (NEMA XX-30R). MOUNT 18" AFF UON.

(E) EQUIPMENT CONNECTION AS NOTED.

S_M MOTOR RATED SWITCH OR MANUAL MOTOR STARTER WITH OVERLOADS.

COMBINATION MOTOR STARTER/DISCONNECT SWITCH

A-1,2,3 HOMERUN TO PANEL. PANEL & CIRCUIT DESIGNATIONS AS INDICATED.

DR BRANCH CIRCUIT OR FEEDER WIRING IN CONDUIT. NO TICK MARKS INDICATE (1) PHASE CONDUCTOR, (1) NEUTRAL CONDUCTOR & (1) GROUNDING CONDUCTOR IN 3/4" CONDUIT UON. TICK MARKS, WHEN SHOWN, INDICATE NUMBER OF CONDUCTORS IF OTHER THAN THREE; THE LONGER TICK MARK INDICATES GROUND. THE CONDUCTOR SIZE WILL BE AS INDICATED.

INDICATES A CONDUIT RUN CONCEALED IN CEILING, WALL, FLOOR, OR ABOVE SUSPENDED CEILING UON.

T DRY TYPE TRANSFORMER.

CB ENCLOSED CIRCUIT BREAKER.

ABBREVIATIONS

1/C	ONE CONDUCTOR
AFF	ABOVE FINISHED FLOOR
AFG	ABOVE FINISHED GRADE
ARCI	ARC-FAULT CIRCUIT INTERRUPTER
ARF	ABOVE RAISED FLOOR
BKR	BREAKER
C	CONDUIT
CB	CIRCUIT BREAKER
CKT	CIRCUIT
DWG	DRAWING
EA	EACH
EC	EMPTY CONDUIT
ELEC	ELECTRICAL
EMT	ELECTRICAL METALLIC TUBING
ENCL	ENCLOSURE
EQUIP	EQUIPMENT
EWC	ELECTRIC WATER COOLER
EWH	ELECTRIC WATER HEATER
EXIST	EXISTING
EXP	EXPLOSION PROOF EQUIPMENT
FCU	FAN COIL UNIT
FT	FEET
GFCI	GOVERNMENT FURNISHED CONTRACTOR INSTALLED
GFE	GOVERNMENT FURNISHED EQUIPMENT
GFGI	GOVERNMENT FURNISHED GOVERNMENT INSTALLED
GFI	GROUND FAULT INTERRUPTER
GND	GROUND
HGT	HEIGHT
HH	HANDHOLE
HID	HIGH INTENSITY DISCHARGE
HUB	COMPUTER DISTRIBUTION HUB
LTS	LIGHTS
MCB	MAIN CIRCUIT BREAKER
MDP	MAIN DISTRIBUTION PANEL
MECH	MECHANICAL
MH	MANHOLE
MLO	MAIN LUGS ONLY
MTD	MOUNTED
MTG HT	MOUNTING HEIGHT
NEC	NATIONAL ELECTRICAL CODE
NIC	NOT IN CONTRACT
NL	NIGHT LIGHT
NTS	NOT TO SCALE
OBI	OUTLET BASE INFEED
PNL	PANEL
PNLBD	PANELBOARD
PVC	POLYVINYL CHLORIDE CONDUIT
QU	QUANTITY
REC	RECEPTACLE
REQ' D	REQUIRED
RGS	RIGID GALVANIZED STEEL
RM	ROOM
SHT	SHEET
SUB	SUBSTATION
T	TELEPHONE
TYP	TYPICAL
UG	UNDERGROUND
UON	UNLESS OTHERWISE NOTED
W	WIRE
WP	WEATHERPROOF
WW	WIREWAY (TROUGH)
X	IN SCHEDULES, ITEM NOT APPLICABLE
XFMR	TRANSFORMER

GENERAL DEMOLITION NOTES

1. ALL EQUIPMENT AND CONDUIT SHOWN WITH DASHED LINES, OR IDENTIFIED SPECIFICALLY, SHALL BE DEMOLISHED, UNLESS OTHERWISE NOTED AND/OR REQUIRED FOR FUTURE USE.
2. ALL EXISTING PANELS SHALL BE DEMOLISHED. CONDUIT AND WIRING FEEDING THESE PANELS SHALL BE DEMOLISHED, UON.
3. THE OUTSIDE PULLBOX FEEDING PANELS 1 – 4 AND THE CRANE SHALL BE DEMOLISHED AND THE UG CONDUITS PATCHED AT THE SURFACE WITH CONCRETE.
4. THE EXISTING HIGH BAY LIGHTING SHALL BE REMOVED AND RETAINED TO BE REINSTALLED AS SHOWN ON THE PLAN. ALL CONDUIT AND WIRE FEEDING THE EXISTING HIGH BAY LIGHTING SHALL BE DEMOLISHED FROM THE PANELS TO THE FIXTURES.
5. ALL CONDUIT CONCEALED IN WALLS AND SLABS SHALL BE BLANKED OFF AND ABANDONED IN PLACE. PATCH ALL WALLS AND SLABS AFTER DEMOLITION IS COMPLETE, EXCEPT THE IN SLAB CONDUITS FEEDING PANELS 2 AND 4 SHALL BE REUSED TO FEED NEW PANELS INSTALLED IN THE SAME LOCATION.
6. ALL BOXES DISCONTINUED SHALL BE BLANKED OFF OR REMOVED AND DEVICES REMOVED.
7. EXISTING ELECTRICAL EQUIPMENT NOT INDICATED ON DEMOLITION PLAN SHALL REMAIN CONNECTED FOR CONTINUED USE.
8. CONTRACTOR SHALL RECONNECT ANY EXISTING CIRCUIT (INTERRUPTED BY REMOVAL OF AN EXISTING DEVICE) TO THE REMAINING ELECTRICAL EQUIPMENT LOCATED DOWNSTREAM FROM THE POINT OF INTERRUPTION.

GENERAL SCHEDULE

1. WHEN THE BUILDING IS AVAILABLE, DEMOLISH ELECTRICAL ITEMS AS NEEDED TO PROVIDE ACCESS TO ALL TRADES INVOLVED BUT LEAVE THE EXISTING SERVICE ENERGIZED UNTIL THE NEW SUBSTATION R1 IS IN PLACE.
2. AFTER THE NEW R1 IS IN PLACE, AN OUTAGE MUST BE SCHEDULED TO DEMOLISH THE EXISTING R1 AND THE FEEDER CONDUCTORS TO MDP, THE EXISTING MDP AND ANY OTHER ITEMS REMAINING. THE EXISTING 2300 VOLT SERVICE TO R1 SHALL BE LOCKED OFF, AND THE CONDUCTORS TERMINATED TEMPORARILY IN MH 497.
3. PROVIDE THE NEW 11.5 KV SERVICE TO SS R1, SCHEDULE AN OUTAGE WITH THE NNSY OUTAGE COORDINATOR AND PROVIDE SPLICES IN THE 11.5 KV CIRCUIT (N-05) TO ENERGIZE THE NEW SS R1. THIS OUTAGE WILL AFFECT BUILDING 1460 AND THE EXISTING 2.3KV BUS BREAKER P-12 IN DIST VI.
4. REMOVE THE EXISTING 2.3 KV CONDUCTORS FEEDING THE EXISTING R1 FROM MH 497 BACK TO BREAKER P-4 IN DIST VI.
5. EXISTING FIRE ALARM SYSTEM SHALL REMAIN OPERATIONAL DUE TO CONTINUED OCCUPATION OF BUILDING. CONTRACTOR SHALL COORDINATE WITH GOVERNMENT OFFICIAL AND FIRE DEPARTMENT CONCERNING THE TRANSFER OF FIRE ALARM DEVICES FROM EXISTING FIRE ALARM PANEL TO NEW FIRE ALARM PANEL.
6. CONTRACTOR SHALL NOTIFY OF POWER OUTAGES TO ACTIVITY AND GOVERNMENT OFFICIAL.

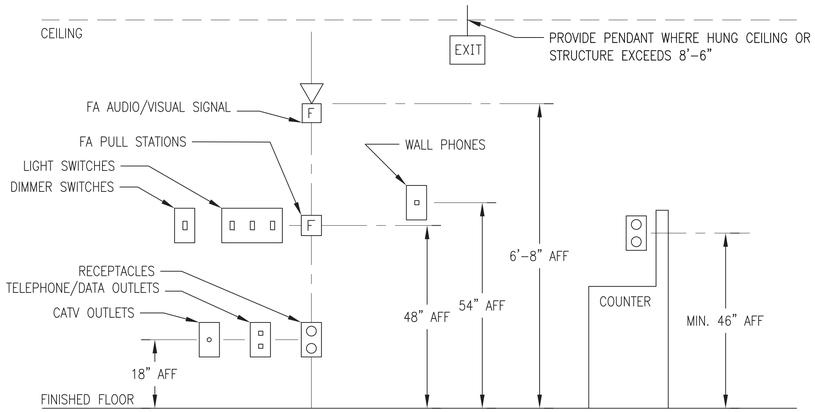

NOTE: INSTALL DEVICES ON ONE COMMON VERTICAL CENTERLINE.

TYPICAL WIRING DEVICE MOUNTING HEIGHT ELEVATION DETAIL

C4 E-001 | E-001

NOT TO SCALE

GENERAL NOTES

1. AN EQUIPMENT GROUND WIRE SHALL BE RUN WITH ALL FEEDERS AND BRANCH CIRCUITS.
2. ALL WIRING SHALL BE COPPER, THWN/THHN, MINIMUM SIZE # 12 AWG, UON. ALL CONDUIT IN THE WAREHOUSE AREA SHALL BE TYPE RMC, GALVANIZED STEEL, MINIMUM SIZE ¾". ALL CONDUIT IN THE OFFICE AREA SHALL BE EMT, MINIMUM SIZE ¾".
3. ALL WIRING IN THE WAREHOUSE AREA FOR THE HIGH BAY REINSTALLED LIGHTING FIXTURES SHALL BE # 10 AWG, COPPER WITH THHN/THWN INSULATION.
4. ELECTRICAL WORK SHALL BE ACCOMPLISHED PER 2014 NATIONAL ELECTRICAL CODE (NEC).
5. ALL ELECTRICAL EQUIPMENT SHALL BE IDENTIFIED AND LABELED. ALL FEEDERS/CIRCUITS SHALL BE IDENTIFIED AT EACH END OF THE WIRE AND AT EVERY SPLICE OR JUNCTION/PULL BOX.
6. PROVIDE NEW TYPED DIRECTORIES FOR ALL PANELS (NEW OR EXISTING) INCLUDED IN THIS PROJECT.
7. DRAWINGS ARE BASED ON EXISTING BUILDING PLANS AND FIELD INVESTIGATIONS. CONTRACTOR SHALL VISIT THE EXISTING BUILDING AND ACQUAINT HIMSELF/HERSELF WITH THE EXISTING FIELD CONDITIONS. CONTRACTOR SHALL EXAMINE ALL DRAWINGS TO AVOID CONFLICT.
8. ALL NEW RECEPTACLES/SWITCHES, CONDUIT AND WIRING SHALL BE RECESSED/CONCEALED IN OFFICE, LOCKER ROOM, BREAK ROOM AND RESTROOMS. IN SHOP AREAS AND IN WAREHOUSE, ALL SWITCHES, RECEPTACLES, LIGHTING FIXTURES AND CONDUIT SHALL BE SURFACE MOUNTED. PROVIDE IDENTIFICATION LABEL ON WALL PLATES WHICH INCLUDES PANEL DESIGNATION AND CIRCUIT #.
9. COORDINATE WITH ARCHITECTURAL, MECHANICAL AND CIVIL DRAWINGS FOR EXACT FIXTURE LOCATIONS.
10. CONTRACTOR SHALL REPAIR/REPLACE BROKEN OR DAMAGED EXISTING EQUIPMENT WITH SAME TYPE AS REQUIRED.
11. BRANCH CIRCUITS CONSIST OF (1) PHASE CONDUCTOR, (1) NEUTRAL AND (1) GROUNDING CONDUCTOR IN 3/4" C, UNLESS OTHERWISE NOTED.
12. PROVIDE NAMEPLATES ON THE EXTERIOR OF ALL ELECTRICAL PANELS AND ENCLOSURES AS FOLLOWS:

DEVICE I.D. DEVICE RATING POWER SOURCE INSTALLATION DATE NAVFAC DRAWING NUMBER	PANEL LP1A 100A, 120/208V-3ø, 4W FEEDS FROM PANEL MDP INSTALLED 1996 DRAWING NO. 15,350

FOR DISCONNECT SWITCHES AND MOTOR STARTERS THE TOP LINE SHALL BE THE NAME/DESIGNATION OF EQUIPMENT BEING FED BY SAME.

APPR | DATE | DESCRIPTION | SYM

NAVFAC

SEAL

A/E INFO

APPROVED
FOR RALPH DEAL 3/23/15
FOR COMMANDER NAVFAC

ACTIVITY
SATISFACTORY TO DATE 3-23-15

DES JWM | DRW JWM | CHK RDM

<<PM/TM/>> R. M. RUSSELL

BRANCH MANAGER

ENGR DIRECTOR Ralph D. Deal

CUSTOMER

DEPARTMENT OF THE NAVY
NAVAL FACILITIES ENGINEERING COMMAND
PWD PORTSMOUTH

NAVAL FACILITIES ENGINEERING COMMAND ~ MID ATLANTIC
NORFOLK NAVAL SHIPYARD ~ PORTSMOUTH, VIRGINIA

NORFOLK NAVAL SHIPYARD
PORTSMOUTH, VIRGINIA

B260 EXTENSIVE REPAIRS

ELECTRICAL LEGEND, ABBREVIATIONS AND NOTES

SCALE: AS NOTED
EPROJECT NO.: 1146716
CONSTR. CONTR. NO. N40085-15-R-0018
NAVFAC DRAWING NO. 12682057
SHEET 103 OF 118

E-001

DRAWFORM REVISION: 10 MARCH 2009

FILE NAME: C:\Users\jerry.meade\Documents\Autocad Dwgs\B 260 Renovation Final\BLDG260-1146716-E-001.dwg LAYOUT NAME: E-001 PLOTTED: Monday, March 30, 2015 - 4:25pm USER: jerry.meade

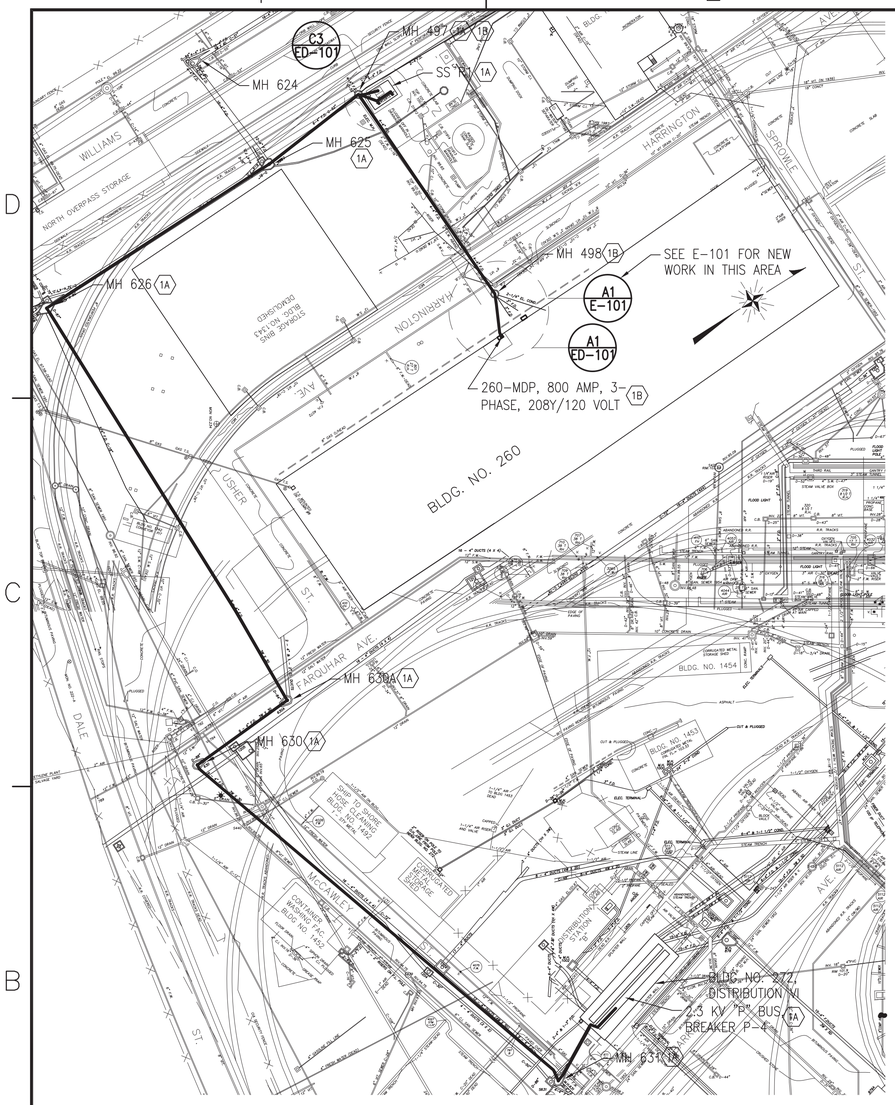

ELECTRICAL SITE DEMOLITION PLAN

SCALE: 1/64" = 1'-0"

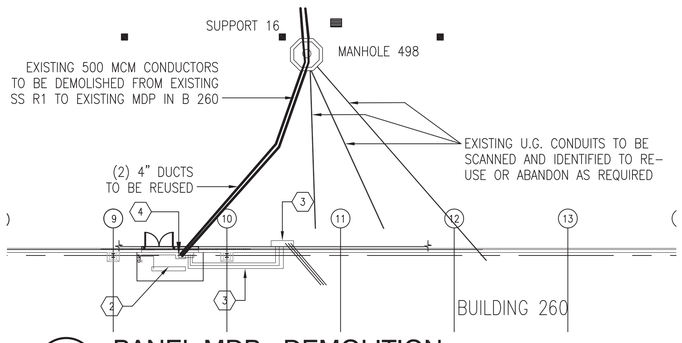

A1 ED-101 **PANEL MDP - DEMOLITION**

SCALE: 1/16" = 1'-0"

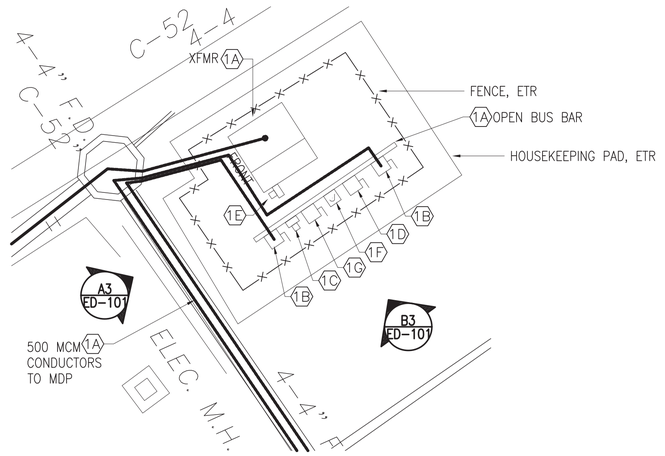

C3 ED-101 **SUBSTATION R1 - DEMOLITION**

SCALE: 1/8" = 1'-0"

B3 ED-101 **SUBSTATION R1 - SOUTHEAST ELEVATION**

SCALE: NONE

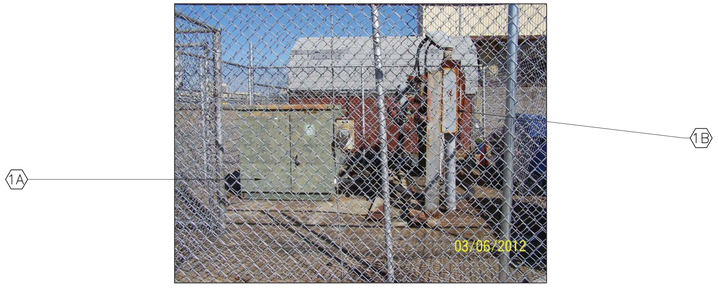

A3 ED-101 **SUBSTATION R1 - SOUTH ELEVATION**

SCALE: NONE

SCHEDULE/OUTAGE NOTES

1. EXISTING SUBSTATION R1 SHALL REMAIN ENERGIZED UNTIL BUILDING 260 IS VACATED.
2. THE EXISTING 3/C 500 MCM 2.3KV CIRCUIT FEEDING R1 SHALL BE REMOVED BACK TO THE P BUS IN DISTRIBUTION VI, APPROXIMATELY 2000 FEET. IF ANY PART OF THE CIRCUIT CANNOT BE REMOVED, CONTRACTOR SHALL ASK THE GOVERNMENT REPRESENTATIVE FOR INSTRUCTIONS.
3. CONTRACTOR MUST PERFORM A MANHOLE SURVEY FROM BUILDING 260 BACK TO MANHOLE 625 TO ENSURE THAT THERE IS AN EXISTING DUCT AVAILABLE SO THAT THE NEW 15 KV CONDUCTORS CAN BE INSTALLED AND SPLICE MADE IN 625 TO EXISTING CIRCUIT N-05. AN OUTAGE WILL BE REQUIRED FOR BUILDING 1460 IN ORDER TO COMPLETE THE SPLICE IN MH 625.

GENERAL NOTES

1. CONTRACTOR SHALL COORDINATE WITH UTILITY PRIOR TO COMMENCING DEMOLITION WORK.
2. ALL EQUIPMENT ASSOCIATED WITH THE EXISTING SUBSTATION R1 IS TO BE DEMOLISHED. THIS INCLUDES TRANSFORMER, SWITCHES (PRIMARY AND SECONDARY), BUS BARS, SUPPORTS, CONDUCTORS, METERS, FIRE ALARM EQUIPMENT AND CONDUIT.
3. THE EXISTING FEEDERS TO BUILDING 260 SHALL BE RE-FED FROM THE THE NEW SUBSTATION R1 SECONDARY SWITCHGEAR.
4. THE FIRE ALARM TEST POINT SHALL BE RELOCATED TO A LOCATION ON THE OUTSIDE OF B 260 NEAR THE EXISTING ELECTRICAL ROOM.
5. ALL WIRING FROM THE SUBSTATION MOUNTING PAD SHALL BE DEMOLISHED BACK TO THE LOAD OR SOURCE. IF THE LOAD OR SOURCE CANNOT BE FOUND, CONTRACTOR SHALL TRACE THE CONDUCTORS FOR THE ENDS OF THE CONDUCTORS. IF CONDUCTORS ARE DEAD AND CANNOT BE REMOVED, THEY SHALL BE TERMINATED IN THE ADJACENT MANHOLE, TAPED AND LABELED"ABANDONED".
6. ALL CONDUITS AT THE SUBSTATION SHALL BE CUT TO FINISHED GRADE AND FILLED WITH CONCRETE.
7. IF ANY CIRCUITS, OR OTHER WIRING IS DISCOVERED IN THE DEMOLITION PROCESS, THE GOVERNMENT REPRESENTATIVE SHALL BE NOTIFIED FOR PROPER PROCEDURE.

(X) DEMO WORK NOTES

1. DEMOLISH ALL SUBSTATION R1(2300V) EQUIPMENT, WHICH INCLUDES:
   A. 200KVA, 2300V-208Y/120V PAD MOUNTED TRANSFORMER AND ASSOCIATED SECONDARY OPEN BUS BAR. REMOVE 2.3KV PRIMARY FEEDER(2 SETS 3/C 500 MCM) FROM SUBSTATION R1 VIA MANHOLES #497,625,626,630A,630 & 631 BACK TO DISTRIBUTION VI, REFER TO SINGLE-LINE DIAGRAM FOR DETAILS. REMOVE SECONDARY FEEDER BACK TO SECONDARY OPEN BUS BAR.
   B. TWO (2) 400A, 3ø, 208V DISCONNECT SWITCHES SERVING BUILDING 260 "MDP". DEMOLISH FEEDER FROM BUILDING 260 "MDP" BACK TO DISCONNECT SWITCHES IN SUBSTATION R1 VIA MANHOLES #497 & 498. DEMOLISH 800 AMP, 208 VOLT, 3 PHASE MAIN BREAKER PANEL MDP. 4" CONDUITS FROM MANHOLE 498 TO BE RE-USED FOR NEW FEEDER FROM NEW SUBSTATION R1.
   C. BUILDING 260 METER.
   D. BUILDING 212 ABANDONED DISCONNECT SWITCH.
   E. METER MOUNTED ON TRANSFORMER.
   F. FIRE-ALARM TEST/SWITCH JUNCTION BOX AND ASSOCIATED FEEDER(6 SETS – #8 DUPLEX).
   G. UNKNOWN DISCONNECT SWITCH.
2. DEMOLISH EXISTING MDP IN ELECTRICAL ROOM. DEMOLISH EXISTING LIGHTING FIXTURE, SINGLE POLE SWITCH, RECEPTACLE, CONDUIT AND WIRE.
3. DEMOLISH CONDUIT AND WIRE FROM MDP BACK TO OUTSIDE PULLBOX FOR CIRCUITS FEEDING:
   A. PANELS 1 AND 2
   B. PANELS 3 AND 4,
   C. CRANE.
4. DEMOLISH CONDUIT AND WIRE FOR CIRCUIT FEEDING STEP-UP TRANSFORMER FOR WELDING OUTLET.
5. DEMOLISH CONDUIT AND WIRE FOR EXHAUST FAN CIRCUIT.

GRAPHIC SCALE

0 4' 8' 16' — SCALE: 1/8" = 1'-0"

0 32' 64' 128' — SCALE: 1/64" = 1'-0"

APPR	DATE	DESCRIPTION	SYM

NAVFAC

SEAL

A/E INFO

APPROVED: for RALPH DEAL 3/23/15
FOR COMMANDER NAVFAC

ACTIVITY
SATISFACTORY TO DATE 3-23-15

DES	JWM	DRW	JWM	CHK	JML

<<PM/DM>> R. M. RUSSELL
BRANCH MANAGER
ENGR DIRECTOR Ralph D. Deal
CUSTOMER

DEPARTMENT OF THE NAVY
NAVAL FACILITIES ENGINEERING COMMAND
PWD PORTSMOUTH

NAVAL FACILITIES ENGINEERING COMMAND ~ MID ATLANTIC
NORFOLK NAVAL SHIPYARD ~ PORTSMOUTH, VIRGINIA

NORFOLK NAVAL SHIPYARD
PORTSMOUTH, VIRGINIA

B260 EXTENSIVE REPAIRS

ELECTRICAL SITE DEMOLITION PLAN

SCALE: AS NOTED
EPROJECT NO.: 1146716
CONSTR. CONTR. NO. N40085-15-R-0018
NAVFAC DRAWING NO. 12682058
SHEET 104 OF 118

ED-101

DRAWFORM REVISION: 10 MARCH 2009

FILE NAME: C:\Users\jerry.meade\Documents\Autocad Dwgs\B 260 Renovation Final\BLDG260-1146716-ED-101.dwg LAYOUT NAME: ED-101 PLOTTED: Monday, March 30, 2015 - 4:29pm USER: jerry.meade

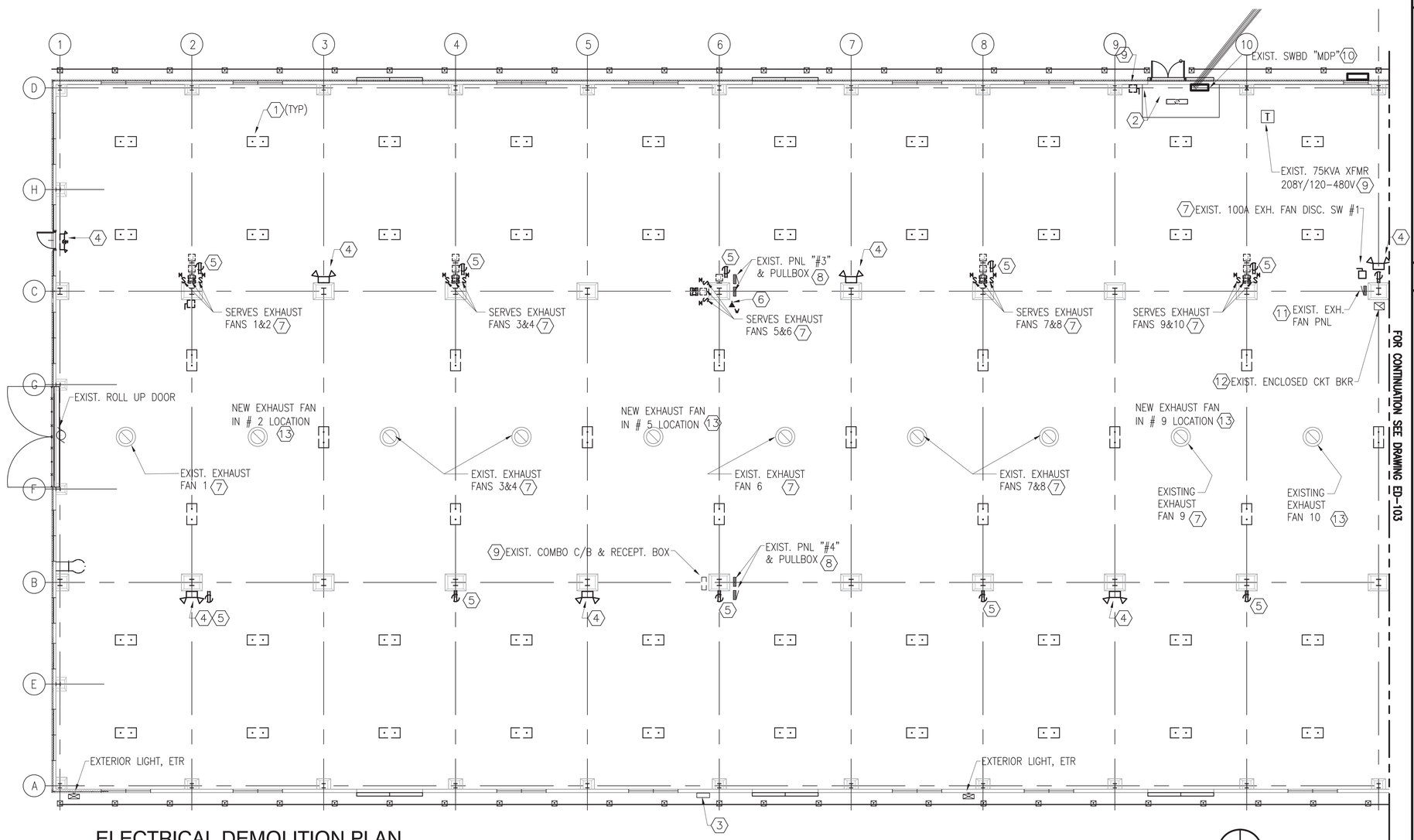

ELECTRICAL DEMOLITION PLAN

SCALE: 3/32" = 1'-0"

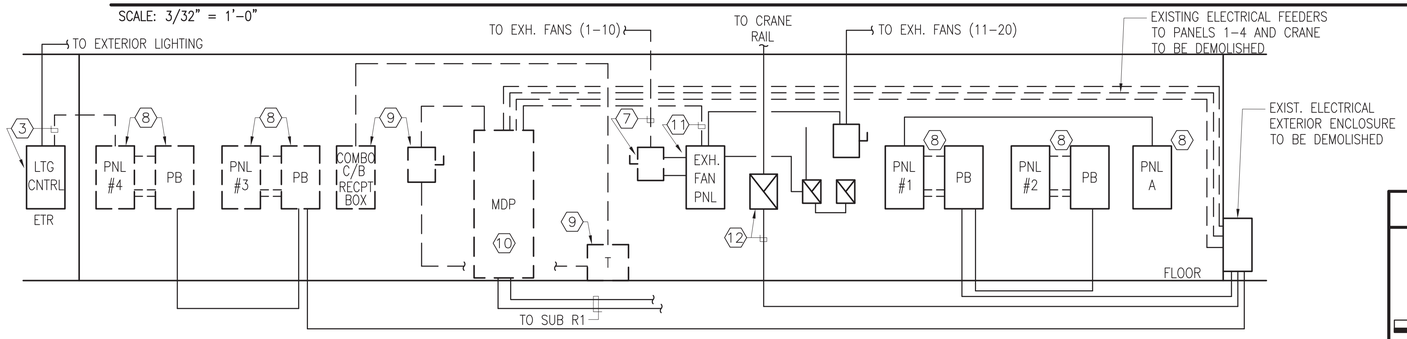

EXISTING RISER DIAGRAM - DEMOLITION

SCALE: NONE

PLAN NORTH

KEY PLAN

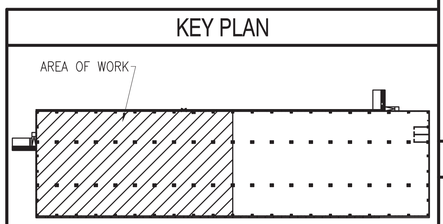

GENERAL NOTES

1. CONTRACTOR SHALL FIELD VERIFY PANELBOARD DESIGNATION AND CIRCUIT NUMBER OF ALL DEVICES, EQUIPMENT, LIGHTING CIRCUITS TO BE REMOVED PRIOR TO COMMENCING DEMOLITION WORK. ALL CONDUIT TO BE REMOVED THAT IS ROUTED IN FLOOR SLAB SHALL BE ABANDONED IN SLAB AND CUT BACK TO FLOOR LEVEL AND FILLED WITH CONCRETE, EXCEPT IN-SLAB CONDUITS TO EXISTING PANELS 2 AND 4 SHALL BE REUSED TO FEED NEW PANELS.
2. CONTRACTOR SHALL PROVIDE TEMPORARY POWER TO ALL DEVICES, EQUIPMENT(S), LIGHTING OUTSIDE SCOPE OF WORK AFFECTED BY DEMOLITION. REFER TO PANEL SCHEDULES FOR DETAILS.

(X) DEMO WORK NOTES

1. CONTRACTOR SHALL CAREFULLY DISCONNECT, REMOVE AND RETAIN EXISTING 2'X4', 6 LAMP PENDANT MOUNTED FLUORESCENT LIGHTING FIXTURE WITH WIRE GUARD AND ALL ASSOCIATED HANGERS FOR REUSE. REMOVE ALL ASSOCIATED CONDUIT AND CONDUCTORS BACK TO SOURCE.
2. DISCONNECT AND REMOVE 1'X4', 2 LAMP SURFACE MOUNTED LIGHTING FIXTURE AND ASSOCIATED LIGHT SWITCH, CONDUIT AND CONDUCTORS BACK TO "MDP".
3. DISCONNECT LIGHTING CONTROLLER. REMOVE CONTROLLER FEEDER BACK TO EXISTING PANEL "#4". CONTRACTOR SHALL RETAIN CONTROLLER IN PLACE FOR REUSE, TO BE REFED FROM NEW PANEL. CONTROLLER PROVIDES POWER TO EXTERIOR SITE LIGHTING AND EXTERIOR BUILDING MOUNTED LIGHTING. CONTRACTOR SHALL PROVIDE TEMPORARY POWER TO CONTROLLER DURING DEMOLITION PHASE OF PROJECT.
4. DEMOLISH WALL MOUNTED EMERGENCY BATTERY PACK LIGHT AND COMBINATION EXIT/UNIT. REMOVE ALL ASSOCIATED CONDUIT AND CONDUCTORS BACK TO SOURCE.
5. DISCONNECT AND REMOVE EXISTING SURFACE MOUNTED RECEPTACLES AND ALL ASSOCIATED CONDUIT AND CONDUCTORS BACK TO SOURCE. THE IN-SLAB CONDUITS FOR THE COLUMN MOUNTED RECEPTACLES SHALL REMAIN FOR RE-USE. DEMOLISH ALL RECEPTACLE BOXES AND WIRE BACK TO THE PANEL.
6. DISCONNECT AND REMOVE EXISTING COMMUNICATION DEVICE WHICH INCLUDES DATA, TELEPHONE, PA SYSTEM, ETC. REMOVE CONDUIT AND CONDUCTORS BACK TO SOURCE.
7. DEMOLISH EXHAUST FANS(1 THRU 9) ON ROOFTOP. REMOVE ALL ASSOCIATED 12"x12" JUNCTION BOXES(TYP. OF 2 PER COLUMN), MOTOR RATED TOGGLE SWITCHES, 15A ENCLOSED CIRCUIT BREAKER, CONDUIT AND CONDUCTORS BACK TO EXHAUST FAN DISCONNECT SWITCH #1, EXCEPT LEAVE # 10 FOR FUTURE USE, FED FROM A NEW PANEL.
8. DISCONNECT AND REMOVE PANEL AND ASSOCIATED PULL BOX. REMOVE ALL ASSOCIATED CONDUIT AND CONDUCTORS BACK TO EXISTING "MDP". REMOVE (4) RECEPTACLES MOUNTED UNDER EXISTING PANEL #4. THE IN-SLAB CONDUIT BETWEEN PANELS 3 AND 4 WILL BE RE-USED TO PROVIDE FEED FOR NEW PANEL.
9. DISCONNECT AND REMOVE FLOOR MOUNTED TRANSFORMER, DISCONNECT SWITCH AND COMBO C/B & RECEPTACLE BOX. REMOVE ALL ASSOCIATED CONDUIT AND CONDUCTORS BACK TO SOURCE. CONTRACTOR SHALL TURN OVER EQUIPMENT TO SHOP "99" THRU BUILDING CUSTODIAN.
10. DISCONNECT AND REMOVE EXISTING 800A, 3ø, 208V SWITCHBOARD "MDP". REMOVE ALL ASSOCIATED FEEDER(S) BACK TO SUBSTATION R1, REFER TO DRAWING ED-101 FOR DETAILS. RETAIN UNDERGROUND CONDUIT(S) IN PLACE FOR REUSE.
11. DEMOLISH EXHAUST FAN PANEL, ITS FEEDER AND BRANCH CIRCUITS. EXHAUST FANS 10 AND 11 ARE TO REMAIN, FED FROM A NEW PANEL.
12. DISCONNECT AND RETAIN 400A, 3ø, 208V ENCLOSED CIRCUIT BREAKER SERVING OVERHEAD CRANE IN PLACE FOR REUSE. DEMOLISH THE EXISTING CRANE FEEDER AND CONDUIT FROM MDP. THE CRANE BREAKER WILL BE FED FROM A NEW PANEL.
13. EXISTING EXHAUST FANS 10 AND 11 TO REMAIN AS IS FOR CONTINUED USE AFTER RENOVATION. LEAVE EXISTING MOTOR STARTERS AND WIRING TO THE FANS. PROVIDE A NEW FEEDER TO STARTERS FROM A NEW PANEL AS NOTED.

GRAPHIC SCALE

0 5'-4" 10'-8" 21'-4"

SCALE: 3/32" = 1'-0"

APPR	DATE	DESCRIPTION	SYM

NAVFAC

SEAL

A/E INFO

APPROVED
FOR COMMANDER NAVFAC
3/2/15

ACTIVITY
SATISFACTORY TO
DATE 3-23-15

DES	JWM	DRW	JWM	CHK	RDM

<<PM/DM>> R. M. RUSSELL
BRANCH MANAGER
ENGR DIRECTOR Ralph D. Deal
CUSTOMER

DEPARTMENT OF THE NAVY
NAVAL FACILITIES ENGINEERING COMMAND
PWD PORTSMOUTH

NAVAL FACILITIES ENGINEERING COMMAND ~ MID ATLANTIC
NORFOLK NAVAL SHIPYARD ~ PORTSMOUTH, VIRGINIA

NORFOLK NAVAL SHIPYARD
PORTSMOUTH, VIRGINIA

B260 EXTENSIVE REPAIRS

ELECTRICAL DEMOLITION PLAN

SCALE: AS NOTED
EPROJECT NO.: 1146716
CONSTR. CONTR. NO. N40085-15-R-0018
NAVFAC DRAWING NO. 12682059
SHEET 105 OF 118

ED-102

DRAWFORM REVISION: 10 MARCH 2009

FILE NAME: C:\Users\jerry.meade\Documents\Autocad Dwgs\B 260 Renovation Final\BLDG260-1146716-ED-102.dwg LAYOUT NAME: ED-102 PLOTTED: Monday, March 30, 2015 - 4:19pm USER: jerry.meade

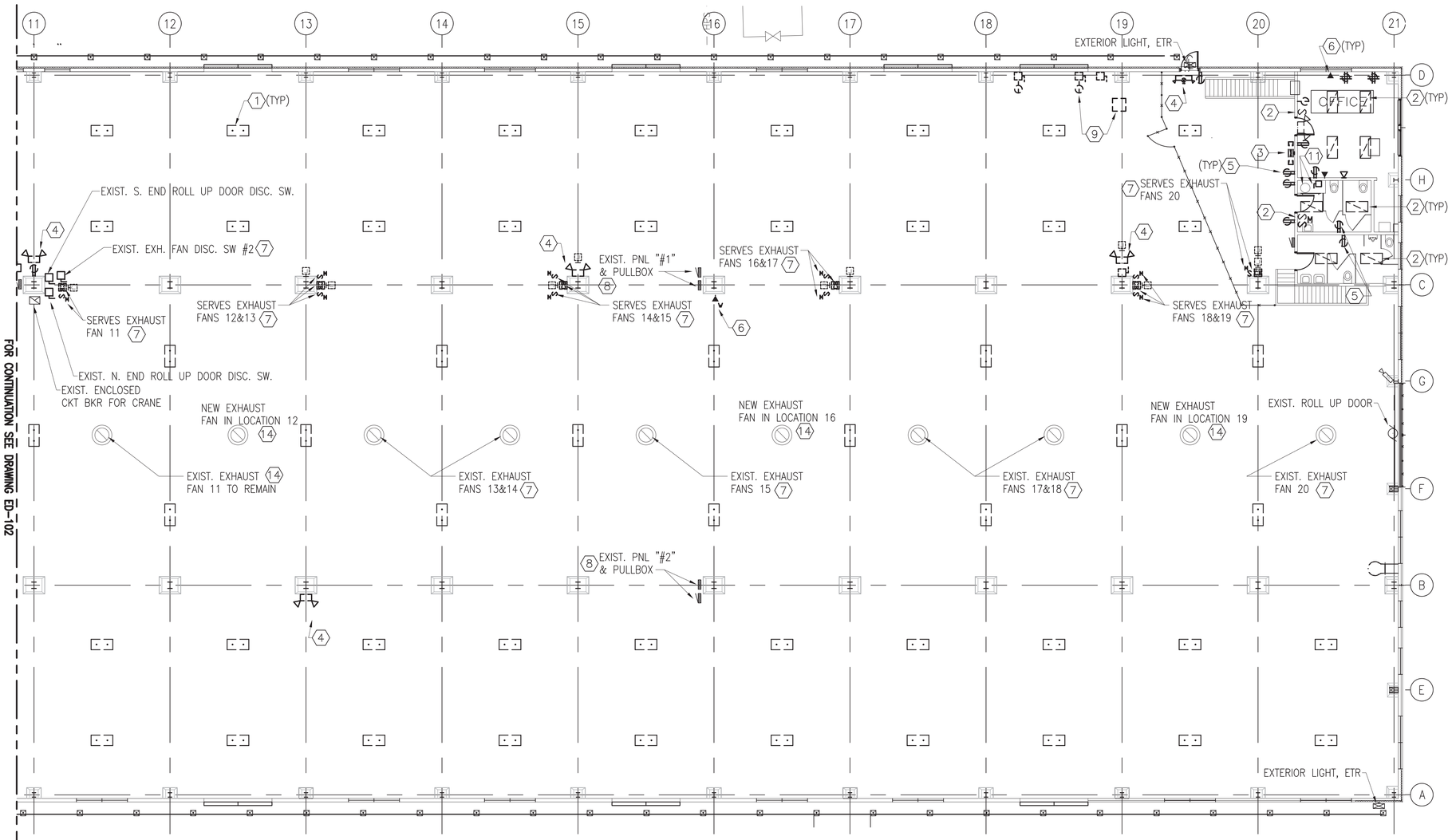

ELECTRICAL DEMOLITION PLAN

SCALE: 3/32" = 1'-0"

PLAN NORTH

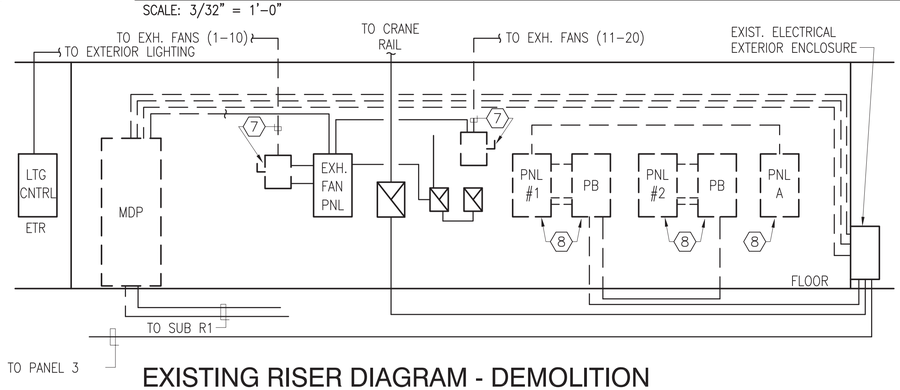

EXISTING RISER DIAGRAM - DEMOLITION

SCALE: NONE

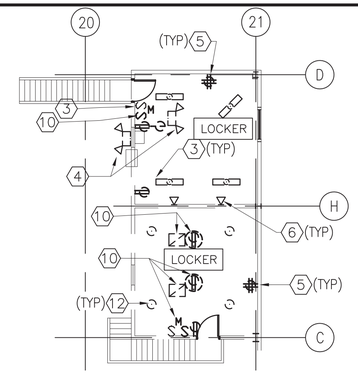

2ND FLOOR DEMOLITION PLAN

SCALE: 3/32" = 1'-0"

PLAN NORTH

KEY PLAN

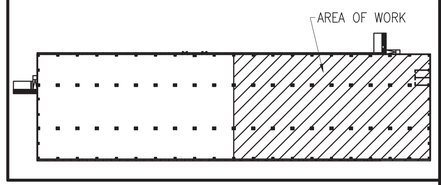

GENERAL NOTES

1. CONTRACTOR SHALL FIELD VERIFY PANELBOARD DESIGNATION AND CIRCUIT NUMBER OF ALL DEVICES, EQUIPMENT, LIGHTING CIRCUITS TO BE REMOVED PRIOR TO COMMENCING DEMOLITION WORK. ALL CONDUIT TO BE REMOVED THAT IS ROUTED IN FLOOR SLAB SHALL BE ABANDONED IN SLAB AND CUT BACK TO FLOOR AND FILLED WITH CONCRETE, EXCEPT CONDUIT TO PANEL # 2, TO BE REUSED FOR NEW PANEL FEEDER.
2. CONTRACTOR SHALL PROVIDE TEMPORARY POWER TO ALL DEVICES, EQUIPMENT(S), LIGHTING OUTSIDE SCOPE OF WORK AFFECTED BY DEMOLITION. REFER TO PANEL SCHEDULES FOR DETAILS.

(X) DEMO WORK NOTES

1. CONTRACTOR SHALL CAREFULLY DISCONNECT, REMOVE AND RETAIN EXISTING 2'X4', 6 LAMP PENDANT MOUNTED FLUORESCENT LIGHTING FIXTURE WITH WIRE GUARD AND ALL ASSOCIATED HANGERS FOR REUSE. REMOVE ALL ASSOCIATED CONDUIT AND CONDUCTORS BACK TO SOURCE.
2. DEMOLISH 2'X4', 2 LAMP, ACRYLIC, RECESSED MOUNTED LIGHTING FIXTURE AND ALL ASSOCIATED LIGHT SWITCH, CONDUIT AND CONDUCTORS BACK TO SOURCE.
3. DEMOLISH 1'X4' AND/OR 2'X4', (2 OR 4) LAMP SURFACE MOUNTED LIGHTING FIXTURE AND ALL ASSOCIATED LIGHT SWITCH, CONDUIT AND CONDUCTORS BACK TO SOURCE.
4. DEMOLISH WALL MOUNTED EMERGENCY BATTERY PACK LIGHT AND COMBINATION EXIT/UNIT. REMOVE ALL ASSOCIATED CONDUIT AND CONDUCTORS BACK TO SOURCE. RETAIN COMBINATION EXIT/UNIT FOR REUSE.
5. DEMOLISH EXISTING SURFACE MOUNTED RECEPTACLES AND ALL ASSOCIATED CONDUIT AND CONDUCTORS BACK TO SOURCE.
6. DEMOLISH EXISTING COMMUNICATION DEVICE WHICH INCLUDES DATA, TELEPHONE, PA SYSTEM, ETC. REMOVE CONDUIT AND CONDUCTORS BACK TO SOURCE.
7. DEMOLISH EXHAUST FANS(12, 13, 14, 15, 17, 18, 20) ON ROOFTOP. REMOVE ALL ASSOCIATED 12"x12" JUNCTION BOXES(TYP. OF 2 PER COLUMN), MOTOR RATED TOGGLE SWITCHES, 15A ENCLOSED CIRCUIT BREAKER, CONDUIT AND CONDUCTORS BACK TO EXHAUST FAN DISCONNECT SWITCH #2, EXCEPT LEAVE # 11 FOR FUTURE USE, FED FROM A NEW PANEL.
8. DEMOLISH PANEL AND ASSOCIATED PULL BOX. REMOVE ALL ASSOCIATED CONDUIT AND CONDUCTORS BACK TO EXISTING "MDP". REMOVE PANEL "A" BACK TO SOURCE.
9. DISCONNECT, REMOVE AND RETAIN FLOOR MOUNTED BATTERY CHARGER AND ASSOCIATED DISCONNECT SWITCH W/ RECEPTACLE MOUNTED BELOW FOR REUSE. REMOVE ALL ASSOCIATED CONDUIT AND CONDUCTORS BACK TO SOURCE.
10. DEMOLISH EXHAUST FAN. REMOVE ALL ASSOCIATED CEILING MOUNTED RECEPTACLE, JUNCTION BOXES, MOTOR TOGGLE SWITCH, CONDUIT AND CONDUCTORS BACK TO SOURCE. DISCONNECT AND REMOVE DISCONNECT SWITCHES. REMOVE CONDUIT AND CONDUCTORS BACK TO SOURCE.
11. DEMOLISH WATER HEATER, DISCONNECT SWITCH, CONDUIT AND CONDUCTORS BACK TO SOURCE.
12. DEMOLISH INCANDESCENT SURFACE MOUNTED LIGHTING FIXTURE AND ALL ASSOCIATED LIGHT SWITCH, CONDUIT AND CONDUCTORS BACK TO SOURCE.
13. EXHAUST FAN 11 TO REMAIN AS IS FOR CONTINUED USE AFTER RENOVATION. LEAVE EXISTING MOTOR STARTERS AND WIRING TO THE FANS. PROVIDE A NEW FEEDER TO THE STARTER FROM A NEW PANEL AS NOTED.

GRAPHIC SCALE

0 5'-4" 10'-8" 21'-4"

SCALE: 3/32" = 1'-0"

APPR	DATE	DESCRIPTION	SYM

NAVFAC

A/E INFO

APPROVED
FOR COMMANDER NAVFAC 3/23/15

ACTIVITY
SATISFACTORY TO DATE 3-23-15

DES JWM DRW JWM CHK RDM

<<PM/DM>> R. M. RUSSELL

BRANCH MANAGER

ENGR DIRECTOR Ralph D. Deal

CUSTOMER

DEPARTMENT OF THE NAVY
NAVAL FACILITIES ENGINEERING COMMAND
PWD PORTSMOUTH

NAVAL FACILITIES ENGINEERING COMMAND ~ MID ATLANTIC
NORFOLK NAVAL SHIPYARD - PORTSMOUTH, VIRGINIA

NORFOLK NAVAL SHIPYARD PORTSMOUTH, VIRGINIA

B260 EXTENSIVE REPAIRS

ELECTRICAL DEMOLITION PLAN

SCALE: AS NOTED
EFPROJECT NO.: 1146716
CONSTR. CONTR. NO.: N40085-15-R-0018
NAVFAC DRAWING NO.: 12682060
SHEET 106 OF 118

ED-103

DRAWFORM REVISION: 10 MARCH 2009

FILE NAME: C:\Users\jerry.meade\Documents\Autocad Dwgs\B 260 Renovation Final\BLDG260-1146716-ED-103.dwg LAYOUT NAME: ED-103 PLOTTED: Friday, March 27, 2015 - 5:44pm USER: jerry.meade

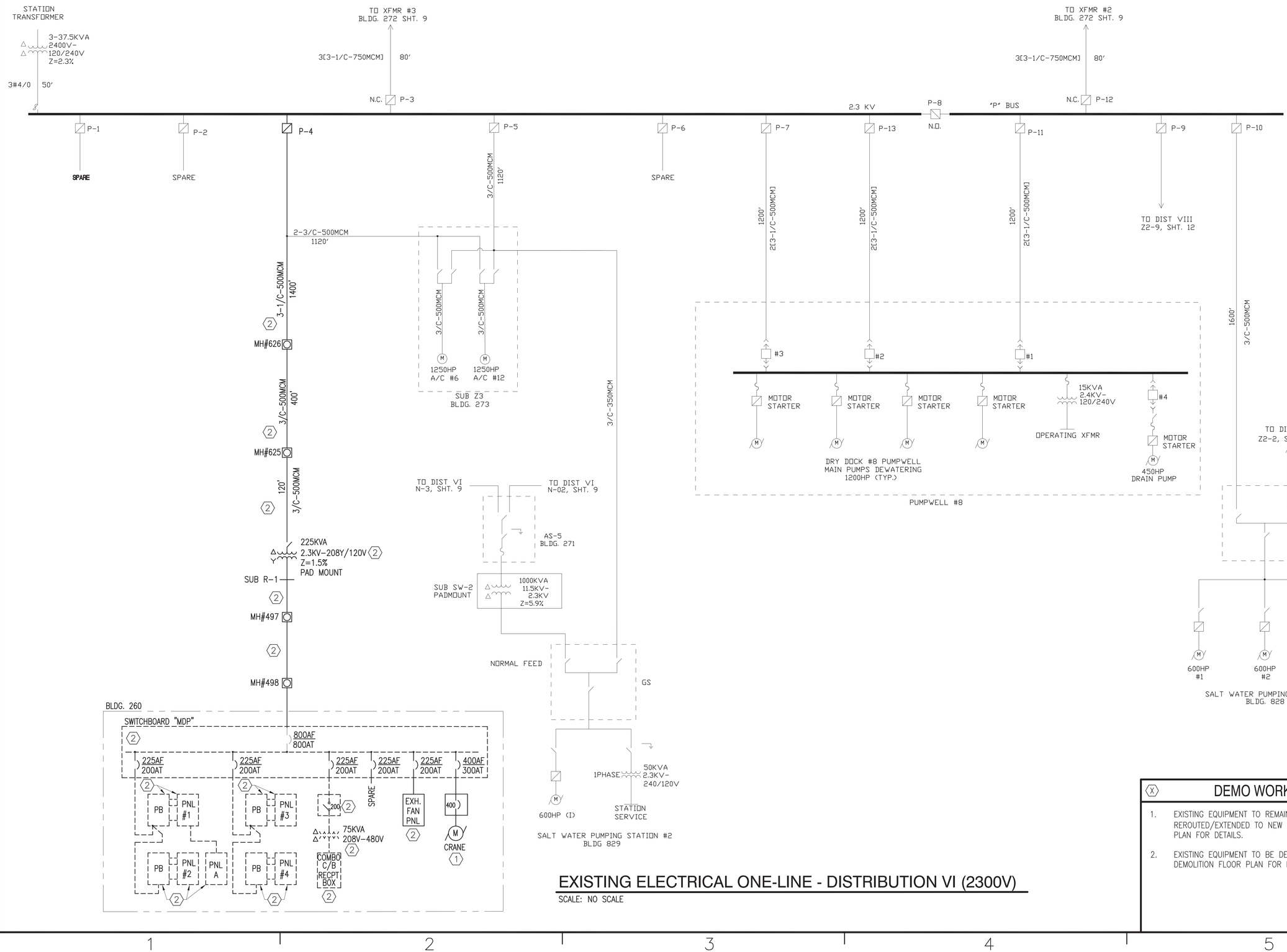

EXISTING ELECTRICAL ONE-LINE - DISTRIBUTION VI (2300V)

SCALE: NO SCALE

DEMO WORK NOTES

1. EXISTING EQUIPMENT TO REMAIN, FEEDER TO BE REROUTED/EXTENDED TO NEW SOURCE, REFER TO NEW WORK PLAN FOR DETAILS.
2. EXISTING EQUIPMENT TO BE DEMOLISHED, REFER TO DEMOLITION FLOOR PLAN FOR DETAILS.

APPR | DATE | DESCRIPTION | SYM

NAVFAC

SEAL

A/E INFO

APPROVED
FOR COMMANDER NAVFAC 3/2/15

ACTIVITY
SATISFACTORY TO DATE 3-23-15

DES JWM DRW JWM CHK JML

<CPM/DM>: R. M. RUSSELL

BRANCH MANAGER

ENGR DIRECTOR Ralph D. Deal

CUSTOMER

DEPARTMENT OF THE NAVY
NAVAL FACILITIES ENGINEERING COMMAND
PWD PORTSMOUTH

NAVAL FACILITIES ENGINEERING COMMAND ~ MID ATLANTIC
NORFOLK NAVAL SHIPYARD - PORTSMOUTH, VIRGINIA

NORFOLK NAVAL SHIPYARD PORTSMOUTH, VIRGINIA

B260 EXTENSIVE REPAIRS

EXISTING ELECTRICAL ONE-LINE - DISTRIBUTION VI (2300V)

SCALE: AS NOTED
EPROJECT NO.: 1146716
CONSTR. CONTR. NO. N40085-15-R-0018
NAVFAC DRAWING NO. 12682061
SHEET 107 OF 118

ED-601

DRAWFORM REVISION: 10 MARCH 2009

FILE NAME: C:\Users\jerry.meade\Documents\Autocad Dwgs\B 260 Renovation Final\BLDG260-1146716-ED-601.dwg LAYOUT NAME: ED-601 PLOTTED: Monday, March 30, 2015 - 4:21pm USER: jerry.meade

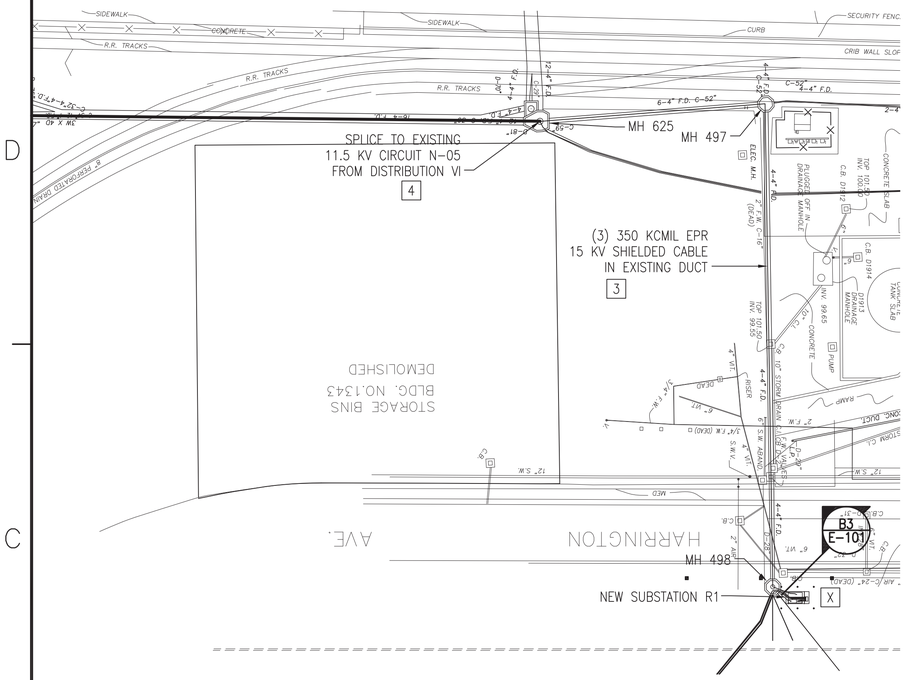

ELECTRICAL NEW WORK SITE PLAN

SCALE: 1/32" = 1'-0"

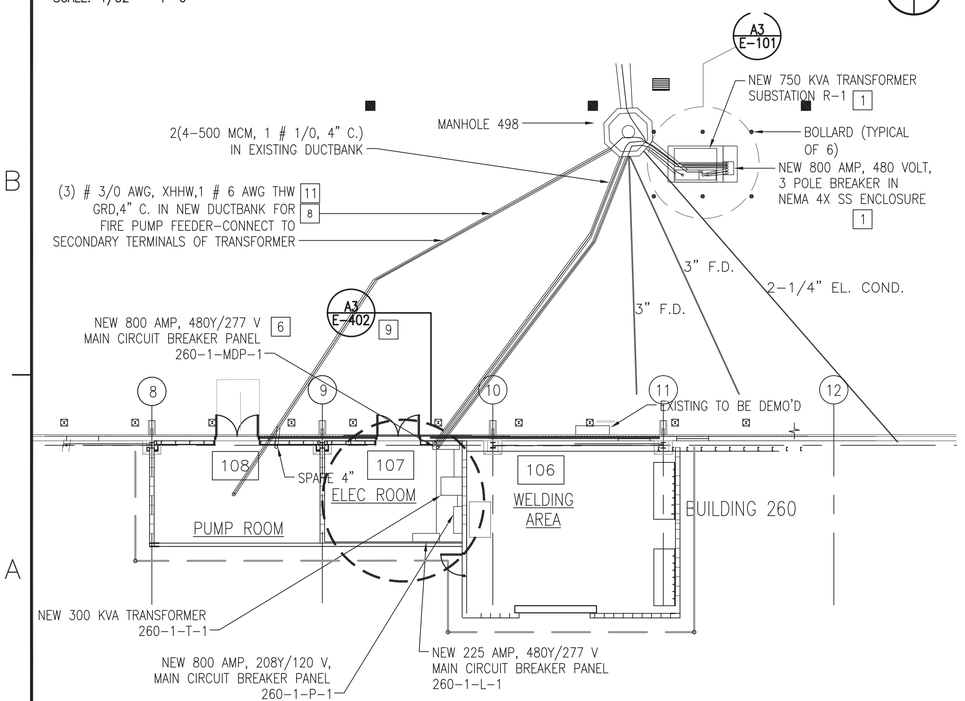

ELECTRICAL NEW SUBSTATION R1 PLAN

SCALE: 3/32" = 1'-0"

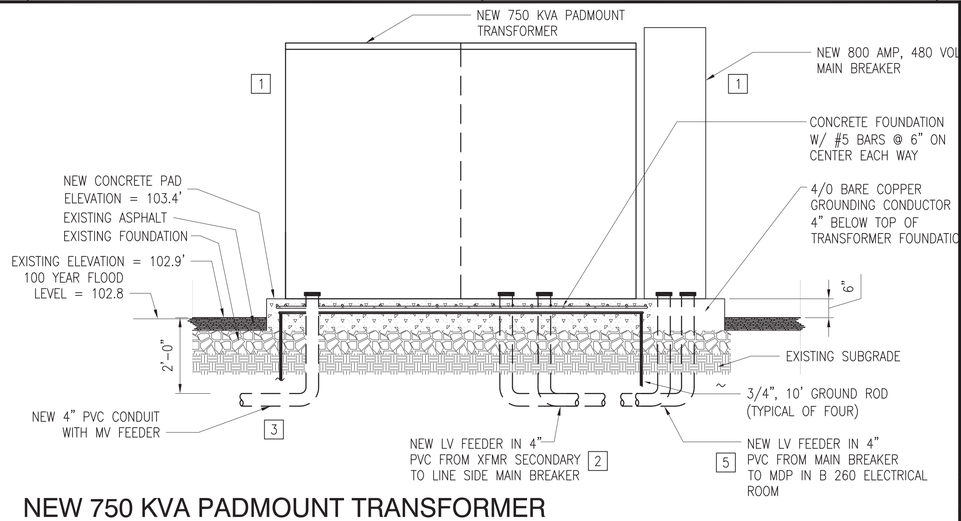

NEW 750 KVA PADMOUNT TRANSFORMER TYPICAL ELEVATION

SCALE: NTS

C2
E-101

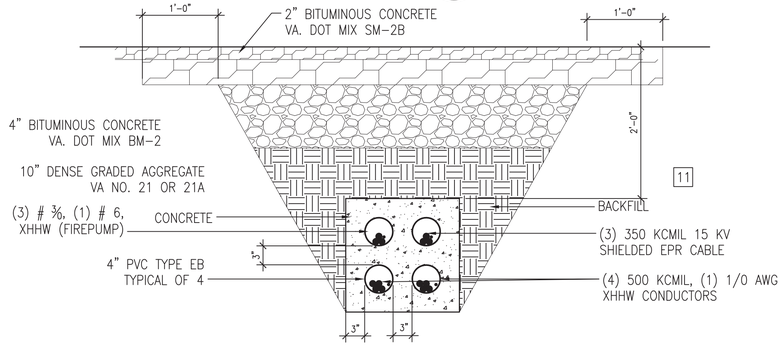

NEW DUCTBANK SECTION

SCALE: NTS

B3
E-101

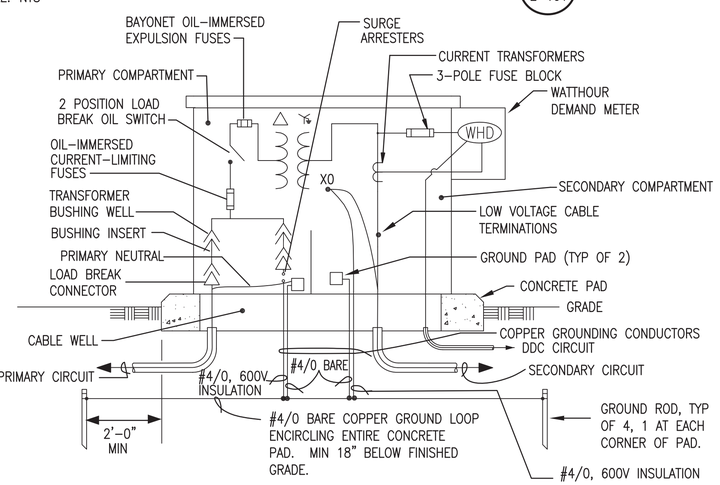

PADMOUNT TRANSFORMER DETAILS

SCALE: NTS

A3
E-101

GENERAL NOTES

1. AN EQUIPMENT GROUNDING CONDUCTOR SHALL BE INSTALLED WITH ALL FEEDERS AND BRANCH CIRCUITS.
2. ALL WIRING SHALL BE COPPER, THWN/THHN, MINIMUM SIZE # 12 AWG, UON. ALL CONDUIT IN THE WAREHOUSE AREA SHALL BE TYPE RMC, GALVANIZED STEEL, MINIMUM SIZE ¾". ALL CONDUIT IN THE OFFICE AREA SHALL BE EMT, MINIMUM SIZE ¾".
3. ELECTRICAL WORK SHALL BE ACCOMPLISHED PER 2014 NATIONAL ELECTRICAL CODE (NEC).
4. PROVIDE NEW TYPED DIRECTORIES FOR ALL PANELS (NEW OR EXISTING) INCLUDED IN THIS PROJECT.
5. DRAWINGS ARE BASED ON EXISTING BUILDING PLANS AND FIELD INVESTIGATIONS. CONTRACTOR SHALL VISIT THE EXISTING BUILDING AND ACQUAINT HIMSELF/HERSELF WITH THE EXISTING FIELD CONDITIONS. CONTRACTOR SHALL EXAMINE ALL DRAWINGS TO AVOID CONFLICT.
6. COORDINATE WITH ARCHITECTURAL, MECHANICAL AND CIVIL DRAWINGS FOR EXACT FIXTURE LOCATIONS.
7. BRANCH CIRCUITS CONSIST OF (1) PHASE CONDUCTOR, (1) NEUTRAL AND (1) GROUNDING CONDUCTOR IN 3/4" C, UNLESS OTHERWISE NOTED.

X NEW WORK NOTES

1. PROVIDE NEW 750 KVA PAD MOUNTED TRANSFORMER AND SECONDARY FEEDER BREAKER.
2. NEW PARALLEL 500 MCM FROM TRANSFORMER SECONDARY CONNECTIONS TO NEW FEEDER BREAKER ON PAD ADJACENT TO TRANSFORMER R1.
3. NEW 350 MCM EPR SHIELDED CABLE.
4. SPLICE TO EXISTING 11.5 KV CIRCUIT N-05 IN MANHOLE 625.
5. NEW PARALLEL 500 MCM FROM SECONDARY BREAKER TO NEW MDP IN 260 ELECT. ROOM.
6. NEW 800 AMP MDP.
7. PROVIDE NEW FIREPUMP FEEDER FROM SECONDARY OF TRANSFORMER TO FIREPUMP CONTROL PANEL.
8. PROVIDE NEW DUCTBANK FOR FIREPUMP FEEDER WITH SAME DIMENSIONS AS DUCTBANK TO TRANSFORMER – ONLY WITH (2) 4" TYPE EB PVC CONDUITS (1 SPARE TO BE STUBBED UP AT OUTSIDE WALL, INSIDE FIRE PUMP ROOM.)
9. SEE SHEET E-402 FOR DETAILS OF THE ELECTRICAL ROOM.
10. PROVIDE PROTECTIVE BOLLARDS AROUND THE NEW SUBSTATION R1 AS SHOWN IN DETAIL.
11. PROVIDE DUCTBANK FROM MANHOLE 498 TO NEW TRANSFORMER AS SHOWN. DUE TO THE CLOSENESS TO THE MANHOLE, IT IS ACCEPTABLE TO FILL THE (4) DUCT DUCTBANK EXCAVATION ENTIRELY WITH CONCRETE. THE (2) DUCT DUCTBANK SHALL ADHERE TO THE DETAILS AS SHOWN.
12. TRANSITION FROM PVC TO RIGID STEEL CONDUIT FROM PVC FOR ALL DUCTS AT 18" BELOW FINISHED GRADE.

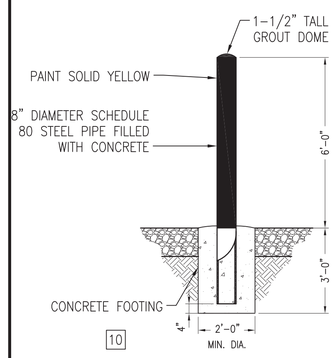

TYPICAL BOLLARD DETAIL

SCALE: NTS

A5
E-101

GRAPHIC SCALE

0 4' 8' 16'
SCALE: 1/32" = 1'-0"

0 32' 64' 128'
SCALE: 3/32" = 1'-0"

APPR | DATE | DESCRIPTION | SYM

NAVFAC

SEAL

A/E INFO

APPROVED
FOR COMMANDER NAVFAC
3/22/15

ACTIVITY
SATISFACTORY TO DATE 3-22-15

DES	JWM	DRW	JWM	CHK	JML

<<PM/DM>> R. M. RUSSELL
BRANCH MANAGER
ENGR DIRECTOR Ralph D. Deal
CUSTOMER

DEPARTMENT OF THE NAVY
NAVAL FACILITIES ENGINEERING COMMAND
PWD PORTSMOUTH

NAVAL FACILITIES ENGINEERING COMMAND – MID ATLANTIC
NORFOLK NAVAL SHIPYARD – PORTSMOUTH, VIRGINIA
NORFOLK NAVAL SHIPYARD
PORTSMOUTH, VIRGINIA

B260 EXTENSIVE REPAIRS

ELECTRICAL SITE NEW WORK

SCALE:	AS NOTED
EPROJECT NO.:	1146716
CONSTR CONTR NO.	N40085-15-R-0018
NAVFAC DRAWING NO.	12682062
SHEET	108 OF 118

E-101

DRAWFORM REVISION: 10 MARCH 2009

FILE NAME: C:\Users\jerry.meade\Documents\Autocad Dwgs\B 260 Renovation Final\BLDG260-1146716-E-101.dwg LAYOUT NAME: E-101 PLOTTED: Monday, March 30, 2015 - 4:20pm USER: jerry.meade

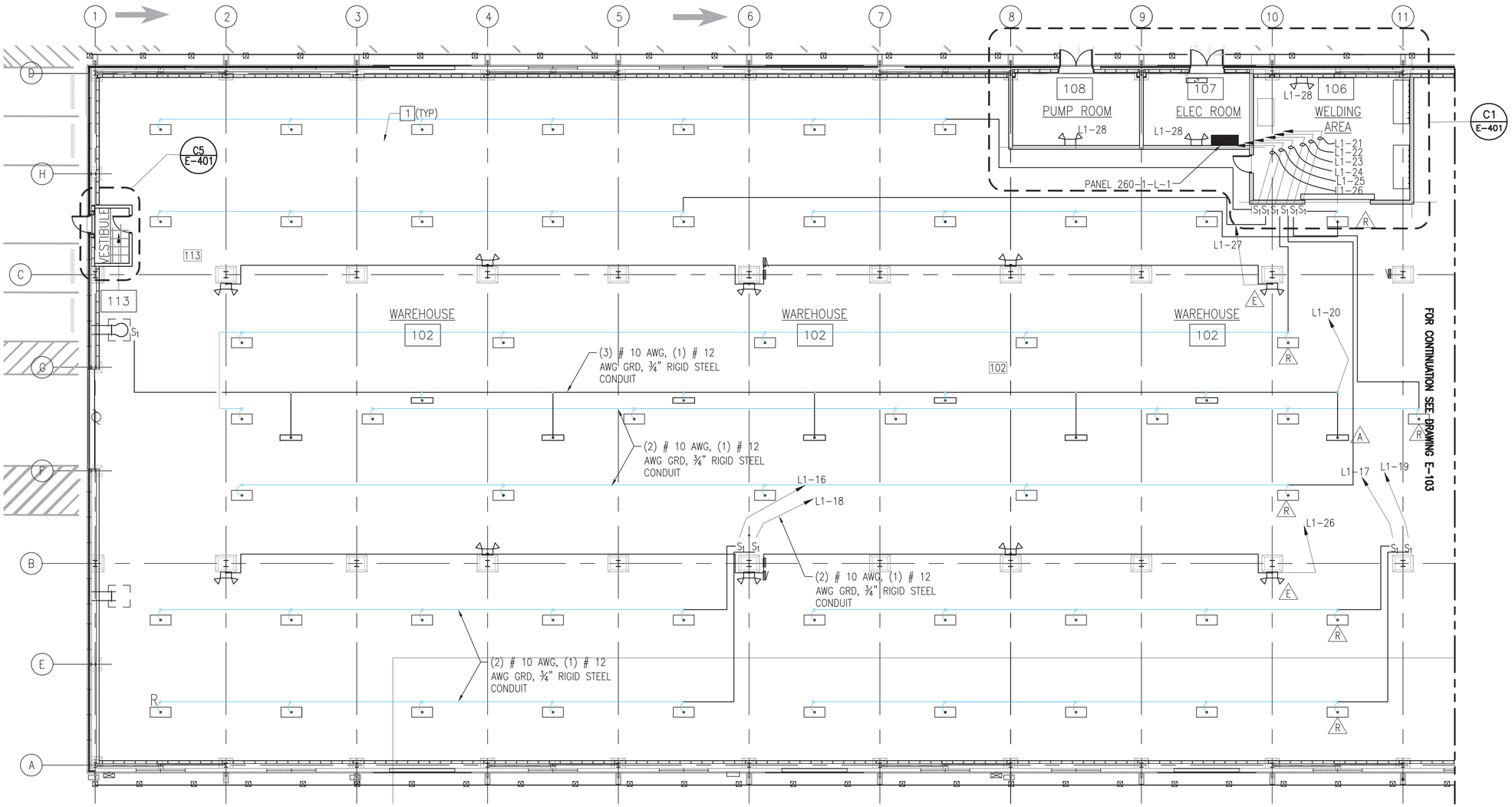

ELECTRICAL LIGHTING NEW WORK PLAN

SCALE: 3/32" = 1'-0"

PLAN NORTH

GENERAL NOTES

1. CONTRACTOR SHALL FIELD VERIFY ALL EXISTING DIMENSIONS AND CONDITIONS PRIOR TO BEGINNING CONSTRUCTION. ANY DISCREPANCIES BETWEEN FIELD CONDITIONS AND THE CONTRACT DRAWINGS SHALL BE BROUGHT TO THE ATTENTION OF THE CONTRACTING OFFICER.
2. UNLESS OTHERWISE NOTED, ALL NEW WORK LIGHTING NOTES APPLY TO SHEETS E-102 AND E-103.

[X] NEW WORK NOTES

1. REINSTALL EXISTING FLUORESCENT LIGHTING FIXTURES RETAINED UNDER DEMOLITION AND RECONNECT AS SHOWN. PROVIDE ALL NEW LAMPS. THOROUGHLY CLEAN ALL SURFACES OF EACH FIXTURE AND DEMOLISH ALL EXISTING LAMPS. FOR FIXTURE CHARACTERISTICS, REFER TO LIGHT FIXTURE SCHEDULE ON DRAWING E-603.
2. EXISTING FIXTURES TO BE RE-INSTALLED TO BOTTOM OF CEILING IN LOCATION SHOWN. REATTACH THE FIXTURES TO THE NEW CEILING BY FASTENING TO A SECTION OF 1-1/2" X 3/4" CHANNEL SECURED TO THE CEILING WITH ⅜" BOLTS, WASHERS AND LOCK NUTS THROUGH THE LOWER CEILING BOARD THROUGH TO THE METAL DECK ABOVE. RE-USE THE CONNECTION CORD ON THE FIXTURE BY THREADING THROUGH A HOLE DRILLED THROUGH THE DECK.
3. THE CONDUIT FOR THE FIXTURE BRANCH CIRCUITS SHALL BE INSTALLED ON THE METAL DECK IN THE NEW ATTIC SPACE. PROVIDE NEW 4" SQUARE METAL BOXES ATTACHED TO THE METAL DECK ADJACENT TO EACH FIXTURE LOCATION. CONNECT THE CORD TO THE CONDUCTORS IN THE BOX AND USE A CORD CONNECTOR AND A BLANK PLATE ON EACH BOX.
4. ALL CONDUIT SHALL BE ¾" RIGID METAL GALVANIZED STEEL WITH APPROPRIATE COUPLINGS, LOCKNUTS AND BUSHINGS. ALL CONDUITS SHALL CONTAIN A GROUNDING CONDUCTOR AND ALL BOXED SHALL BE PROPERLY GROUNDED WITH A GROUNDING SCREW TO THE BOX.
5. THE RE-INSTALLED FIXTURES SHALL BE LOCATED AS CLOSE AS POSSIBLE TO THE POSITIONS SHOWN. PRIOR TO THE INSTALLATION, THE CONTRACTOR SHALL MAKE A LAYOUT ENSURE THAT SYMMETRY IS MAINTAINED FOR A UNIFORM APPEARANCE.
6. ALL CONDUCTORS SHALL BE COPPER, #10 AWG, THHN/THWN. ALL CONDUITS SHALL CONTAIN NO MORE THAN (1) CIRCUIT. ALL HOME RUNS SHALL BE INSTALLED FROM THE NEAREST FIXTURE BACK TO THE LIGHTING PANEL IN THE ELECTRICAL ROOM. THE CONTROL WIRING FROM THE LIGHTING PANEL SHALL BE IN (3) ¾" RIGID STEEL CONDUITS WITH X WIRES, (1) FEEDER AND (X) TO EACH RELAY/MOTORIZED BREAKER.
7. ALL FIXTURES LABELED WITH AN "A" ARE TO BE PROVIDED FOR THE NEW ATTIC SPACE CREATED BY THE NEW CEILING IN THE MAIN BAY. THESE FIXTURES ARE PENDANT MOUNTED AS SHOWN IN THE LIGHTING SCHEDULE. USE ¾" RIGID GALVANIZED STEEL CONDUIT, 4" SQUARE BOXES, AND ⅜" FLEXIBLE METAL CONDUIT FROM EACH BOX TO THE FIXTURE. THESE FIXTURES SHALL BE SWITCHED BY A SINGLE POLE TOGGLE SWITCH IN AN FS BOX LOCATED NEAR TO THE LADDER TO THE ATTIC AREA. THESE CIRCUITS ARE NOT TO BE REMOTE SWITCHED.

KEY PLAN

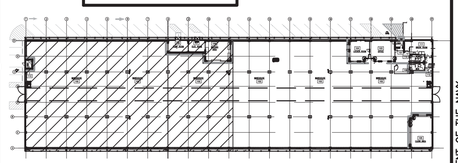

GRAPHIC SCALE

0 5'-4" 10'-8" 21'-4"

SCALE: 3/32" = 1'-0"

APPR | DATE | DESCRIPTION | SYM

NAVFAC

SCAL

A/E INFO

APPROVED
FOR COMMANDER NAVFAC 3/23/15

ACTIVITY

SATISFACTORY TO DATE 3-23-15

DES JWM | DRW JWM | CHK RDM

<<PM/DM>> R. M. RUSSELL

BRANCH MANAGER

ENGR DIRECTOR Ralph D. Deal

CUSTOMER

DEPARTMENT OF THE NAVY
NAVAL FACILITIES ENGINEERING COMMAND
PWD PORTSMOUTH

NAVAL FACILITIES ENGINEERING COMMAND – MID ATLANTIC
NORFOLK NAVAL SHIPYARD – PORTSMOUTH, VIRGINIA

NORFOLK NAVAL SHIPYARD
PORTSMOUTH, VIRGINIA

B260 EXTENSIVE REPAIRS

ELECTRICAL LIGHTING NEW WORK PLAN

SCALE: AS NOTED

EPROJECT NO.: 1146716

CONSTR. CONTR. NO. N40085-15-R-0018

NAVFAC DRAWING NO. 12682063

SHEET 109 OF 118

E-102

DRAWFORM REVISION: 10 MARCH 2009

FILE NAME: C:\Users\jerry.meade\Documents\Autocad Dwgs\B 260 Renovation Final\BJOB260-1146716-E-102.dwg LAYOUT NAME: E-102 PLOTTED: Monday, March 30, 2015 - 4:15pm USER: jerry.meade

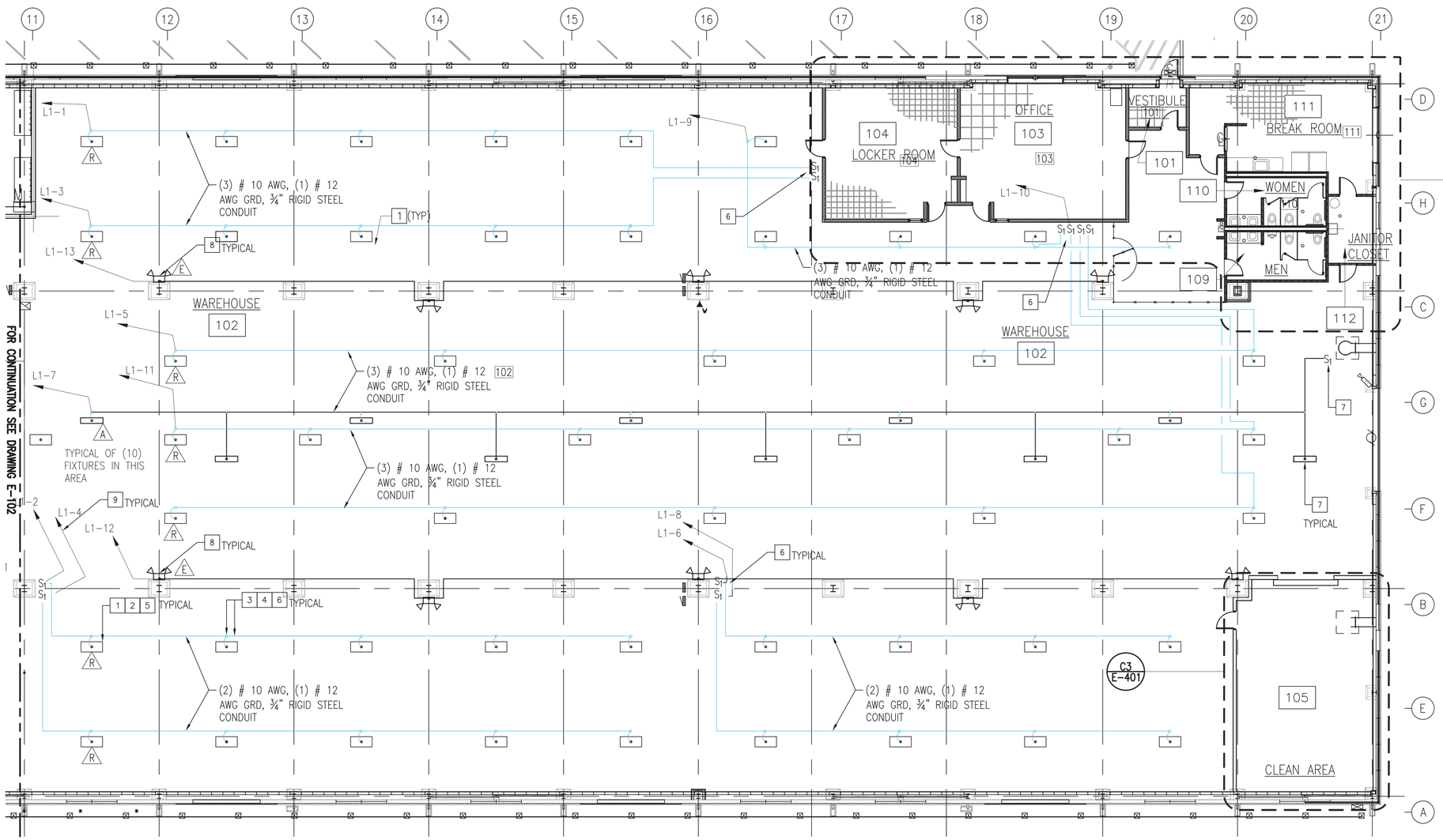

ELECTRICAL LIGHTING NEW WORK PLAN

SCALE: 3/32" = 1'-0"

PLAN NORTH

GENERAL NOTES

1. CONTRACTOR SHALL FIELD VERIFY ALL EXISTING DIMENSIONS AND CONDITIONS PRIOR TO BEGINNING CONSTRUCTION. ANY DISCREPANCIES BETWEEN FIELD CONDITIONS AND THE CONTRACT DRAWINGS SHALL BE BROUGHT TO THE ATTENTION OF THE CONTRACTING OFFICER.
2. UNLESS OTHERWISE NOTED, ALL NEW LIGHTING NOTES APPLY TO SHEETS E-102 AND E-103.

[X] NEW WORK NOTES

1. REINSTALL EXISTING FLUORESCENT LIGHTING FIXTURES RETAINED UNDER DEMOLITION AND RECONNECT AS SHOWN. PROVIDE ALL NEW LAMPS. THOROUGHLY CLEAN ALL SURFACES OF EACH FIXTURE AND DEMOLISH ALL EXISTING LAMPS. FOR FIXTURE CHARACTERISTICS, REFER TO LIGHT FIXTURE SCHEDULE ON DRAWING E-603.
2. EXISTING FIXTURES TO BE RE-INSTALLED TO BOTTOM OF CEILING IN LOCATION SHOWN. REATTACH THE FIXTURES TO THE NEW CEILING BY FASTENING TO A SECTION OF 1-1/2" X 3/4" CHANNEL SECURED TO THE CEILING WITH ⅜" BOLTS, WASHERS AND LOCK NUTS THROUGH THE LOWER CEILING BOARD THROUGH TO THE METAL DECK ABOVE. RE-USE THE CONNECTION CORD ON THE FIXTURE BY THREADING THROUGH A HOLE DRILLED THROUGH THE DECK.
3. THE CONDUIT FOR THE FIXTURE BRANCH CIRCUITS SHALL BE INSTALLED ON THE TOP OF THE NEW METAL DECK IN THE ATTIC OR MEZZANINE SPACE. PROVIDE NEW 4" SQUARE METAL BOXES ATTACHED TO THE METAL DECK ADJACENT TO EACH FIXTURE LOCATION. CONNECT THE CORD TO THE CONDUCTORS IN THE BOX AND USE A CORD CONNECTOR AND A BLANK PLATE ON EACH BOX.
4. ALL CONDUIT SHALL BE ¾" RIGID METAL GALVANIZED STEEL WITH APPROPRIATE COUPLINGS, LOCKNUTS AND BUSHINGS. ALL CONDUITS SHALL CONTAIN A GROUNDING CONDUCTOR AND ALL BOXED SHALL BE PROPERLY GROUNDED WITH A GROUNDING SCREW TO THE BOX.
5. THE RE-INSTALLED FIXTURES SHALL BE LOCATED AS CLOSE AS POSSIBLE TO THE POSITIONS SHOWN. PRIOR TO THE INSTALLATION, THE CONTRACTOR SHALL MAKE A LAYOUT ENSURE THAT SYMMETRY IS MAINTAINED FOR A UNIFORM APPEARANCE.
6. ALL CONDUCTORS SHALL BE COPPER, #10 AWG, THHN/THWN. ALL CONDUITS SHALL CONTAIN NO MORE THAN (1) CIRCUIT. ALL HOME RUNS SHALL BE INSTALLED FROM THE NEAREST FIXTURE OR SINGLE POLE SWITCH BACK TO THE LIGHTING PANEL IN THE ELECTRICAL ROOM. THE SINGLE POLE TOGGLE SWITCHES SHALL BE 20 AMP, 277 VOLT, SPECIFICATION GRADE INSTALLED SURFACE MOUNTED IN AN FS TYPE BOX WITH SINGLE OR MULTIPLE GANGED HUBS.
7. ALL FIXTURES LABELED WITH AN "A" ARE TO BE PROVIDED FOR THE NEW ATTIC SPACE CREATED BY THE NEW CEILING IN THE MAIN BAY. THESE FIXTURES ARE PENDANT MOUNTED AS SHOWN IN THE LIGHTING SCHEDULE. USE ¾" RIGID GALVANIZED STEEL CONDUIT, 4" SQUARE BOXES, AND ⅜" FLEXIBLE METAL CONDUIT FROM EACH BOX TO THE FIXTURE. THESE FIXTURES SHALL BE SWITCHED BY A SINGLE POLE TOGGLE SWITCH IN AN FS BOX LOCATED ON THE PLATFORM AT THE TOP OF THE LADDER THAT PROVIDES ACCESS TO THE ATTIC SPACE.
8. TYPE "E" FIXTURES MOUNTED TO COLUMNS AT 15' AFF.
9. (2) # 10 AWG, 1# 12 AWG GRD, ¾" RIGID STEEL CONDUIT (TYPICAL OF ALL HIGH BAY LIGHTING).

KEY PLAN

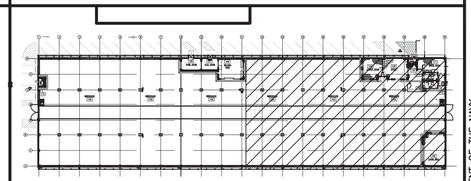

GRAPHIC SCALE

0 5'-4" 10'-8" 21'-4"

SCALE: 3/32" = 1'-0"

APPR | DATE | DESCRIPTION | SYM

SEAL

A/E INFO

APPROVED
for RALPH DEAL 3/2/15
FOR COMMANDER NAVFAC

ACTIVITY
SATISFACTORY TO DATE 3-23-15
DES JWM DRW JWM CHK RDM
<<PM/DM>> R. M. RUSSELL
BRANCH MANAGER
ENGR DIRECTOR Ralph D. Deal
CUSTOMER

DEPARTMENT OF THE NAVY
NAVAL FACILITIES ENGINEERING COMMAND
PWD PORTSMOUTH

NAVAL FACILITIES ENGINEERING COMMAND – MID ATLANTIC
NORFOLK NAVAL SHIPYARD – PORTSMOUTH, VIRGINIA

NORFOLK NAVAL SHIPYARD
PORTSMOUTH, VIRGINIA

B260 EXTENSIVE REPAIRS

ELECTRICAL LIGHTING NEW WORK PLAN

SCALE: AS NOTED
EPROJECT NO.: 1146716
CONSTR. CONTR. NO.: N40085-15-R-0018
NAVFAC DRAWING NO.: 12682064
SHEET 110 OF 118

E-103

DRAWFORM REVISION: 10 MARCH 2009

FILE NAME: C:\Users\jerry.meade\Documents\Autocad Dwgs\B 260 Renovation Final\BUC260--1146716-E-103.dwg LAYOUT NAME: E-103 PLOTTED: Monday, March 30, 2015 - 5:33pm USER: jerry.meade

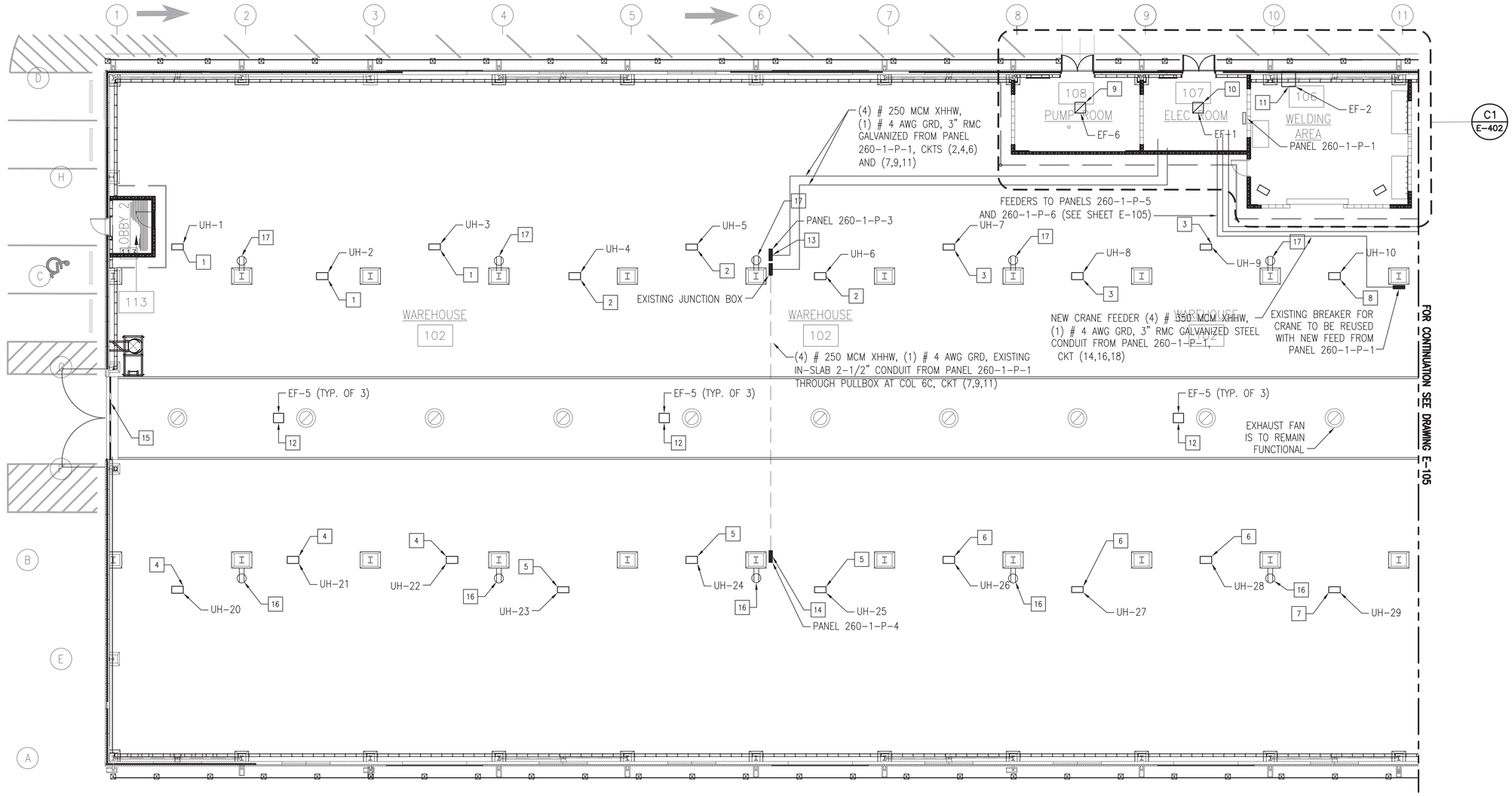

ELECTRICAL POWER NEW WORK PLAN

SCALE: 3/32" = 1'-0"

PLAN NORTH

X NEW WORK NOTES

1. UNIT HEATERS SHALL BE FED WITH #12 THHN/THWN IN 3/4" RGS. FEED FROM PANEL 260-1-P-3. PROVIDE 20A, 120V, SINGLE POLE CIRCUIT BREAKER.
2. UNIT HEATERS SHALL BE FED WITH #12 THHN/THWN IN 3/4" RGS. FEED FROM PANEL 260-1-P-3. PROVIDE 20A, 120V, SINGLE POLE CIRCUIT BREAKER.
3. UNIT HEATERS SHALL BE FED WITH #12 THHN/THWN IN 3/4" RGS. FEED FROM PANEL 260-1-P-3. PROVIDE 20A, 120V, SINGLE POLE CIRCUIT BREAKER.
4. UNIT HEATERS SHALL BE FED WITH #12 THHN/THWN IN 3/4" RGS. FEED FROM PANEL 260-1-P-4. PROVIDE 20A, 120V, SINGLE POLE CIRCUIT BREAKER.
5. UNIT HEATERS SHALL BE FED WITH #12 THHN/THWN IN 3/4" RGS. FEED FROM PANEL 260-1-P-4. PROVIDE 20A, 120V, SINGLE POLE CIRCUIT BREAKER.

X NEW WORK NOTES

6. UNIT HEATERS SHALL BE FED WITH #12 THHN/THWN IN 3/4" RGS. FEED FROM PANEL 260-1-P-4. PROVIDE 20A, 120V, SINGLE POLE CIRCUIT BREAKER.
7. UNIT HEATERS SHALL BE FED WITH #12 THHN/THWN IN 3/4" RGS. FEED FROM PANEL 260-1-P-4. PROVIDE 20A, 120V, SINGLE POLE CIRCUIT BREAKER.
8. UNIT HEATERS SHALL BE FED WITH #12 THHN/THWN IN 3/4" RGS. FEED FROM PANEL 260-1-P-3. PROVIDE 20A, 120V, SINGLE POLE CIRCUIT BREAKER.
9. PROVIDE (2)-#12 THHN/THWN & (1)-#12 GROUND IN 3/4" RGS. FOR FINAL CONNECTIONS TO UNIT USE 3/4" FLEXIBLE METAL CONDUIT. PROVIDE A 20A, 120V, SINGLE POLE CIRCUIT BREAKER IN PANEL 260-1-P-1 TO FEED EF-6. PROVIDE A 30A, 600V, HEAVY DUTY DISCONNECT IN A NEMA 3R ENCLOSURE.

X NEW WORK NOTES

10. PROVIDE (2)-#12 THHN/THWN & (1)-#12 GROUND IN 3/4" RGS. FOR FINAL CONNECTIONS TO UNIT USE 3/4" FLEXIBLE METAL CONDUIT. PROVIDE A 20A, 120V, SINGLE POLE CIRCUIT BREAKER IN PANEL 260-1-P-1 TO FEED EF-1. PROVIDE A 30A, 600V, HEAVY DUTY DISCONNECT IN A NEMA 3R ENCLOSURE.
11. PROVIDE (2)-#12 THHN/THWN & (1)-#12 GROUND IN 3/4" RGS. FOR FINAL CONNECTIONS TO UNIT USE 3/4" FLEXIBLE METAL CONDUIT. PROVIDE A 20A, 120V, SINGLE POLE CIRCUIT BREAKER IN PANEL 260-1-P-1 TO FEED EF-2. PROVIDE A 30A, 600V, HEAVY DUTY DISCONNECT IN A NEMA 3R ENCLOSURE.
12. PROVIDE COMBINATION STARTER FOR EXHAUST FANS (EF-5, TYP. OF 3) CONTROLLER. STARTER SHALL BE NEMA SIZE 0, 600V, HEAVY DUTY, 30A, 3PHASE W/ AUTO-OFF-ON SWITCH IN FRONT. ENCLOSURE SHALL BE NEMA 1. PROVIDE OVERLOAD UNITS BASED ON NAMEPLATE DATA. PROVIDE 208V COILS. REUSE EXISTING CONDUCTOR AND CONDUIT. FEED FROM PANEL 260-1-P-3 WITH 20A, 208V, 3POLE BOLT-ON CIRCUIT BREAKERS.

X NEW WORK NOTES

13. PROVIDE A 225A, 208Y/120V, 3PHASE, 4WIRE, 30 SPACE, MCB PANELBOARD. PROVIDE (4)-250MCM & (1)-#4 GROUND. PROVIDE 300A, 208V, 3POLE CIRCUIT BREAKER TO FEED NEW PANEL FROM MDP.
14. PROVIDE A 225A, 208Y/120V, 3PHASE, 4WIRE, 30 SPACE, MCB PANELBOARD. PROVIDE (4)-250MCM & (1)-#4 GROUND. REUSE EXISTING UNDERGROUND CONDUIT FOR FEEDERS BACK TO PANEL MDP. PROVIDE 300A, 208V, 3POLE CIRCUIT BREAKER TO FEED NEW PANEL.
15. PROVIDE (3)-#10 THHN/THWN & (1)-#12 GROUND IN 3/4" RGS TO FEED ROLL UP DOOR ELB-1. FEED FROM PANEL 260-1-P-4 WITH A NEW 20A, 208V, 3POLE CIRCUIT BREAKER.
16. PROVIDE 20A, 120V, RECEPTACLES. FEED FROM PANEL 160-1-P-4. UTILIZE EXISTING CONDUIT AND BOXES.
17. PROVIDE 20A, 120V, RECEPTACLES. FEED FROM PANEL 160-1-P-3. UTILIZE EXISTING CONDUIT AND BOXES.

KEY PLAN

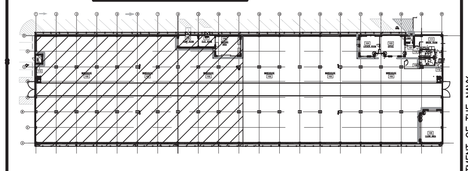

GRAPHIC SCALE

3/32"=1'-0" 0' 8' 16' 24'

SYM	DESCRIPTION	DATE	APPR

NAVFAC

A/E INFO

APPROVED
FOR COMMANDER NAVFAC 3/23/15

ACTIVITY
SATISFACTORY TO DATE 3-23-15

DES	RDM	DRW	RDM	CHK	JWM

<<PM/TM>> R. M. RUSSELL
BRANCH MANAGER
ENGR DIRECTOR Ralph D. Deal
CUSTOMER

DEPARTMENT OF THE NAVY
NAVAL FACILITIES ENGINEERING COMMAND – MID ATLANTIC
PWD PORTSMOUTH
NAVAL FACILITIES ENGINEERING COMMAND
NORFOLK NAVAL SHIPYARD – PORTSMOUTH, VIRGINIA
NORFOLK NAVAL SHIPYARD
PORTSMOUTH, VIRGINIA

B260 EXTENSIVE REPAIRS

ELECTRICAL POWER NEW WORK PLAN

SCALE: AS NOTED
EPROJECT NO.: 1146716
CONSTR. CONTR. NO.: N40085-15-R-0018
NAVFAC DRAWING NO. 12682065
SHEET 111 OF 118

E-104

DRAWFORM REVISION: 10 MARCH 2009

FILE NAME: C:\Users\jerry.meade\Documents\Autocad Dwgs\B 260 Renovation Final\BUD260-1146716-E-104.dwg LAYOUT NAME: E-104 PLOTTED: Tuesday, March 31, 2015 - 11:05am USER: jerry.meade

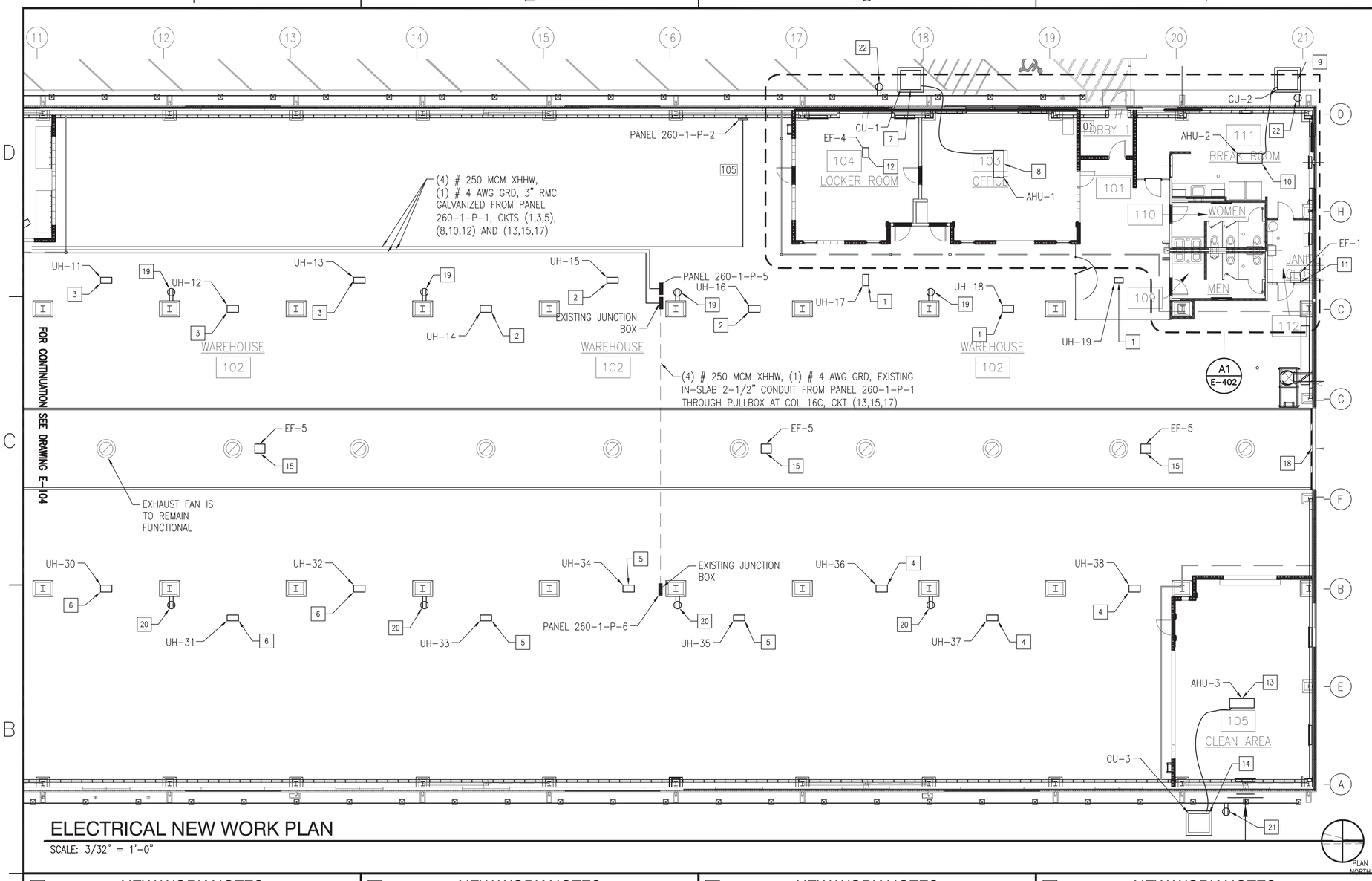

ELECTRICAL NEW WORK PLAN

SCALE: 3/32" = 1'-0"

X NEW WORK NOTES

1. UNIT HEATERS SHALL BE FED WITH #12 THHN/THWN IN 3/4" RGS. FEED FROM PANEL 260-1-P-5. PROVIDE 20A, 120V, SINGLE POLE CIRCUIT BREAKER.
2. UNIT HEATERS SHALL BE FED WITH #12 THHN/THWN IN 3/4" RGS. FEED FROM PANEL 260-1-P-5. PROVIDE 20A, 120V, SINGLE POLE CIRCUIT BREAKER.
3. UNIT HEATERS SHALL BE FED WITH #12 THHN/THWN IN 3/4" RGS. FEED FROM PANEL 260-1-P-5. PROVIDE 20A, 120V, SINGLE POLE CIRCUIT BREAKER.
4. UNIT HEATERS SHALL BE FED WITH #12 THHN/THWN IN 3/4" RGS. FEED FROM PANEL 260-1-P-6. PROVIDE 20A, 120V, SINGLE POLE CIRCUIT BREAKER.
5. UNIT HEATERS SHALL BE FED WITH #12 THHN/THWN IN 3/4" RGS. FEED FROM PANEL 260-1-P-6. PROVIDE 20A, 120V, SINGLE POLE CIRCUIT BREAKER.

X NEW WORK NOTES

6. UNIT HEATERS SHALL BE FED WITH #12 THHN/THWN IN 3/4" RGS. FEED FROM PANEL 260-1-P-6. PROVIDE 20A, 120V, SINGLE POLE CIRCUIT BREAKER.
7. PROVIDE (2)-#10 THHN/THWN & (1)-#10 GROUND IN 3/4" RGS. FOR FINAL CONNECTIONS TO UNIT USE 3/4" SEALTITE. PROVIDE 60A, 208V, 2POLE CIRCUIT BREAKER IN PANEL 260-1-P-2 TO FEED CU-1. PROVIDE A 60A, 600V, HEAVY DUTY DISCONNECT IN A NEMA 3R ENCLOSURE.
8. PROVIDE (2)-#12 THHN/THWN & (1)-#12 GROUND IN 3/4" RGS. FOR FINAL CONNECTIONS TO UNIT USE 3/4" FLEXIBLE CONDUIT. PROVIDE 20A, 208V, 2POLE CIRCUIT BREAKER IN PANEL 260-1-P-2 TO FEED AHU-1. PROVIDE A 30A, 600V, HEAVY DUTY DISCONNECT IN A NEMA 1 ENCLOSURE.
9. PROVIDE (2)-#8 THHN/THWN & (1)-#10 GROUND IN 3/4" RGS. FOR FINAL CONNECTIONS TO UNIT USE 3/4" SEALTITE. PROVIDE 45A, 208V, 2POLE CIRCUIT BREAKER IN PANEL 260-1-P-2 TO FEED CU-2. PROVIDE A 60A, 600V, HEAVY DUTY DISCONNECT IN A NEMA 3R ENCLOSURE.

X NEW WORK NOTES

10. PROVIDE (2)-#12 THHN/THWN & (1)-#12 GROUND IN 3/4" RGS. FOR FINAL CONNECTIONS TO UNIT USE 3/4" FLEXIBLE METAL CONDUIT. PROVIDE A 20A, 208V, 2POLE CIRUIT BREAKER IN PANEL 260-1-P-2 TO FEED AHU-2. PROVIDE A 30A, 600V, HEAVY DUTY DISCONNECT IN A NEMA 1 ENCLOSURE.
11. PROVIDE (2)-#12 THHN/THWN & (1)-#12 GROUND IN 3/4" RGS. FOR FINAL CONNECTIONS TO UNIT USE 3/4" FLEXIBLE METAL CONDUIT. PROVIDE A 20A, 120V, SINGLE POLE CIRCUIT BREAKER IN PANEL 260-1-P-2 TO FEED EF-1. PROVIDE A 30A, 600V, HEAVY DUTY DISCONNECT INA NEMA 1 ENCLOSURE.
12. PROVIDE (2)-#12 THHN/THWN & (1)-#12 GROUND IN 3/4" RGS. FOR FINAL CONNECTIONS TO UNIT USE 3/4" FLEXIBLE METAL CONDUIT. PROVIDE A 20A, 120V, SINGLE POLE CIRCUIT BREAKER IN PANEL 260-1-P-2 TO FEED EF-4. PROVIDE A 30A, 600V, HEAVY DUTY DISCONNECT IN A NEMA 1 ENCLOSURE.

X NEW WORK NOTES

13. PROVIDE (2)-#12 THHN/THWN & (1)-#12 GROUND IN 3/4" RGS. FOR FINAL CONNECTIONS TO UNIT USE 3/4" FLEXIBLE METAL CONDUIT. PROVIDE A 20A, 208V, 2POLE CIRUIT BREAKER IN PANEL 260-1-P-6 TO FEED AHU-3. PROVIDE A 30A, 600V, HEAVY DUTY DISCONNECT IN A NEMA 1 ENCLOSURE.
14. PROVIDE (2)-#6 THHN/THWN & (1)-#10 GROUND IN 3/4" RGS. FOR FINAL CONNECTIONS TO UNIT USE 3/4" FLEXIBLE METAL CONDUIT. PROVIDE A 35A, 208V, 2POLE CIRUIT BREAKER IN PANEL 260-1-P-6 TO FEED CU-3. PROVIDE A 30A, 600V, HEAVY DUTY DISCONNECT IN A NEMA 3R ENCLOSURE.
15. PROVIDE COMBINATION STARTER FOR EXHAUST FANS (EF-5, TYP. OF 3) CONTROLLER. STARTER SHALL BE NEMA SIZE 0, 600V, HEAVY DUTY, 30A, 3PHASE W/ AUTO-OFF-ON SWITCH IN FRONT. ENCLOSURE SHALL BE NEMA 1. PROVIDE OVERLOAD UNITS BASED ON NAMEPLATE DATA. PROVIDE 208V COILS. REUSE EXISTING CONDUCTOR AND CONDUIT. FEED FROM PANEL 260-1-P-5 WITH 20A, 208V, 3POLE BOLT-ON CIRCUIT BREAKERS.

X NEW WORK NOTES

16. PROVIDE A 225A, 208Y/120V, 3PHASE, 4WIRE, 30 SPACE, MCB PANELBOARD. PROVIDE (4)-250MCM & (1)-#4 GROUND. PROVIDE 300A, 208V, 3POLE CIRCUIT BREAKER TO FEED NEW PANEL FROM MDP.
17. PROVIDE A 225A, 208Y/120V, 3PHASE, 4WIRE, 30 SPACE, MCB PANELBOARD. PROVIDE (4)-250MCM & (1)-#4 GROUND. REUSE EXISTING UNDERGROUND CONDUIT BETWEEN EXISTING JUNCTION BOXES FOR FEEDERS BACK TO PANEL MDP. PROVIDE 300A, 208V, 3POLE CIRCUIT BREAKER TO FEED NEW PANEL.
18. PROVIDE (3)-#10 THHN/THWN & (1)-#12 GROUND IN 3/4" RGS TO FEED ROLL UP DOOR ELB-1. FEED FROM PANEL 260-1-P-6 WITH A NEW 20A, 208V, 3POLE CIRCUIT BREAKER.
19. PROVIDE 20A, 120V, RECEPTACLES. FEED FROM PANEL 260-1-P-5. UTILIZE EXISTING CONDUIT AND BOXES.
20. PROVIDE 20A, 120V, RECEPTACLES. FEED FROM PANEL 260-1-P-6. UTILIZE EXISTING CONDUIT AND BOXES.
21. PROVIDE A 20A, 120V, GFCI RECEPTACLE. FEED FROM PANEL 260-1-P-6. PROVIDE (2)-#10 & (1)-#12 GROUND IN 3/4" RGS.
22. PROVIDE 20A, 120V, GFCI RECEPTACLES. FEED FROM PANEL 260-1-P-5. PROVIDE (3)-#10 & (1)-#12 GROUND IN 3/4" RGS.

KEY PLAN

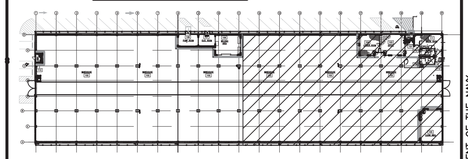

GRAPHIC SCALE

3/32"=1'-0" 0' 8' 16' 24'

APPR	
DATE	
DESCRIPTION	
SYM	

NAVFAC

A/E INFO

APPROVED
FOR COMMANDER NAVFAC 3/23/15

ACTIVITY
SATISFACTORY TO DATE 3-23-15

DES RDM | DRW RDM | CHK JWM

<CPM/EMP>: R. M. RUSSELL

BRANCH MANAGER

ENGR DIRECTOR Ralph D. Deal

CUSTOMER

DEPARTMENT OF THE NAVY
NAVAL FACILITIES ENGINEERING COMMAND
PWD PORTSMOUTH

NAVAL FACILITIES ENGINEERING COMMAND ~ MID ATLANTIC
NORFOLK NAVAL SHIPYARD ~ PORTSMOUTH, VIRGINIA

NORFOLK NAVAL SHIPYARD
PORTSMOUTH, VIRGINIA

B260 EXTENSIVE REPAIRS

ELECTRICAL POWER NEW WORK PLAN

SCALE: AS NOTED
EPROJECT NO.: 1146716
CONSTR. CONTR. NO. N40085-15-R-0018
NAVFAC DRAWING NO. 12682066
SHEET 112 OF 118

E-105

DRAWFORM REVISION: 10 MARCH 2009

FILE NAME: C:\Users\jerry.meade\Documents\Autocad Dwgs\B 260 Renovation Final\BLDG260-1146716-E-105.dwg LAYOUT NAME: E-105 PLOTTED: Tuesday, March 31, 2015 - 11:03am USER: jerry.meade

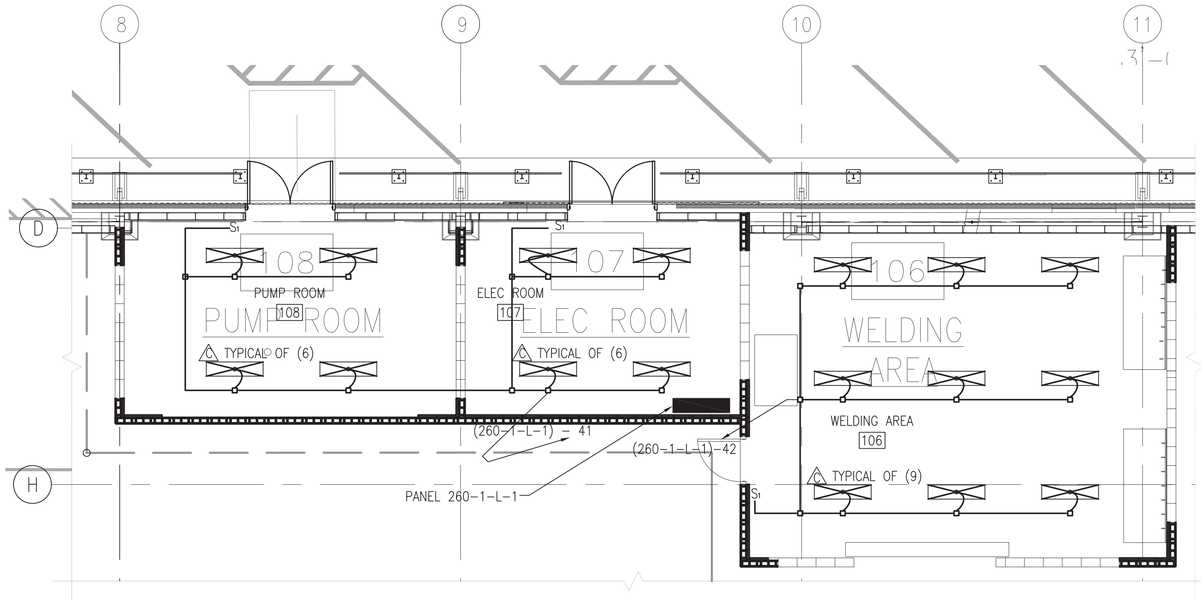

C1 E-401 **PARTIAL LIGHTING PLAN - UTILITY ROOMS**
SCALE: 3/16" = 1'-0"

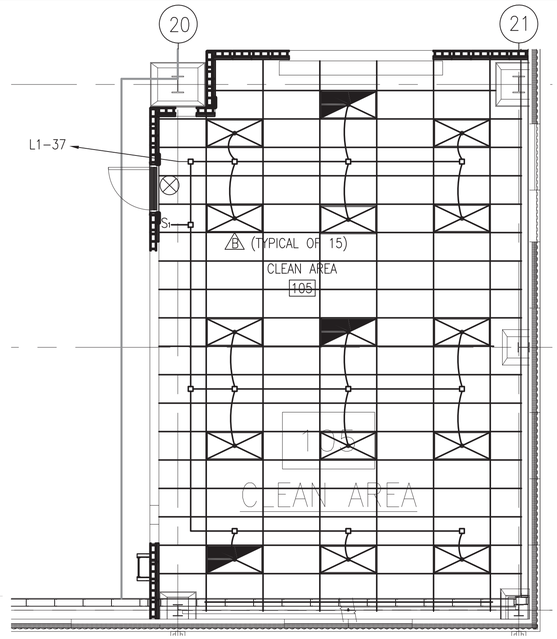

C3 E-401 **LIGHTING PLAN CLEAN ROOM**
SCALE: 3/16" = 1'-0"

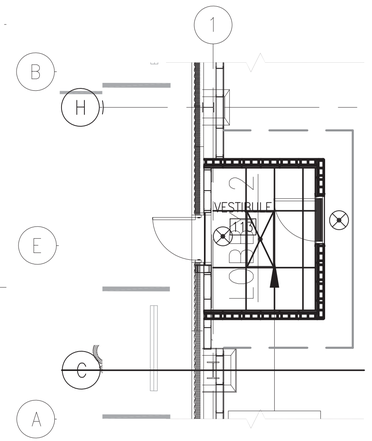

C5 E-401 **PARTIAL LIGHTING PLAN - VESTIBULE**
SCALE: 1/8" = 1'-0"

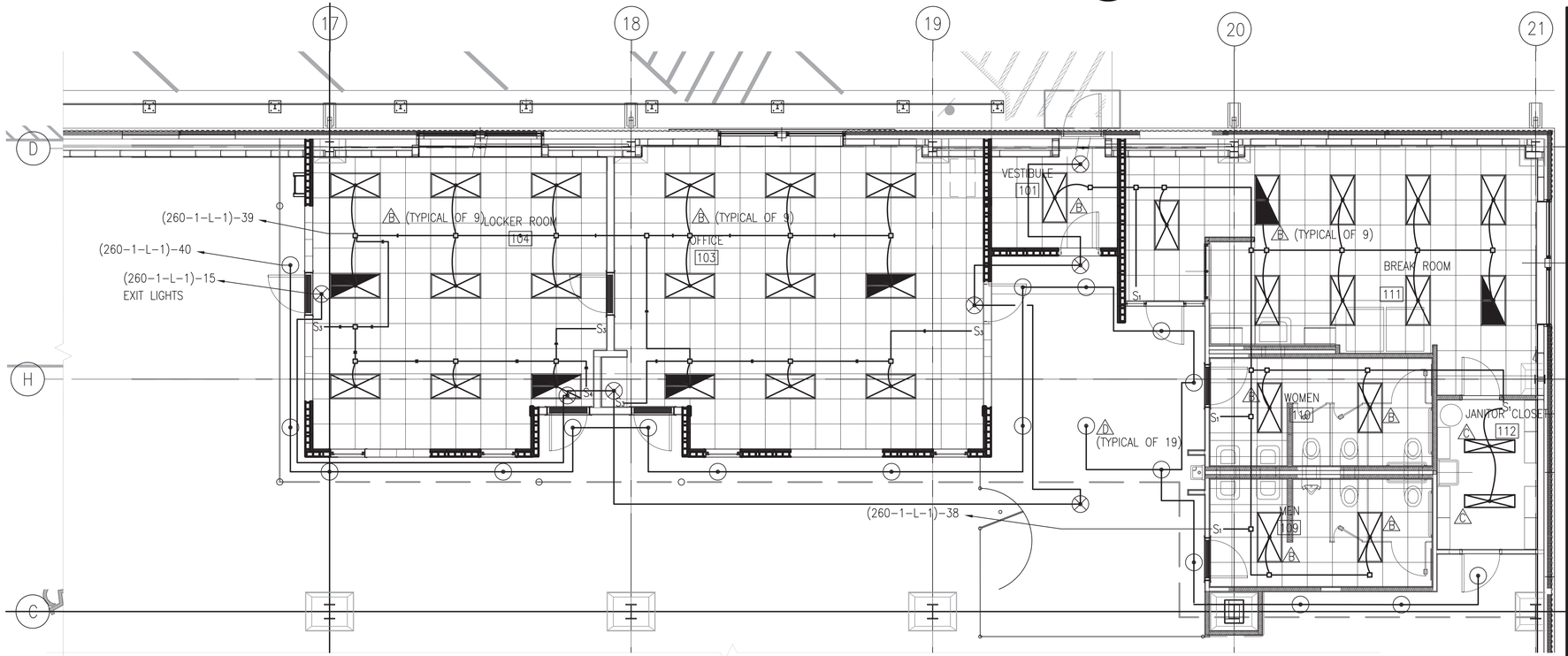

A1 E-401 **PARTIAL LIGHTING PLAN - OFFICE AREA**
SCALE: 3/16" = 1'-0"

NEW WORK LIGHTING NOTES

1. PROVIDE TYPE B FIXTURES IN ALL ACOUSTICAL TILE SECTIONS – OFFICE, BREAK ROOM, LOCKER ROOM, REST ROOMS AND CLEAN ROOM. THESE FIXTURES SHALL BE INDEPENDENTLY SUPPORTED FROM THE BUILDING ABOVE THE LAY-IN CEILING WITH APPROPRIATELY SIZED HANGER WIRE.
2. PROVIDE SURFACE MOUNTED TYPE C FIXTURES IN JANITOR CLOSET, ELECTRICAL ROOM, FIRE PUMP ROOM, WELDING ROOM. THESE FIXTURES SHALL BE FASTENED DIRECTLY TO THE CEILING WITH APPROPRIATE SCREWS, LAG BOLTS, TOGGLE BOLTS OR PENDANTS ATTACHED TO STEEL BOXES.
3. PROVIDE DOWN LIGHT TYPE D IN CANOPY AREA AROUND OFFICE, BREAK ROOM AND LOCKER ROOM. SECURE THE FIXTURES TO THE CEILING MATERIAL WITH PROPER FASTENERS. ACCESS TO THE WIRE CONNECTIONS SHALL BE THROUGH THE FIXTURE HOUSING.
4. ALL CONDUIT IN THE OFFICE, BREAK ROOM, LOCKER ROOM AREAS SHALL BE EMT, MINIMUM SIZE ¾", EXCEPT TAILS TO LIGHTING FIXTURES WHICH CAN BE ⅜" FMC, NO LONGER THAN 72".
5. OUTSIDE THE PERIMETER OF THE OFFICE, BREAK ROOM, LOCKER ROOM AREA, ALL CONDUIT SHALL BE RIGID METAL GALVANIZED STEEL, MINIMUM SIZE ¾". TAILS TO FIXTURES CAN BE ⅜" FMC, NO LONGER THAN 72".
6. ALL CONDUCTORS SHALL BE SOLID COPPER, THHN/THWN INSULATION (UNLESS OTHERWISE NOTED), MINIMUM SIZE # 12 AWG.
7. ALL CONDUITS SHALL CONTAIN A SEPARATE GROUNDING CONDUCTOR AND ALL DEVICES, EQUIPMENT AND BOXES SHALL BE PROPERLY GROUNDED.
8. IN OFFICE, BREAK ROOM, LOCKER ROOM AND REST ROOMS, ALL ELECTRICAL DEVICES (SWITCHES, RECEPTACLES, ETC. SHALL BE FLUSH MOUNTED WITH SPECIFICATION GRADE DEVICES AND STAINLESS STEEL PLATES.
9. ALL PULL BOXES SHOWN BY A SQUARE SYMBOL ON THE LAYOUT SHALL BE A 4" SQUARE STEEL BOX WITH A BLANK COVER PLATE, SECURELY FASTENED TO THE BUILDING STEEL WITH APPROPRIATE SCREWS AND/OR BOLTS AND NUTS.
10. HALF SHADED FIXTURE SYMBOLS ARE NIGHTLIGHTS WITH EMERGENCY BATTERY PACK. CONNECT DIRECTLY TO BRANCH CIRCUIT AHEAD OF SWITCHING.

GRAPHIC SCALE

0 4' 8' 16'

SCALE: 1/8" = 1'-0"

APPR	DATE	DESCRIPTION	SYM

NAVFAC

A/E INFO

APPROVED
FOR COMMANDER NAVFAC 3/23/15

ACTIVITY
SATISFACTORY TO DATE 3-23-15

DES JWM DRW JWM CHK RDM

<<PM/DM>> R. M. RUSSELL

BRANCH MANAGER

ENGR DIRECTOR Ralph D. Deal

CUSTOMER

DEPARTMENT OF THE NAVY
NAVAL FACILITIES ENGINEERING COMMAND
PWD PORTSMOUTH
NORFOLK NAVAL SHIPYARD
NAVAL FACILITIES ENGINEERING COMMAND ~ MID ATLANTIC
NORFOLK NAVAL SHIPYARD - PORTSMOUTH, VIRGINIA
PORTSMOUTH, VIRGINIA

B260 EXTENSIVE REPAIRS

ELECTRICAL ENLARGED NEW WORK LIGHTING PLANS

SCALE: AS NOTED
EPROJECT NO.: 1146716
CONSTR. CONTR. NO.: N40085-15-R-0018
NAVFAC DRAWING NO.: 12682067
SHEET 113 OF 118

E-401

DRAWFORM REVISION: 10 MARCH 2009

FILE NAME: C:\Users\jerry.meade\Documents\Autocad Dwgs\B 260 Renovation Final\BLDG260-1146716-E-401.dwg LAYOUT NAME: E-401 PLOTTED: Monday, March 30, 2015 - 4:09pm USER: jerry.meade

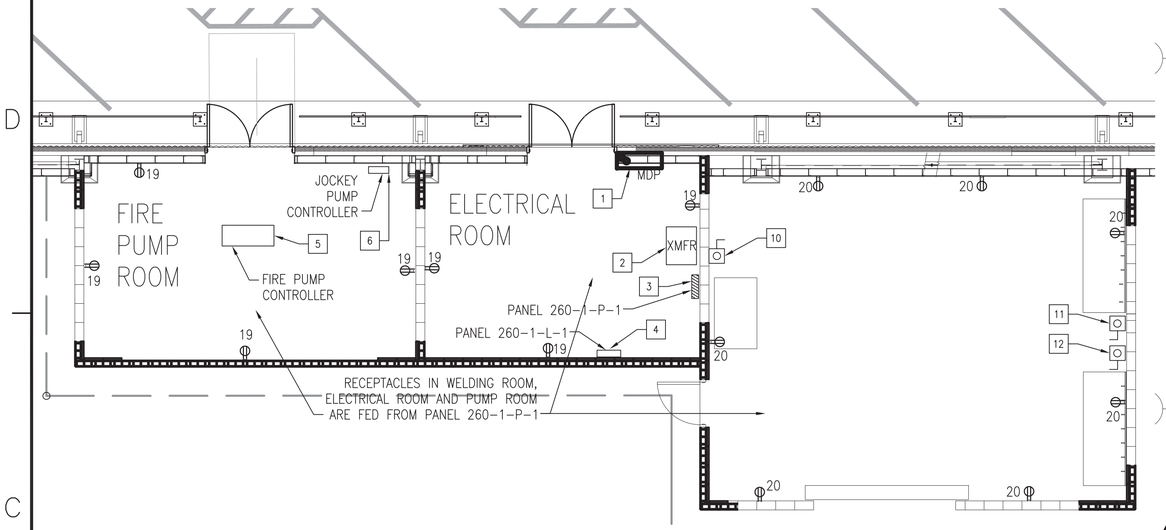

C1 E-402 **PARTIAL POWER PLAN - UTILITY ROOMS**
SCALE: 3/16" = 1'-0"

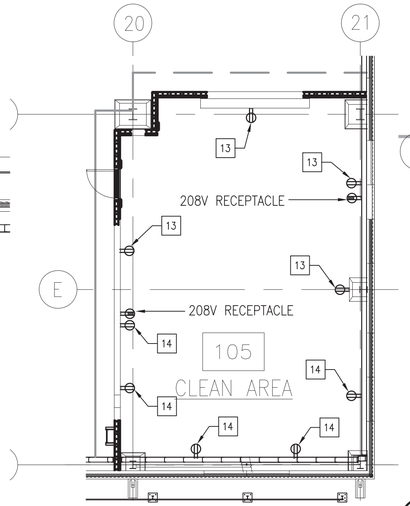

C3 E-402 **PARTIAL POWER PLAN - CLEAN ROOM**
SCALE: 1/8" = 1'-0"

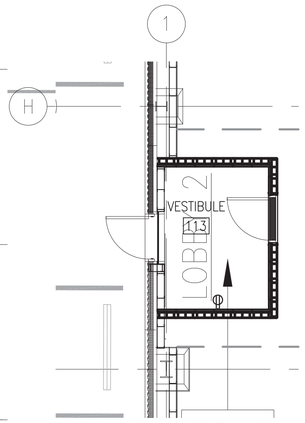

C4 E-402 **PARTIAL POWER PLAN - VESTIBULE**
SCALE: 1/8" = 1'-0"

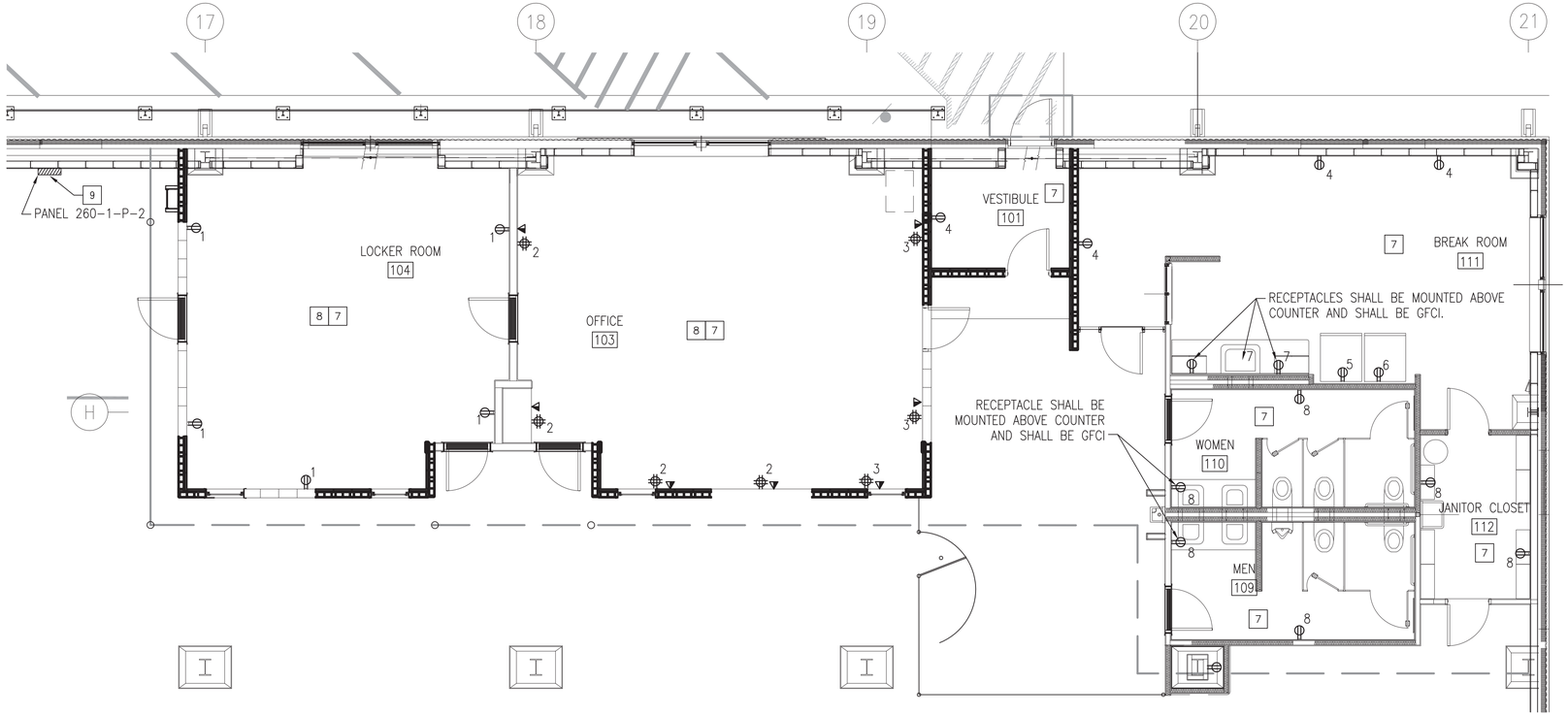

A1 E-402 **PARTIAL POWER PLAN - OFFICE AREA**
SCALE: 3/16" = 1'-0"

NEW WORK NOTES

1. PROVIDE 800A, 480Y/277V, 3ø, 4W, FLOOR MOUNTED SERVICE ENTRANCE SWITCHBOARD W/ HOUSEKEEPING PAD. MDP SHALL BE FED FROM SUBSTATON LOCATED OUTSIDE OF BUILDING. UTILIZE EXISTING CONDUIT. PROVIDE 2 SETS OF (4) – 500MCM THHN/THWN & (1) – 1/0 GROUND TO FED NEW MDP. PROVIDE AND MOUNT A INCLOSED CIRCUIT BREAKER ON THE SIDE OF SUBSTATION TO FEED MDP. SWITCH SHALL BE RATED AT 600V, 800A, HEAVY DUTY 4 POLE IN A STAINLESS STEEL NEMA 4 ENCLOSURE.
2. PROVIDE A 300KVA 480Y//208V/120 DRY-TYPE TRANSFORMER. TRANSFORMER SHALL BE FED FROM THE MAIN DISTRIBUTION PANEL WITH A 400A, 480V, 3POLE CIRCUIT BREAKER. NEW TRANSFORMER SHALL BE FED WITH (4)-500 MCM THHN/THWN IN 3" RGS.
3. PROVIDE 800A MCB, 208Y/120V, 3ø, 4W, 42 SPACE, SURFACE MOUNTED DISTRIBUTION PANELBOARD. PANELBOARD SHALL BE DOOR-IN-DOOR.
4. PROVIDE 225A MCB, 480Y/277V, 3ø, 4W, 42 POLES, SURFACE MOUNTED PANELBOARD. PANELBOARD SHALL BE DOOR-IN-DOOR.
5. PROVIDE (3) – 3/0 TYPE XHHW & (1) – #6 GROUND. CONDUCTOR SHALL BE IN 2" RGS AND FED FROM THE SECONDARY SIDE OF THE TRANSFORMER LOCATED OUTSIDE OF THE BUILDING. SEE SHEET E-101 FOR DETAILS
6. PROVIDE (3) – #12 THHN/THWN & (1) – #12 GROUND IN 3/4" RGS. PROVIDE A 20A, 480V, 3 POLE CIRCUIT BREAKER IN MDP TO FEED NEW JOCKEY PUMP.
7. PROVIDE FLUSH MOUNTED RECEPTACLES.
8. COMMUNICATION DEVICES SHOWN FOR REFERENCE ONLY. CLIENT TO COORDINATE WITH NMCI.
9. PROVIDE 225A, MCB, 208Y/120V, 3 PHASE, 4W, 42 POLES, SURFACE MOUNTED PANELBOARD. PANELBOARD SHALL BE FED FROM PANEL 260-1-P-1 WITH A NEW 250A, 208V, 3POLE CIRCUIT BREAKER WITH (4) – 4/0 THHN/THWN & (1) – #4 GROUND IN 2-1/2" RGS.
10. PROVIDE A 100A, 480V, 3PHASE, 4WIRE WELDING RECEPTACLE WITH 200A, 600V, 3POLE I-T-E ENCLOSED SWITCH, HEAVY DUTY, VACU-BREAK SWITCH, WITH CLAMPMATIC CONTACTS IN A NEMA 12 ENCLOSURE. PROVIDE 125A, 480V, 3POLE CIRCUIT BREAKER WITH (3)-#1 THHN/THWN & (1)-#8 GROUND IN 1-1/2" RGS.
11. PROVIDE A 60A, 480V, 3PHASE, 4WIRE WELDING RECEPTACLE WITH 100A, 600V, 3POLE I-T-E ENCLOSED SWITCH, HEAVY DUTY, VACU-BREAK SWITCH, WITH CLAMPMATIC CONTACTS IN A NEMA 12 ENCLOSURE. PROVIDE 80A, 480V, 3POLE CIRCUIT BREAKER WITH (3)-#4 THHN/THWN & (1)-#10 GROUND IN 1" RGS.
12. PROVIDE A 30A, 480V, 3PHASE, 4WIRE WELDING RECEPTACLE WITH 60A, 600V, 3POLE I-T-E ENCLOSED SWITCH, HEAVY DUTY, VACU-BREAK SWITCH, WITH CLAMPMATIC CONTACTS IN A NEMA 12 ENCLOSURE. PROVIDE 40A, 480V, 3POLE CIRCUIT BREAKER WITH (3)-#8 THHN/THWN & (1)-#10 GROUND IN ¾" RGS.
13. PROVIDE 20A, 120V, RECEPTACLES MOUNTED AT 18" A.F.F. RECEPTACLES ARE FED FROM PANEL 260-1-P-6 SAME CIRCUIT (TYP OF 4).
14. PROVIDE 20A, 120V, RECEPTACLES MOUNTED AT 18" A.F.F. RECEPTACLES ARE FED FROM PANEL 260-1-P-6 SAME CIRCUIT (TYP OF 5).

LEGEND

- PROVIDE 120V, 20A, RECEPTACLE MOUNTED AT 18" ABOVE FINISHED FLOOR. X INDICATES CIRCUIT NUMBER. ALL RECEPTACLES ARE TO BE FED FROM PANEL 260-1-P-2 U.O.N.
- PROVIDE 120V, 20A, QUAD-RECEPTACLE MOUNTED AT 18" ABOVE FINISHED FLOOR. X INDICATES CIRCUIT NUMBER. ALL RECEPTACLES ARE TO BE FED FROM PANEL 260-1-P-2 U.O.N.

GRAPHIC SCALE

1/8"=1'-0" 0' 4' 8' 16'

3/16"=1'-0" 0' 4' 8' 12'

APPR | DATE | DESCRIPTION | SYM

NAVFAC

A/E INFO

APPROVED
FOR RALPH DEAL 3/23/15
FOR COMMANDER NAVFAC

ACTIVITY
SATISFACTORY TO DATE 3-23-15

DES: RDM	DRW: RDM	CHK: JWM
<<PM/CM>>:	R. M. RUSSELL	
BRANCH MANAGER		
ENGR DIRECTOR	Ralph D. Deal	
CUSTOMER		

DEPARTMENT OF THE NAVY
NAVAL FACILITIES ENGINEERING COMMAND
PWD PORTSMOUTH

NAVAL FACILITIES ENGINEERING COMMAND ~ MID ATLANTIC
NORFOLK NAVAL SHIPYARD – PORTSMOUTH, VIRGINIA

NORFOLK NAVAL SHIPYARD
PORTSMOUTH, VIRGINIA

B260 EXTENSIVE REPAIRS

ELECTRICAL ENLARGED NEW WORK POWER PLANS

SCALE:	AS NOTED
EPROJECT NO.:	1146716
CONSTR. CONTR. NO.	N40085-15-R-0018
NAVFAC DRAWING NO.	12682068
SHEET	114 OF 118

E-402

DRAWFORM REVISION: 10 MARCH 2009

FILE NAME: C:\Users\jerry.meade\Documents\Autocad Dwgs\B 260 Renovation Final\BLDG260-1146716-E-402.dwg LAYOUT NAME: E-402 PLOTTED: Tuesday, March 31, 2015 - 11:00am USER: jerry.meade

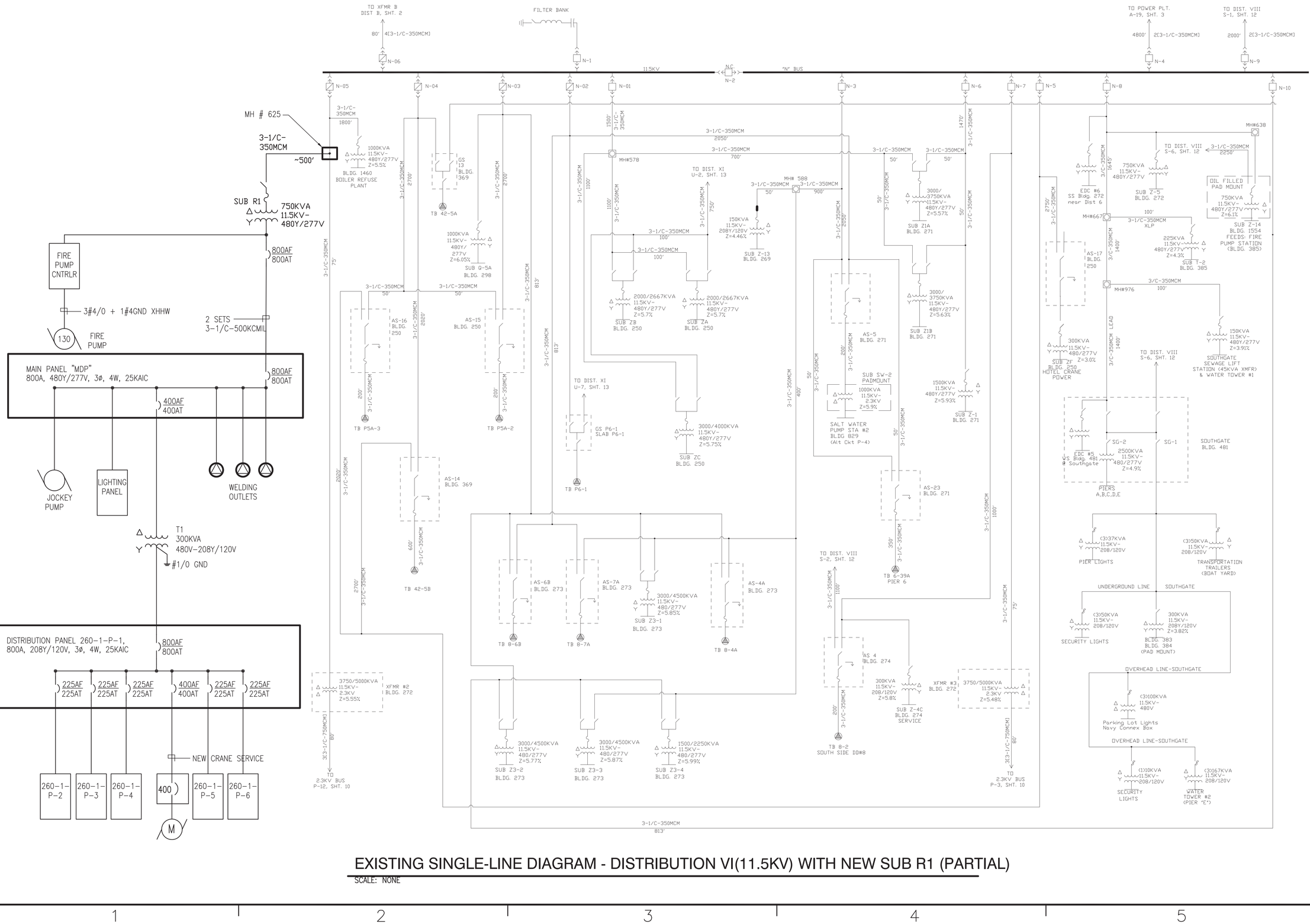

EXISTING SINGLE-LINE DIAGRAM - DISTRIBUTION VI(11.5KV) WITH NEW SUB R1 (PARTIAL)

SCALE: NONE

APPR	DATE	DESCRIPTION	SYM

NAVFAC

SEAL

A/E INFO

APPROVED
FOR COMMANDER NAVFAC
3/23/15

ACTIVITY
SATISFACTORY TO DATE 3-23-15

DES	JWM	DRW	JWM	CHK	JML

<<PM/DM>> R. M. RUSSELL
BRANCH MANAGER
ENGR DIRECTOR Ralph D. Deal
CUSTOMER

DEPARTMENT OF THE NAVY
NAVAL FACILITIES ENGINEERING COMMAND
PWD PORTSMOUTH
NAVAL FACILITIES ENGINEERING COMMAND ~ MID ATLANTIC
NORFOLK NAVAL SHIPYARD ~ PORTSMOUTH, VIRGINIA
NORFOLK NAVAL SHIPYARD
PORTSMOUTH, VIRGINIA

B260 EXTENSIVE REPAIRS

EXISTING SINGLE-LINE DIAGRAM ~ DISTRIBUTION VI(11.5KV)

SCALE: AS NOTED
EPROJECT NO.: 1146716
CONSTR. CONTR. NO.: N40085-15-R-0018
NAVFAC DRAWING NO.: 1268069
SHEET 115 OF 118

E-601

DRAWFORM REVISION: 10 MARCH 2009

FILE NAME: C:\Users\jerry.meade\Documents\Autocad Dwgs\B 260 Renovation Final\BLDG260-1146716-E-601.dwg LAYOUT NAME: E-601 PLOTTED: Monday, March 30, 2015 - 4:12pm USER: jerry.meade

PANEL MDP FED FROM SS R1

800A, MB, 480Y/277V, 3ø, 4W, 30 SPACE, W/ NEUTRAL AND GND BUSES
FULLY RATED FOR 25KAIC, 600V, BOLT-ON BREAKERS, NEMA 1 ENCL, SURFACE MTD

LOAD SERVED	LOAD (AMPS) A	B	C	CKT BKR KAIC	AMPS	CKT NO.	PHASE A B C	CKT NO.	CKT BKR AMPS	KAIC	LOAD (AMPS) A	B	C	LOAD SERVED
	3.4					1		2			360			
JOCKEY PUMP		3.4		–	20	3		4	450	–		360		XMFR
			3.4			5		6					360	
	225					7		8			48			
260-1-L-1		225		–	225	9		10	80	–		48		WELDING RECEPTACLE
			225			11		12					48	
	82					13		14			24			
WELDING RECEPTACLE		82		–	125	15		16	40	–		24		WELDING RECEPTACLE
			82			17		18					24	
	(0)					19		20			(0)			
SPARE		(0)		–	200	21		22	100			(0)		SPARE
			(0)			23		24					(0)	
	(0)					25		26			(0)			
SPARE		(0)		–	60	27		28	60	–		(0)		SPARE
			(0)			29		30					(0)	

PANEL 260-1-P-1 FED FROM PANEL "MDP" VIA XFMR T-1

800A, MCB, 208Y/120V, 3ø, 4W, 30 SPACE, W/ NEUTRAL AND GND BUSES
FULLY RATED FOR 22KAIC, 250V, BOLT-ON BREAKERS, NEMA 1 ENCL, SURFACE MTD

LOAD SERVED	LOAD (AMPS) A	B	C	CKT BKR KAIC	AMPS	CKT NO.	PHASE A B C	CKT NO.	CKT BKR AMPS	KAIC	LOAD (AMPS) A	B	C	LOAD SERVED
	180					1		2			180			
PANEL 260-1-P-2		180		–	225	3		4	225	–		180		PANEL 260-1-P-3
			180			5		6					180	
	180					7		8			180			
PANEL 260-1-P-4		180		–	225	9		10	225	–		180		PANEL 260-1-P-5
			180			11		12					180	
	180					13		14			(0)			
PANEL 260-1-P-6		180		–	225	15		16	300	–		(0)		CRANE
			180			17		18					(0)	
RECEPTACLES ELECTRICAL RM	(0)			–	20	19		20	20	–	(0)			RECEPTACLES WELDING RM
SPARE		(0)		–	20	21		22	20	–		(0)		SPARE
SPARE			(0)	–	20	23		24	20	–			(0)	SPARE
SPARE	(0)			–	20	25		26	20	–	(0)			SPARE
SPARE		(0)		–	20	27		28	20	–		(0)		SPARE
SPARE			(0)	–	20	29		30	20	–			(0)	SPARE

PANEL 260-1-P-2

225A, MCB, 208Y/120V, 3ø, 4W, 30 SPACE, W/ NEUTRAL AND GND BUSES
FULLY RATED FOR 22KAIC, 250V, BOLT-ON BREAKERS, NEMA 1 ENCL, SURFACE MTD

LOAD SERVED	LOAD (AMPS) A	B	C	CKT BKR KAIC	AMPS	CKT NO.	PHASE A B C	CKT NO.	CKT BKR AMPS	KAIC	LOAD (AMPS) A	B	C	LOAD SERVED
RECEPTACLES LOCKER RM	16			–	20	1		2	20	–	16			RECEPTACLES OFFICE
RECEPTACLES OFFICE		16		–	20	3		4	20	–		16		REC VESTIBULE/BREAK ROOM
ICE MACHINE BREAK RM			16	–	20	5		6	20	–			16	REFRIGERATOR
REC BREAK ROOM	8			–	20	7		8	20	–	16			REC JANITOR CLOSET/BATHROOMS
EF-4		4.4		–	20	9		10	60	–		28		CU-1
AHU-1			12	–	20	11		12					28	
	12					13		14	20	–	3			EF-1
AHU-2		4		–	20	15		16	45	–		21		CU-2
			4			17		18					21	
SPARE	(0)			–	20	19		20	20	–	(0)			SPARE
SPARE		(0)		–	20	21		22	20	–		(0)		SPARE
SPARE			(0)	–	20	23		24	–	–			(0)	SPACE
SPARE	(0)			–	20	25		26	20	–	(0)			SPARE
SPARE		(0)		–	20	27		28	20	–		(0)		SPARE
SPARE			(0)	–	20	29		30	20	–			(0)	SPARE

PANEL 260-1-P-3

225A, MCB, 208Y/120V, 3ø, 4W, 30 SPACE, W/ NEUTRAL AND GND BUSES
FULLY RATED FOR 22KAIC, 250V, BOLT-ON BREAKERS, NEMA 1 ENCL, SURFACE MTD

LOAD SERVED	LOAD (AMPS) A	B	C	CKT BKR KAIC	AMPS	CKT NO.	PHASE A B C	CKT NO.	CKT BKR AMPS	KAIC	LOAD (AMPS) A	B	C	LOAD SERVED
UH-1/2/3	16			–	20	1		2	20	–	16			UH-4/5/6
UH-7/8/9		16		–	20	3		4	50	–		(0)		AIR COMPRESSOR *
UH-10			6	–	20	5		6					(0)	
	4.8					7		8			4.8			
EF-5 (TYP. OF 3)		4.8		–	20	9		10	20	22		4.8		EF-5 (TYP. OF 3)
			4.8			11		12					4.8	
	4.8					13		14	20	22	(0)			O-2A *
EF-5 (TYP. OF 3)		4.8		–	20	15		16	20	22		(0)		O-2A *
			4.8			17		18	20	22			(0)	SPARE
SPARE	(0)			–	20	19		20	20	22	(0)			SPARE
SPARE		(0)		–	20	21		22	20	22		(0)		SPARE
SPARE			(0)	–	20	23		24	20	22			(0)	SPARE
SPARE	(0)			–	20	25		26	20	22	(0)			SPARE
SPARE		(0)		–	20	27		28	20	22		(0)		SPARE
SPARE			(0)	–	20	29		30	20	22			(0)	SPARE

* NOTE: RECONNECT EXISTING CIRCUITS

PANEL 260-1-P-4

225A, MLO, 208Y/120V, 3ø, 4W, 30 SPACE, W/ NEUTRAL AND GND BUSES
FULLY RATED FOR 22KAIC, 600V, BOLT-ON BREAKERS, NEMA 1 ENCL, SURFACE MTD

LOAD SERVED	LOAD (AMPS) A	B	C	CKT BKR KAIC	AMPS	CKT NO.	PHASE A B C	CKT NO.	CKT BKR AMPS	KAIC	LOAD (AMPS) A	B	C	LOAD SERVED
UH-23/24/25	16			–	20	1		2	20	22	(0)			UH-20/21/22
UH-26/27/28		16		–	20	3		4	30	22		(0)		SECURITY LTS *
UH-29			3	–	20	5		6					(0)	
* RECEPT. BAR CODE	(0)			–	20	7		8			(0)			
FREEZE SEAL PROTECTION 18,000		(0)		–	20	9		10	20	22		(0)		ELB-1 ROLL UP DOOR SOUTH
GAL TANK #2			(0)			11		12					(0)	
SPARE	(0)			–	20	13		14	20	22	(0)			SPARE
SPARE		(0)		–	20	15		16	20	22		(0)		SPARE
* RECEPT. BELOW PANEL			(0)	–	20	17		18	20	22			(0)	RECEPT BELOW PANEL *
* RECEPT. BELOW PANEL	(0)			–	20	19		20	20	22	(0)			RECEPT BELOW PANEL *
SPARE		(0)		–	20	21		22	20	22		(0)		SPARE
SPARE			(0)	–	20	23		24	20	22			(0)	SPARE
SPARE	(0)			–	20	25		26	20	22	(0)			RECEPTS *
SPARE		(0)		–	20	27		28	20	22		(0)		RECEPTS *
SPARE			(0)	–	20	29		30	20	22			(0)	SPARE

* NOTE: RECONNECT EXISTING CIRCUITS

PANEL 260-1-P-5

225A, MCB, 208Y/120V, 3ø, 4W, 30 SPACE, W/ NEUTRAL AND GND BUSES
FULLY RATED FOR 22KAIC, 250V, BOLT-ON BREAKERS, NEMA 1 ENCL, SURFACE MTD

LOAD SERVED	LOAD (AMPS) A	B	C	CKT BKR KAIC	AMPS	CKT NO.	PHASE A B C	CKT NO.	CKT BKR AMPS	KAIC	LOAD (AMPS) A	B	C	LOAD SERVED
	(0)					1		2	20	–	(0)			BAR CODE EQ. RECEPT *
* HOT WATER HEATER		(0)		–	20	3		4	20	22		(0)		NMCI *
			(0)			5		6	20	22			(0)	EM. & EXIT *
UH-11/12/13	16			–	20	7		8	20	22	16			UH-14/15/16
UH-17/18/19		16		–	20	9		10				4.8		
			4.8			11		12	20	22			4.8	EF-5 (TYP. OF 3)
EF-5 (TYP OR 3)	4.8			–	20	13		14			4.8			
		4.8				15		16				4.8		
SPARE			(0)	–	20	17		18	20	22			4.8	EF-5 (TYP. OF 5)
SPARE	(0)			–	20	19		20			4.8			
SPARE		(0)		–	20	21		22	20	22		(0)		SPARE
SPARE			(0)	–	20	23		24	20	22			(0)	SPARE
SPARE	(0)			–	20	25		26	20	22	(0)			SPARE
SPARE		(0)		–	20	27		28	20	22		(0)		SPARE
SPACE			(0)	–	20	29		30	20	22			(0)	SPARE

* NOTE: RECONNECT EXISTING CIRCUITS

APPR | DATE | DESCRIPTION | SYM

NAVFAC

SEAL

A/E INFO

APPROVED
for RALPH DEAL 3/23/15
FOR COMMANDER NAVFAC

ACTIVITY
SATISFACTORY TO DATE 3-23-15

DES	DRW	CHK
JWM	JWM	JML

<<PM/DM>> R. M. RUSSELL
BRANCH MANAGER
ENGR DIRECTOR Ralph D. Deal
CUSTOMER

DEPARTMENT OF THE NAVY
NAVAL FACILITIES ENGINEERING COMMAND
PWD PORTSMOUTH
NAVAL FACILITIES ENGINEERING COMMAND ~ MID ATLANTIC
NORFOLK NAVAL SHIPYARD - PORTSMOUTH, VIRGINIA
NORFOLK NAVAL SHIPYARD
PORTSMOUTH, VIRGINIA

B260 EXTENSIVE REPAIRS

ELECTRICAL SCHEDULES - NEW WORK

SCALE: AS NOTED
EPROJECT NO.: 1146716
CONSTR. CONTR. NO.: N40085-15-R-0018
NAVFAC DRAWING NO.: 12682070
SHEET 116 OF 118

E-602

DRAWFORM REVISION: 10 MARCH 2009

FILE NAME: C:\Users\jerry.meade\Documents\Autocad Dwgs\B 260 Renovation Final\BLDG260-1146716-E-602.dwg LAYOUT NAME: E-602 PLOTTED: Tuesday, March 31, 2015 - 10:58am USER: jerry.meade

LIGHTING FIXTURE SCHEDULE

FIXTURE SYMBOL	STYLE NO. & TYPE	NUMBER AND TYPE OF LAMPS	VOLTAGE	MOUNTING	NOTES
A	NL-13	4-F32/T8	277	PENDANT	20% UPLIGHT APERTURE CHAIN HANGER
B	NL-9, TYPE E	4-F32/T8	277	RECESSED CEILING	NATURAL FINISH, 32 CELL ④
C	NL-11	4-F32/T8	277	SURFACE	
D	NL-31, TYPE B	42 WATT CFL	MULTI-VOLTAGE 120-277	RECESSED CEILING	①
X	NL-63	LED	277	SURFACE CEILING OR WALL AS REQD	②
E	NL-4	(2) PAR 36, 12 WATT HALOGEN	277 VAC/ 12 VDC	SURFACE - WALL OR COLUMN	③ SEE PLATE ON DWG E-604
R	EXISTING	6-54WT5HO	MULTI-VOLTAGE 120-277	SURFACE - BOTTOM OF WAREHOUSE DECK AS NOTED	SEE PLATE ON DWG E-604

① REFLECTOR TYPE - DIRECT DOWNLIGHT; SPECULAR.
REFLECTOR COLOR - CLEAR
TRIM - STEPPED WHITE

② HOUSING - DIE CAST ALUMINUM
FINISH - WHITE WITH BRUSHED ALUMINUM FACE
RED LETTERS WITH HIGH OUTPUT RED LEDS

③ 90 MINUTE NI-CAD BATTERY

④ EMERGENCY BATTERY PACK INVERTER UNIT WITH CHARGING INDICATOR LAMP AND TEST SWITCH NOTED AS NIGHT LIGHT.

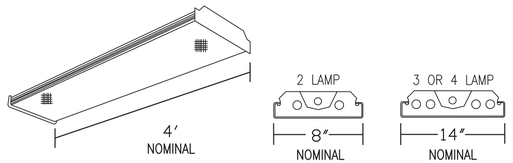

LUMINAIRE REQUIREMENTS:

1. HOUSING - DIE-FORMED, COLD-ROLLED STEEL, WITH REINFORCEMENT RIBS FOR RIGIDITY. ENDCAPS SHALL BE SAME MATERIAL AS HOUSING, SECURED WITH TABS, SCREWS OR RIVETS. FIXTURE SHALL NOT PERMANENTLY DEFORM OUT OF "SQUARE" WHEN PICKED UP FROM ANY CORNER.
2. FINISH - MULTI-STAGE PHOSPHATE BONDING TREATMENT FINISHED WITH HIGH REFLECTANCE (MINIMUM 85%), BAKED WHITE ENAMEL FINISH.
3. LENS - 100% ACRYLIC, CLEAR PRISMATIC, LINEAR SIDE PRISMS AND PYRAMIDAL BOTTOM PRISMS FOR BRIGHTNESS CONTROL AND MINIMAL LAMP IMAGING, RESPECTFULLY. LENS SHALL BE CAPABLE OF BEING HINGED FROM EITHER SIDE.
4. LAMPS - LINEAR FLUORESCENT T8, TYPICALLY WITH WATTAGES AS INDICATED. SEE LIGHTING FIXTURE SCHEDULE.
5. BALLAST - CLASS P, THERMALLY-PROTECTED, HIGH POWER FACTOR (≥.95), ELECTRONIC TYPE WITH SOUND RATING A. SEE SPECIFICATION OR LIGHTING FIXTURE SCHEDULE FOR BALLAST OPTIONS AND SPECIFICS.
6. CERTIFICATION - UL LISTED AND LABELED.
7. PHOTOMETRICS - MINIMUM VALUE OF COEFFICIENT OF UTILIZATION (CU) AND EFFICIENCY, GIVEN INTERIOR CAVITY REFLECTANCES OF 80-50-20: 54, EFFICIENCY = 76%

⚠ FLUORESCENT WRAPAROUND - UTILITY AREAS

REVISED:	AUGUST 2004	LIGHTING PLATE:	NL-11

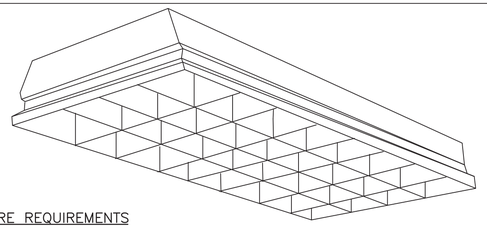

LUMINAIRE REQUIREMENTS

1. HOUSING SHALL BE MINIMUM 0.026" THICK STEEL. HOUSING SHALL BE CHEMICALLY TREATED FOR RUST PREVENTION AND PAINT ADHESION. ENDS SHALL BE SECURED WITH SCREWS OR WELDED. HOUSING SHALL BE COMPLETELY PAINTED AFTER FABRICATION WITH MINIMUM 85% REFLECTANCE WHITE ENAMEL. MINIMUM DEPTH OF HOUSING 7" ± 1". MINIMUM DEPTH OF LOUVER SHALL BE 3".
2. LUMINAIRE SHALL HAVE FULL MATTE BLACK REVEAL FOR FLOATING DOOR EFFECT. PROVIDE MOUNTING TRIM AND HARDWARE COMPATIBLE WITH CEILING MATERIAL.
3. LUMINAIRE SHALL BE HIGH EFFICIENCY, LOW BRIGHTNESS TYPE WITH INTERLOCKED LOUVERS CONTOURED TO A PARABOLIC SHAPE. LOUVERS SHALL BE OF MINIMUM 0.0235" SEMI-SPECULAR ANODIZED ALUMINUM IN NATURAL OR GOLD FINISH AS INDICATED.
4. FIXTURE HOUSING SHALL HAVE INTERNAL GREEN GROUNDING SCREW.
5. NO EXPOSED INTERNAL WIRING.
6. BALLAST SHALL BE HIGH POWER FACTOR (≥ .95) INSTANT START CLASS P ELECTRONIC BALLAST WITH SOUND RATING OF "A". SECURE BALLAST TO HOUSING WITH AT LEAST ONE SCREW AND SLIP-ON BRACKET OR 2 SCREWS, ONE AT EACH END.
7. LOUVER SHALL BE SUITABLE FOR HINGING FROM EITHER SIDE AND SHALL HAVE TWO SAFETY HINGES AND TWO SPRING LOADED LATCHES OR FOUR SPRING LOADED LATCHES.

LAMP TYPES

TYPE A - 2'X2' - 2 F40/T5 LONG TWIN TUBE LAMPS - 9, 12 OR 16 CELLS.
TYPE B - 2'X2' - 3 F40/T5 LONG TWIN TUBE LAMPS - 9, 12 OR 16 CELLS.
TYPE C - 2'X4' - 2 F32/T8 LAMPS - 12, 16, 24 OR 32 CELLS NOTE
TYPE D - 2'X4' - 3 F32/T8 LAMPS - 18, 24 OR 27 CELLS
TYPE E - 2'X4' - 4 F32/T8 LAMPS - 12, 24 OR 32 CELLS

INDICATE FINISH AND NO. OF CELLS.

⚠ PARABOLIC TROFFERS 2' X 4'

SKETCH DATE	JUNE 2002	STYLE	NL-9

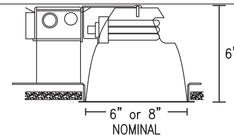

LUMINAIRE REQUIREMENTS:

1. HOUSING - ONE-PIECE, DIE-STAMPED, COLD ROLLED STEEL OR ACRYLIC-ENAMELED ALUMINUM. PROVIDE WITH PRE-WIRED JUNCTION BOX HAVING SNAP-ON ACCESS COVER. ACCESS TO JUNCTION BOX FROM BELOW CEILING SHALL BE PROVIDED THROUGH FIXTURE AFTER REMOVAL OF REFLECTOR.
2. REFLECTOR AND TRIM - ONE-PIECE, CLEAR, SPUN ALUMINUM, IRIDESCENCE-SUPRESSED, WITH PAINTED WHITE SELF TRIM. OTHER FINISHES AND TYPES AVAILABLE. SEE LIGHTING FIXTURE SCHEDULE.
3. BALLAST - CLASS P, MULTI-VOLT (120V-277V INPUT), HIGH POWER FACTOR (≥.95), PROGRAMMED RAPID START ELECTRONIC TYPE WITH ≤10% TOTAL HARMONIC DISTORTION. BALLAST SHALL BE CAPABLE OF UNIVERSALLY OPERATING 26W, 32W, OR 42 WATT LAMPS.
4. LAMPS - MULTI-TUBE, COMPACT FLUORESCENT WITH 4-PIN BASE. PROVIDE WITH WATTAGES AS INDICATED. SEE LIGHTING FIXTURE SCHEDULE.
5. CERTIFICATION - UL LISTED AND LABELED.
6. FIXTURE TYPES -
   TYPE A - 6" NOMINAL APERTURE
   TYPE B - 8" NOMINAL APERTURE
7. OPTIONS -
   REFLECTOR TYPE - DIRECT DOWNLIGHT OR WALL WASH; SEMI-SPECULAR OR SPECULAR.
   REFLECTOR COLOR - CLEAR, CHAMPAGNE, PEWTER, WHEAT, GOLD OR BRONZE.
   TRIM - OPEN REFLECTOR, STEPPED WHITE OR BLACK BAFFLE.

⚠ RECESSED COMPACT FLUORESCENT DOWNLIGHT

REVISED:	AUGUST 2004	LIGHTING PLATE:	NL-31

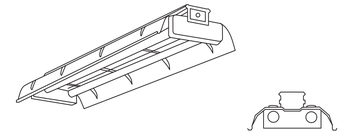

LUMINAIRE REQUIREMENTS:

1. HOUSING - DIE-FORMED, COLD-ROLLED STEEL, WITH REINFORCEMENT RIBS FOR RIGIDITY. ENDCAPS SECURED WITH TABS, SCREWS OR RIVETS. FIXTURE SHALL NOT PERMANENTLY DEFORM OUT OF "SQUARE" WHEN PICKED UP FROM ANY CORNER.
2. FINISH - MULTI-STAGE PHOSPHATE BONDING TREATMENT FINISHED WITH HIGH REFLECTANCE (MINIMUM 85%), BAKED WHITE ENAMEL FINISH.
3. LAMPHOLDERS- PRESSURE-LOCKED TYPE ENCLOSED IN TURRET HOUSING.
4. REFLECTOR - DIE-FORMED, COLD-ROLLED STEEL WITH TRANSVERSE RIBS FOR RIGIDITY. SOLID, 10% UPLIGHT APERATURE OR 20% UPLIGHT APERATURE AS INDICATED IN LIGHTING FIXTURE SCHEDULE.
5. LAMPS - LINEAR FLUORESCENT T8, TYPICALLY WITH WATTAGES AS INDICATED. SEE LIGHTING FIXTURE SCHEDULE.
6. BALLAST - CLASS P, THERMALLY-PROTECTED, HIGH POWER FACTOR (≥.95), ELECTRONIC TYPE WITH SOUND RATING A. SEE SPECIFICATION OR LIGHTING FIXTURE SCHEDULE FOR BALLAST OPTIONS AND SPECIFICS.
7. CERTIFICATION - UL LISTED AND LABELED.
8. OPTIONS - CHAIN HANGER AND PLATED STEEL WIRE GUARD.

⚠ INDUSTRIAL FLUORESCENT

REVISED:	AUGUST 2004	LIGHTING PLATE:	NL-13

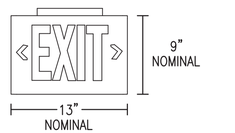

LUMINAIRE REQUIREMENTS:

1. HOUSING - DIE-CAST ALUMINUM OR HIGH-IMPACT, UV-STABILIZED, INJECTION-MOLDED THERMOPLASTIC. SINGLE OR DOUBLE-FACED AS INDICATED.
2. FINISH (ON CAST ALUMINUM HOUSING ONLY) - TEXTURED POWDER COAT FINISH OPTIONS INCLUDE WHITE, WHITE WITH BRUSHED ALUMINUM FACE, BLACK, OR BLACK WITH BRUSHED ALUMINUM FACE.
3. LETTERS/CHEVRONS - MINIMUM 6" HIGH WITH 3/4" STROKE. RED OR GREEN LETTERS AS INDICATED. PROVIDE CHEVRONS AS INDICATED EITHER LEFT, RIGHT OR BOTH DIRECTIONS AS INDICATED. CHEVRONS PUNCHED OUT THROUGH HOUSING AS REQUIRED.
4. EMERGENCY PACK - SOLID-STATE, CONSTANT-CURRENT TYPE BATTERY CHARGER WITH MAINTENANCE-FREE, NICKEL-CADMIUM BATTERY, AC-ON INDICATOR LAMP AND TEST SWITCH.
5. MOUNTING - UNIVERSAL MOUNTING KIT FOR CEILING, WALL OR END-OF-FIXTURE MOUNTING.
6. ILLUMINATION - PROVIDED BY RED, GREEN OR WHITE HIGH-OUTPUT LEDS INSIDE OF FIXTURE HOUSING. PROVIDE POLYSTYRENE DIFFUSER IN COLOR INDICATED WITH FREQUENCY-MATCHED SILKSCREEN COATING FOR MAXIMUM LED LIGHT OUTPUT.
7. CERTIFICATION - UL LISTED AND CERTIFIED FOR DAMP LOCATIONS.

⚠ LED EXIT SIGN

REVISED:	AUGUST 2004	LIGHTING PLATE:	NL-63

APPR | DATE | DESCRIPTION | SYM

NAVFAC

SEAL

A/E INFO

APPROVED
FOR COMMANDER NAVFAC 3/2/15

ACTIVITY
SATISFACTORY TO DATE 3-23-15

DES	JWM	DRW	JWM	CHK	JML
<<PM/DM>>	R. M. RUSSELL				
BRANCH MANAGER					
ENGR DIRECTOR	Ralph D. Deal				
CUSTOMER					

DEPARTMENT OF THE NAVY
NAVAL FACILITIES ENGINEERING COMMAND
PWD PORTSMOUTH

NAVAL FACILITIES ENGINEERING COMMAND - MID ATLANTIC
NORFOLK NAVAL SHIPYARD - PORTSMOUTH, VIRGINIA

NORFOLK NAVAL SHIPYARD
PORTSMOUTH, VIRGINIA

B260 EXTENSIVE REPAIRS

ELECTRICAL SCHEDULES - NEW WORK

SCALE:	AS NOTED
EPROJECT NO.:	1146716
CONSTR. CONTR. NO.	N40085-15-R-0018
NAVFAC DRAWING NO.	12682071
SHEET	117 OF 118

E-603

DRAWFORM REVISION: 10 MARCH 2009

FILE NAME: C:\Users\jerry.meade\Documents\Autocad Dwgs\B 260 Renovation Final\BJ0260-1146716-E-603.dwg LAYOUT NAME: E-603 PLOTTED: Monday, March 30, 2015 - 4:10pm USER: jerry.meade

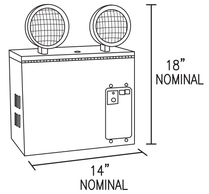

LUMINAIRE REQUIREMENTS:

1. HOUSING – HEAVY–GAUGE STEEL WITH BAKED–ON DARK BROWN ENAMEL FINISH. ACCESS INTO TOP OF FIXTURE BY FULL PIANO HINGE COVER. NON–METALLIC HOUSING OPTIONAL AS INDICATED.
2. INTERNAL COMPONENTS – FULLY AUTOMATIC, SOLID STATE, CONSTANT VOLTAGE, CURRENT–LIMITED BATTERY CHARGER; MAINTENANCE–FREE LEAD–ACID BATTERY; AND BUILT–IN OVERLOAD PROTECTION;.
3. FACEPLATE INDICATORS – LED AC–ON INDICATOR AND INTEGRAL TEST SWITCH.
4. LAMP HEADS – UL FLAME RATED THERMOPLASTIC; FULLY ADJUSTABLE HORIZONTALLY AND VERTICALLY. SEALED BEAM, PAR 36 HALOGEN LAMPS SHALL BE 12 WATTS OR AS INDICATED IN LIGHTING FIXTURE SCHEDULE.
5. MOUNTING – DIRECTLY TO WALL USING MOUNTING HOLES IN REAR OF CABINET, ACCESSORY WALL BRACKETS, OR MOUNTING SHELF.
6. CERTIFICATION – UL LISTED AND LABELED. COMPLIES WITH UL 924 AND NFPA 101 REQUIREMENTS.
7. OPTIONS – VOLTMETER, AMMETER, THREE–CONDUCTOR CORD SET, OR WIRE GUARD.

△E INDUSTRIAL EMERGENCY LIGHTING UNIT

REVISED: AUGUST 2004 | LIGHTING PLATE: NL–65

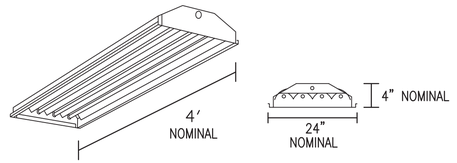

LUMINAIRE REQUIREMENTS:

1. THESE LUMINAIRES ARE EXISTING IN BUILDING 260 TO BE REMOVED, CLEANED, RELAMPED AND REINSTALLED AS SHOWN ON THE DRAWINGS. IF ANY FIXTURE MUST BE REPLACED, IT SHALL BE AS CLOSE A MATCH TO THE ORIGINAL AS POSSIBLE. THIS PLATE (NL–30) IS A CLOSE APPROXIMATION. ANY CHANGES MUST BE APPROVED BY THE GOVERNMENT REPRESENTATIVE.
2. FINISH – EXISTING REFLECTANCE (MINIMUM 85%), BAKED WHITE ENAMEL FINISH.
3. REFLECTOR – HIGHLY SPECULAR ANODIZED ALUMINUM.
4. LAMPS – LINEAR FLUORESCENT T5HO TYPICALLY, WITH WATTAGES AS INDICATED. SEE LIGHITNG FIXTURE SCHEDULE.
5. BALLAST – CLASS P, THERMALLY–PROTECTED, HIGH POWER FACTOR (≥.95), ELECTRONIC TYPE WITH SOUND RATING A. SEE SPECIFICATION OR LIGHTING FIXTURE SCHEDULE FOR BALLAST OPTIONS AND SPECIFICS.
6. CERTIFICATION – UL LISTED AND LABELED.
7. MOUNTING – SURFACE AS NOTED ON DRAWINGS.

△R EXISTING FLUORESCENT HIGH–BAY

REVISED: NA | LIGHTING PLATE: SIMILAR TO NL–30

PANEL 260–1–L–1* FED FROM PANEL "MDP"

225A, MCB, 480Y/277V, 3ø, 4W, 42 SPACE, W/ NEUTRAL AND GND BUSES
FULLY RATED FOR 25 KAIC, 600V, BOLT–ON BREAKERS, NEMA 1 ENCL, SURFACE MTD

LOAD SERVED	LOAD (AMPS) A	B	C	CKT BKR KAIC	AMPS	CKT NO.	PHASE A B C	CKT NO.	CKT BKR AMPS	KAIC	LOAD (AMPS) A	B	C	LOAD SERVED
WHSE LIGHT COL 11D – 15D	6			–	20	1		2	20	–	6			WHSE LIGHT COL 11B – 15B
WHSE LIGHT COL 11H – 15H		6		–	20	3		4	20	–		6		WHSE LIGHT COL 11A – 15A
WHSE LIGHT COL 12C – 20C			6	–	20	5		6	20	–			5	WHSE LIGHT COL 16B – 19B
ATTIC LIGHT COL 11G – 20G	5			–	20	7		8	20	–	5			WHSE LIGHT COL 16A – 19A
WHSE LIGHT COL 16D – 19H		6		–	20	9		10	20	–		(0)		WHSE LIGHT COL 11D – 15D
WHSE LIGHT COL 11G – 20G			6	–	20	11		12	20	–			5	EMER BATTERY PACKS NE
EMER BATTERY PACKS NW	5			–	20	13		14	20	–	10			OUTSIDE LIGHTING **
EXIT LIGHTING		5		–	20	15		16	20	–		6		WHSE LIGHT COL 1B – 5B
WHSE LIGHT COL 6B – 10B			6	–	20	17		18	20	–			6	WHSE LIGHT COL 1A – 5A
WHSE LIGHT COL 6A – 10A	6			–	20	19		20	20	–	5			ATTIC LIGHT COL 2G – 10G
WHSE LIGHT COL 6H – 10H		6		–	20	21		22	20	–		6		WHSE LIGHT COL 2G – 11G
WHSE LIGHT COL 2B – 10B			6	–	20	23		24	20	–			6	WHSE LIGHT COL 2C – 10C
WHSE LIGHT COL 1H – 5H	6			–	20	25		26	20	–	5			EMER BATTERY PACKS SE
EMER BATTERY PACKS SW		5		–	20	27		28	20	–		5		EMER BATTERY PACKS UTIL
SPARE			(0)	–	20	29		30	20	–			(0)	SPARE
SPARE	(0)			–	20	31		32	20	–	(0)			SPARE
SPARE		(0)		–	20	33		34	20	–		(0)		SPARE
SPARE			(0)	–	20	35		36	20	–			(0)	SPARE
CLEAN ROOM	7			–	20	37		38	20	–	10			BREAK ROOM
OFFICE AND LOCKER ROOM		10		–	20	39		40	20	–		10		ALCOVE LIGHTING
ELECTRICAL AND PUMP ROOM			5	–	20	41		42	20	–			5	WELDING ROOM

* ALSO SHOWN AS PANEL L1 ON HOME RUNS

PANEL 260–1–P–6

225A, MCB, 208Y/120V, 3ø, 4W, 30 SPACE, W/ NEUTRAL AND GND BUSES
FULLY RATED FOR xxKAIC, 600V, BOLT–ON BREAKERS, NEMA 1 ENCL, SURFACE MTD

LOAD SERVED	LOAD (AMPS) A	B	C	CKT BKR KAIC	AMPS	CKT NO.	PHASE A B C	CKT NO.	CKT BKR AMPS	KAIC	LOAD (AMPS) A	B	C	LOAD SERVED
	32					1		2	20	–	(0)			TURNSTILE GATE "H" *
* WEST WING BATTERY CHARGER		32		–	45	3		4	20	–		(0)		EM. LTS (BATTERY PACK)
			32			5		6	20	–			16	UH–30/31/32
* EYE WASH FREEZE PROTECTION	(0)			–	20	7		8	20	–	16			UH–33/34/35
AHU–3		4		–	20	9		10	20	–		16		UH–36/37/38
			4			11		12					(0)	
CU–3	16			–	35	13		14	20	–	(0)			ELB–2 ROLL UP DOOR NORTH
		16				15		16				(0)		
SPARE			(0)	–	20	17		18	20	–			(0)	SPARE
SPARE	(0)			–	20	19		20	20	–	(0)			SPARE
SPARE		(0)		–	20	21		22	20	–		(0)		SPARE
SPARE			(0)	–	20	23		24	20	–			(0)	SPARE
SPARE	(0)			–	20	25		26	20	–	(0)			SPARE
SPARE		(0)		–	20	27		28	20	–		(0)		SPARE
SPARE			(0)	–	20	29		30	20	–			(0)	SPARE

* NOTE: RECONNECT EXISTING CIRCUITS

NO.	DESCRIPTION	DATE	APPR

NAVFAC

SEAL

A/E INFO

APPROVED
FOR RALPH DEAL 3/2/15
FOR COMMANDER NAVFAC

ACTIVITY
SATISFACTORY TO DATE 3-23-15

DES JWM | DRW JWM | CHK JML

<CPM/DM> R. M. RUSSELL

BRANCH MANAGER

ENGR DIRECTOR Ralph D. Deal

CUSTOMER

DEPARTMENT OF THE NAVY
NAVAL FACILITIES ENGINEERING COMMAND
PWD PORTSMOUTH

NAVAL FACILITIES ENGINEERING COMMAND – MID ATLANTIC
NORFOLK NAVAL SHIPYARD – PORTSMOUTH, VIRGINIA

NORFOLK NAVAL SHIPYARD
PORTSMOUTH, VIRGINIA

B260 EXTENSIVE REPAIRS

ELECTRICAL SCHEDULES NEW WORK

SCALE: AS NOTED
EPROJECT NO.: 1146716
CONSTR. CONTR. NO. N40085–15–R–0018
NAVFAC DRAWING NO. 12682072
SHEET 118 OF 118

E-604

DRAWFORM REVISION: 10 MARCH 2009

FILE NAME: C:\Users\jerry.meade\Documents\Autocad Dwgs\B 260 Renovation Final\BLD260–1146716–E–604.dwg LAYOUT NAME: E–604 PLOTTED: Monday, March 30, 2015 – 5:01pm USER: jerry.meade