NAVFAC MID-LANT

WORK ORDER NO. 1302502

CONTRACT NO. TBD

P-1515 Replace and Alter Fuel Distribution Facilities (Contract A)

At the

DFSP Craney Island, Virginia

Installation ID #N62688

PREPARED BY:
Burns & McDonnell
9400 Ward Parkway
Kansas City, Missouri, 64114

A/E Contract Number: N62583-10-D-0409 WE01

Architectural:	Erik Velazquez	Mechanical:	Janelle Burd
Civil:	Craig Burchett	Electrical:	Derrick Bachtel
Structural:	A. Hassan Sahudin	Geotechnical:	R. Allen Abbott
Cathodic Prot:	Eric Shadle	Environmental	Matt Shanahan

Submitted By: Date: 12/08/2014

APPROVED BY:

Specifications:

For Commander, NAVFAC:
Date: 1/30/15

UNCLASSIFIED/FOR OFFICIAL USE ONLY

PROJECT TABLE OF CONTENTS

DIVISION 00 - PROCUREMENT AND CONTRACTING REQUIREMENTS

00 01 15 LIST OF DRAWINGS
00 22 13.00 20 SUPPLEMENTARY INSTRUCTIONS TO OFFERORS

DIVISION 01 - GENERAL REQUIREMENTS

01 11 00 SUMMARY OF WORK
01 14 00 WORK RESTRICTIONS
01 20 00.00 20 PRICE AND PAYMENT PROCEDURES
01 30 00 ADMINISTRATIVE REQUIREMENTS
01 32 17.00 20 NETWORK ANALYSIS SCHEDULES (NAS)
01 33 00 SUBMITTAL PROCEDURES
01 33 29.00 20 SUSTAINABLE REQUIREMENTS
01 35 26 GOVERNMENTAL SAFETY REQUIREMENTS
01 35 40.00 20 ENVIRONMENTAL MANAGEMENT
01 42 00 SOURCES FOR REFERENCE PUBLICATIONS
01 45 00.00 20 QUALITY CONTROL
01 45 35 SPECIAL INSPECTIONS
01 50 00 TEMPORARY CONSTRUCTION FACILITIES AND CONTROLS
01 57 19.00 20 TEMPORARY ENVIRONMENTAL CONTROLS
01 57 20.00 10 ENVIRONMENTAL PROTECTION
01 57 23 TEMPORARY STORM WATER POLLUTION CONTROL
01 58 00 PROJECT IDENTIFICATION
01 62 35 RECYCLED/RECOVERED/BIOBASED MATERIALS
01 74 19 CONSTRUCTION AND DEMOLITION WASTE MANAGEMENT
01 78 00 CLOSEOUT SUBMITTALS
01 78 23 OPERATION AND MAINTENANCE DATA

DIVISION 02 - EXISTING CONDITIONS

02 41 00 DEMOLITION
02 61 13 EXCAVATION AND HANDLING OF CONTAMINATED MATERIAL
02 82 33.13 20 REMOVAL/CONTROL AND DISPOSAL OF PAINT WITH LEAD
02 84 16 HANDLING OF LIGHTING BALLASTS AND LAMPS CONTAINING PCBs AND MERCURY

DIVISION 03 - CONCRETE

03 30 00 CAST-IN-PLACE CONCRETE
03 52 17 CAST-IN-PLACE LOW-DENSITY CELLULAR CONCRETE

DIVISION 05 - METALS

05 12 00 STRUCTURAL STEEL
05 30 10 LONG-SPAN ROOF DECKS
05 50 13 MISCELLANEOUS METAL FABRICATIONS
05 56 00 FALL ARRESTOR SYSTEM

DIVISION 07 - THERMAL AND MOISTURE PROTECTION

07 11 13 BITUMINOUS DAMPPROOFING
07 14 00 FLUID-APPLIED WATERPROOFING
07 60 00 FLASHING AND SHEET METAL
07 61 14.00 20 STEEL STANDING SEAM ROOFING
07 92 00 JOINT SEALANTS

DIVISION 09 - FINISHES

09 90 00 PAINTS AND COATINGS
09 97 13.15 REPAIR OF EPOXY/FLUOROPOLYURETHANE INTERIOR COATING OF WELDED STEEL PETROLEUM FUEL TANKS
09 97 13.17 THREE COAT EPOXY INTERIOR COATING OF WELDED STEEL PETROLEUM FUEL TANKS
09 97 13.27 EXTERIOR COATING OF STEEL STRUCTURES

DIVISION 10 - SPECIALTIES

10 44 16 FIRE EXTINGUISHERS

DIVISION 13 - SPECIAL CONSTRUCTION

13 34 23 PREASSEMBLED ENCLOSURE
13 48 00.00 10 SEISMIC PROTECTION FOR MECHANICAL EQUIPMENT
13 48 00 SEISMIC PROTECTION FOR MISCELLANEOUS EQUIPMENT

DIVISION 26 - ELECTRICAL

26 00 00.00 20 BASIC ELECTRICAL MATERIALS AND METHODS
26 05 48.00 10 SEISMIC PROTECTION FOR ELECTRICAL EQUIPMENT
26 08 00 APPARATUS INSPECTION AND TESTING
26 12 19.10 THREE-PHASE PAD-MOUNTED TRANSFORMERS
26 20 00 INTERIOR DISTRIBUTION SYSTEM
26 27 14.00 20 ELECTRICITY METERING
26 41 00.00 40 LIGHTNING PROTECTION SYSTEM
26 42 13.00 20 CATHODIC PROTECTION BY GALVANIC ANODES
26 51 00.00 40 INTERIOR LIGHTING
26 52 00.00 40 EMERGENCY LIGHTING
26 53 00.00 40 EXIT SIGNS
26 56 00 EXTERIOR LIGHTING

DIVISION 31 - EARTHWORK

31 23 00.00 20 EXCAVATION AND FILL
31 24 00 SETTLEMENT MONITORING
31 33 34 WICK DRAIN SYSTEM
31 62 13.20 PRECAST/PRESTRESSED CONCRETE PILES
31 62 99 VIBRATION MONITORING

DIVISION 32 - EXTERIOR IMPROVEMENTS

32 05 33 LANDSCAPE ESTABLISHMENT
32 11 23 AGGREGATE BASE COURSE
32 12 10 BITUMINOUS TACK AND PRIME COATS
32 12 17 HOT MIX BITUMINOUS PAVEMENT
32 17 23.00 20 PAVEMENT MARKINGS
32 92 19 SEEDING

DIVISION 33 - UTILITIES

33 08 55 COMMISSIONING OF FUEL FACILITY SYSTEMS
33 09 53.10 CONTROL AND TANK LEVEL PANELS
33 11 00 WATER DISTRIBUTION
33 40 00 STORM DRAINAGE AND CONTAINMENT DRAINAGE
33 52 43.14 CONTROL VALVES, FUEL SYSTEMS
33 52 43.23 AVIATION FUEL PUMPS

33 52 43 FUEL DISTRIBUTION
33 52 80 LIQUID FUELS PIPELINE COATING SYSTEMS
33 52 90.00 20 WELDING FOR POL SERVICE PIPING
33 56 10 FACTORY-FABRICATED FUEL STORAGE TANKS
33 56 13.13 ALTERATIONS TO STEEL TANKS WITH FIXED ROOFS
33 57 00.10 MARINE LOADING ARMS TAKEDOWN, STORAGE AND REINSTALLATION
33 57 00.20 NEW MARINE LOADING ARMS
33 57 00 BULK FUEL RECEIVING/DISPENSING EQUIPMENT
33 65 00 CLEANING PETROLEUM STORAGE TANKS
33 71 02 UNDERGROUND ELECTRICAL DISTRIBUTION

-- End of Project Table of Contents --

SPECIFICATIONS CERTIFICATIONS

Alan McClanahan
DIVISION 00
SECTIONS 01 11 00
thru 01 78 00
SECTIONS 02 61 13
thru 02 84 16

Craig Burchett - Civil
SECTION 0157 23
SECTION 02 41 00
SECTION 31 23 00.00 20
DIVISION 32
SECTIONS 33 11 00 & 33 40 00

R. Allen Abbott - Geotechnical
SECTION 31 24 00
thru 31 62 99

Hassan Sahudin - Structural
SECTION 01 45 35
DIVISIONS 03 & 05
SECTION 07 11 13
thru 07 14 00
SECTION 13 48 00.00 1

Erik Velazquez - Architectural
SECTION 07 60 00
thru 07 92 00
SECTION 09 90 00
SECTION 13 34 23

Janelle Burd - Mechanical
SECTION 01 78 23
SECTION 09 97 13.15
thru 10 44 16
SECTION 13 48 00.00 10

Derrick Bachtel - Electrical
DIVISIONS 26
SECTION 33 71 02.00 20

Eric Shadle - Cathodic Protection
SECTION 26 42 13.00 20

DOCUMENT 00 01 15

LIST OF DRAWINGS
02/11

PART 1 GENERAL

1.1 SUMMARY

This section lists the drawings for the project pursuant to contract clause "DFARS 252.236-7001, Contract Drawings, Maps and Specifications."

1.2 CONTRACT DRAWINGS

Contract drawings are included per the list included at the end of this Section.

1.3 SUPPLEMENTARY DRAWINGS

These supplementary drawings may not be a part of the contract but are included with the drawings for information.

1.3.1 Reference Drawings

The reference drawings included per the list at the end of this Section are intended only to show the original construction. Drawings are the property of the Government and shall not be used for any purpose other than that intended by the contract. The drawings are intended to depict general conditions only and cannot be relied on for specific detail or actual current conditions.

1.3.2 Boring Logs

The Government does not guarantee that borings indicate actual conditions, except for the locations and the time that they were made.

-- End of Document --

SECTION 00 01 15

LIST OF DRAWINGS

DWG#	NAVFAC#	/ DRAWING TITLE
GENERAL		
G-001	12682097	COVER SHEET
G-002	12682098	INDEX SHEET - 1
G-003	12682099	INDEX SHEET - 2
G-010	12682100	OVERALL DFSP CRANEY ISLAND MAP
G-011	12682101	CONSTRUCTION LAYDOWN AREAS
G-012	12682102	PROJECT SEQUENCING PLAN
G-100	12682103	SURVEY CONTROLS
G-101	12682104	EXISTING CONDITIONS PLAN - 1
G-102	12682105	EXISTING CONDITIONS PLAN - 2
G-103	12682106	EXISTING CONDITIONS PLAN - 3
G-104	12682107	EXISTING CONDITIONS PLAN - 4
G-105	12682108	EXISTING CONDITIONS PLAN - 5
G-106	12682109	EXISTING CONDITIONS PLAN - 6
G-107	12682110	EXISTING CONDITIONS PLAN - 7
G-108	12682111	EXISTING CONDITIONS PLAN - 8
G-109	12682112	EXISTING CONDITIONS PLAN - 9
G-110	12682113	EXISTING CONDITIONS PLAN - 10
G-111	12682114	EXISTING CONDITIONS PLAN - 11
G-112	12682115	EXISTING CONDITIONS PLAN - 12
G-113	12682116	EXISTING CONDITIONS PLAN - 13
G-114	12682117	EXISTING CONDITIONS PLAN - 14
G-115	12682118	EXISTING CONDITIONS PLAN - 15
GEOTECHNICAL		
B-001	12682119	SOIL BORING LOCATION PLAN
B-002	12682120	SOIL BORING LEGEND AND RESULTS SUMMARY
B-011	12682121	SOIL BORING LOGS - 1
B-012	12682122	SOIL BORING LOGS - 2
B-013	12682123	SOIL BORING LOGS - 3
B-014	12682124	SOIL BORING LOGS - 4
B-015	12682125	SOIL BORING LOGS - 5
B-020	12682126	SURCHARGE PLAN - NEW TRUCK FILLSTAND
B-021	12682127	SURCHARGE PLAN - CROSS SECTION
B-501	12682128	SURCHARGE PLAN DETAILS
DEMOLITION		
D-100	12682129	OVERALL SITE DEMOLITION PLAN
D-101	12682130	DEMOLITION PLAN - NEW TRUCK FILLSTAND SITE
D-102	12682131	DEMOLITION PLAN - MAINTENANCE ROAD AND ACCESS ROAD A PIPE TRENCHES
D-103	12682132	DEMOLITION PLAN - OCEAN ROAD PIPE TRENCH
D-104	12682133	DEMOLITION PLAN - PIER C PIPE TRENCH
D-105	12682134	DEMOLITION PLAN - EXISTING TRUCK FILLSTAND
D-150	12682135	DEMOLITION PHOTO SHEET - EXISTING TRUCK FILLSTAND - 1
D-151	12682136	DEMOLITION PHOTO SHEET - EXISTING TRUCK FILLSTAND - 2
D-160	12682137	DEMOLITION PLAN - 40 SERIES TANKS
D-161	12682138	DEMOLITION PHOTO SHEET - 40 SERIES TANKS
CIVIL		
C-001	12682139	CIVIL LEGEND AND ABBREVIATIONS
C-002	12682140	OVERALL SITE PLAN AND GENERAL NOTES
C-003	12682141	EROSION CONTROL PLAN
C-004	12682142	EROSION CONTROL NOTES
C-100	12682143	SITE PLAN - NEW TRUCK FILLSTAND

DWG#	NAVFAC#	/ DRAWING TITLE
C-101	12682144	GRADING PLAN - NEW TRUCK FILLSTAND
C-102	12682145	UTILITY PLAN - NEW TRUCK FILLSTAND
C-103	12682146	ENLARGEMENT PLAN - NEW TRUCK FILLSTAND
C-104	12682147	STORMWATER BMP PLAN - NEW TRUCK FILLSTAND
C-110	12682148	SITE AND GRADING PLAN - F-24 TIE-IN STATION
C-111	12682149	SITE AND GRADING PLAN - MAINTENANCE ROAD AND ACCESS ROAD A PIPE TRENCHES
C-112	12682150	SITE AND GRADING PLAN - OCEAN ROAD PIPE TRENCH
C-113	12682151	SITE PLAN - PIER C PIPE TRENCH
C-114	12682152	GRADING PLAN - PIER C PIPE TRENCH
C-115	12682153	UTILITY PLAN - PIER C PIPE TRENCH
C-116	12682154	MARKING AND PROFILE PLAN - PIER C PIPE TRENCH
C-300	12682155	UTILITY PROFILE SHEET - 1
C-301	12682156	UTILITY PROFILE SHEET - 2
C-302	12682157	UTILITY PROFILE SHEET - 3
C-501	12682158	CIVIL DETAILS - 1
C-502	12682159	CIVIL DETAILS - 2
C-503	12682160	CIVIL DETAILS - 3
C-504	12682161	CIVIL DETAILS - 4
C-505	12682162	CIVIL DETAILS - 5
C-506	12682163	CIVIL DETAILS - 6
C-507	12682164	CIVIL DETAILS - 7
C-508	12682165	CIVIL DETAILS - 8

ARCHITECTURAL

A-001	12682166	ARCHITECTURAL SYMBOLS, LEGEND, AND GENERAL NOTES
A-100	12682167	OPERATOR'S ENCLOSURE - PLANS AND ELEVATIONS

STRUCTURAL

S-001	12682168	STRUCTURAL GENERAL NOTES AND ABBREVIATIONS
S-002	12682169	STATEMENT OF INSPECTIONS - SHEET 1
S-003	12682170	STATEMENT OF INSPECTIONS - SHEET 2
S-004	12682171	OVERALL STRUCTURAL LAYOUT PLAN
S-101	12682172	F-24 TIE-IN STATION - PILE AND SLAB PLANS
S-102	12682173	F-24 TIE-IN STATION - CANOPY FRAMING PLAN
S-103	12682174	TRUCK FILLSTAND - SLAB PLAN
S-104	12682175	TRUCK FILLSTAND - CANOPY FRAMING PLAN
S-105	12682176	JP-5 DAY TANK CONTAINMENT - PILE PLAN
S-105A	12682177	ADDITIVE TANK CONTAINMENT - PILE PLAN
S-106	12682178	JP-5 DAY TANK CONTAINMENT - SLAB PLAN
S-106A	12682179	ADDITIVE TANK CONTAINMENT - SLAB PLAN
S-107	12682180	ADDITIVE INJECTOR PAD - PILE AND SLAB PLANS
S-108	12682181	F-24 METER STATION - PILE AND SLAB PLAN
S-109	12682182	F-24 METER STATION - CANOPY FRAMING PLAN
S-110	12682183	PIPE TRENCH - MAINTENANCE ROAD - PLANS
S-111	12682184	PIPE TRENCH - MAINTENANCE ROAD - SECTIONS
S-112	12682185	PIPE TRENCH - ACCESS ROAD A - PLANS
S-113	12682186	PIPE TRENCH - ACCESS ROAD A - SECTIONS
S-114	12682187	PIPE TRENCH - OCEAN ROAD - PLANS
S-115	12682188	PIPE TRENCH - OCEAN ROAD - SECTIONS
S-116	12682189	PIPE TRENCH - PIER C - PILE PLAN
S-117	12682190	PIPE TRENCH - PIER C - BASE SLAB PLAN
S-118	12682191	PIPE TRENCH - PIER C - UPPER SLAB/GRATING PLAN
S-119	12682192	PIPE TRENCH - PIER C - SECTIONS
S-120	12682193	PIER D EQUIPMENT PAD - PILE AND SLAB PLANS
S-121	12682194	OPERATOR'S ENCLOSURE - SLAB PLAN
S-122	12682195	STRIPPER PUMP CANOPY
S-123	12682196	PIER C - SLAB PLAN
S-124	12682197	PIER C - PLATFORM FRAMING PLAN AND SECTIONS
S-201	12682198	F-24 TIE-IN STATION - ELEVATIONS AND SECTIONS
S-202	12682199	F-24 METER STATION - ELEVATIONS AND SECTIONS

DWG#	NAVFAC#	/ DRAWING TITLE
S-203	12682200	TRUCK FILLSTAND - ELEVATIONS AND SECTIONS - SHEET 1
S-204	12682201	TRUCK FILLSTAND - ELEVATIONS AND SECTIONS - SHEET 2
S-301	12682202	PIER C - LOAD ARM PLATFORM SECTIONS
S-501	12682203	STANDARD STRUCTURAL DETAILS - SHEET 1
S-502	12682204	STANDARD STRUCTURAL DETAILS - SHEET 2
S-503	12682205	STANDARD STRUCTURAL DETAILS - SHEET 3
S-511	12682206	FOUNDATION DETAILS - SHEET 1
S-512	12682207	FOUNDATION DETAILS - SHEET 2
S-513	12682208	FOUNDATION DETAILS - SHEET 3
S-514	12682209	FOUNDATION DETAILS - SHEET 4
S-515	12682210	FOUNDATION DETAILS - SHEET 5
S-521	12682211	STEEL FRAMING DETAILS - SHEET 1
S-522	12682212	STEEL FRAMING DETAILS - SHEET 2
S-523	12682213	STEEL FRAMING DETAILS - SHEET 3
S-531	12682214	PLATFORMS AND STAIRS - SHEET 1
S-532	12682215	PLATFORMS AND STAIRS - SHEET 2
S-533	12682216	PLATFORMS AND STAIRS - SHEET 3
S-534	12682217	PLATFORMS AND STAIRS - SHEET 4
S-535	12682218	PLATFORMS AND STAIRS - SHEET 5
S-551	12682219	PIPE SUPPORT DETAILS - SHEET 1
S-552	12682220	PIPE SUPPORT DETAILS - SHEET 2
S-553	12682221	PIPE SUPPORT DETAILS - SHEET 3
S-554	12682222	PIPE SUPPORT DETAILS - SHEET 4
S-555	12682223	PIPE SUPPORT DETAILS - SHEET 5
S-556	12682224	PIPE SUPPORT DETAILS - SHEET 6
S-557	12682225	PIPE SUPPORT DETAILS - SHEET 7
S-558	12682226	PIPE SUPPORT DETAILS - SHEET 8

MECHANICAL

M-001	12682227	MECHANICAL LEGEND
M-002	12682228	MECHANICAL ABBREVIATIONS
M-003	12682229	MECHANICAL GENERAL NOTES
M-011	12682230	PIPING SCHEMATIC - OVERALL FUEL SYSTEM
M-012	12682231	PIPING SCHEMATIC - TIE-IN CONNECTION AREA
M-013	12682232	PIPING SCHEMATIC - JP-5 DAY TANKS
M-014	12682233	PIPING SCHEMATIC - PIER D
M-015	12682234	PIPING SCHEMATIC - PIER C
M-101	12682235	CRANEY ISLAND OVERALL AREA PLAN
M-102	12682236	F-24 PIPING SITE PLAN - 1
M-103	12682237	F-24 PIPING SITE PLAN - 2
M-104	12682238	F-24 PIPING SITE PLAN - 3
M-105	12682239	F-24 PIPING SITE PLAN - 4
M-105A	12682240	F-24 PIPING SITE PLAN - 4A
M-106	12682241	F-24 PIPING SITE PLAN - 5
M-107	12682242	F-24 PIPING SITE PLAN - 6
M-108	12682243	F-24 PIPING SITE PLAN - 7
M-109	12682244	F-24 PIPING SITE PLAN - 8
M-110	12682245	F-24 PIPING SITE PLAN - 9
M-111	12682246	F-24 PIPING SITE PLAN - 10
M-112	12682247	F-24 PIPING SITE PLAN - 11
M-113	12682248	F-24 PIPING SITE PLAN - 12
M-114	12682249	F-24 PIPING SITE PLAN - 13
M-115	12682250	F-24 PIPING SITE PLAN - 14
M-301	12682251	SECTIONS - F-24 TIE-IN STATION
M-302	12682252	SECTIONS - MAINTENANCE ROAD PIPE TRENCH
M-303	12682253	SECTIONS - JP-5 DAY TANKS - 1
M-304	12682254	SECTIONS - JP-5 DAY TANKS - 2
M-305	12682255	SECTIONS - ADDITIVE STORAGE TANKS
M-306	12682256	SECTIONS - ACCESS ROAD A PIPE TRENCH & ADDITIVE INJECTOR
M-307	12682257	SECTIONS - TRUCK FILLSTAND
M-308	12682258	SECTIONS - F-24 FILL TIE-IN & OCEAN ROAD PIPE TRENCH

DWG#	NAVFAC#	/ DRAWING TITLE
M-309	12682259	SECTIONS - F-24 METER STATION
M-310	12682260	SECTIONS - STRIPPER PUMP PAD
M-311	12682261	SECTIONS - PIER D SOUTH EQUIPMENT PAD
M-312	12682262	SECTIONS - PIER D SOUTH
M-401	12682263	ENLARGED PLAN - F-24 TIE-IN STATION
M-402	12682264	ENLARGED PLAN - MAINTENANCE ROAD PIPE TRENCH
M-403	12682265	ENLARGED PLAN - JP-5 DAY TANKS
M-404	12682266	ENLARGED PLAN - ADDITIVE STORAGE TANKS
M-405	12682267	ENLARGED PLAN - ADDITIVE INJECTOR
M-406	12682268	ENLARGED PLAN - TRUCK FILLSTAND WESTSIDE
M-407	12682269	ENLARGED PLAN - TRUCK FILLSTAND EASTSIDE
M-408	12682270	ENLARGED PLAN - ACCES ROAD A PIPE TRENCH
M-409	12682271	ENLARGED PLAN - F-24 FILL TIE-IN
M-410	12682272	ENLARGED PLAN - F-24 & F-76 SUCTION TIE-IN
M-411	12682273	ENLARGED PLAN - OCEAN ROAD TIE-IN
M-412	12682274	ENLARGED PLAN - OCEAN ROAD PIPE TRENCH
M-413	12682275	ENLARGED PLAN - F-24 METER STATION
M-414	12682276	ENLARGED PLAN - PIER C EQUIPMENT PAD
M-415	12682277	ENLARGED PLAN - PIER D SOUTH EQUIPMENT PAD
M-416	12682278	ENLARGED PLAN - PIER D SOUTH - 1
M-417	12682279	ENLARGED PLAN - PIER D SOUTH - 2
M-418	12682280	ENLARGED PLAN - PIER D NORTH - 1
M-419	12682281	ENLARGED PLAN - PIER D NORTH - 2
M-420	12682282	ENLARGED PLAN - PIER C - 1
M-421	12682283	ENLARGED PLAN - PIER C - 2
M-422	12682284	ENLARGED PLAN - PIER C - 3
M-423	12682285	ENLARGED PLAN - PIER C - 4
M-424	12682286	ENLARGED PLAN - PIER C - 5
M-425	12682287	ENLARGED PLAN - PIER C - 6
M-426	12682288	ENLARGED PLAN - PIER C - 7
M-427	12682289	ENLARGED PLAN - PIER C - 8
M-428	12682290	ENLARGED PLAN - PIER C - 9
M-429	12682291	ENLARGED PLAN - PIER C - 10
M-430	12682292	ENLARGED PLAN - PIER C - 11
M-501	12682293	TANK DETAILS - BULK STORAGE TANKS
M-502	12682294	TANK DETAILS - 1
M-503	12682295	TANK DETAILS - 2
M-504	12682296	TANK DETAILS - 3
M-505	12682297	EMERGENCY SPILL TANK DETAILS
M-506	12682298	MECHANICAL FUELING DETAILS - 1
M-507	12682299	MECHANICAL FUELING DETAILS - 2
M-508	12682300	CATHODIC PROTECTION ENLARGED PLAN AND DETAILS
M-601	12682301	P&ID - F-24 TIE-IN STATION
M-602	12682302	P&ID - JP-5 DAY TANKS
M-602A	12682303	P&ID - ADDITIVE STORAGE TANKS
M-603	12682304	P&ID - TRUCK FILLSTAND WESTSIDE
M-604	12682305	P&ID - TRUCK FILLSTAND EASTSIDE
M-605	12682306	P&ID - BULK F-24 STORAGE
M-606	12682307	P&ID - F-24 TRANSFER PIPING
M-607	12682308	P&ID - PIER C - 1
M-608	12682309	P&ID - PIER C - 2
M-609	12682310	P&ID - PIER D SOUTH
M-610	12682311	P&ID - PIER D NORTH
M-611	12682312	P&ID - EMERGENCY SPILL TANK
M-701	12682313	SEQUENCE OF OPERATION - 1
M-702	12682314	SEQUENCE OF OPERATION - 2
M-703	12682315	MECHANICAL EQUIPMENT SCHEDULES
M-801	12682316	PHOTOS - MISCELLANEOUS PHOTOS
M-802	12682317	PHOTOS - PIER C - 1
M-803	12682318	PHOTOS - PIER C - 2
M-804	12682319	PHOTOS - PIER C - 3

DWG#	NAVFAC#	/ DRAWING TITLE
M-805	12682320	PHOTOS - PIER C - 4
M-806	12682321	PHOTOS - PIER C - 5
M-807	12682322	PHOTOS - PIER C - 6
M-808	12682323	PHOTOS - PIER C - 7
M-809	12682324	PHOTOS - PIER C - 8
M-810	12682325	PHOTOS - PIER C - 9
M-811	12682326	PHOTOS - PIER C - 10

ELECTRICAL

E-001	12682327	ELECTRICAL LEGEND
E-010	12682328	HAZARDOUS AREA SITE PLAN
E-011	12682329	HAZARDOUS AREA PLAN - F-24 TIE-IN STATION
E-021	12682330	HAZARDOUS AREA PLAN - TRUCK FILLSTAND
E-031	12682331	HAZARDOUS AREA PLAN - METER STATION & EQUIPMENT PAD
E-041	12682332	HAZARDOUS AREA PLAN - PIER D SOUTH EQUIPMENT PAD
E-051	12682333	HAZARDOUS AREA DETAILS - 1
E-052	12682334	HAZARDOUS AREA DETAILS - 2
E-100	12682335	OVERALL ELECTRICAL SITE PLAN
E-101	12682336	F-24 TIE-IN STATION - ELECTRICAL PLAN
E-111	12682337	TRUCK FILLSTAND - ELECTRICAL PLAN
E-112	12682338	TRUCK FILLSTAND - GROUNDING PLAN
E-131	12682339	PIER C - ELECTRICAL PLAN
E-141	12682340	PIER D SOUTH - ELECTRICAL PLAN
E-151	12682341	ACCESS ROAD & OCEAN ROAD - ELECTRICAL PLANS
E-401	12682342	F-24 TIE-IN POINT - ENLARGED POWER & LIGHTING PLAN
E-402	12682343	F-24 TIE-IN POINT - ENLARGED GROUNDING & LIGHTNING PROTECTION PLAN
E-411	12682344	TRUCK FILLSTAND - ENLARGED POWER & LIGHTING PLAN
E-412	12682345	TRUCK FILLSTAND - ENLARGED GROUNDING & LIGHTNING PROTECTION PLAN
E-413	12682346	OPERATOR ENCLOSURE - ENLARGED POWER & LIGHTING PLANS
E-414	12682347	TRUCK FILLSTAND TANKS - ENLARGED ELECTRICAL PLAN
E-431	12682348	PIER C - ENLARGED ELECTRICAL PLAN
E-432	12682349	PIER C & D SOUTH EQUIPMENT PAD - ENLARGED PLANS
E-433	12682350	F-24 METER STATION - ENLARGED POWER & LIGHTING PLAN
E-434	12682351	F-24 METER STATION - ENLARGED LIGHTNING & GROUNDING PLAN
E-435	12682352	PIER C - ENLARGED PLAN
E-501	12682353	DETAILS - SITE
E-511	12682354	DETAILS - POWER
E-521	12682355	DETAILS - RACKS - 1
E-522	12682356	DETAILS - RACKS - 2
E-523	12682357	DETAILS - RACKS - 3
E-524	12682358	DETAILS - RACKS - 4
E-531	12682359	DETAILS - GROUNDING & LIGHTNING PROTECTION
E-541	12682360	DETAILS - LIGHTING
E-601	12682361	ELECTRICAL ONE-LINE DIAGRAMS
E-602	12682362	WIRING DIAGRAMS - 1
E-603	12682363	WIRING DIAGRAMS - 2
E-604	12682364	WIRING DIAGRAMS - 3
E-605	12682365	WIRING DIAGRAMS - 4
E-606	12682366	WIRING DIAGRAMS - 5
E-701	12682367	PANELBOARD SCHEDULES
E-702	12682368	LIGHT FIXTURE SCHEDULE
E-705	12682369	CIRCUIT SCHEDULES - 1
E-706	12682370	CIRCUIT SCHEDULE - 2
E-707	12682371	CIRCUIT SCHEDULE - 3
E-708	12682372	CIRCUIT SCHEDULE - 4

DWG#	NAVFAC# / DRAWING TITLE	
REFERENCE DRAWINGS		
8070-0	12682373	FISHER TANK-DRAWING LOG
8070-1A	12682374	FISHER TANK-(1) 112,052 BBL STORAGE TANK
8070-1B	12682375	FISHER TANK-SHELL ROLLOUT
8070-1C	12682376	FISHER TANK–TANK ORIENTATION
8070-4	12682377	FISHER TANK–124’-0” [37795] LAP-WELDED ROOF
8070-5A	12682378	FISHER TANK-FRAMING DETAILS (124’DIA[37795] X 51’[15545])
8070-10	12682379	FISHER TANK-MISCELLANEOUS ROOF NOZZLES
8070-12	12682380	FISHER TANK-VAREC 2500 AUTOMATIC TANK GAUGE
8070-17A	12682381	FISHER TANK-SPIRAL STAIRWAY
8070-18	12682382	FISHER TANK-360-DEG HANDRAIL–124’DIA TANK
8070-19	12682383	FISHER TANK-INTERIOR LADDER W/ SAFETY CABLE
8070-21	12682384	FISHER TANK-10” ROOF NOZZLE W/ WELL PIPE
T-1	12682385	TRUCK LOADING FACILITY-VICINITY MAP, LOCATION MAP & INDEX
M-1	12682386	TRUCK LOADING FACILITY-SITE PLAN, SCHEMATIC & DETAILS
M-2	12682387	TRUCK LOADING FACILITY-PLANS & SECTIONS
M-3	12682388	TRUCK LOADING FACILITY-PLANS, SECTIONS & DETAILS
M-4	12682389	TRUCK LOADING FACILITY-TRUCK LOADING ARMS - DETAILS
E-1	12682390	TRUCK LOADING FACILITY-ELECTRICAL PLANS & ELEVATIONS
E-2	12682391	TRUCK LOADING FACILITY-ELECTRICAL DIAGRAMS
E-701	12682392	DETAILS (MILCON P-444 PROJECT)

DOCUMENT 00 22 13.00 20

SUPPLEMENTARY INSTRUCTIONS TO OFFERORS
02/14

PART 1 GENERAL

1.1 CONTRACT LINE ITEMS

The terms Offeror and Bidder and versions thereof (offer/bid) have the same definition as used within this contract.

Provide the Contract Line Item (CLIN) lump sum price for the following items:

CLIN 0001 - BASE PRICE. Price includes the following:

CLIN 0001AA. Price for the entire work, in accordance with the drawings and specifications, but excluding work described in Contract Line Item (CLIN)0001AB, 0001AC, 0001AD, 0001AE, 0001AF, 0001AG, 0001AH, 0001AI, 0002, 0003, and 0004.

CLIN	DESCRIPTION	TOTAL PRICE FOR CLIN 0001AA
0001AA	All work associated with P-1515 Replace and Alter Fuel Distribution Facilities (Contract A), DFSP Craney Island, Virginia	$_____

CLIN 0001AB through CLIN 000AI. Unit price for foundation piling, components, testing, test piles, wick drains, oily water and sludge removal, contaminated soil disposal, and clean soil replacement, complete in accordance with drawings and specifications and in accordance with the following schedule:

CLIN	ITEM	UNIT	UNIT PRICE	NO. UNITS	TOTAL PRICE FOR CLIN 0001AB (UNIT PRICE X NO. UNITS)
0001AB	Furnish, Deliver and Drive Prestressed Concrete Piles	Linear feet	$_____	27,310	$_____

CLIN	ITEM	UNIT	UNIT PRICE	NO. UNITS	TOTAL PRICE FOR CLIN
0001AC	Pile Dynamic Testing	Each	$_____	24	$_____
0001AD	Install Prestressed Concrete Test Piles	Linear feet	$_____	1,255	$_____
0001AE	Wick Drain Installation	Linear feet	$_____	293,000	$_____
0001AF	Removal and disposal offsite of oily water and sludge inside tanks.	Gal	$_____	1,000	$_____
0001AG	Removal and disposal of contaminated stockpiled soils.	CY	$_____	25	$_____
0001AH	Provisions and compaction of fill in place of removed contaminated soil.	CY	$_____	30	$_____
0001AI	Overexcavate and remove geotechnically unsuitable subgrade soils and replace with suitable Structural Fill material as specified in Specification Section 31 23 00.00 20	CY	$_____	300	$_____

CLIN 0002 Additive Bid Option A-1 - Price includes the following:

Demolish three (3) existing 40 Series tanks (#40, #42, and #43) and all

associated abovegrade piping and equipment within the existing six (6) concrete containment cell areas as described in contract drawings and specification Section 33 65 00.

Price for adding work, as described, complete and in accordance with drawings and specification.

CLIN	DESCRIPTION	TOTAL PRICE FOR CLIN 0004
0002	Bid Option A-1: 40 Series Tank Demolition	$_____

CLIN 0003 Additive Bid Option A-2 - Price includes the following:

Purchase new and fully install three (3) fuel loading arms at Pier C, Pier D-South and Pier D-North. Bid Option includes credit for only turning over to Government three (3) existing loading arms in an "as-is" condition to a concrete pad location at DFSP Craney from DFSP Yorktown.

Clarification: BASE BID PRICE includes full dismantling, transport (two mobilizations) from DFSP Yorktown to Craney, and reconditioning three (3) existing loading arms, as well as complete installation and commissioning of three (3) loading arms at DFSP Craney (Pier C, Pier D-South, Pier D-North).

Price for adding work, as described, complete and in accordance with drawings and specifications, and in accordance with the following schedule:

CLIN	DESCRIPTION	TOTAL PRICE FOR CLIN 0003
0003	Bid Option A-2: Purchase New Loading Arms	$_____

CLIN 0004 Additive Bid Option A-3 - Price includes the following:

Purchase new and install tanks, associated foundations, equipment, pipe supports, and all piping associated with the new Corrosion Inhibitor (CI) and Static Dissipater (SDA) Fuel Additive Tank Facility, located at the new Truck Fillstand area, as identified in the contract documents. All related sitework and grading in the general vicinity of the Fuel Additive Tank Facility is considered part of the BASE BID PRICE.

Price for adding work, as described, complete and in accordance with drawings and specifications, and in accordance with the following schedule:

CLIN	DESCRIPTION	TOTAL PRICE FOR CLIN 0002
0004	Bid Option A-3: Additive Tank Facility at New Truck Fillstand Area	$_____

1.2 GENERAL BID NOTES

a. The Government reserves the unilateral right to award CLIN 0002, CLIN 0003 and CLIN 0004 to the Contractor at the proposed price within 90 calendar days after the contract award. A firm fixed proposed price is required for CLIN 0001, CLIN 0002, CLIN 0003, and CLIN 0004. No provision is made for economic price adjustment. If Options are exercised, the contract completion date remains unchanged.

b. Evaluation of Options (JUL 1990). Except when it is determined in accordance with FAR 17.206 (b) not to be in the Government's best interest, the Government will evaluate offers for award purposes by adding the price for the Option(s) to the total price for CLIN 0001. In accordance with FAR 52.217-5, evaluation of options will not obligate the Government to exercise the Option(s).

c. The Government may reject an offer as nonresponsive if it is materially unbalanced as to prices for the basic requirement and the option and additive quantities. An offer is unbalanced when it is based on prices significantly less than cost for some work and prices which are significantly overstated for other work.

PART 2 PRODUCTS

Not used.

PART 3 EXECUTION

Not used.

-- End of Document --

SECTION 01 11 00

SUMMARY OF WORK
08/11

PART 1 GENERAL

1.1 REFERENCES

The publications listed below form a part of this specification to the extent referenced. The publications are referred to within the text by the basic designation only.

ASTM INTERNATIONAL (ASTM)

ASTM E2114	(2008) Standard Terminology for Sustainability Relative to the Performance of Buildings

1.2 DEFINITIONS

Definitions pertaining to sustainable development are as defined in ASTM E2114, Section 01 35 40.00 20 ENVIRONMENTAL MANAGEMENT, Section 01 57 20.00 10 ENVIRONMENTAL PROTECTION, and as specified.

a. "Environmentally preferable products" have a lesser or reduced effect on the environment in comparison to conventional products and services. This comparison may consider raw materials acquisition, production, manufacturing, packaging, distribution, reuse, operation, maintenance, or disposal of the product.

b. "Indoor environmental quality" is the physical characteristics of the building interior that impact occupants, including air quality, illumination, acoustics, occupant control, thermal comfort, daylighting, and views.

c. "Operational performance" is the functional behavior of the building as a whole or of the building components.

d. "Sustainability" is the balance of environmental, economic, and societal considerations.

1.3 SUBMITTALS

Government approval is required for submittals with a "G" designation; submittals not having a "G" designation are for Contractor Quality Control approval. The following shall be submitted in accordance with Section 01 33 00 SUBMITTAL PROCEDURES:

SD-01 Preconstruction Submittals

Upon receipt of Government Furnished Equipment, the Contractor shall submit records in accordance with paragraph entitled, "Government Furnished Property," of this section.

Submit the following items to the Contracting Officer:

Utility Outage Requests

Utility Connection Requests
Excavation Permits
Welding Permits

1.4 WORK COVERED BY CONTRACT DOCUMENTS

1.4.1 Project Description

The work includes the repair and alteration of existing fuel storage and distribution components and associated infrastructure at DFSP Craney Island to accommodate the addition of F-24 fuel to the overall depot facility capability, as well as other incidental related work.

Infrastructure improvements include, but are not limited to the following:

a. Convert existing JP-5 bulk storage tanks #501 and #502 and associated pumping and distribution piping system to accommodate F-24 fuel.

b. Above grade pipe tie-in from multi-product Colonial pipeline source.

c. Relocate, recondition, and re-install existing JP-8 loading arms from DFSP Yorktown to Pier C and Pier D locations at DFSP Craney Island facility.

d. Construct new multiple product (JP-5, F-76, F-24) Truck Fillstand facility including new JP-5 day storage tanks, associated foundations, fuel loading & offloading equipment, fuel additive facilities, sitework improvements, containment system, etc.

e. F-24, JP-5, and F-76 above grade and below grade pipeline installation including spread/pile foundations, supports, etc.

f. Piping supply and receipt to/from piers C & D.

g. Roadway crossing pipe trench structures.

h. Demolition of existing truck fillstand facility and associated existing 40-Series tanks.

Ultimate project summary objectives and capability include the following:

a. Receive F-24 fuel via Fuel Main from Colonial pipeline.

b. Receive/Offload F-24 fuel from ships at Pier C and Pier D.

c. Receive/Offload F-24 fuel from truck.

d. Issue F-24 fuel to ships at Pier C and Pier D.

e. Issue F-24, JP-5, and F-76 fuels to trucks.

f. Throughout project construction, minimize interruptions to ongoing functional operations at DFSP Craney Island.

1.4.2 Location

The work shall be located at the Craney Island Fuel Terminal, Portsmouth, Virginia, approximately as indicated. The exact location will be shown by the Contracting Officer.

1.5 CONTRACT DRAWINGS

The following drawings are found in Section 00 01 15, accompany this specification and are a part thereof.

Five sets of full size contract drawings, maps, and specifications will be furnished to the Contractor without charge. Reference publications will not be furnished.

Contractor shall immediately check furnished drawings and notify the Government of any discrepancies.

1.6 PROJECT ENVIRONMENTAL GOALS

Contractor shall distribute copies of the Environmental Goals to each subcontractor and the Contracting Officer. The overall goal for design, construction, and operation is to produce a facility that meets the functional program needs and incorporates the principles of sustainability. Specifically:

a. Preserve and restore the site ecosystem and biodiversity; avoid site degradation and erosion. Minimize offsite environmental impact.

b. Use the minimum amount of energy, water, and materials feasible to meet the design intent. Select energy and water efficient equipment and strategies.

c. Use environmentally preferable products and decrease toxicity level of materials used.

d. Use renewable energy and material resources.

e. Optimize operational performance (through commissioning efforts) in order to ensure energy efficient equipment operates as intended. Consider the durability, maintainability, and flexibility of building systems.

f. Manage construction site and storage of materials to ensure no negative impact on the indoor environmental quality of the building.

g. Reduce construction waste through reuse, recycling, and supplier take-back.

1.7 EXISTING WORK

In addition to "FAR 52.236-9, Protection of Existing Vegetation, Structures, Equipment, Utilities, and Improvements":

a. Remove or alter existing work in such a manner as to prevent injury or damage to any portions of the existing work which remain.

b. Repair or replace portions of existing work which have been altered during construction operations to match existing or adjoining work, as approved by the Contracting Officer. At the completion of operations, existing work shall be in a condition equal to or better than that which existed before new work started.

1.8 ON-SITE PERMITS

1.8.1 Utility Outage Requests and Utility Connection Requests

Notify the Contracting Officer at least 48 hours prior to starting excavation work. Contractor is responsible for marking and verifying all utilities not marked.

The Contractor shall verify the elevations of existing piping, utilities, and any type of underground obstruction not indicated or specified to be removed. But indicated in locations to be transversed by piping, ducts, and other work to be installed. Verify elevations before installing new work closer than nearest manhole or other structure at which an adjustment in grade can be made.

Work shall be scheduled to hold outages to a minimum.

Utility outages and connections required during the prosecution of work that affect existing systems shall be arranged for at the convenience of the Government and shall be scheduled outside the regular working hours or on weekends.

Contractor shall not be entitled to additional payment for utility outages and connections required to be performed outside the regular work hours.

1.8.2 Borrow, Excavation, Welding, and Burning Permits

ACTIVITY	SUBMISSION DATE
Excavation Permits	(Not needed if 3rd party utility locator services are used.)
Welding Permits	30 calendar days prior to work

Permits shall be posted at a conspicuous location in the construction area.

Burning of trash or rubbish is not permitted at project site.

1.9 LOCATION OF UNDERGROUND UTILITIES

Using services of a 3rd party utility locator service, Contractor shall contact the Contracting Officer 15 calendar days prior to start of excavation. Scan the construction site with electromagnetic or sonic equipment, and mark the surface of the ground where existing underground utilities are discovered. Verify the elevations of existing piping, utilities, and any type of underground or encased obstruction not indicated to be specified or removed but indicated or discovered during scanning in locations to be traversed by piping, ducts, and other work to be conducted or installed. Verify elevations before installing new work closer than nearest manhole or other structure at which an adjustment in grade can be made.

1.9.1 Notification Prior to Excavation

Notify the Contracting Officer at least 48 hours prior to starting

excavation work. Contact Miss Utility 48 hours prior to excavating. Contractor is responsible for marking all utilities not marked by Miss Utility.

1.10 GOVERNMENT-FURNISHED MATERIAL AND EQUIPMENT

Pursuant to Contract Clause "FAR 52.245-2, Government Property (Fixed Price Contracts)", the Government will furnish the following materials and equipment for installation by the Contractor:

Contractor shall furnish any additional quantities required, as indicated.

1.10.1 Salvage Items for Re-Installation

Additional items for re-installation are as follows:

a. Four (4) Loading Arms from Yorktown (Re-Install three (3) only)

b. Scully Truck Overfill Equipment from Existing Truck Stand

c. Fuel Meters from Existing Truck Stand

d. Microload Controller Equipment from Existing Truck Stand

1.10.2 Delivery Schedule

Notify the Contracting Officer in writing at least 30 calendar days in advance of the date on which the materials and equipment are required. Pick up materials and equipment no later than 30 calendar days after such date.

1.10.3 Delivery Location

The materials and equipment are located at the site.

1.11 Navy and Marine Corps (NMCI) Coordination Requirements

1.11.1 NMCI Contractor Access

The NMCI Contractor must be allowed access to the facility towards the end of construction (finishes 90 percent complete, rough-in 100 percent complete, Inside Plant (ISP)/Outside Plant (OSP) infrastructure in place) to provide equipment in the telecommunications rooms and make final connections. Coordinate efforts with the NMCI contractor to facilitate joint use of building spaces during the final phases of construction. After the Contracting Officer has facilitated coordination meetings between the two contractors, the construction contractor must, within one week, incorporate the effort of additional contractor coordination into construction schedule to demonstrate plan for maintaining the contract duration.

1.12 SALVAGE MATERIAL AND EQUIPMENT

Items designated by the Contracting Officer to be salvaged shall remain the property of the Government.

The salvaged property shall be segregated, itemized, delivered, and off-loaded at the Government designated storage area at the site.

Contractor shall maintain property control records for material or

equipment designated as salvage. Contractor's system of property control may be used if approved by the Contracting Officer. Contractor shall be responsible for storage and protection of salvaged materials and equipment until disposition by the Contracting Officer.

PART 2 PRODUCTS

Not used.

PART 3 EXECUTION

Not used.

-- End of Section --

SECTION 01 14 00

WORK RESTRICTIONS
11/11

PART 1 GENERAL

1.1 DEFINITIONS

1.1.1 State

"State" when used in reference to states of the United States also includes the Territory of Guam.

1.2 SUBMITTALS

Government approval is required for submittals with a "G" designation; submittals not having a "G" designation are for Contractor Quality Control approval. The following shall be submitted in accordance with Section 01 33 00 SUBMITTAL PROCEDURES:

SD-01 Preconstruction Submittals

List of Contact Personnel; G

1.3 SPECIAL SCHEDULING REQUIREMENTS

a. The Craney Island facility, including truck fillstand, 500 series tanks, Pier C, Pier D, Tie-In area, etc. will remain in operation during the entire construction period. The Contractor must conduct his operations so as to cause the least possible interference with normal operations of the activity.

b. Permission to interrupt any Activity roads, and/or utility service must be requested in writing a minimum of 15 calendar days prior to the desired date of interruption.

c. The work under this contract requires special attention to the scheduling and conduct of the work in connection with existing operations. Identify on the construction schedule each factor which constitutes a potential interruption to operations.

d. General Project Work Restrictions:

1. Contractor shall organize the work to minimize impact and disturbance to FLC Craney operations.

2. All contractor requests for major utility and/or vehicular/personnel access shutdowns to work areas must be submitted in writing a minimum of fourteen (14) calendar days in advance, to reduce overall disruption of existing operational facilities.

3. Contractor shall assume that all new above-grade pipe welding (hot work) on Pier C, Pier D, and along Waterfront Drive will be restricted during occurrences of ship fueling operations (minimum 200-foot safety zone setback restriction from ship) or during Oily Waste Water (OWWO) transfer piping operations. Downtime schedule

information will be made available from the Facility Operations Office.

4. Regarding loading arm relocation from DFSP Yorktown to DFSP Craney Island, a minimum of one (1) loading arm at Yorktown must remain fully functional at Yorktown until Pier C and Pier D-South's F-24 loading arms are completed, fully commissioned, and fully operational at DFSP Craney Island facility. Contractor to assume Yorktown loading arm removal/relocation/reconditioning will require a minimum of two (2) separate activities to assure DFSP Yorktown loading arm capability is maintained.

5. Only one "Access Lane" of existing Pier C will be allowed to have restricted or reduced access at a time. A minimum of thirty (30) calendar days' advance approval from FLC Craney is required.

6. Only one Pier D access Approach Ramp (either Pier D-South or Pier D-North) will be allowed to have restricted access at a time.

7. To meet Truck Fillstand site soil surcharge requirements, Contractor shall schedule the work to allow placement of all required soil surcharge measures (soil placement, wick drain installation, settlement monitoring, etc.). See specific requirements and guidance in the contract documents.

8. Removal and reuse of existing equipment from the existing DFSP Craney truck fillstand (Microload controller equipment, and the Scully truck overfill equipment) must accommodate the full functionality of at least two (2) loading arms per product (JP-5 and F-76) until the new Truck Fillstand becomes fully operational(commissioned, accepted, and placed into service).

9. A maximum downtime of three (3) calendar days will be allowed for new F-24 pipeline connection at the existing Colonial pipeline tie-in station area. Contractor must request approval from FLC Craney a minimum of thirty (30) calendar days in advance.

10. For all other major fuel pipeline connections (including Pier C), a maximum downtime of two (2) calendar days will be allowed. Contractor must request approval from FLC Craney a minimum of fourteen (14) calendar days in advance.

11. When constructing roadway trench crossing structures, vehicle traffic can be restricted at either the Ocean Road crossing location or at the Waterfront Drive crossing location (pier C), but not both simultaneously. Also, vehicular traffic can be restricted at either the Maintenance Road crossing location or at the Access Road "A" crossing location, but not both simultaneously.

12. Pier D North fuel piping work shall not begin until all work associated with Pier D South (piping, loading arms, etc.) has been completed, commissioned, accepted, and system is fully operational.

13. The existing gas/diesel Convault Tank located south of the existing truck fillstand facility must be fully accessible to LB&B operations personnel during all phases of the existing truck fillstand demolition.

14. No land-based cranes will be allowed to be used on Pier C

(floating cranes only will be allowed).

e. General Project Sequencing:

1. General Sequencing Requirements:

All specific/detailed scheduling and sequencing is the ultimate responsibility of the contractor. The following suggested phasing is intended to provide overall non-specific sequencing guidance only. In general, sequencing sub-items may be performed in any particular order within the phase, but all sub-items shall be completed prior to advancing to next Phase of work.

2. Phase I Sequencing Sub-Items:

(a) Soil embankment surcharge/preloading (including subgrade tank foundation demolition, soil placement, wick drain installation, etc.) at new Truck Fillstand area.

(b) Misc utility relocations (water, storm drainage, power, controls, etc.) At critical locations, as determined by contractor.

(c) At the contractor's discretion and with approval from FLC operations, installation of pile foundations, pipe supports, and abovegrade fuel piping at areas other than new Truck Fillstand can be allowed during this phase or in phase II.

3. Phase II Sequencing Sub-Items:

(a) Construct tie-in station piping & equipment (including JP-5 pipeline rerouting, F-24 piping & valves, associated footing/ pile foundations, flashpoint monitor equipment, meter equipment, associated sitework, etc.).

(b) Construct new Truck Fillstand (including JP-5 day storage tanks, multiple product loading & unloading piping & equipment, canopy & access platforms, additive tanks & equipment (Bid Option A-3), associated footing / pile foundations, containment system, utilities, site development, etc.).

(c) At DFSP Yorktown, remove two (2) fuel loading arms, transport, recondition and reinstall at Pier C and Pier D-South.

(d) Install all abovegrade piping (including associated footing/pile foundations, roadway crossing structures, associated equipment, meter stations, etc.) at the following locations:

(1) From F-24 tie-in station to new Truck Fillstand

(2) From new Truck Fillstand to 500-series storage tanks

(3) From 500-series storage tanks to Pier C (including Pier C loading arm)

(4) From Pier C to Pier D-South (including Pier D-South

loading arm)

(e) Modify / convert existing JP-5 bulk storage tank #501 (only) to accommodate F-24 fuel.

4. Phase III Sequencing Sub-Items:

(a) Modify / convert existing JP-5 bulk storage tank #502 to accommodate F-24 fuel.

(b) Install associated controls, perform final testing, and commission the following general areas:

(1) F-24 tank filling operation (from tie-in station to tanks)

(2) Multiple product offloading and loading at new Truck Fillstand

(3) F-24 offloading and loading at Pier C

(4) F-24 offloading and loading at Pier D-South

5. Phase IV Sequencing Sub-Items:

(a) Demolish existing truck fillstand and associated equipment.

(b) At DFSP Yorktown, remove, transport, recondition and re-install remaining loading arm at Pier D-North.

(c) Install abovegrade piping from Pier D-South to Pier D-North (up to and including loading arm), Pier D equipment pad, associated Pier D-North equipment, complete final commissioning, and place into full operation.

(d) Demolish existing remaining 40-Series tanks (#40, #42, and #43) and associated abovegrade piping within the existing containment berm area (Bid Option A-1).

1.4 CONTRACTOR ACCESS AND USE OF PREMISES

1.4.1 Activity Regulations

Ensure that Contractor personnel employed on the Activity become familiar with and obey Activity regulations including safety, fire, traffic and security regulations. Keep within the limits of the work and avenues of ingress and egress. To minimize traffic congestion, delivery of materials must be outside of peak traffic hours (6:30 to 8:00 a.m. and 3:30 to 5:00 p.m.) unless otherwise approved by the Contracting Officer. Wear hard hats in designated areas. Do not enter any restricted areas unless required to do so and until cleared for such entry. Mark Contractor equipment for identification.

1.4.1.1 Subcontractors and Personnel Contacts

Provide a list of contact personnel of the Contractor and subcontractors including addresses and telephone numbers for use in the event of an emergency. As changes occur and additional information becomes available, correct and change the information contained in previous lists.

1.4.1.2 Identification Badges and Installation Access

Application for and use of badges will be as directed. Obtain access to the installation by participating in the Navy Commercial Access Control System (NCACS), or by obtaining passes each day from the Base Pass and Identification Office. Costs for obtaining passes through the NCACS are the responsibility of the Contractor. One-day passes, issued through the Base Pass and Identification Office, will be furnished without charge. Furnish a completed EMPLOYMENT ELIGIBILITY VERIFICATION (DHS FORM I-9) form for all personnel requesting badges. This form is available at http://www.uscis.gov/portal/site/uscis by searching or selecting Employment Verification (Form I-9). Immediately report instances of lost or stolen badges to the Contracting Officer.

a. NCACS Program: NCACS is a voluntary program in which Contractor personnel who enroll, and are approved, are subsequently granted access to the installation for a period up to one year, or the length of the contract, whichever is less, and are not required to obtain a new pass from the Base Pass and Identification Office for each visit. The Government performs background screening and credentialing. Throughout the year the Contractor employee must continue to meet background screening standards. Periodic background screenings are conducted to verify continued NCACS participation and installation access privileges. Under the NCACS program, no commercial vehicle inspection is required, other than for Random Anti-Terrorism Measures (RAM) or in the case of an elevation of Force Protection Conditions (FPCON). Information on costs and requirements to participate and enroll in NCACS is available at http://www.rapidgate.com or by calling 1-877-727-4342. Contractors should be aware that the costs incurred to obtain NCACS credentials, or costs related to any means of access to a Navy Installation, are not reimbursable. Any time invested, or price(s) paid, for obtaining NCACS credentials will not be compensated in any way or approved as a direct cost of any contract with the Department of the Navy.

1.4.1.3 No Smoking Policy

Smoking is prohibited within and outside of all buildings on installations under the cognizance of NAVFAC MIDLANT except in designated smoking areas. This applies to existing buildings, buildings under construction and buildings under renovation. Discarding tobacco materials other than into designated tobacco receptacles is considered littering and is subject to fines. The Contracting Officer will identify designated smoking areas.

1.4.2 Radioactive Materials and Equipment

All testing equipment, containing a radioactive source, must be operated in accordance with an approved radioactive equipment plan. This plan must be submitted to the Contracting Officer and approved by the Radiation Officer (Code 105.5), prior to bringing the equipment into the shipyard. This plan must include:

a. The name and type of equipment.

b. The type and size of radiation source.

c. The dates and locations of the equipment's usage.

d. The radiological controls that the Contractor will use while operating the equipment.

A different radioactive equipment plan will be required for each different type of equipment, type of radioactive source, or size of radioactive source. A data sheet of for each piece of new radioactive equipment must be submitted to the Contracting Officer to forward to the shipyard's Radiation Safety Officer. The data sheet must contain the following information:

a. Name of equipment.

b. Name and address of equipment manufacturer.

c. Type and size of radiation source.

d. The location of the installed radioactive equipment (i.e. building no., floor, code/shop area).

1.4.3 Work Outside Regular Hours

Work outside regular working hours requires Contracting Officer approval. Make application 15 calendar days prior to such work to allow arrangements to be made by the Government for inspecting the work in progress, giving the specific dates, hours, location, type of work to be performed, contract number and project title. Based on the justification provided, the Contracting Officer may approve work outside regular hours. During periods of darkness, the different parts of the work must be lighted in a manner approved by the Contracting Officer. Make utility cutovers after normal working hours or on Saturdays, Sundays, and Government holidays unless directed otherwise.

1.4.4 Utility Cutovers and Interruptions

a. Make utility cutovers and interruptions after normal working hours or on Saturdays, Sundays, and Government holidays. Conform to procedures required in the paragraph "Work Outside Regular Hours."

b. Ensure that new utility lines are complete, except for the connection, before interrupting existing service.

c. Interruption to water, sanitary sewer, storm sewer, telephone service, electric service, fire alarm, compressed air, and fuel piping are considered utility cutovers pursuant to the paragraph entitled "Work Outside Regular Hours." Such interruption are further limited to 12 hours or as specifically approved by Craney FLC Operations personnel. This time limit includes time for deactivation and reactivation.

d. Operation of Station Utilities: The Contractor must not operate nor disturb the setting of control devices in the station utilities system, including water, sewer, electrical, control systems and fuel services. The Government will operate the control devices as required for normal conduct of the work. The Contractor must notify the Contracting Officer giving reasonable advance notice when such operation is required.

PART 2 PRODUCTS

Not Used

PART 3 EXECUTION

Not Used

-- End of Section --

SECTION 01 20 00.00 20

PRICE AND PAYMENT PROCEDURES
11/11

PART 1 GENERAL

1.1 REFERENCES

The publications listed below form a part of this specification to the extent referenced. The publications are referred to within the text by the basic designation only.

U.S. ARMY CORPS OF ENGINEERS (USACE)

EP-1110-1-8	(2009) Construction Equipment Ownership and Operating Expense Schedule

1.2 SUBMITTALS

Government approval is required for submittals with a "G" designation; submittals not having a "G" designation are for Contractor Quality Control approval. The following shall be submitted in accordance with Section 01 33 00 SUBMITTAL PROCEDURES:

SD-01 Preconstruction Submittals

Schedule of Prices; G

1.3 SCHEDULE OF PRICES

1.3.1 Data Required

Within 15 calendar days of notice of award, prepare and deliver to the Contracting Officer a Schedule of Prices (construction contract) as directed by the Contracting Officer. Provide a detailed breakdown of the contract price, giving quantities for each of the various kinds of work, unit prices, and extended prices.

1.3.2 Schedule Instructions

Payments will not be made until the Schedule of Prices has been submitted to and accepted by the Contracting Officer.

1.4 CONTRACT MODIFICATIONS

In conjunction with the Contract Clause "DFARS 252.236-7000, Modification Proposals-Price Breakdown," and where actual ownership and operating costs of construction equipment cannot be determined from Contractor accounting records, equipment use rates shall be based upon the applicable provisions of the EP-1110-1-8.

1.5 CONTRACTOR'S INVOICE AND CONTRACT PERFORMANCE STATEMENT

1.5.1 Content of Invoice

Requests for payment will be processed in accordance with the Contract Clause FAR 52.232-27, Prompt Payment Construction Contracts

and FAR 52.232-5, Payments Under Fixed-Price Construction Contracts. The requests for payment shall include the documents listed below.

a. The Contractor's invoice, on NAVFAC Form 7300/30 furnished by the Government, showing in summary form, the basis for arriving at the amount of the invoice. Form 7300/30 shall include certification by Quality Control (QC) Manager as required by the contract.

b. The Estimate for Voucher or Contract Performance Statement on NAVFAC Form 7300/31 furnished by the Government, showing in detail: the estimated cost, percentage of completion, and value of completed performance. Use NAVFAC LANT Form 4-330/110 (New 7/84) on NAVFAC LANT contracts when a Monthly Estimate for Voucher is required.

c. A final invoice shall be accompanied by the certification required by DFARS 252.247.7023 TRANSPORTATION OF SUPPLIES BY SEA, and the Contractor's Final Release. If the Contractor is incorporated, the Final Release shall contain the corporate seal. An officer of the corporation shall sign and the corporate secretary shall certify the Final Release.

d. Updated Project Schedule and reports required by the contract.

e. Contractor Safety Self Evaluation Checklist.

f. Monthly Work-hour report.

g. Solid Waste Disposal Report.

h. Other supporting documents as requested.

1.5.2 Submission of Invoices

If NFAS Clause 5252.232-9301 is included in the contract, the documents listed in paragraph "CONTENT OF INVOICE" shall be provided in their entirety as attachments in Wide Area Work Flow (WAWF) for each invoice submitted. The maximum size of each WAWF attachment is two megabytes, but there are no limits on the number of attachments. If a document cannot be attached in WAWF due to system or size restriction it shall be provided as instructed by the Contracting Officer.

1.5.3 Final Invoice

a. A final invoice shall be accompanied by the certification required by DFARS 252.247.7023 TRANSPORTATION OF SUPPLIES BY SEA, and the Contractor's Final Release. If the Contractor is incorporated, the Final Release shall contain the corporate seal. An officer of the corporation shall sign and the corporate secretary shall certify the Final Release.

b. For final invoices being submitted via WAWF, the original Contractor's Final Release Form and required certification of Transportation of Supplies by Sea must be provided directly to the respective Contracting Officer prior to submission of the final invoice. Once receipt of the original Final Release Form and required certification of Transportation of Supplies by Sea has been confirmed by the Contracting Officer, the Contractor shall then submit final invoice and attach a copy of the Final Release Form and required certification of Transportation of Supplies by Sea in WAWF.

c. Final invoices not accompanied by the Contractor's Final Release and required certification of Transportation of Supplies by Sea will be considered incomplete and will be returned to the Contractor.

1.6 PAYMENTS TO THE CONTRACTOR

Payments will be made on submission of itemized requests by the Contractor which comply with the requirements of this section, and will be subject to reduction for overpayments or increase for underpayments made on previous payments to the Contractor.

1.6.1 Obligation of Government Payments

The obligation of the Government to make payments required under the provisions of this contract will, at the discretion of the Contracting Officer, be subject to reductions and/or suspensions permitted under the FAR and agency regulations including the following in accordance with "FAR 32.503-6:

a. Reasonable deductions due to defects in material or workmanship;

b. Claims which the Government may have against the Contractor under or in connection with this contract;

c. Unless otherwise adjusted, repayment to the Government upon demand for overpayments made to the Contractor; and

d. Failure to provide up to date record drawings not current as stated in Contract Clause "FAC 5252.236-9310, Record Drawings."

PART 2 PRODUCTS

Not Used

PART 3 EXECUTION

Not Used

-- End of Section --

SECTION 01 30 00

ADMINISTRATIVE REQUIREMENTS
11/11

PART 1 GENERAL

1.1 SUBMITTALS

Government approval is required for submittals with a "G" designation; submittals not having a "G" designation are for Contractor Quality Control approval. The following shall be submitted in accordance with Section 01 33 00 SUBMITTAL PROCEDURES:

SD-01 Preconstruction Submittals

List of Contact Personnel; G

1.2 MINIMUM INSURANCE REQUIREMENTS

Procure and maintain during the entire period of performance under this contract the following minimum insurance coverage:

a. Comprehensive general liability: $500,000 per occurrence

b. Automobile liability: $200,000 per person, $500,000 per occurrence for bodily injury, $20,000 per occurrence for property damage

c. Workmen's compensation as required by Federal and State workers' compensation and occupational disease laws.

d. Employer's liability coverage of $100,000, except in States where workers compensation may not be written by private carriers,

e. Others as required by Commonwealth of Virginia.

1.3 CONTRACTOR SPECIAL REQUIREMENTS

1.3.1 Subcontractors and Personnel

Furnish a list of contact personnel of the Contractor and subcontractors including addresses and telephone numbers for use in the event of an emergency. As changes occur and additional information becomes available, correct and change the information contained in previous lists.

1.3.2 Identification Badges

Identification badges, if required, will be furnished without charge. Application for and use of badges will be as directed.

1.4 SUPERVISION

Have at least one qualified supervisor capable of reading, writing, and conversing fluently in the English language on the job site during working hours. In addition, if a Quality Control (QC) representative is required on the contract, then that individual shall also have fluent English communication skills.

1.5 PRECONSTRUCTION CONFERENCE

After award of the contract but prior to commencement of any work at the site, meet with the Contracting Officer to discuss and develop a mutual understanding relative to the administration of the value engineering and safety program, preparation of the schedule of prices or earned value report, shop drawings, and other submittals, scheduling programming, prosecution of the work, and clear expectations of the "Interim DD Form 1354" Submittal. Major subcontractors who will engage in the work shall also attend.

1.6 FACILITY TURNOVER PLANNING MEETINGS (NAVFAC Red Zone - NRZ)

Key personnel will meet to identify strategies to ensure the project is carried to expeditious closure and turnover to the Client. Start the turnover process at the Pre Construction Conference meeting and convene at the Facility Turnover Meetings once the project has reached approximately 75 percent completion or three to six months prior to Beneficial Occupancy Date (BOD), whichever comes first. The Contracting Officer's Representative will lead the meetings and guide discussions based on an agenda provided by the Government. The facility Turnover effort shall include the following:

a. Pre Construction Meeting - Contracting Officer's Technical Representative (COTR) will provide the NRZ Checklist and the Contractor, Client, and NAVFAC Representatives will compare Contractor's schedule to NRZ Checklist items.

b. Facility Turnover Meetings

   1. Fill in the NRZ Checklist including Contractor, Client, and NAVFAC Checklist Items and assign a person responsible for each item and a due date. The Contractor's Representative will facilitate the assignment of responsibilities, fill out the NRZ Checklist, and discuss "Interim DD From 1354" requirements.

   2. Review the Contractor's updated schedule. The Contractor shall develop a POAM for the completion of all Contractor, Client, and NAVFAC Checklist items.

   3. Confirm that all NRZ Checklist items will be completed on time for the scheduled Facility Turnover.

1.7 PARTNERING

To most effectively accomplish this contract, the Government requires the formation of a cohesive partnership within the Project Team whose members are from the Government, the Contractor and their Subcontractors. Key personnel from the Supported Command, the End User (who will occupy the facility), NAVFAC (Echelon III and IV), the Navy Region/Installation, the Contractor and Subcontractors, and the Designer of Record will be invited to participate in the Partnering process. The Partnership will draw on the strength of each organization in an effort to achieve a project that is without any safety mishaps, conforms to the Contract, and stays within budget and on schedule.

The Contracting Officer will provide Information on the Partnering Process and a list of key and optional personnel who should attend the Partnering meeting.

1.7.1 Formal Partnering

Provide and host the Partnering sessions with key personnel of the Project Team, including Contractor personnel and Government personnel. Pay all costs associated with the Partnering effort including the Facilitator, the meeting room, and other incidental items. In exception, participants shall bear their own costs for meals, lodging, and transportation associated with the Partnering sessions.

Before a Partnering session, coordinate with the Facilitator all requirements for incidental items (such as audio-visual equipment, easels, flipchart paper, colored markers, note paper, pens/pencils, colored flash cards, etc.), and have these items available at the Partnering session. Provide copies of documents for distribution to all attendees.

The Facilitator shall be experienced in conducting Partnering Workshops, and shall be acceptable to both the Government and the Contractor. The Facilitator is responsible for leading the team in a timely manner and making sure that issues are identified and resolved. A list of Partnering Facilitators is available from the Contracting Officer.

a. The Initial Partnering Session shall be a duration of one day minimum. It shall be located at a place off the construction site, as agreed to by the Contracting Officer and the Contractor. It may take place concurrently with the Pre-Construction Meeting.

b. The Follow-on Partnering Session(s) generally last a half day or less. Schedule them at 3 to six month intervals, or when needed. Participants are encouraged to utilize electronic means to expedite meetings. Meetings may be held at a location off-Base, at the project site, or in a Government Facility on Base. Follow-on meetings may be held concurrently with other scheduled meetings. Attendees need only be those required to resolve current issues. Recommend using the same Facilitator from the Initial Partnering session to achieve best results and for continuity.

1.8 AVAILABILITY OF CADD DRAWING FILES

After award and upon request, the electronic "Computer-Aided Drafting and Design (CADD)" drawing files will only be made available to the Contractor for use in preparation of construction data related to the referenced contract subject to the following terms and conditions.

Data contained on these electronic files shall not be used for any purpose other than as a convenience in the preparation of construction data for the referenced project. Any other use or reuse shall be at the sole risk of the Contractor and without liability or legal exposure to the Government. The Contractor shall make no claim and waives to the fullest extent permitted by law, any claim or cause of action of any nature against the Government, its agents or sub consultants that may arise out of or in connection with the use of these electronic files. The Contractor shall, to the fullest extent permitted by law, indemnify and hold the Government harmless against all damages, liabilities or costs, including reasonable attorney's fees and defense costs, arising out of or resulting from the use of these electronic files.

These electronic CADD drawing files are not construction documents. Differences may exist between the CADD files and the corresponding

construction documents. The Government makes no representation regarding the accuracy or completeness of the electronic CADD files, nor does it make representation to the compatibility of these files with the Contractors hardware or software. In the event that a conflict arises between the signed and sealed construction documents prepared by the Government and the furnished CADD files, the signed and sealed construction documents shall govern. The Contractor is responsible for determining if any conflict exists. Use of these CADD files does not relieve the Contractor of duty to fully comply with the contract documents, including and without limitation, the need to check, confirm and coordinate the work of all contractors for the project.

If the Contractor uses, duplicates and/or modifies these electronic CADD files for use in producing construction data related to this contract, all previous indicia of ownership (seals, logos, signatures, initials and dates) shall be removed.

1.9 ELECTRONIC MAIL (E-MAIL) ADDRESS

The Contractor shall establish and maintain electronic mail (e-mail) capability along with the capability to open various electronic attachments in Microsoft, Adobe Acrobat, and other similar formats. Within 10 days after contract award, the Contractor shall provide the Contracting Officer a single (only one) e-mail address for electronic communications from the Contracting Officer related to this contract including, but not limited to contract documents, invoice information, request for proposals, and other correspondence. The Contracting Officer may also use email to notify the Contractor of base access conditions when emergency conditions warrant, such as hurricanes, terrorist threats, etc. Multiple email address will not allowed.

It is the Contractor's responsibility to make timely distribution of all Contracting Officer initiated e-mail with its own organization including field office(s). The Contractor shall promptly notify the Contracting Officer, in writing, of any changes to this email address.

PART 2 PRODUCTS

Not Used

PART 3 EXECUTION

Not Used

-- End of Section --

SECTION 01 32 17.00 20

NETWORK ANALYSIS SCHEDULES (NAS)
11/09

PART 1 GENERAL

1.1 DESCRIPTION

The network analysis system shall consist of the network analysis schedule (diagram) and associated reports. The scheduling of all procurement and construction shall be the responsibility of the Contractor. Construction increments will be interrelated on a single schedule that represents the entire project duration from Contract Award to the Contract Completion Date. Schedule updates will build upon each other and will include construction increments as they are detailed, submitted and accepted. Submission of progress and revision data will be used to measure work progress, aid in the evaluation for requests for time extensions, and to provide the basis of all progress payments. The Critical Path Method (CPM) of network calculation shall be used to generate the project schedule and will utilize the Precedence Diagram Method (PDM) to satisfy both time and cost applications. All progress payment amounts will be derived from and tied to the cost-loaded schedule activities.

For consistency, when scheduling software terminology is used in this specification, the terms in Primavera's scheduling programs are used. Primavera Project Planner, P3, Primavera Project Manager, SureTrak and PrimeContract are registered trademarks or service marks of Primavera Systems, Inc. Adobe and Acrobat are registered trademarks of Adobe Systems Incorporated.

1.2 SUBMITTALS

Government approval is required for submittals with a "G" designation; submittals not having a "G" designation are for Contractor Quality Control approval. Submit the following in accordance with Section 01 33 00 SUBMITTAL PROCEDURES:

SD-01 Preconstruction Submittals

Qualifications; G

Standard Activity ID Dictionary; G

Construction Network Analysis Schedule; G

Baseline Network Analysis Schedule; G

SD-07 Certificates

Monthly Network Analysis Updates; G

Summary Network; G

SD-11 Closeout Submittals

As-Built Schedule; G

1.3 SCHEDULE ACCEPTANCE

Review comments made by the Government on the Contractor's schedule(s) will not relieve the Contractor from compliance with requirements of the Contract Documents. The Contractor is responsible for scheduling, sequencing, and prosecuting the Work to comply with the requirements of the Contract Documents. Government acceptance extends only to the activities of the Contractor's schedule that the Government has been assigned responsibility and agrees it is responsible. The Government will also review for contract imposed schedule constraints and conformance, and cost loading of the CPM activities. Comments offered on other parts of the schedule, which the Contractor is assigned responsibility, are offered as a courtesy and are not conditions of Government acceptance; but are for the general conformance with established industry schedule concepts.

1.3.1 Schedule Acceptance Prior to Start of Work

The Baseline Network Analysis Schedule described in the paragraph entitled "Baseline Network Analysis Schedule" must be submitted and accepted by the Government before the Contractor will be allowed to start work on the construction stage(s) of the contract. Examples of construction stages are, but not limited to; demolition, site work, temporary work for construction, etc.

1.3.2 Acceptance

a. When the Construction Network Analysis Schedule is submitted and accepted by the Contracting Officer, it will then be considered the "Baseline Network Analysis Schedule". The Baseline Network Analysis Schedule will then be used by the Contractor for planning, organizing, and directing the work; reporting progress; and requesting payment for work accomplished. The schedule will be updated monthly by the Contractor and submitted monthly with the progress pay request to reflect the current status of the work. Submittal and acceptance of the Baseline Network Analysis Schedule and accurate updated schedules accompanying the pay requests are both conditions precedent to processing pay requests. Only bonds will be paid prior to acceptance of the Baseline Schedule(s).

b. Submittal of the Baseline Network, and subsequent schedule updates, will be understood to be the Contractor's certification that the submitted schedule meets all of the requirements of the Contract Documents, represents the Contractor's plan on how the work will be accomplished, and accurately reflects the work that has been accomplished and how it was sequenced (as-built logic).

1.4 SOFTWARE

The scheduling software that will be utilized by the Government on this project is SureTrak by Primavera Systems, Inc. or Primavera Project Planner (P3) by Primavera Systems, Inc. Notwithstanding any other provision in the contract, schedules submitted for this project must be prepared using either Primavera P3 or Primavera SureTrak (files saved in Concentric P3 format). The Contractor shall provide electronic files saved in a format that is compatible with the Contracting Officer's current software version. Submission of data from another software system where data conversion techniques or software is used to import into Primavera's scheduling software is not acceptable and will be cause for rejection of the submitted schedule.

1.5 QUALIFICATIONS

The Contractor shall designate a Scheduler that will be responsible for the development, preparation, and maintenance of an accurate, computerized Network Analysis Schedule. The Scheduler shall have previously developed, created and maintained at least 2 previous computerized schedules of similar size and complexity of this contract. A resume outlining the qualifications of the Scheduler and their SureTrak or P3 training certificate from an authorized Primavera trainer shall be submitted for acceptance to the Contracting Officer. If at a later date, the Contracting Officer considers the Contractor's Scheduler to be incompetent or objectionable, the Contractor will propose a new Scheduler, meeting the qualification requirements. Payments will not be processed until an acceptable Scheduler is provided.

1.6 NETWORK SYSTEM FORMAT

The system shall consist of time scaled logic diagrams and specified reports.

1.6.1 Diagrams

Show the order and interdependence of activities and the sequence in which the work is planned to be accomplished. The basic concept of the network analysis diagram will be followed to show how the start of a given activity is dependent on the completion of preceding activities and how its completion restricts or restrains the start of following activities. Activity durations shall not be resource-driven, activities shall start according to network logic and finish when its duration has elapsed. Diagrams shall be sorted by Early Start Date and will show a continuous flow from left to right with no logic (relationship lines) from right to left. With the exception of the Contract Award, Start Project and End Project milestone activities, no activities will be open-ended; each activity will have predecessor and successor ties. The diagram shall clearly show the activities of the critical path and must be red in color. Once an activity exists on the schedule it may not be deleted or renamed, and must remain in the logic. No more than 20 percent of the activities may be critical or near critical. Critical will be defined as having zero days of Total Float. "Near critical" will be defined as having Total Float in the range of 1 to 14 days. Show the following information on the diagrams for each activity:

a. Activity ID

b. Activity Description

c. Original Duration in Work Days

d. Remaining duration

e. Actual Duration in Work Days

f. Early Start Date

g. Early Finish Date

h. Total Float

Provide network diagrams on tabloid (11X17), ANSI D or ANSI E sheets. Updated diagrams shall show the date of the latest revision.

1.6.2 Schedule Activity Properties and Level of Detail

Numbering shall be assigned so that, in general, predecessor activity numbers are smaller numerically than the successor activity numbers. Skip numbering shall be used on the network to allow insertion of additional activities for contract modifications and logic changes. Activity categories included in the schedule are specified below.

1.6.2.1 Activity Categories

a. Procurement Activities: Tasks related to the procurement of material or equipment shall be included as separate activities in the project schedule. Examples of procurement activities include, but are not limited to; Material/equipment submittal preparation, submittal and approval of material/equipment; delivery of O&M manuals; material/equipment fabrication and delivery, delivery of extra parts, extra stock, special tools, notification of Government Furnished Material/Equipment delivery requirement, etc. As a minimum, separate procurement activities will be provided for every specification section. If the Contractor intends on using Just-In-Time (JIT) delivery methods, the schedule will show each JIT delivery with relationship tie to the Construction Activity specifically for the JIT delivery. Material and equipment for which payment will be requested in advance of installation shall be cost-loaded with the procurement costs (e.g.; the delivery milestone(s)). All activities within a procurement process/cycle will have a unique identifier in the activity code to show their relationships and will extend to the related construction activities (i.e., CSI Code).

    1. If the Government's action on any submittal is "Disapproved" or "Revise and Resubmit", a new series of Procurement Activities will be inserted into the schedule. Predecessor for the new submittal preparation activity will be the original approval activity and the successor of the new approval activity will be the fabrication/deliver activity for the equipment or material.

b. Government Activities: Government and other agency activities that could impact progress shall be clearly identified. Government activities include, but are not limited to; Government approved submittal reviews, Government conducted inspections/tests, environmental permit approvals by State regulators, utility outages, Notice(s) to Proceed and delivery of Government Furnished Material/Equipment. Show activities indicating Government furnished materials and equipment utilizing delivery dates indicated in "FAR 52.245-2, Government Property (Fixed-Price Contracts)." Government activities will be driven by calendars that reflect Saturdays, Sundays and all Federal Holidays as non-work days.

c. Construction Quality Management (CQM) Activities: CQM Activities will identify the Preparatory Phase and Initial Phase for each Definable Feature of Work identified in the Contractor's Quality Control Plan. These activities will be added to each 3-Week Look Ahead Schedule referenced in the paragraph entitled "THREE-WEEK LOOK AHEAD SCHEDULE" and will also be included in each monthly update referenced in the paragraph entitled "Monthly Network Analysis Updates". The Follow-up

Phase will be represented by the Construction Activities in the Baseline Schedule and in the schedule updates.

d. Construction Activities: Construction activities shall include, but are not limited to: Tasks related to mobilization or demobilization; the installation of temporary or permanent work by tradesman; testing and inspections of installed work by technicians, inspectors or engineers; start-up and testing of equipment; commissioning of building and related systems; scheduling of specified manufacture's representatives; Punch Out Inspection; Pre-Final Inspection, Final Acceptance Inspection; final clean-up; training to be provided; and administrative tasks necessary to start, proceed with, accomplish or finalize the contract. No onsite construction activity shall have a duration in excess of 20 working days. Contractor activities will be driven by calendars that reflect Saturdays, Sundays and all Federal Holidays as non-work days.

e. Hammock (Summary Network) Activities: The Contractor shall include special activities that are a summary of a chain of activities. The start of the activity will be the start date of the first activity in the chain and the finish date will be the finish date of the last activity in the chain. Generalized work sequences, Area Codes and Phase Codes will be summarized.

1.6.2.2 Project Milestones

Dates shall be shown on the diagram for the start of the project, any contract required interim start and completion dates, contract completion date and other significant milestones.

a. Project Start Date Milestones: The schedule shall start no earlier than the Contract Award Date and the project duration (Day 1) will start on the Notice-to-Proceed (NTP) date. The Contractor shall include as the first milestone in the schedule, an activity named "Contract Award". Another milestone shall be included that will be named "Start Project". The Contract Award and Project Start milestones shall have mandatory start constraint dates equal to the Contract Award and NTP dates, respectively.

b. Constraint of Last Activity Milestone: The Contractor shall include as the last activity in the project schedule, an activity named "End Project". The "End Project" activity shall have a mandatory finish constraint equal to the contract completion date for the project. Calculation of project updates shall be such that if the finish of the last activity falls after the contract completion date, then the float calculation shall reflect negative float on the critical path and if the finish of the last activity falls before the contract completion date, the float calculation shall reflect positive float on the critical path. The only predecessor activity to this activity will be either the "Contractor Early Completion" or the "Substantial Completion" milestone, whichever is used by the Contractor.

c. Early Project Completion: In the event the Contractor's project schedule shows completion of the project prior to the contract completion date, the Contractor shall include an activity named "Contractor Early Completion". The activity shall be a milestone with an unconstrained date representing the Contractor's Early Completion date. The only successor activity to this activity will be the "End Project" milestone.

d. Substantial Completion: If the Contractor elects to include an activity for Substantial Completion, then it is agreed that Substantial Completion will be the point in time that the Government considers the project is complete and ready for its intended use. The activity will be named "Substantial Completion". The activity shall be a milestone with an unconstrained date representing the Contractor's Substantial Completion date. The only successor activity to this activity will be the "End Project" milestone.

e. Phase Start Milestone: The Contractor shall include as the first activity for a project phase, an activity named "Start Phase X", where "X" identifies the phase of work. The "Start Phase X" activity shall have an unconstrained start date equal to the date of the Phase NTP. This unconstrained start date is not a release from contractually required start dates, but is left unconstrained to allow the schedule logic to calculate without hindrance.

f. End Phase Milestone: The Contractor shall include as the last activity in a project phase, an activity named "End Phase X" where "X" identifies the phase of work. The "End Phase X" activity shall have an unconstrained late finish date equal to the contract phase completion date. This unconstrained completion date is not a release from contractually required finish dates, but is left unconstrained to allow the schedule logic to calculate without hindrance.

g. Early Phase Completion: If the Contractor expects to finish prior to the contract phase completion date, the milestone will show an early finish date equal to the Contractor's early finish date. The name of the activity will be "Early Phase Completion" and will have an unconstrained date representing the Contractor's early phase completion date.

1.6.2.3 Activity Identification (ID) and Description

a. Standard Activity ID Dictionary: The Contractor shall submit the alphanumeric coding scheme for Schedule Activity Numbers that shall be used throughout the project. The coding scheme submitted shall list the values for each activity code and translate those values into project specific designations. Once accepted, the coding scheme will be used for the duration of the project.

b. Activity Description: Each activity shall have a narrative description consisting of a Verb or work function (e.g.; form, pour, excavate), an Object (e.g.; slab, footing, under floor plumbing), and Area (e.g.; 3rd floor, northeast quadrant, basement).

1.6.2.4 Activity Code Dictionary and Values

The Contractor shall establish the activity codes identified in this specification. The codes will have values assigned that will allow the scheduling program to sort, select, group and organize the activities in the schedule. Activity codes include, but are not limited to, the following codes:

a. Phase Code: If phasing is specified in the contract, all activities shall be identified in the project schedule by the Phase Code in which the activity occurs. Activities shall not be contained in more than one Phase.

b. Area Code: All activities shall be identified in the project schedule by the Area Code in which the activity occurs. Activities shall not be contained in more than one Area Code. Area is defined as distinct separations in construction, such as a story of construction, separate structure, usage or function difference, utility distribution systems, etc.

c. Responsibility Code: All activities in the project schedule shall be identified with the party responsible to perform the task. Responsibility includes, but is not limited to; the Prime Contractor, subcontracting firm, or Government agency performing a given task. Activities shall not belong to more than one responsible party. The responsible party for each activity shall be identified by a responsibility code. For example, a responsibility code value, "ELEC", may be used to identify the "Electrical Subcontractor".

d. CSI Code: All activities in the project schedule shall be identified with its respective 5-digit Specification Section number. Activities shall not belong to more than one Section number. If an activity does not have an applicable CSI Code, (such as "Mobilize"), the code will be "00000".

e. Drawing Code: All activities in the project schedule shall be identified with its respective project Drawing Code. The Drawing Code is the Sheet Number on the primary project drawing, which indicates the work to be performed. Activities shall not belong to more than one Drawing Code. Examples of Drawing Codes are "C-10", "C.10" or "C10". The code system will allow organizing all activities by Drawing Code in alpha and numeric order. If an activity does not have an applicable Drawing Code, (such as "Mobilize"), the code will be "00000".

f. Modification Code: The Modification Code shall identify activities that are modified or added by contract modification. Activities shall not belong to more than one Modification Code. The Government will assign the modification number, which will be shown on the Standard Form 30. Use a shortened version of the modification number for the code (e.g.; A00010 = 010).

g. Request for Equitable Adjustment (REA) or Claim Code: Activities that are modified or added, as a result of a Contractor's REA or Claim shall be identified by a code generated by the Contractor. Activities shall not belong to more than one REA or Claim Code.

1.6.2.5 Cost and Resource Loading

a. Cost Loading Activities: Equipment costs will be assigned to their respective Procurement Activities (i.e., the delivery milestone activity). Costs for installation of the material/equipment (labor, construction equipment, and temporary materials) will be assigned to their respective Construction Activities. The value of inspection/testing activities will not be less than 10 percent of the total costs for Procurement and Construction Activities. Evenly disperse overhead and profit to each activity over the duration of the project. The total of all cost loaded activities; including costs for material and equipment delivered for installation on the project, and labor and construction equipment loaded construction activities, shall total to 100 percent of the value of the contract.

b. Quantities and Units of Measure: Each cost loaded activity will have a detailed breakdown of the contract price, giving quantities for each of the various kinds of work, unit prices, etc. These entries are informational only and are non-calculating. Quantities shall be entered as Log Text 1 (in SureTrak) or Log 1 (in P3) for each activity, column heading will be "Quantities". Units of Measure shall be entered as Log Text 2 (in SureTrak) or Log 2 (in P3) for each activity, column heading will be "Units of Measure".

1.6.2.6 Anticipated Weather Delays

Schedule activity duration(s) shall be formulated with allowance for normal adverse weather conditions. Any activity duration, which could be impacted by normally anticipated adverse weather (precipitation, high or low temperature, wind, etc.), due to the time period that the Contractor has scheduled the work, shall include an adjustment to include the anticipated weather delay. The Contractor shall anticipate delay by comparing the contractually imposed environmental restrictions in the Contract Documents to the National Oceanic and Atmospheric Association's (NOAA) historical monthly averages for the NOAA location. The number of anticipated adverse weather delays allocated to an activity will be reflected in the activity's calendar. A lost workday, due to weather conditions, is defined as a day in which the Contractor's workforce cannot work 50 percent or more of the day on the impacted activity(s). The Contractor shall immediately notify the Contracting Officer when a lost day has occurred due to weather, will record on the Daily Reports the occurrence of adverse weather and resultant impact to the normally scheduled work. If the number of actual adverse weather delay days exceeds the number of days anticipated, the Contracting Officer will convert any qualifying delays to calendar days, giving full consideration for equivalent fair weather work days and issue a modification in accordance with the contract clauses.

1.6.2.7 Schedule Software Settings and Restrictions

a. Activity Constraints: Date/time constraint(s), other than those required by the contract, will not be allowed unless accepted by the Contracting Officer. Contractor will identify any constraints proposed and provide an explanation for the purpose of the constraint in the Narrative Report.

b. Lags: Lags will not be used when the creation of an activity will perform the same function (e.g., concrete cure time). Lag durations contained in the project schedule shall not have a negative value. Contractor will identify any lag proposed and provide an explanation for the purpose of the lag in the Narrative Report.

c. Default Progress Data Disallowed: Actual Start and Finish dates shall not be automatically updated by default mechanisms that may be included in the CPM scheduling software system. Actual Start and Actual Finish dates on the CPM schedule shall match the dates provided from Contractor Quality Control and Production Reports. These reports will be the sole basis for updating the schedule. Work activities will be updated by actual work progression rather than being cash flow driven. Actual labor and equipment hours used on activities will be derived from the Daily Reports.

d. Software Settings: If the contractor chooses to use Primavera's SureTrak software, the Autocost Rules shall be set to:

1. Uncheck - Link Remaining Duration and Schedule Percent Complete;

2. Check - Use Updated Percent Complete Against Budget to Estimate Actual to Date;

3. Check - Freeze Resource Units per Hour When Quantities Change;

4. Check - Update Cost and Revenue Information; and,

5. Set Resource Data to "Two decimal places".

If the contractor chooses to use Primavera's P3 software, the AutoCost rules shall be set as shown below, all others shall be deactivated (i.e.; check boxes and radio buttons not filled in):

a. Use the update percent complete against budget to estimate: Actual cost to date.

b. Link budget and EAC for non-progressed activities: Budget-EAC.

c. Perform these calculations during each schedule computation: Apply these rules when moving from one Resource to another.

Schedule calculations and Out-of-Sequence progress (if applicable) shall be handled through Retained Logic, not Progress Override. All activity durations and float values will be shown in days, time will not be shown in the duration display. Activity progress will be shown using Remaining Duration. Date format will be DDMMMYY (i.e., 11DEC02). Default activity type will be set to "Task".

1.6.3 Required Tabular Reports

The following reports will be based on the information in the paragraph entitled "Diagrams" and included with the schedule submittals and in each updated schedule submission provided on disk by the Contractor:

a. Earned Value Report: Listing all activities having a budget amount and cost. A compilation of total earnings on the project from the notice to proceed to the most recent monthly progress payment request and the difference between the previous request amount and the current payment request amount. Sort report first by resource and then by activity.

b. Log Report: With each updated schedule submission, provide a computer generated Log Report using a recognized schedule comparison software listing all changes made between the previous schedule and current updated schedule. Identify the name of the previous schedule and name of the current schedule being compared. This report will as a minimum show changes for: Added & Deleted Activities, Original Durations, Remaining Durations, Activity Percent Complete, Total Float, Free Float, Calendars, Descriptions, Constraints (added, deleted or changed), Actual Starts/Finishes, Added/Deleted Resources, Resource Quantities, Costs, Resource Percents, Added/Deleted Relations, Changed Relation Lags, Changed Driving Relations, and Changed Critical Status.

c. Activity ID Report: By activity number in ascending order showing the current status of all activities.

d. Total Float Report: List of all activities by total float in ascending order and then in order of activity number and/or early start date.

e. Early Start Report: By earliest allowable start dates and then in order of activity number.

f. 30-Day Look Ahead: Activities in progress or scheduled to start or finish within the next 30 calendar days of the project Data Date or is continuing through the 30 day period.

g. Predecessor/Successor Report: By activity number from lowest to highest, showing preceding and succeeding activity numbers for each activity and showing the current status of each activity.

1.7 SUBMISSION AND ACCEPTANCE

1.7.1 Preliminary Meeting

Prior to the preparation of the Construction Network Analysis Schedule for acceptance; the Contracting Officer, Contractor and the scheduler shall participate in a preliminary meeting to discuss the proposed schedule and requirements of this section prior to submission of the network. Discussions shall include: 1) Which construction activities may have delivered material costs included (e.g., concrete placement, etc.), 2) Which procurement activities will have material/equipment costs separated from their respective construction activity costs (e.g., any stored equipment, etc.) and, 3) Which procurement and construction activities will have separate testing/inspection costs; per the paragraph entitled "Cost Loading Activities".

1.7.2 Construction Network Analysis Schedule

Submit the complete network analysis schedule and obtain acceptance prior to starting construction work. Submit three copies of the diagrams described in the paragraph entitled "Diagrams" and the reports listed in the paragraph entitled "Required Tabular Reports". As part of this submittal, provide the Project Name format (and Project Group Name if used) that will be used by the Contractor to identify initial schedule submittals, updates, fragnets, changes, etc. Include 1 copy of the Construction Network Analysis Schedule on electronic media that is acceptable to the Contracting Officer.

1.7.3 Review and Evaluation

After the Government's review(s) of the Construction Network Analysis Schedule, the Contractor shall meet with the Contracting Officer to discuss the review and evaluation of the NAS submittal. Revisions necessary as a result of this review shall be resubmitted for acceptance within 10 calendar days after the meeting.

1.7.4 Baseline Network Analysis Schedule

Once review comments are resolved and the Contracting Officer has accepted the Construction Network Analysis Schedule, the Contractor shall within 5 calendar days furnish:

a. Two copies of the network diagrams.

b. Two copies of the reports listed in paragraph entitled "Required Tabular Reports".

c. Two copies of the Cash Flow S-Curve indicating the cash flow based upon both the projected early and late finish dates.

d. Two sets of data disks containing the project schedule shall be provided for the each Baseline submission and every periodic project update. Data shall be submitted on electronic media that is acceptable to the Contracting Officer. A permanent exterior label shall be affixed to each disk submitted. The label shall indicate the type of schedule (Construction NAS, Baseline, Update, Recovery, Time Impact Analysis (PC#), etc.), full contract number, Project Name used to identify project in scheduling software, contract name & location, data status date, diskette number with total number of diskettes in set, software name and version used to run the schedule, and the name and telephone number of person responsible for the schedule.

For major revisions, updates or changes to the network diagrams, once accepted by the Contracting Officer, the Contractor shall submit these same diagrams and reports.

1.7.5 Monthly Network Analysis Updates

At monthly intervals the Contractor and Government representatives will meet to jointly update the project schedule and agree on percentage of payment for each activity progressed during the update period. The purpose of the meeting is to determine progress payment amounts for each activity, allow all parties to evaluate project status at the data date, provide a complete and accurate update of procurement and construction progress, create an historical record of the project and establish prediction of completion date(s) based upon current status. The Contractor is responsible to gather all supporting documentation, present the update data for the schedule and record the meeting minutes. All progress payment amounts will be derived from and tied to the cost-loaded schedule activities. Submit at monthly intervals a report of the actual construction progress by updating the required reports and the time scaled logic diagram. Meeting to update the schedule and the submission of an error free, acceptable updated schedule to the Government is a condition precedent to the processing of the Contractor's pay request. As a minimum, the following actions will be accomplished during the meeting:

a. Identify activities started and completed during the previous period and enter the Actual Start and Actual Finish dates. It will be understood that Actual Start is defined as the date that work begins on an activity with the intent to pursue the work represented by the activity to substantial completion, and Actual Finish is defined as the date that the activity's work is substantially complete to the point that its successor activity(s) may begin.

b. Show estimated duration (in workdays) to complete each activity started but not completed (remaining duration).

c. Indicate percentage of cost payable and percent of work complete as separate and independent entries for each activity. The assignment of an Actual Finish date to an activity does not imply that the activity's percent of payment will be statused to 100 percent.

d. Reflect changes in the network diagram. All changes (i.e., remaining duration changes, logic changes, new logic, conformed change orders, new activities, changes due to Conformed Modifications, changes in work sequence, entry of as-built relationship logic, etc.) shall be recorded

and a note added to the activity log field. The log shall include as a minimum, the date and reason for the change, and description of the change.

e. Submit two copies of a Narrative Report describing: 1) Progress made in each area of the project; 2) Changes in the following; activities, original durations, logic interdependencies, milestones, planned sequence of operations, critical path, and resource and loading; 3) Pending items and status thereof, including permits, change orders, and time extensions; 4) Status of Contract Completion Date and interim milestones; 5) Current and anticipated delays (describe cause of the delay and corrective action(s)); and 6) Description of current and future schedule problem areas. Each entry in the narrative report will cite the respective Activity ID and Activity Description.

f. Submit two copies of the reports listed in paragraph entitled "Required Tabular Reports".

g. Two hard copies of the network diagrams and two sets of data disks.

h. Submit two copies of the Update Meeting minutes.

1.7.6 Summary Network

A summary network shall have the same network format as the Baseline Network Analysis Schedule. The summary network will contain a minimal number of activities that represent the general approach of work sequence. The Summary will be a time-scaled logical sequence of Phase Code and Area Code. The Contractor shall submit a summary network diagram along with the Baseline Network Analysis Schedule. A summary network update shall be submitted every 3 months during the contract duration and immediately following acceptance of each major schedule change. Submit the following:

a. Two copies of the summary network diagram.

b. Two copies of the Activity ID Report.

c. Two copies of the Total Float Report.

d. Two copies of the Earned Value Report indicating the actual cash flow for the current updated (not summary) network based upon both the early and late start schedules.

1.7.7 As-Built Schedule

As a condition precedent to the release of retention and making final payment, the Contractor shall submit an "As-Built Schedule", which is the last schedule update. The As-Built Schedule shall reflect the exact manner in which the project was actually constructed (including actual start and finish dates, activities, sequences, and logic) and shall be certified by the Contractor's Project Manager and Construction Scheduler as being a true reflection of the way the project was actually constructed. If more than one person filled the position(s) during the course of the project, each person will provide certification for the period of time they were responsible.

1.8 CONTRACT MODIFICATION

When a contract modification to the work is required, submit proposed

revisions to the network with a fragnet and a cost proposal for each proposed change. All modifications shall be incorporated into the network analysis system as separate identifiable activities broken down and inserted appropriately on the first update following issuance of a directive to proceed with the change. Submit two copies of the Total Float Report, Log Report and a copy of the proposed Time Impact Analysis on disk, with the cost proposal. Unless the Contracting Officer requests otherwise, only conformed contract modification fragnets will be added into the subsequent monthly updates. All revisions to the current baseline schedule activities that are necessary to further refine the schedule so that the changed work activities can be logically tied to the schedule shall be made. Financial data shall not be incorporated into the schedule until the Contracting Officer signs the contract modification.

1.8.1 Time Impact Analysis:

The Time Impact Analysis method shall be used by the Contracting Officer and Contractor in determining if a time extension or reduction to the contract milestone date(s) is justified. The Contractor shall provide a Time Impact Analysis to the Contracting Officer for any proposed contract change or as support for a Value Engineering Proposal, Variance Request, Claim or Request for Equitable Adjustment by the Contractor. Submit the Time Impact Analysis schedule, reports, etc. on disk and as a printed/plotted hardcopy.

a. The Contractor shall submit a Time Impact Analysis (TIA) illustrating the influence of each change or delay on the Contract Completion Date or milestones. Unless the Contracting Officer requests an interim update to the schedule, the current monthly updated schedule accepted by the Government shall be used to display the impacts of the change. Unless requested by the Contracting Officer, no other non-conformed changes will be incorporated into the schedule being used to justify the change impact.

b. Each TIA shall include a Fragmentary Network (fragnet) demonstrating how the Contractor proposes to incorporate the impact into the project schedule. A fragnet is defined as the sequence of new activities and/or activity revisions, logic relationships and resource changes that are proposed to be added to the existing schedule to demonstrate the influence of impacts to the schedule. The fragnet shall identify the predecessors to the new activities and demonstrate the impacts to successor activities. The Contractor shall provide a hardcopy printout of the fragnet activities and relationships being added and also insert the fragnet into the most current, accepted Monthly Network Analysis Update, run the schedule calculations and submit the impacted schedule with the proposal, claim, etc. Include a narrative report describing the effects of new activities and relationships to interim and contract completion dates, with each TIA. Submit time extension requests with a Time Impact Analysis and three hard copies of the fragnet (in a graphic format), impacted schedule (with fragnet loaded), Total Float Report, Narrative Report and Log Report.

c. Following the Contractor's receipt of a contract modification on a Standard Form 30 signed by the Government; all changes in the fragnet used to determine impacts, shall be incorporated into the schedule. Changes to the schedule will occur during the next monthly schedule update meeting.

1.8.2 No Reservation-Of-Rights

All direct costs, indirect costs, and time extensions will be negotiated and made full, equitable and final at the time of modification issuance.

1.9 CHANGES TO THE NETWORK ANALYSIS SCHEDULE

If changes in the method of operating and scheduling are desired, the Contracting Officer shall be notified in writing stating the reasons for the change. If the Contracting Officer considers these changes to be of a major nature, the Contractor may be required to revise and submit for acceptance, without additional cost to the Government, the network diagrams and required reports. A change may be considered of a major nature if the estimated time required or actually used for an activity or the network logic has varied from the original plan to a degree that there is a reasonable doubt as to the effect on the contract completion date(s) or phase completion dates. Changes that affect activities with adequate float time shall be considered a major change when their cumulative effect could extend the contract completion date.

1.10 FLOAT

Use of float suppression techniques, such as; preferential sequencing (arranging critical path through activities more susceptible to Government caused delay), lag logic restraints, zero total or free float constraints, extended activity times, or imposing constraint dates other than as required by the contract, shall be cause for rejection of the project schedule or its updates. The use of Resource Leveling (or similar software features) used for the purpose of artificially adjusting activity durations to consume float and influence the critical path is expressly prohibited.

1.10.1 Definitions of Float

Free Float is the length of time the start of an activity can be delayed without delaying the start of a successor activity. Total Float is the length of time along a given network path that the actual start and finish of activity(s) can be delayed without delaying the project completion date. Project Float is the length of time between the Contractor's Early Completion (or Substantial Completion or similar activity) and the Contract Completion Date.

1.10.2 Ownership of Float

Float available in the schedule, at any time shall not be considered for the exclusive use of either the Government or the Contractor. During the course of contract execution, any float generated due to the efficiencies of either party is not for the sole use of the party generating the float; rather it is a shared commodity to be reasonably used by either party. Efficiencies gained as a result of favorable weather within a calendar month, where the number of days of normally anticipated weather is less than expected, will also contribute to the reserve of float. A schedule showing work completing in less time than the Contract time, and accepted by the Government, will be considered to have Project Float. Project Float will be a resource available to both the Government and the Contractor. No time extensions will be granted nor delay damages paid unless a delay occurs which impacts the Project's critical path, consumes all available float or contingency time, and extends the work beyond the Contract Completion Date.

1.10.3 Negative Float

Negative float will not be a basis for requesting time extensions. Any extension of time will be addressed in accordance with the paragraphs entitled "CONTRACT MODIFICATION". Scheduled completion date(s) that extend beyond the contract completion date(s) (evidenced by negative float) may be used in computations for assessment of payment withholdings. The use of this computation is not to be construed as a means of acceleration.

1.11 THREE-WEEK LOOK AHEAD SCHEDULE

To provide a more detailed day-to-day planning of upcoming construction work, the Contractor shall prepare and issue detailed work plans that coordinate with and supplement the above defined network analysis. The work plans shall be keyed to the CPM activity numbers and shall be submitted each week and shall show the project activities that will occur during the current and following two-week interval. Additionally, the critical path activities are to be identified on the 3-Week Look Ahead Schedule. The schedule will be a bar chart type schedule prepared by the Contractor in sufficient detail to define the work to be accomplished, the crews, construction tools and equipment to be used during the current and next two-week interval. The bar charts shall be formatted to allow reproduction on 8 1/2 by 11 sheets. Three copies of the bar chart schedules shall be delivered to the Contracting Officer not less than 3 work hours prior to the start of the weekly coordination meeting on WebCM.

1.12 WEEKLY COORDINATION MEETING

In conjunction with the receipt of the 3-Week Look Ahead Schedule, a coordination meeting will be held each week to discuss the work schedule. The Contractor shall make a presentation of the previously submitted and current 3-Week Look Ahead Schedule to the Contracting Officer so as to provide an overview of the project's schedule and provide an opportunity to discuss items of coordination. Consideration of materials, crews, and equipment shall be addressed to ascertain their respective availability. The meeting shall identify actions necessary to provide adherence to the 3-Week Look Ahead Schedule and the overall network for the project defined above. The Contractor will take meeting minutes. All meeting minute entries will be keyed to the schedule activity number(s) being addressed. Within one day of the meeting, the Contractor will provide a draft copy of the meeting minutes to the Contracting Officer for review and comment. Final copies of the minutes containing the comments provided by the Contracting Officer will be issued within 3 days of the meeting.

1.13 CORRESPONDENCE AND TEST REPORTS

All correspondence (e.g., letters, Requests for Information (RFIs), e-mails, meeting minute items, Production and QC Daily Reports, material delivery tickets, photographs, etc.) shall reference the Schedule Activity Number(s) that are being addressed. All test reports (e.g., concrete, soil compaction, weld, pressure, etc.) shall reference the Schedule Activity Number(s) that are being addressed.

PART 2 PRODUCTS

Not used.

PART 3 EXECUTION

Not used.

-- End of Section --

SECTION 01 33 00

SUBMITTAL PROCEDURES
05/11

PART 1 GENERAL

1.1 SUMMARY

The Contracting Officer may request submittals in addition to those specified when deemed necessary to adequately describe the work covered in the respective sections.

Units of weights and measures used on all submittals are to be the same as those used in the contract drawings.

Each submittal is to be complete and in sufficient detail to allow ready determination of compliance with contract requirements.

Contractor's Quality Control (CQC) System Manager and the Designer of Record, if applicable, to check and approve all items prior to submittal and stamp, sign, and date indicating action taken. Proposed deviations from the contract requirements are to be clearly identified. Include within submittals items such as: Contractor's, manufacturer's, or fabricator's drawings; descriptive literature including (but not limited to) catalog cuts, diagrams, operating charts or curves; test reports; test cylinders; samples; O&M manuals (including parts list); certifications; warranties; and other such required submittals.

Submittals requiring Government approval are to be scheduled and made prior to the acquisition of the material or equipment covered thereby. Pick up and dispose of samples not incorporated into the work in accordance with manufacturer's Material Safety Data Sheets (MSDS) and in compliance with existing laws and regulations.

1.2 DEFINITIONS

1.2.1 Submittal Descriptions (SD)

Submittals requirements are specified in the technical sections. Submittals are identified by Submittal Description (SD) numbers and titles as follows:

SD-01 Preconstruction Submittals

Submittals which are required prior to issuance of contract notice to proceed commencing work on site submittals required prior to the start of the next major phase of the construction on a multi-phase contract, includes schedules, tabular list of data, or tabular list including location, features, or other pertinent information regarding products, materials, equipment, or components to be used in the work.

Certificates of insurance

Surety bonds

List of proposed Subcontractors

List of proposed products

Construction progress schedule

Network Analysis Schedule (NAS)

Submittal register

Schedule of prices

Health and safety plan

Work plan

Quality Control(QC) plan

Environmental protection plan

SD-02 Shop Drawings

Drawings, diagrams and schedules specifically prepared to illustrate some portion of the work.

Diagrams and instructions from a manufacturer or fabricator for use in producing the product and as aids to the Contractor for integrating the product or system into the project.

Drawings prepared by or for the Contractor to show how multiple systems and interdisciplinary work will be coordinated.

SD-03 Product Data

Catalog cuts, illustrations, schedules, diagrams, performance charts, instructions and brochures illustrating size, physical appearance and other characteristics of materials, systems or equipment for some portion of the work.

Samples of warranty language when the contract requires extended product warranties.

SD-06 Test Reports

Report signed by authorized official of testing laboratory that a material, product or system identical to the material, product or system to be provided has been tested in accord with specified requirements. (Testing must have been within three years of date of contract award for the project.)

Report which includes findings of a test required to be performed by the Contractor on an actual portion of the work or prototype prepared for the project before shipment to job site.

Report which includes finding of a test made at the job site or on sample taken from the job site, on portion of work during or after installation.

Investigation reports.

Daily logs and checklists.

Final acceptance test and operational test procedure.

SD-07 Certificates

Statements printed on the manufacturer's letterhead and signed by responsible officials of manufacturer of product, system or material attesting that product, system or material meets specification requirements. Must be dated after award of project contract and clearly name the project.

Document required of Contractor, or of a manufacturer, supplier, installer or Subcontractor through Contractor, the purpose of which is to further quality of orderly progression of a portion of the work by documenting procedures, acceptability of methods or personnel qualifications.

Confined space entry permits.

Text of posted operating instructions.

SD-08 Manufacturer's Instructions

Preprinted material describing installation of a product, system or material, including special notices and (MSDS)concerning impedances, hazards and safety precautions.

SD-10 Operation and Maintenance Data

Data that is furnished by the manufacturer, or the system provider, to the equipment operating and maintenance personnel, including manufacturer's help and product line documentation necessary to maintain and install equipment. This data is needed by operating and maintenance personnel for the safe and efficient operation, maintenance and repair of the item.

This data is intended to be incorporated in an operations and maintenance manual or control system.

SD-11 Closeout Submittals

Documentation to record compliance with technical or administrative requirements or to establish an administrative mechanism.

Special requirements necessary to properly close out a construction contract. For example, Record Drawings and as-built drawings. Also, submittal requirements necessary to properly close out a major phase of construction on a multi-phase contract.

1.2.2 Approving Authority

Office or designated person authorized to approve submittal.

1.2.3 Work

As used in this section, on- and off-site construction required by contract documents, including labor necessary to produce submittals, construction, materials, products, equipment, and systems incorporated or to be incorporated in such construction.

1.3 SUBMITTALS

Government approval is required for submittals with a "G" designation; submittals not having a "G" designation are for Contractor QC approval. Submit the following in accordance with this section.

SD-01 Preconstruction Submittals

Submittal Register; G

1.4 SUBMITTAL CLASSIFICATION

Submittals are classified as follows:

1.4.1 Designer of Record Approved (DA)

Designer of Record (DOR) approval is required for extensions of design, critical materials, any deviations from the solicitation, the accepted proposal, or the completed design, equipment whose compatibility with the entire system must be checked, and other items as designated by the Contracting Officer. Within the terms of the Contract Clause entitled, "Specifications and Drawings for Construction," they are considered to be "shop drawings." Contractor to provide the Government with the number of copies designated hereinafter of all DOR approved submittals. The Government may review any or all Designer of Record approved submittals for conformance to the Solicitation, Accepted Proposal and the completed design. The Government will review all submittals designated as deviating from the Solicitation or Accepted Proposal, as described below. Generally, design submittals should be identified as SD-05 Design Data submittals.

1.4.2 Government Approved

Government approval is required for extensions of design, critical materials, deviations, equipment whose compatibility with the entire system must be checked, and other items as designated by the Contracting Officer. Government approval is required for any deviations from the Solicitation or Accepted Proposal and other items as designated by the Contracting Officer. Within the terms of the Contract Clause entitled, "Specifications and Drawings for Construction," they are considered to be "shop drawings."

1.4.3 Government Conformance Review of Design (CR)

The Government will review all intermediate and final design submittals for conformance with the technical requirements of the solicitation. Review will be only for conformance with the applicable codes, standards and contract requirements. Generally, design submittals should be identified as SD-05 Design Data submittals.

1.4.4 Designer of Record Approved/Government Conformance Review (DA/CR)

1.4.4.1 Deviations to the Accepted Design

Designer of Record approval and the Government's concurrence are required for any proposed deviation from the accepted design which still complies with the contract before the Contractor is authorized to proceed with material acquisition or installation. Within the terms of the Contract Clause entitled, "Specifications and Drawings for Construction", they are considered to be "shop drawings." If necessary to facilitate the project

schedule, the Contractor and the DOR may discuss a submittal proposing a deviation with the Contracting Officer's Representative prior to officially submitting it to the Government. However, the Government reserves the right to review the submittal before providing an opinion, if deemed necessary. In any case, the Government will not formally agree to or provide a preliminary opinion on any deviation without the DOR's approval or recommended approval. The Government reserves the right to non-concur with any deviation from the design, which may impact furniture, furnishings, equipment selections or operations decisions that were made, based on the reviewed and concurred design.

1.4.4.2 Substitutions

Unless prohibited or provided for otherwise elsewhere in the Contract, where the accepted contract proposal named products, systems, materials or equipment by manufacturer, brand name and/or by model number or other specific identification, and the Contractor desires to substitute manufacturer or model after award, submit a requested substitution for Government concurrence. Include substantiation, identifying information and the DOR's approval, as meeting the contract requirements and that it is equal in function, performance, quality and salient features to that in the accepted contract proposal.

1.4.5 Designer of Record Approved/Government Approved (DA/GA)

In addition to the above stated requirements for proposed deviations to the accepted design, both Designer of Record and Government Approval and, where applicable, a contract modification are required before the Contractor is authorized to proceed with material acquisition or installation for any proposed variation to the contract (the solicitation and/or the accepted proposal), which constitutes a change to the contract terms. Within the terms of the Contract Clause entitled, "Specifications and Drawings for Construction," they are considered to be "shop drawings." The Government reserves the right to accept or reject any such proposed deviation at its discretion.

1.4.6 Information Only

Submittals not requiring Government approval will be for information only. For Design-build construction all submittals not requiring Designer of Record or Government approval will be for information only. They are not considered to be "shop drawings" within the terms of the Contract Clause referred to above.

1.5 FORWARDING SUBMITTALS REQUIRING GOVERNMENT APPROVAL

1.5.1 Submittals Required from the Contractor

As soon as practicable after award of contract, and before procurement of fabrication, forward to the Commander, NAVFAC Atlantic, Code CI4A1, 6506 Hampton Boulevard, Norfolk, Virginia, 23508-1278 and/or Architect-Engineer submittals required in the technical sections of this specification, including shop drawings, product data and samples. One copy of the transmittal form for all submittals shall be forwarded to the Resident Officer in Charge of Construction.

The Architect-Engineer for this project and/or NAVFAC Atlantic will review and approve for the Contracting Officer those submittals reserved for Contracting Officer approval to verify submittals comply with the contract

requirements.

Unless otherwise directed, submit all correspondence, submittal register, daily reports, submittals, and Requests for Information (RFI's) in PDF electronic format via e-mail or CD-ROM. Government e-mail services cannot receive attachments larger than 5 MB. All submittals smaller than 5 MB shall be submitted via e-mail. All submittals that are larger than 5 MB shall be submitted via CD-ROM or separated in parts smaller than 5 MB. All review comments, notations, and action items will be prescribed on the PDF submitted and returned electronically.

NOTE: Any submittal or shop drawing, which cannot be clearly read or defined on a 8 1/2 inch by 14 inch sheet of paper or is too large to send via e-mail shall be delivered by mail to all parties identified above. Submit paper copies in quantities and as directed in this specification section.

1.5.1.1 O&M Data

The Architect-Engineer for this project and/or NAVFAC Atlantic will review and approve for the Contracting Officer O&M Data to verify the submittals comply with the contract requirements; submit data specified for a given item within 30 calendar days after the item is delivered to the contract site.

In the event the Contractor fails to deliver O&M Data within the time limits specified, the Contracting Officer may withhold from progress payments 50 percent of the price of the item with which such O&M Data are applicable.

1.5.1.2 Submittals Reserved for NAVFAC Atlantic Approval

As an exception to the standard submittal procedure specified above, submit the following to the Commander, NAVFAC Atlantic, Code CI4A1, 6506 Hampton Blvd, Norfolk, VA 23508-1278:

a. All Pile driving records

b. All fire protection system submittals

c. All fire alarm system submittals

d. Section 26 12 19.10 THREE-PHASE PAD-MOUNTED TRANSFORMERS: All submittals

1.6 PREPARATION

1.6.1 Transmittal Form

Transmit each submittal, except sample installations and sample panels to office of approving authority. Transmit submittals with transmittal form prescribed by Contracting Officer and standard for project. On the transmittal form identify Contractor, indicate date of submittal, and include information prescribed by transmittal form and required in paragraph entitled, "Identifying Submittals," of this section. Process transmittal forms to record actions regarding samples, installations, and/or panels.

1.6.2 Identifying Submittals

When submittals are provided by a Subcontractor, the Prime Contractor is to prepare, review and stamp with Contractor's approval all specified submittals prior to submitting for Government approval.

Identify submittals, except sample installations and sample panels, with the following information permanently adhered to or noted on each separate component of each submittal and noted on transmittal form. Mark each copy of each submittal identically, with the following:

a. Project title and location.

b. Construction contract number.

c. Date of the drawings and revisions.

d. Name, address, and telephone number of subcontractor, supplier, manufacturer and any other subcontractor associated with the submittal.

e. Section number of the specification section by which submittal is required.

f. Submittal description (SD) number of each component of submittal.

g. When a resubmission, add alphabetic suffix on submittal description, for example, submittal 18 would become 18A, to indicate resubmission.

h. Product identification and location in project.

1.6.3 Format for SD-02 Shop Drawings

a. Shop drawings are not to be less than 8 1/2 by 11 inches nor more than 30 by 42 inches, except for full size patterns or templates. Prepare drawings to accurate size, with scale indicated, unless other form is required. Drawings are to be suitable for reproduction and be of a quality to produce clear, distinct lines and letters with dark lines on a white background.

b. Present 8 1/2 by 11 inches sized shop drawings as part of the bound volume for submittals required by section. Present larger drawings in sets.

c. Include on each drawing the drawing title, number, date, and revision numbers and dates, in addition to information required in paragraph entitled, "Identifying Submittals," of this section.

d. Number drawings in a logical sequence. Contractors may use their own number system. Each drawing is to bear the number of the submittal in a uniform location adjacent to the title block. Place the Government contract number in the margin, immediately below the title block, for each drawing.

e. Reserve a blank space, no smaller than 2 inches on the right hand side of each sheet for the Government disposition stamp.

f. Dimension drawings, except diagrams and schematic drawings; prepare drawings demonstrating interface with other trades to scale. Use the same unit of measure for shop drawings as indicated on the contract

drawings. Identify materials and products for work shown.

g. Include the nameplate data, size and capacity on drawings. Also include applicable federal, military, industry and technical society publication references.

1.6.4 Format of SD-03 Product Data and SD-08 Manufacturer's Instructions

a. Present product data submittals for each section as a complete, bound volume. Include table of contents, listing page and catalog item numbers for product data.

b. Indicate, by prominent notation, each product which is being submitted; indicate specification section number and paragraph number to which it pertains.

c. Supplement product data with material prepared for project to satisfy submittal requirements for which product data does not exist. Identify this material as developed specifically for project, with information and format as required for submission of SD-07 Certificates.

d. Include the manufacturer's name, trade name, place of manufacture, and catalog model or number on product data. Also include applicable federal, military, industry and technical society publication references. Should manufacturer's data require supplemental information for clarification, submit as specified for SD-07 Certificates.

e. Where equipment or materials are specified to conform to industry and technical society reference standards of the organizations such as American National Standards Institute (ANSI), ASTM International (ASTM), National Electrical Manufacturer's Association (NEMA), Underwriters Laboratories (UL), and Association of Edison Illuminating Companies (AEIC), submit proof of such compliance. The label or listing by the specified organization will be acceptable evidence of compliance. In lieu of the label or listing, submit a certificate from an independent testing organization, competent to perform testing, and approved by the Contracting Officer. State on the certificate that the item has been tested in accordance with the specified organization's test methods and that the item complies with the specified organization's reference standard.

f. Collect required data submittals for each specific material, product, unit of work, or system into a single submittal and marked for choices, options, and portions applicable to the submittal. Mark each copy of the product data identically. Partial submittals will not be accepted for expedition of construction effort.

g. Submit manufacturer's instructions prior to installation.

1.6.5 Format of SD-04 Samples

Furnish samples in sizes below, unless otherwise specified or unless the manufacturer has prepackaged samples of approximately same size as specified:

a. Sample of Equipment or Device: Full size.

b. Sample of Materials Less Than 2 by 3 inches: Built up to 8 1/2 by 11

inches.

c. Sample of Materials Exceeding 8 1/2 by 11 inches: Cut down to 8 1/2 by 11 inches and adequate to indicate color, texture, and material variations.

d. Sample of Linear Devices or Materials: 10 inch length or length to be supplied, if less than 10 inches. Examples of linear devices or materials are conduit and handrails.

e. Sample of Non-Solid Materials: Pint. Examples of non-solid materials are sand and paint.

f. Color Selection Samples: 2 by 4 inches. Where samples are specified for selection of color, finish, pattern, or texture, submit the full set of available choices for the material or product specified. Sizes and quantities of samples are to represent their respective standard unit.

g. Sample Panel: 4 by 4 feet.

h. Sample Installation: 100 square feet.

Samples Showing Range of Variation: Where variations in color, finish, pattern, or texture are unavoidable due to nature of the materials, submit sets of samples of not less than three units showing extremes and middle of range. Mark each unit to describe its relation to the range of the variation.

Reusable Samples: Incorporate returned samples into work only if so specified or indicated. Incorporated samples are to be in undamaged condition at time of use.

Recording of Sample Installation: Note and preserve the notation of area constituting sample installation but remove notation at final clean up of project.

When color, texture or pattern is specified by naming a particular manufacturer and style, include one sample of that manufacturer and style, for comparison.

1.6.6 Format of SD-05 Design Data and SD-07 Certificates

Provide design data and certificates on 8 1/2 by 11 inches paper. Provide a bound volume for submittals containing numerous pages.

1.6.7 Format of SD-06 Test Reports and SD-09 Manufacturer's Field Reports

Provide reports on 8 1/2 by 11 inches paper in a complete bound volume.

Indicate by prominent notation, each report in the submittal. Indicate specification number and paragraph number to which it pertains.

1.6.8 Format of SD-10 Operation and Maintenance Data (O&M)

Comply with the requirements specified in Section 01 78 23 OPERATION AND MAINTENANCE DATA for O&M Data format.

1.6.9 Format of SD-01 Preconstruction Submittals and SD-11 Closeout Submittals

When submittal includes a document which is to be used in project or become part of project record, other than as a submittal, do not apply Contractor's approval stamp to document, but to a separate sheet accompanying document.

1.7 QUANTITY OF SUBMITTALS

1.7.1 Number of Copies of SD-02 Shop Drawings

Submit six copies of submittals of shop drawings requiring review and approval only by QC organization and seven copies of shop drawings requiring review and approval by Contracting Officer.

1.7.2 Number of Copies of SD-03 Product Data and SD-08 Manufacturer's Instructions

Submit in compliance with quantity requirements specified for shop drawings.

1.7.3 Number of Samples SD-04 Samples

a. Submit two samples, or two sets of samples showing range of variation, of each required item. One approved sample or set of samples will be retained by approving authority and one will be returned to Contractor.

b. Submit one sample panel or provide one sample installation where directed. Include components listed in technical section or as directed.

c. Submit one sample installation, where directed.

d. Submit one sample of non-solid materials.

1.7.4 Number of Copies SD-05 Design Data and SD-07 Certificates

Submit in compliance with quantity requirements specified for shop drawings.

1.7.5 Number of Copies SD-06 Test Reports and SD-09 Manufacturer's Field Reports

Submit in compliance with quantity and quality requirements specified for shop drawings other than field test results that will be submitted with QC reports.

1.7.6 Number of Copies of SD-10 Operation and Maintenance Data

Submit three copies of O&M Data to the Contracting Officer for review and approval.

1.7.7 Number of Copies of SD-01 Preconstruction Submittals and SD-11 Closeout Submittals

Unless otherwise specified, submit three sets of administrative submittals.

1.8 VARIATIONS

Variations from contract requirements require both Designer of Record (DOR)

and Government approval pursuant to contract Clause FAR 52.236-21 and will be considered where advantageous to Government.

1.8.1 Considering Variations

Discussion with Contracting Officer prior to submission, after consulting with the DOR, will help ensure functional and quality requirements are met and minimize rejections and re-submittals. When contemplating a variation which results in lower cost, consider submission of the variation as a Value Engineering Change Proposal (VECP).

Specifically point out variations from contract requirements in transmittal letters. Failure to point out deviations may result in the Government requiring rejection and removal of such work at no additional cost to the Government.

1.8.2 Proposing Variations

When proposing variation, deliver written request to the Contracting Officer, with documentation of the nature and features of the variation and why the variation is desirable and beneficial to Government, including the DOR's written analysis and approval. If lower cost is a benefit, also include an estimate of the cost savings. In addition to documentation required for variation, include the submittals required for the item. Clearly mark the proposed variation in all documentation.

1.8.3 Warranting That Variations Are Compatible

When delivering a variation for approval, Contractor, including its Designer(s) of Record, warrants that this contract has been reviewed to establish that the variation, if incorporated, will be compatible with other elements of work.

1.8.4 Review Schedule Is Modified

In addition to normal submittal review period, a period of 10 working days will be allowed for consideration by the Government of submittals with variations.

1.9 SUBMITTAL REGISTER AND DATABASE

Prepare and maintain submittal register, as the work progresses. Use electronic submittal register program furnished by the Government or any other format. Do not change data which is output in columns (c), (d), (e), and (f) as delivered by Government; retain data which is output in columns (a), (g), (h), and (i) as approved. A submittal register showing items of equipment and materials for which submittals are required by the specifications is provided as an attachment. This list may not be all inclusive and additional submittals may be required. Maintain a submittal register for the project in accordance with Section 01 45 00.00 20 QUALITY CONTROL.

Column (c): Lists specification section in which submittal is required.

Column (d): Lists each submittal description (SD No. and type, e.g. SD-02 Shop Drawings) required in each specification section.

Column (e): Lists one principal paragraph in specification

section where a material or product is specified. This listing is only to facilitate locating submitted requirements. Do not consider entries in column (e) as limiting project requirements.

Column (f): Indicate approving authority for each submittal.

The database and submittal management program will be furnished to Contractor on a Writable Compact Disk (CD-R), for operation on Windows based personal computer.

Thereafter, the Contractor is to track all submittals by maintaining a complete list, including completion of all data columns, including dates on which submittals are received and returned by the Government.

1.9.1 Use of Submittal Register

Submit submittal register as an electronic database, using submittals management program furnished to Contractor. Submit with QC plan and project schedule. Verify that all submittals required for project are listed and add missing submittals. Coordinate and complete the following fields on the register database submitted with the QC plan and the project schedule:

Column (a) Activity Number: Activity number from the project schedule.

Column (g) Contractor Submit Date: Scheduled date for approving authority to receive submittals.

Column (h) Contractor Approval Date: Date Contractor needs approval of submittal.

Column (i) Contractor Material: Date that Contractor needs material delivered to Contractor control.

1.9.2 Contractor Use of Submittal Register

Update the following fields with each submittal throughout contract.

Column (b) Transmittal Number: Contractor assigned list of consecutive numbers.

Column (j) Action Code (k): Date of action used to record Contractor's review when forwarding submittals to QC.

Column (l) List date of submittal transmission.

Column (q) List date approval received.

1.9.3 Approving Authority Use of Submittal Register

Update the following fields.

Column (b) Transmittal Number: Contractor assigned list of consecutive numbers.

Column (l) List date of submittal receipt.

Column (m) through (p) List Date related to review actions.

Column (q) List date returned to Contractor.

1.9.4 Action Codes

Entries for columns (j) and (o), are to be used are as follows (others may be prescribed by Transmittal Form):

1.9.4.1 Government Review Action Codes

"A" - "Approved as submitted"; "Completed"

"B" - "Approved, except as noted on drawings"; "Completed"

"C" - "Approved, resubmission required"; "Resubmit"

"D" - "Returned by correspondence"; "Completed"

"E" - "Disapproved (See attached)"; "Resubmit"

"F" - "Receipt acknowledged"; "Completed"

"G" - "Other (Specify)"; "Resubmit"

"X" - "Receipt acknowledged, does not comply"; "Resubmit"

1.9.4.2 Contractor Action Codes

NR - Not Received

AN - Approved as noted

A - Approved

RR - Disapproved, Revise, and Resubmit

1.9.5 Copies Delivered to the Government

Deliver one copy of submittal register updated by Contractor to Government with each invoice request. Deliver in electronic format, unless a paper copy is requested by Contracting Officer.

1.10 SCHEDULING

Schedule and submit concurrently submittals covering component items forming a system or items that are interrelated. Include certifications to be submitted with the pertinent drawings at the same time. No delay damages or time extensions will be allowed for time lost in late submittals.

a. Coordinate scheduling, sequencing, preparing and processing of submittals with performance of work so that work will not be delayed by submittal processing. Allow for potential resubmittal of requirements.

b. Submittals called for by the contract documents will be listed on the register. If a submittal is called for but does not pertain to the contract work, the Contractor is to include the submittal in the register and annotate it "N/A" with a brief explanation. Approval by the Contracting Officer does not relieve the Contractor of supplying submittals required by the contract documents but which have been

omitted from the register or marked "N/A."

c. Re-submit register and annotate monthly by the Contractor with actual submission and approval dates. When all items on the register have been fully approved, no further re-submittal is required.

d. Carefully control procurement operations to ensure that each individual submittal is made on or before the Contractor scheduled submittal date shown on the approved "Submittal Register."

e. Except as specified otherwise, allow review period, beginning with receipt by approving authority, that includes at least 15 working days for submittals for QC Manager approval and 20 working days for submittals for Contracting Officer approval. Period of review for submittals with Contracting Officer approval begins when Government receives submittal from QC organization.

f. For submittals requiring review by fire protection engineer, allow review period, beginning when Government receives submittal from QC organization, of 30 working days for return of submittal to the Contractor.

g. Period of review for each resubmittal is the same as for initial submittal.

Within 30 calendar days of notice to proceed, provide, for approval by the Contracting Officer, the following schedule of submittals:

a. A schedule of shop drawings and technical submittals required by the specifications and drawings. Indicate the specification or drawing reference requiring the submittal; the material, item, or process for which the submittal is required; the "SD" number and identifying title of the submittal; the Contractor's anticipated submission date and the approval need date.

b. A separate schedule of other submittals required under the contract but not listed in the specifications or drawings. Schedule will indicate the contract requirement reference; the type or title of the submittal; the Contractor's anticipated submission date and the approved need date (if approval is required).

1.10.1 Reviewing, Certifying, Approving Authority

The QC organization is responsible for reviewing and certifying that submittals are in compliance with contract requirements. Approving authority on submittals is QC Manager unless otherwise specified for specific submittal. At each "Submittal" paragraph in individual specification sections, a notation "G," following a submittal item, indicates Contracting Officer is approving authority for that submittal item.

1.10.2 Constraints

Conform to provisions of this section, unless explicitly stated otherwise for submittals listed or specified in this contract.

Submit complete submittals for each definable feature of work. Submit at the same time components of definable feature interrelated as a system.

When acceptability of a submittal is dependent on conditions, items, or materials included in separate subsequent submittals, submittal will be returned without review.

Approval of a separate material, product, or component does not imply approval of assembly in which item functions.

1.10.3 QC Organization Responsibilities

a. Note date on which submittal was received from Contractor on each submittal.

b. Review each submittal; and check and coordinate each submittal with requirements of work and contract documents.

c. Review submittals for conformance with project design concepts and compliance with contract documents.

d. Act on submittals, determining appropriate action based on QC organization's review of submittal.

   1. When QC Manager is approving authority, take appropriate action on submittal from the possible actions defined in paragraph entitled, "Approved/Accepted Submittals," of the section."

   2. When Contracting Officer is approving authority or when variation has been proposed, forward submittal to Government with certifying statement or return submittal marked "not reviewed" or "revise and resubmit" as appropriate. The QC organization's review of submittal determines appropriate action.

e. Ensure that material is clearly legible.

f. Stamp each sheet of each submittal with QC certifying statement or approving statement, except that data submitted in bound volume or on one sheet printed on two sides may be stamped on the front of the first sheet only.

   1. When approving authority is Contracting Officer, QC organization will certify submittals forwarded to Contracting Officer with the following certifying statement:

"I hereby certify that the (equipment) (material) (article) shown and marked in this submittal is that proposed to be incorporated with contract Number _____, is in compliance with the contract drawings and specification, can be installed in the allocated spaces, and is submitted for Government approval.

Certified by Submittal Reviewer _____, Date _____
(Signature when applicable)

Certified by QC Manager _____, Date _____"
(Signature)

   2. When approving authority is QC Manager, QC Manager will use the following approval statement when returning submittals to Contractor as "Approved" or "Approved as Noted."

"I hereby certify that the (material) (equipment) (article) shown and

marked in this submittal and proposed to be incorporated with contract Number _____, is in compliance with the contract drawings and specification, can be installed in the allocated spaces, and is approved for use.

Certified by Submittal Reviewer _____, Date _____
(Signature when applicable)

Approved by QC Manager _____, Date _____"
(Signature)

g. Sign certifying statement or approval statement. The QC organization member designated in the approved QC plan is the person signing certifying statements. The use of original ink for signatures is required. Stamped signatures are not acceptable.

h. Update submittal register as submittal actions occur and maintain the submittal register at project site until final acceptance of all work by Contracting Officer.

i. Retain a copy of approved submittals at project site, including Contractor's copy of approved samples.

1.11 GOVERNMENT APPROVING AUTHORITY

When approving authority is Contracting Officer, the Government will:

a. Note date on which submittal was received from QC Manager.

b. Review submittals for approval within scheduling period specified and only for conformance with project design concepts and compliance with contract documents.

c. Identify returned submittals with one of the actions defined in paragraph entitled, "Review Notations," of this section and with markings appropriate for action indicated.

Upon completion of review of submittals requiring Government approval, stamp and date approved submittals. Two copies of the approved submittal will be retained by the Contracting Officer and four copies of the submittal will be returned to the Contractor. If the Government performs a conformance review of other Designer of Record approved submittals, the submittals will be so identified and returned, as described above.

1.11.1 Review Notations

Contracting Officer review will be completed within 15 calendar days after date of submission. Submittals will be returned to the Contractor with the following notations:

a. Submittals marked "approved" or "accepted" authorize the Contractor to proceed with the work covered.

b. Submittals marked "approved as noted" "or approved except as noted, resubmittal not required," authorize the Contractor to proceed with the work covered provided he takes no exception to the corrections.

c. Submittals marked "not approved" or "disapproved," or "revise and resubmit," indicate noncompliance with the contract requirements or

design concept, or that submittal is incomplete. Resubmit with appropriate changes. No work shall proceed for this item until resubmittal is approved.

d. Submittals marked "not reviewed" will indicate submittal has been previously reviewed and approved, is not required, does not have evidence of being reviewed and approved by Contractor, or is not complete. A submittal marked "not reviewed" will be returned with an explanation of the reason it is not reviewed. Resubmit submittals returned for lack of review by Contractor or for being incomplete, with appropriate action, coordination, or change.

1.12 DISAPPROVED OR REJECTED SUBMITTALS

Contractor shall make corrections required by the Contracting Officer. If the Contractor considers any correction or notation on the returned submittals to constitute a change to the contract drawings or specifications; notice as required under the clause entitled, "Changes," is to be given to the Contracting Officer. Contractor is responsible for the dimensions and design of connection details and construction of work. Failure to point out deviations may result in the Government requiring rejection and removal of such work at the Contractor's expense.

If changes are necessary to submittals, the Contractor shall make such revisions and submission of the submittals in accordance with the procedures above. No item of work requiring a submittal change is to be accomplished until the changed submittals are approved.

1.13 APPROVED/ACCEPTED SUBMITTALS

The Contracting Officer's approval or acceptance of submittals is not to be construed as a complete check, and indicates only that the general method of construction, materials, detailing and other information are satisfactory. design, general method of construction, materials, detailing and other information appear to meet the Solicitation and Accepted Proposal.

Approval or acceptance will not relieve the Contractor of the responsibility for any error which may exist, as the Contractor under the Contractor Quality Control (CQC) requirements of this contract is responsible for dimensions, the design of adequate connections and details, and the satisfactory construction of all work.

After submittals have been approved or accepted by the Contracting Officer, no resubmittal for the purpose of substituting materials or equipment will be considered unless accompanied by an explanation of why a substitution is necessary.

1.14 APPROVED SAMPLES

Approval of a sample is only for the characteristics or use named in such approval and is not be construed to change or modify any contract requirements. Before submitting samples, the Contractor to assure that the materials or equipment will be available in quantities required in the project. No change or substitution will be permitted after a sample has been approved.

Match the approved samples for materials and equipment incorporated in the work. If requested, approved samples, including those which may be damaged in testing, will be returned to the Contractor, at his expense, upon

completion of the contract. Samples not approved will also be returned to the Contractor at its expense, if so requested.

Failure of any materials to pass the specified tests will be sufficient cause for refusal to consider, under this contract, any further samples of the same brand or make of that material. Government reserves the right to disapprove any material or equipment which previously has proved unsatisfactory in service.

Samples of various materials or equipment delivered on the site or in place may be taken by the Contracting Officer for testing. Samples failing to meet contract requirements will automatically void previous approvals. Contractor to replace such materials or equipment to meet contract requirements.

Approval of the Contractor's samples by the Contracting Officer does not relieve the Contractor of his responsibilities under the contract.

1.15 WITHHOLDING OF PAYMENT

Payment for materials incorporated in the work will not be made if required approvals have not been obtained. No payment for materials incorporated in the work will be made if all required Designer of Record or required Government approvals have not been obtained. No payment will be made for any materials incorporated into the work for any conformance review submittals or information only submittals found to contain errors or deviations from the Solicitation or Accepted Proposal.

1.16 PROGRESS SCHEDULE

1.16.1 Project Network Analysis

Submit the initial progress schedule within 21 calendar days of notice to proceed. Schedule is to be updated and resubmitted monthly beginning 7 calendar days after return of the approved initial schedule. Updating to entail complete revision of the graphic and data displays incorporating changes in scheduled dates and performance periods. Redlined updates will only be acceptable for use as weekly status reviews.

Contractor to provide a single point contact from his on-site organization as his Schedule Specialist. Schedule Specialist is to have the responsibility of updating and coordinating the schedule with actual job conditions. Schedule Specialist to participate in weekly status meetings and present current information on the status of purchase orders, shop drawings, off-site fabrication, materials deliveries, Subcontractor activities, anticipated needs for Government furnished equipment, and any problem which may impact the contract performance period.

Include the following in the project network analysis:

a. Graphically display with the standard network or arrow diagram capable of illustrating the required data. Drafting to be computer generated on standard 24 by 36 inch (nominal size) drafting sheets or on small 11 by 17 inch minimum sheets with separate overview and detail breakouts. Provide a project network analysis that is legible with a clear, consistent method for continuations and detail referencing. Clearly delineate the critical path on the display. Clearly indicate the contract milestone date on the project network analysis graphic display.

b. Data is to be presented as a separate printout on paper or, where feasible, may be printed on the same sheet as the graphic display. Data is to be organized in a logical coherent display capable of periodic updating.

c. Include within the data verbal activity descriptions with a numerical ordering system cross referenced to the graphic display. Additionally, costs (broken down into separate materials and costs), duration, early start date, early finish date, late start date, late finish date, and float are to be detailed for each activity. A running total of the percent completion based on completed activity costs versus total contract cost is to be indicated. A system for indicating scheduled versus actual activity dates and durations is also to be provided.

d. Sufficient detail to facilitate the Contractor's control of the job and to allow the Contracting Officer to readily follow progress for portions of the work should be shown within the schedule.

1.17 STATUS REPORT ON MATERIALS ORDERS

Within 30 calendar days after notice to proceed, submit, for approval by the Contracting Officer, an initial material status report on all materials orders. This report will be updated and re-submitted every 30 calendar days as the status on material orders changes.

Report to include list, in chronological order by need date, materials orders necessary for completion of the contract. The following information will be required for each material order listed:

a. Material name, supplier, and invoice number.

b. Bar chart line item or CPM activity number affected by the order.

c. Delivery date needed to allow directly and indirectly related work to be completed within the contract performance period.

d. Current delivery date agreed on by supplier.

e. When item d exceeds item c, the effect that delayed delivery date will have on contract completion date.

f. When item d exceeds item c, a summary of efforts made by the Contractor to expedite the delayed delivery date to bring it in line with the needed delivery date, including efforts made to place the order (or subcontract) with other suppliers.

PART 2 PRODUCTS

Not Used

PART 3 EXECUTION

Not Used

-- End of Section --

SUBMITTAL REGISTER

CONTRACT NO.

TITLE AND LOCATION

P-1515 Replace and Alter Fuel Distribution Facilities

CONTRACTOR

ACTIVITY NO	TRANSMITTAL NO	SPEC SECT	DESCRIPTION ITEM SUBMITTED	PARAGRAPH #	CLASSIFICATION	GOVT OR A/E REVWR	CONTRACTOR: SCHEDULE DATES			CONTRACTOR ACTION			APPROVING AUTHORITY					MAILED TO CONTR/ DATE RCD FRM APPR AUTH	REMARKS
							SUBMIT	APPROVAL NEEDED BY	MATERIAL NEEDED BY	ACTION CODE	DATE OF ACTION	DATE FWD TO APPR AUTH/ DATE RCD FROM CONTR	DATE FWD TO OTHER REVIEWER	DATE RCD FROM OTH REVIEWER	ACTION CODE	DATE OF ACTION		
(a)	(b)	(c)	(d)	(e)	(f)		(g)	(h)	(i)	(j)	(k)	(l)	(m)	(n)	(o)	(p)	(q)	(r)
		01 11 00	SD-01 Preconstruction Submittals															
			Utility Outage Requests	1.8.1														
			Utility Connection Requests	1.8.1														
			Excavation Permits	1.8.2														
			Welding Permits	1.8.2														
		01 14 00	SD-01 Preconstruction Submittals															
			List of Contact Personnel	1.4.1.1	G													
		01 20 00.00 20	SD-01 Preconstruction Submittals															
			Schedule of Prices	1.3	G													
		01 30 00	SD-01 Preconstruction Submittals															
			List of Contact Personnel	1.3.1	G													
		01 32 17.00 20	SD-01 Preconstruction Submittals															
			Qualifications	1.5	G													
			Standard Activity ID Dictionary	1.6.2.3	G													
			Construction Network Analysis	1.7.2	G													
			Schedule															
			Baseline Network Analysis	1.7.4	G													
			Schedule															
			SD-07 Certificates															
			Monthly Network Analysis	1.7.5	G													
			Updates															
			Summary Network	1.6.2.1	G													
			Summary Network	1.7.6	G													
			SD-11 Closeout Submittals															
			As-Built Schedule	1.7.7	G													
		01 33 00	SD-01 Preconstruction Submittals															

SUBMITTAL REGISTER

CONTRACT NO.

TITLE AND LOCATION
P-1515 Replace and Alter Fuel Distribution Facilities

CONTRACTOR

ACTIVITY NO	TRANSMITTAL NO	SPEC SECT	DESCRIPTION ITEM SUBMITTED	PARAGRAPH #	CLASSIFICATION	GOVT OR A/E REVWR	CONTRACTOR: SCHEDULE DATES			CONTRACTOR ACTION			APPROVING AUTHORITY					
							SUBMIT	APPROVAL NEEDED BY	MATERIAL NEEDED BY	ACTION CODE	DATE OF ACTION	DATE FWD TO APPR AUTH/ DATE RCD FROM CONTR	DATE FWD TO OTHER REVIEWER	DATE RCD FROM OTH REVIEWER	ACTION CODE	DATE OF ACTION	MAILED TO CONTR/ DATE RCD FRM APPR AUTH	REMARKS
(a)	(b)	(c)	(d)	(e)	(f)		(g)	(h)	(i)	(j)	(k)	(l)	(m)	(n)	(o)	(p)	(q)	(r)
		01 33 00	Submittal Register	1.9	G													
		01 33 29.00 20	SD-01 Preconstruction Submittals															
			Preliminary Sustainability	1.4.1.1	G													
			Notebook Submittal															
			Preliminary High Performance	1.4.2.1	G													
			and Sustainable Building Checklist															
			SD-11 Closeout Submittals															
			Final Sustainability Notebook	1.4.1.1	G													
			Submittal															
			Final High Performance and	1.4.2.1	G													
			Sustainable Building															
			(HPSB/NSEDRC) Checklist															
		01 35 26	SD-01 Preconstruction Submittals															
			Accident Prevention Plan (APP)	1.7	G													
			Activity Hazard Analysis (AHA)	1.8	G													
			Crane Critical Lift Plan	1.7.1	G													
			Crane Operators	1.6.1.3	G													
			SD-06 Test Reports															
			Notifications and Reports	1.12														
			Accident Reports	1.12.2														
			Crane Reports	1.12.3														
			SD-07 Certificates															
			Confined Space Entry Permit	1.9														
			Hot work permit	1.9														
			Contractor Safety Self-Evaluation	1.4	G													
			Checklist															

SUBMITTAL REGISTER

CONTRACT NO.

TITLE AND LOCATION
P-1515 Replace and Alter Fuel Distribution Facilities

CONTRACTOR

ACTIVITY NO	TRANSMITTAL NO	SPEC SECT	DESCRIPTION ITEM SUBMITTED	PARAGRAPH #	CLASSIFICATION	GOVT OR A/E REVWR	CONTRACTOR: SCHEDULE DATES			CONTRACTOR ACTION			APPROVING AUTHORITY					
							SUBMIT	APPROVAL NEEDED BY	MATERIAL NEEDED BY	ACTION CODE	DATE OF ACTION	DATE FWD TO APPR AUTH/ DATE RCD FROM CONTR	DATE FWD TO OTHER REVIEWER	DATE RCD FROM OTH REVIEWER	ACTION CODE	DATE OF ACTION	MAILED TO CONTR/ DATE RCD FRM APPR AUTH	REMARKS
(a)	(b)	(c)	(d)	(e)	(f)		(g)	(h)	(i)	(j)	(k)	(l)	(m)	(n)	(o)	(p)	(q)	(r)
		01 35 26	Third Party Certification of	1.12.5														
			Barge-Mounted Mobile Cranes															
			Certificate of Compliance	1.12.4														
		01 35 40.00 20	SD-01 Preconstruction Submittals															
			Environmental Protection Plan	1.8	G													
			Instructor Qualifications	1.9.1														
			SD-06 Test Reports															
			Field Quality Control Reports	3.2														
			SD-07 Certificates															
			Environmental Regulatory	1.6														
			Requirements															
			SD-08 Manufacturer's Instructions															
			Material Safety Data Sheets	1.7.1														
			SD-11 Closeout Submittals															
			Training Program	1.9.3														
			Protection of Natural Resources	3.1														
		01 45 00.00 20	SD-01 Preconstruction Submittals															
			Construction Quality Control (QC)	1.6.1	G													
			Plan															
			SD-06 Test Reports															
			Weekly written Reports	1.16.3	G													
			Post Pile Installation Inspection	1.5.6.1	G													
			Survey Report															
			Post Bent Cap Installation	1.5.6.2	G													
			Inspection Survey Report															
			SD-07 Certificates															

SUBMITTAL REGISTER

CONTRACT NO.

TITLE AND LOCATION
P-1515 Replace and Alter Fuel Distribution Facilities

CONTRACTOR

ACTIVITY NO	TRANSMITTAL NO	SPEC SECT	DESCRIPTION ITEM SUBMITTED	PARAGRAPH #	CLASSIFICATION	GOVT OR A/E REVWR	CONTRACTOR: SCHEDULE DATES			CONTRACTOR ACTION			APPROVING AUTHORITY					
							SUBMIT	APPROVAL NEEDED BY	MATERIAL NEEDED BY	ACTION CODE	DATE OF ACTION	DATE FWD TO APPR AUTH/ DATE RCD FROM CONTR	DATE FWD TO OTHER REVIEWER	DATE RCD FROM OTH REVIEWER	ACTION CODE	DATE OF ACTION	MAILED TO CONTR/ DATE RCD FRM APPR AUTH	REMARKS
(a)	(b)	(c)	(d)	(e)	(f)		(g)	(h)	(i)	(j)	(k)	(l)	(m)	(n)	(o)	(p)	(q)	(r)
		01 45 00.00 20	CA Resume	1.5.2.2														
			API Std 653 Certified Tank	1.5.5	G													
			Inspector															
			SD-10 Operation and Maintenance															
			Data															
			Training Plan	1.15.1														
			SD-11 Closeout Submittals															
			Concrete Repair	1.16.3	G													
			Training Outline	1.15.3	G													
			Video Recording	1.15.4	G													
			Validation of Training Completion	1.15.6	G													
		01 45 35	SD-07 Certificates															
			Special Inspector	1.5	G													
			Quality Control Plan	1.4	G													
		01 50 00	SD-01 Preconstruction Submittals															
			Construction site plan	1.4	G													
			Traffic control plan	3.3.1	G													
			SD-03 Product Data															
			Backflow preventers	1.5	G													
			SD-06 Test Reports															
			Backflow Preventer Tests	2.2.5	G													
			SD-07 Certificates															
			Backflow Tester	1.5.1	G													
			Backflow Preventers	1.5														
		01 57 19.00 20	SD-01 Preconstruction Submittals															
			Preconstruction Survey	1.5.1	G													

SUBMITTAL REGISTER

CONTRACT NO.

TITLE AND LOCATION
P-1515 Replace and Alter Fuel Distribution Facilities

CONTRACTOR

ACTIVITY NO	TRANSMITTAL NO	SPEC SECT	DESCRIPTION ITEM SUBMITTED	PARAGRAPH #	CLASSIFICATION	GOVT OR A/E REVWR	CONTRACTOR: SCHEDULE DATES			CONTRACTOR ACTION			APPROVING AUTHORITY					
							SUBMIT	APPROVAL NEEDED BY	MATERIAL NEEDED BY	ACTION CODE	DATE OF ACTION	DATE FWD TO APPR AUTH/ DATE RCD FROM CONTR	DATE FWD TO OTHER REVIEWER	DATE RCD FROM OTH REVIEWER	ACTION CODE	DATE OF ACTION	MAILED TO CONTR/ DATE RCD FRM APPR AUTH	REMARKS
(a)	(b)	(c)	(d)	(e)	(f)		(g)	(h)	(i)	(j)	(k)	(l)	(m)	(n)	(o)	(p)	(q)	(r)
		01 57 19.00 20	Solid Waste Management Plan	3.3	G													
			and Permit															
			Regulatory Notifications	1.5.2	G													
			Environmental Protection Plan	1.6	G													
			Storm Water Pollution Prevention	3.1.2.1	G													
			Plan															
			Storm Water Notice of Intent	3.1.2.1	G													
			Dirt and Dust Control Plan	3.13.1														
			Contractor Hazardous Material	3.7.1	G													
			Inventory Log															
			SD-06 Test Reports															
			Laboratory Analysis	3.12.2.2														
			Disposal Requirements	3.14.2														
			Erosion and Sediment Control	3.1.2														
			Inspection Reports															
			Storm Water Inspection Reports	3.1.2														
			for General Permit															
			Solid Waste Management Report	3.3.1	G													
			SD-07 Certificates															
			Contractor 40 CFR employee	1.5.5	G													
			training records															
			ECATTS certificate of completion	1.4.1														
			SD-11 Closeout Submittals															
			Storm Water Pollution Prevention	3.1.2.2	G													
			Plan compliance notebook															

SUBMITTAL REGISTER

CONTRACT NO.

TITLE AND LOCATION
P-1515 Replace and Alter Fuel Distribution Facilities

CONTRACTOR

ACTIVITY NO	TRANSMITTAL NO	SPEC SECT	DESCRIPTION ITEM SUBMITTED	PARAGRAPH #	CLASSIFICATION	GOVT OR A/E REVWR	CONTRACTOR: SCHEDULE DATES			CONTRACTOR ACTION			APPROVING AUTHORITY					MAILED TO CONTR/ DATE RCD FRM APPR AUTH	REMARKS
							SUBMIT	APPROVAL NEEDED BY	MATERIAL NEEDED BY	ACTION CODE	DATE OF ACTION	DATE FWD TO APPR AUTH/ DATE RCD FROM CONTR	DATE FWD TO OTHER REVIEWER	DATE RCD FROM OTH REVIEWER	ACTION CODE	DATE OF ACTION		
(a)	(b)	(c)	(d)	(e)	(f)		(g)	(h)	(i)	(j)	(k)	(l)	(m)	(n)	(o)	(p)	(q)	(r)
		01 57 19.00 20	Waste Determination	3.4														
			Documentation															
			Disposal Documentation for	3.3.2.1														
			Hazardous and Regulated Waste															
			Contractor 40 CFR Employee	1.5.5														
			Training Records															
			Solid Waste Management Permit	3.3														
			Solid Waste Management Report	3.3.1														
			Contractor Hazardous Material	3.7.1	G													
			Inventory Log															
			Hazardous Waste/Debris	3.12.2														
			Management															
			Regulatory Notifications	1.5.2														
		01 57 20.00 10	SD-01 Preconstruction Submittals															
			Environmental Protection Plan	1.7	G													
		01 57 23	SD-01 Preconstruction Submittals															
			Storm Water Pollution Prevention	1.3.2														
			Plan															
			Storm Water Notice of Intent	1.3.2														
			SD-06 Test Reports															
			Storm Water Inspection Reports	1.3.2														
			for General Permit															
			Erosion and Sediment Controls	1.3														
		01 58 00	SD-02 Shop Drawings															
			Preliminary one line	1.3.1.1	G													

SUBMITTAL REGISTER

CONTRACT NO.

TITLE AND LOCATION
P-1515 Replace and Alter Fuel Distribution Facilities

CONTRACTOR

ACTIVITY NO	TRANSMITTAL NO	SPEC SECT	DESCRIPTION ITEM SUBMITTED	PARAGRAPH #	CLASSIFICATION	GOVT OR A/E REVWR	CONTRACTOR: SCHEDULE DATES			CONTRACTOR ACTION			APPROVING AUTHORITY					
							SUBMIT	APPROVAL NEEDED BY	MATERIAL NEEDED BY	ACTION CODE	DATE OF ACTION	DATE FWD TO APPR AUTH/ DATE RCD FROM CONTR	DATE FWD TO OTHER REVIEWER	DATE RCD FROM OTH REVIEWER	ACTION CODE	DATE OF ACTION	MAILED TO CONTR/ DATE RCD FRM APPR AUTH	REMARKS
(a)	(b)	(c)	(d)	(e)	(f)		(g)	(h)	(i)	(j)	(k)	(l)	(m)	(n)	(o)	(p)	(q)	(r)
		01 58 00	Preliminary drawing indicating	1.4.1	G													
			layout and text content															
			SD-04 Samples															
			Final rendering	1.3.1.2	G													
			Final framed rendering	1.3.1.3	G													
		01 62 35	SD-01 Preconstruction Submittals															
			Biobased Products	1.7	G													
		01 74 19	SD-01 Preconstruction Submittals															
			Waste Management Plan	1.6	G													
			SD-11 Closeout Submittals															
			Records	1.7														
		01 78 00	SD-03 Product Data															
			As-Built Record of Equipment	1.3.2														
			and Materials															
			Warranty Management Plan	1.7.1														
			Warranty Tags	1.7.5														
			Final Cleaning	1.9														
			Spare Parts Data	1.4														
			SD-08 Manufacturer’s Instructions															
			Preventative Maintenance	1.5														
			Condition Monitoring (Predictive	1.5														
			Testing)															
			Inspection	1.5														
			Inspection	1.7.1														
			instructions	1.7.1														

SUBMITTAL REGISTER

CONTRACT NO.

TITLE AND LOCATION
P-1515 Replace and Alter Fuel Distribution Facilities

CONTRACTOR

ACTIVITY NO	TRANSMITTAL NO	SPEC SECT	DESCRIPTION ITEM SUBMITTED	PARAGRAPH #	CLASSIFICATION	GOVT OR A/E REVWR	CONTRACTOR: SCHEDULE DATES			CONTRACTOR ACTION			APPROVING AUTHORITY					
							SUBMIT	APPROVAL NEEDED BY	MATERIAL NEEDED BY	ACTION CODE	DATE OF ACTION	DATE FWD TO APPR AUTH/ DATE RCD FROM CONTR	DATE FWD TO OTHER REVIEWER	DATE RCD FROM OTH REVIEWER	ACTION CODE	DATE OF ACTION	MAILED TO CONTR/ DATE RCD FRM APPR AUTH	REMARKS
(a)	(b)	(c)	(d)	(e)	(f)		(g)	(h)	(i)	(j)	(k)	(l)	(m)	(n)	(o)	(p)	(q)	(r)
		01 78 00	SD-10 Operation and Maintenance															
			Data															
			Operation and Maintenance	1.8														
			Manuals															
			SD-11 Closeout Submittals															
			Record Drawings	1.3.1														
			Certification of EPA Designated	1.6	G													
			Items															
			Form DD1354	1.10	G													
			Checklist for Form DD1354	1.10	G													
		02 41 00	SD-01 Preconstruction Submittals															
			Existing Conditions	1.9	G													
			SD-07 Certificates															
			Demolition Plan	1.2.1	G													
			Notification	1.6	G													
			SD-11 Closeout Submittals															
			Receipts	3.3.4														
		02 61 13	SD-06 Test Reports															
			Surveys	3.1	G													
			Confirmation Sampling and	3.5	G													
			Analysis															
			Sampling of Stored Material	3.7.1	G													
			Sampling Liquid	3.7.2	G													
			Compaction	3.9.2	G													
		02 82 33.13 20	SD-03 Product Data															
			Vacuum Filters	1.6.4	G													

SUBMITTAL REGISTER

CONTRACT NO.

TITLE AND LOCATION
P-1515 Replace and Alter Fuel Distribution Facilities

CONTRACTOR

ACTIVITY NO	TRANSMITTAL NO	SPEC SECT	DESCRIPTION ITEM SUBMITTED	PARAGRAPH #	CLASSIFICATION	GOVT OR A/E REVWR	CONTRACTOR: SCHEDULE DATES			CONTRACTOR ACTION			APPROVING AUTHORITY					
							SUBMIT	APPROVAL NEEDED BY	MATERIAL NEEDED BY	ACTION CODE	DATE OF ACTION	DATE FWD TO APPR AUTH/ DATE RCD FROM CONTR	DATE FWD TO OTHER REVIEWER	DATE RCD FROM OTH REVIEWER	ACTION CODE	DATE OF ACTION	MAILED TO CONTR/ DATE RCD FRM APPR AUTH	REMARKS
(a)	(b)	(c)	(d)	(e)	(f)		(g)	(h)	(i)	(j)	(k)	(l)	(m)	(n)	(o)	(p)	(q)	(r)
		02 82 33.13 20	Respirators	1.6.1	G													
			SD-06 Test Reports															
			sampling results	1.5.2.3	G													
			Occupational and Environmental	1.5.2.3	G													
			Assessment Data Report															
			SD-07 Certificates															
			Qualifications of CP	1.5.1.1	G													
			Testing Laboratory	1.5.1.3	G													
			Occupant Notification	3.1.1.1	G													
			Training Certification	1.5.1.2	G													
			Notification of the	3.1.1.1	G													
			Commencement of LBP Hazard															
			Abatement															
			Third Party Consultant	1.5.1.4	G													
			Qualifications															
			lead-based paint/paint with lead	1.5.3	G													
			removal/control plan															
			Rental equipment notification	1.6.3	G													
			Respiratory Protection Program	1.5.2.6	G													
			Hazard Communication Program	1.5.2.7	G													
			EPA or State approved	3.5.2	G													
			hazardous waste treatment,															
			storage, or disposal facility															
			Lead Waste Management Plan	1.5.2.8	G													
			Vacuum filters	1.6.4	G													
			Clearance Certification	3.5.1.1	G													

SUBMITTAL REGISTER

CONTRACT NO.

TITLE AND LOCATION
P-1515 Replace and Alter Fuel Distribution Facilities

CONTRACTOR

ACTIVITY NO	TRANSMITTAL NO	SPEC SECT	DESCRIPTION ITEM SUBMITTED	PARAGRAPH #	CLASSIFICATION	GOVT OR A/E REVWR	CONTRACTOR: SCHEDULE DATES			CONTRACTOR ACTION			APPROVING AUTHORITY					
							SUBMIT	APPROVAL NEEDED BY	MATERIAL NEEDED BY	ACTION CODE	DATE OF ACTION	DATE FWD TO APPR AUTH/ DATE RCD FROM CONTR	DATE FWD TO OTHER REVIEWER	DATE RCD FROM OTH REVIEWER	ACTION CODE	DATE OF ACTION	MAILED TO CONTR/ DATE RCD FRM APPR AUTH	REMARKS
(a)	(b)	(c)	(d)	(e)	(f)		(g)	(h)	(i)	(j)	(k)	(l)	(m)	(n)	(o)	(p)	(q)	(r)
		02 82 33.13 20	SD-11 Closeout Submittals															
			hazardous waste manifest	3.5.2.1	G													
			Medical Examinations	1.5.2.4	G													
			Training Certification	1.5.1.2	G													
			turn-in documents or weight	3.5.2.1	G													
			tickets															
		02 84 16	SD-07 Certificates															
			Qualifications of CIH	1.8.1	G													
			Training Certification	1.8.1	G													
			PCB and Lamp Removal Work	1.8.2	G													
			Plan															
			PCB and Lamp Disposal Plan	1.8.3	G													
			SD-11 Closeout Submittals															
			Transporter certification	3.5.2	G													
			Certification of Decontamination	3.2.4														
			Certificate of Disposal and/or	3.5.2.1														
			recycling															
			DD Form 1348-1															
		03 30 00	SD-01 Preconstruction Submittals															
			Quality Control Plan	1.6.6														
			Quality Control Personnel	1.6.7														
			Certifications															
			Quality Control Organizational	1.6.7														
			Chart															
			Field Testing Technician and	1.6.7.2														
			Testing Agency															

SUBMITTAL REGISTER

CONTRACT NO.

TITLE AND LOCATION
P-1515 Replace and Alter Fuel Distribution Facilities

CONTRACTOR

ACTIVITY NO	TRANSMITTAL NO	SPEC SECT	DESCRIPTION ITEM SUBMITTED	PARAGRAPH #	CLASSIFICATION	GOVT OR A/E REVWR	CONTRACTOR: SCHEDULE DATES			CONTRACTOR ACTION			APPROVING AUTHORITY					
							SUBMIT	APPROVAL NEEDED BY	MATERIAL NEEDED BY	ACTION CODE	DATE OF ACTION	DATE FWD TO APPR AUTH/ DATE RCD FROM CONTR	DATE FWD TO OTHER REVIEWER	DATE RCD FROM OTH REVIEWER	ACTION CODE	DATE OF ACTION	MAILED TO CONTR/ DATE RCD FRM APPR AUTH	REMARKS
(a)	(b)	(c)	(d)	(e)	(f)		(g)	(h)	(i)	(j)	(k)	(l)	(m)	(n)	(o)	(p)	(q)	(r)
		03 30 00	Laboratory Accreditation	1.6.9														
			SD-02 Shop Drawings															
			Formwork	3.2.4														
			Column Forms	3.3.2														
			Wall Forms	3.3.2														
			Reinforcing steel	1.6.2	G													
			SD-03 Product Data															
			Materials for curing concrete	2.4.7	G													
			Joint sealants	2.4.10	G													
			Joint filler	2.4.9	G													
			Recycled Aggregate Materials	2.4.3.2														
			Cement	2.4.1	G													
			Portland Cement	2.4.1.3	G													
			Ready-Mix Concrete	2.3.2	G													
			Vapor barrier	2.4.6	G													
			Vapor barrier	2.4.6	G													
			Bonding Materials	2.6	G													
			Concrete Curing Materials	2.3.3	G													
			Reinforcement	2.5	G													
			Epoxy bonding compound	2.4.11	G													
			Waterstops	2.2.1	G													
			Waterstops	2.4.10.3	G													
			Waterstops	3.14.2	G													
			SD-05 Design Data															
			mix design	2.3.1	G													
			Calculations	2.3.1.1														

SUBMITTAL REGISTER

CONTRACT NO.

TITLE AND LOCATION
P-1515 Replace and Alter Fuel Distribution Facilities

CONTRACTOR

ACTIVITY NO	TRANSMITTAL NO	SPEC SECT	DESCRIPTION ITEM SUBMITTED	PARAGRAPH #	CLASSIFICATION	GOVT OR A/E REVWR	CONTRACTOR: SCHEDULE DATES			CONTRACTOR ACTION			APPROVING AUTHORITY					
							SUBMIT	APPROVAL NEEDED BY	MATERIAL NEEDED BY	ACTION CODE	DATE OF ACTION	DATE FWD TO APPR AUTH/ DATE RCD FROM CONTR	DATE FWD TO OTHER REVIEWER	DATE RCD FROM OTH REVIEWER	ACTION CODE	DATE OF ACTION	MAILED TO CONTR/ DATE RCD FRM APPR AUTH	REMARKS
(a)	(b)	(c)	(d)	(e)	(f)		(g)	(h)	(i)	(j)	(k)	(l)	(m)	(n)	(o)	(p)	(q)	(r)
		03 30 00	SD-06 Test Reports															
			Concrete mix design	1.6.4.1	G													
			Fly ash	1.6.4.2	G													
			Pozzolan	1.6.4.2	G													
			Ground granulated blast-furnace	1.6.4.3	G													
			slag															
			Aggregates	1.6.4.4	G													
			Compressive strength tests	3.12.2.3														
			Air Content	3.12.2.4	G													
			Slump	2.8.4	G													
			Air Entrainment	2.8.1														
			Ion Concentration	3.12.2.6														
			SD-07 Certificates															
			Curing concrete elements	1.6.3.1														
			Pumping concrete	1.6.3.2														
			Finishing plan	1.6.3.3														
			Form Removal Schedule	1.6.3.4														
			Biodegradable Form Release	2.4.12														
			Agent															
			VOC Content for form release	1.6.3.5														
			agents, curing compounds, and															
			concrete penetrating sealers															
			Material Safety Data Sheets	1.6.3.6														
			SD-08 Manufacturer’s Instructions															
			Fly ash	1.6.4.2														

SUBMITTAL REGISTER

CONTRACT NO.

TITLE AND LOCATION
P-1515 Replace and Alter Fuel Distribution Facilities

CONTRACTOR

ACTIVITY NO	TRANSMITTAL NO	SPEC SECT	DESCRIPTION ITEM SUBMITTED	PARAGRAPH #	CLASSIFICATION	GOVT OR A/E REVWR	CONTRACTOR: SCHEDULE DATES			CONTRACTOR ACTION			APPROVING AUTHORITY					
							SUBMIT	APPROVAL NEEDED BY	MATERIAL NEEDED BY	ACTION CODE	DATE OF ACTION	DATE FWD TO APPR AUTH/ DATE RCD FROM CONTR	DATE FWD TO OTHER REVIEWER	DATE RCD FROM OTH REVIEWER	ACTION CODE	DATE OF ACTION	MAILED TO CONTR/ DATE RCD FRM APPR AUTH	REMARKS
(a)	(b)	(c)	(d)	(e)	(f)		(g)	(h)	(i)	(j)	(k)	(l)	(m)	(n)	(o)	(p)	(q)	(r)
		03 30 00	Ground granulated blast-furnace	1.6.4.3														
			slag															
			Steel Bar	2.5.7														
		03 52 17	SD-02 Shop Drawings															
			Low Density Cellular Concrete	1.2	G													
			SD-06 Test Reports															
			Design Mix	1.2.1	G													
			SD-05 Design Data															
			Low Density Cellular Concrete	1.2	G													
		05 12 00	SD-01 Preconstruction Submittals															
			Erection Drawings	1.5.1.1	G													
			SD-02 Shop Drawings															
			Fabrication drawings	1.5.2	G													
			SD-03 Product Data															
			Shop primer	2.6.2	G													
			Welding electrodes and rods	2.4.1	G													
			Non-Shrink Grout	2.4.2	G													
			Tension control bolts	2.3.3	G													
			SD-06 Test Reports															
			Class B coating	2.6.2														
			Bolts, nuts, and washers	2.3														
			Weld Inspection Reports	3.7.1.2														
			Bolt Testing Reports	3.7.2.1														
			Embrittlement Test Reports	3.7.3														
			SD-07 Certificates															
			Steel	2.2														

SUBMITTAL REGISTER

CONTRACT NO.

TITLE AND LOCATION
P-1515 Replace and Alter Fuel Distribution Facilities

CONTRACTOR

ACTIVITY NO	TRANSMITTAL NO	SPEC SECT	DESCRIPTION ITEM SUBMITTED	PARAGRAPH #	CLASSIFICATION	GOVT OR A/E REVWR	CONTRACTOR: SCHEDULE DATES			CONTRACTOR ACTION			APPROVING AUTHORITY					
							SUBMIT	APPROVAL NEEDED BY	MATERIAL NEEDED BY	ACTION CODE	DATE OF ACTION	DATE FWD TO APPR AUTH/ DATE RCD FROM CONTR	DATE FWD TO OTHER REVIEWER	DATE RCD FROM OTH REVIEWER	ACTION CODE	DATE OF ACTION	MAILED TO CONTR/ DATE RCD FRM APPR AUTH	REMARKS
(a)	(b)	(c)	(d)	(e)	(f)		(g)	(h)	(i)	(j)	(k)	(l)	(m)	(n)	(o)	(p)	(q)	(r)
		05 12 00	Bolts, nuts, and washers	2.3														
			Galvanizing	2.5														
			AISC Fabrication Plant Quality	1.3														
			Certification															
			Welding procedures and	1.5.3.1														
			qualifications															
			Welding electrodes and rods	2.4.1														
		05 30 10	SD-02 Shop Drawings															
			Fabrication Drawings	1.3.4														
			SD-03 Product Data															
			Deck Units	1.3.1	G													
			Deck Units	2.3.1	G													
			Accessories	2.2														
			Mechanical Screw Fasteners	3.2.1.2	G													
			SD-04 Samples															
			Deck Units	1.3.1														
			Deck Units	2.3.1														
			Closure Strips	3.2.3.3														
			Accessories	2.2														
			SD-05 Design Data															
			Deck Units	1.3.1	G													
			Deck Units	2.3.1	G													
			SD-07 Certificates															
			Deck Units	1.3.1														
			Deck Units	2.3.1														
			Accessories	2.2														

SUBMITTAL REGISTER

CONTRACT NO.

TITLE AND LOCATION
P-1515 Replace and Alter Fuel Distribution Facilities

CONTRACTOR

ACTIVITY NO	TRANSMITTAL NO	SPEC SECT	DESCRIPTION ITEM SUBMITTED	PARAGRAPH #	CLASSIFICATION	GOVT OR A/E REVWR	CONTRACTOR: SCHEDULE DATES			CONTRACTOR ACTION			APPROVING AUTHORITY					
							SUBMIT	APPROVAL NEEDED BY	MATERIAL NEEDED BY	ACTION CODE	DATE OF ACTION	DATE FWD TO APPR AUTH/ DATE RCD FROM CONTR	DATE FWD TO OTHER REVIEWER	DATE RCD FROM OTH REVIEWER	ACTION CODE	DATE OF ACTION	MAILED TO CONTR/ DATE RCD FRM APPR AUTH	REMARKS
(a)	(b)	(c)	(d)	(e)	(f)		(g)	(h)	(i)	(j)	(k)	(l)	(m)	(n)	(o)	(p)	(q)	(r)
		05 30 10	Qualification of Welders	1.3.2														
			Fire Safety	1.3.3.1														
			Wind Storm Resistance	1.3.3.2														
		05 50 13	SD-02 Shop Drawings															
			steel stairs	2.9	G													
			Floor gratings and walkways	2.3	G													
			Ladders	2.7	G													
			Handrails	2.6	G													
			angles and plates	2.4	G													
			SD-03 Product Data															
			Handrails	2.6														
			Ladders	2.7														
			Floor gratings and walkways	2.3														
		05 56 00	SD-02 Shop Drawings															
			Approved Detail Drawings	3.3	G													
			SD-03 Product Data															
			Fall Arrestor System	2.2	G													
			SD-07 Certificates															
			Fall Arrestor System	2.2	G													
			SD-10 Operation and Maintenance															
			Data															
			Operation and Maintenance	3.4														
			Manuals															
		07 11 13	SD-03 Product Data															
			Asphalt	2.1	G													
			Asphalt Primer	2.2	G													

SUBMITTAL REGISTER

CONTRACT NO.

TITLE AND LOCATION
P-1515 Replace and Alter Fuel Distribution Facilities

CONTRACTOR

ACTIVITY NO	TRANSMITTAL NO	SPEC SECT	DESCRIPTION ITEM SUBMITTED	PARAGRAPH #	CLASSIFICATION	GOVT OR A/E REVWR	CONTRACTOR: SCHEDULE DATES			CONTRACTOR ACTION			APPROVING AUTHORITY					
							SUBMIT	APPROVAL NEEDED BY	MATERIAL NEEDED BY	ACTION CODE	DATE OF ACTION	DATE FWD TO APPR AUTH/ DATE RCD FROM CONTR	DATE FWD TO OTHER REVIEWER	DATE RCD FROM OTH REVIEWER	ACTION CODE	DATE OF ACTION	MAILED TO CONTR/ DATE RCD FRM APPR AUTH	REMARKS
(a)	(b)	(c)	(d)	(e)	(f)		(g)	(h)	(i)	(j)	(k)	(l)	(m)	(n)	(o)	(p)	(q)	(r)
		07 11 13	Emulsion-based asphalt	2.3.1	G													
			Protection board	2.4.1	G													
			Glass fabric	2.5	G													
			SD-07 Certificates															
			Materials	1.3														
		07 14 00	SD-03 Product Data															
			Fluid-applied membrane	2.1	G													
			Membrane primer	2.2	G													
			Elastomeric sheet	2.7	G													
			Flexible foam-backed elastomeric	2.9	G													
			sheet															
			Solvent	3.3														
			Moisture meter	3.4.1														
			Protection board	2.10	G													
			Bond breaker	2.6														
			SD-11 Closeout Submittals															
			Warranty	1.6														
			Information Card	3.6														
			Instructions To Government	3.5														
			Personnel															
		07 60 00	SD-02 Shop Drawings															
			Covering on flat, sloped, or	3.1.15	G													
			curved surfaces															
			Gutters	3.1.12	G													
			Downspouts	3.1.13	G													
			Fascias	3.1.10	G													

SUBMITTAL REGISTER

CONTRACT NO.

TITLE AND LOCATION
P-1515 Replace and Alter Fuel Distribution Facilities

CONTRACTOR

ACTIVITY NO	TRANSMITTAL NO	SPEC SECT	DESCRIPTION ITEM SUBMITTED	PARAGRAPH #	CLASSIFICATION	GOVT OR A/E REVWR	CONTRACTOR: SCHEDULE DATES			CONTRACTOR ACTION			APPROVING AUTHORITY					
							SUBMIT	APPROVAL NEEDED BY	MATERIAL NEEDED BY	ACTION CODE	DATE OF ACTION	DATE FWD TO APPR AUTH/ DATE RCD FROM CONTR	DATE FWD TO OTHER REVIEWER	DATE RCD FROM OTH REVIEWER	ACTION CODE	DATE OF ACTION	MAILED TO CONTR/ DATE RCD FRM APPR AUTH	REMARKS
(a)	(b)	(c)	(d)	(e)	(f)		(g)	(h)	(i)	(j)	(k)	(l)	(m)	(n)	(o)	(p)	(q)	(r)
		07 60 00	Flashing at roof penetrations	3.1.16	G													
			Drip edge	3.1.11	G													
			Eave flashing	3.1.14	G													
			SD-11 Closeout Submittals															
			Quality Control Plan	3.5														
		07 61 14.00 20	SD-02 Shop Drawings															
			Roofing	1.2.4	G													
			SD-03 Product Data															
			Roofing panels	2.1	G													
			Attachment clips	2.3														
			Closures	2.4.1														
			Accessories	2.4														
			Fasteners	2.4.2														
			Sealants	2.4.3														
			warranty	1.7	G													
			SD-04 Samples															
			panel	2.1														
			Intermediate Support	2.2														
			SD-05 Design Data															
			Design calculations	1.5														
			SD-06 Test Reports															
			Field Inspection	3.5														
			Structural performance	1.3.3														
			Finish	1.6.6														
			SD-07 Certificates															

SUBMITTAL REGISTER

CONTRACT NO.

TITLE AND LOCATION
P-1515 Replace and Alter Fuel Distribution Facilities

CONTRACTOR

ACTIVITY NO	TRANSMITTAL NO	SPEC SECT	DESCRIPTION ITEM SUBMITTED	PARAGRAPH #	CLASSIFICATION	GOVT OR A/E REVWR	CONTRACTOR: SCHEDULE DATES			CONTRACTOR ACTION			APPROVING AUTHORITY					
							SUBMIT	APPROVAL NEEDED BY	MATERIAL NEEDED BY	ACTION CODE	DATE OF ACTION	DATE FWD TO APPR AUTH/ DATE RCD FROM CONTR	DATE FWD TO OTHER REVIEWER	DATE RCD FROM OTH REVIEWER	ACTION CODE	DATE OF ACTION	MAILED TO CONTR/ DATE RCD FRM APPR AUTH	REMARKS
(a)	(b)	(c)	(d)	(e)	(f)		(g)	(h)	(i)	(j)	(k)	(l)	(m)	(n)	(o)	(p)	(q)	(r)
		07 61 14.00 20	Manufacturer's Technical	1.6.3														
			Representative															
			Installer's Qualifications	1.6.4														
			Coil stock	2.1	G													
			SD-08 Manufacturer’s Instructions															
			Installation	3.2	G													
			SD-11 Closeout Submittals															
			Information card	3.7														
		07 92 00	SD-03 Product Data															
			Sealants	2.1														
			Primers	2.2														
			Bond breakers	2.3														
			Backstops	2.4														
			SD-07 Certificates															
			Sealant	3.3.6														
		09 90 00	SD-03 Product Data															
			Environmental Data															
			Materials	2.1														
			Coating	2.1	G													
			Manufacturer's Technical Data	2.1														
			Sheets															
			SD-04 Samples															
			Color	1.9	G													
			SD-07 Certificates															
			Applicator's qualifications	1.3														
			Qualification Testing	1.4.1.2	G													

SUBMITTAL REGISTER

CONTRACT NO.

TITLE AND LOCATION
P-1515 Replace and Alter Fuel Distribution Facilities

CONTRACTOR

ACTIVITY NO	TRANSMITTAL NO	SPEC SECT	DESCRIPTION ITEM SUBMITTED	PARAGRAPH #	CLASSIFICATION	GOVT OR A/E REVWR	CONTRACTOR: SCHEDULE DATES			CONTRACTOR ACTION			APPROVING AUTHORITY					
							SUBMIT	APPROVAL NEEDED BY	MATERIAL NEEDED BY	ACTION CODE	DATE OF ACTION	DATE FWD TO APPR AUTH/ DATE RCD FROM CONTR	DATE FWD TO OTHER REVIEWER	DATE RCD FROM OTH REVIEWER	ACTION CODE	DATE OF ACTION	MAILED TO CONTR/ DATE RCD FRM APPR AUTH	REMARKS
(a)	(b)	(c)	(d)	(e)	(f)		(g)	(h)	(i)	(j)	(k)	(l)	(m)	(n)	(o)	(p)	(q)	(r)
		09 90 00	SD-08 Manufacturer's Instructions															
			Mixing	3.5.2														
			Manufacturer's Material Safety	1.7.2														
			Data Sheets															
			SD-10 Operation and Maintenance															
			Data															
			Coatings	2.1	G													
		09 97 13.15	SD-05 Design Data															
			Environmental Control System	1.4.4.1														
			Use of Door Sheet Access Way	1.4.4.2	G													
			SD-06 Test Reports															
			Coating Sample Test Reports	3.2.2														
			Inspection Report Forms	3.12.2.2														
			Daily Inspection Reports	3.12.2.3														
			SD-07 Certificates															
			Contract Errors, Omissions, and	1.4.1														
			Other Discrepancies															
			Corrective Action Procedures	1.4.2.1														
			Coating Work Plan	1.4.3														
			Qualifications of Certified	1.4.6.1														
			Industrial Hygienist (CIH)															
			Qualifications of Certified	1.4.6.2														
			Protective Coatings Specialist															
			(PCS)															
			Qualifications of Coating	1.4.6.3														
			Inspection Company															

SUBMITTAL REGISTER

CONTRACT NO.

TITLE AND LOCATION
P-1515 Replace and Alter Fuel Distribution Facilities

CONTRACTOR

ACTIVITY NO	TRANSMITTAL NO	SPEC SECT	DESCRIPTION ITEM SUBMITTED	PARAGRAPH #	CLASSIFICATION	GOVT OR A/E REVWR	CONTRACTOR: SCHEDULE DATES			CONTRACTOR ACTION			APPROVING AUTHORITY					MAILED TO CONTR/ DATE RCD FRM APPR AUTH	REMARKS
							SUBMIT	APPROVAL NEEDED BY	MATERIAL NEEDED BY	ACTION CODE	DATE OF ACTION	DATE FWD TO APPR AUTH/ DATE RCD FROM CONTR	DATE FWD TO OTHER REVIEWER	DATE RCD FROM OTH REVIEWER	ACTION CODE	DATE OF ACTION		
(a)	(b)	(c)	(d)	(e)	(f)		(g)	(h)	(i)	(j)	(k)	(l)	(m)	(n)	(o)	(p)	(q)	(r)
		09 97 13.15	Qualifications of QC Specialist	1.4.6.4														
			Coating Inspector															
			Qualifications of Testing	1.4.6.5														
			Laboratory for Coatings															
			Qualifications of Coating	1.4.6.6														
			Contractors															
			Roof Joint Sealant Materials	1.4.6.7														
			Roof Joint Sealant Compatibility	1.4.6.8														
			Epoxy Coating Materials	1.4.6.9														
			Coating System Component	1.4.6.10														
			Compatibility															
			SD-08 Manufacturer's Instructions															
			Roof Joint Sealant Instructions	1.5.1														
			Coating System Instructions	1.5.2														
			SD-11 Closeout Submittals															
			Inspection Logbook	3.12.2.4	G													
		09 97 13.17	SD-05 Design Data															
			Environmental Control System	1.3.4.1														
			SD-06 Test Reports															
			Metallic Abrasive Qualification	1.3.5.1														
			Test Reports															
			Coating Sample Test Reports	3.1.3														
			Abrasive Sample Test Reports	3.1.4														
			Inspection Report Forms	3.8.2.2														
			Daily Inspection Reports	3.8.2.3														

SUBMITTAL REGISTER

CONTRACT NO.

TITLE AND LOCATION
P-1515 Replace and Alter Fuel Distribution Facilities

CONTRACTOR

ACTIVITY NO	TRANSMITTAL NO	SPEC SECT	DESCRIPTION ITEM SUBMITTED	PARAGRAPH #	CLASSIFICATION	GOVT OR A/E REVWR	CONTRACTOR: SCHEDULE DATES			CONTRACTOR ACTION			APPROVING AUTHORITY					
							SUBMIT	APPROVAL NEEDED BY	MATERIAL NEEDED BY	ACTION CODE	DATE OF ACTION	DATE FWD TO APPR AUTH/ DATE RCD FROM CONTR	DATE FWD TO OTHER REVIEWER	DATE RCD FROM OTH REVIEWER	ACTION CODE	DATE OF ACTION	MAILED TO CONTR/ DATE RCD FRM APPR AUTH	REMARKS
(a)	(b)	(c)	(d)	(e)	(f)		(g)	(h)	(i)	(j)	(k)	(l)	(m)	(n)	(o)	(p)	(q)	(r)
		09 97 13.17	Recycled Metallic Abrasive Field	1.3.5.2														
			Test Reports (Daily and Weekly)															
			SD-07 Certificates															
			Contract Errors, Omissions, and	1.3.1														
			Other Discrepancies															
			Corrective Action Procedures	1.3.2.1														
			Coating Work Plan	1.3.3														
			Qualifications of Certified	1.3.6.1														
			Industrial Hygienist (CIH)															
			Qualifications Of Individuals	1.3.6.5														
			Performing Abrasive Blasting															
			Qualifications of Certified	1.3.6.2														
			Protective Coatings Specialist															
			(PCS)															
			Qualifications of Coating	1.3.6.3														
			Inspection Company															
			Qualifications of QC Specialist	1.3.6.4														
			Coating Inspector															
			Qualifications of Testing	1.3.6.6														
			Laboratory for Coatings															
			Qualifications of Testing	1.3.6.7														
			Laboratory for Abrasive															
			Qualifications of Coating	1.3.6.8														
			Contractors															
			Epoxy Coating Materials	1.3.6.9	G													
			Non-metallic Abrasive	1.3.6.10														

SUBMITTAL REGISTER

CONTRACT NO.

TITLE AND LOCATION
P-1515 Replace and Alter Fuel Distribution Facilities

CONTRACTOR

ACTIVITY NO	TRANSMITTAL NO	SPEC SECT	DESCRIPTION ITEM SUBMITTED	PARAGRAPH #	CLASSIFICATION	GOVT OR A/E REVWR	CONTRACTOR: SCHEDULE DATES			CONTRACTOR ACTION			APPROVING AUTHORITY					
							SUBMIT	APPROVAL NEEDED BY	MATERIAL NEEDED BY	ACTION CODE	DATE OF ACTION	DATE FWD TO APPR AUTH/ DATE RCD FROM CONTR	DATE FWD TO OTHER REVIEWER	DATE RCD FROM OTH REVIEWER	ACTION CODE	DATE OF ACTION	MAILED TO CONTR/ DATE RCD FRM APPR AUTH	REMARKS
(a)	(b)	(c)	(d)	(e)	(f)		(g)	(h)	(i)	(j)	(k)	(l)	(m)	(n)	(o)	(p)	(q)	(r)
		09 97 13.17	Metallic Abrasive	1.3.6.11														
			SD-08 Manufacturer's Instructions															
			Coating System Instructions	1.4.1														
			SD-11 Closeout Submittals															
			Disposal of Used Abrasive	3.5.6														
			Inspection Logbook	3.8.2.4	G													
		09 97 13.27	SD-05 Design Data															
			Containment System	1.4.4.1														
			SD-06 Test Reports															
			Joint Sealant Qualification Test	1.4.5.1														
			Reports															
			Coatings Qualification Test	1.4.5.2														
			Reports															
			Metallic Abrasive Qualification	1.4.5.3														
			Test Reports															
			Coating Sample Test Reports	3.1.3														
			Abrasive Sample Test Reports	3.1.4														
			Inspection Report Forms	3.8.2.2														
			Daily Inspection Reports	3.8.2.3														
			Recycled Metallic Abrasive Field	1.4.5.4														
			Test Reports (Daily and Weekly)															
			SD-07 Certificates															
			Contract Errors, Omissions, and	1.4.1														
			Other Discrepancies															
			Corrective Action Procedures	1.4.2.1														
			Coating Work Plan	1.4.3														

SUBMITTAL REGISTER

CONTRACT NO.

TITLE AND LOCATION
P-1515 Replace and Alter Fuel Distribution Facilities

CONTRACTOR

ACTIVITY NO	TRANSMITTAL NO	SPEC SECT	DESCRIPTION ITEM SUBMITTED	PARAGRAPH #	CLASSIFICATION	GOVT OR A/E REVWR	CONTRACTOR: SCHEDULE DATES			CONTRACTOR ACTION			APPROVING AUTHORITY					
							SUBMIT	APPROVAL NEEDED BY	MATERIAL NEEDED BY	ACTION CODE	DATE OF ACTION	DATE FWD TO APPR AUTH/ DATE RCD FROM CONTR	DATE FWD TO OTHER REVIEWER	DATE RCD FROM OTH REVIEWER	ACTION CODE	DATE OF ACTION	MAILED TO CONTR/ DATE RCD FRM APPR AUTH	REMARKS
(a)	(b)	(c)	(d)	(e)	(f)		(g)	(h)	(i)	(j)	(k)	(l)	(m)	(n)	(o)	(p)	(q)	(r)
		09 97 13.27	Qualifications of Certified	1.4.6.1														
			Industrial Hygienist (CIH)															
			Qualifications Of Individuals	1.4.6.5														
			Performing Abrasive Blasting															
			Qualifications of Certified	1.4.6.2														
			Protective Coatings Specialist															
			(PCS)															
			Qualifications of Coating	1.4.6.3														
			Inspection Company															
			Qualifications of QC Specialist	1.4.6.4														
			Coating Inspector															
			Qualifications of Testing	1.4.6.6														
			Laboratory for Coatings															
			Qualifications of Testing	1.4.6.7														
			Laboratory for Abrasive															
			Qualifications of Coating	1.4.6.8														
			Contractors															
			Joint Sealant Materials	1.4.6.9	G													
			Coating Materials	1.4.6.10	G													
			Coating System Component	1.4.6.11	G													
			Compatibility															
			Non-metallic Abrasive	1.4.6.12														
			Metallic Abrasive	1.4.6.13														
			SD-08 Manufacturer's Instructions															
			Joint Sealant Instructions	1.5.1														
			Coating System Instructions	1.5.2														

SUBMITTAL REGISTER

CONTRACT NO.

TITLE AND LOCATION
P-1515 Replace and Alter Fuel Distribution Facilities

CONTRACTOR

ACTIVITY NO	TRANSMITTAL NO	SPEC SECT	DESCRIPTION ITEM SUBMITTED	PARAGRAPH #	CLASSIFICATION	GOVT OR A/E REVWR	CONTRACTOR: SCHEDULE DATES			CONTRACTOR ACTION			APPROVING AUTHORITY					
							SUBMIT	APPROVAL NEEDED BY	MATERIAL NEEDED BY	ACTION CODE	DATE OF ACTION	DATE FWD TO APPR AUTH/ DATE RCD FROM CONTR	DATE FWD TO OTHER REVIEWER	DATE RCD FROM OTH REVIEWER	ACTION CODE	DATE OF ACTION	MAILED TO CONTR/ DATE RCD FRM APPR AUTH	REMARKS
(a)	(b)	(c)	(d)	(e)	(f)		(g)	(h)	(i)	(j)	(k)	(l)	(m)	(n)	(o)	(p)	(q)	(r)
		09 97 13.27	SD-11 Closeout Submittals															
			Disposal of Used Abrasive	3.5.6														
			Inspection Logbook	3.8.2.4	G													
		10 44 16	SD-01 Preconstruction Submittals															
			Manufacturer's Data	2.1														
			SD-02 Shop Drawings															
			Cart Mounted Fire Extinguishers	1.4														
			SD-03 Product Data															
			Cart Mounted Fire Extinguishers	1.4														
			SD-07 Certificates															
			Cart Mounted Fire Extinguishers	1.4														
			Manufacturer's Warranty with	2.1														
			Inspection Tag															
		13 34 23	SD-01 Preconstruction Submittals															
			Manufacturer's Qualifications	1.5.1	G													
			SD-02 Shop Drawings															
			Detail Drawings		G													
			SD-04 Samples															
			Manufacturer's color charts and	2.8.1	G													
			chips															
			SD-05 Design Data															
			descriptive and technical		G													
			literature															
			building design analysis		G													
			SD-08 Manufacturer’s Instructions															
			Shipping, handling, and storage	1.6	G													

SUBMITTAL REGISTER

CONTRACT NO.

TITLE AND LOCATION
P-1515 Replace and Alter Fuel Distribution Facilities

CONTRACTOR

ACTIVITY NO	TRANSMITTAL NO	SPEC SECT	DESCRIPTION ITEM SUBMITTED	PARAGRAPH #	CLASSIFICATION	GOVT OR A/E REVWR	CONTRACTOR: SCHEDULE DATES			CONTRACTOR ACTION			APPROVING AUTHORITY					
							SUBMIT	APPROVAL NEEDED BY	MATERIAL NEEDED BY	ACTION CODE	DATE OF ACTION	DATE FWD TO APPR AUTH/ DATE RCD FROM CONTR	DATE FWD TO OTHER REVIEWER	DATE RCD FROM OTH REVIEWER	ACTION CODE	DATE OF ACTION	MAILED TO CONTR/ DATE RCD FRM APPR AUTH	REMARKS
(a)	(b)	(c)	(d)	(e)	(f)		(g)	(h)	(i)	(j)	(k)	(l)	(m)	(n)	(o)	(p)	(q)	(r)
		13 34 23	SD-11 Closeout Submittals															
			Manufacturer's Warranty	3.6.1	G													
			Contractor's Warranty for	3.6.2	G													
			Installation															
		13 48 00.00 10	SD-02 Shop Drawings															
			Coupling and Bracing	3.1														
			Equipment Requirements	1.3														
			SD-03 Product Data															
			Coupling and Bracing	3.1	G													
			Equipment Requirements	1.3	G													
		13 48 00	SD-02 Shop Drawings															
			Bracing	3.1	G													
			Resilient Vibration Isolation	3.4	G													
			Devices															
			Equipment Requirements	2.1	G													
			SD-03 Product Data															
			Bracing	3.1	G													
			Equipment Requirements	2.1	G													
			SD-06 Test Reports															
			Anchor Bolts	3.3														
		26 05 48.00 10	SD-02 Shop Drawings															
			Lighting Fixtures in Buildings	3.2														
			Equipment Requirements	1.3														
			SD-03 Product Data															
			Lighting Fixtures in Buildings	3.2	G													
			Equipment Requirements	1.3	G													

SUBMITTAL REGISTER

CONTRACT NO.

TITLE AND LOCATION
P-1515 Replace and Alter Fuel Distribution Facilities

CONTRACTOR

ACTIVITY NO	TRANSMITTAL NO	SPEC SECT	DESCRIPTION ITEM SUBMITTED	PARAGRAPH #	CLASSIFICATION	GOVT OR A/E REVWR	CONTRACTOR: SCHEDULE DATES			CONTRACTOR ACTION			APPROVING AUTHORITY					
							SUBMIT	APPROVAL NEEDED BY	MATERIAL NEEDED BY	ACTION CODE	DATE OF ACTION	DATE FWD TO APPR AUTH/ DATE RCD FROM CONTR	DATE FWD TO OTHER REVIEWER	DATE RCD FROM OTH REVIEWER	ACTION CODE	DATE OF ACTION	MAILED TO CONTR/ DATE RCD FRM APPR AUTH	REMARKS
(a)	(b)	(c)	(d)	(e)	(f)		(g)	(h)	(i)	(j)	(k)	(l)	(m)	(n)	(o)	(p)	(q)	(r)
		26 05 48.00 10	Contractor Designed Bracing	1.2.3	G													
		26 08 00	SD-06 Test Reports															
			Acceptance tests and inspections	3.1	G													
			SD-07 Certificates															
			Qualifications	1.4.1	G													
			Acceptance test and inspections	1.4.3	G													
			procedure															
		26 12 19.10	SD-02 Shop Drawings															
			Pad-mounted transformer	1.5.1	G													
			drawings															
			SD-03 Product Data															
			Pad-mounted transformers	2.2	G													
			SD-06 Test Reports															
			Acceptance checks and tests	3.6.1	G													
			SD-07 Certificates															
			Transformer Efficiencies	2.2.2.1	G													
			SD-09 Manufacturer's Field															
			Reports															
			design tests	2.7.2	G													
			routine and other tests	2.7.3	G													
			SD-10 Operation and Maintenance															
			Data															
			Transformer(s)	1.6.1	G													
			SD-11 Closeout Submittals															
			Transformer test schedule	2.7.1	G													
		26 20 00	SD-02 Shop Drawings															

SUBMITTAL REGISTER

CONTRACT NO.

TITLE AND LOCATION
P-1515 Replace and Alter Fuel Distribution Facilities

CONTRACTOR

ACTIVITY NO	TRANSMITTAL NO	SPEC SECT	DESCRIPTION ITEM SUBMITTED	PARAGRAPH #	CLASSIFICATION	GOVT OR A/E REVWR	CONTRACTOR: SCHEDULE DATES			CONTRACTOR ACTION			APPROVING AUTHORITY					
							SUBMIT	APPROVAL NEEDED BY	MATERIAL NEEDED BY	ACTION CODE	DATE OF ACTION	DATE FWD TO APPR AUTH/ DATE RCD FROM CONTR	DATE FWD TO OTHER REVIEWER	DATE RCD FROM OTH REVIEWER	ACTION CODE	DATE OF ACTION	MAILED TO CONTR/ DATE RCD FRM APPR AUTH	REMARKS
(a)	(b)	(c)	(d)	(e)	(f)		(g)	(h)	(i)	(j)	(k)	(l)	(m)	(n)	(o)	(p)	(q)	(r)
		26 20 00	Panelboards	2.11	G													
			Transformers	2.13	G													
			Motor control centers	2.17	G													
			Wireways	2.24	G													
			Marking strips	3.1.9.1														
			SD-03 Product Data															
			Receptacles	2.10														
			Circuit breakers	2.11.3	G													
			Switches	2.8	G													
			Transformers	2.13	G													
			Motor controllers	2.15	G													
			Manual motor starters	2.16	G													
			Motor Control Centers	2.17	G													
			Surge protective devices	2.25	G													
			SD-06 Test Reports															
			600-volt wiring test	3.5.2	G													
			Grounding system test	3.5.4	G													
			Transformer tests	3.5.3	G													
			SD-07 Certificates															
			Fuses	2.9	G													
			SD-09 Manufacturer's Field															
			Reports															
			Transformer factory tests	2.27.1														
			SD-10 Operation and Maintenance															
			Data															
			Electrical Systems	1.5.1	G													

SUBMITTAL REGISTER

CONTRACT NO.

TITLE AND LOCATION
P-1515 Replace and Alter Fuel Distribution Facilities

CONTRACTOR

ACTIVITY NO	TRANSMITTAL NO	SPEC SECT	DESCRIPTION ITEM SUBMITTED	PARAGRAPH #	CLASSIFICATION	GOVT OR A/E REVWR	CONTRACTOR: SCHEDULE DATES			CONTRACTOR ACTION			APPROVING AUTHORITY					
							SUBMIT	APPROVAL NEEDED BY	MATERIAL NEEDED BY	ACTION CODE	DATE OF ACTION	DATE FWD TO APPR AUTH/ DATE RCD FROM CONTR	DATE FWD TO OTHER REVIEWER	DATE RCD FROM OTH REVIEWER	ACTION CODE	DATE OF ACTION	MAILED TO CONTR/ DATE RCD FRM APPR AUTH	REMARKS
(a)	(b)	(c)	(d)	(e)	(f)		(g)	(h)	(i)	(j)	(k)	(l)	(m)	(n)	(o)	(p)	(q)	(r)
		26 27 14.00 20	SD-02 Shop Drawings															
			Installation Drawings	1.4.1	G													
			SD-03 Product Data															
			Electricity meters	2.1.3	G													
			Current transformer	2.1.2	G													
			Potential transformer		G													
			communications	2.2	G													
			Configuration Software	3.1.1	G													
			SD-06 Test Reports															
			Acceptance checks and tests	3.2.1	G													
			System functional verification	3.2.2	G													
			Meter configuration report	3.2.1	G													
			SD-11 Closeout Submittals															
			System functional verification	3.2.2	G													
		26 41 00.00 40	SD-02 Shop Drawings															
			Overall lightning protection	1.4.1	G													
			system															
			Each major component	1.4.1	G													
			SD-03 Product Data															
			Air Terminals	2.2.1														
			Main and Secondary Conductors															
			Ground Rods	2.2.2														
			Clamp-Type Connectors															
			Lightning Protection Components															
			Hardware	2.1														
			Accessories	2.1														

SUBMITTAL REGISTER

CONTRACT NO.

TITLE AND LOCATION
P-1515 Replace and Alter Fuel Distribution Facilities

CONTRACTOR

ACTIVITY NO	TRANSMITTAL NO	SPEC SECT	DESCRIPTION ITEM SUBMITTED	PARAGRAPH #	CLASSIFICATION	GOVT OR A/E REVWR	CONTRACTOR: SCHEDULE DATES			CONTRACTOR ACTION			APPROVING AUTHORITY					
							SUBMIT	APPROVAL NEEDED BY	MATERIAL NEEDED BY	ACTION CODE	DATE OF ACTION	DATE FWD TO APPR AUTH/ DATE RCD FROM CONTR	DATE FWD TO OTHER REVIEWER	DATE RCD FROM OTH REVIEWER	ACTION CODE	DATE OF ACTION	MAILED TO CONTR/ DATE RCD FRM APPR AUTH	REMARKS
(a)	(b)	(c)	(d)	(e)	(f)		(g)	(h)	(i)	(j)	(k)	(l)	(m)	(n)	(o)	(p)	(q)	(r)
		26 41 00.00 40	SD-06 Test Reports															
			Grounding system test	3.5.1	G													
			Lightning protection system	3.5.2	G													
			inspection															
			SD-07 Certificates															
			UL listing or label	1.4.2	G													
			Certificates	3.5.3														
		26 42 13.00 20	SD-02 Shop Drawings															
			Test Stations	2.2														
			SD-03 Product Data															
			Anodes	2.1	G													
			Wires	2.1.2.1														
			Cable and wire	2.5														
			Shunt resistors	2.3														
			Permanent reference electrodes	2.4	G													
			SD-07 Certificates															
			Qualifications of Corrosion	1.3	G													
			Engineer															
			SD-10 Operation and Maintenance															
			Data															
			Cathodic Protection System	3.2	G													
			SD-11 Closeout Submittals															
			Initial Cathodic Protection System	3.2.1.2	G													
			Field Test Report															

SUBMITTAL REGISTER

CONTRACT NO.

TITLE AND LOCATION
P-1515 Replace and Alter Fuel Distribution Facilities

CONTRACTOR

ACTIVITY NO	TRANSMITTAL NO	SPEC SECT	DESCRIPTION ITEM SUBMITTED	PARAGRAPH #	CLASSIFICATION	GOVT OR A/E REVWR	CONTRACTOR: SCHEDULE DATES			CONTRACTOR ACTION			APPROVING AUTHORITY					
							SUBMIT	APPROVAL NEEDED BY	MATERIAL NEEDED BY	ACTION CODE	DATE OF ACTION	DATE FWD TO APPR AUTH/ DATE RCD FROM CONTR	DATE FWD TO OTHER REVIEWER	DATE RCD FROM OTH REVIEWER	ACTION CODE	DATE OF ACTION	MAILED TO CONTR/ DATE RCD FRM APPR AUTH	REMARKS
(a)	(b)	(c)	(d)	(e)	(f)		(g)	(h)	(i)	(j)	(k)	(l)	(m)	(n)	(o)	(p)	(q)	(r)
		26 42 13.00 20	One Year Warranty Period	3.2.1.4	G													
			Cathodic Protection System Field															
			Test Report															
			Final Cathodic Protection System	3.2.1.5	G													
			Field Test Report															
		26 51 00.00 40	SD-02 Shop Drawings															
			Luminaire Drawings	1.4.1	G													
			SD-03 Product Data															
			Local/Regional Materials	1.7.1														
			LED (Light Emitting Diode) Light	2.2	G													
			Fixtures															
			Driver	2.2.3	G													
			Energy Efficiency	1.7.2														
			SD-06 Test Reports															
			IES LM-79	3.1.1	G													
			SD-07 Certificates															
			Fixture Useful Life Certificate	3.1.4	G													
			SD-10 Operation and Maintenance															
			Data															
			Operational Service	1.6														
		26 52 00.00 40	SD-03 Product Data															
			Emergency Lighting Egress Units	2.2.1	G													
			System Operational Tests	3.2														
			SD-07 Certificates															
			Certificates of Conformance															
			Warranty	3.3	G													

SUBMITTAL REGISTER

CONTRACT NO.

TITLE AND LOCATION
P-1515 Replace and Alter Fuel Distribution Facilities

CONTRACTOR

ACTIVITY NO	TRANSMITTAL NO	SPEC SECT	DESCRIPTION ITEM SUBMITTED	PARAGRAPH #	CLASSIFICATION	GOVT OR A/E REVWR	CONTRACTOR: SCHEDULE DATES			CONTRACTOR ACTION			APPROVING AUTHORITY					
							SUBMIT	APPROVAL NEEDED BY	MATERIAL NEEDED BY	ACTION CODE	DATE OF ACTION	DATE FWD TO APPR AUTH/ DATE RCD FROM CONTR	DATE FWD TO OTHER REVIEWER	DATE RCD FROM OTH REVIEWER	ACTION CODE	DATE OF ACTION	MAILED TO CONTR/ DATE RCD FRM APPR AUTH	REMARKS
(a)	(b)	(c)	(d)	(e)	(f)		(g)	(h)	(i)	(j)	(k)	(l)	(m)	(n)	(o)	(p)	(q)	(r)
		26 53 00.00 40	SD-02 Shop Drawings															
			Exit Lighting Units	2.2														
			Exit Lighting Units Outline															
			Drawings															
			SD-03 Product Data															
			Exit Lighting Units	2.2	G													
			SD-07 Certificates															
			Energy Efficiencies	2.1.1														
		26 56 00	SD-01 Preconstruction Submittals															
			Photometric Plan	1.5.2	G													
			LED Luminaire Warranty	1.7.1	G													
			SD-02 Shop Drawings															
			Luminaire drawings	1.5.1.1	G													
			Poles	1.5.1.2	G													
			SD-03 Product Data															
			Enclosed, Gasketed, and	2.2.2														
			Explosionproof Vapor-Tight															
			Fixtures															
			Luminaire Light Sources	2.2.3	G													
			Luminaire Power Supply Units	2.2.4	G													
			(Drivers)															
			Lighting contactor	2.3.2	G													
			Photocell	2.3.1	G													
			Aluminum poles	2.4.3	G													
			Brackets	2.5														
			SD-05 Design Data															

SUBMITTAL REGISTER

CONTRACT NO.

TITLE AND LOCATION
P-1515 Replace and Alter Fuel Distribution Facilities

CONTRACTOR

ACTIVITY NO	TRANSMITTAL NO	SPEC SECT	DESCRIPTION ITEM SUBMITTED	PARAGRAPH #	CLASSIFICATION	GOVT OR A/E REVWR	CONTRACTOR: SCHEDULE DATES			CONTRACTOR ACTION			APPROVING AUTHORITY					
							SUBMIT	APPROVAL NEEDED BY	MATERIAL NEEDED BY	ACTION CODE	DATE OF ACTION	DATE FWD TO APPR AUTH/ DATE RCD FROM CONTR	DATE FWD TO OTHER REVIEWER	DATE RCD FROM OTH REVIEWER	ACTION CODE	DATE OF ACTION	MAILED TO CONTR/ DATE RCD FRM APPR AUTH	REMARKS
(a)	(b)	(c)	(d)	(e)	(f)		(g)	(h)	(i)	(j)	(k)	(l)	(m)	(n)	(o)	(p)	(q)	(r)
		26 56 00	Design Data for luminaires	1.5.3	G													
			SD-06 Test Reports															
			LED Luminaire - IES LM-79 Test	1.5.4	G													
			Report															
			LED Light Source - IES LM-80	1.5.5	G													
			Test Report															
			Operating test	3.2														
			SD-07 Certificates															
			Luminaire Useful Life Certificate	1.7.1	G													
			SD-10 Operation and Maintenance															
			Data															
			Operational Service	1.8														
		31 23 00.00 20	SD-01 Preconstruction Submittals															
			Shoring and Sheeting Plan	1.7.2	G													
			Dewatering work plan	1.7.3	G													
			SD-06 Test Reports															
			Borrow Site Testing	1.6	G													
			Fill and backfill	3.13.2.1														
			Select material	3.13.2.2														
			Porous fill	3.13.2.3														
			Density tests	3.13.2.4														
			Moisture Content Tests	3.13.2.5														
		31 33 34	SD-02 Shop Drawings															
			Detailed Drawings	1.9.1	G													
			SD-03 Product Data															
			Calculations	2.3	G													

SUBMITTAL REGISTER

CONTRACT NO.

TITLE AND LOCATION
P-1515 Replace and Alter Fuel Distribution Facilities

CONTRACTOR

ACTIVITY NO	TRANSMITTAL NO	SPEC SECT	DESCRIPTION ITEM SUBMITTED	PARAGRAPH #	CLASSIFICATION	GOVT OR A/E REVWR	CONTRACTOR: SCHEDULE DATES			CONTRACTOR ACTION			APPROVING AUTHORITY					
							SUBMIT	APPROVAL NEEDED BY	MATERIAL NEEDED BY	ACTION CODE	DATE OF ACTION	DATE FWD TO APPR AUTH/ DATE RCD FROM CONTR	DATE FWD TO OTHER REVIEWER	DATE RCD FROM OTH REVIEWER	ACTION CODE	DATE OF ACTION	MAILED TO CONTR/ DATE RCD FRM APPR AUTH	REMARKS
(a)	(b)	(c)	(d)	(e)	(f)		(g)	(h)	(i)	(j)	(k)	(l)	(m)	(n)	(o)	(p)	(q)	(r)
		31 33 34	SD-04 Samples															
			Wick Drain	2.1														
			SD-07 Certificates															
			Certificates of Compliance	2.1	G													
			SD-11 Closeout Submittals															
			Construction Records	1.9.2	G													
		31 62 13.20	SD-01 Preconstruction Submittals															
			Installation Procedures	1.5.4	G													
			Piles	1.5.2	G													
			Aggregate	2.5.1	G													
			Compressive Strength	2.4.1	G													
			Compressive Strength	2.5.4	G													
			Slag	2.1.1.3	G													
			Wave Equation Analysis	3.2.1	G													
			Pile Driving Layout and	1.5.4	G													
			Sequencing															
			Concrete Records	2.4.1	G													
			Tensioning and Detensioning	2.4.6	G													
			Records															
			quality control procedures	1.5.3	G													
			Certificates	2.1.1.1	G													
			Order List	3.2.2	G													
			Pile Driving Log	3.4.3	G													
			SD-03 Product Data															
			Pile Driving Equipment	2.6	G													
			Pile Driving Equipment	3.1	G													

SUBMITTAL REGISTER

CONTRACT NO.

TITLE AND LOCATION
P-1515 Replace and Alter Fuel Distribution Facilities

CONTRACTOR

ACTIVITY NO	TRANSMITTAL NO	SPEC SECT	DESCRIPTION ITEM SUBMITTED	PARAGRAPH #	CLASSIFICATION	GOVT OR A/E REVWR	CONTRACTOR: SCHEDULE DATES			CONTRACTOR ACTION			APPROVING AUTHORITY					
							SUBMIT	APPROVAL NEEDED BY	MATERIAL NEEDED BY	ACTION CODE	DATE OF ACTION	DATE FWD TO APPR AUTH/ DATE RCD FROM CONTR	DATE FWD TO OTHER REVIEWER	DATE RCD FROM OTH REVIEWER	ACTION CODE	DATE OF ACTION	MAILED TO CONTR/ DATE RCD FRM APPR AUTH	REMARKS
(a)	(b)	(c)	(d)	(e)	(f)		(g)	(h)	(i)	(j)	(k)	(l)	(m)	(n)	(o)	(p)	(q)	(r)
		31 62 13.20	SD-05 Design Data															
			Concrete Mix Design	1.5.5	G													
			SD-06 Test Reports															
			Dynamic Pile Analysis	3.4.2	G													
			test piles	2.8														
			SD-07 Certificates															
			Admixtures	2.1.4														
			Silica fume manufacturer's	1.5.6														
			representative															
			Prestressing steel	2.1.6														
			Cement	2.1.1.1														
			Fly ash and Pozzolan	2.1.1.2														
			Ground Slag	1.5.5														
			Design Data	3.3.8														
			SD-11 Closeout Submittals															
			Pile records	3.4.3	G													
		31 62 99	SD-01 Preconstruction Submittals															
			Monitoring	1.8.1	G													
			Number, Locations and Type of	1.7.1	G													
			Seismographs Anticipated for Use															
			Condition Survey Report	1.6.1	G													
			SD-06 Test Reports															
			Site Vibration Records	3.2	G													
			SD-11 Closeout Submittals															
			Damage inspection survey	3.5.1	G													
			document															

SUBMITTAL REGISTER

CONTRACT NO.

TITLE AND LOCATION
P-1515 Replace and Alter Fuel Distribution Facilities

CONTRACTOR

ACTIVITY NO	TRANSMITTAL NO	SPEC SECT	DESCRIPTION ITEM SUBMITTED	PARAGRAPH #	CLASSIFICATION	GOVT OR A/E REVWR	CONTRACTOR: SCHEDULE DATES			CONTRACTOR ACTION			APPROVING AUTHORITY					
							SUBMIT	APPROVAL NEEDED BY	MATERIAL NEEDED BY	ACTION CODE	DATE OF ACTION	DATE FWD TO APPR AUTH/ DATE RCD FROM CONTR	DATE FWD TO OTHER REVIEWER	DATE RCD FROM OTH REVIEWER	ACTION CODE	DATE OF ACTION	MAILED TO CONTR/ DATE RCD FRM APPR AUTH	REMARKS
(a)	(b)	(c)	(d)	(e)	(f)		(g)	(h)	(i)	(j)	(k)	(l)	(m)	(n)	(o)	(p)	(q)	(r)
		32 05 33	SD-01 Preconstruction Submittals															
			Integrated Pest Management	2.4	G													
			Plan															
			SD-03 Product Data															
			Fertilizer	2.1	G													
			SD-07 Certificates															
			Maintenance inspection report	3.3.1														
			SD-10 Operation and Maintenance															
			Data															
			Maintenance	1.7														
		32 11 23	SD-03 Product Data															
			Plant, Equipment, and Tools	1.3														
			SD-06 Test Reports															
			Sampling and Testing	1.5	G													
			Field Density Tests	1.5.2.2	G													
		32 12 10	SD-06 Test Reports															
			Sampling and Testing	3.7														
		32 12 17	SD-05 Design Data															
			Job-mix formula	2.3.1	G													
			Asphalt Cement Binder	2.2														
			Mix Design	2.3														
			SD-06 Test Reports															
			Specific gravity test of asphalt	2.4.1	G													
			Coarse aggregate tests	2.4.1	G													
			Weight of slag test	2.4.1	G													

SUBMITTAL REGISTER

CONTRACT NO.

TITLE AND LOCATION
P-1515 Replace and Alter Fuel Distribution Facilities

CONTRACTOR

ACTIVITY NO	TRANSMITTAL NO	SPEC SECT	DESCRIPTION ITEM SUBMITTED	PARAGRAPH #	CLASSIFICATION	GOVT OR A/E REVWR	CONTRACTOR: SCHEDULE DATES			CONTRACTOR ACTION			APPROVING AUTHORITY					
							SUBMIT	APPROVAL NEEDED BY	MATERIAL NEEDED BY	ACTION CODE	DATE OF ACTION	DATE FWD TO APPR AUTH/ DATE RCD FROM CONTR	DATE FWD TO OTHER REVIEWER	DATE RCD FROM OTH REVIEWER	ACTION CODE	DATE OF ACTION	MAILED TO CONTR/ DATE RCD FRM APPR AUTH	REMARKS
(a)	(b)	(c)	(d)	(e)	(f)		(g)	(h)	(i)	(j)	(k)	(l)	(m)	(n)	(o)	(p)	(q)	(r)
		32 12 17	Percent of crushed pieces in	2.4.1	G													
			gravel															
			Fine aggregate tests	2.4.1	G													
			Specific gravity of mineral filler	2.4.1	G													
			Bituminous mixture tests	2.4.1	G													
			Aggregates tests	3.5.2.1	G													
			Bituminous mix tests	3.5.2.2	G													
			Pavement courses	3.5.2.3	G													
		32 17 23.00 20	SD-03 Product Data															
			Reflective media for roads and	2.1.2														
			streets															
			Paints for roads and streets	2.1.1														
			Equipment	1.5	G													
			Qualifications	1.8														
			SD-06 Test Reports															
			Reflective media for roads and	2.1.2														
			streets															
			Paints for roads and streets	2.1.1														
			SD-07 Certificates															
			Reflective media for roads and	2.1.2														
			streets															
			Paints for roads and streets	2.1.1														
			Construction equipment list	1.5														
			SD-08 Manufacturer's Instructions															
			Paints for roads and streets	2.1.1														
		32 92 19	SD-03 Product Data															

SUBMITTAL REGISTER

CONTRACT NO.

TITLE AND LOCATION
P-1515 Replace and Alter Fuel Distribution Facilities

CONTRACTOR

ACTIVITY NO	TRANSMITTAL NO	SPEC SECT	DESCRIPTION ITEM SUBMITTED	PARAGRAPH #	CLASSIFICATION	GOVT OR A/E REVWR	CONTRACTOR: SCHEDULE DATES			CONTRACTOR ACTION			APPROVING AUTHORITY					
							SUBMIT	APPROVAL NEEDED BY	MATERIAL NEEDED BY	ACTION CODE	DATE OF ACTION	DATE FWD TO APPR AUTH/ DATE RCD FROM CONTR	DATE FWD TO OTHER REVIEWER	DATE RCD FROM OTH REVIEWER	ACTION CODE	DATE OF ACTION	MAILED TO CONTR/ DATE RCD FRM APPR AUTH	REMARKS
(a)	(b)	(c)	(d)	(e)	(f)		(g)	(h)	(i)	(j)	(k)	(l)	(m)	(n)	(o)	(p)	(q)	(r)
		32 92 19	Wood cellulose fiber mulch	2.5.3														
			Fertilizer	2.4														
			SD-06 Test Reports															
			Topsoil composition tests	2.2.3														
			SD-07 Certificates															
			seed	2.1														
			SD-08 Manufacturer's Instructions															
			Erosion Control Materials	2.7														
		33 08 55	SD-01 Preconstruction Submittals															
			Commissioning Plan	1.4	G													
			SD-06 Test Reports															
			Piping Flushing Checklist	3.4.3	G													
			Control Valve Checklist	3.5.1	G													
			Commissioning Report	1.6	G													
			SD-07 Certificates															
			Certification of Completion	1.5														
			Disposal of Waste Materials	1.7														
		33 09 53.10	SD-02 Shop Drawings															
			Shop Drawing	3.2.1	G													
			SD-03 Product Data															
			Control Panel and Components		G													
			Day Tank Panel and		G													
			Components															
			Additive Tank Level Panel and		G													
			Components															
			SD-07 Certificates															

SUBMITTAL REGISTER

CONTRACT NO.

TITLE AND LOCATION
P-1515 Replace and Alter Fuel Distribution Facilities

CONTRACTOR

ACTIVITY NO	TRANSMITTAL NO	SPEC SECT	DESCRIPTION ITEM SUBMITTED	PARAGRAPH #	CLASSIFICATION	GOVT OR A/E REVWR	CONTRACTOR: SCHEDULE DATES			CONTRACTOR ACTION			APPROVING AUTHORITY					
							SUBMIT	APPROVAL NEEDED BY	MATERIAL NEEDED BY	ACTION CODE	DATE OF ACTION	DATE FWD TO APPR AUTH/ DATE RCD FROM CONTR	DATE FWD TO OTHER REVIEWER	DATE RCD FROM OTH REVIEWER	ACTION CODE	DATE OF ACTION	MAILED TO CONTR/ DATE RCD FRM APPR AUTH	REMARKS
(a)	(b)	(c)	(d)	(e)	(f)		(g)	(h)	(i)	(j)	(k)	(l)	(m)	(n)	(o)	(p)	(q)	(r)
		33 09 53.10	Experience and Qualifications	1.5	G													
			SD-10 Operation and Maintenance															
			Data															
			Operation and Maintenance	1.2	G													
			Manuals															
		33 11 00	SD-03 Product Data															
			Piping Materials	2.1.1														
			Water distribution main	2.1														
			Hydrants	2.1.2.2														
			Valve boxes	2.1.2.3														
			SD-06 Test Reports															
			Disinfection	2.2	G													
			SD-07 Certificates															
			Water distribution main	2.1														
			Lining	2.1.1.1														
			hydrants	2.1.2.2														
			SD-08 Manufacturer’s Instructions															
			Installation	3.1.1														
		33 40 00	SD-03 Product Data															
			Placing Pipe	3.3														
			Pipe for Culverts and Storm	2.1														
			Drains															
			Pipe for Containment Drains	2.2														
			Gaskets	2.4.4.1														
			Check Valve	2.4.5														
			Gate Valves	2.4.6														

SUBMITTAL REGISTER

CONTRACT NO.

TITLE AND LOCATION
P-1515 Replace and Alter Fuel Distribution Facilities

CONTRACTOR

ACTIVITY NO	TRANSMITTAL NO	SPEC SECT	DESCRIPTION ITEM SUBMITTED	PARAGRAPH #	CLASSIFICATION	GOVT OR A/E REVWR	CONTRACTOR: SCHEDULE DATES			CONTRACTOR ACTION			APPROVING AUTHORITY					
							SUBMIT	APPROVAL NEEDED BY	MATERIAL NEEDED BY	ACTION CODE	DATE OF ACTION	DATE FWD TO APPR AUTH/ DATE RCD FROM CONTR	DATE FWD TO OTHER REVIEWER	DATE RCD FROM OTH REVIEWER	ACTION CODE	DATE OF ACTION	MAILED TO CONTR/ DATE RCD FRM APPR AUTH	REMARKS
(a)	(b)	(c)	(d)	(e)	(f)		(g)	(h)	(i)	(j)	(k)	(l)	(m)	(n)	(o)	(p)	(q)	(r)
		33 40 00	Indicator Posts	2.4.6.1														
			SD-07 Certificates															
			Pipeline Testing	3.9														
			Hydrostatic Test on Watertight	2.8														
			Joints															
			Determination of Density	3.8.5														
			Frame and Cover for Gratings	2.4.3														
		33 52 43.14	SD-02 Shop Drawings															
			Overfill Prevention Valves	2.3.1	G													
			Truck Fill Stand Two-Stage	2.3.2	G													
			Set-Stop Control Valve (FCV-1															
			through FCV-6)															
			SD-03 Product Data															
			Control Valves	2.2	G													
			Overfill Prevention Valves	2.3.1	G													
			Truck Fill Stand Two-Stage	2.3.2	G													
			Set-Stop Control Valve (FCV-1															
			through FCV-6)															
			SD-06 Test Reports															
			Control Valves	2.2	G													
			Overfill Prevention Valves	2.3.1	G													
			Truck Fill Stand Two-Stage	2.3.2	G													
			Set-Stop Control Valve (FCV-1															
			through FCV-6)															
			SD-07 Certificates															

SUBMITTAL REGISTER

CONTRACT NO.

TITLE AND LOCATION
P-1515 Replace and Alter Fuel Distribution Facilities

CONTRACTOR

ACTIVITY NO	TRANSMITTAL NO	SPEC SECT	DESCRIPTION ITEM SUBMITTED	PARAGRAPH #	CLASSIFICATION	GOVT OR A/E REVWR	CONTRACTOR: SCHEDULE DATES			CONTRACTOR ACTION			APPROVING AUTHORITY					
							SUBMIT	APPROVAL NEEDED BY	MATERIAL NEEDED BY	ACTION CODE	DATE OF ACTION	DATE FWD TO APPR AUTH/ DATE RCD FROM CONTR	DATE FWD TO OTHER REVIEWER	DATE RCD FROM OTH REVIEWER	ACTION CODE	DATE OF ACTION	MAILED TO CONTR/ DATE RCD FRM APPR AUTH	REMARKS
(a)	(b)	(c)	(d)	(e)	(f)		(g)	(h)	(i)	(j)	(k)	(l)	(m)	(n)	(o)	(p)	(q)	(r)
		33 52 43.14	Previous Air Force/Military	1.4.1	G													
			Projects															
			Qualified Engineers	1.4.1	G													
			Field Assistance	1.4.1	G													
			SD-10 Operation and Maintenance															
			Data															
			Overfill Prevention Valves	2.3.1														
			Truck Fill Stand Two-Stage	2.3.2														
			Set-Stop Control Valve (FCV-1															
			through FCV-6)															
		33 52 43.23	SD-02 Shop Drawings															
			Truck Fillstand Pumps	2.2	G													
			Additive Offload Pump	2.5	G													
			Transfer Pump	2.3	G													
			Stripper Pumps	2.4	G													
			SD-03 Product Data															
			Truck Fillstand Pumps	2.2	G													
			Additive Offload Pump	2.5	G													
			Transfer Pump	2.3	G													
			Stripper Pumps	2.4	G													
			SD-06 Test Reports															
			Certified Test Curves	1.2	G													
			SD-07 Certificates															
			Truck Fillstand Pumps	2.2	G													
			Additive Offload Pump	2.5	G													
			Transfer Pump	2.3	G													

SUBMITTAL REGISTER

CONTRACT NO.

TITLE AND LOCATION
P-1515 Replace and Alter Fuel Distribution Facilities

CONTRACTOR

ACTIVITY NO	TRANSMITTAL NO	SPEC SECT	DESCRIPTION ITEM SUBMITTED	PARAGRAPH #	CLASSIFICATION	GOVT OR A/E REVWR	CONTRACTOR: SCHEDULE DATES			CONTRACTOR ACTION			APPROVING AUTHORITY					
							SUBMIT	APPROVAL NEEDED BY	MATERIAL NEEDED BY	ACTION CODE	DATE OF ACTION	DATE FWD TO APPR AUTH/ DATE RCD FROM CONTR	DATE FWD TO OTHER REVIEWER	DATE RCD FROM OTH REVIEWER	ACTION CODE	DATE OF ACTION	MAILED TO CONTR/ DATE RCD FRM APPR AUTH	REMARKS
(a)	(b)	(c)	(d)	(e)	(f)		(g)	(h)	(i)	(j)	(k)	(l)	(m)	(n)	(o)	(p)	(q)	(r)
		33 52 43.23	Stripper Pumps	2.4	G													
			SD-10 Operation and Maintenance															
			Data															
			Truck Fillstand Pumps	2.2														
			Additive Offload Pump	2.5														
			Transfer Pump	2.3														
			Stripper Pumps	2.4														
		33 52 43	SD-01 Preconstruction Submittals															
			Work Plan	1.4.3	G													
			SD-02 Shop Drawings															
			Grounding and Bonding	2.2.1														
			Pipe Supports	2.5.9														
			SD-03 Product Data															
			Flanges	2.3.1	G													
			Flange Gaskets, Non-Isolating	2.3.2	G													
			Flange Gaskets, Electrically	2.3.3	G													
			Isolating															
			Flange Protectors	2.3.4	G													
			Flange Bolts, Nuts, and Washers	2.3.5	G													
			Carbon Steel Pipe	2.4.1	G													
			Stainless Steel Pipe	2.4.2	G													
			Flexible Pipe Connector	2.5.5	G													
			Strainers	2.5.7	G													
			Pressure Gauge	2.5.8	G													
			Full-Opening Swing Check Valve	2.6.1														
			Dual-Plate Wafer Check Valve	2.6.2	G													

SUBMITTAL REGISTER

CONTRACT NO.

TITLE AND LOCATION
P-1515 Replace and Alter Fuel Distribution Facilities

CONTRACTOR

ACTIVITY NO	TRANSMITTAL NO	SPEC SECT	DESCRIPTION ITEM SUBMITTED	PARAGRAPH #	CLASSIFICATION	GOVT OR A/E REVWR	CONTRACTOR: SCHEDULE DATES			CONTRACTOR ACTION			APPROVING AUTHORITY					
							SUBMIT	APPROVAL NEEDED BY	MATERIAL NEEDED BY	ACTION CODE	DATE OF ACTION	DATE FWD TO APPR AUTH/ DATE RCD FROM CONTR	DATE FWD TO OTHER REVIEWER	DATE RCD FROM OTH REVIEWER	ACTION CODE	DATE OF ACTION	MAILED TO CONTR/ DATE RCD FRM APPR AUTH	REMARKS
(a)	(b)	(c)	(d)	(e)	(f)		(g)	(h)	(i)	(j)	(k)	(l)	(m)	(n)	(o)	(p)	(q)	(r)
		33 52 43	Ball Valve	2.6.3	G													
			Plug Valve (Double Block and	2.6.4	G													
			Bleed Type)															
			Safety Relief Valves	2.6.5														
			Thermal Relief Valve	2.6.6	G													
			Butterfly Valve with Fusible Link	2.6.7	G													
			Operator															
			Pipe Sleeve Seal	2.8.5	G													
			Flexible Ball Joint	2.5.6	G													
			SD-06 Test Reports															
			Exterior Coating Holiday Test	3.8.2.1	G													
			Preliminary Pneumatic Test	3.8.2.2	G													
			Final Pneumatic Test	3.8.2.3	G													
			Hydrostatic Test	3.8.2.4	G													
			SD-07 Certificates															
			Contractor Qualifications	1.4.2	G													
			Final Elevations and Location	3.5.7	G													
			Coordinates															
			SD-08 Manufacturer’s Instructions															
			Flexible Ball Joint	2.5.6														
			SD-10 Operation and Maintenance															
			Data															
			Strainers	2.5.7														
			Pressure Gauge	2.5.8														
			Dual-Plate Wafer Check Valve	2.6.2														
			Full-Opening Swing Check Valve	2.6.1														

SUBMITTAL REGISTER

CONTRACT NO.

TITLE AND LOCATION
P-1515 Replace and Alter Fuel Distribution Facilities

CONTRACTOR

ACTIVITY NO	TRANSMITTAL NO	SPEC SECT	DESCRIPTION ITEM SUBMITTED	PARAGRAPH #	CLASSIFICATION	GOVT OR A/E REVWR	CONTRACTOR: SCHEDULE DATES			CONTRACTOR ACTION			APPROVING AUTHORITY					
							SUBMIT	APPROVAL NEEDED BY	MATERIAL NEEDED BY	ACTION CODE	DATE OF ACTION	DATE FWD TO APPR AUTH/ DATE RCD FROM CONTR	DATE FWD TO OTHER REVIEWER	DATE RCD FROM OTH REVIEWER	ACTION CODE	DATE OF ACTION	MAILED TO CONTR/ DATE RCD FRM APPR AUTH	REMARKS
(a)	(b)	(c)	(d)	(e)	(f)		(g)	(h)	(i)	(j)	(k)	(l)	(m)	(n)	(o)	(p)	(q)	(r)
		33 52 43	Ball Valve	2.6.3														
			Plug Valve (Double Block and	2.6.4														
			Bleed Type)															
			Thermal Relief Valve	2.6.6														
			Butterfly Valve with Fusible Link	2.6.7														
			Operator															
			Pipe Sleeve Seal	2.8.5														
			Flexible Ball Joint	2.5.6														
		33 52 80	SD-03 Product Data															
			External Pipe Coating	2.1.1	G													
			Field-Applied External Pipe	3.2.1	G													
			Coating															
			Field-Applied Coating for Piping	2.2.2														
			Over Water															
			SD-06 Test Reports															
			Qualification Testing	2.2.1														
			Qualification Testing	2.2.1														
			Inspection Report Forms	2.2.4.2														
			Inspection Report Forms	3.4.2.2														
			Daily Inspection Reports	2.2.4.3														
			Daily Inspection Reports	3.4.2.3														
			SD-07 Certificates															
			Contract Errors, Omissions, and	1.4.1														
			Other Discrepancies															
			Corrective Action Procedures	1.4.2.1														
			Coating Work Plan	1.4.3														

SUBMITTAL REGISTER

CONTRACT NO.

TITLE AND LOCATION
P-1515 Replace and Alter Fuel Distribution Facilities

CONTRACTOR

ACTIVITY NO	TRANSMITTAL NO	SPEC SECT	DESCRIPTION ITEM SUBMITTED	PARAGRAPH #	CLASSIFICATION	GOVT OR A/E REVWR	CONTRACTOR: SCHEDULE DATES			CONTRACTOR ACTION			APPROVING AUTHORITY					
							SUBMIT	APPROVAL NEEDED BY	MATERIAL NEEDED BY	ACTION CODE	DATE OF ACTION	DATE FWD TO APPR AUTH/ DATE RCD FROM CONTR	DATE FWD TO OTHER REVIEWER	DATE RCD FROM OTH REVIEWER	ACTION CODE	DATE OF ACTION	MAILED TO CONTR/ DATE RCD FRM APPR AUTH	REMARKS
(a)	(b)	(c)	(d)	(e)	(f)		(g)	(h)	(i)	(j)	(k)	(l)	(m)	(n)	(o)	(p)	(q)	(r)
		33 52 80	Qualifications of Certified	1.4.4.1														
			Industrial Hygienist (CIH)															
			Qualifications of Pipe Coating	1.4.4.8														
			Shop															
			Qualifications of Certified	1.4.4.2														
			Protective Coatings Specialist															
			(PCS)															
			Qualifications of Coating	1.4.4.3														
			Inspection Company for Field															
			Coating															
			Qualifications of Coating	1.4.4.4														
			Inspector for Field Coating															
			Qualifications Of Individuals	1.4.4.5														
			Performing Abrasive Blasting for															
			Field Coating															
			Qualifications of Individuals	1.4.4.6														
			Performing Coating Application for															
			Field Coating															
			Qualifications of Individuals	1.4.4.7														
			Operating Plural Component															
			Equipment (Pump Tenders) for															
			Field Coating															
			Qualifications of Coating	1.4.4.9														
			Contractors															
			SD-11 Closeout Submittals															
			Inspection Logbook	3.4.2.4														

SUBMITTAL REGISTER

CONTRACT NO.

TITLE AND LOCATION
P-1515 Replace and Alter Fuel Distribution Facilities

CONTRACTOR

ACTIVITY NO	TRANSMITTAL NO	SPEC SECT	DESCRIPTION ITEM SUBMITTED	PARAGRAPH #	CLASSIFICATION	GOVT OR A/E REVWR	CONTRACTOR: SCHEDULE DATES			CONTRACTOR ACTION			APPROVING AUTHORITY					
							SUBMIT	APPROVAL NEEDED BY	MATERIAL NEEDED BY	ACTION CODE	DATE OF ACTION	DATE FWD TO APPR AUTH/ DATE RCD FROM CONTR	DATE FWD TO OTHER REVIEWER	DATE RCD FROM OTH REVIEWER	ACTION CODE	DATE OF ACTION	MAILED TO CONTR/ DATE RCD FRM APPR AUTH	REMARKS
(a)	(b)	(c)	(d)	(e)	(f)		(g)	(h)	(i)	(j)	(k)	(l)	(m)	(n)	(o)	(p)	(q)	(r)
		33 52 90.00 20	SD-01 Preconstruction Submittals															
			Welding procedure specification	1.6.2	G													
			Welding Operations	3.1	G													
			NDE Testing Procedures	3.2.3	G													
			SD-02 Shop Drawings															
			POL Service Piping	1.6.2	G													
			Weld Map	1.6.4	G													
			SD-06 Test Reports															
			Inspection Reports	1.6.4	G													
		33 56 10	SD-02 Shop Drawings															
			Grounding and Bonding	2.4.2	G													
			Tank deadman anchors or	2.11.2.1	G													
			hold-down slab															
			SD-03 Product Data															
			Aboveground Storage Tank	2.7	G													
			Aboveground Storage Tank	2.7	G													
			Aboveground Storage Tank	2.7	G													
			Aboveground Storage Tank	2.7	G													
			Underground Storage Tank	2.11	G													
			Tank Protective Coatings	2.8.2	G													
			Tank Levels Panel (TLP) and	2.6	G													
			ATG System															
			Level Alarm System	2.6	G													
			Tank Gauges	3.4	G													
			Tank Manway and Inspection	2.7.2.1	G													
			Hatch															

SUBMITTAL REGISTER

CONTRACT NO.

TITLE AND LOCATION
P-1515 Replace and Alter Fuel Distribution Facilities

CONTRACTOR

ACTIVITY NO	TRANSMITTAL NO	SPEC SECT	DESCRIPTION ITEM SUBMITTED	PARAGRAPH #	CLASSIFICATION	GOVT OR A/E REVWR	CONTRACTOR: SCHEDULE DATES			CONTRACTOR ACTION			APPROVING AUTHORITY					
							SUBMIT	APPROVAL NEEDED BY	MATERIAL NEEDED BY	ACTION CODE	DATE OF ACTION	DATE FWD TO APPR AUTH/ DATE RCD FROM CONTR	DATE FWD TO OTHER REVIEWER	DATE RCD FROM OTH REVIEWER	ACTION CODE	DATE OF ACTION	MAILED TO CONTR/ DATE RCD FRM APPR AUTH	REMARKS
(a)	(b)	(c)	(d)	(e)	(f)		(g)	(h)	(i)	(j)	(k)	(l)	(m)	(n)	(o)	(p)	(q)	(r)
		33 56 10	Tank Mixers	2.7.3.6	G													
			Tank Anchoring	2.11.2.1	G													
			Pressure/Vacuum Conservation	2.7.3.1	G													
			Vent															
			Level Indicator	2.7.3.5	G													
			Mechanical Level Gauge	2.10.4.5	G													
			Emergency Vent	2.7.3.2	G													
			SD-05 Design Data															
			Calculations for deadman anchor	2.11.2.1	G													
			or hold-down slab															
			SD-06 Test Reports															
			Aboveground Storage Tank	3.2.1	G													
			Tightness Tests															
			Underground Storage Tank	3.2.2	G													
			Tightness Tests															
			Tank Manufacturer's Tests	3.2.3														
			Tank Fill Tests	3.4														
			SD-07 Certificates															
			Contractor Qualifications	1.4.1	G													
			Permitting	1.4.2.1														
			Registration	1.4.2.2														
			Licensed Personnel	1.4.2.3														
			Demonstrations	3.3														
			SD-08 Manufacturer’s Instructions															
			Aboveground Storage Tank	2.7	G													
			Aboveground Storage Tank	2.7	G													

SUBMITTAL REGISTER

CONTRACT NO.

TITLE AND LOCATION
P-1515 Replace and Alter Fuel Distribution Facilities

CONTRACTOR

ACTIVITY NO	TRANSMITTAL NO	SPEC SECT	DESCRIPTION ITEM SUBMITTED	PARAGRAPH #	CLASSIFICATION	GOVT OR A/E REVWR	CONTRACTOR: SCHEDULE DATES			CONTRACTOR ACTION			APPROVING AUTHORITY					
							SUBMIT	APPROVAL NEEDED BY	MATERIAL NEEDED BY	ACTION CODE	DATE OF ACTION	DATE FWD TO APPR AUTH/ DATE RCD FROM CONTR	DATE FWD TO OTHER REVIEWER	DATE RCD FROM OTH REVIEWER	ACTION CODE	DATE OF ACTION	MAILED TO CONTR/ DATE RCD FRM APPR AUTH	REMARKS
(a)	(b)	(c)	(d)	(e)	(f)		(g)	(h)	(i)	(j)	(k)	(l)	(m)	(n)	(o)	(p)	(q)	(r)
		33 56 10	Aboveground Storage Tank	2.7	G													
			Aboveground Storage Tank	2.7	G													
			Underground Storage Tank	2.11	G													
			Tank Levels Panel (TLP) and	2.6	G													
			ATG System															
			Level Alarm System	2.6	G													
			Tank Gauges	3.4	G													
			Tank Mixers	2.7.3.6	G													
			SD-10 Operation and Maintenance															
			Data															
			Aboveground Storage Tank	2.7	G													
			Aboveground Storage Tank	2.7	G													
			Aboveground Storage Tank	2.7	G													
			Aboveground Storage Tank	2.7	G													
			Underground Storage Tank	2.11	G													
			Tank Levels Panel (TLP) and	2.6	G													
			ATG System															
			Level Alarm System	2.6	G													
			Tank Gauges	3.4	G													
			Tank Mixers	2.7.3.6	G													
		33 56 13.13	SD-01 Preconstruction Submittals															
			Copies of API Publications	1.3	G													
			NACE Visual Comparator	3.3.6	G													
			Acknowledgement of surface	3.3.6	G													
			finish requirements															

SUBMITTAL REGISTER

CONTRACT NO.

TITLE AND LOCATION
P-1515 Replace and Alter Fuel Distribution Facilities

CONTRACTOR

ACTIVITY NO	TRANSMITTAL NO	SPEC SECT	DESCRIPTION ITEM SUBMITTED	PARAGRAPH #	CLASSIFICATION	GOVT OR A/E REVWR	CONTRACTOR: SCHEDULE DATES			CONTRACTOR ACTION			APPROVING AUTHORITY					
							SUBMIT	APPROVAL NEEDED BY	MATERIAL NEEDED BY	ACTION CODE	DATE OF ACTION	DATE FWD TO APPR AUTH/ DATE RCD FROM CONTR	DATE FWD TO OTHER REVIEWER	DATE RCD FROM OTH REVIEWER	ACTION CODE	DATE OF ACTION	MAILED TO CONTR/ DATE RCD FRM APPR AUTH	REMARKS
(a)	(b)	(c)	(d)	(e)	(f)		(g)	(h)	(i)	(j)	(k)	(l)	(m)	(n)	(o)	(p)	(q)	(r)
		33 56 13.13	Acknowledgement of API Std 650	1.4	G													
			and API Std 653															
			SD-02 Shop Drawings															
			Steel tank alterations	1.9.2	G													
			Steel tank alterations	1.9.3	G													
			Floating pan	2.12.2	G													
			Overflow/Circulation Vents	2.12.6.1	G													
			Channel mounting pads	2.12.12	G													
			SD-03 Product Data															
			Carbon steel, pipe fittings,	2.3	G													
			flanges, gaskets, and bolting															
			Structural steel	2.2	G													
			Floating pan	2.12.2	G													
			Mechanical tape level gauge	2.12.5	G													
			Gaskets for Manhole Covers and	2.9	G													
			Stilling Well Flanges															
			Aluminum piping	2.5	G													
			Aluminum flanges	2.6	G													
			Antiseize compound	2.12.11	G													
			Floating Seal and Retrieval	2.12.4	G													
			Winch															
			SD-05 Design Data															
			Floating pan design	1.9.3	G													
			SD-06 Test Reports															
			Visual examination of vertical	3.6.2														
			shell-seam tack welds															

SUBMITTAL REGISTER

CONTRACT NO.

TITLE AND LOCATION
P-1515 Replace and Alter Fuel Distribution Facilities

CONTRACTOR

ACTIVITY NO	TRANSMITTAL NO	SPEC SECT	DESCRIPTION ITEM SUBMITTED	PARAGRAPH #	CLASSIFICATION	GOVT OR A/E REVWR	CONTRACTOR: SCHEDULE DATES			CONTRACTOR ACTION			APPROVING AUTHORITY					
							SUBMIT	APPROVAL NEEDED BY	MATERIAL NEEDED BY	ACTION CODE	DATE OF ACTION	DATE FWD TO APPR AUTH/ DATE RCD FROM CONTR	DATE FWD TO OTHER REVIEWER	DATE RCD FROM OTH REVIEWER	ACTION CODE	DATE OF ACTION	MAILED TO CONTR/ DATE RCD FRM APPR AUTH	REMARKS
(a)	(b)	(c)	(d)	(e)	(f)		(g)	(h)	(i)	(j)	(k)	(l)	(m)	(n)	(o)	(p)	(q)	(r)
		33 56 13.13	Visual examination of shell butt	3.6.2														
			welds															
			Visual examination of fillet welds	3.6.2														
			Pneumatic tests of reinforcing	3.6.2														
			plates															
			Cathodic Protection System	3.6.5														
			Verification Report															
			SD-07 Certificates															
			Welding Procedure Specifications	1.6.1														
			(WPS)															
			Welding Procedure Qualification	1.6.1														
			Records (PQRs)															
			Welder Performance Qualification	1.6.1														
			Records (WPQ)															
			Qualifications of tank Contractor	1.6														
			Qualifications of floating pan	1.8														
			manufacturer															
			Qualifications of API Std 653	1.9.7														
			Inspector															
			Weld Inspector Certification	1.9.4														
			NDE Personnel Certification	1.9.6.1														
			Qualifications of Testing Agency	1.9.6.2														
			Tank calibration experience	1.7														
			SD-09 Manufacturer's Field															
			Reports															
			Floating pan prototype fire test	2.12.2.2	G													

SUBMITTAL REGISTER

CONTRACT NO.

TITLE AND LOCATION
P-1515 Replace and Alter Fuel Distribution Facilities

CONTRACTOR

ACTIVITY NO	TRANSMITTAL NO	SPEC SECT	DESCRIPTION ITEM SUBMITTED	PARAGRAPH #	CLASSIFICATION	GOVT OR A/E REVWR	CONTRACTOR: SCHEDULE DATES			CONTRACTOR ACTION			APPROVING AUTHORITY				MAILED TO CONTR/	REMARKS
							SUBMIT	APPROVAL NEEDED BY	MATERIAL NEEDED BY	ACTION CODE	DATE OF ACTION	DATE FWD TO APPR AUTH/ DATE RCD FROM CONTR	DATE FWD TO OTHER REVIEWER	DATE RCD FROM OTH REVIEWER	ACTION CODE	DATE OF ACTION	DATE RCD FRM APPR AUTH	
(a)	(b)	(c)	(d)	(e)	(f)		(g)	(h)	(i)	(j)	(k)	(l)	(m)	(n)	(o)	(p)	(q)	(r)
		33 56 13.13	Mill test reports	2.2	G													
			Impact Test Data	2.2	G													
			SD-10 Operation and Maintenance															
			Data															
			Tank calibration table	3.6.1														
			Electronic Calibration Table	3.6.1														
			API Std 653 inspection reports	3.2														
			Maintenance instructions	3.6.6														
			Operator instructions	3.6.7														
		33 57 00.10	SD-01 Preconstruction Submittals															
			MLAE Work Plan	1.2.3	G													
			Crane Critical Lift Plan	1.3.1	G													
			SD-02 Shop Drawings															
			Detail Drawings	2.1	G													
			SD-06 Test Reports															
			Crane Reports	1.4.1														
			Pre-Takedown and	1.2.2	G													
			Pre-Installation Inspections Report															
			Field Tests Reports	3.4.2	G													
			Acceptance Testing	3.5	G													
			Loss of Power Test	3.5.6	G													
			Grounding Test	3.5.3	G													
			SD-07 Certificates															
			Certificate of Compliance	1.4.2														
			SD-08 Manufacturer's Instructions															
			MLAE	Part 1	G													

SUBMITTAL REGISTER

CONTRACT NO.

TITLE AND LOCATION
P-1515 Replace and Alter Fuel Distribution Facilities

CONTRACTOR

ACTIVITY NO	TRANSMITTAL NO	SPEC SECT	DESCRIPTION ITEM SUBMITTED	PARAGRAPH #	CLASSIFICATION	GOVT OR A/E REVWR	CONTRACTOR: SCHEDULE DATES			CONTRACTOR ACTION			APPROVING AUTHORITY					
							SUBMIT	APPROVAL NEEDED BY	MATERIAL NEEDED BY	ACTION CODE	DATE OF ACTION	DATE FWD TO APPR AUTH/ DATE RCD FROM CONTR	DATE FWD TO OTHER REVIEWER	DATE RCD FROM OTH REVIEWER	ACTION CODE	DATE OF ACTION	MAILED TO CONTR/ DATE RCD FRM APPR AUTH	REMARKS
(a)	(b)	(c)	(d)	(e)	(f)		(g)	(h)	(i)	(j)	(k)	(l)	(m)	(n)	(o)	(p)	(q)	(r)
		33 57 00.10	SD-11 Closeout Submittals															
			Field Tests Reports	3.4.2	G													
			Grounding Test	3.5.3	G													
			Pressure Test Reports	3.5.5	G													
		33 57 00.20	SD-01 Preconstruction Submittals															
			MLAE Work Plan	1.4.2	G													
			Crane Critical Lift Plan	1.5.1	G													
			SD-02 Shop Drawings															
			Marine Loading Arm (MLAE)	2.2	G													
			SD-06 Test Reports															
			Crane Reports	1.6.1														
			Pre-Installation Inspection Report	1.6.2	G													
			Field Tests Reports	3.4.2	G													
			Acceptance Testing	3.5	G													
			Loss of Power Test	3.5.6	G													
			Grounding Test	3.5.3	G													
			SD-07 Certificates															
			Certificate of Compliance	1.6.3														
			SD-08 Manufacturer’s Instructions															
			MLAE	Part 1	G													
			MLAE	2.1	G													
			SD-10 Operation and Maintenance															
			Data															
			MLAE	Part 1														
			MLAE	2.1														
			SD-11 Closeout Submittals															

SUBMITTAL REGISTER

CONTRACT NO.

TITLE AND LOCATION
P-1515 Replace and Alter Fuel Distribution Facilities

CONTRACTOR

ACTIVITY NO	TRANSMITTAL NO	SPEC SECT	DESCRIPTION ITEM SUBMITTED	PARAGRAPH #	CLASSIFICATION	GOVT OR A/E REVWR	CONTRACTOR: SCHEDULE DATES			CONTRACTOR ACTION			APPROVING AUTHORITY					
							SUBMIT	APPROVAL NEEDED BY	MATERIAL NEEDED BY	ACTION CODE	DATE OF ACTION	DATE FWD TO APPR AUTH/ DATE RCD FROM CONTR	DATE FWD TO OTHER REVIEWER	DATE RCD FROM OTH REVIEWER	ACTION CODE	DATE OF ACTION	MAILED TO CONTR/ DATE RCD FRM APPR AUTH	REMARKS
(a)	(b)	(c)	(d)	(e)	(f)		(g)	(h)	(i)	(j)	(k)	(l)	(m)	(n)	(o)	(p)	(q)	(r)
		33 57 00.20	Field Tests Reports	3.4.2	G													
			Grounding Test	3.5.3	G													
			Pressure Test Reports	3.5.5	G													
		33 57 00	SD-03 Product Data															
			Truck Fillstand Loading Arm	2.4	G													
			Pressure Indicating Transmitter	2.5	G													
			Recondition Positive	2.8	G													
			Displacement Meters															
			Turbine Meter Assemblies	2.9	G													
			Dry-Break Coupler	2.11	G													
			Control Stations	2.15														
			Flash Point Monitor	2.16	G													
			Additive Injector	2.17	G													
			SD-10 Operation and Maintenance															
			Data															
			Truck Fillstand Loading Arm	2.4														
			Pressure Indicating Transmitter	2.5														
			Recondition Positive	2.8														
			Displacement Meters															
			Turbine Meter Assemblies	2.9														
			Control Stations	2.15														
			Flash Point Monitor	2.16														
			Additive Injector	2.17														
		33 65 00	SD-03 Product Data															
			Cleaning agents	2.1.1														

SUBMITTAL REGISTER

CONTRACT NO.

TITLE AND LOCATION
P-1515 Replace and Alter Fuel Distribution Facilities

CONTRACTOR

ACTIVITY NO	TRANSMITTAL NO	SPEC SECT	DESCRIPTION ITEM SUBMITTED	PARAGRAPH #	CLASSIFICATION	GOVT OR A/E REVWR	CONTRACTOR: SCHEDULE DATES			CONTRACTOR ACTION			APPROVING AUTHORITY					
							SUBMIT	APPROVAL NEEDED BY	MATERIAL NEEDED BY	ACTION CODE	DATE OF ACTION	DATE FWD TO APPR AUTH/ DATE RCD FROM CONTR	DATE FWD TO OTHER REVIEWER	DATE RCD FROM OTH REVIEWER	ACTION CODE	DATE OF ACTION	MAILED TO CONTR/ DATE RCD FRM APPR AUTH	REMARKS
(a)	(b)	(c)	(d)	(e)	(f)		(g)	(h)	(i)	(j)	(k)	(l)	(m)	(n)	(o)	(p)	(q)	(r)
		33 65 00	Gasoline-oil-resisting rubber	2.2														
			gloves and boots															
			Cotton coveralls and hard hat	2.2														
			Respiratory protective equipment	2.2														
			Disinfectant	2.2														
			SD-06 Test Reports															
			Monitoring Results	1.4.9	G													
			SD-07 Certificates															
			Qualifications of Marine Chemist	1.4.8.1														
			Qualifications of Certified	1.4.8.2														
			Industrial Hygienist (CIH)															
			Testing laboratory	1.4.8.3														
			Safety plan	1.4.8.4														
			Work plan	1.4.8.5														
			Tank certification of safety	1.4.8.6														
			Training certification	1.4.8.4														
			Respiratory protective equipment	2.2														
			Breathing-air supply source	2.2														
			Combustible gas indicator	2.2														
			Hydrogen-sulfide (H2S) indicator	2.2														
			Benzene indicator	2.2														
			Oxygen meter	2.2														
			Velometers	2.2														
			Lighting	2.2														
			First aid kit	2.2														
			exhaust	1.6.1														

SUBMITTAL REGISTER

CONTRACT NO.

TITLE AND LOCATION
P-1515 Replace and Alter Fuel Distribution Facilities

CONTRACTOR

ACTIVITY NO	TRANSMITTAL NO	SPEC SECT	DESCRIPTION ITEM SUBMITTED	PARAGRAPH #	CLASSIFICATION	GOVT OR A/E REVWR	CONTRACTOR: SCHEDULE DATES			CONTRACTOR ACTION			APPROVING AUTHORITY					
							SUBMIT	APPROVAL NEEDED BY	MATERIAL NEEDED BY	ACTION CODE	DATE OF ACTION	DATE FWD TO APPR AUTH/ DATE RCD FROM CONTR	DATE FWD TO OTHER REVIEWER	DATE RCD FROM OTH REVIEWER	ACTION CODE	DATE OF ACTION	MAILED TO CONTR/ DATE RCD FRM APPR AUTH	REMARKS
(a)	(b)	(c)	(d)	(e)	(f)		(g)	(h)	(i)	(j)	(k)	(l)	(m)	(n)	(o)	(p)	(q)	(r)
		33 65 00	SD-08 Manufacturer's Instructions															
			cleaning agents	2.1.1														
			SD-11 Closeout Submittals															
			Safety permits	1.4.3														
		33 71 02	SD-02 Shop Drawings															
			Precast underground structures	1.4.1	G													
			SD-03 Product Data															
			Medium voltage cable	2.5	G													
			Medium voltage cable joints	2.7	G													
			Medium voltage cable	2.6	G													
			terminations															
			Precast concrete structures	2.12.2.1	G													
			Sealing Material	2.12.2.4														
			Pulling-In Irons	3.5.3														
			Manhole frames and covers		G													
			Handhole frames and covers	2.12.4	G													
			Cable supports	2.13	G													
			SD-06 Test Reports															
			Medium voltage cable	2.15.2	G													
			qualification and production tests															
			Field Acceptance Checks and	3.18.1	G													
			Tests															
			Arc-proofing test	2.15.1	G													
			Cable Installation Plan and		G													
			Procedure															
			SD-07 Certificates															

SUBMITTAL REGISTER

CONTRACT NO.

TITLE AND LOCATION
P-1515 Replace and Alter Fuel Distribution Facilities

CONTRACTOR

ACTIVITY NO	TRANSMITTAL NO	SPEC SECT	DESCRIPTION ITEM SUBMITTED	PARAGRAPH #	CLASSIFICATION	GOVT OR A/E REVWR	CONTRACTOR: SCHEDULE DATES			CONTRACTOR ACTION			APPROVING AUTHORITY				MAILED TO CONTR/	REMARKS
							SUBMIT	APPROVAL NEEDED BY	MATERIAL NEEDED BY	ACTION CODE	DATE OF ACTION	DATE FWD TO APPR AUTH/ DATE RCD FROM CONTR	DATE FWD TO OTHER REVIEWER	DATE RCD FROM OTH REVIEWER	ACTION CODE	DATE OF ACTION	DATE RCD FRM APPR AUTH	
(a)	(b)	(c)	(d)	(e)	(f)		(g)	(h)	(i)	(j)	(k)	(l)	(m)	(n)	(o)	(p)	(q)	(r)
		33 71 02	Cable splicer/terminator	1.4.2	G													
			Cable Installer Qualifications	1.4.3	G													

SECTION 01 33 29.00 20

SUSTAINABLE REQUIREMENTS
08/13

PART 1 GENERAL

1.1 REFERENCES

The publications listed below form a part of this specification to the extent referenced. The publications are referred to within the text by the basic designation only.

U.S. DEPARTMENT OF DEFENSE (DOD)

UFC 1-200-02	High Performance and Sustainable Building Requirements

U.S. DEPARTMENT OF ENERGY (DOE)

ISWG Guiding Principles	(2008) High Performance and Sustainable Buildings Guidance

1.2 SUBMITTALS

Government approval is required for submittals with a "G" designation; submittals not having a "G" designation are for Contractor Quality Control approval. The following shall be submitted in accordance with Section 01 33 00 SUBMITTAL PROCEDURES:

SD-01 Preconstruction Submittals

Preliminary Sustainability Notebook Submittal; G

Preliminary High Performance and Sustainable Building Checklist; G

SD-11 Closeout Submittals

Final Sustainability Notebook Submittal; G

Final High Performance and Sustainable Building (HPSB/NSEDRC) Checklist; G

1.3 GUIDING PRINCIPLES VALIDATION (GPV)

Provide construction related sustainable documentation to verify achievement of ISWG Guiding Principles Validation (GPV) and completion of High Performance Sustainable Building (HPSB) Checklist. (This is the same checklist called NAVFAC Sustainability and Energy Data record card (NSEDRC) items in Attachment 1 following this specification section).

Provide the following for GPV:

a. A completed HPSB/NSEDRC Checklist, using the HPSB/NSEDRC Checklist in Attachment 1 following this specification section. Further definitions and requirements are provided in paragraph HPSB/NSEDRC CHECKLIST.

b. Government approval of any changes to the HPSB/NSEDRC Checklist from

the Contracting Officer at the Preconstruction Conference. Contracting Officer's approval establishes identified ISWG Guiding Principles Requirements as the project's sustainability goals.

No variations or substitutions to the sustainability requirements are allowed without written consent from the Contracting Officer. Immediately bring to the attention of the Contracting Officer any changes that impact meeting the approved ISWG Guiding Principles Requirements for this project and demonstrate that change will not incur additional construction cost or increase the life cycle cost.

c. Completion of all work required to incorporate the applicable ISWG Guiding Principles Requirements indicated on the HPSB/NSEDRC Checklist and in this contract.

d. Provision of construction related documentation to the Contracting Officer to maintain an up-to-date Sustainability Notebook. Supplement construction related documentation containing the following components;

(1) HPSB/NSEDRC Checklist

(2) Sustainability Action Plan

(3) Documentation of Guiding Principle Requirements compliance

1.3.1 Sustainability Action Plan

Include the following information in the Sustainability Action Plan:

a. Contractor confirmation to achieve each construction related GP requirement.

b. For each designated construction related ISWG Guiding Principles Requirement that is not achieved, provide narrative explaining how mission, activity, or lack of funded scope for mandatory requirements precludes achieving specific sustainability requirement or goal. Provide analysis of particular requirement and level to which project is able to comply.

c. Name and contact information for: Contractor's Sustainable POC and other sustainability professional on the Contractor's Staff responsible for ensuring sustainability goals are accomplished and documentation is assembled.

1.3.2 Responsibilities

Contractor is responsible for all costs associated with constructing and demonstrating that project complies with approved ISWG Guiding Principles Requirements.

1.3.3 Calculations

Provide calculations and/or product data required in this section to demonstrate compliance with the ISWG Guiding Principles Requirements.

1.4 SUSTAINABILITY SUBMITTALS REQUIREMENTS

Provide documentation in the Sustainability Notebook and the HPSB/NSEDRC Checklist to indicate compliance with the sustainability requirements of

the project.

1.4.1 SUSTAINABILITY NOTEBOOK

Provide and maintain a Sustainability Notebook to document compliance with the sustainability requirements identified in the approved HPSB/NSEDRC Checklist. Sustainability Notebook must contain all required data to support full compliance with the ISWG Guiding Principles Requirements. Sustainability Notebook is in the form of an Adobe PDF file; bookmarked at each ISWG Guiding Principles Requirement and sub-bookmarked at each document. Match format to ISWG Guiding Principles numbering system indicated herein. Maintain up to date information, spreadsheets, calculations, etc. with each current submittal.

Contracting Officer may deduct from the monthly progress payment accordingly if Sustainability Notebook information is not current, until information is updated and on track per project goals.

1.4.1.1 Sustainability Notebook Submittal Schedule

Provide Sustainability Notebook Submittals at the following milestones of the project:

a. Preliminary Sustainability Notebook Submittal

Submit preliminary Sustainability Notebook for approval at the Pre-construction conference.

b. Final Sustainability Notebook Submittal

Submit updated Sustainability Notebook within 60 days after the Beneficial Occupancy Date (BOD). Final progress payment retainage may be held by Contracting Officer until Final Sustainable construction phase documentation is complete. Submit three (3) electronic copies of the Final Sustainability Notebook on DVDs to the Government.

1.4.2 HIGH PERFORMANCE SUSTAINABLE BUILDING (HPSB/NSEDRC) CHECKLIST

Provide construction documentation that provides proof of and supports compliance with the completed HBSP/NSEDRC Checklist.

1.4.2.1 HPSB/NSEDRC Checklist Submittal Schedule

Submit an updated copy of the HPSB/NSEDRC Checklist in the Sustainability Notebook.

a. Preliminary High Performance and Sustainable Building Checklist (HPSB/NSEDRC) at the Pre-construction meeting.

b. Final High Performance and Sustainable Building (HPSB/NSEDRC) Checklist not less than 60 days after BOD.

The Checklist form is found at the following link;
http://www.wbdg.org/pdfs/navfac_sustainable_energy_data_record_card.pdf

1.5 DOCUMENTATION REQUIREMENTS

Incorporate each of the following ISWG Guiding Principles Requirements into project construction; and provide documentation that proves compliance with

each listed requirement. Items below are organized according to the ISWG Guiding Principles. Note that the ISWG Guiding Principles use Roman numerals to denote categories of requirements. The below list adds additional enumeration to further break down the ISWG Guiding Principles into the ISWG Guiding Principles Requirements.

1.5.1 Commissioning

Using a qualified commissioning (Cx) authority, develop and implement a Cx plan and complete a summary Cx report, in accordance with Specification Section 33 08 55 Commissioning of Fuel Facility Systems. Refer to documentation requirements in Section 33 08 55.

1.5.2 Energy Efficient Equipment

GP Denotation - II.a.2.

Provide only energy-using equipment that is Energy Star rated, or has the Federal Energy Management Program (FEMP) recommended efficiency. Where Energy Star or FEMP recommendations have not been established, provide equipment with efficiency in the top 25 percent for the type of equipment procured. DLA Policy further requires that motors and pumps for hydrant fuel systems, storage tanks and pipelines shall be rated in the top 5% of energy efficiency. Provide only energy using equipment that meets FEMP requirements for low standby power consumption. Energy efficient equipment can be found at: http://www1.eere.energy.gov/femp/ and http://www.energystar.gov/.

Provide the following documentation:

Proof that equipment is energy efficient and complies with the cited requirements.

1.5.3 Reduce Volatile Organic Compounds (VOC)

GP Denotation - IV.d.

Provide materials and products with ingredients, components and emissions that meet the volatile organic compound levels cited in UFC 1-200-02, "High Performance and Sustainable Building Requirements". Products include adhesives, sealants, paints and coatings.

Provide the following documentation:

a. Documentation showing that materials do not exceed maximum VOC emissions of cited standards. Use VOC averaging to assure maximum adhesive, sealant, paint and coating performance on items that are subject to human contact or harsh environmental conditions.

b. Documentation showing that insulation installed in building interior meets cited standards.

1.5.4 Indoor Air Quality During Construction

GP Denotation - IV.e.

Prior to construction, create indoor air quality plan and implement IAQ plan during construction.

Provide the following documentation:

IAQ management plan for the construction and preoccupancy phases of the building that has been developed and implemented in accordance with Sheet Metal and Air Conditioning Contractor's National Association (SMACNA) Indoor Air Quality Guidelines for Occupied Buildings Under Construction 2007.

Provide required documentation showing that new HVAC filters were installed after construction ended and prior to occupancy.

1.5.5 Recycled Content

Denotation - V.a.

Provide materials on this project with aggregated total recycled content greater than 10 percent

Provide the following documentation:

a. Documentation showing total amount of recycled content contained in building materials as a percentage of total cost of all building materials on the project (mechanical, electrical, and plumbing components, and specialty items excluded).

1.5.6 Bio-Based Products

GP Denotation - V.b.1

Use bio-based products as appropriate to the building use. Bio-based is defined as commercial or industrial products (other than food or feed) that are composed in whole, or in significant part, of biological products, renewable agricultural materials (including plant, animal, and marine materials), or forestry materials. Refer to www.biopreferred.gov.

Provide the following documentation for any applicable materials:

Documentation to indicate bio-based products have been used.

1.5.7 Landfill Disposal

GP Denotation - V.d.1

Divert 50 percent or more of construction waste from landfill disposal.

Provide the following documentation:

Documentation showing total amount of construction debris diverted from landfill as a percentage of all construction debris on the project.

Include project's Construction Waste Management Plan and all dumpster haul tickets.

1.5.8 Ozone Depleting Substances

GP Denotation - V.e

Eliminate the use of ozone depleting substances during and after construction where alternative environmentally preferable products are

available and in accordance with either the Montreal Protocol and Title VI of the Clean Air Act Amendment of 1990 or equivalent overall air quality benefits that take into account lifecycle impacts.

Provide the following documentation:

a. MSDS sheets or product technical data for all refrigerants provided

b. Products that meet the criteria of U.S. EPA Significant New Alternatives Policy, available at http://www.epa.gov/ozone/snap/index.html.

1.5.9 Validation and Certification Restrictions

The purchase of renewable energy credits (RECs) to meet project sustainable goals is prohibited.

PART 2 PRODUCTS

Not used.

PART 3 EXECUTION

3.1 SUSTAINABILITY COORDINATION

3.1.1 Coordinating Sustainability Documentation Progress

Provide sustainability focus and coordination at the following meetings to achieve sustainability goals. Contractor's designated sustainability professional responsible for GP documentation must participate in the following meetings to coordinate documentation completion.

a. Pre-Construction Conference: Discuss the following: HPSB/NSEDRC Checklist, Sustainability Action Plan, Construction submittal requirements and schedule, individuals responsible for achieving each Guiding Principle Requirement.

b. Project Closeout Meetings (Begin closeout meetings no later than 75 percent construction complete): Review Sustainability Notebook for completeness and identify any outstanding issues relating to final documentation requirements.

c. Final Sustainability Notebook Review

3.2 ATTACHMENTS

3.2.1 NAVFAC Sustainable Energy Data Record Card (NSEDRC)

3.2.2 Sustainability Action Plan

-- End of Section --

Use this form if project is greater than $750K for new construction, or greater than 50% PRV. At Kick-off, PM completes project-specific elements here and on "Sustainable and Energy" tab and downloads form for DOR. At Final Design Submittal, PM receives and loads design elements into tab. At Beneficial Occupancy, PM receives and updates information into tab.

NAVFAC SUSTAINABILITY AND ENERGY DATA ---- *NEW CONSTRUCTION & MAJOR RENOVATION*

PROJECT INFORMATION

eProjects Work Order No.: 1,302,502 FY 15 Project Dollar Amount _____

Project Name: REPLACE AND ALTER FUEL DISTRIBUTION FACILITIES

Location/UIC: DFSP CRANEY ISLAND, VA & FUEL TERMINAL, NWS YORKTOWN, VA

MILCON P No. / Client Project No. MILCON P-1515

Project Design Level:

- [ ] Design Build
- [x] Design Bid Build

Project Phase:

- [x] Solicitation Documents Complete (Draft)
- [ ] Construction Complete (Final)

Project Type: MILCON *(from eProjects definition, such as MILCON)*

If "Other Construction" describe, such as PPV/Lease Construct

Facility Area: 187 U/M: _____ *(if known)* Category Code: _____ Bldg #: _____ *(if known)*

NAVFAC Project Manager: MR. JOHN MOORE, HR IPT (757) 341-1517 john.a.moore4@navy.mil

AE Contract # & T.O. 3

AE Firm Name: BURNS & MCDONNELL CONTRACT# SAES N62583-10-D-0409, TO# WE01 DATED 25 JANUARY 2013

AE Firm Sustainability Coordinator: STEPHANIE GRAHAM

(Planned or Actual) *(Planned or Actual)*

Construction Contract & T.O. Award Date: _____ BOD: _____

Construction Contractor: _____

Contractor's Sustainability Coordinator: _____ *(if not yet awarded leave blank)*

SUSTAINABILITY DATA - GUIDING PRINCIPLES for SUSTAINABLE NEW CONSTRUCTION and MAJOR RENOVATION

For each item below not met, attach justification via "Design & Criteria" note on project "Notes" tab

Sustainability Third Party Rating System

- [ ] GBI Green Globes
- [ ] USGBC LEED
- [x] Not Applicable

A Sustainability Certification Level - Target

- [ ] LEED Certified
- [ ] LEED Silver
- [ ] 1 Globe
- [ ] 2 Globes

B Sustainability Certification Level - Achieved

- [ ] LEED Certified
- [ ] LEED Silver
- [ ] LEED Gold
- [ ] LEED Platinum
- [ ] 1 Globe
- [ ] 2 Globes
- [ ] 3 Globes
- [ ] 4 Globes

C Sustainability Certification Level - Cost _____

I. Employ Integrated Design Principles

I.a Integrated Design

- [x] Included
- [ ] Not Included

I.b Commissioning *(Select one)*

- [ ] Enhanced Commissioning (Verification of Performance)
- [ ] No Commissioning
- [x] Fundamental Commissioning (Minimum systems: HVAC, Domestic Hot Water, Lighting Controls, Renewables)

i Commissioning Cost ($) _____

Use this form if project is greater than $750K for new construction, or greater than 50% PRV. At Kick-off, PM completes project-specific elements here and on "Sustainable and Energy" tab and downloads form for DOR. At Final Design Submittal, PM receives and loads design elements into tab. At Beneficial Occupancy, PM receives and updates information into tab.

II. Optimize Energy Performance

II.a Energy Efficiency *(New=30%, Renovation=20% below ASHRAE 90.1)*

i Energy Reduction Below ASHRAE 90.1

- ☐ 10%
- ☐ 20%
- ☐ 30%
- ☐ 40%
- ☐ 50%
- ☐ 60%
- ☐ 70%
- ☐ 80%

ii Efficiency Standard *(Identify the ASHRAE standard used)*

- ☐ 90.1 2004
- ☑ 90.1 2007
- ☐ 90.1 2010
- ☐ 189.1

iii New Technology: Provide description CAN ACHIEVE 6.4% PER LCCA. VARIABLE REFRIGERANT FLOW, LED LIGHTING, IMPROVED BUILDING INSULATION VALUES AND ENVELOPE, EXGTERIOR SUN SHADING, HIGH SRI WALLS AND ROOFING

(Identify if it is technology that is not already listed within this tab.)

a. New Technology cost ($) _____

iv Energy-Efficient Products (percent) _____

(Specify Energy Star-labeled products)

II.b On-Site Renewable Energy

i. Solar Hot Water Demand *(30% target, per EISA 2007, Section 523 LCCA <40 years)*

- ☐ 10%
- ☐ 20%
- ☐ 30%
- ☐ 40%
- ☐ 50%

a. Solar Hot Water Demand cost _____

ii. Renewable energy technology types *(Per EISA 2007, Section 441 LCCA <40 ears [Select all that apply])*

- ☐ Daylighting
- ☐ Geothermal
- ☐ Ground Source Heat Pumps
- ☐ Mechanical (i.e., direct water pumping)
- ☐ Solar Photovoltaic
- ☐ Solar Thermal (including water and space conditioning)
- ☐ Wind

a Renewable energy technology types cost ($) _____

iii. Sustainable Roof Attribute *(Select all that apply)*

- ☐ Cool - white
- ☑ Cool - reflective
- ☐ Vegetated
- ☐ Solar PV
- ☐ Solar Thermal

a. Sustainable Roof Attribute Cost ($) _____

II.c Building-level Metering (Measurement)

- ☑ Included
- ☐ Not Included

III. Protect and Conserve Water

III.a Indoor Water

i Reduce potable water *(20% target below baseline Meet EPAct 1992, UPC 2006, and IPC 2006 fixture performance)*

- ☐ 10%
- ☐ 20%
- ☐ 30%
- ☐ 40%
- ☐ 50%
- ☐ 60%

ii Building-level Metering (Measurement)

- ☐ Included
- ☑ Not Included

Use this form if project is greater than $750K for new construction, or greater than 50% PRV. At Kick-off, PM completes project-specific elements here and on "Sustainable and Energy" tab and downloads form for DOR. At Final Design Submittal, PM receives and loads design elements into tab. At Beneficial Occupancy, PM receives and updates information into tab.

III.b Outdoor Water

i Reduce landscape water *(50% target below conventional methods)*

☐ 50% below conventional ☑ 100%

III.c Process Water (percent) _____ *(EPAct 2005 section 109)*

III.d Water-Efficient Products (percent) _____ *(Specify EPA's WaterSense-labeled products)*

IV. Enhance Indoor Environmental Quality

IV.a Ventilation and Thermal Comfort

i Thermal Environmental Conditions *ASHRAE 55*

☑ Met ☐ Not Met

ii Ventilation *ASHRAE 62.1*

☑ Met ☐ Not Met

IV.b Moisture Control Plan *Per WBDG*

☑ Included ☐ Not Included

IV.c Daylighting

i Minimum Daylight *meet requirements of UFC 1-200-02*

☐ Met ☑ Not Met

ii Automatic dimming controls

☐ Included ☑ Not Included

IV.d Low-Emitting Materials *Per ASHRAE 189.1, 8.4.2 or 8.5.2*

☑ Met ☐ Not Met

IV.e Protect Indoor Air Quality during Construction *(Per SMACCNA IAQ Guidelines)*

☑ Met ☐ Not Met

V. Reduce Environmental Impact of Materials

V.a Recycled Content: www.epa/gov/cpg *10% (5% post and 5% pre-consumer)*

☐ Met ☐ Not Met

V.b Biobased Products *Per USDA-designated products*

☐ Met ☐ Not Met

V.c Waste and Materials Management

i. Waste Diversion *60% of non-hazardous construction, demolition, and land clearing*

☑ 50% ☐ 80%

☐ 60% ☐ 90%

☐ 70%

ii. Waste Management *(Recycling storage/collection in building design)*

☑ Included ☐ Not Included

V.d Ozone Depleting Compounds *(No use of CFC-based refrigerants)*

☑ Met ☐ Not Met

Sustainability Action Plan: Guiding Principles for Sustainable New Construction and Major Renovations

For each of the Guiding Principles Requirements that is not attempted or achieved, provide narrative explaining how effects on the project for each Guiding Principle precludes achieving specific sustainability requirement or goal. Provide analysis of particular requirement and level to which project is able to comply.

I. Employ Integrated Design Principles	Standards and Codes	Sustainability Action Plan (Blue = Contractor Requirements)
• **Integrated Design**. Use a collaborative, integrated planning and design process that initiates and maintains an integrated project team in all stages of a project's planning and delivery: o Integrates the use of OMB's A-11, Section 7, Exhibit 300: Capital Asset Plan and Business Case Summary, o Establishes performance goals for siting, energy, water, materials, and indoor environmental quality along with other comprehensive design goals and ensures incorporation of these goals throughout the design and lifecycle of the building, o Considers all stages of the building's lifecycle, including deconstruction.	UFC1-200-02 SEC 2-2.1 and ASHRAE 189.1 APPENDIX H UFC1-200-02 SEC 1-7 for LCCA	The design team employed integrated design for the building design, though the scale of this building is quite small. The team discussed options for the LCCA studies to explore optimal energy efficiency measures to implement. Since the building is not regularly occupied, little attention was given to improved IEQ strategies, other than to meet ASHRAE 55 and 62.1 for thermal comfort and ventilation. There are no water systems, minimal siting, no renewable energy and very limited materials involved in the project. Materials were chosen for extreme durability and mildew resistance. With the exception of the LCCA study, no additional business case or capital asset plans were developed.
• **Commissioning**. Employ commissioning practices tailored to the size and complexity of the building and its system components in order to verify performance of building components and systems and help ensure that design requirements are met. This should include an experienced commissioning provider, inclusion of commissioning requirements in construction documents, a commissioning plan, verification of the installation and performance of systems to be commissioned, and a commissioning report.	UFC1-200-02 SEC 2-2.2 and ASHRAE 189.1 SEC 10.3.	**Fueling systems will be commissioned only. For commissioning of the fueling systems refer to Specification Section 33 08 55 Commissioning of Fuel Facility Systems.** For the Operator's Enclosure, less than 87 SF of the building is occupied on occasion. There are no domestic water systems nor renewable energy systems and limited indoor conditioning and lighting controls (limited to one space), therefore the building will not be commissioned.

II. Optimize Energy Performance	Standards and Codes	Sustainability Action Plan (Blue = Contractor Requirements)
• **Energy Efficiency**. Establish a whole building performance target that takes into account the intended use, occupancy, operations, plug loads, other energy demands, and design to earn the ENERGY STAR® targets for new construction and major renovation where applicable. For new construction, reduce the energy use by 30 percent compared to the baseline building performance rating per the American National Standards Institute (ANSI)/American Society of Heating, Refrigerating and Air-Conditioning Engineers, Inc., (ASHRAE)/Illuminating Engineering Society of North America (IESNA) Standard 90.1-2007, Energy Standard for Buildings Except Low-Rise Residential. Use ENERGY STAR® and FEMP-designated Energy Efficient Products, where available.	UFC 1-200-02 SEC 2-3.2 SEC 2-3.3 ASHRAE 90.1 UFC 1-200-02 SEC 2-4	Due to the small size and limited occupancy of the operator's enclosure, energy efficiency measures will be optimized, but cannot achieve the required 30% reduction from ASHRAE 90.1-2007 baseline. Refer to the Mechanical Life Cycle Cost Analysis for a description of LCCA studies performed for the building design. Strategies include improved insulation in the walls and roof of the operator's enclosure, tinted windows with exterior sun shades, variable refrigerant flow system and LED interior and site lighting. Average watts per square foot will be 1 or less. Occupancy sensors will be provided integral to the light switches. Lighting is specified to meet ENERGY STAR. **Per specification section 01 33 29.00 20, Contractor shall purchase Energy Star and FEMP-designated products wherever possible. If not available, equipment, motors and pumps shall be in the top 5% energy efficiency available. Refer to DLA Memorandum, Subject: DLA Sustainability and Energy Efficiency Policy, dated Dec. 4, 2012 for additional information.**
• **On-Site Renewable Energy**. Per EISA 2007 Section 523, meet at least 30% of the hot water demand through the installation of solar hot water heaters, when lifecycle cost effective. Per Executive Order 13423, implement renewable energy generation projects on agency property for agency use, when lifecycle cost effective.	UFC 1-200-02 SEC 2-4.2.1 EISA SEC 523 UFC 1-200-02 SEC 2-4.2 and IEEE 1547	Not Applicable. Since the project involves relocation of an existing fueling facility, there are no regularly occupied buildings and there are no water systems incorporated in this project. The Operator's Enclosure building is only 187 SF. A renewable energy system would not be life cycle cost effective.

• **Measurement and Verification**. Per EPAct 2005 Section 103, install building level electricity meters in new major construction and renovation projects to track and continuously optimize performance. Per EISA Section 434, include equivalent meters for natural gas and steam, where natural gas and steam are used.	UFC 1-200-02 SEC 2-4.4 and DODI 4170.11; ASHRAE 189.1 SEC 7.3.3 (submetering)	Metering is appropriate to the project scope. The operator's enclosure is metered for electrical only. The fueling is metered both on receipt and on points of issue. All tanks have automatic tank gauging for monitoring of fuel levels. The site transformer is metered so all electricity used at the new truck fill stand will be monitored.
• **Benchmarking**. Compare actual performance data from the first year of operation with the energy design target, preferably by using ENERGY STAR® Portfolio Manager for building and space types covered by ENERGY STAR®. Verify that the building performance meets or exceeds the design target, or that actual energy use is within 10% of the design energy budget for all other building types.		Not Applicable. This facility type is not included in ENERGY STAR's Portfolio Manager facility types.
III. Protect and Conserve Water	**Standards and Codes**	**Sustainability Action Plan (Blue = Contractor Requirements)**
• **Indoor Water**. Employ strategies that in aggregate use a minimum of 20 percent less potable water than the indoor water use baseline calculated for the building, after meeting the EPAct 1992, UPC 2006, and the International Plumbing Codes 2006 fixture performance requirements. The installation of water meters is encouraged to allow for the management of water use during occupancy. The use of harvested rainwater, treated wastewater, and A/C condensate should also be considered and used where feasible for nonpotable use and potable use where allowed.	UFC 1-200-02 SEC 2-5.1 SEC 2-5.5	Not Applicable. Since the project is a relocation of an existing fueling facility, there are no regularly occupied buildings. The only enclosed structure is a 187 SF non-regularly occupied Operator's Enclosure which consists of a station and electrical room. There are no interior plumbing systems. In addition, due to the nature of the project, there are no water systems incorporated into this project—interior or exterior, therefore no water meters are required.
• **Process Water**. Per the EPAct 2005 Section 109, when potable water is used to improve a building's energy efficiency, deploy lifecycle cost effective water conservation measures.	UFC 1-200-02 SEC 2-5.4	Not Applicable. Due to the nature of the project, there are no process water systems incorporated into this project—interior or exterior.

• **Outdoor Water**. Use water efficient landscape and irrigation strategies, such as water reuse, recycling, and the use of harvested rainwater, to reduce outdoor potable water consumption by a minimum of 50 percent over that consumed by conventional means (plant species and plant densities). The installation of water meters for locations with significant outdoor water use is encouraged. • Employ design and construction strategies that reduce storm water runoff and discharges of polluted water offsite. Per EISA Section 438, to the maximum extent technically feasible, maintain or restore the predevelopment hydrology of the site with regard to temperature, rate, volume, and duration of flow using site planning, design, construction, and maintenance strategies.	UFC 1-200-02 SEC 2-5.3 and SEC 2-5.5 UFC 1-200-02 SEC 2-3.4	Not Applicable. Due to the nature of the project, there are no outdoor water systems incorporated into this project, therefore no water meters are required. The limited landscaping will be to reseed disturbed areas with a native grass mix requiring no irrigation. Storm drainage system modifications within the Truck Fillstand Area will be required due to its location. Methods to address Low Impact Development (LID) and stormwater treatment requirements will be maximized to the extent possible to meet the EISA 438 requirements. Refer to Civil Design Analysis for further information. Limited landscaping is included in the project scope. Any areas that are disturbed by construction, and not repaved, will be seeded and mulched using a local seed mix.
• **Water-Efficient Products**. Specify EPA's WaterSense-labeled products or other water conserving products, where available. Choose irrigation contractors who are certified through a WaterSense labeled program.	UFC 1-200-02 SEC 2-5.2	Not Applicable. Due to the nature of the project, there are no water systems incorporated into this project—interior or exterior.
IV. Enhance Indoor Environmental Quality	**Standards and Codes**	**Sustainability Action Plan (Blue = Contractor Requirements)**
• **Ventilation and Thermal Comfort**. Meet ASHRAE Standard 55-2004, Thermal Environmental Conditions for Human Occupancy, including continuous humidity control within established ranges per climate zone, and ASHRAE Standard 62.1-2007, Ventilation for Acceptable Indoor Air Quality.	UFC 1-200-02 SEC 2-6.1	The Operator's Enclosure is not a regularly occupied space, however, the workspace area is designed to meet ASHRAE 62.1 minimum requirements and ASHRAE 55 when the space is occupied.

• **Moisture Control**. Establish and implement a moisture control strategy for controlling moisture flows and condensation to prevent building damage, minimize mold contamination, and reduce health risks related to moisture through proper storage prior to installation and not installing moisture damaged materials. See UFC.	UFC 1-200-02 SEC 2-6.2 UFC3-101-01 CHAPTER 3 ASHRAE 189.1 SEC 10.3.1.5	The operator's enclosure is a pre-fabricated, insulated and pre-assembled metal building that is elevated 6 inches above slab on a skid. Interior finishes are metal liner panels and metal floor for moisture control. **Per specification section 01 45 00.00 20, Part 3, the contractor is required to store construction materials, in a clean dry location prior to installation.**
• **Daylighting**. Achieve a minimum daylight factor of 2 percent from sidelighting (excluding all direct sunlight penetration) in 75 percent of all space occupied for critical visual tasks. Provide automatic dimming controls or accessible manual lighting controls, and appropriate glare control; OR daylight simulation with 30 fc minimum at 30" AFF for 75% of area of daylight area.	UFC 1-200-02 SEC 2-6.2 ASHRAE 189.1 SEC 8.4.1 and SEC8.5.1	Not Applicable. This requirement is not required since the Operator's Enclosure is not a regularly occupied space. However, the workspace area requires visual observance of operations by means of windows. These windows will provide minimal daylighting to the space, as well as views to the operations.
• **Low-Emitting Materials**. Specify materials and products with low pollutant emissions, including composite wood products, adhesives, sealants, interior paints and finishes, carpet systems, and furnishings.	UFC 1-200-02 SEC 2-6.3 ASHRAE 189.1 SEC 8.4.2 SEC 8.5.2	**While the materials are not VOC-emitting, Specification section 01 33 29.00 20 requires that any adhesives, sealants and coating finishes used will be low-emitting.**
• **Protect Indoor Air Quality during Construction**. Follow the recommended approach of the SMACNA Indoor Air Quality Guidelines for Occupied Buildings under Construction, 2007. After construction and prior to occupancy, conduct a minimum 72-hour flush-out with maximum outdoor air consistent with achieving relative humidity no greater than 60 percent. After occupancy, continue flush-out as necessary to minimize exposure to contaminants from new building materials.	UFC 1-200-02 SEC 2-6.4 ASHRAE 189.1 SEC 10.3.1.4	**The Operator's Enclosure is not a regularly occupied space. Per specification section 01 33 29.00 20, protection of IAQ during construction is required, but strict adherence to an IAQ Construction management Plan during construction and a pre-occupancy flush out of the building will not be required. Section 01 33 29.00 20 requires the Contractor to provide clean filtration for HVAC systems prior to occupancy.**
• **Environmental Tobacco Smoke Control.** Implement a policy and post signage indicating that smoking is prohibited within the building and within 25 feet of all building entrances, operable windows, and building ventilation intakes during building occupancy.		The base has a no-smoking policy inside buildings. Drawings show signage on the operator enclosure building door, reading "No smoking within 25 feet of Building."

V. Reduce Environmental Impact of Materials	Standards and Codes	Sustainability Action Plan (Blue = Contractor Requirements)
• **Recycled Content**. Per Section 6002 of the Resource Conservation and Recovery Act (RCRA) (PDF), for EPA-designated products, specify products meeting or exceeding EPA's recycled content recommendations. For other products, specify materials with recycled content when practicable. If EPA-designated products meet performance requirements and are available at a reasonable cost, a preference for purchasing them shall be included in all solicitations relevant to construction, operation, maintenance of or use in the building. EPA's recycled content product designations and recycled content recommendations are available on EPA's Comprehensive Procurement Guideline website.	UFC 1-200-02 SEC 2-7.2	**Specification Sections 01 33 29.00 20 and 01 62 35 require the contractor to use products that meet or exceed EPA's recycled content recommendations to the extent possible and practicable.** **Though opportunities will be limited, the use of recycled content materials for the pre-engineered metal panels and roof for the building, as well as insulation will contribute to meeting this requirement.**
• **Biobased Content**. Per Section 9002 of the Farm Security and Rural Investment Act (FSRIA), for USDA-designated products, specify products with the highest content level per USDA's biobased content recommendations. For other products, specify biobased products made from rapidly renewable resources and certified sustainable wood products. If these designated products meet performance requirements and are available at a reasonable cost, a preference for purchasing them shall be included in all solicitations relevant to construction, operation, maintenance of or use in the building. USDA's biobased product designations and biobased content recommendations are available on USDA's BioPreferred website.	UFC 1-200-02 SEC 2-7.3	**Specification Sections 01 33 29.00 20 and 01 62 35 require the contractor to use products with the highest content level per USDA's biobased content recommendations to the extent possible and as practicable for the project.** **We anticipate that bio-based materials, as a rule, will not be appropriate building materials for the operator's enclosure, as these materials would be susceptible to moisture retention, causing mildew or mold. However, products such as equipment lubricants, hydraulic fluids, fuel additives, engine oils, sealers, greases, expanded polystyrene, office and cleaning products may be used during construction or in the on-going operation of the project.**

• **Environmentally Preferable Product**. Use products that have a lesser or reduced effect on human health and the environment over their lifecycle when compared with competing products or services that serve the same purpose. A number of standards and ecolabels are available in the marketplace to assist specifiers in making environmentally preferable decisions. For recommendations, consult the Federal Green Construction Guide for Specifiers.	UFC 1-200-02 SEC 2-7.1	**Specification Section 01 33 29.00 20 requires the contractor to use products that have a lesser or reduced effect on human health and the environment over their lifecycle when compared with competing products or services that serve the same purpose to the extent possible and as practicable for the project.**
• **Waste and Materials Management**. Incorporate adequate space, equipment, and transport accommodations for recycling in the building design. During a project's planning stage, identify local recycling and salvage operations that could process site-related construction and demolition materials. During construction, recycle or salvage at least 50 percent of the non-hazardous construction, demolition and land clearing materials, excluding soil, where markets or onsite recycling opportunities exist. Provide salvage, reuse and recycling services for waste generated from major renovations, where markets or onsite recycling opportunities exist.	UFC 1-200-02 SEC 2-7.4 and ASHRAE 189.1 SEC 9.3.1.1, SEC 9.3.4.1	**Specification Sections 01 33 29.00 20 and 01 74 19 require the contractor to divert a minimum of 50% of the demolition and construction non-hazardous waste from landfill by means of salvaging, reusing or recycling materials.** In addition, the plans show that recycle container for the operator's enclosure should be provided by the owner.
• **Ozone Depleting Compounds**. Eliminate the use of ozone depleting compounds during and after construction where alternative environmentally preferable products are available, consistent with either the Montreal Protocol and Title VI of the Clean Air Act Amendments of 1990, or equivalent overall air quality benefits that take into account lifecycle impacts (No CFCs).	UFC 1-200-02 SEC 2-7.5 ASHRAE 189.1 SEC 9.3.3 UFC 3-600-01	**The air conditioning unit in the Operator's Enclosure uses R-410 refrigerant, which contains no CFCs or HCFCs. Contractor shall confirm the equipment purchased meets this requirement per specification section 01 33 29.00 20.**

Additional Criteria in 1-200-02	Standards and Codes	Sustainability Action Plan (Blue = Contractor Requirements)
• **Site Selection**.	UFC 2-100-01 UFC 3-101-01	Not applicable to this project.
• **Mitigation of Heat Island Effect**. 50% Hardscape with: shade within 10 years from native and diverse plants; OR SRI 29 or 35 for new standard concrete; permeable pavers, pavement or gravel; OR underground parking with high SRI/cool roof; OR shaded by buildings or structures. Walls and Above-Grade Retaining Walls: Shade 30% E and W walls to 20 feet within 5 years (native and diverse if vegetated) or 75% of E and W walls have SRI 29 minimum. Exceptions by climate zone. Roof: Per UFC 3-110-03	ASHRAE 189.1 SEC 5.3.2.1 (hardscape) ASHRAE 189.1 SEC 5.3.2.2 (walls) UFC 3-110-03 (roof)	Budget for the project will require the use of asphalt rather than concrete surfaces for pavements. The walls for the Operator's Enclosure are specified to have a high SRI of at least 29 and will have sun shades over the windows on the west and south. The roof will be a Cool Roof with an SRI of at least 78.
• **Reduction of Light Pollution**.	UFC 3-530-01	Due to requirements of this facility type, opportunity for light pollution reduction is limited. Exterior lighting at the Truck Fillstand includes canopy lighting for truck loading operations, area lighting on 30 foot aluminum poles around tanks and ingress/egress driveway points, and wall packs located above both doors of the Operator's Enclosure. All exterior lighting at the Truck Fillstand will be controlled utilizing a 6-pole lighting contactor with a photocell located on the roof of the Operator's Enclosure. Illumination levels under the Truck Fillstand canopy will be 10 fc average and the gauging area on top of the tanks will be 1 fc average per API 540. The frequently used road to this facility is illuminated to 0.4 fc.
• **Stormwater Management.** **(See III. Protect and Conserve Water above)**	UFC 3-210-10	The project will meet EISA 438 requirements to the maximum extent possible. Refer to Civil Design Analysis for further information.

SECTION 01 35 26

GOVERNMENTAL SAFETY REQUIREMENTS
02/12

PART 1 GENERAL

1.1 REFERENCES

The publications listed below form a part of this specification to the extent referenced. The publications are referred to within the text by the basic designation only.

AMERICAN SOCIETY OF SAFETY ENGINEERS (ASSE/SAFE)

ASSE/SAFE A10.32	(2012) Fall Protection
ASSE/SAFE A10.34	(2001; R 2012) Protection of the Public on or Adjacent to Construction Sites
ASSE/SAFE Z359.1	(2007) Safety Requirements for Personal Fall Arrest Systems, Subsystems and Components

ASME INTERNATIONAL (ASME)

ASME B30.22	(2010) Articulating Boom Cranes
ASME B30.3	(2012) Tower Cranes
ASME B30.5	(2011) Mobile and Locomotive Cranes
ASME B30.8	(2010) Floating Cranes and Floating Derricks

NATIONAL FIRE PROTECTION ASSOCIATION (NFPA)

NFPA 10	(2013) Standard for Portable Fire Extinguishers
NFPA 241	(2013) Standard for Safeguarding Construction,Alteration, and Demolition Operations
NFPA 51B	(2014) Standard for Fire Prevention During Welding, Cutting, and Other Hot Work
NFPA 70	(2014; AMD 1 2013; Errata 2013; AMD 2 2013) National Electrical Code
NFPA 70E	(2012; Errata 2012) Standard for Electrical Safety in the Workplace

U.S. ARMY CORPS OF ENGINEERS (USACE)

EM 385-1-1	(2008; Errata 1-2010; Changes 1-3 2010; Changes 4-6 2011; Change 7 2012) Safety and Health Requirements Manual

U.S. NATIONAL ARCHIVES AND RECORDS ADMINISTRATION (NARA)

29 CFR 1910	Occupational Safety and Health Standards
29 CFR 1910.146	Permit-required Confined Spaces
29 CFR 1915	Confined and Enclosed Spaces and Other Dangerous Atmospheres in Shipyard Employment
29 CFR 1919	Gear Certification
29 CFR 1926	Safety and Health Regulations for Construction
29 CFR 1926.1400	Cranes & Derricks in Construction
29 CFR 1926.500	Fall Protection
CPL 2.100	(1995) Application of the Permit-Required Confined Spaces (PRCS) Standards, 29 CFR 1910.146

U.S. NAVAL FACILITIES ENGINEERING COMMAND (NAVFAC)

NAVFAC P-307	(2009; Change 1 Mar 2011; Change 2 Aug 2011)Management of Weight Handling Equipment

1.2 DEFINITIONS

a. Competent Person for Fall Protection. A person who is capable of identifying hazardous or dangerous conditions in the personal fall arrest system or any component thereof, as well as their application and use with related equipment, and has the authority to take prompt corrective measures to eliminate the hazards of falling.

b. High Visibility Accident. Any mishap which may generate publicity or high visibility.

c. Medical Treatment. Treatment administered by a physician or by registered professional personnel under the standing orders of a physician. Medical treatment does not include first aid treatment even through provided by a physician or registered personnel.

d. Operating Envelope. The area surrounding any crane. Inside this "envelope" is the crane, the operator, riggers and crane walkers, rigging gear between the hook and the load, the load and the crane's supporting structure (ground, rail, etc.).

e. Recordable Injuries or Illnesses. Any work-related injury or illness that results in:

(1) Death, regardless of the time between the injury and death, or the length of the illness;

(2) Days away from work (any time lost after day of injury/illness onset);

(3) Restricted work;

(4) Transfer to another job;

(5) Medical treatment beyond first aid;

(6) Loss of consciousness; or

(7) A significant injury or illness diagnosed by a physician or other licensed health care professional, even if it did not result in (1) through (6) above.

f. "USACE" property and equipment specified in USACE EM 385-1-1 should be interpreted as Government property and equipment.

g. Weight Handling Equipment (WHE) Accident. A WHE accident occurs when any one or more of the eight elements in the operating envelope fails to perform correctly during operation, including operation during maintenance or testing resulting in personnel injury or death; material or equipment damage; dropped load; derailment; two-blocking; overload; or collision, including unplanned contact between the load, crane, or other objects. A dropped load, derailment, two-blocking, overload and collision are considered accidents even though no material damage or injury occurs. A component failure (e.g., motor burnout, gear tooth failure, bearing failure) is not considered an accident solely due to material or equipment damage unless the component failure results in damage to other components (e.g., dropped boom, dropped load, roll over, etc.) Any mishap meeting the criteria described above shall be documented in both the Contractor Significant Incident Report (CSIR) and using the NAVFAC prescribed Navy Crane Center (NCC) form submitted within five days both as provided by the Contracting Officer. Comply with additional requirements and procedures for accidents in accordance with NAVFAC P-307, Section 12.

1.3 SUBMITTALS

Government approval is required for submittals with a "G" designation; submittals not having a "G" designation are for Contractor Quality Control approval. Submit the following in accordance with Section 01 33 00 SUBMITTAL PROCEDURES:

SD-01 Preconstruction Submittals

Accident Prevention Plan (APP); G

Activity Hazard Analysis (AHA); G

Crane Critical Lift Plan; G

Proof of qualification for Crane Operators; G

SD-06 Test Reports

Notifications and Reports

Submit reports as their incidence occurs, in accordance with the requirements of the paragraph, "Notifications and Reports."

Accident Reports

Crane Reports

SD-07 Certificates

Confined Space Entry Permit

Hot work permit

Contractor Safety Self-Evaluation Checklist; G

Third Party Certification of Barge-Mounted Mobile Cranes

Certificate of Compliance (Crane)

Submit one copy of each permit/certificate attached to each Daily Quality Control Report.

1.4 CONTRACTOR SAFETY SELF-EVALUATION CHECKLIST

Contracting Officer will provide a "Contractor Safety Self-Evaluation checklist" to the Contractor at the pre-construction conference. Complete the checklist monthly and submit with each request for payment voucher. An acceptable score of 90 or greater is required. Failure to submit the completed safety self-evaluation checklist or achieve a score of at least 90 may result in retention of up to 10 percent of the voucher. Additionally, provide a Monthly Exposure Report and attach to the monthly billing request. This report is a compilation of employee-hours worked each month for all site workers, both prime and subcontractor. Failure to submit the report may result in retention of up to 10 percent of the voucher. The Contracting Officer will submit a copy of the Contractor Safety Self-Evaluation and Monthly Exposure Report to the local safety and occupational health office.

1.5 REGULATORY REQUIREMENTS

In addition to the detailed requirements included in the provisions of this contract, comply with the most recent edition of USACE EM 385-1-1, and the following federal, state, and local laws, ordinances, criteria, rules and regulations. Submit matters of interpretation of standards to the appropriate administrative agency for resolution before starting work. Where the requirements of this specification, applicable laws, criteria, ordinances, regulations, and referenced documents vary, the most stringent requirements govern.

1.6 SITE QUALIFICATIONS, DUTIES AND MEETINGS

1.6.1 Personnel Qualifications

1.6.1.1 Site Safety and Health Officer (SSHO)

Provide a Site Safety and Health Officer (SSHO) at the work site at all times to perform safety and occupational health management, surveillance, inspections, and safety enforcement for the Contractor. The Contractor Quality Control (QC) person cannot be the SSHO on this project, even though the QC has safety inspection responsibilities as part of the QC duties. Meet the following requirements within the SSHO:

a. Level 5:

1. An Associate Safety Professional (ASP), Certified Safety Trained Supervisor (STS) and/or Construction Safety Trained Supervisor (STS) and/or Construction Health & Safety Technician (CHST).

2. A minimum of 10 years safety work of a progressive nature with at least 5 years of experience on similar projects.

3. 40-hour OSHA construction safety class or equivalent within the last 5 years.

4. An average of at least 24 hours of formal safety training each year for the past 5 years with training for competent person status for at least the following 4 areas of competency; Excavation; Scaffolding; Fall protection; Hazardous energy; Confined space; Health hazard recognition, evaluation and control of chemical, physical and biological agents; Personal protective equipment and clothing to include selection, use and maintenance.

1.6.1.2 Competent Person for Confined Space Entry

Provide a "Competent Person" to supervise the entry into each confined space. That individual must meet the requirements and definition of Competent Person as contained in EM 385-1-1.

1.6.1.3 Crane Operators

Meet the crane operators requirements in USACE EM 385-1-1, Section 16 and Appendix I. In addition, for mobile cranes with Original Equipment Manufacturer (OEM) rated capacitates of 50,000 pounds or greater, designate crane operators as qualified by a source that qualifies crane operators (i.e., union, a government agency, or an organization that tests and qualifies crane operators). Provide proof of current qualification. In addition, the Contractor shall comply with Contractor Operated Crane Requirements included in the latest revision of document NAVFAC P-307 Section 1.7.2 "Contractor Operated Cranes," and Appendix P, Figure P-1 and with 29 CFR 1926, Subpart CC.

1.6.2 Personnel Duties

1.6.2.1 Site Safety and Health Officer (SSHO)

The SSHO shall:

a. Conduct daily safety and health inspections and maintain a written log which includes area/operation inspected, date of inspection, identified hazards, recommended corrective actions, estimated and actual dates of corrections. Attach safety inspection logs to the Contractors' daily production and/or quality control report.

b. Conduct mishap investigations and complete required reports. Maintain the OSHA Form 300 and Daily Production reports for prime and sub-contractors.

c. Maintain applicable safety reference material on the job site.

d. Attend the pre-construction conference, pre-work meetings including

preparatory inspection meeting, and periodic in-progress meetings.

e. Implement and enforce accepted APPS and AHAs.

f. Maintain a safety and health deficiency tracking system that monitors outstanding deficiencies until resolution. Post a list of unresolved safety and health deficiencies on the safety bulletin board.

g. Ensure sub-contractor compliance with safety and health requirements.

h. Maintain a list of hazardous chemicals on site and their material safety data sheets.

Failure to perform the above duties will result in dismissal of the superintendent, QC Manager, and/or SSHO, and a project work stoppage. The project work stoppage will remain in effect pending approval of a suitable replacement.

1.6.3 Meetings

1.6.3.1 Preconstruction Conference

a. Contractor representatives who have a responsibility or significant role in accident prevention on the project shall attend the preconstruction conference. This includes the project superintendent, site safety and health officer, quality control supervisor, or any other assigned safety and health professionals who participated in the development of the APP (including the Activity Hazard Analyses (AHAs) and special plans, program and procedures associated with it).

b. Discuss the details of the submitted APP to include incorporated plans, programs, procedures and a listing of anticipated AHAs that will be developed and implemented during the performance of the contract. This list of proposed AHAs will be reviewed at the conference and an agreement will be reached between the Contractor and the Contracting Officer's representative as to which phases will require an analysis. In addition, establish a schedule for the preparation, submittal, review, and acceptance of AHAs to preclude project delays.

c. Deficiencies in the submitted APP will be brought to the attention of the Contractor at the preconstruction conference, and the Contractor shall revise the plan to correct deficiencies and re-submit it for acceptance. Do not begin work until there is an accepted APP.

1.6.3.2 Safety Meetings

Conduct and document meetings as required by EM 385-1-1. Attach minutes showing contract title, signatures of attendees and a list of topics discussed to the Contractors' daily production and/or quality control report.

1.7 ACCIDENT PREVENTION PLAN (APP)

Use a qualified person to prepare the written site-specific APP. Prepare the APP in accordance with the format and requirements of USACE EM 385-1-1 and as supplemented herein. Cover all paragraph and subparagraph elements in USACE EM 385-1-1, Appendix A, "Minimum Basic Outline for Accident Prevention Plan". Specific requirements for some of the APP elements are described below. The APP shall be job-specific and address any unusual or

unique aspects of the project or activity for which it is written. The APP shall interface with the Contractor's overall safety and health program. Include any portions of the Contractor's overall safety and health program referenced in the APP in the applicable APP element and made site-specific. The Government considers the Prime Contractor to be the "controlling authority" for all work site safety and health of the subcontractors. Contractors are responsible for informing their subcontractors of the safety provisions under the terms of the contract and the penalties for noncompliance, coordinating the work to prevent one craft from interfering with or creating hazardous working conditions for other crafts, and inspecting subcontractor operations to ensure that accident prevention responsibilities are being carried out. The APP shall be signed by the person and firm (senior person) preparing the APP, the Contractor, the on-site superintendent, the designated site safety and health officer, the Contractor Quality control Manager, and any designated CSP or CIH.

Submit the APP to the Contracting Officer 15 calendar days prior to the date of the preconstruction conference for acceptance. Work cannot proceed without an accepted APP.

Once accepted by the Contracting Officer, the APP and attachments will be enforced as part of the contract. Disregarding the provisions of this contract or the accepted APP will be cause for stopping of work, at the discretion of the Contracting Officer, until the matter has been rectified.

Once work begins, changes to the accepted APP shall be made with the knowledge and concurrence of the Contracting Officer, project superintendent, SSHO and quality control manager. Should any severe hazard exposure, i.e. imminent danger, become evident, stop work in the area, secure the area, and develop a plan to remove the exposure and control the hazard. Notify the Contracting Officer within 24 hours of discovery. Eliminate/remove the hazard. In the interim, take all necessary action to restore and maintain safe working conditions in order to safeguard onsite personnel, visitors, the public (as defined by ASSE/SAFE A10.34,) and the environment.

Copies of the accepted plan will be maintained at the Contracting Officer's office and at the job site. Continuously review and amend the APP, as necessary, throughout the life of the contract. Incorporate unusual or high-hazard activities not identified in the original APP as they are discovered.

1.7.1 EM 385-1-1 Contents

In addition to the requirements outlined in Appendix A of USACE EM 385-1-1, the following is required:

a. Names and qualifications (resumes including education, training, experience and certifications) of all site safety and health personnel designated to perform work on this project to include the designated site safety and health officer and other competent and qualified personnel to be used such as CSPs, CIHs, STSs, CHSTs. Specify the duties of each position.

b. Qualifications of competent and of qualified persons. As a minimum, designate and submit qualifications of competent persons for each of the following major areas: excavation; scaffolding; fall protection; hazardous energy; confined space; health hazard recognition, evaluation and control of chemical, physical and biological agents; personal

protective equipment and clothing to include selection, use and maintenance.

c. Confined Space Entry Plan. Develop a confined and/or enclosed space entry plan in accordance with USACE EM 385-1-1, applicable OSHA standards 29 CFR 1910, 29 CFR 1915, and 29 CFR 1926, OSHA Directive CPL 2.100, and any other federal, state and local regulatory requirements identified in this contract. Identify the qualified person's name and qualifications, training, and experience. Delineate the qualified person's authority to direct work stoppage in the event of hazardous conditions. Include procedure for rescue by contractor personnel and the coordination with emergency responders. (If there is no confined space work, include a statement that no confined space work exists and none will be created.)

d. Crane Critical Lift Plan. Prepare and sign weight handling critical lift plans for lifts over 75 percent of the capacity of the crane or hoist (or lifts over 50 percent of the capacity of a barge mounted mobile crane's hoists) at any radius of lift; lifts involving more than one crane or hoist; lifts of personnel; and lifts involving non-routine rigging or operation, sensitive equipment, or unusual safety risks. Submit 15 calendar days prior to on-site work and include the requirements of USACE EM 385-1-1, paragraph 16.H. and the following:

1. For lifts of personnel, demonstrate compliance with the requirements of 29 CFR 1926.1400.

2. For barge mounted mobile cranes, barge stability calculations identifying barge list and trim based on anticipated loading; and load charts based on calculated list and trim. The amount of list and trim shall be within the crane manufacturer's requirements. Comply with requirements of NAVFAC P-307 "Management of Weight Handling Equipment"

e. Fall Protection and Prevention (FP&P) Program Documentation. The program documentation shall be site specific and address all fall hazards in the work place and during different phases of construction. Address how to protect and prevent workers from falling to lower levels when they are exposed to fall hazards above 6 feet. A qualified person for fall protection shall prepare and sign the program documentation. Include fall protection and prevention systems, equipment and methods employed for every phase of work, responsibilities, assisted rescue, self-rescue and evacuation procedures, training requirements, and monitoring methods. Revise the Fall Protection and Prevention Program documentation every six months for lengthy projects, reflecting any changes during the course of construction due to changes in personnel, equipment, systems or work habits. Keep and maintain the accepted Fall Protection and Prevention Program documentation at the job site for the duration of the project. Include the Fall Protection and Prevention Program documentation in the Accident Prevention Plan (APP).

The FP&P Plan shall include a Rescue and Evacuation Plan in accordance with USACE EM 385-1-1, Section 21.M. The plan shall include a detailed discussion of the following: methods of rescue; methods of self-rescue; equipment used; training requirement; specialized training for the rescuers; procedures for requesting rescue and medical assistance; and transportation routes to a medical facility. Include the Rescue and Evacuation Plan in the Fall Protection and Prevention (FP&P) Plan, and as part of the Accident Prevention Plan (APP).

f. When working over water, the following minimum additional protection measures shall also be provided:

1. When the work area is less than 10 feet above the surface of the water provide Coast Guard-approved life jackets or buoyant vests in compliance with CGS Standard 65.11-M88 Personal Flotation Devices or shall wear and be attached to proper fall protection equipment or anchorage.

2. Ensure that workers who are designated to perform specific rescue tasks, properly informed as to the proper rescue procedures, and trained in the use of the rescue equipment in order to perform rescue operations in a safe manner, are available in such numbers as are needed in the circumstances to perform rescue operations safely.

3. Provide rescue equipment that includes an adequate boat to ensure a safe and timely rescue, ring buoys with at least 90 feet of line which are readily available for emergency rescue and a minimum working strength of 5,000 pounds made from polypropylene or other material that will provide an equivalent level of protection, a boat hook, an audible alarm system to notify of an accident and to initiate the rescue procedure.

4. Where work is being performed above water that has a fast current and where it is practicable, provide a floatation across the water that has a minimum working strength of 5,000 pounds or is made of polypropylene or other material that will provide an equivalent level of protection; and has a buoy or some other flotation device attached.

g. Occupant Protection Plan. The safety and health aspects of lead-based paint removal, prepared in accordance with Section 02 82 33.13 20 REMOVAL/CONTROL AND DISPOSAL OF PAINT WITH LEAD.

h. Site Safety and Health Plan. The safety and health aspects prepared in accordance with Section 02 61 13 EXCAVATION AND HANDLING OF CONTAMINATED MATERIAL.

i. PCB Plan. The safety and health aspects of Polychlorinated Biphenyls work, prepared in accordance with Section 02 84 16 HANDLING OF LIGHTING BALLASTS AND LAMPS CONTAINING PCB'S AND MERCURY.

j. Site Demolition Plan. The safety and health aspects prepared in accordance with Section 02 41 00 DEMOLITION and referenced sources.

1.8 ACTIVITY HAZARD ANALYSIS (AHA)

The Activity Hazard Analysis (AHA) format shall be in accordance with USACE EM 385-1-1, Section 1. Submit the AHA for review at least 15 calendar days prior to the start of each phase. Format subsequent AHAs as amendments to the APP. The analysis should be used during daily inspections to ensure the implementation and effectiveness of the activity's safety and health controls.

The AHA list will be reviewed periodically (at least monthly) at the Contractor supervisory safety meeting and updated as necessary when procedures, scheduling, or hazards change.

Develop the activity hazard analyses using the project schedule as the basis for the activities performed. Any activities listed on the project schedule will require an AHA. The AHAs will be developed by the contractor, supplier or subcontractor and provided to the prime contractor for submittal to the Contracting Officer.

1.9 DISPLAY OF SAFETY INFORMATION

Within one calendar day after commencement of work, erect a safety bulletin board at the job site. Where size, duration, or logistics of project do not facilitate a bulletin board, an alternative method, acceptable to the Contracting Officer, that is accessible and includes all mandatory information for employee and visitor review, shall be deemed as meeting the requirement for a bulletin board. Include and maintain information on safety bulletin board as required by EM 385-1-1, section 01.A.06. Additional items required to be posted include:

a. Confined space entry permit.

b. Hot work permit.

1.10 SITE SAFETY REFERENCE MATERIALS

Maintain safety-related references applicable to the project, including those listed in the article "References." Maintain applicable equipment manufacturer's manuals.

1.11 EMERGENCY MEDICAL TREATMENT

Contractors will arrange for their own emergency medical treatment. Government has no responsibility to provide emergency medical treatment.

1.12 NOTIFICATIONS and REPORTS

1.12.1 Accident Notification

Notify the Contracting Officer as soon as practical, but no more than four hours after any accident meeting the definition of Recordable Injuries or Illnesses or High Visibility Accidents, property damage equal to or greater than $2,000, or any weight handling equipment accident. Within notification include contractor name; contract title; type of contract; name of activity, installation or location where accident occurred; date and time of accident; names of personnel injured; extent of property damage, if any; extent of injury, if known, and brief description of accident (to include type of construction equipment used, PPE used, etc.). Preserve the conditions and evidence on the accident site until the Government investigation team arrives on-site and Government investigation is conducted.

1.12.2 Accident Reports

a. Conduct an accident investigation for recordable injuries and illnesses, for Medical Treatment defined in paragraph DEFINITIONS, property damage accidents resulting in at least $20,000 in damages, and near misses as defined in EM 385-1-1, to establish the root cause(s) of the accident. Complete the applicable NAVFAC Contractor Incident Reporting System (CIRS), and electronically submit via the NAVFAC Enterprise Safety Applications Management System (ESAMS). The

Contracting Officer will provide copies of any required or special forms.

b. Near Misses: Complete the applicable documentation in NAVFAC Contractor Incident Reporting System (CIRS), and electronically submit via the NAVFAC Enterprise Safety Applications Management System (ESAMS).

c. Conduct an accident investigation for any weight handling equipment accident (including rigging gear accidents) to establish the root cause(s) of the accident, complete the WHE Accident Report (Crane and Rigging Gear) form and provide the report to the Contracting Officer within 30 calendar days of the accident. Do not proceed with crane operations until cause is determined and corrective actions have been implemented to the satisfaction of the contracting officer. The Contracting Officer will provide a blank copy of the accident report form.

1.12.3 Crane Reports

Submit crane inspection reports required in accordance with USACE EM 385-1-1, Appendix I and as specified herein with Daily Reports of Inspections.

1.12.4 Certificate of Compliance

Provide a Certificate of Compliance for each crane entering an activity under this contract (see Contracting Officer for a blank certificate). State within the certificate that the crane and rigging gear meet applicable OSHA regulations (with the Contractor citing which OSHA regulations are applicable, e.g., cranes used in construction, demolition, or maintenance comply with 29 CFR 1926 and USACE EM 385-1-1 Section 16 and Appendix I. Certify on the Certificate of Compliance that the crane operator(s) is qualified and trained in the operation of the crane to be used. Also certify that all of its crane operators working on the DOD activity have been trained in the proper use of all safety devices (e.g., anti-two block devices). Post certifications on the crane.

1.12.5 Third Party Certification of Barge-Mounted Mobile Cranes

Certify barge-mounted mobile cranes in accordance with 29 CFR 1919 by an OSHA accredited person.

1.13 HOT WORK

Submit and obtain a written permit prior to performing "Hot Work" (welding, cutting, etc.) or operating other flame-producing/spark producing devices, from the Fire Division. A permit is required from the Explosives Safety Office for work in and around where explosives are processed, stored, or handled. CONTRACTORS ARE REQUIRED TO MEET ALL CRITERIA BEFORE A PERMIT IS ISSUED. Provide at least two (2) twenty (20) pound 4A:20 BC rated extinguishers for normal "Hot Work". All extinguishers shall be current inspection tagged, approved safety pin and tamper resistant seal. It is also mandatory to have a designated FIRE WATCH for any "Hot Work" done at this activity. The Fire Watch shall be trained in accordance with NFPA 51B and remain on-site for a minimum of 30 minutes after completion of the task or as specified on the hot work permit.

When starting work in the facility, require personnel to familiarize themselves with the location of the nearest fire alarm boxes and place in memory the emergency Fire Division phone number. ANY FIRE, NO MATTER HOW

SMALL, SHALL BE REPORTED TO THE RESPONSIBLE FIRE DIVISION IMMEDIATELY.

1.14 FACILITY OCCUPANCY CLOSURE

Streets, walks, and other facilities occupied and used by the Government shall not be closed or obstructed without written permission from the Contracting Officer.

1.15 SEVERE STORM PLAN

In the event of a severe storm warning, the Contractor must:

a. Secure outside equipment and materials and place materials that could be damaged in protected areas.

b. Check surrounding area, including roof, for loose material, equipment, debris, and other objects that could be blown away or against existing facilities.

c. Ensure that temporary erosion controls are adequate.

1.16 CONFINED SPACE ENTRY REQUIREMENTS.

Contractors entering and working in confined spaces while performing general industry work are required to follow the requirements of OSHA 29 CFR 1926 and comply with the requirements in Section 34 of EM 385-1-1, OSHA 29 CFR 1910, and OSHA 29 CFR 1910.146. Contractors entering and working in confined spaces while performing shipyard industry work are required to follow the requirements of OSHA 29 CFR 1915 Subpart B.

PART 2 PRODUCTS

2.1 CONFINED SPACE SIGNAGE

Provide permanent signs integral to or securely attached to access covers for new permit-required confined spaces. Signs wording: "DANGER--PERMIT-REQUIRED CONFINED SPACE - DO NOT ENTER -" in bold letters a minimum of one inch in height and constructed to be clearly legible with all paint removed. The signal word "DANGER" shall be red and readable from 5 feet.

PART 3 EXECUTION

3.1 CONSTRUCTION AND OTHER WORK

Comply with USACE EM 385-1-1, NFPA 70, NFPA 70E, NFPA 241, the APP, the AHA, Federal and State OSHA regulations, and other related submittals and activity fire and safety regulations. The most stringent standard prevails.

PPE is governed in all areas by the nature of the work the employee is performing. Use personal hearing protection at all times in designated noise hazardous areas or when performing noise hazardous tasks. Safety glasses must be carried/available on each person.

Mandatory PPE includes:

a. Hard Hat

b. Appropriate Safety Shoes

c. Reflective Vests

3.1.1 Hazardous Material Use

Each hazardous material must receive approval from the Contracting Office or their designated representative prior to being brought onto the job site or prior to any other use in connection with this contract. Allow a minimum of 10 working days for processing of the request for use of a hazardous material.

3.1.2 Hazardous Material Exclusions

Notwithstanding any other hazardous material used in this contract, radioactive materials or instruments capable of producing ionizing/non-ionizing radiation (with the exception of radioactive material and devices used in accordance with USACE EM 385-1-1 such as nuclear density meters for compaction testing and laboratory equipment with radioactive sources) as well as materials which contain asbestos, mercury or polychlorinated biphenyls, di-isocynates, lead-based paint are prohibited. The Contracting Officer, upon written request by the Contractor, may consider exceptions to the use of any of the above excluded materials. Low mercury lamps used within fluorescent lighting fixtures are allowed as an exception without further Contracting Officer approval. Notify the Radiation Safety Officer (RSO) prior to excepted items of radioactive material and devices being brought on base.

3.1.3 Unforeseen Hazardous Material

The design should have identified materials such as PCB, lead paint, and friable and non-friable asbestos and other OSHA regulated chemicals (i.e. 29 CFR Part 1910.1000). If additional material, not indicated, that may be hazardous to human health upon disturbance during construction operations is encountered, stop that portion of work and notify the Contracting Officer immediately. Within 14 calendar days the Government will determine if the material is hazardous. If material is not hazardous or poses no danger, the Government will direct the Contractor to proceed without change. If material is hazardous and handling of the material is necessary to accomplish the work, the Government will issue a modification pursuant to "FAR 52.243-4, Changes" and "FAR 52.236-2, Differing Site Conditions."

3.2 PRE-OUTAGE COORDINATION MEETING

Apply for utility outages at least 15 days in advance. As a minimum, the request should include the location of the outage, utilities being affected, duration of outage and any necessary sketches. Special requirements for electrical outage requests are contained elsewhere in this specification section. Once approved, and prior to beginning work on the utility system requiring shut down, attend a pre-outage coordination meeting with the Contracting Officer to review the scope of work and the lock-out/tag-out procedures for worker protection. No work will be performed on energized electrical circuits unless proof is provided that no other means exist.

3.3 CONTROL OF HAZARDOUS ENERGY (LOCKOUT/TAGOUT)

Ensure that each employee is familiar with and complies with these procedures and USACE EM 385-1-1, Section 12, Control of Hazardous Energy.

3.4 SAFETY LOCKOUT/TAGOUT PROCEDURES

Contractor shall ensure that each employee is familiar with and complies with these procedures and 29 CFR 1910.147. Contracting Officer will, at the Contractor's request, apply lockout/tagout tags and take other actions that, because of experience and knowledge, are known to be necessary to make the particular equipment safe to work on. No person, regardless of position or authority, shall operate any switch, valve, or equipment that has an official lockout/tagout tag attached to it, nor shall such tag be removed except as provided in this section. No person shall work on any equipment that requires a lockout/tagout tag unless he, his immediate supervisor, project leader, or a subordinate has in his possession the stubs of the required lockout/tagout tags. When work is to be performed on electrical circuits, only qualified personnel shall perform work on electrical circuits. A supervisor who is required to enter an area protected by a lockout/tagout tag will be considered a member of the protected group provided he notifies the holder of the tag stub each time he enters and departs from the protected area. Identification markings on building light and power distribution circuits shall not be relied on for established safe work conditions. Before clearance will be given on any equipment other than electrical (generally referred to as mechanical apparatus), the apparatus, valves, or systems shall be secured in a passive condition with the appropriate vents, pins, and locks. Pressurized or vacuum systems shall be vented to relieve differential pressure completely. Vent valves shall be tagged open during the course of the work. Where dangerous gas or fluid systems are involved, or in areas where the environment may be oxygen deficient, system or areas shall be purged, ventilated, or otherwise made safe prior to entry.

3.4.1 Tag Placement

Lockout/tagout tags shall be completed in accordance with the regulations printed on the back thereof and attached to any device which, if operated, could cause an unsafe condition to exist. If more than one group is to work on any circuit or equipment, the employee in charge of each group shall have a separate set of lockout/tagout tags completed and properly attached. When it is required that certain equipment be tagged, the Government will review the characteristics of the various systems involved that affect the safety of the operations and the work to be done; take the necessary actions, including voltage and pressure checks, grounding, and venting, to make the system and equipment safe to work on; and apply such lockout/tagout tags to those switches, valves, vents, or other mechanical devices needed to preserve the safety provided. This operation is referred to as "Providing Safety Clearance."

3.4.2 Tag Removal

When any individual or group has completed its part of the work and is clear of the circuits or equipment, the supervisor, project leader, or individual for whom the equipment was tagged shall turn in his or her signed lockout/tagout tag stub to the Contracting Officer. That group's or individual's lockout/tagout tags on equipment may then be removed on authorization by the Contracting Officer.

3.5 FALL HAZARD PROTECTION AND PREVENTION PROGRAM

Establish a fall protection and prevention program, for the protection of all employees exposed to fall hazards. Within the program include company policy, identify responsibilities, education and training requirements,

fall hazard identification, prevention and control measures, inspection, storage, care and maintenance of fall protection equipment and rescue and evacuation procedures in accordance with ASSE/SAFE Z359.1.

3.5.1 Training

Institute a fall protection training program. As part of the Fall Hazard Protection and Prevention Program, provide training for each employee who might be exposed to fall hazards. Provide training by a competent person for fall protection in accordance with USACE EM 385-1-1, Section 21.B.

3.5.2 Fall Protection Equipment and Systems

Enforce use of the fall protection equipment and systems designated for each specific work activity in the Fall Protection and Prevention Plan and/or AHA at all times when an employee is exposed to a fall hazard. Protect employees from fall hazards as specified in EM 385-1-1, Section 21. In addition to the required fall protection systems, safety skiff, personal floatation devices, life rings etc., are required when working above or next to water in accordance with USACE EM 385-1-1, Paragraphs 21.N through 21.N.04. Personal fall arrest systems are required when working from an articulating or extendible boom, swing stages, or suspended platform. In addition, personal fall arrest systems are required when operating other equipment such as scissor lifts if the work platform is capable of being positioned outside the wheelbase. The need for tying-off in such equipment is to prevent ejection of the employee from the equipment during raising, lowering, or travel. Fall protection must comply with 29 CFR 1926.500, Subpart M, USACE EM 385-1-1 and ASSE/SAFE A10.32.

3.5.2.1 Personal Fall Arrest Equipment

Personal fall arrest equipment, systems, subsystems, and components shall meet ASSE/SAFE Z359.1. Only a full-body harness with a shock-absorbing lanyard or self-retracting lanyard is an acceptable personal fall arrest body support device. Body belts may only be used as a positioning device system (for uses such as steel reinforcing assembly and in addition to an approved fall arrest system). Harnesses shall have a fall arrest attachment affixed to the body support (usually a Dorsal D-ring) and specifically designated for attachment to the rest of the system. Only locking snap hooks and carabiners shall be used. Webbing, straps, and ropes shall be made of synthetic fiber. The maximum free fall distance when using fall arrest equipment shall not exceed 6 feet. The total fall distance and any swinging of the worker (pendulum-like motion) that can occur during a fall shall always be taken into consideration when attaching a person to a fall arrest system.

3.5.3 Fall Protection for Roofing Work

Implement fall protection controls based on the type of roof being constructed and work being performed. Evaluate the roof area to be accessed for its structural integrity including weight-bearing capabilities for the projected loading.

a. Low Sloped Roofs:

(1) For work within 6 feet of an edge, on low-slope roofs, protect personnel from falling by use of personal fall arrest systems, guardrails, or safety nets. A safety monitoring system is not adequate fall protection and is not authorized.

(2) For work greater than 6 feet from an edge, erect and install warning lines in accordance with 29 CFR 1926.500 and USACE EM 385-1-1.

b. Steep-Sloped Roofs: Work on steep-sloped roofs requires a personal fall arrest system, guardrails with toe-boards, or safety nets. This requirement also includes residential or housing type construction.

3.5.4 Horizontal Lifelines

Design, install, certify and use under the supervision of a qualified person horizontal lifelines for fall protection as part of a complete fall arrest system which maintains a safety factor of 2 (29 CFR 1926.500).

3.5.5 Guardrails and Safety Nets

Design, install and use guardrails and safety nets in accordance with EM 385-1-1 and 29 CFR 1926 Subpart M.

3.5.6 Rescue and Evacuation Procedures

When personal fall arrest systems are used, ensure that the mishap victim can self-rescue or can be rescued promptly should a fall occur. Prepare a Rescue and Evacuation Plan and include a detailed discussion of the following: methods of rescue; methods of self-rescue; equipment used; training requirement; specialized training for the rescuers; procedures for requesting rescue and medical assistance; and transportation routes to a medical facility. Include the Rescue and Evacuation Plan within the Activity Hazard Analysis (AHA) for the phase of work, in the Fall Protection and Prevention (FP&P) Plan, and the Accident Prevention Plan (APP).

3.6 SCAFFOLDING

Provide employees with a safe means of access to the work area on the scaffold. Climbing of any scaffold braces or supports not specifically designed for access is prohibited. Access scaffold platforms greater than 20 feet maximum in height by use of a scaffold stair system. Do not use vertical ladders commonly provided by scaffold system manufacturers for accessing scaffold platforms greater than 20 feet maximum in height. The use of an adequate gate is required. Ensure that employees are qualified to perform scaffold erection and dismantling. Do not use scaffold without the capability of supporting at least four times the maximum intended load or without appropriate fall protection as delineated in the accepted fall protection and prevention plan. Stationary scaffolds must be attached to structural building components to safeguard against tipping forward or backward. Give special care to ensure scaffold systems are not overloaded. Side brackets used to extend scaffold platforms on self-supported scaffold systems for the storage of material is prohibited. The first tie-in shall be at the height equal to 4 times the width of the smallest dimension of the scaffold base. Place work platforms on mud sills. Scaffold or work platform erectors shall have fall protection during the erection and dismantling of scaffolding or work platforms that are more than six feet. Delineate fall protection requirements when working above six feet or above dangerous operations in the Fall Protection and Prevention (FP&P) Plan and Activity Hazard Analysis (AHA) for the phase of work.

3.6.1 Stilts

The use of stilts for gaining additional height in construction, renovation, repair or maintenance is prohibited.

3.7 EQUIPMENT

3.7.1 Material Handling Equipment

a. Material handling equipment such as forklifts shall not be modified with work platform attachments for supporting employees unless specifically delineated in the manufacturer's printed operating instructions.

b. The use of hooks on equipment for lifting of material must be in accordance with manufacturer's printed instructions. Additionally, when material handling equipment is used as a crane it must meet NAVFAC P-307 requirements in Sections 1.7.2, "Contractor Operated Cranes," and 12, "Investigation and Reporting of Crane and Rigging Gear Accidents."

c. Operators of forklifts or power industrial trucks shall be licensed in accordance with OSHA.

3.7.2 Weight Handling Equipment

a. Equip cranes and derricks as specified in EM 385-1-1, section 16.

b. Notify the Contracting Officer 15 days in advance of any cranes entering the activity so that necessary quality assurance spot checks can be coordinated. Prior to cranes entering federal activities, a Crane Access Permit must be obtained from the Contracting Officer. A copy of the permitting process will be provided at the Preconstruction Conference. Contractor's operator shall remain with the crane during the spot check.

c. Comply with the crane manufacturer's specifications and limitations for erection and operation of cranes and hoists used in support of the work. Perform erection under the supervision of a designated person (as defined in ASME B30.5). Perform all testing in accordance with the manufacturer's recommended procedures.

d. Comply with ASME B30.5 for mobile and locomotive cranes, ASME B30.22 for articulating boom cranes, ASME B30.3 for construction tower cranes, and ASME B30.8 for floating cranes and floating derricks.

e. Under no circumstance shall a Contractor make a lift at or above 90 percent of the cranes rated capacity in any configuration.

f. When operating in the vicinity of overhead transmission lines, operators and riggers shall be alert to this special hazard and follow the requirements of USACE EM 385-1-1 Section 11, NAVFAC P-307 Figure 10-3 and ASME B30.5 or ASME B30.22 as applicable.

g. Do not crane suspended personnel work platforms (baskets) unless the Contractor proves that using any other access to the work location would provide a greater hazard to the workers or is impossible. Do not lift personnel with a line hoist or friction crane.

h. Inspect, maintain, and recharge portable fire extinguishers as specified in NFPA 10, Standard for Portable Fire Extinguishers.

i. All employees must keep clear of loads about to be lifted and of suspended loads.

j. Use cribbing when performing lifts on outriggers.

k. The crane hook/block must be positioned directly over the load. Side loading of the crane is prohibited.

l. A physical barricade must be positioned to prevent personnel from entering the counterweight swing (tail swing) area of the crane.

m. Certification records which include the date of inspection, signature of the person performing the inspection, and the serial number or other identifier of the crane that was inspected shall always be available for review by Contracting Officer personnel.

n. Written reports listing the load test procedures used along with any repairs or alterations performed on the crane shall be available for review by Contracting Officer personnel.

o. Certify that all crane operators have been trained in proper use of all safety devices (e.g. anti-two block devices).

p. Take steps to ensure that wind speed does not contribute to loss of control of the load during lifting operations. Prior to conducting lifting operations set a maximum wind speed at which a crane can be safely operated based on the equipment being used, the load being lifted, experience of operators and riggers, and hazards on the work site. This maximum wind speed determination shall be included as part of the activity hazard analysis plan for that operation.

3.7.3 Equipment and Mechanized Equipment

a. Proof of qualifications for operator shall be kept on the project site for review.

b. Manufacture specifications or owner's manual for the equipment shall be on-site and reviewed for additional safety precautions or requirements that are sometimes not identified by OSHA or USACE EM 385-1-1. Incorporate such additional safety precautions or requirements into the AHAs.

3.8 EXCAVATIONS

Soil classification must be performed by a competent person in accordance with 29 CFR 1926 and EM 385-1-1.

3.8.1 Utility Locations

All underground utilities in the work area must be positively identified by a third party, independent, private utility locating company in addition to any station locating service and coordinated with the station utility department.

3.8.2 Utility Location Verification

Physically verify underground utility locations, including utility depth, by hand digging using wood or fiberglass handled tools when any adjacent construction work is expected to come within three feet of the underground system. Digging within 2 feet of a known utility must not be performed by means of mechanical equipment; hand digging shall be used if construction is parallel to an existing utility. Expose the utility by hand digging every 100 feet if parallel within 5 feet of the excavation.

3.8.3 Utilities Within and Under Concrete, Bituminous Asphalt, and Other Impervious Surfaces

Utilities located within and under concrete slabs or pier structures, bridges, parking areas, and the like, are extremely difficult to identify. Whenever contract work involves chipping, saw cutting, or core drilling through concrete, bituminous asphalt or other impervious surfaces, the existing utility location must be coordinated with station utility departments in addition to location and depth verification by a third party, independent, private locating company. The third party, independent, private locating company shall locate utility depth by use of Ground Penetrating Radar (GPR), X-ray, bore scope, or ultrasound prior to the start of demolition and construction. Outages to isolate utility systems must be used in circumstances where utilities are unable to be positively identified. The use of historical drawings does not alleviate the contractor from meeting this requirement.

3.8.4 Shoring Systems

Trench and shoring systems must be identified in the accepted safety plan and AHA. Manufacture tabulated data and specification or registered engineer tabulated data for shoring or benching systems shall be readily available on-site for review. Job-made shoring or shielding must have the registered professional engineer stamp, specifications, and tabulated data. Extreme care must be used when excavating near direct burial electric underground cables.

3.8.5 Trenching Machinery

Operate trenching machines with digging chain drives only when the spotters/laborers are in plain view of operator. Provide operator and spotters/laborers training on the hazards of digging with chain drives with emphasis on the distance that needs to be maintained when the digging chain is operating. Keep documentation of the training on file at the project site.

3.9 ELECTRICAL

3.9.1 Conduct of Electrical Work

Underground electrical spaces must be certified safe for entry before entering to conduct work. Cables that will be cut must be positively identified and de-energized prior to performing each cut. Positive cable identification must be made prior to submitting any outage request for electrical systems. Arrangements are to be coordinated with the Contracting Officer and Station Utilities for identification. The Contracting Officer will not accept an outage request until the Contractor satisfactorily documents that the circuits have been clearly identified. Perform all high voltage cable cutting remotely using hydraulic cutting

tool. When racking in or live switching of circuit breakers, no additional person other than the switch operator will be allowed in the space during the actual operation. Plan so that work near energized parts is minimized to the fullest extent possible. Use of electrical outages clear of any energized electrical sources is the preferred method. When working in energized substations, only qualified electrical workers will be permitted to enter. When work requires Contractor to work near energized circuits as defined by the NFPA 70, high voltage personnel must use personal protective equipment that includes, as a minimum, electrical hard hat, safety shoes, insulating gloves with leather protective sleeves, fire retarding shirts, coveralls, face shields, and safety glasses. In addition, provide electrical arc flash protection for personnel as required by NFPA 70E. Insulating blankets, hearing protection, and switching suits may also be required, depending on the specific job and as delineated in the Contractor's AHA.

3.9.2 Portable Extension Cords

Size portable extension cords in accordance with manufacturer ratings for the tool to be powered and protected from damage. Immediately removed from service all damaged extension cords. Portable extension cords shall meet the requirements of EM 385-1-1, NFPA 70E, and OSHA electrical standards.

3.10 WORK IN CONFINED SPACES

Comply with the requirements in Section 34 of USACE EM 385-1-1, OSHA 29 CFR 1910, OSHA 29 CFR 1910.146, OSHA Directive CPL 2.100 and OSHA 29 CFR 1926. Any potential for a hazard in the confined space requires a permit system to be used.

a. Entry Procedures. Prohibit entry into a confined space by personnel for any purpose, including hot work, until the qualified person has conducted appropriate tests to ensure the confined or enclosed space is safe for the work intended and that all potential hazards are controlled or eliminated and documented. (See Section 34 of USACE EM 385-1-1 for entry procedures.) All hazards pertaining to the space shall be reviewed with each employee during review of the AHA.

b. Forced air ventilation is required for all confined space entry operations and the minimum air exchange requirements must be maintained to ensure exposure to any hazardous atmosphere is kept below its' action level.

c. Sewer wet wells require continuous atmosphere monitoring with audible alarm for toxic gas detection.

-- End of Section --

SECTION 01 35 40.00 20

ENVIRONMENTAL MANAGEMENT
02/10

PART 1 GENERAL

1.1 REFERENCES

The publications listed below form a part of this specification to the extent referenced. The publications are referred to within the text by the basic designation only.

AMERICAN NATIONAL STANDARDS INSTITUTE (ANSI)

ANSI Z400.1/Z129.1	(2010) Hazardous Industrial Chemicals - Material Safety Data Sheets - Preparation

ASTM INTERNATIONAL (ASTM)

ASTM D4840	(1999; R 2010) Sampling Chain-Of-Custody Procedures
ASTM D5663	(1997; R 2011) Validating Recycled Content in Packaging Paper and Paperboard
ASTM E1991	(2005) Environmental Life Cycle Assessment of Building Materials/Products
ASTM E2114	(2008) Standard Terminology for Sustainability Relative to the Performance of Buildings

NATIONAL INSTITUTE OF STANDARDS AND TECHNOLOGY (NIST)

NIST BEES 4.0	(2007) Building for Environmental and Economic Sustainability

U.S. DEPARTMENT OF AGRICULTURE (USDA)

Biomass R&D Act	(2000) Biomass Research and Development Act
U.S. Farm Bill	(2002) U.S. Farm Bill of May 2002

U.S. NATIONAL ARCHIVES AND RECORDS ADMINISTRATION (NARA)

40 CFR	Protection of Environment
40 CFR 261	Identification and Listing of Hazardous Waste

1.2 DEFINITIONS

Definitions pertaining to sustainable development are as defined in ASTM E2114 and as specified.

a. "Biobased content" is calculated as the weight of the biobased material divided by the total weight of the product, and is expressed as a

percentage by weight.

b. "Biobased materials" include fuels, chemicals, building materials, or electric power or heat produced from biomass as defined by the Biomass R&D Act. Minimum biobased content shall be as defined in the U.S. Farm Bill.

c. "Chain-of-custody" is a process whereby a product or material is maintained under the physical possession or control during its entire life cycle.

d. "Pollution and environmental damage" is caused by the presence of chemical, physical, or biological elements or agents. Human health or welfare is adversely affected; ecological balances are unfavorably altered; the utility of the environment for aesthetic, cultural, or historical purposes degrades.

1.3 PRECONSTRUCTION MEETING

After award of Contract and prior to commencement of the work, the Contractor shall schedule and conduct a meeting with the Contracting Officer to discuss the proposed Environmental Protection Plan and to develop a mutual understanding relative to the details of environmental protection. The requirements for this meeting may be fulfilled during the coordination and mutual understanding meeting as specified in Section 01 45 00.00 10 01 45 00.00 20 01 45 00.00 40 QUALITY CONTROL.

1.4 SUBMITTALS

Government approval is required for submittals with a "G" designation; submittals not having a "G" designation are for Contractor Quality Control approval. When used, a designation following the "G" designation identifies the office that will review the submittal for the Government. The following shall be submitted in accordance with Section 01 33 00 SUBMITTAL PROCEDURES:

SD-01 Preconstruction Submittals

Environmental Protection Plan; G

Instructor Qualifications

Submit reference data to demonstrate instructors' individual and firm's capabilities and experience.

SD-06 Test Reports

Field Quality Control Reports

SD-07 Certificates

Environmental Regulatory Requirements

For Government's records, submit copies of permits, licenses, certifications, inspection reports, releases, jurisdictional settlements, notices, receipts for fee payments, judgments, correspondence, records, and similar documents, established for compliance with environmental regulations bearing on performance of the work.

SD-08 Manufacturer's Instructions

Material Safety Data Sheets

SD-11 Closeout Submittals

Training Program

Submit two copies of instructional program outline for demonstration and training, including a schedule of dates, times, length of instruction, instructors' names, learning objective, and teaching outline for each training module. At completion of training, submit one complete training manuals for Government's use, and a list of participants with each participant's results of performance-based test for each training module. For Government's records, submit Contractor 40 CFR employee training records upon request of the Contracting Officer.

Protection of Natural Resources

1.5 CONTRACTOR'S ENVIRONMENTAL MANAGER

Designate an on-site Environmental Manager responsible for overseeing the environmental goals for the project and implementing procedures for environmental protection.

1.5.1 Duties

The Environmental Manager shall be responsible for the following:

a. Compliance with applicable federal, state, and local environmental regulations, including maintaining required documentation.

b. Implementation of the Waste Management Plan.

c. Implementation of the Environmental Protection Plan.

d. Environmental training for Contractor personnel in accordance with their position requirements.

e. Monitoring and documentation of environmental procedures.

1.5.2 Qualifications

Minimum 5 years construction experience on projects of similar size and scope; minimum 2 years experience with environmental procedures similar to those of this project; familiarity with Environmental Management Systems (EMSs); familiarity with environmental regulations applicable to construction operations.

1.6 ENVIRONMENTAL REGULATORY REQUIREMENTS

The Contractor shall be responsible for knowing federal, state, and local regulatory requirements pertaining to legal disposal of all construction and demolition waste materials. Comply with all applicable regulations and maintain records of permits, licenses, certificates, and other environmental regulatory requirement correspondences.

1.7 ENVIRONMENTAL REQUIREMENTS FOR PRODUCTS

1.7.1 Material Safety Data Sheets (MSDS)

Submit an MSDS for each product specified in other sections or required by OSHA to have an MSDS. MSDS shall be prepared within the previous five years. Include information for MSDS Sections 1 through 16 in accordance with ANSI Z400.1/Z129.1 and as follows:

a. Section 11: Include data used to determine the hazards cited in Section 3. Identify acute data, carcinogenicity, reproductive effects, and target organ effects. Provide written description of the process used in evaluating chemical hazards relative to preparation of the MSDS.

b. Section 12: Include data regarding environmental impacts during raw materials acquisition, manufacture, and use. Include data regarding environmental impacts in the event of an accidental release.

c. Section 13: Include data regarding the proper disposal of the chemical. Include information regarding recycling and reuse. Indicate whether or not the product is considered to be "hazardous waste" according to 40 CFR 261.

d. Section 14: Identify hazard class for shipping.

e. Section 15: Identify federal, state, and local regulations applicable to the material.

f. Section 16: Include additional information relative to recycled content, biobased content, and other information regarding environmental and health impacts. Identify the date MSDS was prepared.

1.7.2 Life Cycle Assessments (LCAs)

For the following products, submit LCA data developed in accordance with ASTM E1991; and where BEES data exists, submit NIST BEES 4.0 analysis using 50 percent Environmental Performance Weighting and the EPA Scientific Advisory Board.

a. Masonry

b. Finish Carpentry

c. Plastic Fabrications

d. Building Insulation

e. Roofing

f. Joint Sealers

g. Wood & Plastic Doors

h. Windows

i. Skylights

j. Glazed Curtain Wall

k. Gypsum Board

l. Tile

m. Acoustical Ceilings

n. Resilient Flooring

o. Carpet

p. Toilet Compartments

q. Loading Dock Equipment

r. Office Equipment

s. Furnishings & Accessories

t. Renewable Energy Equipment

u. Elevators

v. HVAC equipment

x. Lighting equipment

1.8 ENVIRONMENTAL PROTECTION PLAN

Prepare and submit an Environmental Protection Plan not less than 10 days before the preconstruction meeting. At a minimum, address the following elements in accordance with this section:

a. Identification and contact information for Environmental Manager.

b. General site information, including preconstruction description and photographs.

c. Summary of training program.

d. Procedures to address water resources.

e. Procedures to address land resources.

f. Procedures to address air resources.

g. Procedures to address fish and wildlife resources.

h. Monitoring and quality control procedures.

Revise and resubmit Plan as required by the Contracting Officer. Approval of Contractor's Plan will not relieve the Contractor of responsibility for compliance with applicable environmental regulations.

1.9 ENVIRONMENTAL DEMONSTRATION AND TRAINING

Contractor shall provide environmental training for workers performing work on the project site.

1.9.1 Instructor Qualifications

Training shall be given by a firm or individual experienced in providing training or education similar in content and extent to that indicated for this project.

1.9.2 Coordination

Coordinate instruction schedule with Government operations. Adjust schedule as required to minimize disruption of Government operations. Coordinate instruction with demonstration and training of general building systems.

1.9.3 Training Program

Develop a training program for all site workers that includes the following topics:

a. Overview of environmental and sustainability issues related to the building industry.

b. Overview of environmental and sustainability issues related to the project.

c. Compliance with applicable federal, state, and local environmental regulations.

d. Review of site specific procedures and management plans implemented during construction, including the Waste Management Plan, Indoor Air Quality (IAQ) Management Plan, Environmental Protection Plan, and procedures for noise and acoustics management.

1.9.3.1 Scheduling

Provide instruction at mutually agreeable times.

1.9.3.2 Training Modules

Develop a learning objective and teaching outline for each topic in the Training Program. Include a description of specific skills and knowledge that each participant is expected to acquire. Instructors shall be well-versed in the particular topics that they are presenting.

1.9.3.3 Evaluation

At the conclusion of each training module, assess and document each participant's understanding of the module by use of a written performance-based test.

PART 2 PRODUCTS

2.1 ENVIRONMENTALLY PREFERABLE PRODUCTS

Consider raw materials acquisition, production, manufacturing, packaging, distribution, reuse, operation, maintenance, and disposal of products, and provide products and materials with the least effect on the environment, determined by LCA analysis, released toxins, and other methods.

2.1.1 Prohibited Materials

The use of the following materials is prohibited:

a. Products containing asbestos.

b. Products containing urea formaldehyde.

c. Products containing polychlorinated biphenyls.

d. Products containing chlorinated fluorocarbons.

e. Solder or flux containing more than 0.2 percent lead and domestic water pipe or pipe fittings containing more than 8 percent lead.

f. Paint containing more than 0.06 percent lead.

2.1.2 Packaging

Where Contractor has the option to provide one of the listed products or equal, preference shall be given to products with minimal packaging and easily recyclable packaging, and to manufacturers with policies that take back product packaging.

2.1.2.1 Industrial Paperboard

Minimum 45 percent post-consumer recycled content in accordance with ASTM D5663.

2.1.2.2 Carrier Board

Minimum 10 percent recycled content with a minimum of 10 percent post-consumer recycled content in accordance with ASTM D5663.

2.1.2.3 Brown Papers

Minimum 5 percent recycled content with a minimum of 5 percent post-consumer recycled content in accordance with ASTM D5663.

2.1.3 Substitutions

Notify the Contracting Officer when Contractor is aware of materials, equipment, or products that meet the aesthetic and programmatic intent of Contract Documents, but which are more environmentally responsible than materials, equipment, or products specified or indicated in the Contract Documents. Submit the following for initial review by the Contracting Officer:

a. Product data including manufacturer's name, address, and phone number.

b. Description of environmental advantages of proposed substitution over specified product.

PART 3 EXECUTION

3.1 PROTECTION OF NATURAL RESOURCES

Comply with applicable regulations and these specifications. Preserve the natural resources within the project boundaries and outside the limits of

permanent work performed under this Contract in their existing condition or restore to an equivalent or improved condition as approved by the Contracting Officer. Where violation of environmental procedures requirements will irreversibly damage the site, documentation of progress at weekly intervals shall be required.

3.1.1 General Disturbance

Confine demolition and construction activities to work area limits indicated on the Drawings. Remove debris, rubbish, and other waste materials resulting from demolition and construction operations from site. Transport materials with appropriate vehicles and dispose of them off site to areas that are approved for disposal by governing authorities having jurisdiction. Avoid spillage by covering and securing loads when hauling on or adjacent to public streets or highways. Remove spillage and sweep, wash, or otherwise clean project site, streets, or highways. Burning is prohibited.

3.1.2 Water Resources

Comply with requirements of the Virginia Pollutant Discharge Elimination System (VPDES). Prevent oily or other hazardous substances from entering the ground, drainage areas, or local bodies of water. Store and service construction equipment at areas designated for collection of oil wastes. Prevent ponding of stagnant water conducive to mosquito breeding habitat. Prevent run-off from site during demolition and construction operations.

3.1.3 Land Resources

Prior to construction, identify land resources to be preserved within the work area. Do not remove, cut, deface, injure, or destroy land resources including trees, shrubs, vines, grasses, topsoil, and landforms without permission from the Contracting Officer. Coordinate protection practices with work specified in Division 2 EXISTING CONDITIONS.

3.1.3.1 Erodible Soils

Plan and conduct earthwork to minimize the duration of exposure of unprotected soils, except where the constructed feature obscures borrow areas, quarries, and waste material areas. Clear areas in reasonably sized increments only as needed to use the areas developed. Form earthwork to final grade as shown. Immediately protect side slopes and back slopes upon completion of rough grading.

3.1.3.2 Erosion and Sedimentation Control Devices

Construct or install temporary and permanent erosion and sedimentation control features as required.

3.1.3.3 Tree and Plant Protection

Protect as specified in Division 2 EXISTING CONDITIONS and as specified. Prior to start of construction, tag each tree and plant scheduled to remain. In the event of damage to tree or plant, the Government may, at the Contracting Officer's discretion, deduct the indicated value of the damaged tree or plant from the Contract Sum.

3.1.4 Air Resources

Comply with Indoor Air Quality (IAQ) Management Plan and as follows:

a. Prevent creation of dust, air pollution, and odors.

b. Sequence construction to avoid unnecessary disturbance to site.

c. Use mulch, water sprinkling, temporary enclosures, and other appropriate methods as needed to limit dust and dirt rising and scattering in air. Do not use water when it may create hazardous or other adverse conditions such as flooding and pollution.

d. Store volatile liquids, including fuels and solvents, in closed containers. Do not store with materials that have a high capacity to adsorb VOC emissions or in occupied spaces.

e. Properly maintain equipment to reduce gaseous pollutant emissions.

3.1.5 Fish and Wildlife Resources

Manage and control construction activities to minimize interference with and damage to fish and wildlife. Do not disturb fish and wildlife. Do not alter water flows or otherwise significantly disturb the native habitat related to the project and critical to the survival of fish and wildlife, except as indicated or specified.

3.2 FIELD QUALITY CONTROL

Comply with requirements of agencies having jurisdiction and as specified herein. Provide field practices, shipping, and handling of samples in accordance with ASTM D4840. Provide Field Quality Control Reports in accordance with approved Environmental Protection Plan.

-- End of Section --

SECTION 01 42 00

SOURCES FOR REFERENCE PUBLICATIONS
08/10

PART 1 GENERAL

1.1 REFERENCES

Various publications are referenced in other sections of the specifications to establish requirements for the work. These references are identified in each section by document number, date and title. The document number used in the citation is the number assigned by the standards producing organization (e.g. ASTM B564 Standard Specification for Nickel Alloy Forgings). However, when the standards producing organization has not assigned a number to a document, an identifying number has been assigned for reference purposes.

1.2 ORDERING INFORMATION

The addresses of the standards publishing organizations whose documents are referenced in other sections of these specifications are listed below, and if the source of the publications is different from the address of the sponsoring organization, that information is also provided. Documents listed in the specifications with numbers which were not assigned by the standards producing organization should be ordered from the source by title rather than by number.

AMERICAN INDUSTRIAL HYGIENE ASSOCIATION (AIHA)
2700 Prosperity Ave., Suite 250
Fairfax, VA 22031
Tel: 703-849-8888
Fax: 703-207-3561
E-mail: infonet@aiha.org
Internet http://www.aiha.org

AMERICAN PETROLEUM INSTITUTE (API)
1220 L Street, NW
Washington, DC 20005-4070
Ph: 303-397-7993
Fax: 303-397-2740
E-mail: greg.kallio@ihs.com
Internet: http://www.api.org

AMERICAN SOCIETY OF SAFETY ENGINEERS (ASSE/SAFE)
1800 East Oakton Street
Des Plaines, IL 60018-2187
Ph: 847-699-2929
Fax: 847-768-3434
E-mail: customerservice@asse.org
Internet: http://www.asse.org

AMERICAN WATER WORKS ASSOCIATION (AWWA)
6666 West Quincy Avenue
Denver, CO 80235
Ph: 800-926-7337
Fax: 303-347-0804

E-mail: smorrison@awwa.org
Internet: http://www.awwa.org

ASME INTERNATIONAL (ASME)
Three Park Avenue, M/S 10E
New York, NY 10016-5990
Ph: 800-854-7179 or 800-843-2763
Fax: 212-591-7674
E-mail: infocentral@asme.org
Internet: http://www.asme.org

ASTM INTERNATIONAL (ASTM)
100 Barr Harbor Drive, P.O. Box C700
West Conshohocken, PA 19428-2959
Ph: 610-832-9585
Fax: 610-832-9555
E-mail: service@astm.org
Internet: http://www.astm.org

FOUNDATION FOR CROSS-CONNECTION CONTROL AND HYDRAULIC RESEARCH (FCCCHR)
University of South California
Kaprielian Hall 200
Los Angeles, CA 90089-2531
Ph: 213-740-2032 or 866-545-6340
Fax: 213-740-8399
E-mail: fccchr@usc.edu
Internet: http://www.usc.edu/dept/fccchr

INSTITUTE OF ELECTRICAL AND ELECTRONICS ENGINEERS (IEEE)
445 Hoes Lane or 2001 L Street, NW. Suite 700
Piscataway, NJ 08855-1331 or Washington, DC 20036-4910 USA
Ph: 732-981-0060 or 800-701-4333
Fax: 732-562-6380
E-mail: onlinesupport@ieee.org or ieeeusa@ieee.org
Internet: http://www.ieee.org

NATIONAL FIRE PROTECTION ASSOCIATION (NFPA)
1 Batterymarch Park
Quincy, MA 02169-7471
Ph: 617-770-3000 or 800-344-3555
Fax: 617-770-0700
E-mail: webmaster@nfpa.org
Internet: http://www.nfpa.org

STATE OF VIRGINIA ADMINISTRATIVE CODE (VAC)
Virginia Code Commission
General Assembly Building, 2nd Floor
910 Capitol Street
Richmond, Virginia 23219
Ph: 804-786-3591
Fax: 804-692-0625
E-mail: tlong@dls.virginia.gov (Tina Long)
Internet: http://register.dls.virginia.gov

STEEL TANK INSTITUTE (STI)
944 Donata Ct.
Lake Zurich, IL 60047
Ph: 847-438-8265

Fax: 847-438-8766
E-mail: lagibson@steeltank.com
Internet: http://www.steeltank.com

UNDERWRITERS LABORATORIES (UL)
2600 N.W. Lake Road
Camas, WA 98607-8542
Ph: 877-854-3577
Fax: 360-817-6278
E-mail: CEC.us@us.ul.com
Internet: http://www.ul.com/
UL Directories available through IHS at http://www.ihs.com

U.S. AIR FORCE (USAF)
Air Force Publishing Distribution Center
E-mail: afdpo-ppl@pentagon.af.mil
Internet: http://www.e-publishing.af.mil/

U.S. ARMY (DA)
U.S. Army Publishing Directorate
Ph: 314-592-0910
Fax: 314-592-0923
Internet: http://www.apd.army.mil

U.S. ARMY CORPS OF ENGINEERS (USACE)
Order CRD-C DOCUMENTS from:
U.S. Army Engineer Waterways Experiment Station
ATTN: Technical Report Distribution Section, Services
Branch, TIC
3909 Halls Ferry Road
Vicksburg, MS 39180-6199
E-mail: MTC-INFO@erdc.usace.army.mil
Internet:
http://gsl.erdc.usace.army.mil/SL/MTC/handbook/handbook.htm
Order Other Documents from:
USACE Publications Depot
Attn: CEHEC-IM-PD
2803 52nd Avenue
Hyattsville, MD 20781-1102
Ph: 301-394-0081
Fax: 301-394-0084
E-mail: pubs-army@usace.army.mil
Internet: http://www.usace.army.mil/publications
or
http://www.hnc.usace.army.mil/Missions/Engineering/TECHINFO.aspx

U.S. DEPARTMENT OF DEFENSE (DOD)
Order DOD Documents from:
Room 3A750-The Pentagon
1400 Defense Pentagon
Washington, DC 20301-1400
Ph: 703-571-3343
FAX: 215-697-1462
E-mail: pia@hq.afis.asd.mil
Internet: http://www.dod.gov
Obtain Military Specifications, Standards and Related Publications
from:
Acquisition Streamlining and Standardization Information System
(ASSIST)

Department of Defense Single Stock Point (DODSSP)
Document Automation and Production Service (DAPS)
Building 4/D
700 Robbins Avenue
Philadelphia, PA 19111-5094
Ph: 215-697-6396 - for account/password issues
Internet: http://assist.daps.dla.mil/online/start/; account registration required
Obtain Unified Facilities Criteria (UFC) from:
Whole Building Design Guide (WBDG)
National Institute of Building Sciences (NIBS)
1090 Vermont Avenue NW, Suite 700
Washington, CD 20005
Ph: 202-289-7800
Fax: 202-289-1092
Internet: http://www.wbdg.org/references/docs_refs.php

U.S. DEPARTMENT OF ENERGY (DOE)
Order from:
1000 Independence Avenue Southwest
Washington, D.C. 20585
Ph: 202-586-5000
Fax: 202-586-4403
E-mail: The Secretary@hq.doe.gov
Internet: www.eh.doe.gov

U.S. DEPARTMENT OF HOUSING AND URBAN DEVELOPMENT (HUD)
Order from:
HUD User
P.O. Box 23268
Washington, DC 20026-3268
Ph: 800-245-2691 or 202-708-9981
Fax: 202-708-9981
E-mail: helpdesk@Huduser.org
Internet: http://www.huduser.org

U.S. FEDERAL AVIATION ADMINISTRATION (FAA)
Order for sale documents from:
Superintendent of Documents
U.S. Government Printing Office (GPO)
732 North Capitol Street, NW
Washington, DC 20401
Ph: 202-512-1800
Fax: 202-512-2104
E-mail: contactcenter@gpo.gov
Internet: http://www.gpoaccess.gov
Order free documents from:
Federal Aviation Administration
Department of Transportation
800 Independence Avenue, SW
Washington, DC 20591
Ph: 1-866-835-5322
Internet: http://www.faa.gov

U.S. FEDERAL HIGHWAY ADMINISTRATION (FHWA)
FHWA, Office of Safety
1200 New Jersey Ave., SE
Washington, DC 20590-
Ph: 202-366-0411

Fax: 202-366-2249
E-mail: contactcenter@gpo.gov
Internet: http://www.safety.fhwa.dot.gov
Order from:
Superintendent of Documents
U. S. Government Printing Office (GPO)
732 North Capitol Street, NW
Washington, DC 20401
Ph: 202-512-1800
Fax: 202-512-2104
E-mail: contactcenter@gpo.gov
Internet: http://www.gpoaccess.gov

U.S. NATIONAL ARCHIVES AND RECORDS ADMINISTRATION (NARA)
8601 Adelphi Road
College Park, MD 20740-6001
Ph: 866-272-6272
Fax: 301-837-0483
E-mail: contactcenter@gpo.gov
Internet: http://www.archives.gov
Order documents from:
Superintendent of Documents
U.S.Government Printing Office (GPO)
732 North Capitol Street, NW
Washington, DC 20401
Ph: 202-512-1800
Fax: 202-512-2104
E-mail: contactcenter@gpo.gov
Internet: http://www.gpoaccess.gov

U.S. NAVAL FACILITIES ENGINEERING COMMAND (NAVFAC)
1322 Patterson Ave. SE, Suite 1000
Washington Navy Yard, DC 20374
Ph: 757-322-4200
Fax: 757-322-4416
Internet: http://www.navfac.navy.mil

PART 2 PRODUCTS

Not used

PART 3 EXECUTION

Not used

-- End of Section --

SECTION 01 45 00.00 20

QUALITY CONTROL
11/11

PART 1 GENERAL

1.1 REFERENCES

The publications listed below form a part of this specification to the extent referenced. The publications are referred to in the text by the basic designation only.

AMERICAN PETROLEUM INSTITUTE (API)

API Std 653	(2013) Tank Inspection, Repair, Alteration, and Reconstruction

U.S. ARMY CORPS OF ENGINEERS (USACE)

EM 385-1-1	(2008; Errata 1-2010; Changes 1-3 2010; Changes 4-6 2011; Change 7 2012) Safety and Health Requirements Manual

1.2 SUBMITTALS

Government approval is required for submittals with a "G" designation; submittals not having a "G" designation are for Contractor Quality Control approval. Submit the following in accordance with Section 01 33 00 SUBMITTAL PROCEDURES

SD-01 Preconstruction Submittals

Construction Quality Control (QC) Plan; G

Submit a Construction QC Plan prior to start of construction.

SD-06 Test Reports

Weekly written Reports; G

The QC shall also submit weekly reports containing quantities for all phases of the repair work to the Contracting Officer and to the Design Manager. These reports shall be utilized by the Contracting Officer to verify payment quantities.

Post Pile Installation Inspection Survey Report; G

Post Bent Cap Installation Inspection Survey Report; G

SD-07 Certificates

CA Resume

API Std 653 Certified Tank Inspector; G

SD-10 Operation and Maintenance Data

Training Plan

For each training session submit dates, start and finish times, and locations; outline of the information to be presented; names and qualifications of the presenters; and list of texts and other materials required to support training.

SD-11 Closeout Submittals

Final Concrete Repair Quality Control Report; G

Training Outline; G

Training Video Recording; G

Validation of Training Completion; G

1.3 INFORMATION FOR THE CONTRACTING OFFICER

Prior to commencing work on construction, the Contractor can obtain a single copy set of the current report forms from the Contracting Officer. The report forms will consist of the Contractor Production Report, Contractor Production Report (Continuation Sheet), Contractor Quality Control (CQC) Report, (CQC) Report (Continuation Sheet), Preparatory Phase Checklist, Initial Phase Checklist, Rework Items List, and Testing Plan and Log.

Deliver the following to the Contracting Officer during Construction:

a. CQC Report: Mail or hand-carry the original (wet signatures) and 6 copies by 10:00 AM the next working day after each day that work is performed and for every seven consecutive calendar days of no-work.

b. Contractor Production Report: Submit the report electronically by 10:00 AM the next working day after each day that work is performed and for every seven consecutive calendar days of no-work attached to the CQC Report.

c. Preparatory Phase Checklist: Submit the report electronically in the same manner as the CQC Report for each Preparatory Phase held.

d. Initial Phase Checklist: Submit the report electronically in the same manner as the CQC Report for each Initial Phase held.

e. Field Test Reports: Within two working days after the test is performed, submit the report as an electronic attachment to the CQC Report.

f. Monthly Summary Report of Tests: Submit the report as an electronic attachment to the CQC Report at the end of each month.

g. Testing Plan and Log: Submit the report as an electronic attachment to the CQC Report, at the end of each month. A copy of the final Testing Plan and Log shall be provided to the OMSI preparer for inclusion into the OMSI documentation.

h. Rework Items List: Submit lists containing new entries daily, in the same manner as the CQC Report.

i. CQC Meeting Minutes: Within two working days after the meeting is held, submit the report as an electronic attachment to the CQC Report.

j. QC Certifications: As required by the paragraph entitled "QC Certifications."

1.4 QC PROGRAM REQUIREMENTS

Establish and maintain a QC program as described in this section. This QC program is a key element in meeting the objectives of NAVFAC Commissioning. The QC program consists of a QC Organization, QC Plan, QC Plan Meeting(s), a Coordination and Mutual Understanding Meeting, QC meetings, three phases of control, submittal review and approval, testing, completion inspections, and QC certifications and documentation necessary to provide materials, equipment, workmanship, fabrication, construction and operations which comply with the requirements of this Contract. The QC program must cover on-site and off-site work and be keyed to the work sequence. No construction work or testing may be performed unless the QC Manager is on the work site. The QC Manager must report to an officer of the firm and not be subordinate to the Project Superintendent or the Project Manager. The QC Manager, Project Superintendent and Project Manager must work together effectively. Although the QC Manager is the primary individual responsible for quality control, all individuals will be held responsible for the quality of work on the job.

1.4.1 Commissioning

Commissioning (Cx) is a systematic process of ensuring that all building systems meet the requirements and perform interactively according to the Contract. The QC Program is a key to this process by coordinating, verifying and documenting measures to achieve the following objectives:

a. Verify and document that the applicable equipment and systems are installed in accordance with the design intent as expressed through the Contract and according to the manufacturer's recommendations and industry accepted minimum standards.

b. Verify and document that equipment and systems receive complete operational checkout by the installing contractors.

c. Verify and document proper performance of equipment and systems.

d. Verify that Operation and Maintenance (O&M) documentation is complete.

e. Verify and document that the Government's operating personnel are adequately trained.

1.4.2 Acceptance of the Construction Quality Control (QC) Plan

Acceptance of the QC Plan is required prior to the start of construction. The Contracting Officer reserves the right to require changes in the QC Plan and operations as necessary, including removal of personnel, to ensure the specified quality of work. The Contracting Officer reserves the right to interview any member of the QC organization at any time in order to verify the submitted qualifications. All QC organization personnel are subject to acceptance by the Contracting Officer. The Contracting Officer may require the removal of any individual for non-compliance with quality requirements specified in the Contract.

1.4.3 Preliminary Construction Work Authorized Prior to Acceptance

The only construction work that is authorized to proceed prior to the acceptance of the QC Plan is mobilization of storage and office trailers, temporary utilities, and surveying.

1.4.4 Notification of Changes

Notify the Contracting Officer, in writing, of any proposed changes in the QC Plan or changes to the QC organization personnel, a minimum of 10 work days prior to a proposed change. Proposed changes are subject to acceptance by the Contracting Officer.

1.5 QC ORGANIZATION

1.5.1 QC Manager

1.5.1.1 Duties

Provide a QC Manager at the work site to implement and manage the QC program. In addition to implementing and managing the QC program, the QC Manager may perform the duties of Project Superintendent. The QC Manager is required to attend the partnering meetings, QC Plan Meetings, Coordination and Mutual Understanding Meeting, conduct the QC meetings, perform the three phases of control, perform submittal review and approval, ensure testing is performed and provide QC certifications and documentation required in this Contract. The QC Manager is responsible for managing and coordinating the three phases of control and documentation performed by testing laboratory personnel and any other inspection and testing personnel required by this Contract. The QC Manager is the manager of all QC activities.

1.5.1.2 Qualifications

An individual with a minimum of 10 years combined experience in the following positions: Project Superintendent, QC Manager, Project Manager, Project Engineer or Construction Manager on similar size and type construction contracts which included the major trades that are part of this Contract. The individual must have at least two years experience as a QC Manager. The individual must be familiar with the requirements of EM 385-1-1, and have experience in the areas of hazard identification, safety compliance, and sustainability.

1.5.2 Commissioning Authority

1.5.2.1 Duties

Provide a Commissioning Authority (CA) as key person for the Cx and documentation thereof, who is subordinate to the QC Manager. The CA directs and coordinates Cx activities and submits Cx reports to the Contracting Officer to meet the submittal and reporting requirements of Section 33 08 55. The CA coordinates the actions of the Testing Laboratory personnel, and other inspection and testing personnel required by this Contract for building Cx.

1.5.2.2 Qualifications

The CA must be certified as a commissioning professional by the Association of Energy Engineers (AEE), the Building Commissioning Association (BCA),

the National Environmental Balancing Bureau (NEBB), or the University of Wisconsin - Madison (UWM). CA resume is required, providing education, experience and management capabilities on at least two similar size and type contracts. The CA may not have been involved with the project design, construction management, or supervision, and must be with a third-party that is not on the design team.

1.5.3 Construction Quality Management Training

In addition to the above experience and education requirements, the QC Manager must have completed the course entitled "Construction Quality Management (CQM) for Contractors." If the QC Manager does not have a current certification, they must obtain the CQM for Contractors course certification within 90 days of award. This course is periodically offered by the Naval Facilities Engineering Command and the Army Corps of Engineers. Contact the Contracting Officer for information on the next scheduled class.

1.5.4 Alternate QC Manager Duties and Qualifications

Designate an alternate for the QC Manager at the work site to serve in the event of the designated QC Manager's absence. The period of absence may not exceed two weeks at one time, and not more than 30 workdays during a calendar year. The qualification requirements for the Alternate QC Manager must be the same as for the QC Manager.

1.5.5 QC Specialists Duties and Qualifications

Provide a separate QC Specialist at the work site for each of the areas of responsibilities, specified below, who shall assist and report to the QC Manager and who may perform production related duties but must be allowed sufficient time to perform their assigned quality control duties. QC Specialists are required to attend the Coordination and Mutual Understanding Meeting, QC meetings, and be physically present at the construction site to perform the three phases of control and prepare documentation for each definable feature of work in their area of responsibility at the frequency specified below.

Qualification/Experience in Area of Responsibility	Area of Responsibility	Frequency
Coating Inspector/(no other duties) SSPC QP 5, Level III	See Sections 09 97 13.15, 09 97 13.17, 09 97 13.27, pre-preparation testing, surface preparation, coating application, initial cure and coating repair work	Full time during coating work
Coating Manufacturer's Representative/5 years minimum	Coating Application	Pre-application

Qualification/Experience in Area of Responsibility	Area of Responsibility	Frequency
Tank Erector Site Supervisor/10 years experience	See Section 33 56 13.13 tank erection and testing	Full time during erection and testing
API Std 653 Certified Tank Inspector/5 years minimum	See Section 33 56 13.13 tank erection and testing	One eight hour day per week during erection and testing
Single System Supplier/ See Section 33 52 43.14	See Section 33 52 43.14 Aviation Fuel Control Valves	Full time during startup, testing and training
Control Valve Manufacturer's Representative/ 5 years	See Section 33 52 43.14 Aviation Fuel Control Valves	Full time during startup and testing

1.5.6 Submittal Reviewer Duties and Qualifications

Each submittal must be reviewed by an individual with 10 years of construction experience.

Provide a Submittal Reviewer, other than the QC Manager or CA, qualified in the disciplines being reviewed, to review and certify that the submittals meet the requirements of this Contract prior to certification or approval by the QC Manager.

1.5.6.1 Post Pile Installation Inspection Survey Report

Prior to installing formwork, reinforcing, and placing precast and CIP concrete for the concrete bent caps, the Contractor shall perform a Level 1 close visual examination, which involves confirming construction documents and detecting obvious major damage or deterioration due to overstress or impacts during installation. Inspector shall also verify alignment (straightness) of piles from top to bottom. Piles shall be inspected from the top of the pile down to the mudline.

Documentation must be clear and concise. Inspectors should maintain daily logs of inspection details including measurement data, locations of

observation, photographs, and water depths. Fill out inspection forms as the inspection progresses, and complete and submit the reports to the Contracting Officer within 7 days after the inspection has been finished. Standard forms and report formats facilitate the documentation procedure and are essential for verifying required repairs. Figure 1 is a standard form that may be used for reporting the condition of the piles. Photographic documentation of all damage or deterioration should accompany this form with detailed description of identifying the pile and location of the damage or deterioration.

PILE INSPECTION RECORD		
LOCATION	DATE	DIVERS
PIER NAME/NO.	PILE TYPE	PILE MATERIAL
	BEARING FENDER SHEET	TIMBER STEEL REINF. CONC.

WATER DEPTH	TIME OF DAY	TIDE	DEPTH OF DAMAGE FROM DATUM-GAUGE DEPTH-TIDE

EN NO	IL NO	NI	PILE CONDITION					TYPE DAMAGE			GAUGE DEPTH DAMAGE	DIMENSIONS OF DAMAGE			COMMENTS
			ND	MD	MD	MJ	SV	MECH	SHC	FUNC		HGT	WIDTH	PENETR	

1.5.6.2 Post Bent Cap Installation Inspection Survey Report

Prior to installing precast panels or other appurtenances on the bent or dolphin caps the Contractor shall perform a Level 1 close visual examination of all concrete caps, which involves confirming construction documents and detecting obvious major damage or imperfections due to overstress, alignment (rotation), poor consolidation (particularly around piles) and finishing during installation.

Documentation must be clear and concise. Inspectors should maintain daily logs of inspection details including measurement data, locations of observation, and photographs. Fill out inspection forms as the inspection progresses, and complete and submit the reports to the Contracting Officer within 7 days after the inspection has been finished. Standard forms and report formats facilitate the documentation procedure and are essential for verifying required repairs. Figure 1 is a standard form that may be used for reporting the condition of the concrete caps. Photographic documentation of all damage or deterioration should accompany this form with detailed description of identifying the pile and location of the damage or deterioration.

1.6 QUALITY CONTROL (QC) PLAN

1.6.1 Construction Quality Control (QC) Plan

1.6.1.1 Requirements

Provide, for acceptance by the Contracting Officer, a Construction QC Plan submitted in a three-ring binder that includes a table of contents, with major sections identified with tabs, with pages numbered sequentially, and that documents the proposed methods and responsibilities for accomplishing commissioning activities during the construction of the project:

a. QC ORGANIZATION: A chart showing the QC organizational structure.

b. NAMES AND QUALIFICATIONS: Names and qualifications, in resume format, for each person in the QC organization. Include the CQM for Contractors course certifications for the QC Manager and Alternate QC Manager as required by the paragraphs entitled "Construction Quality Management Training" and "Alternate QC Manager Duties and Qualifications".

c. DUTIES, RESPONSIBILITY AND AUTHORITY OF QC PERSONNEL: Duties, responsibilities, and authorities of each person in the QC organization.

d. OUTSIDE ORGANIZATIONS: A listing of outside organizations, such as architectural and consulting engineering firms, that will be employed by the Contractor and a description of the services these firms will provide.

e. APPOINTMENT LETTERS: Letters signed by an officer of the firm appointing the QC Manager and Alternate QC Manager and stating that they are responsible for implementing and managing the QC program as

described in this Contract. Include in this letter the responsibility of the QC Manager and Alternate QC Manager to implement and manage the three phases of control, and their authority to stop work which is not in compliance with the Contract. Letters of direction are to be issued by the QC Manager to all other QC Specialists outlining their duties, authorities, and responsibilities. Include copies of the letters in the QC Plan.

f. SUBMITTAL PROCEDURES AND INITIAL SUBMITTAL REGISTER: Procedures for reviewing, approving, and managing submittals. Provide the name(s) of the person(s) in the QC organization authorized to review and certify submittals prior to approval. Provide the initial submittal of the Submittal Register as specified in Section 01 33 00 SUBMITTAL PROCEDURES.

g. TESTING LABORATORY INFORMATION: Testing laboratory information required by the paragraphs entitled "Accreditation Requirements", as applicable.

h. TESTING PLAN AND LOG: A Testing Plan and Log that includes the tests required, referenced by the specification paragraph number requiring the test, the frequency, and the person responsible for each test. Use Government forms to log and track tests.

i. PROCEDURES TO COMPLETE REWORK ITEMS: Procedures to identify, record, track, and complete rework items. Use Government forms to record and track rework items.

j. DOCUMENTATION PROCEDURES: Use Government form.

k. LIST OF DEFINABLE FEATURES: A Definable Feature of Work (DFOW) is a task that is separate and distinct from other tasks and has control requirements and work crews unique to that task. A DFOW is identified by different trades or disciplines and is an item or activity on the construction schedule. Include in the list of DFOWs, but not be limited to, all critical path activities on the NAS. Include all activities for which this specification requires QC Specialists or specialty inspection personnel. Provide separate DFOWs in the Network Analysis Schedule for each design development stage and submittal package.

l. PROCEDURES FOR PERFORMING THE THREE PHASES OF CONTROL: Identify procedures used to ensure the three phases of control to manage the quality on this project. For each DFOW, a Preparatory and Initial phase checklist will be filled out during the Preparatory and Initial phase meetings. Conduct the Preparatory and Initial Phases and meetings with a view towards obtaining quality construction by planning ahead and identifying potential problems for each DFOW.

m. PERSONNEL MATRIX: Not Applicable.

n. PROCEDURES FOR COMPLETION INSPECTION: Procedures for identifying and documenting the completion inspection process. Include in these procedures the responsible party for punch out inspection, pre-final inspection, and final acceptance inspection.

o. TRAINING PROCEDURES AND TRAINING LOG: Procedures for coordinating and documenting the training of personnel required by the Contract. Include a sample record of training for reporting what systems were

included in the training, who provided the training, when and where the training was performed and who attended the training.

p. ORGANIZATION AND PERSONNEL CERTIFICATIONS LOG: Procedures for coordinating, tracking and documenting all certifications on subcontractors, testing laboratories, suppliers, personnel, etc. QC Manager will ensure that certifications are current, appropriate for the work being performed, and will not lapse during any period of the contract that the work is being performed.

1.7 QC PLAN MEETINGS

Prior to submission of the QC Plan, the QC Manager will meet with the Contracting Officer to discuss the QC Plan requirements of this Contract. The purpose of this meeting is to develop a mutual understanding of the QC Plan requirements prior to plan development and submission and to agree on the Contractor's list of DFOWs.

1.8 COORDINATION AND MUTUAL UNDERSTANDING MEETING

After submission of the QC Plan, and prior to the start of construction, the QC Manager will meet with the Contracting Officer to present the QC program required by this Contract. When a new QC Manager is appointed, the coordination and mutual understanding meeting shall be repeated.

1.8.1 Purpose

The purpose of this meeting is to develop a mutual understanding of the QC details, including documentation, administration for on-site and off-site work, design intent, Cx, environmental requirements and procedures, coordination of activities to be performed, and the coordination of the Contractor's management, production, and QC personnel. At the meeting, the Contractor will be required to explain in detail how three phases of control will be implemented for each DFOW, as well as how each DFOW will be affected by each management plan or requirement as listed below:

a. Waste Management Plan.

b. IAQ Management Plan.

c. Procedures for noise and acoustics management.

d. Environmental Protection Plan.

e. Environmental regulatory requirements.

f. Cx Plan.

1.8.2 Coordination of Activities

Coordinate activities included in various sections to assure efficient and orderly installation of each component. Coordinate operations included under different sections that are dependent on each other for proper installation and operation. Schedule construction operations with consideration for indoor air quality as specified in the IAQ Management Plan. Coordinate prefunctional tests and startup testing with Cx.

1.8.3 Attendees

As a minimum, the Contractor's personnel required to attend include an officer of the firm, the Project Manager, Project Superintendent, QC Manager, Alternate QC Manager, CA, Environmental Manager, and subcontractor representatives. Each subcontractor who will be assigned QC responsibilities shall have a principal of the firm at the meeting. Minutes of the meeting will be prepared by the QC Manager and signed by the Contractor and the Contracting Officer. Provide a copy of the signed minutes to all attendees and shall be included in the QC Plan.

1.9 QC MEETINGS

After the start of construction, conduct weekly QC meetings by the QC Manager at the work site with the Project Superintendent, the CA, and the foremen who are performing the work of the DFOWs. The QC Manager is to prepare the minutes of the meeting and provide a copy to the Contracting Officer within two working days after the meeting. The Contracting Officer may attend these meetings. As a minimum, accomplish the following at each meeting:

a. Review the minutes of the previous meeting.

b. Review the schedule and the status of work and rework.

c. Review the status of submittals.

d. Review the work to be accomplished in the next two weeks and documentation required.

e. Resolve QC and production problems (RFI, etc.).

f. Address items that may require revising the QC Plan.

g. Review Accident Prevention Plan (APP).

h. Review environmental requirements and procedures.

i. Review Waste Management Plan.

j. Review IAQ Management Plan.

k. Review Environmental Management Plan.

l. Review the status of training completion.

m. Review Cx Plan and progress.

1.10 THREE PHASES OF CONTROL

Adequately cover both on-site and off-site work with the Three Phases of Control and include the following for each DFOW.

1.10.1 Preparatory Phase

Notify the Contracting Officer at least two work days in advance of each preparatory phase meeting. The meeting will be conducted by the QC Manager and attended by the Project Superintendent, the CA, and the foreman responsible for the DFOW. When the DFOW will be accomplished by a

subcontractor, that subcontractor's foreman shall attend the preparatory phase meeting. Document the results of the preparatory phase actions in the daily Contractor Quality Control Report and in the Preparatory Phase Checklist. Perform the following prior to beginning work on each DFOW:

a. Review each paragraph of the applicable specification sections.

b. Review the Contract drawings.

c. Verify that field measurements are as indicated on construction and/or shop drawings before confirming product orders, in order to minimize waste due to excessive materials.

d. Verify that appropriate shop drawings and submittals for materials and equipment have been submitted and approved. Verify receipt of approved factory test results, when required.

e. Review the testing plan and ensure that provisions have been made to provide the required QC testing.

f. Examine the work area to ensure that the required preliminary work has been completed.

g. Coordinate the schedule of product delivery to designated prepared areas in order to minimize site storage time and potential damage to stored materials.

h. Arrange for the return of shipping/packaging materials, such as wood pallets, where economically feasible.

i. Examine the required materials, equipment and sample work to ensure that they are on hand and conform to the approved shop drawings and submitted data.

j. Discuss specific controls used and construction methods, construction tolerances, workmanship standards, and the approach that will be used to provide quality construction by planning ahead and identifying potential problems for each DFOW.

k. Review the APP and appropriate Activity Hazard Analysis (AHA) to ensure that applicable safety requirements are met, and that required Material Safety Data Sheets (MSDS) are submitted.

l. Review the Cx Plan and ensure all preliminary work items have been completed and documented.

1.10.2 Initial Phase

Notify the Contracting Officer at least two work days in advance of each initial phase. When construction crews are ready to start work on a DFOW, conduct the initial phase with the Project Superintendent, and the foreman responsible for that DFOW. Observe the initial segment of the DFOW to ensure that the work complies with Contract requirements. Document the results of the initial phase in the daily CQC Report and in the Initial Phase Checklist. Repeat the initial phase for each new crew to work on-site, or when acceptable levels of specified quality are not being met. Perform the following for each DFOW:

a. Establish the quality of workmanship required.

b. Resolve conflicts.

c. Ensure that testing is performed by the approved laboratory.

d. Check work procedures for compliance with the APP and the appropriate AHA to ensure that applicable safety requirements are met.

e. Review the Cx Plan and ensure all preparatory work items have been completed and documented.

1.10.3 Follow-Up Phase

Perform the following for on-going work daily, or more frequently as necessary, until the completion of each DFOW and document in the daily CQC Report:

a. Ensure the work is in compliance with Contract requirements.

b. Maintain the quality of workmanship required.

c. Ensure that testing is performed by the approved laboratory.

d. Ensure that rework items are being corrected.

e. Assure manufacturers representatives have performed necessary inspections if required and perform safety inspections.

f. Review the Cx Plan and ensure all work items, testing, and documentation has been completed.

1.10.4 Additional Preparatory and Initial Phases

Conduct additional preparatory and initial phases on the same DFOW if the quality of on-going work is unacceptable, if there are changes in the applicable QC organization, if there are changes in the on-site production supervision or work crew, if work on a DFOW is resumed after substantial period of inactivity, or if other problems develop.

1.10.5 Notification of Three Phases of Control for Off-Site Work

Notify the Contracting Officer at least two weeks prior to the start of the preparatory and initial phases.

1.11 SUBMITTAL REVIEW AND APPROVAL

Procedures for submission, review and approval of submittals are described in Section 01 33 00 SUBMITTAL PROCEDURES.

1.12 TESTING

Except as stated otherwise in the specification sections, perform sampling and testing required under this Contract.

1.12.1 Accreditation Requirements

Construction materials testing laboratories must be accredited by a laboratory accreditation authority and will be required to submit a copy of the Certificate of Accreditation and Scope of Accreditation. The

laboratory's scope of accreditation must include the appropriate ASTM standards (E 329, C 1077, D 3666, D 3740, A 880, E 543) listed in the technical sections of the specifications. Laboratories engaged in Hazardous Materials Testing shall meet the requirements of OSHA and EPA. The policy applies to the specific laboratory performing the actual testing, not just the Corporate Office.

1.12.2 Laboratory Accreditation Authorities

Laboratory Accreditation Authorities include the National Voluntary Laboratory Accreditation Program (NVLAP) administered by the National Institute of Standards and Technology at http://ts.nist.gov/ts/htdocs/210/214/214.htm , the American Association of State Highway and Transportation Officials (AASHTO) program at http://www.transportation.org/aashto/home.nsf/frontpage , International Accreditation Services, Inc. (IAS) at http://www.iasonline.org, U. S. Army Corps of Engineers Materials Testing Center (MTC)at http://www.wes.army.mil/SL/MTC/, the American Association for Laboratory Accreditation (A2LA) program at http://www.a2la.org/, the Washington Association of Building Officials (WABO) at http://www.wabo.org/ (Approval authority for WABO is limited to projects within Washington State), and the Washington Area Council of Engineering Laboratories (WACEL) at http://www.wacel.org/labaccred.html (Approval authority by WACEL is limited to projects within Facilities Engineering Command (FEC) Washington geographical area).

1.12.3 Capability Check

The Contracting Officer retains the right to check laboratory equipment in the proposed laboratory and the laboratory technician's testing procedures, techniques, and other items pertinent to testing, for compliance with the standards set forth in this Contract.

1.12.4 Test Results

Cite applicable Contract requirements, tests or analytical procedures used. Provide actual results and include a statement that the item tested or analyzed conforms or fails to conform to specified requirements. If the item fails to conform, notify the Contracting Officer immediately. Conspicuously stamp the cover sheet for each report in large red letters "CONFORMS" or "DOES NOT CONFORM" to the specification requirements, whichever is applicable. Test results must be signed by a testing laboratory representative authorized to sign certified test reports. Furnish the signed reports, certifications, and other documentation to the Contracting Officer via the QC Manager. Furnish a summary report of field tests at the end of each month, per the paragraph entitled "INFORMATION FOR THE CONTRACTING OFFICER".

1.12.5 Test Reports and Monthly Summary Report of Tests

Furnish the signed reports, certifications, and a summary report of field tests at the end of each month to the Contracting Officer. Attach a copy of the summary report to the last daily Contractor Quality Control Report of each month. Provide a copy of the signed test reports and certifications to the OMSI preparer for inclusion into the OMSI documentation.

1.13 QC CERTIFICATIONS

1.13.1 CQC Report Certification

Contain the following statement within the CQC Report: "On behalf of the Contractor, I certify that this report is complete and correct and equipment and material used and work performed during this reporting period is in compliance with the contract drawings and specifications to the best of my knowledge, except as noted in this report."

1.13.2 Invoice Certification

Furnish a certificate to the Contracting Officer with each payment request, signed by the QC Manager, attesting that as-built drawings are current, coordinated and attesting that the work for which payment is requested, including stored material, is in compliance with Contract requirements.

1.13.3 Completion Certification

Upon completion of work under this Contract, the QC Manager shall furnish a certificate to the Contracting Officer attesting that "the work has been completed, inspected, tested and is in compliance with the Contract." Provide a copy of this final QC Certification for completion to the OMSI preparer for inclusion into the OMSI documentation.

1.14 COMPLETION INSPECTIONS

1.14.1 Punch-Out Inspection

Near the completion of all work or any increment thereof, established by a completion time stated in the Contract Clause entitled "Commencement, Prosecution, and Completion of Work," or stated elsewhere in the specifications, the QC Manager and the CA must conduct an inspection of the work and develop a "punch list" of items which do not conform to the approved drawings, specifications and Contract. Include in the punch list any remaining items on the "Rework Items List", which were not corrected prior to the Punch-Out Inspection. Include within the punch list the estimated date by which the deficiencies will be corrected. Provide a copy of the punch list to the Contracting Officer. The QC Manager, or staff, must make follow-on inspections to ascertain that all deficiencies have been corrected. Once this is accomplished, notify the Government that the facility is ready for the Government "Pre-Final Inspection".

1.14.2 Pre-Final Inspection

The Government and QCM will perform this inspection to verify that the facility is complete and ready to be occupied. A Government "Pre-Final Punch List" will be documented by the CQM as a result of this inspection. The QC Manager will ensure that all items on this list are corrected prior to notifying the Government that a "Final" inspection with the Client can be scheduled. Any items noted on the "Pre-Final" inspection must be corrected in a timely manner and be accomplished before the contract completion date for the work,or any particular increment thereof, if the project is divided into increments by separate completion dates.

1.14.3 Final Acceptance Inspection

Notify the Contracting Officer at least 14 calendar days prior to the date a final acceptance inspection can be held. State within the notice that all

items previously identified on the pre-final punch list will be corrected and acceptable, along with any other unfinished Contract work, by the date of the final acceptance inspection. The Contractor must be represented by the QC Manager, the Project Superintendent, the CA, and others deemed necessary. Attendees for the Government will include the Contracting Officer, other FEAD/ROICC personnel, and personnel representing the Client. Failure of the Contractor to have all contract work acceptably complete for this inspection will be cause for the Contracting Officer to bill the Contractor for the Government's additional inspection cost in accordance with the Contract Clause entitled "Inspection of Construction."

1.15 TRAINING

Prior to acceptance of the facility by the Contracting Officer for beneficial occupancy, the QC Manager or Contractor must provide a comprehensive project-specific Government personnel training program for the systems and equipment of the facility specified in the technical specifications of this Contract. The trainees must include the Contracting Officer, facilities managers, maintenance staff. The Contractor is responsible for coordinating, scheduling, and ensuring that training is completed. Instructors shall be well-versed in the particular systems that they are presenting. Provide instruction time on site at a location approved by the Contracting Officer.

1.15.1 Training Plan

Submit a written training plan to the Contracting Officer and CA for review and approval prior to training. Coordinated and scheduled the training with the Contracting Officer and CA. Include within the plan the following elements:

a. Equipment included in training.

b. Intended audience.

c. Location of training.

d. Objectives.

e. Subjects covered including description.

f. Duration of training on each subject.

g. Methods (classroom lecture, video, site walk-through, actual operational demonstrations, written handouts, etc.).

h. Instructor and instructor qualifications for each subject.

1.15.2 Content

Stress and enhance the importance of system interactions, troubleshooting, and long-term preventative maintenance and operation. The core of this training will be based on manufacturer's recommendations and the operation and maintenance information provided as a part of this Contract. A review of environmentally-related aspects of the Operation and Maintenance Manuals shall be included. Include the following for each commissioned system:

a. Design intent.

b. Use of O&M Manuals.

c. Review of control drawings and schematics.

d. Start-up, normal operation, shutdown, unoccupied operation, seasonal changeover, manual operation, controls set-up and programming, troubleshooting, and alarms.

e. Interactions with other systems.

f. Adjustments and optimizing methods for energy conservation.

g. Relevant health and safety issues.

h. Special maintenance and replacement sources.

i. Tenant interaction issues.

j. Discussion of how the feature or system is environmentally responsive.

1.15.3 Training Outline

The CA is responsible for overseeing and approving the content and adequacy of the training. The CA must interview the Government facilities manager and Contracting Officer to determine the special needs and areas where training will be most valuable. The Contracting Officer and CA must decide how rigorous the training should be for each piece of equipment. The CA is to communicate the results to the Contractor, who will provide each trainee in the course a written course outline, listing the major and minor topics to be discussed by the instructor on each day of the course.

1.15.4 Video Recording

Provide to the Contracting Officer two copies of the training course in DVD video recording format, and add one copy to the O&M manual data. Capture within the recording, in video and audio, all instructors' training presentations including question and answer periods with the trainees. Videotaping of the training sessions shall be provided by the Contractor.

1.15.5 Unresolved Questions From Trainees

If, at the end of the training course, there are questions from trainees that remain unresolved, the instructor will send the answers, in writing, to the Contracting Officer for transmittal to the trainees, and the training video should be modified to include the appropriate clarifications.

1.15.6 Validation of Training Completion

Develop criteria for determining that the training was satisfactorily completed, including attending some of the training, and upon fulfillment of the criteria, validate training completion. The CA will then recommend approval of the training to the Contracting Officer using a standard form and the CA and Contracting Officer will sign the approval form. Provide completed and signed validation of training forms as provided in the QC Plan for all training sessions accomplished. Provide two copies of the signed training validation forms to the Contracting Officer and one copy to the OMSI preparer for inclusion into the OMSI documentation.

1.16 DOCUMENTATION

Maintain current and complete records of on-site and off-site QC program operations and activities.

1.16.1 Construction Documentation

Reports are required for each day that work is performed and must be attached to the Contractor Quality Control Report prepared for the same day. Maintain current and complete records of on-site and off-site QC program operations and activities. The forms identified under the paragraph "INFORMATION FOR THE CONTRACTING OFFICER" will be used. Reports are required for each day work is performed. Account for each calendar day throughout the life of the Contract. Every space on the forms must be filled in. Use N/A if nothing can be reported in one of the spaces. The Project Superintendent and the QC Manager must prepare and sign the Contractor Production and CQC Reports, respectively. The reporting of work must be identified by terminology consistent with the construction schedule. In the "remarks" sections of the reports, enter pertinent information including directions received, problems encountered during construction, work progress and delays, conflicts or errors in the drawings or specifications, field changes, safety hazards encountered, instructions given and corrective actions taken, delays encountered and a record of visitors to the work site, quality control problem areas, deviations from the QC Plan, construction deficiencies encountered, meetings held. For each entry in the report(s), identify the Schedule Activity No. that is associated with the entered remark.

1.16.2 Quality Control Validation

Establish and maintain the following in a series of three ring binders. Binders shall be divided and tabbed as shown below. These binders must be readily available to the Contracting Officer during all business hours.

a. All completed Preparatory and Initial Phase Checklists, arranged by specification section.

b. All milestone inspections, arranged by Activity Number.

c. An up-to-date copy of the Testing Plan and Log with supporting field test reports, arranged by specification section.

d. Copies of all contract modifications, arranged in numerical order. Also include documentation that modified work was accomplished.

e. An up-to-date copy of the Rework Items List.

f. Maintain up-to-date copies of all punch lists issued by the QC staff to the Contractor and Sub-Contractors and all punch lists issued by the Government.

g. Commissioning documentation including Cx checklists, schedules, tests, and reports.

1.16.3 QC Specialist Reports

Weekly written reports shall be provided to the Contracting Officer. The reports shall include, a running total of the projected repair quantities, repairs currently under execution, and overall condition of the completed

repairs. Two (2) copies of the weekly reports shall be provided to the Contracting Officer and one (1) copy shall be provided directly to the Engineer of Record. This information will be used to assist with payment invoicing. Photographs and/or video of typical repair preparation, execution, and completed concrete repair shall be submitted along with the weekly reports. After the final acceptance inspection, submit Final Concrete Repair Quality Control Report.

NOTE: This information provided in the CRQC specialist reports shall be used to assist the Contracting Officer with payment of invoicing. Payment of repairs quantities may be withheld until weekly reports have been validated by the Contracting Officer.

1.16.4 Testing Plan and Log

As tests are performed, the CA and the QC Manager will record on the "Testing Plan and Log" the date the test was performed and the date the test results were forwarded to the Contracting Officer. Attach a copy of the updated "Testing Plan and Log" to the last daily CQC Report of each month, per the paragraph "INFORMATION FOR THE CONTRACTING OFFICER". Provide a copy of the final "Testing Plan and Log" to the OMSI preparer for inclusion into the OMSI documentation.

1.16.5 Rework Items List

The QC Manager must maintain a list of work that does not comply with the Contract, identifying what items need to be reworked, the date the item was originally discovered, the date the item will be corrected by, and the date the item was corrected. There is no requirement to report a rework item that is corrected the same day it is discovered. Attach a copy of the "Rework Items List" to the last daily CQC Report of each month. The Contractor is responsible for including those items identified by the Contracting Officer.

1.16.6 As-Built Drawings

The QC Manager is required to ensure the as-built drawings, required by Section 01 78 00 CLOSEOUT SUBMITTALS are kept current on a daily basis and marked to show deviations which have been made from the Contract drawings. Ensure each deviation has been identified with the appropriate modifying documentation (e.g. PC No., Modification No., Request for Information No., etc.). The QC Manager must initial each revision. Upon completion of work, the QC Manager will furnish a certificate attesting to the accuracy of the as-built drawings prior to submission to the Contracting Officer.

1.17 NOTIFICATION ON NON-COMPLIANCE

The Contracting Officer will notify the Contractor of any detected non-compliance with the Contract. Take immediate corrective action after receipt of such notice. Such notice, when delivered to the Contractor at the work site, shall be deemed sufficient for the purpose of notification. If the Contractor fails or refuses to comply promptly, the Contracting Officer may issue an order stopping all or part of the work until satisfactory corrective action has been taken. No part of the time lost due to such stop orders will be made the subject of claim for extension of time for excess costs or damages by the Contractor.

PART 2 PRODUCTS

Not Used

PART 3 EXECUTION

3.1 PREPARATION

Designate receiving/storage areas for incoming material to be delivered according to installation schedule and to be placed convenient to work area in order to minimize waste due to excessive materials handling and misapplication. Store and handle materials in a manner as to prevent loss from weather and other damage. Keep materials, products, and accessories covered and off the ground, and store in a dry, secure area. Prevent contact with material that may cause corrosion, discoloration, or staining. Protect all materials and installations from damage by the activities of other trades.

-- End of Section --

SECTION 01 45 35

SPECIAL INSPECTIONS
08/08

PART 1 GENERAL

1.1 REFERENCES

The publications listed below form a part of this specification to the extent referenced. The publications are referred to within the text by the basic designation only.

AMERICAN CONCRETE INSTITUTE INTERNATIONAL (ACI)

ACI 318	(2011; Errata 1 2011; Errata 2 2012; Errata 3-4 2013) Building Code Requirements for Structural Concrete and Commentary

AMERICAN INSTITUTE OF STEEL CONSTRUCTION (AISC)

AISC 341	(2010) Seismic Provisions for Structural Steel Buildings
AISC 360	(2010) Specification for Structural Steel Buildings

AMERICAN SOCIETY OF CIVIL ENGINEERS (ASCE)

ASCE 7	(2010; Errata 2011; Supp 1 2013) Minimum Design Loads for Buildings and Other Structures

1.2 SYSTEM DESCRIPTION

Perform the Special Inspection for seismic-resisting system components as specified. Special Inspector personnel shall be in addition to the quality control inspections and inspectors required elsewhere in this section.

1.2.1 Continuous Special Inspection

Continuous special inspection is the full time observation of the work by the Special Inspector present in the work area whenever work is being performed. Perform continuous special inspection where specified for items as shown on the drawings.

1.2.2 Periodic Special Inspection

Periodic special inspection is the intermittent observation of the work by a Special Inspector present in the work area while work is being performed. The intermittent observation periods shall be: at times of significant work; recurrent over the complete work period; and total at least 25 percent of the total work time. Perform periodic special inspection where specified for items as shown on the drawings.

1.3 SUBMITTALS

Government approval is required for submittals with a "G" designation; submittals not having a "G" designation are for Contractor Quality Control approval. Submit the following in accordance with Section 01 33 00 SUBMITTAL PROCEDURES:

SD-07 Certificates

Special Inspector; G
Quality Control Plan; G

1.4 QUALITY CONTROL PLAN

Develop a quality control plan containing the following. Include a certificate indicating that the plan meets the content specified in this section with plan submittal.

a. A list of all items that require quality control Special Inspection and testing, including the type, frequency, extent, and duration of the special inspection for each item on this list.

b. A list of all items that require quality control testing, including the type and frequency of testing for each item on this list.

c. The content, distribution, and frequency of special inspection reports.

d. The content, distribution, and frequency of testing reports.

e. The procedures, controls, and people used within the Contractor's organization to develop, sign, and distribute Special Inspection and Testing reports along with the position title and pertinent qualifications of all Contractor personnel involved.

1.5 SPECIAL INSPECTOR

Use a Special Inspector to perform Special Inspections required by this section. Submit certification including information, which provides evidence of the knowledge and experience necessary to qualify a person as a Special Inspector for the category of work being certified, will accompany the qualification. The Special Inspector is a person employed by the Contractor and approved by the Government as being qualified by knowledge and experience to perform the Special Inspection for the category of work being constructed. Special Inspectors perform their duties independent from the construction quality control staff employed by the Contractor. More than one Special Inspector may be required to provide the varied knowledge and experience necessary to adequately inspect all of the categories of work requiring Special Inspection.

PART 2 PRODUCTS

Not Used

PART 3 EXECUTION

3.1 PERFORMANCE OF INSPECTIONS

Perform Special Inspections for the following where designated on the drawings:

3.1.1 Piles

a. Periodic special inspection during driving of piles and placement of concrete in piles.

3.1.2 Reinforcing Steel

a. Periodic special inspection during and upon completion of the placement of reinforcing steel in dike walls, tank foundation ring wall, intermediate moment frames, special moment frames and shear walls.

3.1.3 Structural Concrete

Periodic special inspection during and on completion of the placement of concrete in intermediate moment frames, special moment frames and boundary members of shear walls.

3.1.4 Structural Steel

a. Continuous special inspection for all structural welding, except that periodic special inspection is permitted for single-pass or resistance welds provided the qualifications of the welder and the welding electrodes are inspected at the beginning of the work and all welds are inspected for compliance with the approved construction documents at the completion of welding.

b. Periodic special inspection in accordance with AISC 360 for the installation of bolts in intermediate moment frames, special moment frames, special concentrically braced frames, except that bolts not required to be fully tensioned need not be inspected for bolt tension, other than to ensure that the plies of the connected elements have been brought into snug contact.

3.1.5 Cold-Formed Steel Framing

a. Periodic special inspections during all welding operations of elements of the seismic-force-resisting system.

b. Periodic special inspections for screw attachment, bolting, anchoring, and other fastening of components within the seismic-force-resisting system, including struts, braces, and hold-downs.

3.1.6 Architectural Components

Perform special inspection of the architectural components ensuring that the methods of anchoring and fastening indicated on the drawings are being complied with at the onset of construction of the components, and that the specified or shown number, spacing, and types of fasteners were actually installed. Special inspection for architectural components shall be as follows:

a. Periodic special inspection during the erection and fastening of exterior cladding, interior nonloadbearing partition walls, exterior nonloadbearing walls and masonry veneer.

b. Periodic special inspection during the anchorage of suspended ceilings and storage racks 8 feet or greater in height.

3.1.7 Mechanical and Electrical Components

Perform special inspection of the mechanical and electrical components ensuring that the methods of anchoring and fastening indicated on the drawings are being complied with at the onset of construction of the component, and that the specified or shown number, spacing, and types of fasteners were actually installed. Special inspection for mechanical and electrical components shall be as follows:

a. Periodic special inspection during the anchorage of electrical equipment for emergency or standby power systems.

b. Periodic special inspection during the installation of anchorage of all other electrical equipment.

c. Periodic special inspection during installation for flammable, combustible, or highly toxic piping systems and their associated mechanical units.

d. Periodic special inspection during the installation of HVAC ductwork that will contain hazardous materials.

3.1.8 Seismic Isolation System

Periodic special inspection during the fabrication and installation of isolator units if required.

3.1.9 Energy Dissipation System

Periodic special inspection during the fabrication and installation of energy dissipation devices if required.

3.2 TESTING

The special inspector shall be responsible for verifying that the testing requirements are performed by an approved testing agency for compliance with the following, where shown on the drawings:

a. Reinforcing: Special testing of reinforcing steel shall be as follows:

(1) Examine certified mill test reports for each shipment of reinforcing steel used in reinforced concrete intermediate frames, special moment frames and boundary members of reinforced concrete shear walls. The special inspector shall determine conformance with the construction documents.

b. Structural Concrete: Verify that samples of structural concrete obtained at the project site, along with all material components obtained at the batch plant, have been tested in accordance with the requirements of ACI 318 and comply with all acceptance provisions contained therein.

c. Structural Steel:

(1) Verify that all quality control testing needed to confirm required material properties contained in Section 05 12 00 STRUCTURAL STEEL and given in the quality control plan has been done in accordance with applicable provisions in AISC 341 and AISC 360 and that the test results comply with all acceptance provisions contained

therein.

(2) When a flange or a plate of steel member with a base metal thickness greater than 1.5 inches, is joined by welding so that the flange or plate is subjected to through-thickness weld shrinkage strains, verify that the required ultrasonic testing for discontinuities behind and adjacent to such welds has been done after joint completion. Further verify that any material discontinuities rejected on the basis of the requirements contained in Section 05 12 00 STRUCTURAL STEEL were repaired and were retested after the repairs and found acceptable.

e. Seismically Isolated Structures: Verify that the required system and component tests for seismically isolated structures have been done in accordance with ASCE 7 and comply with all acceptance provisions contained therein.

f. Energy Dissipation Systems: Verify that the required system and component tests for seismic energy dissipation systems have been done in accordance with ASCE 7 and comply with all acceptance provisions contained therein.

3.3 REPORTING AND COMPLIANCE PROCEDURES

a. On the first day of each month, furnish to the Government five copies of the combined progress reports of the special inspector's observations listing all special inspections of construction or reviews of testing performed during that month, noting all uncorrected deficiencies, and describing the corrections made both to these deficiencies and to previously reported deficiencies. Each monthly report shall be signed by all special inspectors who performed special inspections of construction or reviewed testing during that month, regardless of whether they reported any deficiencies . Each monthly report shall be signed by the Contractor.

b. At completion of construction, each special inspector shall prepare and sign a final report attesting that all work they inspected and all testing and test reports they reviewed were completed in accordance with the approved construction documents and that deficiencies identified were satisfactorily corrected. Submit a combined final report containing the signed final reports of all the special inspectors. Sign the combined final report attesting that all final reports of special inspectors that performed work to comply with these construction documents are contained therein, and that the Contractor has reviewed and approved all of the individual inspector's final reports.

-- End of Section --

SECTION 01 50 00

TEMPORARY CONSTRUCTION FACILITIES AND CONTROLS
08/09

PART 1 GENERAL

1.1 SUMMARY

Requirements of this Section apply to, and are a component of, each section of the specifications.

1.2 REFERENCES

The publications listed below form a part of this specification to the extent referenced. The publications are referred to within the text by the basic designation only.

AMERICAN WATER WORKS ASSOCIATION (AWWA)

AWWA C511	(2007) Standard for Reduced-Pressure Principle Backflow Prevention Assembly

FOUNDATION FOR CROSS-CONNECTION CONTROL AND HYDRAULIC RESEARCH (FCCCHR)

FCCCHR List	(continuously updated) List of Approved Backflow Prevention Assemblies
FCCCHR Manual	(10th Edition) Manual of Cross-Connection Control

NATIONAL FIRE PROTECTION ASSOCIATION (NFPA)

NFPA 241	(2013) Standard for Safeguarding Construction,Alteration, and Demolition Operations
NFPA 70	(2014; AMD 1 2013; Errata 2013; AMD 2 2013) National Electrical Code

U.S. FEDERAL AVIATION ADMINISTRATION (FAA)

FAA AC 70/7460-1	(2007; Rev K) Obstruction Marking and Lighting

U.S. FEDERAL HIGHWAY ADMINISTRATION (FHWA)

MUTCD	(2009) Manual on Uniform Traffic Control Devices

1.3 SUBMITTALS

Government approval is required for submittals with a "G" designation; submittals not having a "G" designation are for Contractor Quality Control approval. Submitted the following in accordance with Section 01 33 00 SUBMITTAL PROCEDURES:

SD-01 Preconstruction Submittals

Construction site plan; G
Traffic control plan; G

SD-03 Product Data

Backflow preventers; G

SD-06 Test Reports

Backflow Preventer Tests; G

SD-07 Certificates

Backflow Tester Certification; G

Backflow Preventers Certificate of Full Approval

1.4 CONSTRUCTION SITE PLAN

Prior to the start of work, submit a site plan showing the locations and dimensions of temporary facilities (including layouts and details, equipment and material storage area (onsite and offsite), and access and haul routes, avenues of ingress/egress to the fenced area and details of the fence installation. Identify any areas which may have to be graveled to prevent the tracking of mud. Indicate if the use of a supplemental or other staging area is desired. Show locations of safety and construction fences, site trailers, construction entrances, trash dumpsters, temporary sanitary facilities, and worker parking areas.

1.5 BACKFLOW PREVENTERS CERTIFICATE

Certificate of Full Approval from FCCCHR List, University of Southern California, attesting that the design, size and make of each backflow preventer has satisfactorily passed the complete sequence of performance testing and evaluation for the respective level of approval. Certificate of Provisional Approval will not be acceptable.

1.5.1 Backflow Tester Certificate

Prior to testing, submit to the Contracting Officer certification issued by the State or local regulatory agency attesting that the backflow tester has successfully completed a certification course sponsored by the regulatory agency. Tester must not be affiliated with any company participating in any other phase of this Contract.

1.5.2 Backflow Prevention Training Certificate

Submit a certificate recognized by the State or local authority that states the Contractor has completed at least 10 hours of training in backflow preventer installations. The certificate must be current.

PART 2 PRODUCTS

2.1 TEMPORARY SIGNAGE

2.1.1 Bulletin Board

Immediately upon beginning of work, provide a weatherproof glass-covered bulletin board not less than 36 by 48 inches in size for displaying the Equal Employment Opportunity poster, a copy of the wage decision contained in the contract, Wage Rate Information poster, and other information approved by the Contracting Officer. Locate the bulletin board at the project site in a conspicuous place easily accessible to all employees, as approved by the Contracting Officer.

2.1.2 Project and Safety Signs

The requirements for the signs, their content, and location are as specified in Section 01 58 00 PROJECT IDENTIFICATION. Erect signs within 15 days after receipt of the notice to proceed. Correct the data required by the safety sign daily, with light colored metallic or non-metallic numerals.

2.2 TEMPORARY TRAFFIC CONTROL

2.2.1 Haul Roads

At contractors expense construct access and haul roads necessary for proper prosecution of the work under this contract. Construct with suitable grades and widths; sharp curves, blind corners, and dangerous cross traffic are be avoided. Provide necessary lighting, signs, barricades, and distinctive markings for the safe movement of traffic. The method of dust control, although optional, must be adequate to ensure safe operation at all times. Location, grade, width, and alignment of construction and hauling roads are subject to approval by the Contracting Officer. Lighting must be adequate to assure full and clear visibility for full width of haul road and work areas during any night work operations.

2.2.2 Barricades

Erect and maintain temporary barricades to limit public access to hazardous areas. Whenever safe public access to paved areas such as roads, parking areas or sidewalks is prevented by construction activities or as otherwise necessary to ensure the safety of both pedestrian and vehicular traffic barricades will be required. Securely place barricades clearly visible with adequate illumination to provide sufficient visual warning of the hazard during both day and night.

2.2.3 Fencing

a. Provide fencing along the construction site at all open excavations and tunnels to control access by unauthorized people. Fencing must be installed to be able to restrain a force of at least 250 pounds against it.

b. Enclose the project work area and Contractor lay-down area with an 8 ft high chain link fence and gates with brown, UV light resistant, plastic fabric mesh netting (similar to tennis court or other screening). Remove the fence upon completion and acceptance of the work. Intent is to block (screen) public view of the construction.

c. In addition, prior to the start of work, enclose those areas at the construction site which are not within the construction fence with a temporary safety fence, including gates and warning signs, to protect the public from construction activities. The safety fence shall match the base standard color (or bright orange where it protects excavated areas), shall be made of high density polyethylene grid or approved equal or plastic fence from recovered materials containing 60-100 percent recovered content level plastic, a minimum of 42 inches high, supported and tightly secured to steel posts located on minimum 10 foot centers. Remove the fence from the work site upon completion of the contract.

2.2.4 Temporary Wiring

Provide temporary wiring in accordance with NFPA 241 and NFPA 70. Include frequent inspection of all equipment and apparatus.

2.2.5 Backflow Preventers

Reduced pressure principle type conforming to the applicable requirements AWWA C511. Provide backflow preventers complete with 150 pound flanged cast iron, mounted gate valve and strainer, 304 stainless steel or bronze, internal parts. The particular make, model/design, and size of backflow preventers to be installed must be included in the latest edition of the List of Approved Backflow Prevention Assemblies issued by the FCCCHR List and be accompanied by a Certificate of Full Approval from FCCCHR List. After installation conduct Backflow Preventer Tests and provide test reports verifying that the installation meets the FCCCHR Manual Standards.

PART 3 EXECUTION

3.1 EMPLOYEE PARKING

Contractor employees will park privately owned vehicles in an area designated by the Contracting Officer. This area will be within reasonable walking distance of the construction site. Contractor employee parking must not interfere with existing and established parking requirements of the government installation.

3.2 AVAILABILITY AND USE OF UTILITY SERVICES

3.2.1 Temporary Utilities

Provide temporary utilities required for construction. Materials may be new or used, must be adequate for the required usage, not create unsafe conditions, and not violate applicable codes and standards.

3.2.2 Payment for Utility Services

a. The Government will make all reasonably required utilities available to the Contractor from existing outlets and supplies, as specified in the contract. Unless otherwise provided in the contract, the amount of each utility service consumed will be charged to or paid for by the Contractor at prevailing rates charged to the Government or, where the utility is produced by the Government, at reasonable rates determined by the Contracting Officer. Carefully conserve any utilities furnished without charge.

b. Reasonable amounts of the following utilities will be made available to the Contractor at the prevailing rates.

Utility Services		
	Unit	FY15
Electricity	MWH	$104.50
Potable Water	KGL	$11.85
Raw Water	KGL	$1.23
Oily Waste Treatment	KGL	$38.70

c. The point at which the Government will deliver such utilities or services and the quantity available is as indicated. Pay all costs incurred in connecting, converting, and transferring the utilities to the work. Make connections, including providing backflow-preventing devices on connections to domestic water lines; providing meters; and providing transformers; and make disconnections. Under no circumstances will taps to base fire hydrants be allowed for obtaining domestic water.

3.2.3 Meters and Temporary Connections

At the Contractors expense and in a manner satisfactory to the Contracting Officer, provide and maintain necessary temporary connections, distribution lines, and meter bases required to measure the amount of each utility used for the purpose of determining charges. Notify the Contracting Officer, in writing, 5 working days before final electrical connection is desired so that a utilities contract can be established. The Government will provide a meter and make the final hot connection after inspection and approval of the Contractor's temporary wiring installation. The Contractor will not make the final electrical connection.

3.2.4 Advance Deposit

An advance deposit for utilities consisting of an estimated month's usage or a minimum of $50.00 will be required. The last monthly bills for the fiscal year will normally be offset by the deposit and adjustments will be billed or returned as appropriate. Services to be rendered for the next fiscal year, beginning 1 October, will require a new deposit. Notification of the due date for this deposit will be mailed to the Contractor prior to the end of the current fiscal year.

3.2.5 Final Meter Reading

Before completion of the work and final acceptance of the work by the Government, notify the Contracting Officer, in writing, 5 working days before termination is desired. The Government will take a final meter reading, disconnect service, and remove the meters. Then remove all the temporary distribution lines, meter bases, and associated paraphernalia. Pay all outstanding utility bills before final acceptance of the work by the Government.

3.2.6 Water

Make connections to existing facilities to provide water for construction purposes. Water used will not be furnished by the Government.

3.2.7 Sanitation

a. Provide and maintain within the construction area minimum field-type sanitary facilities approved by the Contracting Officer and periodically empty wastes into a municipal, district, or station sanitary sewage system, or remove waste to a commercial facility. Obtain approval from the system owner prior to discharge into any municipal, district, or commercial sanitary sewer system. Any penalties and / or fines associated with improper discharge will be the responsibility of the Contractor. Coordinate with the Contracting Officer and follow station regulations and procedures when discharging into the station sanitary sewer system. Maintain these conveniences at all times without nuisance. Include provisions for pest control and elimination of odors. Government toilet facilities will not be available to Contractor's personnel.

b. Provide temporary sewer and sanitation facilities that are self-contained units with both urinals and stool capabilities. Ventilate the units to control odors and fumes and empty and clean them at least once a week or more often if required by the Contracting Officer. The doors shall be self-closing. The exterior of the unit shall match the base standard color. Locate the facility behind the construction fence or out of the public view.

3.2.8 Telephone

Make arrangements and pay all costs for telephone facilities desired.

3.2.9 Obstruction Lighting of Cranes

Provide a minimum of 2 aviation red or high intensity white obstruction lights on temporary structures (including cranes) over 100 feet above ground level. Light construction and installation must comply with FAA AC 70/7460-1. Lights must be operational during periods of reduced visibility, darkness, and as directed by the Contracting Officer.

3.2.10 Fire Protection

Provide temporary fire protection equipment for the protection of personnel and property during construction. Remove debris and flammable materials daily to minimize potential hazards.

3.3 TRAFFIC PROVISIONS

3.3.1 Maintenance of Traffic

a. Conduct operations in a manner that will not close any thoroughfare or interfere in any way with traffic on railways or highways except with written permission of the Contracting Officer at least 15 calendar days prior to the proposed modification date, and provide a Traffic Control Plan detailing the proposed controls to traffic movement for approval. The plan must be in accordance with State and local regulations and the MUTCD, Part VI. Make all notifications and obtain any permits required for modification to traffic movements outside Station's jurisdiction.

Contractor may move oversized and slow-moving vehicles to the worksite provided requirements of the highway authority have been met.

b. Conduct work so as to minimize obstruction of traffic, and maintain traffic on at least half of the roadway width at all times. Obtain approval from the Contracting Officer prior to starting any activity that will obstruct traffic.

c. Provide, erect, and maintain, at contractors expense, lights, barriers, signals, passageways, detours, and other items, that may be required by the Life Safety Signage, overhead protection authority having jurisdiction.

3.3.2 Protection of Traffic

Maintain and protect traffic on all affected roads during the construction period except as otherwise specifically directed by the Contracting Officer. Measures for the protection and diversion of traffic, including the provision of watchmen and flagmen, erection of barricades, placing of lights around and in front of equipment the work, and the erection and maintenance of adequate warning, danger, and direction signs, will be as required by the State and local authorities having jurisdiction. Protect the traveling public from damage to person and property. Minimize the interference with public traffic on roads selected for hauling material to and from the site. Investigate the adequacy of existing roads and their allowable load limit. Contractor is responsible for the repair of any damage to roads caused by construction operations.

3.3.3 Rush Hour Restrictions

Do not interfere with the peak traffic flows preceding and during normal operations without notification to and approval by the Contracting Officer.

3.3.4 Dust Control

Dust control methods and procedures must be approved by the Contracting Officer. Treat dust abatement on access roads with applications of calcium chloride, water sprinklers, or similar methods or treatment.

3.4 CONTRACTOR'S TEMPORARY FACILITIES

3.4.1 Safety

Protect the integrity of any installed safety systems or personnel safety devices. If entrance into systems serving safety devices is required, the Contractor must obtain prior approval from the Contracting Officer. If it is temporarily necessary to remove or disable personnel safety devices in order to accomplish contract requirements, provide alternative means of protection prior to removing or disabling any permanently installed safety devices or equipment and obtain approval from the Contracting Officer.

3.4.2 Administrative Field Offices

Provide and maintain administrative field office facilities within the construction area at the designated site. Government office and warehouse facilities will not be available to the Contractor's personnel.

3.4.3 Storage Area

Construct a temporary 6 foot high chain link fence around trailers and materials. Include plastic strip inserts, colored green or brown, so that visibility through the fence is obstructed. Fence posts may be driven, in lieu of concrete bases, where soil conditions permit. Do not place or store Trailers, materials, or equipment outside the fenced area unless such trailers, materials, or equipment are assigned a separate and distinct storage area by the Contracting Officer away from the vicinity of the construction site but within the installation boundaries. Trailers, equipment, or materials must not be open to public view with the exception of those items which are in support of ongoing work on any given day. Do not stockpile materials outside the fence in preparation for the next day's work. Park mobile equipment, such as tractors, wheeled lifting equipment, cranes, trucks, and like equipment within the fenced area at the end of each work day.

3.4.4 Supplemental Storage Area

Upon Contractor's request, the Contracting Officer will designate another or supplemental area for the Contractor's use and storage of trailers, equipment, and materials. This area may not be in close proximity of the construction site but will be within the installation boundaries. Fencing of materials or equipment will not be required at this site; however, the Contractor is responsible for cleanliness and orderliness of the area used and for the security of any material or equipment stored in this area. Utilities will not be provided to this area by the Government.

3.4.5 Appearance of Trailers

a. Trailers utilized by the Contractor for administrative or material storage purposes must present a clean and neat exterior appearance and be in a state of good repair. Trailers which, in the opinion of the Contracting Officer, require exterior painting or maintenance will not be allowed on installation property.

b. Paint using suitable paint and maintain the temporary facilities. Failure to do so will be sufficient reason to require their removal.

3.4.6 Maintenance of Storage Area

a. Keep fencing in a state of good repair and proper alignment. Grassed or unpaved areas, which are not established roadways, will be covered with a layer of gravel as necessary to prevent rutting and the tracking of mud onto paved or established roadways, should the Contractor elect to traverse them with construction equipment or other vehicles; gravel gradation will be at the Contractor's discretion. Mow and maintain grass located within the boundaries of the construction site for the duration of the project. Grass and vegetation along fences, buildings, under trailers, and in areas not accessible to mowers will be edged or trimmed neatly.

3.4.7 New Building

In the event a new building is constructed for the temporary project field office, it will be a minimum 12 feet in width, 16 feet in length and have a minimum of 7 feet headroom. Equip the building with approved electrical wiring, at least one double convenience outlet and the required switches and fuses to provide 110-120 volt power. Provide a work table with stool,

desk with chair, two additional chairs, and one legal size file cabinet that can be locked. The building must be waterproof, supplied with a heater, have a minimum of two doors, electric lights, a telephone, a battery operated smoke detector alarm, a sufficient number of adjustable windows for adequate light and ventilation, and a supply of approved drinking water. Approved sanitary facilities must be furnished. Screen the windows and doors and provide the doors with dead bolt type locking devices or a padlock and heavy duty hasp bolted to the door. Door hinge pins will be non-removable. Arrange the windows to open and to be securely fastened from the inside. Protect glass panels in windows by bars or heavy mesh screens to prevent easy access. In warm weather, furnish air conditioning capable of maintaining the office at 50 percent relative humidity and a room temperature 20 degrees F below the outside temperature when the outside temperature is 95 degrees F. Any new building erected for a temporary field office must be maintained by the Contractor during the life of the contract and upon completion and acceptance of the work become the property of the Contractor and removed from the site. All charges for telephone service for the temporary field office will be borne by the Contractor.

3.4.8 Security Provisions

Provide adequate outside security lighting at the Contractor's temporary facilities. The Contractor will be responsible for the security of its own equipment; in addition, the Contractor will notify the appropriate law enforcement agency requesting periodic security checks of the temporary project field office.

3.4.9 Storage Size and Location

The open site available for storage must be as indicated.

3.4.10 Storage in Existing Buildings

The Contractor will not be working in existing buildings; the storage of material will not be allowed in the buildings.

3.4.11 Weather Protection of Temporary Facilities and Stored Materials

Take necessary precautions to ensure that roof openings and other critical openings in the temporary building are monitored carefully. Take immediate actions required to seal off such openings when rain or other detrimental weather is imminent, and at the end of each workday. Ensure that the openings are completely sealed off to protect materials and equipment in the building from damage.

3.4.11.1 Building and Site Storm Protection

When a warning of gale force winds is issued, take precautions to minimize danger to persons, and protect the work and nearby Government property. Precautions must include, but are not limited to, closing openings; removing loose materials, tools and equipment from exposed locations; and removing or securing scaffolding and other temporary work. Close openings in the work when storms of lesser intensity pose a threat to the work or any nearby Government property.

3.4.11.2 Hurricane Condition of Readiness

Unless directed otherwise, comply with:

a. Condition FOUR (Sustained winds of 50 knots or greater expected within 72 hours): Normal daily jobsite cleanup and good housekeeping practices. Collect and store in piles or containers scrap lumber, waste material, and rubbish for removal and disposal at the close of each work day. Maintain the construction site including storage areas, free of accumulation of debris. Stack form lumber in neat piles less than 4 feet high. Remove all debris, trash, or objects that could become missile hazards. Contact Contracting Officer for Condition Requirements or Condition of Readiness (COR) updates and completion of required actions.

b. Condition THREE (Sustained winds of 50 knots or greater expected within 48 hours): Maintain "Condition FOUR" requirements and commence securing operations necessary for "Condition ONE" which cannot be completed within 18 hours. Cease all routine activities which might interfere with securing operations. Commence securing and stow all gear and portable equipment. Make preparations for securing buildings. Review requirements pertaining to "Condition TWO" and continue action as necessary to attain "Condition THREE" readiness. Contact Contracting Officer for weather and COR updates and completion of required actions.

c. Condition TWO (Sustained winds of 50 knots or greater expected within 24 hours): Curtail or cease routine activities until securing operation is complete. Reinforce or remove form work and scaffolding. Secure machinery, tools, equipment, materials, or remove from the jobsite. Expend every effort to clear all missile hazards and loose equipment from general base areas. Contact Contracting Officer for weather and Condition of Readiness (COR) updates and completion of required actions.

d. Condition ONE. (Sustained winds of 50 knots or greater expected within 12 hours): Secure the jobsite, and leave Government premises.

3.5 GOVERNMENT FIELD OFFICE

3.5.1 Resident Engineer's Office

Provide the Government Resident Engineer with an office, approximately 200 square feet in floor area, located where directed and providing space heat, air conditioning, electric light and power, and toilet facilities consisting of one lavatory and one water closet complete with connections to water and sewer mains. Include a 4 by 8 foot plan table, 2 computer work spaces, 2 standard size office desks and chairs, and a WI-FI Hot spot device with 4GE or better with an unlimited data plan able to support up to three Internet connected devices. All utility costs, including data plans, will be the responsibility of the Contractor. At completion of the project, the office will remain the property of the Contractor and be removed from the site. Utilities will be connected and disconnected in accordance with local codes and to the satisfaction of the Contracting Officer.

3.5.2 Quality Control Manager Records and Field Office

Provide on the jobsite an office with approximately 200 square feet of useful floor area for the exclusive use of the QC Manager. Provide a weathertight structure with adequate heating and cooling, toilet facilities, lighting, ventilation, a 4 by 8 foot plan table, a standard

size office desk and chair, computer station, and working communications facilities. Provide either a 1,500 watt radiant heater and a window-mounted air conditioner rated at 9,000 Btus minimum or a window-mounted heat pump of the same minimum heating and cooling ratings. Provide a door with a cylinder lock and windows with locking hardware. Make utility connections. Locate as directed. File quality control records in the office and make available at all times to the Government. After completion of the work, remove the entire structure from the site.

3.5.3 Trailer-Type Mobile Office

The Contractor may, at its option, furnish and maintain a trailer-type mobile office acceptable to the Contracting Officer and providing as a minimum the facilities specified above. Securely anchor the trailer to the ground at all four corners to guard against movement during high winds.

3.6 PLANT COMMUNICATION

Whenever the Contractor has the individual elements of its plant so located that operation by normal voice between these elements is not satisfactory, the Contractor must install a satisfactory means of communication, such as telephone or other suitable devices and made available for use by Government personnel.

3.7 TEMPORARY PROJECT SAFETY FENCING

As soon as practicable, but not later than 15 days after the date established for commencement of work, furnish and erect temporary project safety fencing at the work site. The safety fencing must be a high visibility orange colored, high density polyethylene grid or approved equal, a minimum of 42 inches high, supported and tightly secured to steel posts located on maximum 10 foot centers, constructed at the approved location. Maintain the safety fencing during the life of the contract and, upon completion and acceptance of the work, will become the property of the Contractor and be removed from the work site.

3.8 CLEANUP

Remove construction debris, waste materials, packaging material and the like from the work site daily. Any dirt or mud which is tracked onto paved or surfaced roadways must be cleaned away. Store within the fenced area described above or at the supplemental storage area any materials resulting from demolition activities which are salvageable. Neatly stacked stored materials not in trailers, whether new or salvaged.

3.9 RESTORATION OF STORAGE AREA

Upon completion of the project remove the bulletin board, signs, barricades, haulroads, and any other temporary products from the site. After removal of trailers, materials, and equipment from within the fenced area, remove the fence that will become the property of the Contractor. Restore to the original or better condition, areas used by the Contractor for the storage of equipment or material, or other use. Gravel used to traverse grassed areas must be removed and the area restored to its original condition, including top soil and seeding as necessary.

-- End of Section --

SECTION 01 57 19.00 20

TEMPORARY ENVIRONMENTAL CONTROLS
11/11

PART 1 GENERAL

1.1 REFERENCES

The publications listed below form a part of this specification to the extent referenced. The publications are referred to within the text by the basic designation only.

U.S. ENVIRONMENTAL PROTECTION AGENCY (EPA)

EPA 530/F-93/004	(1993; Rev O; Updates I, II, IIA, IIB, and III) Test Methods for Evaluating Solid Waste (Vol IA, IB, IC, and II) (SW-846)

U.S. NATIONAL ARCHIVES AND RECORDS ADMINISTRATION (NARA)

29 CFR 1910	Occupational Safety and Health Standards
29 CFR 1910.120	Hazardous Waste Operations and Emergency Response
40 CFR 112	Oil Pollution Prevention
40 CFR 112.7	General Requirements for Spill Prevention, Control, and Countermeasure Plans
40 CFR 241	Guidelines for Disposal of Solid Waste
40 CFR 243	Guidelines for the Storage and Collection of Residential, Commercial, and Institutional Solid Waste
40 CFR 258	Subtitle D Landfill Requirements
40 CFR 260	Hazardous Waste Management System: General
40 CFR 261	Identification and Listing of Hazardous Waste
40 CFR 262	Standards Applicable to Generators of Hazardous Waste
40 CFR 263	Standards Applicable to Transporters of Hazardous Waste
40 CFR 264	Standards for Owners and Operators of Hazardous Waste Treatment, Storage, and Disposal Facilities
40 CFR 265	Interim Status Standards for Owners and Operators of Hazardous Waste Treatment, Storage, and Disposal Facilities

40 CFR 266	Standards for the Management of Specific Hazardous Wastes and Specific Types of Hazardous Waste Management Facilities
40 CFR 268	Land Disposal Restrictions
40 CFR 270	EPA Administered Permit Programs: The Hazardous Waste Permit Program
40 CFR 271	Requirements for Authorization of State Hazardous Waste Programs
40 CFR 272	Approved State Hazardous Waste Management Programs
40 CFR 273	Standards For Universal Waste Management
40 CFR 279	Standards for the Management of Used Oil
40 CFR 280	Technical Standards and Corrective Action Requirements for Owners and Operators of Underground Storage Tanks (UST)
40 CFR 300	National Oil and Hazardous Substances Pollution Contingency Plan
40 CFR 355	Emergency Planning and Notification
40 CFR 372-SUBPART D	Specific Toxic Chemical Listings
40 CFR 60	Standards of Performance for New Stationary Sources
40 CFR 63	National Emission Standards for Hazardous Air Pollutants for Source Categories
40 CFR 761	Polychlorinated Biphenyls (PCBs) Manufacturing, Processing, Distribution in Commerce, and Use Prohibitions
40 CFR 82	Protection of Stratospheric Ozone
49 CFR 171	General Information, Regulations, and Definitions
49 CFR 172	Hazardous Materials Table, Special Provisions, Hazardous Materials Communications, Emergency Response Information, and Training Requirements
49 CFR 173	Shippers - General Requirements for Shipments and Packagings
49 CFR 178	Specifications for Packagings

1.2 DEFINITIONS

1.2.1 Sediment

Soil and other debris that have eroded and have been transported by runoff water or wind.

1.2.2 Solid Waste

Garbage, refuse, debris, sludge, or other discharged material, including solid, liquid, semisolid, or contained gaseous materials resulting from domestic, industrial, commercial, mining, or agricultural operations. Types of solid waste typically generated at construction sites may include:

a. Green waste: The vegetative matter from landscaping, land clearing and grubbing, including, but not limited to, grass, bushes, scrubs, small trees and saplings, tree stumps and plant roots. Marketable trees, grasses and plants that are indicated to remain, be re-located, or be re-used are not included.

b. Surplus soil: Existing soil that is in excess of what is required for this work, including aggregates intended, but not used, for on-site mixing of concrete, mortars and paving. Contaminated soil meeting the definition of hazardous material or hazardous waste is not included.

c. Debris: Non-hazardous solid material generated during the construction, demolition, or renovation of a structure which exceeds 2.5 inch particle size that is: a manufactured object; plant or animal matter; or natural geologic material (e.g. cobbles and boulders), broken or removed concrete, masonry, and rock asphalt paving; ceramics; roofing paper and shingles. Inert materials may be reinforced with or contain ferrous wire, rods, accessories and weldments. A mixture of debris and other material such as soil or sludge is also subject to regulation as debris if the mixture is comprised primarily of debris by volume, based on visual inspection.

d. Wood: Dimension and non-dimension lumber, plywood, chipboard, hardboard. Treated and/or painted wood that meets the definition of lead contaminated or lead based contaminated paint is not included.

e. Scrap metal: Scrap and excess ferrous and non-ferrous metals such as reinforcing steel, structural shapes, pipe and wire that are recovered or collected and disposed of as scrap. Scrap metal meeting the definition of hazardous material or hazardous waste is not included.

f. Paint cans: Metal cans that are empty of paints, solvents, thinners and adhesives. If permitted by the paint can label, a thin dry film may remain in the can.

g. Recyclables: Materials, equipment and assemblies such as doors, windows, door and window frames, plumbing fixtures, glazing and mirrors that are recovered and sold as recyclable. Metal meeting the definition of lead contaminated or lead based paint contaminated may be included as recyclable if sold to a scrap metal company. Paint cans may be included as recyclable if sold to a scrap metal company.

h. Hazardous Waste: By definition, to be a hazardous waste a material must first meet the definition of a solid waste. Hazardous waste and hazardous debris are special cases of solid waste. They have

additional regulatory controls and must be handled separately. They are thus defined separately in this document.

Material not regulated as solid waste are: nuclear source or byproduct materials regulated under the Federal Atomic Energy Act of 1954 as amended; suspended or dissolved materials in domestic sewage effluent or irrigation return flows, or other regulated point source discharges; regulated air emissions; and fluids or wastes associated with natural gas or crude oil exploration or production.

1.2.3 Hazardous Debris

As defined in Solid Waste paragraph, debris that contains listed hazardous waste (either on the debris surface, or in its interstices, such as pore structure) per 40 CFR 261; or debris that exhibits a characteristic of hazardous waste per 40 CFR 261.

1.2.4 Chemical Wastes

This includes salts, acids, alkalizes, herbicides, pesticides, and organic chemicals.

1.2.5 Garbage

Refuse and scraps resulting from preparation, cooking, dispensing, and consumption of food.

1.2.6 Hazardous Waste

Any discarded material, liquid, solid, or gas, which meets the definition of hazardous material or is designated hazardous waste by the Environmental Protection Agency or State Hazardous Control Authority as defined in 40 CFR 260, 40 CFR 261, 40 CFR 262, 40 CFR 263, 40 CFR 264, 40 CFR 265, 40 CFR 266, 40 CFR 268, 40 CFR 270, 40 CFR 271, 40 CFR 272, 40 CFR 273, 40 CFR 279, and 40 CFR 280.

1.2.7 Hazardous Materials

Hazardous materials as defined in 49 CFR 171 and listed in 49 CFR 172.

Hazardous material is any material that:

a. Is regulated as a hazardous material per 49 CFR 173, or

b. Requires a Material Safety Data Sheet (MSDS) per 29 CFR 1910.120, or

c. During end use, treatment, handling, packaging, storage, transpiration, or disposal meets or has components that meet or have potential to meet the definition of a hazardous waste as defined by 40 CFR 261 Subparts A, B, C, or D.

Designation of a material by this definition, when separately regulated or controlled by other instructions or directives, does not eliminate the need for adherence to that hazard-specific guidance which takes precedence over this instruction for "control" purposes. Such material include ammunition, weapons, explosive actuated devices, propellants, pyrotechnics, chemical and biological warfare materials, medical and pharmaceutical supplies, medical waste and infectious materials, bulk fuels, radioactive materials, and other materials such as asbestos, mercury, and polychlorinated

biphenyls (PCBs). Nonetheless, the exposure may occur incident to manufacture, storage, use and demilitarization of these items.

1.2.8 Waste Hazardous Material (WHM)

Any waste material which because of its quantity, concentration, or physical, chemical, or infectious characteristics may pose a substantial hazard to human health or the environment and which has been so designated. Used oil not containing any hazardous waste, as defined above, falls under this definition.

1.2.9 Oily Waste

Those materials which are, or were, mixed with used oil and have become separated from that used oil. Oily wastes also means materials, including wastewaters, centrifuge solids, filter residues or sludges, bottom sediments, tank bottoms, and sorbents which have come into contact with and have been contaminated by, used oil and may be appropriately tested and discarded in a manner which is in compliance with other State and local requirements.

This definition includes materials such as oily rags, "kitty litter" sorbent clay and organic sorbent material. These materials may be land filled provided that:

a. It is not prohibited in other State regulations or local ordinances

b. The amount generated is "de minimus" (a small amount)

c. It is the result of minor leaks or spills resulting from normal process operations

d. All free-flowing oil has been removed to the practical extent possible

Large quantities of this material, generated as a result of a major spill or in lieu of proper maintenance of the processing equipment, are a solid waste. As a solid waste, a hazardous waste determination must be performed prior to disposal. As this can be an expensive process, it is recommended that this type of waste be minimized through good housekeeping practices and employee education.

1.2.10 Regulated Waste

Those solid waste that have specific additional Federal, state, or local controls for handling, storage, or disposal.

1.2.11 Class I and II Ozone Depleting Substance (ODS)

Class I ODS is defined in Section 602(a) of The Clean Air Act and includes the following chemicals:

chlorofluorocarbon-11 (CFC-11)
chlorofluorocarbon-12 (CFC-12)
chlorofluorocarbon-13 (CFC-13)

chlorofluorocarbon-111 (CFC-111)
chlorofluorocarbon-112 (CFC-112)
chlorofluorocarbon-113 (CFC-113)
chlorofluorocarbon-114 (CFC-114)
chlorofluorocarbon-115 (CFC-115)
chlorofluorocarbon-211 (CFC-211)
chlorofluorocarbon-212 (CFC-212)
chlorofluorocarbon-213 (CFC-213)
chlorofluorocarbon-214 (CFC-214)
chlorofluorocarbon-215 (CFC-215)
chlorofluorocarbon-216 (CFC-216)
chlorofluorocarbon-217 (CFC-217)
chlorofluorocarbon-500 (CFC-500)
chlorofluorocarbon-502 (CFC-502)
chlorofluorocarbon-503 (CFC-503)
halon-1211
halon-1301
halon-2402
carbon tetrachloride
methyl bromide
methyl chloroform

Class II ODS is defined in Section 602(s) of The Clean Air Act and includes the following chemicals:

hydrochlorofluorocarbon-21 (HCFC-21)
hydrochlorofluorocarbon-22 (HCFC-22)
hydrochlorofluorocarbon-31 (HCFC-31)
hydrochlorofluorocarbon-121 (HCFC-121)

hydrochlorofluorocarbon-122 (HCFC-122)
hydrochlorofluorocarbon-123 (HCFC-123)
hydrochlorofluorocarbon-124 (HCFC-124)
hydrochlorofluorocarbon-131 (HCFC-131)
hydrochlorofluorocarbon-132 (HCFC-132)
hydrochlorofluorocarbon-133 (HCFC-133)
hydrochlorofluorocarbon-141 (HCFC-141)
hydrochlorofluorocarbon-142 (HCFC-142)
hydrochlorofluorocarbon-221 (HCFC-221)
hydrochlorofluorocarbon-222 (HCFC-222)
hydrochlorofluorocarbon-223 (HCFC-223)
hydrochlorofluorocarbon-224 (HCFC-224)
hydrochlorofluorocarbon-225 (HCFC-225)
hydrochlorofluorocarbon-226 (HCFC-226)
hydrochlorofluorocarbon-231 (HCFC-231)
hydrochlorofluorocarbon-232 (HCFC-232)
hydrochlorofluorocarbon-233 (HCFC-233)
hydrochlorofluorocarbon-234 (HCFC-234)
hydrochlorofluorocarbon-235 (HCFC-235)
hydrochlorofluorocarbon-251 (HCFC-251)
hydrochlorofluorocarbon-252 (HCFC-252)
hydrochlorofluorocarbon-253 (HCFC-253)
hydrochlorofluorocarbon-261 (HCFC-261)
hydrochlorofluorocarbon-262 (HCFC-262)
hydrochlorofluorocarbon-271 (HCFC-271)

1.2.12 Universal Waste

The universal waste regulations streamline collection requirements for certain hazardous wastes in the following categories: batteries, pesticides, mercury-containing equipment (e.g., thermostats) and lamps

(e.g., fluorescent bulbs). The rule is designed to reduce hazardous waste in the municipal solid waste (MSW) stream by making it easier for universal waste handlers to collect these items and send them for recycling or proper disposal. These regulations can be found at 40 CFR 273.

1.3 SUBMITTALS

Government approval is required for submittals with a "G" designation; submittals not having a "G" designation are for Contractor Quality Control approval. When used, a designation following the "G" designation identifies the office that will review the submittal for the Government. The following shall be submitted in accordance with Section 01 33 00 SUBMITTAL PROCEDURES:

SD-01 Preconstruction Submittals

Preconstruction Survey; G

Solid Waste Management Plan and Permit; G

Regulatory Notifications; G

Environmental Protection Plan; G

Storm Water Pollution Prevention Plan; G

Storm Water Notice of Intent; G

Dirt and Dust Control Plan

Contractor Hazardous Material Inventory Log; G

SD-06 Test Reports

Laboratory Analysis

Disposal Requirements

Erosion and Sediment Control Inspection Reports

Storm Water Inspection Reports for General Permit

Solid Waste Management Report; G

SD-07 Certificates

Contractor 40 CFR employee training records; G

ECATTS certificate of completion

SD-11 Closeout Submittals

Some of the records listed below are also required as part of other submittals. For the "Records" submittal, maintain on-site a separate three-ring Environmental Records binder and submit at the completion of the project. Make separate parts to the binder corresponding to each of the applicable sub items listed below.

Storm Water Pollution Prevention Plan compliance notebook; G

Waste Determination Documentation

Disposal Documentation for Hazardous and Regulated Waste

Contractor 40 CFR Employee Training Records

Solid Waste Management Permit

Solid Waste Management Report

Contractor Hazardous Material Inventory Log; G

Hazardous Waste/Debris Management

Regulatory Notifications

1.4 ENVIRONMENTAL PROTECTION REQUIREMENTS

Provide and maintain, during the life of the contract, environmental protection as defined. Plan for and provide environmental protective measures to control pollution that develops during normal construction practice. Plan for and provide environmental protective measures required to correct conditions that develop during the construction of permanent or temporary environmental features associated with the project. Comply with Federal, State, and local regulations pertaining to the environment, including water, air, solid waste, hazardous waste and substances, oily substances, and noise pollution.

The Contractor may be required to promptly conduct tests and procedures for the purpose of assessing whether construction operations are in compliance with Applicable Environmental Laws. Analytical work shall be done by qualified laboratories; and where required by law, the laboratories shall be certified.

1.4.1 Environmental Compliance Assessment Training and Tracking System (ECATTS)

The QC Manager is responsible for environmental compliance on projects unless an Environmental Manager is named. The QC Manager (and alternative QC Manager) or Environmental Manager must complete ECATTS training prior to starting respective portions of on-site work under this contract. If personnel changes occur for any of these positions after starting work, replacement personnel must complete ECATTS training within 14 days of assignment to the project

Submit an ECATTS certificate of completion for personnel who have completed the required "Environmental Compliance Assessment Training and Tracking System (ECATTS)" training. This training is web-based and can be accessed from any computer with Internet access using the following instructions.

Register for NAVFAC Environmental Compliance Training and Tracking System, by logging on to http://navfac.ecatts.com/. Obtain the password for registration from the Contracting Officer.

This training has been structured to allow contractor personnel to receive credit under this contract and also to carry forward credit to future contracts. Contractors shall ensure that the QC Manager (and alternate QC Manager) or Environmental Manager review their training plans for new

modules or updated training requirements prior to beginning work. Some training modules are tailored for specific State regulatory requirements; therefore, Contractors working in multiple states will be requires to re-take modules tailored to the state where the contract work is being performed.

ECATTS is available for use by all contractor and subcontractor personnel associated with this project. These other personnel are encouraged (but not required) to take the training and may do so at their discretion.

1.4.2 Conformance with the Environmental Management System

Perform work under this contract consistent with the policy and objectives identified in the installation's Environmental Management System (EMS). Perform work in a manner that conforms to objectives and targets, environmental programs and operational controls identified by the EMS. Provide monitoring and measurement information as necessary to address environmental performance relative to environmental, energy, and transportation management goals. In the event an EMS nonconformance or environmental noncompliance associated with the contracted services, tasks, or actions occurs, take corrective and/or preventative actions. In addition, ensure that employees are aware of their roles and responsibilities under the EMS and how these EMS roles and responsibilities affect work performed under the contract.

Ensure that employees receive applicable environmental and occupational health and safety training, and keep up to date on regulatory required specific training for the type of work to be conducted onsite. All on-site Contractor personnel, and their subcontractor personnel, performing tasks that have the potential to cause a significant environmental impact shall be competent on the basis of appropriate education, training or experience. Upon contract award, the Contracting Officer's Representative will notify the installation's EMS coordinator to arrange EMS training. The installation's EMS coordinator will identify training needs associated with environmental aspects and the EMS, and arrange training or take other action to meet these needs. Provide training documentation to the Contracting Officer. The EMS coordinator must retain associated records.

1.5 QUALITY ASSURANCE

1.5.1 Preconstruction Survey

Perform a Preconstruction Survey of the project site with the Contracting Officer, and take photographs showing existing environmental conditions in and adjacent to the site. Submit a report for the record.

1.5.2 Regulatory Notifications

The Contractor is responsible for all regulatory notification requirements in accordance with Federal, State and local regulations. In cases where the Navy must also provide public notification (such as stormwater permitting), coordinate with the Contracting Officer. Submit copies of all regulatory notifications to the Contracting Officer prior to commencement of work activities. Typically, regulatory notifications must be provided for the following (this listing is not all inclusive): demolition, renovation, NPDES defined site work, remediation of controlled substances (asbestos, hazardous waste, lead paint).

1.5.3 Environmental Brief

Attend an environmental brief to be included in the preconstruction meeting. Provide the following information: types, quantities, and use of hazardous materials that will be brought onto the activity; types and quantities of wastes/wastewater that may be generated during the contract. Discuss the results of the Preconstruction Survey at this time.

Prior to initiating any work on site, meet with the Contracting Officer and activity environmental staff to discuss the proposed Environmental Protection Plan. Develop a mutual understanding relative to the details of environmental protection, including measures for protecting natural resources, required reports, required permits, permit requirements, and other measures to be taken.

1.5.4 Environmental Manager

Appoint in writing an Environmental Manager for the project site. The Environmental Manager will be directly responsible for coordinating contractor compliance with Federal, State, local, and station requirements. The Environmental Manager will ensure compliance with Hazardous Waste Program requirements (including hazardous waste handling, storage, manifesting, and disposal); implement the Environmental Protection Plan; ensure that all environmental permits are obtained, maintained, and closed out; ensure compliance with Storm Water Program Management requirements; ensure compliance with Hazardous Materials (storage, handling, and reporting) requirements; and coordinate any remediation of regulated substances (lead, asbestos, PCB transformers). This can be a collateral position; however the person in this position must be trained to adequately accomplish the following duties: ensure waste segregation and storage compatibility requirements are met; inspect and manage Satellite Accumulation areas; ensure only authorized personnel add wastes to containers; ensure all Contractor personnel are trained in 40 CFR requirements in accordance with their position requirements; coordinate removal of waste containers; and maintain the Environmental Records binder and required documentation, including environmental permits compliance and close-out.

1.5.5 Contractor 40 CFR Employee Training Records

Prepare and maintain employee training records throughout the term of the contract meeting applicable 40 CFR requirements. Submit these training records to the Contracting Officer at the conclusion of the project, unless otherwise directed.

1.6 ENVIRONMENTAL PROTECTION PLAN (EPP)

Prior to initiating any work on site, meet with the Contracting Officer to discuss the proposed Environmental Protection Plan and develop a mutual understanding relative to the details of environmental protection, including measures for protecting natural resources, required reports, and other measures to be taken. The Environmental Protection Plan must incorporate construction related objectives and targets from the installation's Environmental Management System. Submit the Environmental Protection Plan in the following format and include the elements specified below.

a. Description of the Environmental Protection Plan

(1) General overview and purpose

(a) A brief description of each specific plan required by environmental permit or elsewhere in this contract.

(b) The duties and level of authority assigned to the person(s) on the job site that oversee environmental compliance.

(c) A copy of any standard or project specific operating procedures that will be used to effectively manage and protect the environment on the project site.

(d) Communication and training procedures that will be used to convey environmental management requirements to contractor employees and subcontractors.

(e) Emergency contact information contact information (office phone number, cell phone number, and e-mail address).

(2) General site information

(3) A letter signed by an officer of the firm appointing the Environmental Manager and stating that he/she is responsible for managing and implementing the Environmental Program as described in this contract. Include in this letter the Environmental Manager's authority to direct the removal and replacement of non-conforming work.

b. Management of Natural Resources

(1) Land resources

(2) Tree protection

(3) Replacement of damaged landscape features

(4) Temporary construction

(5) Stream crossings

(6) Fish and wildlife resources

(7) Wetland areas

c. Protection of Historical and Archaeological Resources

(1) Objectives

(2) Methods

d. Storm Water Management and Control

(1) Ground cover

(2) Erodible soils

(3) Temporary measures

(a) Mechanical retardation and control of runoff

(b) Vegetation and mulch

(4) Effective selection, implementation and maintenance of Best Management Practices (BMPs).

e. Protection of the Environment from Waste Derived from Contractor Operations

(1) Control and disposal of solid and sanitary waste. If Section 01 74 19 CONSTRUCTION AND DEMOLITION WASTE MANAGEMENT is included in the contract, submit the plan required by that section as part of the Environmental Protection Plan.

(2) Control and disposal of hazardous waste (Hazardous Waste Management Section)

This item will consist of the management procedures for all hazardous waste to be generated. The elements of those procedures will coincide with the Activity Hazardous Waste Management Plan. A copy of the Activity Hazardous Waste Management Plan will be provided by the Contracting Officer. As a minimum, include the following:

(a) Procedures to be employed to ensure a written waste determination is made for appropriate wastes which are to be generated, (including creosote contaminated wood);

(b) Sampling/analysis plan;

(c) Methods of hazardous waste accumulation/storage (i.e., in tanks and/or containers);

(d) Management procedures for storage, labeling, transportation, and disposal of waste (treatment of waste is not allowed unless specifically noted);

(e) Management procedures and regulatory documentation ensuring disposal of hazardous waste complies with Land Disposal Restrictions (40 CFR 268);

(f) Management procedures for recyclable hazardous materials such as lead-acid batteries, used oil, and the like;

(g) Used oil management procedures in accordance with 40 CFR 279;

(h) Pollution prevention\hazardous waste minimization procedures;

(i) Plans for the disposal of hazardous waste by permitted facilities;

(j) Procedures to be employed to ensure all required employee training records are maintained.

f. Prevention of Releases to the Environment

(1) Procedures to prevent releases to the environment

(2) Notifications in the event of a release to the environment

g. Regulatory Notification and Permits

List what notifications and permit applications must be made. Some permits require up to 90 days to obtain. Demonstrate that those permits have been obtained or applied for by including copies of all applicable, environmental permits. The Plan will not be approved until all permits have been obtained.

h. Clean Air Act Compliance

(1) Identify air pollution generating equipment or processes that may require federal, state, or local permits under the clean air act.

(2) Identify portable and stationary internal combustion engines (ICE's) that will be supplied, utilized or serviced. Address compliance with 40 CFR 60 Subpart IIII, 40 CFR 63 Subpart ZZZZ, and local regulations as applicable. At minimum, include the make, model, serial number, manufacture date, size (engine bhp), and EPA emission certification status of each engine.

(3) Identify management practices to ensure that HVAC work involving refrigerants complies with 40 CFR 82 requirements.

(4) Identify planned air pollution generating processes and management control measures (including but not limited to spray painting, abrasive blasting, demolition, material handling, fugitive dust, and fugitive emissions)

1.6.1 Environmental Protection Plan Review

Within thirty days after the Contract award date, submit the proposed Environmental Protection Plan to the Installation Environmental Division for review and approval. Commencement of work will not begin until the environmental protection plan has been approved.

1.6.2 Licenses and Permits

Obtain licenses and permits pursuant to the "Permits and Responsibilities" FAR Clause 52.236-7.

Where required by the State regulatory authority, the inspections and certifications will be provided through the services of a Professional Engineer (PE), registered in the State where the work is being performed. Where a PE is not required, the individual must be otherwise qualified by other current State licensure, specific training and prior experience (minimum 5 years). As a part of the quality control plan, which is required to be submitted for approval by the quality control section, provide a sub item containing the name, appropriate professional registration or licence number, address, and telephone number of the professionals or other qualified persons who will be performing the inspections and certifications for each permit.

PART 2 PRODUCTS

Not Used

PART 3 EXECUTION

3.1 PROTECTION OF NATURAL RESOURCES

Preserve the natural resources within the project boundaries and outside the limits of permanent work. Restore to an equivalent or improved condition upon completion of work. Confine construction activities to within the limits of the work indicated or specified. If the work is near streams, lakes, or other waterways, conform to the national permitting requirements of the Clean Water Act.

Do not disturb fish and wildlife. Do not alter water flows or otherwise significantly disturb the native habitat adjacent to the project and critical to the survival of fish and wildlife, except as indicated or specified.

Except in areas to be cleared, do not remove, cut, deface, injure, or destroy trees or shrubs without the Contracting Officer's permission. Do not fasten or attach ropes, cables, or guys to existing nearby trees for anchorages unless authorized by the Contracting Officer. Where such use of attached ropes, cables, or guys is authorized, the Contractor will be responsible for any resultant damage.

Protect existing trees which are to remain and which may be injured, bruised, defaced, or otherwise damaged by construction operations. Remove displaced rocks from uncleared areas. By approved excavation, remove trees with 30 percent or more of their root systems destroyed. Remove trees and other landscape features scarred or damaged by equipment operations, and replace with equivalent, undamaged trees and landscape features. Obtain Contracting Officer's approval before replacement.

The Contracting Officer's approval is required before any equipment will be permitted to ford live streams. In areas where frequent crossings are required, install temporary culverts or bridges. Obtain Contracting Officer's approval prior to installation. Remove temporary culverts or bridges upon completion of work, and repair the area to its original condition unless otherwise required by the Contracting Officer.

3.1.1 Erosion and Sediment Control Measures

3.1.1.1 Burnoff

Burnoff of the ground cover is not permitted.

3.1.1.2 Protection of Erodible Soils

Immediately finish the earthwork brought to a final grade, as indicated or specified. Immediately protect the side slopes and back slopes upon completion of rough grading. Plan and conduct earthwork to minimize the duration of exposure of unprotected soils.

3.1.1.3 Temporary Protection of Erodible Soils

Use the following methods to prevent erosion and control sedimentation:

a. Mechanical Retardation and Control of Runoff

   Mechanically retard and control the rate of runoff from the construction site. This includes construction of diversion ditches,

benches, berms, and use of silt fences and straw bales to retard and divert runoff to protected drainage courses.

b. Sediment Basins

(1) If sediment basin is deemed necessary, trap sediment in temporary sediment basins. Select a basin size to accommodate the runoff of a local 25-year storm. Pump dry and remove the accumulated sediment, after each storm. Use a paved weir or vertical overflow pipe for overflow. Remove collected sediment from the site. Institute effluent quality monitoring programs.

(2) Install, inspect, and maintain best management practices (BMPs) as required by the general permit. Prepare BMP Inspection Reports as required by the general permit. If required by the permit, include those inspection reports.

c. Vegetation and Mulch

(1) Provide temporary protection on sides and back slopes as soon as rough grading is completed or sufficient soil is exposed to require erosion protection. Protect slopes by accelerated growth of permanent vegetation, temporary vegetation, mulching, or netting. Stabilize slopes by hydroseeding, anchoring mulch in place, covering with anchored netting, sodding, or such combination of these and other methods necessary for effective erosion control.

(2) Seeding: Provide new seeding where ground is disturbed. Include topsoil or nutriment during the seeding operation necessary to establish or reestablish a suitable stand of grass.

3.1.2 Erosion and Sediment Control Inspection Reports

Submit "Erosion and Sediment Control Inspection Reports" (E&S) (form provided at the pre-construction conference) and Storm Water Inspection Reports for General Permit for General Permit to the Contracting Officer once every 7 calendar days and within 24 hours of a storm event that produces 0.5 inch or more of rain.

Note erosion control inspection reports may be compiled as part of a stormwater pollution prevention plan inspection reports if applicable.

3.1.2.1 Storm Water Notice of Intent and Storm Water Pollution Prevention Plan

The Contractor will prepare the Storm Water Pollution Prevention Plan (SWPPP) which must meet the requirements of the Virginia general permit for storm water discharges from construction sites. The Contractor will submit the SWPPP, Registration Statement, and appropriate permit fees, via the Contracting Officer and Water Program Manager, to the appropriate State agency for approval, a minimum of 14 calendar days prior to the start of any land disturbing activities. Maintain an approved copy of the SWPPP at the construction on-site office, and continually update as regulations require, reflecting current site conditions.

Coverage under this permit requires the contractor to prepare and maintain a Storm Water Pollution Prevention Plan (SWPPP), and file a Notice of Termination once construction is complete and the site is stabilized with a

final sustainable cover.

Under the terms and conditions of the permit, the Contractor may be required to install, inspect, maintain best management practices (BMPs), and submit stormwater BMP inspection reports and stormwater pollution prevention plan inspection reports. Ensure construction operations and management are constantly in compliance with the terms and conditions of the general permit for storm water discharges from construction activities.

a. The SWPPP shall:

(1) Identify potential sources of pollution which may be reasonably expected to affect the quality of storm water discharge from the site.

(2) Describe and ensure implementation of practices which will be used to reduce the pollutants in storm water discharge from the site.

(3) Ensure compliance with terms of the Virginia general permit for storm water discharge.

(4) Select applicable best management practices from the Virginia Administrative Code VAC 25-840 for Erosion & Sediment Control Regulations.

(5) Include a completed copy of the Registration Statement, BMP Inspection Report Template and Notice of Termination except for the effective date.

3.1.2.2 Storm Water Pollution Prevention Plan Compliance Notebook

Create and maintain a three binder of documents that demonstrate compliance with the Stormwater Construction Activity permit. The binder shall include a copy of the permit Registration Statement, proof of permit fee payment, SWPPP and SWPPP update amendments, inspection reports, copies of correspondence with the Virginia DEQ and a copy of the permit Notice of Termination. At the completion of the project the folder shall become the property of the Government. Provide the compliance notebook to Contracting Officer. Provide an advance copy of the Registration Statement to the Contracting Officer, and water Program Manager prior to sending the form to the permitting agency.

3.1.3 Stormwater Drainage and Construction Dewatering

There will be no discharge of excavation ground water to the sanitary sewer, storm drains, or to the river without prior specific authorization of the Environmental Division in writing. Discharge of hazardous substances will not be permitted under any circumstances.

Construction site runoff will be prevented from entering any storm drain or the river directly by the use of straw bales or other method suitable to the Environmental Division. Contractor will provide erosion protection of the surrounding soils.

Construction Dewatering shall not be discharged to the sanitary sewer. If the construction dewatering is noted or suspected of being contaminated, it may only be released to the storm drain system if the discharge is specifically permitted. Authorization for any contaminated groundwater release shall be obtained in advance from the base Environmental Officer.

Discharge of hazardous substances will not be permitted under any circumstances.

3.2 HISTORICAL AND ARCHAEOLOGICAL RESOURCES

Carefully protect in-place and report immediately to the Contracting Officer historical and archaeological items or human skeletal remains discovered in the course of work. Upon discovery, notify the Contracting Officer. Stop work in the immediate area of the discovery until directed by the Contracting Officer to resume work. The Government retains ownership and control over historical and archaeological resources.

3.3 SOLID WASTE MANAGEMENT PLAN and PERMIT

Provide to the contracting officer written notification of the quantity of solid waste/debris that is anticipated to be generated by construction. Include in the report the locations where various types of waste will be disposed or recycled. Include letters of acceptance or as applicable, submit one copy of a State and local Solid Waste Management Permit or license showing such agency's approval of the disposal plan before transporting wastes off Government property.

3.3.1 Solid Waste Management Report

Monthly, submit a solid waste disposal report to the Contracting Officer. For each waste, the report will state the classification (using the definitions provided in this section), amount, location, and name of the business receiving the solid waste.

Include copies of the waste handling facilities' weight tickets, receipts, bills of sale, and other sales documentation. In lieu of sales documentation, the Contractor may submit a statement indicating the disposal location for the solid waste which is signed by an officer of the Contractor firm authorized to legally obligate or bind the firm. The sales documentation or Contractor certification will include the receiver's tax identification number and business, EPA or State registration number, along with the receiver's delivery and business addresses and telephone numbers. For each solid waste retained by the Contractor for his own use, the Contractor will submit on the solid waste disposal report the information previously described in this paragraph. Prices paid or received will not be reported to the Contracting Officer unless required by other provisions or specifications of this Contract or public law.

3.3.2 Control and Management of Solid Wastes

Pick up solid wastes, and place in covered containers which are regularly emptied. Do not prepare or cook food on the project site. Prevent contamination of the site or other areas when handling and disposing of wastes. At project completion, leave the areas clean. Recycling is encouraged and can be coordinated with the Contracting Officer and the activity recycling coordinator. Remove all solid waste (including non-hazardous debris) from Government property and dispose off-site at an approved landfill. Solid waste disposal off-site must comply with most stringent local, State, and Federal requirements including 40 CFR 241, 40 CFR 243, and 40 CFR 258.

Manage spent hazardous material used in construction, including but not limited to, aerosol cans, waste paint, cleaning solvents, contaminated brushes, and used rags, as per environmental law.

3.3.2.1 Disposal Documentation for Hazardous and Regulated Waste

Manifest, pack, ship and dispose of hazardous or toxic waste and universal waste that is generated as a result of construction in accordance with the generating facilities generator status under the Recourse Conservation and Recovery Act. Contact the Contracting Officer for the facility RCRA identification number that is to be used on each manifest.

Submit a copy of the applicable EPA and or State permit(s), manifest(s), or license(s) for transportation, treatment, storage, and disposal of hazardous and regulated waste by permitted facilities. Hazardous or toxic waste manifest must be reviewed, signed, and approved by the Navy before the Contractor may ship waste. To obtain specific disposal instructions coordinate with the Activity Environmental office.

3.3.2.2 Dumpsters

Equip dumpsters with a secure cover and paint the standard base color. Keep cover closed at all times, except when being loaded with trash and debris. Locate dumpsters behind the construction fence or out of the public view. Empty site dumpsters at least once a week. or as needed to keep the site free of debris and trash. If necessary, provide 55 gallon trash containers painted the darker base color to collect debris in the construction site area. Locate the trash containers behind the construction fence or out of the public view. Empty trash containers at least once a day. For large demolitions, large dumpsters without lids are acceptable but should not have debris higher than the sides before emptying.

3.4 WASTE DETERMINATION DOCUMENTATION

Complete a Waste Determination form (provided at the pre-construction conference) for all contractor derived wastes to be generated. Base the waste determination upon either a constituent listing from the manufacturer used in conjunction with consideration of the process by which the waste was generated, EPA approved analytical data, or laboratory analysis (Material Safety Data Sheets (MSDS) by themselves are not adequate). Attach all support documentation to the Waste Determination form. As a minimum, a Waste Determination form must be provided for the following wastes (this listing is not all inclusive): oil and latex based painting and caulking products, solvents, adhesives, aerosols, petroleum products, and all containers of the original materials.

3.5 POLLUTION PREVENTION/HAZARDOUS WASTE MINIMIZATION

Minimize the use of hazardous materials and the generation of hazardous waste. Include procedures for pollution prevention/ hazardous waste minimization in the Hazardous Waste Management Section of the Environmental Protection Plan. Consult with the activity Environmental Office for suggestions and to obtain a copy of the installation's pollution prevention/hazardous waste minimization plan for reference material when preparing this part of the plan. If no written plan exists, obtain information by contacting the Contracting Officer. Describe the types of the hazardous materials expected to be used in the construction when requesting information.

3.6 WHM/HW MATERIALS PROHIBITION

No waste hazardous material or hazardous waste shall be disposed of on

government property. No hazardous material shall be brought onto government property that does not directly relate to requirements for the performance of this contract. The government is not responsible for disposal of Contractor's waste material brought on the job site and not required in the performance of this contract. The intent of this provision is to dispose of that waste identified as waste hazardous material/hazardous waste as defined herein that was generated as part of this contract and existed within the boundary of the Contract limits and not brought in from offsite by the Contractor. Incidental materials used to support the contract including, but not limited to aerosol cans, waste paint, cleaning solvents, contaminated brushes, rags, clothing, etc. are the responsibility of the Contractor. The list is illustrative rather than inclusive. The Contractor is not authorized to discharge any materials to sanitary sewer, storm drain, or to the river or conduct waste treatment or disposal on government property without written approval of the Contracting Officer.

3.7 HAZARDOUS MATERIAL MANAGEMENT

Include hazardous material control procedures in the Safety Plan. Address procedures and proper handling of hazardous materials, including the appropriate transportation requirements. No hazardous material shall be brought onto government property that does not directly relate to requirements for the performance of this contract. Submit a MSDS and estimated quantities to be used for each hazardous material to the Contracting Officer prior to bringing the material on base. Typical materials requiring MSDS and quantity reporting include, but are not limited to, oil and latex based painting and caulking products, solvents, adhesives, aerosol, and petroleum products. Ensure that hazardous materials are utilized in a manner that will minimize the amount of hazardous waste that is generated. Ensure that all containers of hazardous materials have NFPA labels or their equivalent. Certify that all hazardous materials removed from the site are hazardous materials and do not meet the definition of hazardous waste per 40 CFR 261.

3.7.1 Contractor Hazardous Material Inventory Log

Submit the "Contractor Hazardous Material Inventory Log"(found at: http://www.wbdg.org/ccb/NAVGRAPH/graphtoc.pdf), which provides information required by (EPCRA Sections 312 and 313) along with corresponding Material Safety Data Sheets (MSDS), to the Contracting Officer at the start and at the end of construction (30 days from final acceptance), and update no later than January 31 of each calendar year during the life of the contract. Keep copies of the MSDS for hazardous materials on site at all times. At the end of the project, provide the Contracting Officer with copies of all of these MSDS, and the maximum quantity of each material that was present at the site at any one time, the dates the material was present, the amount of each material that was used during the project, and how the material was used.

Documentation for any spills/releases, environmental reports or off-site transfers may be requested by the Contracting Officer.

3.8 PETROLEUM PRODUCTS AND REFUELING

Conduct the fueling and lubricating of equipment and motor vehicles in a manner that protects against spills and evaporation. Manage all used oil generated on site in accordance with 40 CFR 279. Determine if any used oil generated while on-site exhibits a characteristic of hazardous waste. Used

oil containing 1000 parts per million of solvents will be considered a hazardous waste and disposed of at Contractor's expense. Used oil mixed with a hazardous waste will also be considered a hazardous waste.

3.8.1 Oily and Hazardous Substances

Prevent oil or hazardous substances from entering the ground, drainage areas, or navigable waters. In accordance with 40 CFR 112, surround all temporary fuel oil or petroleum storage tanks with a temporary berm or containment of sufficient size and strength to contain the contents of the tanks, plus 10 percent freeboard for precipitation. The berm will be impervious to oil for 72 hours and be constructed so that any discharge will not permeate, drain, infiltrate, or otherwise escape before cleanup occurs. Provide general secondary containment for oil transfer operations as required by 40 CFR 112.7.

3.8.2 Inadvertent Discovery of Petroleum Contaminated Soil or Hazardous Wastes

If petroleum contaminated soil or suspected hazardous waste is found during construction that was not identified in the contract documents, the contractor shall immediately notify the contracting officer. The contractor shall not disturb this material until authorized by the contracting officer.

3.9 FUEL TANKS

Petroleum products and lubricants required to sustain up to 30 days of construction activity may be kept on site. Storage and refilling practices shall comply with 40 CFR Part 112. Secondary containment shall be provided and be no less than 110 percent of the tank volume plus five inches of free-board. If a secondary berm is used for containment then the berm shall be impervious to oil for 72 hours and be constructed so that any discharge will not permeate, drain, infiltrate, or otherwise escape before cleanup occurs. Drips pans are required and the tanks must be covered during inclement weather.

3.10 RELEASES/SPILLS OF OIL AND HAZARDOUS SUBSTANCES

Exercise due diligence to prevent, contain, and respond to spills of hazardous material, hazardous substances, hazardous waste, sewage, regulated gas, petroleum, lubrication oil, and other substances regulated by environmental law. Maintain spill cleanup equipment and materials at the work site. In the event of a spill, take prompt, effective action to stop, contain, curtail, or otherwise limit the amount, duration, and severity of the spill/release. In the event of any releases of oil and hazardous substances, chemicals, or gases; immediately (within 15 minutes) notify the Base or Activity Fire Department, the activity's Command Duty Officer, and the Contracting Officer. If the contractor's response is inadequate, the Navy may respond. If this should occur, the contractor will be required to reimburse the government for spill response assistance and analysis.

The Contractor is responsible for verbal and written notifications as required by the federal 40 CFR 355, State, local regulations and Navy Instructions. Spill response will be in accordance with 40 CFR 300 and applicable State and local regulations. Contain and clean up these spills without cost to the Government. If Government assistance is requested or required, the Contractor will reimburse the Government for such

assistance. Provide copies of the written notification and documentation that a verbal notification was made within 20 days.

Maintain spill cleanup equipment and materials at the work site. Clean up all hazardous and non-hazardous (WHM) waste spills. The Contractor shall reimburse the government for all material, equipment, and clothing generated during any spill cleanup. The Contractor shall reimburse the government for all costs incurred including sample analysis materials, equipment, and labor if the government must initiate its own spill cleanup procedures, for Contractor responsible spills, when:

a. The Contractor has not begun spill cleanup procedure within one hour of spill discovery/occurrence, or

b. If, in the government's judgment, the Contractor's spill cleanup is not adequately abating life threatening situation and/or is a threat to any body of water or environmentally sensitive areas.

3.11 CONTROL AND MANAGEMENT OF ASBESTOS CONTAINING MATERIAL (ACM)

Items, components, or materials disturbed by or included in work under this contract do involve asbestos. Other materials in the general area around where work will be performed may contain asbestos. All thermal insulation, in all work areas, should be considered to be asbestos unless positively identified by conspicuous tags or previous laboratory analysis certifying them as asbestos free.

Inadvertent discovery of non-disclosed asbestos that will result in an abatement action requires a change in scope before proceeding. Upon discovery of asbestos containing material not identified in the contract documents, the Contractor shall immediately stop all work that would generate further damage to the material, evacuate the asbestos exposed area, and notify the Contracting Officer for resolution of the situation prior to resuming normal work activities in the affected area. Do not remove or perform work on any asbestos containing materials without the prior approval of the Contracting Officer. Do not engage in any activity, which would remove or damage such materials or cause the generation of fibers from such materials.

Manage and dispose of asbestos containing waste in accordance with applicable environmental law. Asbestos containing waste shall be manifested and the manifest provided to the Contracting Officer.

3.12 CONTROL AND MANAGEMENT OF HAZARDOUS WASTES

3.12.1 Facility Hazardous Waste Generator Status

DFSP Craney Island is designated as a Conditionally Exempt-Small Quantity Generator. All work conducted within the boundaries of this activity must meet the regulatory requirements of this generator designation. Comply with all provisions of Federal, State and local regulatory requirements applicable to this generator status regarding training and storage, handling, and disposal of all construction derived wastes.

3.12.2 Hazardous Waste/Debris Management

Identify all construction activities which will generate hazardous waste/debris. Provide a documented waste determination for all resultant waste streams. Hazardous waste/debris will be identified, labeled,

handled, stored, and disposed of in accordance with all Federal, State, and local regulations including 40 CFR 261, 40 CFR 262, 40 CFR 263, 40 CFR 264, 40 CFR 265, 40 CFR 266, and 40 CFR 268.

Hazardous waste will also be managed in accordance with the approved Hazardous Waste Management Section of the Environmental Protection Plan. Store hazardous wastes in approved containers in accordance with 49 CFR 173 and 49 CFR 178. Hazardous waste generated within the confines of Government facilities will be identified as being generated by the Government.

Prior to removal of any hazardous waste from Government property, all hazardous waste manifests must be signed by activity personnel from the Station Environmental Office. No hazardous waste must be brought onto Government property. Provide to the Contracting Officer a copy of waste determination documentation for any solid waste streams that have any potential to be hazardous waste or contain any chemical constituents listed in 40 CFR 372-SUBPART D. For hazardous wastes spills, verbally notify the Contracting Officer immediately.

3.12.2.1 Regulated Waste Storage/Satellite Accumulation/90 Day Storage Areas

If the work requires the temporary storage/collection of regulated or hazardous wastes, the Contractor will request the establishment of a Regulated Waste Storage Area, a Satellite Accumulation Area, or a 90 Day Storage Area at the point of generation. The Contractor must submit a request in writing to the Contracting Officer providing the following information:

Contract Number
Contractor
Haz/Waste or Regulated Waste POC
Phone Number
Type of Waste
Source of Waste
Emergency POC
Phone Number
Location of the Site

(Attach Site Plan to the Request)

Attach a waste determination form. Allow ten working days for processing this request. The designated area where waste is being stored shall be barricaded and a sign identifying as follows:

"DANGER - UNAUTHORIZED PERSONNEL KEEP OUT"

3.12.2.2 Sampling and Analysis of HW

a. Waste Sampling

Sample waste in accordance with EPA 530/F-93/004. Each sampled drum or container will be clearly marked with the Contractor's identification number and cross referenced to the chemical analysis performed.

b. Laboratory Analysis

Follow the analytical procedure and methods in accordance with the 40 CFR 261. The Contractor will provide all analytical results and reports performed to the Contracting Officer

c. Analysis Type

Identify waste hazardous material/hazardous waste by analyzing for the following properties as a minimum: ignitability, corrosiveness, total chlorides, BTU value, PCBs, TCLP for heavy metals, and cyanide.

3.12.2.3 Hazardous Waste Disposal

No hazardous, toxic, or universal waste shall be disposed or hazardous material abandoned on government property. And unless otherwise other wise noted in this contract, the government is not responsible for disposal of Contractor generated waste material. The disposal of incidental materials used to accomplish the work including, but not limited to aerosol cans, waste paint, cleaning solvents, contaminated brushes, rags, clothing, etc. are the responsibility of the Contractor. The list is illustrative rather than inclusive.

The Contractor is not authorized to discharge any materials to sanitary sewer, storm drain, or water way or conduct waste treatment or disposal on government property without written approval of the Contracting Officer.

Control of stored waste, packaging, sampling, analysis, and disposal will be determined by the details in the contract. The requirements for jobs in the following paragraphs will be used as the guidelines for disposal of any hazardous waste generated.

a. Responsibilities for Contractor's Disposal

Contractor responsibilities include any generation of WHM/HW requiring Contractor disposal of solid waste or liquid.

(1) Provide all service necessary for the final treatment/disposal of the hazardous material/waste in accordance with all local, State and Federal laws and regulations, and the terms and conditions of the contract within sixty (60) days after the materials have been generated. These services will include all necessary personnel, labor, transportation, packaging, detailed analysis (if required for disposal, and/or transportation, including manifesting or completing waste profile sheets, equipment, and the compilation of all documentation is required).

(2) Contain all waste in accordance with 40 CFR 260, 40 CFR 261, 40 CFR 262, 40 CFR 263, 40 CFR 264, 40 CFR 265, 40 CFR 266,

40 CFR 268, 40 CFR 270, 40 CFR 272, 40 CFR 273, 40 CFR 279, 40 CFR 280, and 40 CFR 761.

(3) Obtain a representative sample of the material generated for each job done to provide waste stream determination.

(4) Analyze each sample taken and providing analytical results to the Contracting Officer. Provide two copies of the results.

(5) Determine the DOT proper shipping names for all waste (each container requiring disposal) and will demonstrate how this determination is developed and supported by the sampling and analysis requirements contained herein to the Contracting Officer.

Contractor Disposal Turn-In Requirements

For any waste hazardous materials or hazardous waste generated which requires the Contractor to dispose of, the following conditions must be complied with in order to be acceptable for disposal:

(1) Drums compatible with waste contents and drums meet DOT requirements for 49 CFR 173 for transportation of materials.

(2) Drums banded to wooden pallets. No more than three (3) 55 gallon drums to a pallet, or two (2) 85 gallon over packs.

(3) Band using 1-1/4 inch minimum band on upper third of drum.

(4) Recovery materials label (provided by Code 106.321) located in middle of drum, filled out to indicate actual volume of material, name of material manufacturer, other vendor information as available.

(5) Always have three (3) to five (5) inches of empty space above volume of material. This space is called 'outage'.

3.12.2.4 Universal Waste/e-Waste Management

Universal waste including but not limited to some mercury containing building products such florescent lamps, mercury vapor lamps, high pressure sodium lamps, CRTs, batteries, electrical equipment containing PCBs, and consumed electronic devices, shall be managed in accordance with applicable environmental law and installation instructions.

3.12.3 Class I and II ODS Prohibition

Class I and II ODS in pure or blended form as defined and identified herein must not be used in the performance of this contract, nor be provided as part of the equipment except for the use of servicing existing government owned equipment. This prohibition will be considered to prevail over any other provision, specification, drawing, or referenced documents.

3.12.3.1 Recycling Requirements

Recycle used refrigerants and ozone depleting substances generated during the performance of this contract to the maximum extent practicable to minimize used refrigerant and ozone depleting substance disposal as HW.

Test, collect, transfer, recycle, and/or arrange for shipping and proper

disposal of used refrigerants and ozone depleting substances generated during the performance of work under this contract. The Contractor is responsible for all associated costs.

Any and all Class I ODS and R-22 recovered by the Contractor as part of this contract shall be packaged and turned over to the Government for recycling upon the completion of the work covered by this contract. The Contractor shall arrange for recycling of used refrigerants not turned over to the government, at a licensed refrigerant recycler approved by the Contracting Officer.

3.12.3.2 EPA Certification Requirements

Heating and air conditioning technicians must be certified through an EPA-approved program. Copies of certifications shall be maintained at the employees' place of business and be carried as a wallet card by the technician, as provided by environmental law.

3.12.3.3 Accidental Venting of Refrigerant

Accidental venting of a refrigerant is a release and must be reported to the Contracting Officer

3.13 DUST CONTROL

Keep dust down at all times, including during nonworking periods. Sprinkle or treat, with dust suppressants, the soil at the site, haul roads, and other areas disturbed by operations. Dry power brooming will not be permitted. Instead, use vacuuming, wet mopping, wet sweeping, or wet power brooming. Air blowing will be permitted only for cleaning nonparticulate debris such as steel reinforcing bars. Only wet cutting will be permitted for cutting concrete blocks, concrete, and bituminous concrete. Do not unnecessarily shake bags of cement, concrete mortar, or plaster.

3.13.1 Dirt and Dust Control Plan

Submit truck and material haul routes along with a plan for controlling dirt, debris, and dust on base roadways. As a minimum, identify in the plan the subcontractor and equipment for cleaning along the haul route and measures to reduce dirt, dust, and debris from roadways.

3.14 ABRASIVE BLASTING

3.14.1 Blasting Operations

The use of silica sand is prohibited in sandblasting.

Provide tarpaulin drop cloths and windscreens to enclose abrasive blasting operations to confine and collect dust, abrasive, agent, paint chips, and other debris in accordance with the requirements specified. Perform work involving removal of hazardous material in accordance with 29 CFR 1910.

3.14.2 Disposal Requirements

Submit analytical results of the debris generated from abrasive blasting operations per Laboratory Analysis in paragraph SAMPLING AND ANALYSIS OF HW. Hazardous waste generated from blasting operations will be managed in accordance with paragraph CONTROL AND MANAGEMENT OF HAZARDOUS WASTE and with the approved HWMP. Disposal of non-hazardous abrasive blasting debris

will be in accordance with paragraph CONTROL AND DISPOSAL OF SOLID WASTES.

3.15 NOISE

Make the maximum use of low-noise emission products, as certified by the EPA. Blasting or use of explosives will not be permitted without written permission from the Contracting Officer, and then only during the designated times. Confine pile-driving operations to the period between 8 a.m. and 4 p.m., Monday through Friday, exclusive of holidays, unless otherwise specified.

3.16 MERCURY MATERIALS

Mercury is prohibited in the construction of this facility, unless specified otherwise, and with the exception of mercury vapor lamps and fluorescent lamps. Dumping of mercury-containing materials and devices such as mercury vapor lamps, fluorescent lamps, and mercury switches, in rubbish containers is prohibited. Remove without breaking, pack to prevent breakage, and transport out of the activity in an unbroken condition for disposal as directed. Immediately report to the Environmental Office and the Contracting Officer instances of breakage or mercury spillage. Clean mercury spill area to the satisfaction of the Contracting Officer.

Cleanup of a mercury spill shall not be recycled and shall be managed as a hazardous waste for disposal.

-- End of Section --

SECTION 01 57 20.00 10

ENVIRONMENTAL PROTECTION
04/06

PART 1 GENERAL

1.1 REFERENCES

The publications listed below form a part of this specification to the extent referenced. The publications are referred to within the text by the basic designation only.

U.S. AIR FORCE (USAF)

AFI 32-1053	(2009) Integrated Pest Management Program

U.S. ARMY (DA)

DA AR 200-1	(2007) Environmental Protection and Enhancement

U.S. ARMY CORPS OF ENGINEERS (USACE)

EM 385-1-1	(2008; Errata 1-2010; Changes 1-3 2010; Changes 4-6 2011; Change 7 2012) Safety and Health Requirements Manual
WETLANDS DELINEATION MANUAL	(1987) Corps of Engineers Wetlands Delineation Manual

U.S. NATIONAL ARCHIVES AND RECORDS ADMINISTRATION (NARA)

33 CFR 328	Definitions of Waters of the United States
40 CFR 150 - 189	Pesticide Programs
40 CFR 260	Hazardous Waste Management System: General
40 CFR 261	Identification and Listing of Hazardous Waste
40 CFR 262	Standards Applicable to Generators of Hazardous Waste
40 CFR 279	Standards for the Management of Used Oil
40 CFR 302	Designation, Reportable Quantities, and Notification
40 CFR 355	Emergency Planning and Notification
40 CFR 68	Chemical Accident Prevention Provisions
49 CFR 171 - 178	Hazardous Materials Regulations

1.2 DEFINITIONS

1.2.1 Environmental Pollution and Damage

Environmental pollution and damage is the presence of chemical, physical, or biological elements or agents which adversely affect human health or welfare; unfavorably alter ecological balances of importance to human life; affect other species of importance to humankind; or degrade the environment aesthetically, culturally and/or historically.

1.2.2 Environmental Protection

Environmental protection is the prevention/control of pollution and habitat disruption that may occur to the environment during construction. The control of environmental pollution and damage requires consideration of land, water, and air; biological and cultural resources; and includes management of visual aesthetics; noise; solid, chemical, gaseous, and liquid waste; radiant energy and radioactive material as well as other pollutants.

1.2.3 Contractor Generated Hazardous Waste

Contractor generated hazardous waste means materials that, if abandoned or disposed of, may meet the definition of a hazardous waste. These waste streams would typically consist of material brought on site by the Contractor to execute work, but are not fully consumed during the course of construction. Examples include, but are not limited to, excess paint thinners (i.e. methyl ethyl ketone, toluene etc.), waste thinners,excess paints, excess solvents, waste solvents, and excess pesticides, and contaminated pesticide equipment rinse water.

1.2.4 Installation Pest Management Coordinator

Installation Pest Management Coordinator (IPMC) is the individual officially designated by the Installation Commander to oversee the Installation Pest Management Program and the Installation Pest Management Plan.

1.2.5 Project Pesticide Coordinator

The Project Pesticide Coordinator (PPC) is an individual that resides at a Civil Works Project office and that is responsible for oversight of pesticide application on Project grounds.

1.2.6 Land Application for Discharge Water

The term "Land Application" for discharge water implies that the Contractor must discharge water at a rate which allows the water to percolate into the soil. No sheeting action, soil erosion, discharge into storm sewers, discharge into defined drainage areas, or discharge into the "waters of the United States" must occur. Land Application must be in compliance with all applicable Federal, State, and local laws and regulations.

1.2.7 Pesticide

Pesticide is defined as any substance or mixture of substances intended for preventing, destroying, repelling, or mitigating any pest, or intended for use as a plant regulator, defoliant or desiccant.

1.2.8 Pests

The term "pests" means arthropods, birds, rodents, nematodes, fungi, bacteria, viruses, algae, snails, marine borers, snakes, weeds and other organisms (except for human or animal disease-causing organisms) that adversely affect readiness, military operations, or the well-being of personnel and animals; attack or damage real property, supplies, equipment, or vegetation; or are otherwise undesirable.

1.2.9 Surface Discharge

The term "Surface Discharge" implies that the water is discharged with possible sheeting action and subsequent soil erosion may occur. Waters that are surface discharged may terminate in drainage ditches, storm sewers,creeks, and/or "waters of the United States" and would require a permit to discharge water from the governing agency.

1.2.10 Waters of the United States

All waters which are under the jurisdiction of the Clean Water Act, as defined in 33 CFR 328.

1.2.11 Wetlands

Those areas that are inundated or saturated by surface or ground water at a frequency and duration sufficient to support, and that under normal circumstances do support, a prevalence of vegetation typically adapted for life in saturated soil conditions. Wetlands generally include swamps, marshes, and bogs. Official determination of whether or not an area is classified as a wetland must be done in accordance with WETLANDS DELINEATION MANUAL.

1.3 GENERAL REQUIREMENTS

Minimize environmental pollution and damage that may occur as the result of construction operations. The environmental resources within the project boundaries and those affected outside the limits of permanent work must be protected during the entire duration of this contract. Comply with all applicable environmental Federal, State, and local laws and regulations. Any delays resulting from failure to comply with environmental laws and regulations will be the Contractor's responsibility.

1.4 SUBCONTRACTORS

Ensure compliance with this section by subcontractors.

1.5 PAYMENT

No separate payment will be made for work covered under this section. Payment of fees associated with environmental permits, application, and/or notices obtained by the Contractor, and payment of all fines/fees for violation or non-compliance with Federal, State, Regional and local laws and regulations are the Contractor's responsibility. All costs associated with this section must be included in the contract price.

1.6 SUBMITTALS

Government approval is required for submittals with a "G" designation; submittals not having a "G" designation are for Contractor Quality Control

approval. When used, a designation following the "G" designation identifies the office that will review the submittal for the Government. Submit the following in accordance with Section 01 33 00 SUBMITTAL PROCEDURES:

SD-01 Preconstruction Submittals

Environmental Protection Plan; G

1.7 ENVIRONMENTAL PROTECTION PLAN

Prior to commencing construction activities or delivery of materials to the site, submit an Environmental Protection Plan for review and approval by the Installation Environmental Division. The purpose of the Environmental Protection Plan is to present a comprehensive overview of known or potential environmental issues which the Contractor must address during construction. Issues of concern must be defined within the Environmental Protection Plan as outlined in this section. Address each topic at a level of detail commensurate with the environmental issue and required construction task(s). Topics or issues which are not identified in this section, but are considered necessary, must be identified and discussed after those items formally identified in this section. Prior to submittal of the Environmental Protection Plan, meet with the Contracting Officer for the purpose of discussing the implementation of the initial Environmental Protection Plan; possible subsequent additions and revisions to the plan including any reporting requirements; and methods for administration of the Contractor's Environmental Plans. The Environmental Protection Plan must be current and maintained onsite by the Contractor.

1.7.1 Compliance

No requirement in this Section will relieve the Contractor of any applicable Federal, State, and local environmental protection laws and regulations. During Construction, the Contractor will be responsible for identifying, implementing, and submitting for approval any additional requirements to be included in the Environmental Protection Plan.

1.7.2 Contents

Include in the environmental protection plan, but not limit it to, the following:

a. Name(s) of person(s) within the Contractor's organization who is(are) responsible for ensuring adherence to the Environmental Protection Plan.

b. Name(s) and qualifications of person(s) responsible for manifesting hazardous waste to be removed from the site, if applicable.

c. Name(s) and qualifications of person(s) responsible for training the Contractor's environmental protection personnel.

d. Description of the Contractor's environmental protection personnel training program.

e. An erosion and sediment control plan which identifies the type and location of the erosion and sediment controls to be provided. The plan must include monitoring and reporting requirements to assure that the control measures are in compliance with the erosion and sediment control plan, Federal, State, and local laws and regulations. A Storm

Water Pollution Prevention Plan (SWPPP) may be substituted for this plan.

f. Drawings showing locations of proposed temporary excavations or embankments for haul roads, stream crossings, material storage areas, structures, sanitary facilities, and stockpiles of excess or spoil materials including methods to control runoff and to contain materials on the site.

g. Traffic control plans including measures to reduce erosion of temporary roadbeds by construction traffic, especially during wet weather. Plan shall include measures to minimize the amount of mud transported onto paved public roads by vehicles or runoff.

h. Work area plan showing the proposed activity in each portion of the area and identifying the areas of limited use or nonuse. Plan should include measures for marking the limits of use areas including methods for protection of features to be preserved within authorized work areas.

i. Drawing showing the location of borrow areas.

j. Include in the Spill Control plan the procedures, instructions, and reports to be used in the event of an unforeseen spill of a substance regulated by 40 CFR 68, 40 CFR 302, 40 CFR 355, and/or regulated under State or Local laws and regulations. The Spill Control Plan supplements the requirements of EM 385-1-1 and the DFSP Craney Island SPCC Plan. Include in this plan, as a minimum:

(1) The name of the individual who will report any spills or hazardous substance releases and who will follow up with complete documentation. This individual will immediately notify the Contracting Officer and Facility Environmental Office in addition to the legally required Federal, State, and local reporting channels (including the National Response Center 1-800-424-8802) if a reportable quantity is released to the environment. Include in the plan a list of the required reporting channels and telephone numbers.

(2) The name and qualifications of the individual who will be responsible for implementing and supervising the containment and cleanup.

(3) Training requirements for Contractor's personnel and methods of accomplishing the training.

(4) A list of materials and equipment to be immediately available at the job site, tailored to cleanup work of the potential hazard(s) identified.

(5) The names and locations of suppliers of containment materials and locations of additional fuel oil recovery, cleanup, restoration, and material-placement equipment available in case of an unforeseen spill emergency.

(6) The methods and procedures to be used for expeditious contaminant cleanup.

k. A non-hazardous solid waste disposal plan identifying methods and locations for solid waste disposal including clearing debris and

schedules for disposal.

(1) Identify any subcontractors responsible for the transportation and disposal of solid waste. Submit licenses or permits for solid waste disposal sites that are not a commercial operating facility.

(2) Evidence of the disposal facility's acceptance of the solid waste must be attached to this plan during the construction. Attach a copy of each of the Non-hazardous Solid Waste Diversion Reports to the disposal plan. Submit the report for the previous quarter on the first working day after the first quarter that non-hazardous solid waste has been disposed and/or diverted (e.g. the first working day of January, April, July, and October).

(3) Indicate in the report the total amount of waste generated and total amount of waste diverted in cubic yards or tons along with the percent that was diverted.

(4) A recycling and solid waste minimization plan with a list of measures to reduce consumption of energy and natural resources. Detail in the plan the Contractor's actions to comply with and to participate in Federal, State, Regional, and local government sponsored recycling programs to reduce the volume of solid waste at the source.

l. An air pollution control plan detailing provisions to assure that dust, debris, materials, trash, etc., do not become air borne and travel off the project site.

m. A contaminant prevention plan that: identifies potentially hazardous substances to be used on the job site; identifies the intended actions to prevent introduction of such materials into the air, water, or ground; and details provisions for compliance with Federal, State, and local laws and regulations for storage and handling of these materials. In accordance with EM 385-1-1, a copy of the Material Safety Data Sheets (MSDS) and the maximum quantity of each hazardous material to be onsite at any given time must be included in the contaminant prevention plan. Update the plan as new hazardous materials are brought onsite or removed from the site.

n. A waste water management plan that identifies the methods and procedures for management and/or discharge of waste waters which are directly derived from construction activities, such as concrete curing water, clean-up water, dewatering of ground water, disinfection water, hydrostatic test water, and water used in flushing of lines. If a settling/retention pond is required, the plan must include the design of the pond including drawings, removal plan, and testing requirements for possible pollutants. If land application will be the method of disposal for the waste water, the plan must include a sketch showing the location for land application along with a description of the pretreatment methods to be implemented. If surface discharge will be the method of disposal, include a copy of the permit and associated documents as an attachment prior to discharging the waste water. If disposal is to a sanitary sewer, the plan must include documentation that the Waste Water Treatment Plant Operator has approved the flow rate, volume, and type of discharge.

o. A historical, archaeological, cultural resources biological resources and wetlands plan that identifies procedures to be followed if

historical archaeological, cultural resources, biological resources and wetlands not previously known to be onsite or in the area are discovered during construction. Include in the plan methods to assure the protection of known or discovered resources, identifying lines of communication between Contractor personnel and the Contracting Officer.

p. Include and update a pesticide treatment plan, as information becomes available. Include in the plan: sequence of treatment, dates, times, locations, pesticide trade name, EPA registration numbers, authorized uses, chemical composition, formulation, original and applied concentration, application rates of active ingredient (i.e. pounds of active ingredient applied), equipment used for application and calibration of equipment. Federal, State, Regional and Local pest management record keeping and reporting requirements as well as any additional Installation Project Office specific requirements are the Contractor's responsibility in conformance with DA AR 200-1 Chapter 5--Pest Management, Section 5-4 "Program requirements" AFI 32-1053 Sections 3.4.13 and 3.4.14 for data required to be reported to the Installation.

1.7.3 Appendix

Attach to the Environmental Protection Plan, as an appendix, copies of all environmental permits, permit application packages, approvals to construct, notifications, certifications, reports, and termination documents.

1.8 PROTECTION FEATURES

This paragraph supplements the Contract Clause PROTECTION OF EXISTING VEGETATION, STRUCTURES, EQUIPMENT, UTILITIES, AND IMPROVEMENTS. Prior to start of any onsite construction activities, the Contractor and the Contracting Officer will make a joint condition survey. Immediately following the survey, the Contractor will prepare a brief report including a plan describing the features requiring protection under the provisions of the Contract Clauses, which are not specifically identified on the drawings as environmental features requiring protection along with the condition of trees, shrubs and grassed areas immediately adjacent to the site of work and adjacent to the Contractor's assigned storage area and access route(s), as applicable. This survey report will be signed by both the the Contractor and the Contracting Officer upon mutual agreement as to its accuracy and completeness. The Contractor must protect those environmental features included in the survey report and any indicated on the drawings, regardless of interference which their preservation may cause to the work under the contract.

1.9 ENVIRONMENTAL ASSESSMENT OF CONTRACT DEVIATIONS

Any deviations from the drawings,plans and specifications, requested by the Contractor and which may have an environmental impact, will be subject to approval by the Contracting Officer and may require an extended review, processing, and approval time. The Contracting Officer reserves the right to disapprove alternate methods, even if they are more cost effective, if the Contracting Officer determines that the proposed alternate method will have an adverse environmental impact.

1.10 NOTIFICATION

The Contracting Officer will notify the Contractor in writing of any observed noncompliance with Federal, State or local environmental laws or

regulations, permits, and other elements of the Contractor's Environmental Protection plan. After receipt of such notice, the Contractor will inform the Contracting Officer of the proposed corrective action and take such action when approved by the Contracting Officer. The Contracting Officer may issue an order stopping all or part of the work until satisfactory corrective action has been taken. No time extensions will be granted or equitable adjustments allowed for any such suspensions. This is in addition to any other actions the Contracting Officer may take under the contract, or in accordance with the Federal Acquisition Regulation or Federal Law.

PART 2 PRODUCTS

NOT USED

PART 3 EXECUTION

3.1 ENVIRONMENTAL PERMITS AND COMMITMENTS

Obtaining and complying with all environmental permits and commitments required by Federal, State, Regional, and local environmental laws and regulations is the Contractor's responsibility.

3.2 LAND RESOURCES

Confine all activities to areas defined by the drawings and specifications. Identify any land resources to be preserved within the work area prior to the beginning of any construction. Do not remove, cut, deface, injure, or destroy land resources including trees, shrubs, vines, grasses, topsoil, and land forms without approval, except in areas indicated on the drawings or specified to be cleared. Ropes, cables, or guys will not be fastened to or attached to any trees for anchorage unless specifically authorized. Provide effective protection for land and vegetation resources at all times, as defined in the following subparagraphs. Remove stone, soil, or other materials displaced into uncleared areas.

3.2.1 Work Area Limits

Mark the areas that need not be disturbed under this contract prior to commencing construction activities. Mark or fence isolated areas within the general work area which are not to be disturbed. Protect monuments and markers before construction operations commence. Where construction operations are to be conducted during darkness, any markers must be visible in the dark. The Contractor's personnel must be knowledgeable of the purpose for marking and/or protecting particular objects.

3.2.2 Landscape

Trees, shrubs, vines, grasses, land forms and other landscape features indicated and defined on the drawings to be preserved must be clearly identified by marking, fencing, or wrapping with boards, or any other approved techniques. Restore landscape features damaged or destroyed during construction operations outside the limits of the approved work area.

3.2.3 Erosion and Sediment Controls

Providing erosion and sediment control measures in accordance with Federal, State, and local laws and regulations is the Contractor's responsibility.

Select and maintain the erosion and sediment controls such that water quality standards are not violated as a result of construction activities. The area of bare soil exposed at any one time by construction operations should be kept to a minimum. Construct or install temporary and permanent erosion and sediment control best management practices (BMPs) as specified in Section 01 57 23 TEMPORARY STORM WATER POLLUTION CONTROL. BMPs may include, but not be limited to, vegetation cover, stream bank stabilization, slope stabilization, silt fences, construction of terraces, interceptor channels, sediment traps, inlet and outfall protection, diversion channels, and sedimentation basins. Remove any temporary measures after the area has been stabilized.

3.2.4 Contractor Facilities and Work Areas

Place field offices, staging areas, stockpile storage, and temporary buildings in areas designated on the drawings or as directed by the Contracting Officer. Temporary movement or relocation of Contractor facilities will be made only when approved. Erosion and sediment controls must be provided for onsite borrow and spoil areas to prevent sediment from entering nearby waters. Temporary excavation and embankments for plant and/or work areas must be controlled to protect adjacent areas.

3.3 WATER RESOURCES

Monitor all water areas affected by construction activities to prevent pollution of surface and ground waters. Do not apply toxic or hazardous chemicals to soil or vegetation unless otherwise indicated. For construction activities immediately adjacent to impaired surface waters, the Contractor must be capable of quantifying sediment or pollutant loading to that surface water when required by State or Federally issued Clean Water Act permits.

3.3.1 Cofferdams, Diversions, and Dewatering Operations

Construction operations for dewatering, removal of cofferdams, tailrace excavation, and tunnel closure will be controlled at all times to maintain compliance with existing State water quality standards and designated uses of the surface water body. Comply with the State of Virginia water quality standards and anti-degradation provisions.

3.3.2 Stream Crossings

Stream crossings must allow movement of materials or equipment without violating water pollution control standards of the Federal, State, and local governments.

3.3.3 Wetlands

Do not enter, disturb, destroy, or allow discharge of contaminants into any wetlands.

3.4 AIR RESOURCES

Equipment operation, activities, or processes will be in accordance with all Federal and State air emission and performance laws and standards.

3.4.1 Particulates

Dust particles; aerosols and gaseous by-products from construction

activities; and processing and preparation of materials, such as from asphaltic batch plants; must be controlled at all times, including weekends, holidays and hours when work is not in progress. Maintain excavations, stockpiles, haul roads, permanent and temporary access roads, plant sites, spoil areas, borrow areas, and other work areas within or outside the project boundaries free from particulates which would cause the Federal, State, and local air pollution standards to be exceeded or which would cause a hazard or a nuisance. Sprinkling, chemical treatment of an approved type, baghouse, scrubbers, electrostatic precipitators or other methods will be permitted to control particulates in the work area. Sprinkling, to be efficient, must be repeated to keep the disturbed area damp at all times. Provide sufficient, competent equipment available to accomplish these tasks. Perform particulate control as the work proceeds and whenever a particulate nuisance or hazard occurs. Comply with all State and local visibility regulations.

3.4.2 Odors

Odors from construction activities must be controlled at all times. The odors must be in compliance with State regulations and/or local ordinances and may not constitute a health hazard.

3.4.3 Sound Intrusions

Keep construction activities under surveillance and control to minimize environment damage by noise. Comply with the provisions of the State of Virginia and City of Portsmouth noise ordinance rules.

3.4.4 Burning

Burning is prohibited on the Government premises.

3.5 CHEMICAL MATERIALS MANAGEMENT AND WASTE DISPOSAL

Disposal of wastes will be as directed below, unless otherwise specified in other sections and/or shown on the drawings.

3.5.1 Solid Wastes

Place solid wastes (excluding clearing debris) in containers which are emptied on a regular schedule. Handling, storage, and disposal must be conducted to prevent contamination. Employ segregation measures so that no hazardous or toxic waste will become co-mingled with solid waste. Transport solid waste off Government property and dispose of it in compliance with Federal, State, and local requirements for solid waste disposal. A Subtitle D RCRA permitted landfill will be the minimum acceptable offsite solid waste disposal option. Verify that the selected transporters and disposal facilities have the necessary permits and licenses to operate. Waste materials will be hauled to the landfill site designated by the Contracting Officer. Comply with Federal, State, and local laws and regulations pertaining to the use of landfill areas.

3.5.2 Chemicals and Chemical Wastes

Dispense chemicals ensuring no spillage to the ground or water. Perform and document periodic inspections of dispensing areas to identify leakage and initiate corrective action. This documentation will be periodically reviewed by the Government. Collect chemical waste in corrosion resistant, compatible containers. Collection drums must be monitored and removed to a

staging or storage area when contents are within 6 inches of the top. Wastes will be classified, managed, stored, and disposed of in accordance with Federal, State, and local laws and regulations.

3.5.3 Contractor Generated Hazardous Wastes/Excess Hazardous Materials

Hazardous wastes are defined in 40 CFR 261, or are as defined by applicable State and local regulations. Hazardous materials are defined in 49 CFR 171 - 178. At a minimum, manage and store hazardous waste in compliance with 40 CFR 262. Take sufficient measures to prevent spillage of hazardous and toxic materials during dispensing. Segregate hazardous waste from other materials and wastes, protect it from the weather by placing it in a safe covered location, and take precautionary measures such as berming or other appropriate measures against accidental spillage. Storage, describing, packaging, labeling, marking, and placarding of hazardous waste and hazardous material in accordance with 49 CFR 171 - 178, State, and local laws and regulations is the Contractor's responsibility. Transport Contractor generated hazardous waste off Government property within 60 days in accordance with the Environmental Protection Agency and the Department of Transportation laws and regulations. Dispose of hazardous waste in compliance with Federal, State and local laws and regulations. Spills of hazardous or toxic materials must be immediately reported to the Contracting Officer and the Facility Environmental Office. Cleanup and cleanup costs due to spills are the Contractor's responsibility. Coordinate the disposition of hazardous waste with the Craney Island Hazardous Waste Manager and the Contracting Officer.

3.5.4 Fuel and Lubricants

Storage, fueling and lubrication of equipment and motor vehicles must be conducted in a manner that affords the maximum protection against spill and evaporation. Manage and store fuel, lubricants and oil in accordance with all Federal, State, Regional, and local laws and regulations. Used lubricants and used oil to be discarded must be stored in marked corrosion-resistant containers and recycled or disposed in accordance with 40 CFR 279, State, and local laws and regulations. Storage of fuel on the project site will be in accordance with all Federal, State, and local laws and regulations.

3.5.5 Waste Water

Disposal of waste water will be as specified below.

a. Waste water from construction activities, such as onsite material processing, concrete curing, foundation and concrete clean-up, water used in concrete trucks, forms, etc. will not be allowed to enter water ways or to be discharged prior to being treated to remove pollutants. Dispose of the construction related waste water off-Government property in accordance with all Federal, State, Regional and Local laws and regulations.

b. For discharge of ground water, the Contractor will surface discharge in accordance with the requirements of the State STORM WATER DISCHARGES FROM CONSTRUCTION SITES permit.

c. Water generated from the flushing of lines after hydrostatic testing will be discharged in accordance with the Craney Island UPDES Permit number VA0089605.

3.6 RECYCLING AND WASTE MINIMIZATION

Participate in State and local government sponsored recycling programs. The Contractor is further encouraged to minimize solid waste generation throughout the duration of the project.

3.7 NON-HAZARDOUS SOLID WASTE DIVERSION REPORT

Maintain an inventory of non-hazardous solid waste diversion and disposal of construction and demolition debris. Submit a report to the waste media manager through the Contracting Officer on the first working day after each fiscal year quarter, starting the first quarter that non-hazardous solid waste has been generated. Include the following in the report:

Construction and Demolition (C&D) Debris Disposed	cubic yards or tons, as appropriate
Construction and Demolition (C&D) Debris Recycled	cubic yards or tons, as appropriate
Total C&D Debris Generated	cubic yards or tons, as appropriate

3.8 HISTORICAL, ARCHAEOLOGICAL, AND CULTURAL RESOURCES

If during excavation or other construction activities any previously unidentified or unanticipated historical, archaeological, and cultural resources are discovered or found, all activities that may damage or alter such resources will be temporarily suspended. Resources covered by this paragraph include but are not limited to: any human skeletal remains or burials; artifacts; shell, midden, bone, charcoal, or other deposits; rock or coral alignments, pavings, wall, or other constructed features; and any indication of agricultural or other human activities. Upon such discovery or find, immediately notify the Contracting Officer so that the appropriate authorities may be notified and a determination made as to their significance and what, if any, special disposition of the finds should be made. Cease all activities that may result in impact to or the destruction of these resources. Secure the area and prevent employees or other persons from trespassing on, removing, or otherwise disturbing such resources.

3.9 BIOLOGICAL RESOURCES

Minimize interference with, disturbance to, and damage to fish, wildlife, and plants including their habitat. The protection of threatened and endangered animal and plant species, including their habitat, is the Contractor's responsibility in accordance with Federal, State, Regional, and local laws and regulations.

3.10 INTEGRATED PEST MANAGEMENT

In order to minimize impacts to existing fauna and flora, the Contractor through the Contracting Officer, must coordinate with the Installation Pest Management Coordinator (IPMC) Project Pesticide Coordinator (PPC)at the earliest possible time prior to pesticide application. Discuss integrated pest management strategies with the IPMC and receive concurrence from the IPMC through the COR prior to the application of any pesticide associated with these specifications. Installation Project Office Pest Management personnel will be given the opportunity to be present at all meetings concerning treatment measures for pest or disease control and during application of the pesticide. The use and management of pesticides are regulated under 40 CFR 150 - 189.

3.10.1 Pesticide Delivery and Storage

Deliver pesticides to the site in the original, unopened containers bearing legible labels indicating the EPA registration number and the manufacturer's registered uses. Store pesticides according to manufacturer's instructions and under lock and key when unattended.

3.10.2 Qualifications

For the application of pesticides, use the services of a subcontractor whose principal business is pest control. The subcontractor must be licensed and certified in the state where the work is to be performed.

3.10.3 Pesticide Handling Requirements

Formulate, treat with, and dispose of pesticides and associated containers in accordance with label directions and use the clothing and personal protective equipment specified on the labeling for use during all phases of the application. Furnish Material Safety Data Sheets (MSDS) for all pesticide products.

3.10.4 Application

Apply pesticides using a State Certified Pesticide Applicator in accordance with EPA label restrictions and recommendation. The Certified Applicator must wear clothing and personal protective equipment as specified on the pesticide label. The Contracting Officer will designate locations for water used in formulating. Do not allow the equipment to overflow. All equipment must be inspected for leaks, clogging, wear, or damage and repaired prior to application of pesticide.

3.11 PREVIOUSLY USED EQUIPMENT

Clean all previously used construction equipment prior to bringing it onto the project site. Ensure that the equipment is free from soil residuals, egg deposits from plant pests, noxious weeds, and plant seeds. Consult with the USDA jurisdictional office for additional cleaning requirements.

3.12 MAINTENANCE OF POLLUTION FACILITIES

Maintain permanent and temporary pollution control facilities and devices for the duration of the contract or for that length of time construction activities create the particular pollutant.

3.13 MILITARY MUNITIONS

In the event military munitions, as defined in 40 CFR 260, are discovered or uncovered, the Contractor will immediately stop work in that area and immediately inform the Contracting Officer.

3.14 TRAINING OF CONTRACTOR PERSONNEL

The Contractor's personnel must be trained in all phases of environmental protection and pollution control. Conduct environmental protection/pollution control meetings for all personnel prior to commencing construction activities. Additional meetings must be conducted for new personnel and when site conditions change. Include in the training and meeting agenda: methods of detecting and avoiding pollution;

familiarization with statutory and contractual pollution standards; installation and care of devices, vegetative covers, and instruments required for monitoring purposes to ensure adequate and continuous environmental protection/pollution control; anticipated hazardous or toxic chemicals or wastes, and other regulated contaminants; recognition and protection of archaeological sites, artifacts, wetlands, and endangered species and their habitat that are known to be in the area.

3.15 CONTAMINATED MEDIA MANAGEMENT

Manage contaminated environmental media consisting of, but not limited to, ground water, soils, and sediments in accordance with Section 01 57 19.00 20.

3.16 POST CONSTRUCTION CLEANUP

The Contractor will clean up all areas used for construction in accordance with Contract Clause: "Cleaning Up". Unless otherwise instructed in writing by the Contracting Officer, obliterate all signs of temporary construction facilities such as haul roads, work area, structures, foundations of temporary structures, stockpiles of excess or waste materials, and other vestiges of construction prior to final acceptance of the work. The disturbed area must be graded, filled and the entire area seeded unless otherwise indicated.

-- End of Section --

SECTION 01 57 23

TEMPORARY STORM WATER POLLUTION CONTROL
04/08

PART 1 GENERAL

1.1 SUMMARY

The work consists of implementing the storm water pollution prevention measures to prevent sediment from entering streams or water bodies as specified in this Section in conformance with the requirements of Section 01 57 20.00 10 ENVIRONMENTAL PROTECTION, and the requirements of the National Pollutant Discharge Elimination System (NPDES).

1.2 REFERENCES

The publications listed below form a part of this specification to the extent referenced. The publications are referred to within the text by the basic designation only.

ASTM INTERNATIONAL (ASTM)

ASTM D4873	(2002; R 2009) Identification, Storage, and Handling of Geosynthetic Rolls and Samples

1.3 EROSION AND SEDIMENT CONTROLS

The controls and measures required of the Contractor are described below.

1.3.1 Stabilization Practices

The stabilization practices to be implemented include temporary seeding, mulching, geotextiles, sod stabilization, vegetative buffer strips, erosion control matts, protection of trees, preservation of mature vegetation, etc. On the daily CQC Report, record the dates when the major grading activities occur, (e.g., excavation and grading); when construction activities temporarily or permanently cease on a portion of the site; and when stabilization practices are initiated. Except as provided in paragraphs UNSUITABLE CONDITIONS and NO ACTIVITY FOR LESS THAN 21 DAYS, initiate stabilization practices as soon as practicable, but no more than 14 days, in any portion of the site where construction activities have temporarily or permanently ceased.

1.3.1.1 Unsuitable Conditions

Where the initiation of stabilization measures by the fourteenth day after construction activity temporarily or permanently ceases or is precluded by unsuitable conditions caused by the weather, initiate stabilization practices as soon as practicable after conditions become suitable.

1.3.1.2 No Activity for Less Than 21 Days

When the total time period in which construction activity is temporarily ceased on a portion of the site is 21 days minimum, stabilization practices do not have to be initiated on that portion of the site until 14 days have

elapsed after construction activity temporarily ceased.

1.3.1.3 Burnoff

Burnoff of the ground cover is not permitted.

1.3.1.4 Protection of Erodible Soils

Immediately finish the earthwork brought to a final grade, as indicated or specified, and protect the side slopes and back slopes upon completion of rough grading. Plan and conduct earthwork to minimize the duration and exposure of unprotected soils.

1.3.2 Erosion, Sediment and Stormwater Control

a. Submit "Erosion and Sediment Controls" (E&S) (form provided at the pre-construction conference) and Storm Water Inspection Reports for General Permit to the Contracting Officer once every 7 calendar days and within 24 hours of a storm event that produces 0.5 inch or more of rain.

b. Storm Water Notice of Intent for Construction Activities

c. Submit a Storm Water Notice of Intent for NPDES coverage under the general permit for construction activities and a Storm Water Pollution Prevention Plan (SWPPP) for the project to the Contracting Officer prior to the commencement of work. The SWPPP shall meet the requirements of the Commonwealth of Virginia general permit for storm water discharges from construction sites. Submit the SWPPP along with any required Notice of Intents, Notice of Termination, and appropriate permit fees, via the Contracting Officer, to the appropriate State agency for approval, a minimum of 14 calendar days prior to the start of any land disturbing activities. Maintain an approved copy of the SWPPP at the construction on-site office, and continually update as regulations require, to reflect current site conditions. Include within the SWPPP:

1. Identify potential sources of pollution which may be reasonably expected to affect the quality of storm water discharge from the site.

2. Describe and ensure implementation of practices which will be used to reduce the pollutants in storm water discharge from the site.

3. Ensure compliance with terms of the Commonwealth of Virginia general permit for storm water discharge.

4. Select applicable best management practices from the Virginia Erosion and Sediment Control Handbook (VESCH) and Virginia Administrative Code 9VAC25-840 Erosion and Sediment Control Regulations.

5. Include a completed copy of the Registration Statement, BMP Inspection Report Template and Notice of Termination except for the effective date.

6. Storm Water Pollution Prevention Measures and Notice of Intent 40 CFR 122.26, EPA 832-R-92-005. Provide a "Storm Water Pollution Prevention Plan" (SWPPP) for the project. The SWPPP will meet the

requirements of the State of Virginia general permit for storm water discharges from construction activities. Submit the SWPPP to the Contracting Officer for review, approval and signature a minimum of 15 days prior to the start of any land disturbing activities. Maintain an approved copy of the SWPPP at the construction on-site office, and continually update as regulations require, to reflect current site conditions.

7. Following SWPPP approval, submit Registration Statement and appropriate permit fees to the Virginia Department of Environmental Quality (VDEQ) before any land disturbing activities begin. Coverage under the permit begins on the day the Registration Statement and fee are: (1) post marked by mail, (2) registered online at the VDEQ's website, or (3) hand delivered to the VDEQ office. The Contractor is responsible for all associated fees; contact VDEQ to determine applicable fees.

8. Install, inspect, and maintain best management practices (BMPs) as required by the general permit. Prepare and submit to VDEQ, BMP Inspection Reports as required by the general permit.

9. Once construction is complete and the site has been stabilized with a final, sustainable cover, submit the Notice of Termination to VDEQ within 30 days after all land disturbing activities end.

10. At the time of submittal to VDEQ, concurrently forward copies of the SWPPP, Registration Statement, BMP Inspection Reports, and Notice of Termination to the Contracting Officer, and to Mid-Atlantic Environmental at: Commander, Naval Facilities Engineering Command, MIDLANT, Code: EV2, 9742 Maryland Avenue, Norfolk, VA 23511-3095.

11. Information on the permit application, SWPPP requirements, Registration Statement, BMP Inspection Reports, and Notice of Termination can be found in the Virginia Permit Regulation 9 VAC 25-180. The Registration Statement, Notice of Termination, and permit fee forms can be found on the VDEQ website http://www.deq.virginia.gov/Programs/Water/StormwaterManagement/VSMPPermits/ConstructionGeneralPermit.aspx. This website also contains the permit regulations and information on how to obtain coverage online.

1.3.3 Structural Practices

Implement structural practices to divert flows from exposed soils, temporarily store flows, or otherwise limit runoff and the discharge of pollutants from exposed areas of the site. Implement structural practices in a timely manner, during the construction process, to minimize erosion and sediment runoff. Include (at a minimum) the devices that are shown on the drawings.

1.3.4 Vegetation and Mulch

a. Provide temporary protection on sides and back slopes as soon as rough grading is completed or sufficient soil is exposed to require erosion protection. Protect slopes by accelerated growth of permanent vegetation, temporary vegetation, mulching, or netting. Stabilize slopes by hydroseeding, anchoring mulch in place, covering with anchored netting, sodding, or such combination of these and other

methods necessary for effective erosion control.

b. Seeding: Provide new seeding where ground is disturbed. Include topsoil or nutriment during the seeding operation necessary to reestablish a suitable stand of grass.

1.4 SUBMITTALS

Government approval is required for submittals with a "G" designation; submittals not having a "G" designation are for Contractor Quality Control approval. Submit the following in accordance with Section 01 33 00 SUBMITTAL PROCEDURES:

SD-01 Preconstruction Submittals

Storm Water Pollution Prevention Plan
Storm Water Notice of Intent
Pollution prevention plan and Notice of intent for NPDES coverage under the general permit for construction activities

SD-06 Test Reports

Storm Water Inspection Reports for General Permit
Erosion and Sediment Controls

1.5 DELIVERY, STORAGE, AND HANDLING

Identify, store and handle filter fabric in accordance with ASTM D4873.

PART 2 PRODUCTS

Conform to the requirements of the VESCH and Virginia Administrative Code 9VAC25-840 Erosion and Sediment Control Regulations.

PART 3 EXECUTION

3.1 INSTALLATION OF EROSION AND SEDIMENT CONTROL MEASURES

Conform to the VESCH and Virginia Administrative Code 9VAC25-840 Erosion and Sediment Control Regulations.

3.2 FIELD QUALITY CONTROL

Maintain the temporary and permanent vegetation, erosion and sediment control measures, and other protective measures in good and effective operating condition by performing routine inspections to determine condition and effectiveness, by restoration of destroyed vegetative cover, and by repair of erosion and sediment control measures and other protective measures.

3.3 INSPECTIONS

3.3.1 General

Inspect disturbed areas of the construction site, areas that have not been finally stabilized used for storage of materials exposed to precipitation, stabilization practices, structural practices, other controls, and area where vehicles exit the site at least once every seven (7) calendar days and within 24 hours of the end of any storm that produces 0.5 inches or

more rainfall at the site. Conduct inspections at least once every month where sites have been finally stabilized.

3.3.2 Inspections Details

Inspect disturbed areas and areas used for material storage that are exposed to precipitation for evidence of, or the potential for, pollutants entering the drainage system. Observe erosion and sediment control measures identified in the Storm Water Pollution Prevention Plan to ensure that they are operating correctly. Inspect discharge locations or points to ascertain whether erosion control measures are effective in preventing significant impacts to receiving waters. Inspect locations where vehicles exit the site for evidence of offsite sediment tracking.

3.3.3 Inspection Reports

For each inspection conducted, prepare a report summarizing the scope of the inspection, name(s) and qualifications of personnel making the inspection, the date(s) of the inspection, major observations relating to the implementation of the Storm Water Pollution Prevention Plan, maintenance performed, and actions taken. Furnish the report to the Contracting Officer within 24 hours of the inspection as a part of the Contractor's daily CQC REPORT. A copy of the inspection report shall be maintained on the job site.

-- End of Section --

SECTION 01 58 00

PROJECT IDENTIFICATION
08/09

PART 1 GENERAL

1.1 REFERENCES

The publications listed below form a part of this specification to the extent referenced. The publications are referred to within the text by the basic designation only.

AMERICAN WOOD PROTECTION ASSOCIATION (AWPA)

AWPA C1	(2003) All Timber Products - Preservative Treatment by Pressure Processes
AWPA C2	(2003) Lumber, Timber, Bridge Ties and Mine Ties - Preservative Treatment by Pressure Processes

1.2 SUBMITTALS

Government approval is required for submittals with a "G" designation; submittals not having a "G" designation are for Contractor Quality Control approval. The following shall be submitted in accordance with Section 01 33 00 SUBMITTAL PROCEDURES:

SD-02 Shop Drawings

Preliminary one line drawings of project rendering; G

Preliminary drawing indicating layout and text content; G

SD-04 Samples

Final rendering sample; G

Final framed rendering and copies; G

1.3 QUALITY ASSURANCE

1.3.1 Rendering

Provide the project rendering in accordance with the following drawing stages as required in paragraph entitled "Submittals". The following submittal data is required to properly identify the appropriate view and approve the final rendering of the facility. The final painted rendering will be used to produce the image for the signboard and framed photographic copies provided to the Contracting Officer.

1.3.1.1 Preliminary One Line Drawings

Provide three different views of the facility in a preliminary single line drawing (black and white) format. These three views will represent the best angles at which to view the proposed facility showing the best design features and the three dimensional character of the facility.

1.3.1.2 Final Rendering Sample

Provide a photographic copy (8 by 10 inches minimum size) of final rendering for approval of color, landscaping, and foreground/background development prior to final submittal.

1.3.1.3 Final Framed Rendering and Copies

Provide final full color rendering of the proposed facility as specified.

1.4 PROJECT SIGN

Prior to initiating any work on site, provide one project identification sign at the location designated. Construct the sign in accordance with project sign detail, which can be downloaded at: http://www.wbdg.org/ccb/NAVGRAPH/graphtoc.pdf. Maintain sign throughout the life of the project. Upon completion of the project, remove the sign from the site. Provide color rendering of the project. Reproduce the rendering on the signboard or enclose a copy of the rendering under a water-proof, transparent cover, and caulk for weather protection.

1.4.1 Project Identification Signboard (Navy)

A project identification signboard shall be provided in accordance with attached Plates 1, 3, and 4. Provide preliminary drawing indicating layout and text content.The signboard shall be provided at a conspicuous location on the job site where directed by the Contracting Officer.

a. The field of the sign shall consist of a 4 by 8 foot sheet of grade B-B medium density overlaid exterior plywood.

b. Lumber shall be B or better Southern pine, pressure-preservative treated in accordance with AWPA C1 and AWPA C2. Nails shall be aluminum or galvanized steel.

c. The entire signboard and supports shall be given one coat of exterior alkyd primer and two coats of exterior alkyd enamel paint. The lettering and sign work shall be performed by a skilled sign painter using paint known in the trade as bulletin colors. The colors, lettering sizes, and lettering styles shall be as indicated. Where preservative-treated lumber is required, utilize only cured pressure-treated wood which has had the chemicals leached from the surface of the wood prior to painting.

d. Use spray applied automotive quality high gloss acrylic white enamel paint as background for the NAVFAC logo. NAVFAC logo shall be an applied 2 mil film sticker/decal with either transparent or white background or paint the logo by stencil onto the sign. The weather resistant sticker/decal film shall be rated for a minimum of 2-year exterior vertical exposure. The self-adhering sticker shall be mounted to the sign with pressure sensitive, permanent acrylic adhesive. Shop cut sticker/decal to rectangular shape and provide pull-off backing sheet on adhesive side of design sticker for shipping.

e. Sign paint colors (manufacturer's numbers/types listed below for color identification only)

    1. Blue = To match dark blue color in the NAVFAC logo.

2. White = To match Brilliant White color in the NAVFAC logo.

f. NAVFAC logo must retain proportions and design integrity. NAVFAC logos in electronic format may be obtained from the NAVFAC web portal via the following link:
https://portal.navfac.navy.mil/portal/page?_pageid=181,3465071&_dad=portal&_schema=p
Use the following to choose color values for the paint to be used:

1. Dark Blue = equivalent to CMYK values 100, 72, 0, 8 .

2. Light Blue = equivalent to CMYK values 69, 34, 0, 0.

3. Cyan = equivalent to CMYK values 100, 9, 0, 6.

4. Yellow = equivalent to CMYK values 0.9,94, 0.

PART 2 PRODUCTS

Not Used

PART 3 EXECUTION

Not Used

-- End of Section --

VERIFY W/ CONTRACTING OFFICER IF PROJECT IS AN ARRA PROJECT. FOR ARRA PROJECTS, ADD SIGNAGE AT TOP OF SIGN. SEE PLATES 8 AND 9 FOR SIGNAGE AND DETAILS.

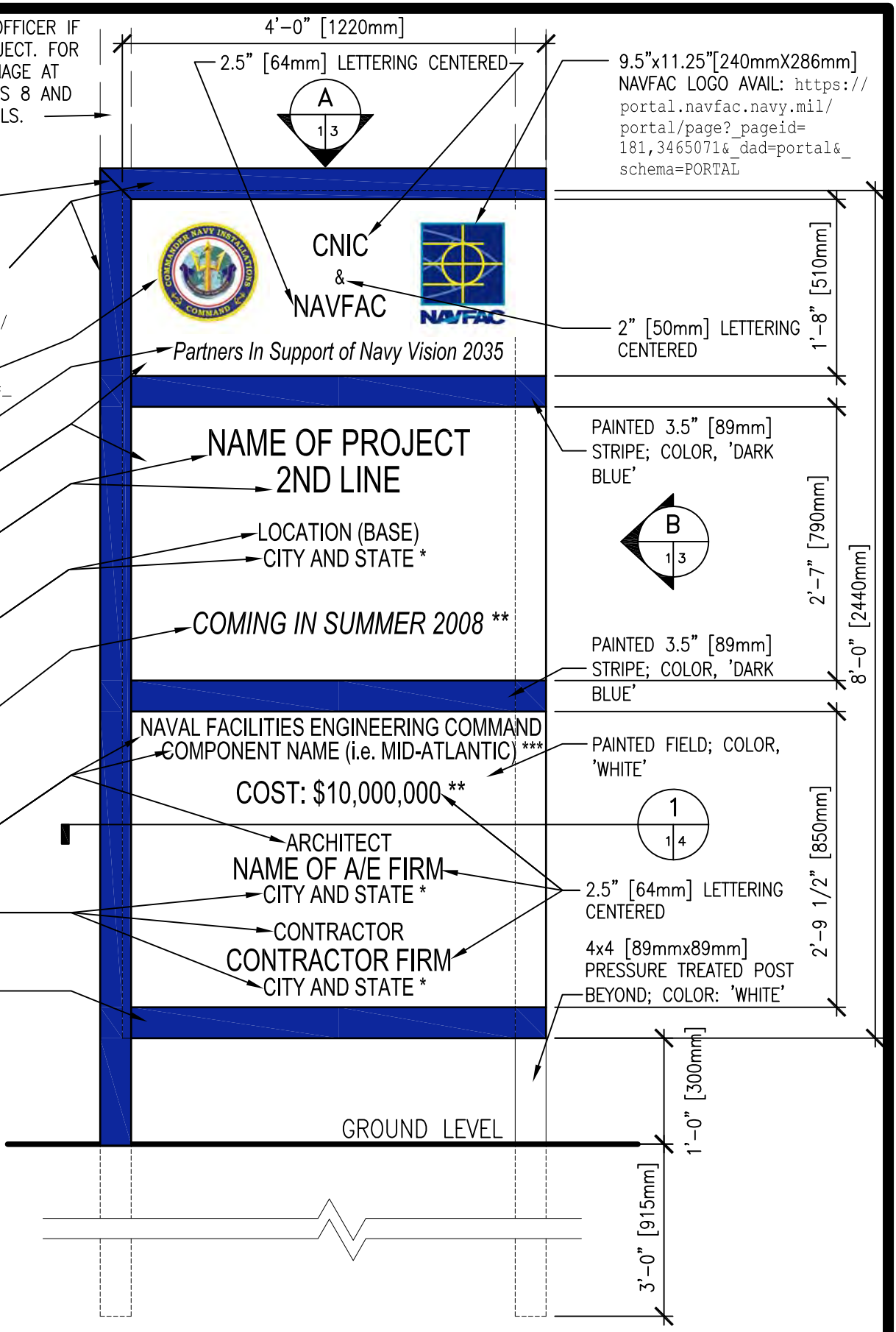

NOTES:

1. PAINT ALL OTHER WOOD SURFACES WITH ONE COAT EXT. PRIMER AND TWO COATS GLOSS WHITE ENAMEL.
2. ALL LETTERING SHALL BE EVENLY SPACED.
3. LETTER STYLE, 'ARIAL', COLOR 'DARK BLUE'. TYPICAL FOR ALL LETTERING.

*–ABBREVIATE STATE
**–CONFIRM USE WITH CONTRACTING OFFICER
***–VERIFY NAME WITH CONTRACTING OFFICER.

PROJECT IDENTIFICATION SIGNBOARD

SCALE: 3/4" = 1'-0"

PLATE 1

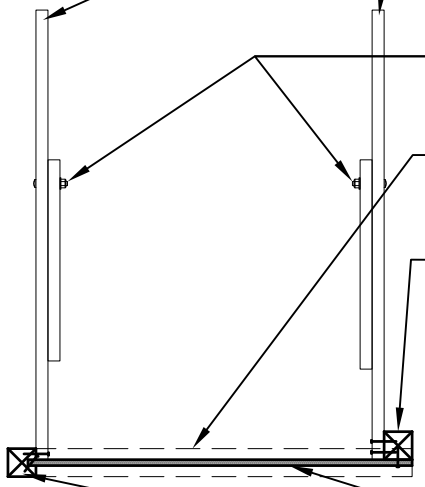

A 1,2 3

TOP VIEW

SCALE: 1/2" = 1'-0"

NOTES:
1. POSTS AND BRACES SHALL BE PRESSURE TREATED.
2. ALL FASTENERS SHALL BE ZINC COATED.
3. BRACING IS REQUIRED IN ALL SOIL CONDITIONS AND HIGH WIND ENVIRONMENTS.

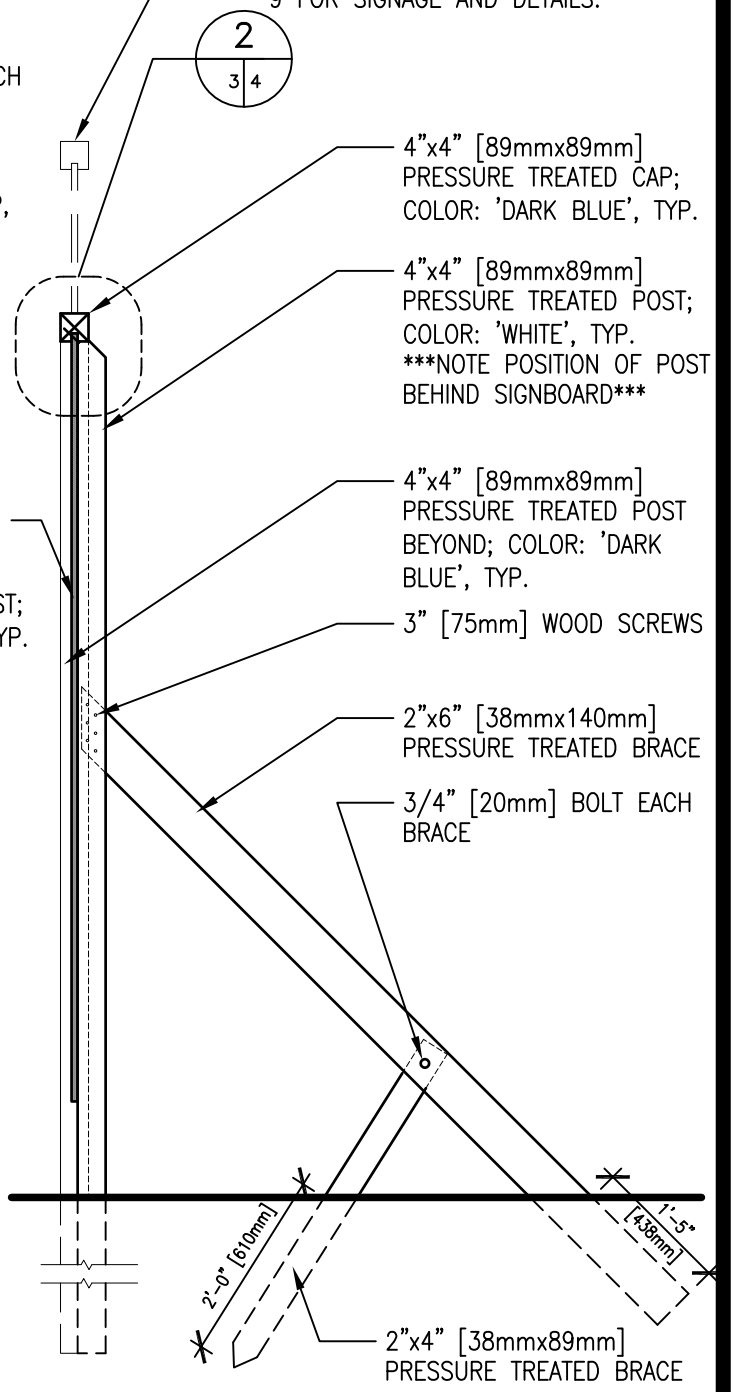

B 1,2 3

SIDE VIEW

SCALE: 1/2" = 1'-0"

PROJECT IDENTIFICATION SIGNBOARD SUPPORT DETAILS

PLATE 3

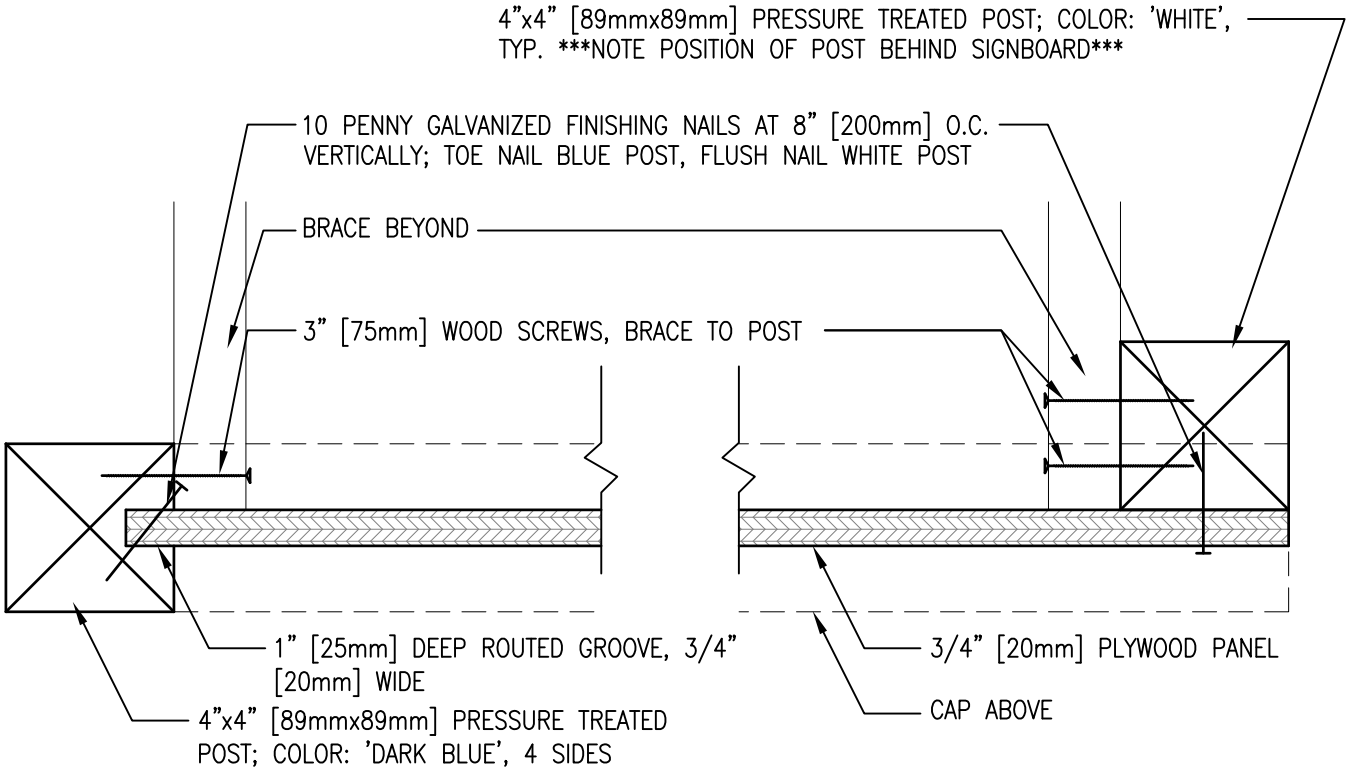

1 PLAN SECTION

1,2 | 4

SCALE: 3" = 1'-0"

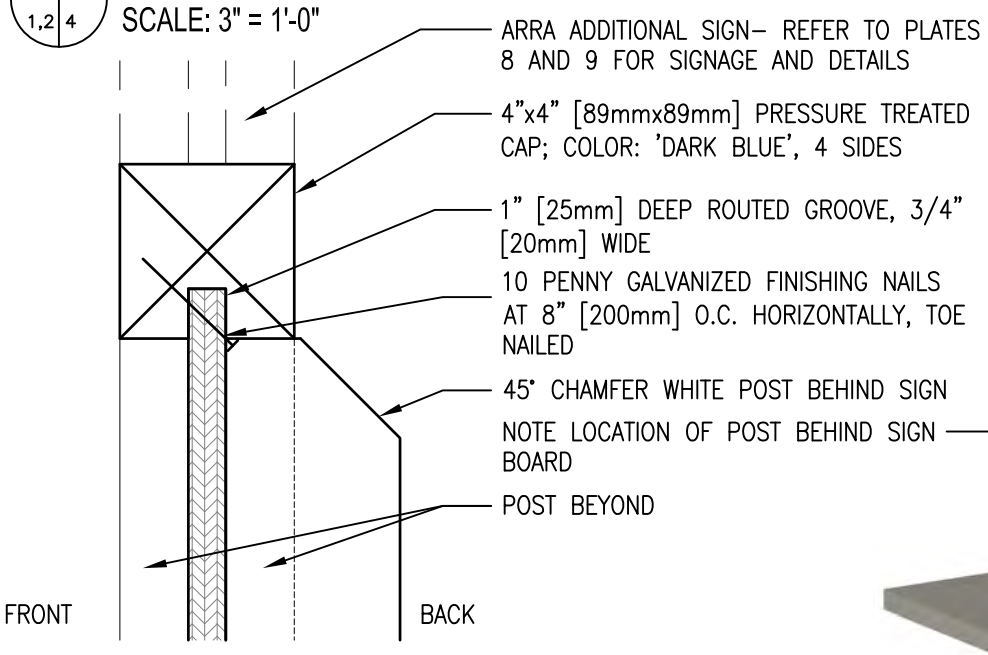

2 SECTION AT TOP

1,2 | 4

SCALE: 3" = 1'-0"

3 ISO VIEW

2 | 4

SCALE: NONE

PROJECT IDENTIFICATION SIGNBOARD SECTIONS

PLATE 4

DEFENSE LOGISTICS AGENCY PROJECT
IN PARTNERSHIP WITH
NAVAL FACILITIES ENGINEERING COMMAND
AND THE UNITED STATES NAVY

P-1515
Replace and Alter Fuel Distribution Facilities
DFSP Craney Island, VA

LOGISTICS
DEFENSE
AGENCY

NAVFAC

Naval Facilities Engineering Command

NAVFAC MID-ATLANTIC

SECTION 01 62 35

RECYCLED/RECOVERED/BIOBASED MATERIALS

05/13

PART 1 GENERAL

1.1 REFERENCES

The publications listed below form a part of this specification to the extent referenced. The publications are referred to within the text by the basic designation only.

U.S. NATIONAL ARCHIVES AND RECORDS ADMINISTRATION (NARA)

40 CFR 247	Comprehensive Procurement Guideline for Products Containing Recovered Materials
48 CFR 23	Environment, Energy and Water Efficiency, Renewable Energy Technologies, Occupational Safety, and Drug-Free Workplace

1.2 OBJECTIVES

Government procurement policy is to acquire, in a cost effective manner, items containing the highest percentage of recycled, recovered and biobased materials practicable consistent with maintaining a satisfactory level of competition without adversely affecting performance requirements or exposing suppliers' employees to undue hazards from the recovered materials. The Environmental Protection Agency (EPA) and the United States Department of Agriculture (USDA) have designated certain items which must contain a specified percent range of recovered or recycled materials. EPA and USDA designated products specified in this contract comply with the stated policy and with the EPA and USDA guidelines. Make all reasonable efforts to use recycled, recovered and biobased materials in providing the EPA and USDA designated products and in otherwise utilizing recycled, recovered and biobased materials in the execution of the work.

1.3 SUBMITTALS

Government approval is required for submittals with a "G" designation; submittals not having a "G" designation are for Contractor Quality Control approval. When used, a designation following the "G" designation identifies the office that will review the submittal for the Government. Submit the following in accordance with Section 01 33 00 SUBMITTAL PROCEDURES:

SD-01 Preconstruction Submittals

Biobased Products; G

1.4 DESIGNATED ITEMS INCORPORATED IN THE WORK

Various sections of the specifications contain requirements for materials that have been designated by EPA and USDA as being products which are or

can be made with recovered or recycled and biobased materials. These items, when incorporated into the work under this contract, shall contain at least the specified percentage of recycled or recovered materials or biobased unless adequate justification (non-availability) for non-use is provided. When a designated item is specified as an option to a non-designated item, the designated item requirements apply only if the designated item is used in the work.

1.5 PROPOSED ITEMS INCORPORATED IN THE WORK

Products other than those designated by EPA and USDA are still being researched and are being considered for future Comprehensive Procurement Guideline (CPG) and USDA's Federal Procurement Preferences (FPP) designations. It is recommended that these items, when incorporated in the work under this contract, contain the highest practicable percentage of recycled, recovered and biobased materials, provided specified requirements are also met.

1.6 LISTED ITEMS USED IN CONDUCT OF THE WORK BUT NOT INCORPORATED IN THE WORK

Many products listed in 40 CFR 247 and 48 CFR 23 have been designated or proposed by EPA and USDA to include recycled, recovered and biobased materials that may be used by the Contractor in performing the work but will not be incorporated into the work. These products include office products, temporary traffic control products, and pallets. It is recommended that these non-construction products, when used in the conduct of the work, contain the highest practicable percentage of recycled, recovered and biobased materials and that these products be recycled when no longer needed.

1.7 BIOPREFERRED FPP

Utilize products and material made from biobased materials to the maximum extent possible without jeopardizing the intended end use or detracting from the overall quality delivered to the end user. All supplies and materials shall be of a type and quality that conform to applicable specifications and standards.

Biobased products that are designated for preferred procurement under USDA’s BioPreferred program must meet the required minimum biobased content. Refer to http://www.biopreferred.gov/ProductCategories.aspx for the product categories and http://www.biopreferred.gov/bioPreferredCatalog/faces/jsp/catalogLanding.jsp for the BioPreferred Catalog. Submit data for the biobased products to include biobased content and source of biobased material; indicating the name of the manufacturer, cost of each material, and the intended use of each of the materials that are to be used in carrying out the requirements of the contract.

PART 2 PRODUCTS

Not Used

PART 3 EXECUTION

Not Used

-- End of Section --

SECTION 01 74 19

CONSTRUCTION AND DEMOLITION WASTE MANAGEMENT
01/07

PART 1 GENERAL

1.1 REFERENCES

The publications listed below form a part of this specification to the extent referenced. The publications are referred to within the text by the basic designation only.

ASTM INTERNATIONAL (ASTM)

ASTM E1609	(2001) Development and Implementation of a Pollution Prevention Program

1.2 GOVERNMENT POLICY

Government policy is to apply sound environmental principles in the design, construction and use of facilities. As part of the implementation of that policy: (1) practice efficient waste management when sizing, cutting, and installing products and materials and (2) use all reasonable means to divert construction and demolition waste from landfills and incinerators and to facilitate their recycling or reuse. A minimum of 50 percent by weight of total non-hazardous demolition and construction project solid waste, excluding land clearing debris and excavated soil, shall be diverted from the landfill.

1.3 MANAGEMENT

Develop and implement a waste management program in accordance with ASTM E1609 and as specified. Take a pro-active, responsible role in the management of construction and demolition waste and require all subcontractors, vendors, and suppliers to participate in the effort. The Environmental Manager, as specified in Section 01 35 40.00 20 Environmental Management, shall be responsible for instructing workers and overseeing and documenting results of the Waste Management Plan for the project. Construction and demolition waste includes products of demolition or removal, excess or unusable construction materials, packaging materials for construction products, and other materials generated during the construction process but not incorporated into the work. In the management of waste consideration shall be given to the availability of viable markets, the condition of the material, the ability to provide the material in suitable condition and in a quantity acceptable to available markets, and time constraints imposed by internal project completion mandates. The Contractor is responsible for implementation of any special programs involving rebates or similar incentives related to recycling of waste. Revenues or other savings obtained for salvage, or recycling accrue to the Contractor. Appropriately permit firms and facilities used for recycling, reuse, and disposal for the intended use to the extent required by federal, state, and local regulations. Also, provide on-site instruction of appropriate separation, handling, recycling, salvage, reuse, and return methods to be used by all parties at the appropriate stages of the project.

1.4 SUBMITTALS

Government approval is required for submittals with a "G" designation; submittals not having a "G" designation are for Contractor Quality Control approval. When used, a designation following the "G" designation identifies the office that will review the submittal for the Government. The following shall be submitted in accordance with Section 01 33 00 SUBMITTAL PROCEDURES:

SD-01 Preconstruction Submittals

Waste Management Plan; G

SD-11 Closeout Submittals

Records

1.5 MEETINGS

Conduct Construction Waste Management meetings. After award of the Contract and prior to commencement of work, schedule and conduct a meeting with the Contracting Officer to discuss the proposed Waste Management Plan and to develop a mutual understanding relative to the details of waste management. The requirements for this meeting may be fulfilled during the coordination and mutual understanding meeting outlined in Section 01 45 00.00 20 QUALITY CONTROL. At a minimum, environmental and waste management goals and issues shall be discussed at the following additional meetings:

a. Pre-bid meeting.

b. Preconstruction meeting.

c. Regular QC meetings.

d. Work safety meetings.

1.6 WASTE MANAGEMENT PLAN

A waste management plan shall be submitted within 15 days after contract award and not less than 10 days before the preconstruction meeting. The plan shall demonstrate how the project waste diversion goal shall be met and shall include the following:

a. Name of individuals on the Contractor's staff responsible for waste prevention and management.

b. Actions that will be taken to reduce solid waste generation, including coordination with subcontractors to ensure awareness and participation.

c. Description of the regular meetings to be held to address waste management.

d. Description of the specific approaches to be used in recycling/reuse of the various materials generated, including the areas on site and equipment to be used for processing, sorting, and temporary storage of wastes.

e. Characterization, including estimated types and quantities, of the

waste to be generated.

f. Name of landfill and/or incinerator to be used and the estimated costs for use, assuming that there would be no salvage or recycling on the project.

g. Identification of local and regional reuse programs, including non-profit organizations such as schools, local housing agencies, and organizations that accept used materials such as materials exchange networks and Habitat for Humanity. Include the name, location, and phone number for each reuse facility to be used, and provide a copy of the permit or license for each facility.

h. List of specific waste materials that will be salvaged for resale, salvaged and reused on the current project, salvaged and stored for reuse on a future project, or recycled. Recycling facilities that will be used shall be identified by name, location, and phone number, including a copy of the permit or license for each facility.

i. Identification of materials that cannot be recycled/reused with an explanation or justification, to be approved by the Contracting Officer.

j. Description of the means by which any waste materials identified in item (h) above will be protected from contamination.

k. Description of the means of transportation of the recyclable materials (whether materials will be site-separated and self-hauled to designated centers, or whether mixed materials will be collected by a waste hauler and removed from the site).

l. Anticipated net cost savings determined by subtracting Contractor program management costs and the cost of disposal from the revenue generated by sale of the materials and the incineration and/or landfill cost avoidance.

Revise and resubmit Plan as required by the Contracting Officer. Approval of Contractor's Plan will not relieve the Contractor of responsibility for compliance with applicable environmental regulations or meeting project cumulative waste diversion requirement. Distribute copies of the Waste Management Plan to each subcontractor, the Quality Control Manager, and the Contracting Officer.

1.7 RECORDS

Records shall be maintained to document the quantity of waste generated; the quantity of waste diverted through sale, reuse, or recycling; and the quantity of waste disposed by landfill or incineration. Quantities may be measured by weight or by volume, but must be consistent throughout. List each type of waste separately noting the disposal or diversion rate. Identify the landfill, recycling center, waste processor, or other organization used to process or receive the solid waste. Provide explanations for any waste not recycled or reused. With each application for payment, submit updated documentation for solid waste disposal and diversion, and submit manifests, weight tickets, receipts, and invoices specifically identifying the project and waste material. The records shall be made available to the Contracting Officer during construction, and a copy of the records shall be delivered to the Contracting Officer upon completion of construction included in the Sustainability Notebook.

1.8 COLLECTION

Separate, store, protect, and handle at the site identified recyclable and salvageable waste products in a manner that maximizes recyclability and salvagability of identified materials. Provide the necessary containers, bins and storage areas to facilitate effective waste management and clearly and appropriately identify them. Provide materials for barriers and enclosures around recyclable material storage areas which are nonhazardous and recyclable or reusable. Locate out of the way of construction traffic. Provide adequate space for pick-up and delivery and convenience to subcontractors. Recycling and waste bin areas are to be kept neat and clean, and recyclable materials shall be handled to prevent contamination of materials from incompatible products and materials. Clean contaminated materials prior to placing in collection containers. Use cleaning materials that are nonhazardous and biodegradable. Handle hazardous waste and hazardous materials in accordance with applicable regulations and coordinate with Section 01 35 40.00 20 ENVIRONMENTAL MANAGEMENT and Section 01 57 20.00 10 ENVIRONMENTAL PROTECTION. Separate materials by one of the following methods:

1.8.1 Source Separated Method

Waste products and materials that are recyclable shall be separated from trash and sorted as described below into appropriately marked separate containers and then transported to the respective recycling facility for further processing. Deliver materials in accordance with recycling or reuse facility requirements (e.g., free of dirt, adhesives, solvents, petroleum contamination, and other substances deleterious to the recycling process). Separate materials into the following category types as appropriate to the project waste and to the available recycling and reuse programs in the project area:

a. Land clearing debris.

b. Asphalt.

c. Concrete and masonry.

d. Metal (e.g. banding, stud trim, ductwork, piping, rebar, roofing, other trim, steel, iron, galvanized, stainless steel, aluminum, copper, zinc, lead brass, bronze).

    1. Ferrous.

    2. Non-ferrous.

e. Wood (nails and staples allowed).

f. Debris.

g. Glass (colored glass allowed).

h. Paper.

    1. Bond.

    2. Newsprint.

    3. Cardboard and paper packaging materials.

i. Plastic.

Type	
1	Polyethylene Terephthalate (PET, PETE)
2	High Density Polyethylene (HDPE)
3	Vinyl (Polyvinyl Chloride or PVC)
4	Low Density Polyethylene (LDPE)
5	Polypropylene (PP)
6	Polystyrene (PS)
7.	Other. Use of this code indicates that the package in question is made with a resin other than the six listed above, or is made of more than one resin listed above, and used in a multi-layer combination.

j. Gypsum.

k. Non-hazardous paint and paint cans.

l. Carpet.

m. Ceiling tiles.

n. Insulation.

o. Beverage containers.

1.8.2 Co-Mingled Method

Waste products and recyclable materials shall be placed into a single container and then transported to a recycling facility where the recyclable materials are sorted and processed.

1.8.3 Other Methods

Other methods proposed by the Contractor may be used when approved by the Contracting Officer.

1.9 DISPOSAL

Control accumulation of waste materials and trash. Recycle or dispose of collected materials off-site at intervals approved by the Contracting Officer and in compliance with waste management procedures. Except as otherwise specified in other sections of the specifications, disposal shall be in accordance with the following:

1.9.1 Reuse

First consideration shall be given to salvage for reuse since little or no re-processing is necessary for this method, and less pollution is created when items are reused in their original form. Coordinate reuse with the

Contracting Officer. Reuse materials as indicated on the drawings. Sale or donation of waste suitable for reuse shall be considered.

1.9.2 Recycle

Waste materials not suitable for reuse, but having value as being recyclable, shall be made available for recycling. All fluorescent lamps, HID lamps, and mercury-containing thermostats removed from the site shall be recycled. Arrange for timely pickups from the site or deliveries to recycling facilities in order to prevent contamination of recyclable materials.

1.9.3 Waste

Materials with no practical use or economic benefit shall be disposed at a landfill or incinerator.

1.9.4 Return

Set aside and protect misdelivered and substandard products and materials and return to supplier for credit.

PART 2 PRODUCTS

Not used.

PART 3 EXECUTION

Not used. -- End of Section --

SECTION 01 78 00

CLOSEOUT SUBMITTALS
08/11

PART 1 GENERAL

1.1 REFERENCES

The publications listed below form a part of this specification to the extent referenced. The publications are referred to within the text by the basic designation only.

ASTM INTERNATIONAL (ASTM)

ASTM E1971	(2005; R 2011) Stewardship for the Cleaning of Commercial and Institutional Buildings

1.2 SUBMITTALS

Government approval is required for submittals with a "G" designation; submittals not having a "G" designation are for Contractor Quality Control approval. Submit the following in accordance with Section 01 33 00 SUBMITTAL PROCEDURES:

SD-03 Product Data

As-Built Record of Equipment and Materials

Two copies of the record listing the as-built materials and equipment incorporated into the construction of the project.

Warranty Management Plan

One set of the warranty management plan containing information relevant to the warranty of materials and equipment incorporated into the construction project, including the starting date of warranty of constructon. Furnish with each warranty; the name, address, and telephone number of each of the guarantor's representatives nearest to the project location.

Warranty Tags

Two record copies of the warranty tags showing the layout and design.

Final Cleaning

Two copies of the listing of completed final clean-up items.

Spare Parts Data

Two copies of the list that indicates manufacturer's name, part number, nonmenclature, and stock level recommended for maintenance and repair. List those items that may be standard to the normal maintenance of the system.

SD-08 Manufacturer's Instructions

Preventative Maintenance and Condition Monitoring (Predictive Testing) and Inspection schedules with instructions that state when systems should be retested.

Define within the schedule the anticipated length of each test, test apparatus, number of personnel identified by responsibility, and a testing validation procedure permitting the record operation capability requirements. On each test feature; e.g., gpm, rpm, psi, provide a signoff blank for the Contractor and Contracting Officer. Within remarks column of the testing validation procedure include references to operating limits of time, pressure, temperature, volume, voltage, current, acceleration, velocity, alignment, calibration, adjustments, cleaning, or special system notes. Delineate procedures for preventative maintenance, condition monitoring (predictive testing) and inspection, adjustment, lubrication and cleaning necessary to prevent failure.

Posted Instructions

SD-10 Operation and Maintenance Data

Operation and Maintenance Manuals

Submit Operation and Maintenance Manuals in accordance with paragraph entitled, "Operation and Maintenance", of this section.

SD-11 Closeout Submittals

Record Drawings

Drawings showing final as-built conditions of the project. The drawings must consist of 3 sets of completed final as-built hard copy drawings, and the approved marked working as-built prints. All record drawings shall be submitted with a CD of AutoCAD files.

Certification of EPA Designated Items; G

Form DD1354; G

Checklist for Form DD1354; G

1.3 PROJECT RECORD DOCUMENTS

1.3.1 Record Drawings

This paragraph covers record drawings complete, as a requirement of the contract. The terms "drawings," "contract drawings," "drawing files," "working record drawings" and "final record drawings" refer to contract drawings which are revised to be used for final record drawings showing as-built conditions.

1.3.1.1 Government Furnished Materials

One set of electronic CADD files in the specified software and format revised to reflect all bid amendments will be provided by the Government at the preconstruction conference for projects requiring CADD file record

drawings.

1.3.1.2 Working Record and Final Record Drawings

Revise 2 sets of paper drawings by red-line process to show the as-built conditions during the prosecution of the project. Keep these working as-built marked drawings current on a weekly basis and at least one set available on the jobsite at all times. Changes from the contract plans which are made in the work or additional information which might be uncovered in the course of construction must be accurately and neatly recorded as they occur by means of details and notes. Prepare final record (as-built) drawings after the completion of each definable feature of work as listed in the Contractor Quality Control Plan (Foundations, Utilities, Structural Steel, etc., as appropriate for the project). The working as-built marked prints and final record (as-built) drawings will be jointly reviewed for accuracy and completeness by the Contracting Officer and the Contractor prior to submission of each monthly pay estimate. If the Contractor fails to maintain the working and final record drawings as specified herein, the Contracting Officer will deduct from the monthly progress payment an amount representing the estimated cost of maintaining the record drawings. This monthly deduction will continue until an agreement can be reached between the Contracting Officer and the Contractor regarding the accuracy and completeness of updated drawings. Show on the working and final record drawings , but not limited to, the following information:

a. The actual location, kinds and sizes of all sub-surface utility lines. In order that the location of these lines and appurtenances may be determined in the event the surface openings or indicators become covered over or obscured, show by offset dimensions to two permanently fixed surface features the end of each run including each change in direction on the record drawings. Locate valves, splice boxes and similar appurtenances by dimensioning along the utility run from a reference point. Also record the average depth below the surface of each run.

b. The location and dimensions of any changes within the project limits.

c. Correct grade, elevations, cross section, or alignment of roads, earthwork, structures or utilities if any changes were made from contract plans.

d. Changes in details of design or additional information obtained from working drawings specified to be prepared and/or furnished by the Contractor; including but not limited to fabrication, erection, installation plans and placing details, pipe sizes, insulation material, dimensions of equipment foundations, etc.

e. The topography, invert elevations and grades of drainage installed or affected as part of the project construction.

f. Changes or modifications which result from the final inspection.

g. Where contract drawings or specifications present options, show only the option selected for construction on the final as-built prints.

h. If borrow material for this project is from sources on Government property, or if Government property is used as a spoil area, furnish a contour map of the final borrow pit/spoil area elevations.

i. Systems designed or enhanced by the Contractor.

j. Modifications (include within change order price the cost to change working and final record drawings to reflect modifications) and compliance with the following procedures.

1. Follow directions in the modification for posting descriptive changes.

2. Place a Modification Delta at the location of each deletion.

3. For new details or sections which are added to a drawing, place a Modification Delta by the detail or section title.

4. For minor changes, place a Modification Delta by the area changed on the drawing (each location).

5. For major changes to a drawing, place a Modification Delta by the title of the affected plan, section, or detail at each location.

6. For changes to schedules or drawings, place a Modification Delta either by the schedule heading or by the change in the schedule.

7. The Modification Delta size shall be 1/2 inch diameter unless the area where the circle is to be placed is crowded. Smaller size circle shall be used for crowded areas.

1.3.1.3 Drawing Preparation

Modify the record drawings as may be necessary to correctly show the features of the project as it has been constructed by bringing the contract set into agreement with approved working as-built prints, and adding such additional drawings as may be necessary. These working as-built marked prints must be neat, legible and accurate. These drawings are part of the permanent records of this project and must be returned to the Contracting Officer after approval by the Government. Any drawings damaged or lost by the Contractor must be satisfactorily replaced by the Contractor at no expense to the Government.

1.3.1.4 Computer Aided Design and Drafting (CADD) Drawings

Only employ personnel proficient in the preparation of CADD drawings to modify the contract drawings or prepare additional new drawings. Additions and corrections to the contract drawings must be equal in quality and detail to that of the originals. Line colors, line weights, lettering, layering conventions, and symbols must be the same as the original line colors, line weights, lettering, layering conventions, and symbols. If additional drawings are required, prepare them using the specified electronic file format applying the same graphic standards specified for original drawings. The title block and drawing border to be used for any new final record drawings must be identical to that used on the contract drawings. Accomplish additions and corrections to the contract drawings using CADD files. The Contractor will be furnished "as-designed" drawings in AutoCad Release format compatible with a Windows XP, Windows NT, Windows Vista, or Windows 7 operating system. The electronic files will be supplied on compact disk. Provide all program files and hardware necessary to prepare final record drawings. The Contracting Officer will review final record drawings for accuracy and return them to the Contractor for

required corrections, changes, additions, and deletions.

a. Provide CADD "base" colors of red, green, and blue. Color code for changes as follows:

   1. Deletions (Red) - Over-strike deleted graphic items (lines), lettering in notes and leaders.

   2. Additions (Green) - Added items, lettering in notes and leaders.

   3. Special (Blue) - Items requiring special information, coordination, or special detailing or detailing notes.

b. Rename the Contract Drawing files in a manner related to the contract number (i.e., 98-C-10.DWG) as instructed in the Pre-Construction conference. Use only those renamed files for the Marked-up changes. All changes shall be made on the layer/level as the original item.

c. When final revisions have been completed, show the wording "RECORD DRAWINGS / AS-BUILT CONDITIONS" followed by the name of the Contractor in letters at least 3/16 inch high on the cover sheet drawing. Mark all other contract drawings either "Record" drawing denoting no revisions on the sheet or "Revised Record" denoting one or more revisions. Date original contract drawings in the revision block.

d. Within 20 days for contracts $5 million and above after Government approval of all of the working record drawings for a phase of work, prepare the final CADD record drawings for that phase of work and submit two sets of blue-lined prints of these drawings for Government review and approval. The Government will promptly return one set of prints annotated with any necessary corrections. Within 10 days for contracts $5 million and above revise the CADD files accordingly at no additional cost and submit one set of final prints for the completed phase of work to the Government. Within 20 days for contracts $5 million and above of substantial completion of all phases of work, submit the final record drawing package for the entire project. Submit one set of electronic files on compact disk, read-only memory (CD-ROM), one set of mylars, two sets of blue-line prints and one set of the approved working record drawings. They must be complete in all details and identical in form and function to the contract drawing files supplied by the Government. Any transactions or adjustments necessary to accomplish this is the responsibility of the Contractor. The Government reserves the right to reject any drawing files it deems incompatible with the customer's CADD system. Paper prints, drawing files and storage media submitted will become the property of the Government upon final approval. Failure to submit final record drawing files and marked prints as specified will be cause for withholding any payment due the Contractor under this contract. Approval and acceptance of final record drawings must be accomplished before final payment is made to the Contractor.

1.3.1.5 Payment

No separate payment will be made for record drawings required under this contract, and all costs accrued in connection with such drawings are considered a subsidiary obligation of the Contractor.

1.3.2 As-Built Record of Equipment and Materials

Furnish one copy of preliminary record of equipment and materials used on the project 15 days prior to final inspection. This preliminary submittal will be reviewed and returned 2 days after final inspection with Government comments. Submit two sets of final record of equipment and materials 10 days after final inspection. Key the designations to the related area depicted on the contract drawings. List the following data:

RECORD OF DESIGNATED EQUIPMENT AND MATERIALS DATA				
Description	Specification Section	Manufacturer and Catalog, Model, and Serial Number	Composition and Size	Where Used

1.3.3 Final Approved Shop Drawings

Furnish final approved project shop drawings 30 days after transfer of the completed facility.

1.3.4 Construction Contract Specifications

Furnish final record (as-built) construction contract specifications, including modifications thereto, 30 days after transfer of the completed facility.

1.3.5 Real Property Equipment

Furnish a list of installed equipment furnished under this contract. Include all information usually listed on manufacturer's name plate. In the "EQUIPMENT-IN-PLACE LIST" include, as applicable, the following for each piece of equipment installed: description of item, location (by room number), model number, serial number, capacity, name and address of manufacturer, name and address of equipment supplier, condition, spare parts list, manufacturer's catalog, and warranty. Furnish a draft list at time of transfer. Furnish the final list 30 days after transfer of the completed facility.

1.4 SPARE PARTS DATA

Submit two copies of the Spare Parts Data list.

a. Indicate manufacturer's name, part number, nomenclature, and stock level required for maintenance and repair. List those items that may be standard to the normal maintenance of the system.

b. Supply two items of each part for spare parts inventory. Provision of spare parts does not relieve the Contractor of responsibilities listed under the contract guarantee provisions.

1.5 PREVENTATIVE MAINTENANCE

Submit Preventative Maintenance, Condition Monitoring (Predictive Testing) and Inspection schedules with instructions that state when systems should be retested.

a. Define the anticipated length of each test, test apparatus, number of personnel identified by responsibility, and a testing validation procedure permitting the record operation capability requirements within the schedule. Provide a signoff blank for the Contractor and Contracting Officer for each test feature; e.g., gpm, rpm, psi. Include a remarks column for the testing validation procedure referencing operating limits of time, pressure, temperature, volume, voltage, current, acceleration, velocity, alignment, calibration, adjustments, cleaning, or special system notes. Delineate procedures for preventative maintenance, inspection, adjustment, lubrication and cleaning necessary to minimize corrective maintenance and repair.

b. Repair requirements must inform operators how to check out, troubleshoot, repair, and replace components of the system. Include electrical and mechanical schematics and diagrams and diagnostic techniques necessary to enable operation and troubleshooting of the system after acceptance.

1.6 CERTIFICATION OF EPA DESIGNATED ITEMS

Submit the Certification of EPA Designated Items as required by FAR 52.223-9, "Certification and Estimate of Percentage of Recovered Material Content for EPA Designated Items". Include on the certification form the following information: project name, project number, Contractor name, license number, Contractor address, and certification. The certification will read as follows and be signed and dated by the Contractor. "I hereby certify the information provided herein is accurate and that the requisition/procurement of all materials listed on this form comply with current EPA standards for recycled/recovered materials content. The following exemptions may apply to the non-procurement of recycled/recovered content materials:

a. The product does not meet appropriate performance standards;

b. The product is not available within a reasonable time frame;

c. The product is not available competitively (from two or more sources);

d. The product is only available at an unreasonable price (compared with a comparable non-recycled content product)."

Record each product used in the project that has a requirement or option of containing recycled content in accordance with Section 01 62 35 RECYCLED/RECOVERED/BIOBASED MATERIALS, noting total price, total value of post-industrial recycled content, exemptions (1, 2, 3, or 4, as indicated), and comments. Recycled content values may be determined by weight or volume percent, but must be consistent throughout.

1.7 WARRANTY MANAGEMENT

1.7.1 Warranty Management Plan

Develop a warranty management plan which contains information relevant to the clause Warranty of Construction. At least 30 days before the planned pre-warranty conference, submit the warranty management plan for Government approval. Include within the warranty management plan all required actions and documents to assure that the Government receives all warranties to which it is entitled. The plan must be in narrative form and contain

sufficient detail to render it suitable for use by future maintenance and repair personnel, whether tradesmen, or of engineering background, not necessarily familiar with this contract. The term "status" as indicated below must include due date and whether item has been submitted or was accomplished. Warranty information made available during the construction phase must be submitted to the Contracting Officer for approval prior to each monthly pay estimate. Assemble approved information in a binder and turn over to the Government upon acceptance of the work. The construction warranty period will begin on the date of project acceptance and continue for the full product warranty period. A joint 4 month and 9 month warranty inspection will be conducted, measured from time of acceptance, by the Contractor, Contracting Officer and the Customer Representative. Include within the warranty management plan , but not limited to, the following:

a. Roles and responsibilities of all personnel associated with the warranty process, including points of contact and telephone numbers within the organizations of the Contractors, subContractors, manufacturers or suppliers involved.

b. Listing and status of delivery of all Certificates of Warranty for extended warranty items, to include roofs, HVAC balancing, pumps, motors, transformers, and for all commissioned systems such as fire protection and alarm systems, sprinkler systems, lightning protection systems, etc.

c. A list for each warranted equipment, item, feature of construction or system indicating:

    1. Name of item.
    2. Model and serial numbers.
    3. Location where installed.
    4. Name and phone numbers of manufacturers or suppliers.
    5. Names, addresses and telephone numbers of sources of spare parts.
    6. Warranties and terms of warranty. Include one-year overall warranty of construction, including the starting date of warranty of construction. Items which have extended warranties must be indicated with separate warranty expiration dates.
    7. Cross-reference to warranty certificates as applicable.
    8. Starting point and duration of warranty period.
    9. Summary of maintenance procedures required to continue the warranty in force.
    10. Cross-reference to specific pertinent Operation and Maintenance manuals.
    11. Organization, names and phone numbers of persons to call for warranty service.
    12. Typical response time and repair time expected for various warranted equipment.

d. The Contractor's plans for attendance at the 4 and 9 month post-construction warranty inspections conducted by the Government.

e. Procedure and status of tagging of all equipment covered by extended warranties.

f. Copies of instructions to be posted near selected pieces of equipment where operation is critical for warranty and/or safety reasons.

1.7.2 Performance Bond

The Contractor's Performance Bond must remain effective throughout the construction period.

a. In the event the Contractor fails to commence and diligently pursue any construction warranty work required, the Contracting Officer will have the work performed by others, and after completion of the work, will charge the remaining construction warranty funds of expenses incurred by the Government while performing the work, including, but not limited to administrative expenses.

b. In the event sufficient funds are not available to cover the construction warranty work performed by the Government at the Contractor's expense, the Contracting Officer will have the right to recoup expenses from the bonding company.

c. Following oral or written notification of required construction warranty repair work, respond in a timely manner. Written verification will follow oral instructions. Failure of the Contractor to respond will be cause for the Contracting Officer to proceed against the Contractor.

1.7.3 Pre-Warranty Conference

Prior to contract completion, and at a time designated by the Contracting Officer, meet with the Contracting Officer to develop a mutual understanding with respect to the requirements of this section. Communication procedures for Contractor notification of construction warranty defects, priorities with respect to the type of defect, reasonable time required for Contractor response, and other details deemed necessary by the Contracting Officer for the execution of the construction warranty will be established/reviewed at this meeting. In connection with these requirements and at the time of the Contractor's quality control completion inspection, furnish the name, telephone number and address of a licensed and bonded company which is authorized to initiate and pursue construction warranty work action on behalf of the Contractor. This point of contact will be located within the local service area of the warranted construction, be continuously available, and be responsive to Government inquiry on warranty work action and status. This requirement does not relieve the Contractor of any of its responsibilities in connection with other portions of this provision.

1.7.4 Contractor's Response to Construction Warranty Service Requirements

Following oral or written notification by the Contracting Officer, respond to construction warranty service requirements in accordance with the "Construction Warranty Service Priority List" and the three categories of priorities listed below. Submit a report on any warranty item that has been repaired during the warranty period. Include within the report the cause of the problem, date reported, corrective action taken, and when the repair was completed. If the Contractor does not perform the construction warranty within the timeframes specified, the Government will perform the work and backcharge the construction warranty payment item established.

a. First Priority Code 1. Perform onsite inspection to evaluate situation, and determine course of action within 4 hours, initiate work within 6 hours and work continuously to completion or relief.

b. Second Priority Code 2. Perform onsite inspection to evaluate situation, and determine course of action within 8 hours, initiate work within 24 hours and work continuously to completion or relief.

c. Third Priority Code 3. All other work to be initiated within 3 work days and work continuously to completion or relief.

d. The "Construction Warranty Service Priority List" is as follows:

Code 1-Automated Fuel Handling Equipment

Code 1-Valves and Related Equipment

Code 3-Lighting and CCTV Systems

Code 1-Pumps and Related Equipment

Code 2-Electrical - Power failure

1.7.5 Warranty Tags

At the time of installation, tag each warranted item with a durable, oil and water resistant tag approved by the Contracting Officer. Attach each tag with a copper wire and spray with a silicone waterproof coating. The date of acceptance and the QC signature must remain blank until the project is accepted for beneficial occupancy. Show the following information on the tag.

Type of product/material	
Model number	
Serial number	
Contract number	
Warranty period from/to	
Inspector's signature	
Construction Contractor	
Address	
Telephone number	
Warranty contact	
Address	
Telephone number	
Warranty response time priority code	

WARNING - PROJECT PERSONNEL TO PERFORM ONLY OPERATIONAL MAINTENANCE DURING THE WARRANTY PERIOD.

1.8 OPERATION AND MAINTENANCE MANUALS

Operation and Maintenance Manuals must be consistent with the manufacturer's standard brochures, schematics, printed instructions, general operating procedures, and safety precautions. Bind information in manual format and grouped by technical sections. Test data must be legible and of good quality. Light-sensitive reproduction techniques are acceptable provided finished pages are clear, legible, and not subject to fading. Pages for vendor data and manuals must have 0.3937-inch holes and be bound in 3-ring, loose-leaf binders. Organize data by separate index and tabbed sheets, in a loose-leaf binder. Binder must lie flat with printed sheets that are easy to read. Caution and warning indications must be clearly labeled.

Submit classroom and field instructions in the operation and maintenance of systems equipment where required by the technical provisions. These services must be directed by the Contractor, using the manufacturer's factory-trained personnel or qualified representatives. Contracting Officer will be given 7 calendar days written notice of scheduled instructional services. Instructional materials belonging to the manufacturer or vendor, such as lists, static exhibits, and visual aids, must be made available to the Contracting Officer.

Submit 6 copies of the project operation and maintenance manuals 30 calendar days prior to testing the system involved. Update and resubmit data for final approval no later than 30 calendar days prior to contract completion.

1.8.1 Configuration

Operation and Maintenance Manuals must be consistent with the manufacturer's standard brochures, schematics, printed instructions, general operating procedures, and safety precautions. Bind information in manual format and grouped by technical sections. Test data must be legible and of good quality. Light-sensitive reproduction techniques are acceptable provided finished pages are clear, legible, and not subject to fading. Pages for vendor data and manuals must have 0.3937-inch holes and be bound in 3-ring, loose-leaf binders. Organize data by separate index and tabbed sheets, in a loose-leaf binder. Binder must lie flat with printed sheets that are easy to read. Caution and warning indications must be clearly labeled.

1.8.2 Training and Instruction

Submit classroom and field instructions in the operation and maintenance of systems equipment where required by the technical provisions. These services must be directed by the Contractor, using the manufacturer's factory-trained personnel or qualified representatives. Contracting Officer will be given 7 calendar days written notice of scheduled instructional services. Instructional materials belonging to the manufacturer or vendor, such as lists, static exhibits, and visual aids, must be made available to the Contracting Officer.

1.9 CLEANUP

Provide final cleaning in accordance with ASTM E1971. Leave premises "broom clean." Use only nonhazardous cleaning materials in the final cleanup. Clean debris from site. Sweep paved areas and rake clean landscaped areas. Remove waste and surplus materials, rubbish and construction facilities from the site. Recycle, salvage, and return construction and demolition waste from project in accordance with the Waste Management Plan. Promptly and legally transport and dispose of any trash. Do not burn, bury, or otherwise dispose of trash on the project site.

1.10 REAL PROPERTY RECORD

Near the completion of Project, but a minimum of 60 days prior to final acceptance of the work, complete, update draft DD Form 1354 attached to this section, and submit an accounting of all installed property with Form DD1354 "Transfer and Acceptance of Military Real Property." Include any additional assets/improvements/alterations from the DD Form 1354. Contact the Contracting Officer for any project specific information necessary to complete the DD Form 1354. For information purposes, a blank DD Form 1354 (fill-able) in ADOBE (PDF) may be obtained at the following web site:
http://www.dtic.mil/whs/directives/infomgt/forms/eforms/dd1354.pdf

Submit the completed Checklist for Form DD1354 of Government-furnished and Contractor-furnished/Contractor-Installed items. Attach this list to the updated DD Form 1354.

PART 2 PRODUCTS

Not Used

PART 3 EXECUTION

Not Used

-- End of Section --

SECTION 01 78 23

OPERATION AND MAINTENANCE DATA
07/06

PART 1 GENERAL

1.1 REFERENCES

The publications listed below form a part of this specification to the extent referenced. The publications are referred to within the text by the basic designation only.

ASTM INTERNATIONAL (ASTM)

ASTM E1971	(2005; R 2011) Stewardship for the Cleaning of Commercial and Institutional Buildings

1.2 SUBMISSION OF OPERATION AND MAINTENANCE DATA

Submit Operation and Maintenance (O&M) Data specifically applicable to this contract and a complete and concise depiction of the provided equipment, product, or system, stressing and enhancing the importance of system interactions, troubleshooting, and long-term preventative maintenance and operation. The subcontractors must compile and prepare data and deliver to the Contractor prior to the training of Government personnel. The Contractor must compile and prepare aggregate O&M data including clarifying and updating the original sequences of operation to as-built conditions. Organize and present information in sufficient detail to clearly explain O&M requirements at the system, equipment, component, and subassembly level. Include an index preceding each submittal. Submit in accordance with this section and Section 01 33 00 SUBMITTAL PROCEDURES.

1.2.1 Package Quality

Documents must be fully legible. Poor quality copies and material with hole punches obliterating the text or drawings will not be accepted.

1.2.2 Package Content

Data package content shall be as shown in the paragraph titled "Schedule of Operation and Maintenance Data Packages." Comply with the data package requirements specified in the individual technical sections, including the content of the packages and addressing each product, component, and system designated for data package submission, except as follows. Commissioned items without a specified data package requirement in the individual technical sections must use Data Package 5. Commissioned items with a Data Package 1 or 2 requirement must use instead Data Package 5.

1.2.3 Changes to Submittals

Manufacturer-originated changes or revisions to submitted data must be furnished by the Contractor if a component of an item is so affected subsequent to acceptance of the O&M Data. Submit changes, additions, or revisions required by the Contracting Officer for final acceptance of submitted data within 30 calendar days of the notification of this change requirement.

1.2.4 Review and Approval

The Government's Commissioning Authority (CA) must review the commissioned systems and equipment submittals for completeness and applicability. The Government must verify that the systems and equipment provided meet the requirements of the Contract documents and design intent, particularly as they relate to functionality, energy performance, water performance, maintainability, sustainability, system cost, indoor environmental quality, and local environmental impacts. This work is in addition to the normal review procedures for O&M data.

1.3 TYPES OF INFORMATION REQUIRED IN O&M DATA PACKAGES

1.3.1 Operating Instructions

Include specific instructions, procedures, and illustrations for the following phases of operation for the installed model and features of each system:

1.3.1.1 Safety Precautions

List personnel hazards and equipment or product safety precautions for all operating conditions.

1.3.1.2 Operator Prestart

Include procedures required to install, set up, and prepare each system for use.

1.3.1.3 Startup, Shutdown, and Post-Shutdown Procedures

Provide narrative description for Startup, Shutdown and Post-shutdown operating procedures including the control sequence for each procedure.

1.3.1.4 Normal Operations

Provide narrative description of Normal Operating Procedures. Include Control Diagrams with data to explain operation and control of systems and specific equipment.

1.3.1.5 Emergency Operations

Include Emergency Procedures for equipment malfunctions to permit a short period of continued operation or to shut down the equipment to prevent further damage to systems and equipment. Include Emergency Shutdown Instructions for fire, explosion, spills, or other foreseeable contingencies. Provide guidance and procedures for emergency operation of all utility systems including required valve positions, valve locations and zones or portions of systems controlled.

1.3.1.6 Operator Service Requirements

Include instructions for services to be performed by the operator such as lubrication, adjustment, inspection, and recording gage readings.

1.3.1.7 Environmental Conditions

Include a list of Environmental Conditions (temperature, humidity, and

other relevant data) that are best suited for the operation of each product, component or system. Describe conditions under which the item equipment should not be allowed to run.

1.3.2 Preventive Maintenance

Include the following information for preventive and scheduled maintenance to minimize corrective maintenance and repair for the installed model and features of each system. Include potential environmental and indoor air quality impacts of recommended maintenance procedures and materials.

1.3.2.1 Lubrication Data

Include preventative maintenance lubrication data, in addition to instructions for lubrication provided under paragraph titled "Operator Service Requirements":

a. A table showing recommended lubricants for specific temperature ranges and applications.

b. Charts with a schematic diagram of the equipment showing lubrication points, recommended types and grades of lubricants, and capacities.

c. A Lubrication Schedule showing service interval frequency.

1.3.2.2 Preventive Maintenance Plan and Schedule

Include manufacturer's schedule for routine preventive maintenance, inspections, tests and adjustments required to ensure proper and economical operation and to minimize corrective maintenance. Provide manufacturer's projection of preventive maintenance work-hours on a daily, weekly, monthly, and annual basis including craft requirements by type of craft. For periodic calibrations, provide manufacturer's specified frequency and procedures for each separate operation.

1.3.2.3 Cleaning Recommendations

Provide environmentally preferable cleaning recommendations in accordance with ASTM E1971.

1.3.3 Corrective Maintenance (Repair)

Include manufacturer's recommended procedures and instructions for correcting problems and making repairs for the installed model and features of each system. Include potential environmental and indoor air quality impacts of recommended maintenance procedures and materials.

1.3.3.1 Troubleshooting Guides and Diagnostic Techniques

Include step-by-step procedures to promptly isolate the cause of typical malfunctions. Describe clearly why the checkout is performed and what conditions are to be sought. Identify tests or inspections and test equipment required to determine whether parts and equipment may be reused or require replacement.

1.3.3.2 Wiring Diagrams and Control Diagrams

Wiring diagrams and control diagrams shall be point-to-point drawings of wiring and control circuits including factory-field interfaces. Provide a

complete and accurate depiction of the actual job specific wiring and control work. On diagrams, number electrical and electronic wiring and pneumatic control tubing and the terminals for each type, identically to actual installation configuration and numbering.

1.3.3.3 Maintenance and Repair Procedures

Include instructions and a list of tools required to repair or restore the product or equipment to proper condition or operating standards.

1.3.3.4 Removal and Replacement Instructions

Include step-by-step procedures and a list required tools and supplies for removal, replacement, disassembly, and assembly of components, assemblies, subassemblies, accessories, and attachments. Provide tolerances, dimensions, settings and adjustments required. Instructions shall include a combination of text and illustrations.

1.3.3.5 Spare Parts and Supply Lists

Include lists of spare parts and supplies required for maintenance and repair to ensure continued service or operation without unreasonable delays. Special consideration is required for facilities at remote locations. List spare parts and supplies that have a long lead-time to obtain.

1.3.4 Corrective Maintenance Work-Hours

Include manufacturer's projection of corrective maintenance work-hours including requirements by type of craft. Corrective maintenance that requires completion or participation of the equipment manufacturer shall be identified and tabulated separately.

1.3.5 Appendices

Provide information required below and information not specified in the preceding paragraphs but pertinent to the maintenance or operation of the product or equipment. Include the following:

1.3.5.1 Product Submittal Data

Provide a copy of all SD-03 Product Data submittals required in the applicable technical sections.

1.3.5.2 Manufacturer's Instructions

Provide a copy of all SD-08 Manufacturer's Instructions submittals required in the applicable technical sections.

1.3.5.3 O&M Submittal Data

Provide a copy of all SD-10 Operation and Maintenance Data submittals required in the applicable technical sections.

1.3.5.4 Parts Identification

Provide identification and coverage for all parts of each component, assembly, subassembly, and accessory of the end items subject to replacement. Include special hardware requirements, such as requirement to

use high-strength bolts and nuts. Identify parts by make, model, serial number, and source of supply to allow reordering without further identification. Provide clear and legible illustrations, drawings, and exploded views to enable easy identification of the items. When illustrations omit the part numbers and description, both the illustrations and separate listing shall show the index, reference, or key number that will cross-reference the illustrated part to the listed part. Parts shown in the listings shall be grouped by components, assemblies, and subassemblies in accordance with the manufacturer's standard practice. Parts data may cover more than one model or series of equipment, components, assemblies, subassemblies, attachments, or accessories, such as typically shown in a master parts catalog

1.3.5.5 Warranty Information

List and explain the various warranties and clearly identify the servicing and technical precautions prescribed by the manufacturers or contract documents in order to keep warranties in force. Include warranty information for primary components such as the compressor of air conditioning system.

1.3.5.6 Personnel Training Requirements

Provide information available from the manufacturers that is needed for use in training designated personnel to properly operate and maintain the equipment and systems.

1.3.5.7 Testing Equipment and Special Tool Information

Include information on test equipment required to perform specified tests and on special tools needed for the operation, maintenance, and repair of components.

1.3.5.8 Testing and Performance Data

Include completed prefunctional checklists, functional performance test forms, and monitoring reports. Include recommended schedule for retesting and blank test forms.

1.3.5.9 Contractor Information

Provide a list that includes the name, address, and telephone number of the General Contractor and each Subcontractor who installed the product or equipment, or system. For each item, also provide the name address and telephone number of the manufacturer's representative and service organization that can provide replacements most convenient to the project site. Provide the name, address, and telephone number of the product, equipment, and system manufacturers.

1.4 TYPES OF INFORMATION REQUIRED IN CONTROLS O&M DATA PACKAGES

Include Data Package 5 and the following for control systems:

a. Narrative description on how to perform and apply all functions, features, modes, and other operations, including unoccupied operation, seasonal changeover, manual operation, and alarms. Include detailed technical manual for programming and customizing control loops and algorithms.

b. Full as-built sequence of operations.

c. Copies of all checkout tests and calibrations performed by the Contractor (not Cx tests).

d. Full points list. A listing of rooms shall be provided with the following information for each system:

(1) Location

(2) System name

(3) Pumping equipment ID

(4) Reference drawing number

(5) System valve tag ID

(6) Minimum gpm flow rate and pressure

(7) Maximum gpm flow rate and pressure

e. Full print out of all schedules and set points after testing and acceptance of the system.

f. Full as-built print out of software program.

g. Electronic File:

(1) Assemble each manual into a composite electronically indexed file in PDF format. Provide CDs as appropriate, so that each one contains all maintenance and record files, and also the Project Record Documents, of the entire program for this facility.

(2) Name each indexed document file in composite electronic index with applicable item name. Include a complete electronically linked operation and maintenance directory.

(3) Link the index to separate files within the composite of files. Book mark maintenance and record files, that have a Table of Contents, according to the Table of Contents.

h. Marking of all system instruments and valves on the as-built mechanical drawings with their control system designations.

1.5 SCHEDULE OF OPERATION AND MAINTENANCE DATA PACKAGES

Furnish the O&M data packages specified in individual technical sections. The required information for each O&M data package is as follows:

1.5.1 Data Package 1

a. Safety precautions

b. Cleaning recommendations

c. Maintenance and repair procedures

d. Warranty information

e. Contractor information

f. Spare parts and supply list

1.5.2 Data Package 2

a. Safety precautions

b. Normal operations

c. Environmental conditions

d. Lubrication data

e. Preventive maintenance plan and schedule

f. Cleaning recommendations

g. Maintenance and repair procedures

h. Removal and replacement instructions

i. Spare parts and supply list

j. Parts identification

k. Warranty information

l. Contractor information

1.5.3 Data Package 3

a. Safety precautions

b. Operator prestart

c. Startup, shutdown, and post-shutdown procedures

d. Normal operations

e. Emergency operations

f. Environmental conditions

g. Lubrication data

h. Preventive maintenance plan and schedule

i. Cleaning recommendations

j. Troubleshooting guides and diagnostic techniques

k. Wiring diagrams and control diagrams

l. Maintenance and repair procedures

m. Removal and replacement instructions

n. Spare parts and supply list

o. Product submittal data

p. O&M submittal data

q. Parts identification

r. Warranty information

s. Testing equipment and special tool information

t. Testing and performance data

u. Contractor information

1.5.4 Data Package 4

a. Safety precautions

b. Operator prestart

c. Startup, shutdown, and post-shutdown procedures

d. Normal operations

e. Emergency operations

f. Operator service requirements

g. Environmental conditions

h. Lubrication data

i. Preventive maintenance plan and schedule

j. Cleaning recommendations

k. Troubleshooting guides and diagnostic techniques

l. Wiring diagrams and control diagrams

m. Maintenance and repair procedures

n. Removal and replacement instructions

o. Spare parts and supply list

p. Corrective maintenance man-hours

q. Product submittal data

r. O&M submittal data

s. Parts identification

t. Warranty information

u. Personnel training requirements

v. Testing equipment and special tool information

w. Testing and performance data

x. Contractor information

1.5.5 Data Package 5

a. Safety precautions

b. Operator prestart

c. Start-up, shutdown, and post-shutdown procedures

d. Normal operations

e. Environmental conditions

f. Preventive maintenance plan and schedule

g. Troubleshooting guides and diagnostic techniques

h. Wiring and control diagrams

i. Maintenance and repair procedures

j. Removal and replacement instructions

k. Spare parts and supply list

l. Product submittal data

m. Manufacturer's instructions

n. O&M submittal data

o. Parts identification

p. Testing equipment and special tool information

q. Warranty information

r. Testing and performance data

s. Contractor information

PART 2 PRODUCTS

Not Used

PART 3 EXECUTION

Not Used

-- End of Section --

SECTION 02 41 00

DEMOLITION
05/10

PART 1 GENERAL

1.1 REFERENCES

The publications listed below form a part of this specification to the extent referenced. The publications are referred to within the text by the basic designation only.

AIR-CONDITIONING, HEATING AND REFRIGERATION INSTITUTE (AHRI)

AHRI Guideline K	(2009) Guideline for Containers for Recovered Non-Flammable Fluorocarbon Refrigerants

AMERICAN SOCIETY OF SAFETY ENGINEERS (ASSE/SAFE)

ASSE/SAFE A10.6	(2006) Safety Requirements for Demolition Operations

U.S. ARMY CORPS OF ENGINEERS (USACE)

EM 385-1-1	(2008; Errata 1-2010; Changes 1-3 2010; Changes 4-6 2011; Change 7 2012) Safety and Health Requirements Manual

U.S. DEFENSE LOGISTICS AGENCY (DLA)

DLA 4145.25	(June 2000) Storage and Handling of Liquefied and Gaseous Compressed Gases and Their Full and Empty Cylinders

U.S. DEPARTMENT OF DEFENSE (DOD)

DOD 4000.25-1-M	(2006) MILSTRIP - Military Standard Requisitioning and Issue Procedures
MIL-STD-129	(2014; Rev R) Military Marking for Shipment and Storage

U.S. NATIONAL ARCHIVES AND RECORDS ADMINISTRATION (NARA)

40 CFR 61	National Emission Standards for Hazardous Air Pollutants
40 CFR 82	Protection of Stratospheric Ozone
49 CFR 173.301	Shipment of Compressed Gases in Cylinders and Spherical Pressure Vessels

1.2 PROJECT DESCRIPTION

1.2.1 Demolition Plan

Prepare a Demolition Plan and submit proposed salvage, demolition, and removal procedures for approval before work is started. Include in the plan procedures for careful removal and disposition of materials specified to be salvaged, coordination with other work in progress, a disconnection schedule of utility services, and a detailed description of methods and equipment to be used for each operation and of the sequence of operations. Identify components and materials to be salvaged for reuse or recycling with reference to paragraph Existing Facilities to be Removed. Append tracking forms for all removed materials indicating type, quantities, condition, destination, and end use. Coordinate with Waste Management Plan. Provide procedures for safe conduct of the work in accordance with EM 385-1-1. Plan shall be approved by Contracting Officer prior to work beginning.

1.2.2 General Requirements

Do not begin demolition until authorization is received from the Contracting Officer. The work of this section is to be performed in a manner that maximizes the value derived from the salvage and recycling of materials. Remove rubbish and debris from the project site; do not allow accumulations inside or outside the buildings. The work includes demolition, salvage of identified items and materials, and removal of resulting rubbish and debris. Remove rubbish and debris from Government property daily, unless otherwise directed. Store materials that cannot be removed daily in areas specified by the Contracting Officer. In the interest of occupational safety and health, perform the work in accordance with EM 385-1-1, Section 23, Demolition, and other applicable Sections.

1.3 ITEMS TO REMAIN IN PLACE

Take necessary precautions to avoid damage to existing items to remain in place, to be reused, or to remain the property of the Government. Repair or replace damaged items as approved by the Contracting Officer. Coordinate the work of this section with all other work indicated. Construct and maintain shoring, bracing, and supports as required.

1.3.1 Existing Construction Limits and Protection

Do not disturb existing construction beyond the extent indicated or necessary for installation of new construction. Provide temporary shoring and bracing for support of building components to prevent settlement or other movement. Provide protective measures to control accumulation and migration of dust and dirt in all work areas.

1.3.2 Trees

Trees within demolition area may be removed and disposed of at the cost of the Contractor.

1.3.3 Utility Service

Maintain existing utilities indicated to stay in service and protect against damage during demolition and deconstruction operations. Prior to start of work, the Government will disconnect and seal utilities serving each area of alteration or removal upon written request from the Contractor.

1.3.4 Facilities

Protect electrical and mechanical services and utilities. Where removal of existing utilities and pavement is specified or indicated, provide approved barricades, temporary covering of exposed areas, and temporary services or connections for electrical and mechanical utilities.

1.4 BURNING

The use of burning at the project site for the disposal of refuse and debris will not be permitted.

1.5 SUBMITTALS

Government approval is required for submittals with a "G" designation; submittals not having a "G" designation are for Contractor Quality Control approval. Submit the following in accordance with Section 01 33 00 SUBMITTAL PROCEDURES:

SD-01 Preconstruction Submittals

Existing Conditions; G

SD-07 Certificates

Demolition Plan; G
Notification; G

SD-11 Closeout Submittals

Receipts

1.6 QUALITY ASSURANCE

Submit timely notification of demolition, deconstruction, and renovation projects to Federal, State, regional, and local authorities in accordance with 40 CFR 61, Subpart M. In addition to the requirements of the "Contract Clauses," conform to the safety requirements contained in ASSE/SAFE A10.6. Comply with the Environmental Protection Agency requirements specified. Use of explosives will not be permitted.

1.6.1 Dust Control

Prevent the spread of dust and avoid the creation of a nuisance in the surrounding area. Do not use water if it results in hazardous or objectionable conditions such as, but not limited to, ice, flooding, or pollution.

1.7 PROTECTION

1.7.1 Traffic Control Signs

Where pedestrian and driver safety is endangered in the area of removal work, use traffic barricades with flashing lights. Anchor barricades in a manner to prevent displacement by wind. Notify the Contracting Officer prior to beginning such work.

1.7.2 Protection of Personnel

Before, during and after the demolition and deconstruction work continuously evaluate the condition of the structure being demolished and deconstructed and take immediate action to protect all personnel working in and around the project site. No area, section, or component of floors, roofs, walls, columns, pilasters, or other structural element will be allowed to be left standing without sufficient bracing, shoring, or lateral support to prevent collapse or failure while workmen remove debris or perform other work in the immediate area.

1.8 RELOCATIONS

Perform the removal and reinstallation of relocated items as indicated with workmen skilled in the trades involved. Repair or replace items to be relocated which are damaged by the Contractor with new undamaged items as approved by the Contracting Officer.

1.9 EXISTING CONDITIONS

Before beginning any demolition or deconstruction work, survey the site and examine the drawings and specifications to determine the extent of the work. Record existing conditions in the presence of the Contracting Officer showing the condition of structures and other facilities adjacent to areas of alteration or removal. Photographs sized 4 inch will be acceptable as a record of existing conditions. Include in the record the elevation of the top of foundation walls, finish floor elevations, possible conflicting electrical conduits, plumbing lines, alarms systems, the location and extent of existing cracks and other damage and description of surface conditions that exist prior to before starting work. It is the Contractor's responsibility to verify and document all required outages which will be required during the course of work, and to note these outages on the record document. Submit survey results.

PART 2 PRODUCTS

2.1 FILL MATERIAL

a. Comply with excavating, backfilling, and compacting procedures for soils used as backfill material to fill basements, voids, depressions or excavations resulting from demolition or deconstruction of structures.

b. Fill material shall conform to the requirements for satisfactory materials in Section 31 23 00.00 20 EXCAVATION AND FILL.

PART 3 EXECUTION

3.1 EXISTING FACILITIES TO BE REMOVED

Inspect and evaluate existing structures onsite for reuse. Existing construction scheduled to be removed for reuse shall be disassembled. Dismantled and removed materials are to be separated, set aside, and prepared as specified, and stored or delivered to a collection point for reuse, remanufacture, recycling, or other disposal, as specified. Materials shall be designated for reuse onsite whenever possible.

3.1.1 Structures

Remove existing structures indicated to be removed to 2 feet below grade. Break up below-grade slabs to permit drainage. Remove sidewalks, curbs, gutters and street light bases as indicated.

3.1.2 Utilities and Related Equipment

3.1.2.1 General Requirements

Do not interrupt existing utilities serving occupied or used facilities, except when authorized in writing by the Contracting Officer. Do not interrupt existing utilities serving facilities occupied and used by the Government except when approved in writing and then only after temporary utility services have been approved and provided. Do not begin demolition or deconstruction work until all utility disconnections have been made. Shut off and cap utilities for future use, as indicated.

3.1.2.2 Disconnecting Existing Utilities

Remove existing utilities as indicated and terminate in a manner conforming to the nationally recognized code covering the specific utility and approved by the Contracting Officer. When utility lines are encountered but are not indicated on the drawings, notify the Contracting Officer prior to further work in that area. Remove meters and related equipment and deliver to a location on the Base in accordance with instructions of the Contracting Officer.

3.1.3 Paving and Slabs

Remove concrete and asphaltic concrete paving and slabs as indicated. Provide neat sawcuts at limits of pavement removal as indicated. Pavement and slabs designated to be recycled and utilized in this project shall be moved, ground and stored as directed by the Contracting Officer. Pavement and slabs not to be used in this project shall be removed from the Installation at Contractor's expense.

3.1.4 Concrete

Saw concrete along straight lines to a depth of a minimum 2 inch. Make each cut in walls perpendicular to the face and in alignment with the cut in the opposite face. Break out the remainder of the concrete provided that the broken area is concealed in the finished work, and the remaining concrete is sound. At locations where the broken face cannot be concealed, grind smooth or saw cut entirely through the concrete.

3.1.5 Structural Steel

Salvage for recycle structural steel, steel joists, girders, angles, plates, columns and shapes. Flame-cutting torches are permitted when other methods of dismantling are not practical.

3.1.6 Air Conditioning Equipment

Remove air conditioning, refrigeration, and other equipment containing refrigerants without releasing chlorofluorocarbon refrigerants to the atmosphere in accordance with the Clean Air Act Amendment of 1990. Recover all refrigerants prior to removing air conditioning, refrigeration, and other equipment containing refrigerants and dispose of

in accordance with the paragraph entitled "Disposal of Ozone Depleting Substance (ODS)." Turn in salvaged Class I ODS refrigerants as specified in paragraph, "Salvaged Materials and Equipment."

3.1.7 Mechanical Equipment and Fixtures

Disconnect mechanical hardware at the nearest connection to existing services to remain, unless otherwise noted. Disconnect mechanical equipment and fixtures at fittings. Remove service valves attached to the unit. Salvage each item of equipment and fixtures as a whole unit; listed, indexed, tagged, and stored. Salvage each unit with its normal operating auxiliary equipment. Transport salvaged equipment and fixtures, including motors and machines, to a designated storage area on Base as directed by the Contracting Officer. Do not remove equipment until approved. Do not offer low-efficiency equipment for reuse; provide to recycling service for disassembly and recycling of parts.

3.1.7.1 Preparation for Storage

Remove water, dirt, dust, and foreign matter from units; tanks, piping and fixtures shall be drained; interiors, if previously used to store flammable, explosive, or other dangerous liquids, shall be steam cleaned. Seal openings with caps, plates, or plugs. Secure motors attached by flexible connections to the unit. Change lubricating systems with the proper oil or grease.

3.1.7.2 Piping

Disconnect piping at unions, flanges and valves, and fittings as required to reduce the pipe into straight lengths for practical storage. Store salvaged piping according to size and type. If the piping that remains can become pressurized due to upstream valve failure, end caps, blind flanges, or other types of plugs or fittings with a pressure gage and bleed valve shall be attached to the open end of the pipe to ensure positive leak control. Carefully dismantle piping that previously contained gas, gasoline, oil, or other dangerous fluids, with precautions taken to prevent injury to persons and property. Store piping outdoors until all fumes and residues are removed. Box prefabricated supports, hangers, plates, valves, and specialty items according to size and type. Wrap sprinkler heads individually in plastic bags before boxing. Classify piping not designated for salvage, or not reusable, as scrap metal.

3.1.7.3 Fixtures, Motors and Machines

Remove and salvage fixtures, motors and machines associated with plumbing, heating, air conditioning, refrigeration, and other mechanical system installations. Salvage, box and store auxiliary units and accessories with the main motor and machines. Tag salvaged items for identification, storage, and protection from damage. Classify non-porcelain broken, damaged, or otherwise unserviceable units and not caused to be broken, damaged, or otherwise unserviceable as debris to be disposed of by the Contractor.

3.1.8 Electrical Equipment and Fixtures

Salvage motors, motor controllers, and operating and control equipment that are attached to the driven equipment. Salvage wiring systems and components. Box loose items and tag for identification. Disconnect primary, secondary, control, communication, and signal circuits at the

point of attachment to their distribution system.

3.1.8.1 Fixtures

Remove and salvage electrical fixtures. Salvage unprotected glassware from the fixture and salvage separately. Salvage incandescent, mercury-vapor, and fluorescent lamps and fluorescent ballasts manufactured prior to 1978, boxed and tagged for identification, and protected from breakage.

3.1.8.2 Electrical Devices

Remove and salvage switches, switchgear, transformers, conductors including wire and nonmetallic sheathed and flexible armored cable, regulators, meters, instruments, plates, circuit breakers, panelboards, outlet boxes, and similar items. Box and tag these items for identification according to type and size.

3.1.8.3 Wiring Ducts or Troughs

Remove and salvage wiring ducts or troughs. Dismantle plug-in ducts and wiring troughs into unit lengths. Remove plug-in or disconnecting devices from the busway and store separately.

3.1.8.4 Conduit and Miscellaneous Items

Salvage conduit except where embedded in concrete or masonry. Consider corroded, bent, or damaged conduit as scrap metal. Sort straight and undamaged lengths of conduit according to size and type. Classify supports, knobs, tubes, cleats, and straps as debris to be removed and disposed.

3.1.9 Items With Unique/Regulated Disposal Requirements

Remove and dispose of items with unique or regulated disposal requirements in the manner dictated by law or in the most environmentally responsible manner.

3.2 CONCURRENT EARTH-MOVING OPERATIONS

Do not begin excavation, filling, and other earth-moving operations that are sequential to demolition or deconstruction work in areas occupied by structures to be demolished or deconstructed until all demolition and deconstruction in the area has been completed and debris removed. Fill holes, open basements and other hazardous openings.

3.3 DISPOSITION OF MATERIAL

3.3.1 Title to Materials

Except for salvaged items specified in related Sections, and for materials or equipment scheduled for salvage, all materials and equipment removed and not reused or salvaged, shall become the property of the Contractor and shall be removed from Government property. Title to materials resulting from demolition and deconstruction, and materials and equipment to be removed, is vested in the Contractor upon approval by the Contracting Officer of the Contractor's demolition, deconstruction, and removal procedures, and authorization by the Contracting Officer to begin demolition and deconstruction. The Government will not be responsible for

the condition or loss of, or damage to, such property after contract award. Showing for sale or selling materials and equipment on site is prohibited.

3.3.2 Reuse of Materials and Equipment

Remove and store materials and equipment indicated on the drawings to be reused or relocated to prevent damage, and reinstall as the work progresses.

3.3.3 Salvaged Materials and Equipment

Remove materials and equipment that are indicated and specified to be removed by the Contractor and that are to remain the property of the Government, and deliver to a storage site on Base.

a. Salvage items and material to the maximum extent possible.

b. Store all materials salvaged for the Contractor as approved by the Contracting Officer and remove from Government property before completion of the contract. On site sales of salvaged material is prohibited.

c. Remove salvaged items to remain the property of the Government in a manner to prevent damage, and packed or crated to protect the items from damage while in storage or during shipment. Items damaged during removal or storage must be repaired or replaced to match existing items. Properly identify the contents of containers.

d. Remove historical items in a manner to prevent damage. Deliver the following historical items to the Government for disposition: Corner stones, contents of corner stones, and document boxes wherever located on the site.

e. Remove and capture all Class I ODS refrigerants in accordance with the Clean Air Act Amendment of 1990, and turn in to the Navy as directed by the Commanding Officer.

3.3.4 Disposal of Ozone Depleting Substance (ODS)

Class I and Class II ODS are defined in Section, 602(a) and (b), of The Clean Air Act. Prevent discharge of Class I and Class II ODS to the atmosphere. Place recovered ODS in cylinders meeting AHRI Guideline K suitable for the type ODS (filled to no more than 80 percent capacity) and provide appropriate labeling. Recovered ODS shall be removed from Government property and disposed of in accordance with 40 CFR 82. Products, equipment and appliances containing ODS in a sealed, self-contained system (e.g. residential refrigerators and window air conditioners) shall be disposed of in accordance with 40 CFR 82. Submit Receipts or bills of lading, as specified. Submit a shipping receipt or bill of lading for all containers of ozone depleting substance (ODS) shipped to the Defense Depot, Richmond, Virginia.

3.3.4.1 Special Instructions

No more than one type of ODS is permitted in each container. A warning/hazardous label shall be applied to the containers in accordance with Department of Transportation regulations. All cylinders including but not limited to fire extinguishers, spheres, or canisters containing an

ODS shall have a tag with the following information:

a. Activity name and unit identification code

b. Activity point of contact and phone number

c. Type of ODS and pounds of ODS contained

d. Date of shipment

e. National stock number (for information, call (804) 279-4525).

3.3.4.2 Fire Suppression Containers

Deactivate fire suppression system cylinders and canisters with electrical charges or initiators prior to shipment. Also, safety caps must be used to cover exposed actuation mechanisms and discharge ports on these special cylinders.

3.3.5 Transportation Guidance

Ship all ODS containers in accordance with MIL-STD-129, DLA 4145.25 (also referenced one of the following: Army Regulation 700-68, Naval Supply Instruction 4440.128C, Marine Corps Order 10330.2C, and Air Force Regulation 67-12), 49 CFR 173.301, and DOD 4000.25-1-M.

3.4 CLEANUP

Remove debris and rubbish from basement and similar excavations. Remove and transport the debris in a manner that prevents spillage on streets or adjacent areas. Apply local regulations regarding hauling and disposal.

3.5 DISPOSAL OF REMOVED MATERIALS

3.5.1 Regulation of Removed Materials

Dispose of debris, rubbish, scrap, and other nonsalvageable materials resulting from removal operations with all applicable federal, state and local regulations as contractually specified in the Waste Management Plan.

3.5.2 Burning on Government Property

Burning of materials removed from demolished and deconstructed structures will not be permitted on Government property.

3.5.3 Removal from Government Property

Transport waste materials removed from demolished and deconstructed structures, except waste soil, from Government property for legal disposal. Dispose of waste soil as directed.

3.6 REUSE OF SALVAGED ITEMS

Recondition salvaged materials and equipment designated for reuse before installation. Replace items damaged during removal and salvage operations or restore them as necessary to usable condition.

-- End of Section --

SECTION 02 61 13

EXCAVATION AND HANDLING OF CONTAMINATED MATERIAL
02/10

PART 1 GENERAL

1.1 MEASUREMENT AND PAYMENT

1.1.1 Measurement

Measurement for excavation and onsite transportation shall be based on the actual number of cubic yards of contaminated material stockpiled in-place. Determination of the volume of contaminated material excavated shall be based on cross-sectional volume determination reflecting the differential between the original elevations of the top of the contaminated material and the final elevations after removal of the contaminated material. Measurement for backfill placement in previously excavated areas shall be based on in-place cubic yards of compacted fill. Measurement for construction of stockpile areas shall be based on the number of cubic yards of stockpiled material.

1.1.2 Payment

1.1.2.1 Removal and Disposal

Compensation for removal offsite and disposal of contaminated material will be paid as a unit cost. This unit cost shall include any other items incidental to handling and transportation not defined as having a specific unit cost.

1.1.2.2 Backfill Placement

Compensation for backfill soil placement provisions including transportation of backfill from offsite sources, backfilling, compaction, and geotechnical testing will be paid as a specific unit cost.

1.1.2.3 Stockpiling

Compensation for construction of stockpile areas will not be paid for as a unit cost. This Base Bid cost shall include all aspects of preparation, handling, placement, maintenance, removal, treatment, and disposal of stockpile cover materials and liner materials and all other items incidental to construction of stockpiles.

1.2 REFERENCES

The publications listed below form a part of this specification to the extent referenced. The publications are referred to within the text by the basic designation only.

ASTM INTERNATIONAL (ASTM)

ASTM D1557	(2012) Standard Test Methods for Laboratory Compaction Characteristics of Soil Using Modified Effort (56,000 ft-lbf/ft3) (2700 kN-m/m3)

ASTM D5434	(2012) Field Logging of Subsurface Explorations of Soil and Rock

U.S. ARMY CORPS OF ENGINEERS (USACE)

EM 385-1-1	(2008; Errata 1-2010; Changes 1-3 2010; Changes 4-6 2011; Change 7 2012) Safety and Health Requirements Manual

U.S. NATIONAL ARCHIVES AND RECORDS ADMINISTRATION (NARA)

29 CFR 1926	Safety and Health Regulations for Construction
40 CFR 302	Designation, Reportable Quantities, and Notification

1.3 DESCRIPTION OF WORK

Soil excavated during construction is not expected to be contaminated with petroleum hydrocarbons. If hydrocarbon impacted soil is discovered during construction, the soil will be field screened by the Contractor. The soil will be segregated as clean or potentially contaminated based upon visual identification and PID field instrument screening. The Contractor will be directed to stockpile potentially contaminated soils in a designated area. Testing of the stockpiles will determine which soils are impacted by contamination and require offsite disposal and which are non-contaminated or below the clean fill limit. The clean fill limit for Total Petroleum Hydrocarbons has been designated at 500 ppm.

Following excavation activities, undisturbed soils left in place will be field screened. If field screening detects the potential for petroleum hydrocarbons to be present, samples will be collected to document any contamination left in place.

1.3.1 Scheduling

Notify the Contracting Officer 14 calendar days prior to the start of excavation of contaminated material. The Contracting Officer will be responsible for contacting regulatory agencies in accordance with the applicable reporting requirements.

1.3.2 Work Plan

Submit a Work Plan within 30 calendar days after notice to proceed. No work at the site, with the exception of site inspections and surveys, shall be performed until the Work Plan is approved. Allow 30 calendar days in the schedule for the Government's review. No adjustment for time or money will be made if resubmittals of the Work Plan are required due to deficiencies in the plan. At a minimum, the Work Plan shall include:

a. Schedule of activities.

b. Method of excavation and equipment to be used.

c. Shoring or side-wall slopes proposed.

d. Dewatering plan.

e. Storage methods and locations for liquid and solid contaminated material.

f. Borrow sources and haul routes.

g. Decontamination procedures.

h. Spill contingency plan.

1.3.3 Other Submittal Requirements

Submit separate cross-sections of each area before and after excavation and after backfilling, test results, and 2 copies of the Closure Report within 14 calendar days of work completion at the site.

1.4 SUBMITTALS

Government approval is required for submittals with a "G" designation; submittals not having a "G" designation are for Contractor Quality Control approval. When used, a designation following the "G" designation identifies the office that will review the submittal for the Government. Submit the following in accordance with Section 01 33 00 SUBMITTAL PROCEDURES:

SD-06 Test Reports

Surveys; G
Confirmation Sampling and Analysis; G
Sampling of Stored Material; G
Sampling Liquid; G
Compaction; G

1.5 REGULATORY REQUIREMENTS

1.5.1 Permits and Licenses

Obtain required federal, state, and local permits for excavation and storage of contaminated material. Permits shall be obtained at no additional cost to the Government.

1.5.2 Air Emissions

Air emissions shall be monitored and controlled in accordance with Section 01 57 20.00 10 ENVIRONMENTAL PROTECTION.

PART 2 PRODUCTS

2.1 SPILL RESPONSE MATERIALS

Provide appropriate spill response materials including, but not limited to the following: containers, adsorbents, shovels, and personal protective equipment. Spill response materials shall be available at all times when contaminated materials/wastes are being handled or transported. Spill response materials shall be compatible with the type of materials and contaminants being handled.

2.2 BACKFILL

If needed, backfill soil material shall be obtained from clean onsite or offsite soil sources.

PART 3 EXECUTION

3.1 SURVEYS

Surveys shall be performed immediately prior to and after excavation of contaminated material to determine the volume of contaminated material removed. Surveys shall also be performed immediately after backfill of each excavation. Provide cross-sections on 25 foot intervals and at break points for all excavated areas. Locations of confirmation samples shall also be surveyed and shown on the drawings.

3.2 EXISTING STRUCTURES AND UTILITIES

No excavation shall be performed until site utilities have been field located. Take the necessary precautions to ensure no damage occurs to existing structures and utilities. Damage to existing structures and utilities resulting from the Contractor's operations shall be repaired at no additional cost to the Government. Utilities encountered that were not previously shown or otherwise located shall not be disturbed without approval from the Contracting Officer.

3.3 CLEARING

Clearing shall be performed to the limits shown on the drawings in accordance with Section 31 23 00.00 20 EXCAVATION AND FILL.

3.4 CONTAMINATED MATERIAL REMOVAL

3.4.1 Excavation

Areas of contamination shall be excavated to the depth and extent based on visual observation and field screening results. Excavation shall be performed in a manner that will limit spills and the potential for contaminated material to be mixed with uncontaminated material. An excavation log describing visible signs of contamination encountered shall be maintained for each area of excavation. Excavation logs shall be prepared in accordance with ASTM D5434.

3.4.2 Shoring

If workers must enter the excavation, it shall be evaluated, shored, sloped or braced as required by EM 385-1-1 and 29 CFR 1926 section 650.

3.4.3 Dewatering

Surface water shall be diverted to prevent entry into the excavation. Dewatering shall be limited to that necessary to assure adequate access, a safe excavation, prevent the spread of contamination, and to ensure that compaction requirements can be met. No dewatering shall be performed without prior approval of the Contracting Officer.

3.5 CONFIRMATION SAMPLING AND ANALYSIS

The Contracting Officer shall be present to inspect the removal of

contaminated material from each site. After all material suspected of being contaminated has been removed, the excavation shall be examined for evidence of contamination. If the excavation appears to be free of contamination, field analysis shall be used to determine the presence of TBH-DRO contamination using a real time vapor monitoring instrument. Excavation of additional material shall be as directed by the Contracting Officer. The Contractor will be directed to stockpile any potential contaminated soils in a designated area. Testing of stockpile will determine which soils are impacted and require offsite disposal. The clean fill limit for TPH-DRO is designated at 500 ppm.

3.6 CONTAMINATED MATERIAL STORAGE

Material shall be placed in temporary storage immediately after excavation. The following paragraphs describe acceptable methods of material storage. Storage units shall be in good condition and constructed of materials that are compatible with the material or liquid to be stored. If multiple storage units are required, each unit shall be clearly labeled with an identification number and a written log shall be kept to track the source of contaminated material in each temporary storage unit.

3.6.1 Stockpiles

Stockpiles shall be constructed to isolate stored contaminated material from the environment. The maximum stockpile size shall be 500 cubic yards. Stockpiles shall be constructed to include:

a. Geomembrane cover free of holes or other damage to prevent precipitation from entering the stockpile. Non-reinforced geomembrane covers shall have a minimum thickness of 10 mils. Scrim reinforced geomembrane covers shall have a minimum weight of 26 lbs/1000 square feet. The cover material shall be extended over the berms and anchored or ballasted to prevent it from being removed or damaged by wind.

b. Berms surrounding the stockpile, a minimum of 12 inches in height. Vehicle access points shall also be bermed.

c. The liner system shall be sloped to allow collection of leachate. Storage and removal of liquid which collects in the stockpile, in accordance with paragraph Liquid Storage.

3.6.2 Roll-Off Units

Roll-off units used to temporarily store contaminated material shall be water tight. A cover shall be placed over the units to prevent precipitation from contacting the stored material. Liquid which collects inside the units shall be removed and stored in accordance with paragraph Liquid Storage.

3.6.3 Liquid Storage

Liquid collected from excavations and stockpiles shall be temporarily stored in 55 gallon barrels. Liquid storage containers shall be water-tight and shall be located at a location designated by the Contracting Officer.

3.7 SAMPLING

3.7.1 Sampling of Stored Material

Samples of stored material shall be collected at a frequency of once per 50 cubic yards. Samples shall be tested for the following:

Chemical Parameter	Action Level
TPH-DRO, BTEX, TOX, TCLP (RCRA - Metals, VOCs, SVOCs)	TPH-DRO - 500 ppm/other parameters - VADEQ or TSD approved limits

Stored material with contaminant levels that exceed the action levels shall be treated offsite. Analyses for contaminated material to be taken to an offsite treatment facility shall conform to local, state, and federal criteria as well as to the requirements of the treatment facility. Documentation of all analyses performed shall be furnished to the Contracting Officer. Additional sampling and analyses to the extent required by the approved offsite treatment, storage or disposal (TSD) facility shall be the responsibility of the Contractor and shall be subject to approval by the Contracting Officer.

3.7.2 Sampling Liquid

Liquid collected from excavations shall be sampled at a frequency of once for every 500 gal of liquid collected. Samples shall be tested for the following:

Chemical Parameter	Action Level
TPH-DRO, BTEX, RCRA TCLP - Metals, VOCs, SVOCs	VADEQ or TSD approved limits

Liquid with contaminant levels that exceed action levels shall be treated offsite. Analyses for contaminated liquid to be taken to an offsite treatment facility shall conform to local, state, and federal criteria as well as to the requirements of the treatment facility. Documentation of all analyses performed shall be furnished to the Contracting Officer. Additional sampling and analysis to the extent required by the approved offsite treatment, storage or disposal (TSD) facility receiving the material shall be the responsibility of the Contractor and shall be subject to approval by the Contracting Officer.

3.8 SPILLS

In the event of a spill or release of a hazardous substance (as designated in 40 CFR 302), pollutant, contaminant, or oil (as governed by the Oil Pollution Act (OPA), 33 U.S.C. 2701 et seq.), notify the Contracting Officer immediately. If the spill exceeds the reporting threshold, follow the pre-established procedures as described in the Base Wide Contingency Plan for immediate reporting and containment. Immediate containment actions shall be taken to minimize the effect of any spill or leak. Cleanup shall be in accordance with applicable federal, state, and local regulations. As directed by the Contracting Officer, additional sampling and testing shall be performed to verify spills have been cleaned up. Spill cleanup and testing shall be done at no additional cost to the Government.

3.9 BACKFILLING

3.9.1 Confirmation Test Results

Excavations shall be backfilled immediately after all contaminated materials have been removed and confirmation test results have been approved. Backfill shall be placed and compacted to the lines and grades shown on the drawings.

3.9.2 Compaction

Approved backfill shall be placed in lifts with a maximum loose thickness of 8 inches. Soil shall be compacted to 90 percent of ASTM D1557 maximum dry density.

3.10 DISPOSAL REQUIREMENTS

Offsite disposal of contaminated material shall be in accordance with State and Federal rules.

3.11 CLOSURE REPORT

Two copies of a Closure Report shall be prepared and submitted within 14 calendar days of completing work at the site. The report shall be labeled with the contract number, project name, location, date, name of general Contractor, and the Corps of Engineers District contracting for the work. The Closure Report shall include the following information as a minimum:

a. A cover letter signed by a responsible company official certifying that all services involved have been performed in accordance with the terms and conditions of the contract documents and regulatory requirements.

b. A narrative report including, but not limited to, the following:

(1) site conditions, ground water elevation, and cleanup criteria;

(2) excavation logs;

(3) field screening readings;

(4) quantity of materials removed from each area of contamination;

(5) quantity of water/product removed during dewatering;

(6) sampling locations and sampling methods;

(7) sample collection data such as time of collection and method of preservation;

(8) sample chain-of-custody forms; and

(9) source of backfill.

c. Copies of all chemical and physical test results.

d. Copies of all manifests and land disposal restriction notifications.

e. Copies of all certifications of final disposal signed by the

responsible disposal facility official.

f. Waste profile sheets.

g. Scale drawings showing limits of each excavation, limits of contamination, known underground utilities within 50 feet of excavation, sample locations, and sample identification numbers. On-site stockpile, storage, treatment, loading, and disposal areas shall also be shown on the drawings.

h. Progress Photographs. Color photographs shall be used to document progress of the work. A minimum of four views of the site showing the location of the area of contamination, entrance/exit road, and any other notable site conditions shall be taken before work begins. After work has been started, activities at each work location shall be photographically recorded weekly. Photographs shall be a minimum of 3 by 5 inches and shall include:

(1) Soil removal and sampling.

(2) Dewatering operations.

(3) Unanticipated events such as spills and the discovery of additional contaminated material.

(4) Contaminated material/water storage, handling, treatment, and transport.

(5) Site or task-specific employee respiratory and personal protection.

(6) Fill placement and grading.

(7) Post-construction photographs. After completion of work at each site, take a minimum of four views of each excavation site.

A digital version of all photos shown in the report shall be included with the Closure Report. Photographs shall be a minimum of 3 inches by 5 inches and shall be mounted back-to-back in double face plastic sleeves punched to fit standard three ring binders. Each print shall have an information box attached. The box shall be typewritten and arranged as follows:

Project Name:	Direction of View:
Location:	Date/Time:
Photograph No.:	Description of View:

-- End of Section --

SECTION 02 82 33.13 20

REMOVAL/CONTROL AND DISPOSAL OF PAINT WITH LEAD
08/11

PART 1 GENERAL

1.1 REFERENCES

The publications listed below form a part of this specification to the extent referenced. The publications are referred to within the text by the basic designation only.

AMERICAN INDUSTRIAL HYGIENE ASSOCIATION (AIHA)

AIHA Z88.6	(2006) Respiratory Protection - Respirator Use-Physical Qualifications for Personnel

U.S. DEPARTMENT OF HOUSING AND URBAN DEVELOPMENT (HUD)

HUD 6780	(1995; Errata Aug 1996;Rev Ch. 7 - 1997) Guidelines for the Evaluation and Control of Lead-Based Paint Hazards in Housing

U.S. NATIONAL ARCHIVES AND RECORDS ADMINISTRATION (NARA)

29 CFR 1926.103	Respiratory Protection
29 CFR 1926.21	Safety Training and Education
29 CFR 1926.33	Access to Employee Exposure and Medical Records
29 CFR 1926.55	Gases, Vapors, Fumes, Dusts, and Mists
29 CFR 1926.59	Hazard Communication
29 CFR 1926.62	Lead
29 CFR 1926.65	Hazardous Waste Operations and Emergency Response
40 CFR 260	Hazardous Waste Management System: General
40 CFR 261	Identification and Listing of Hazardous Waste
40 CFR 262	Standards Applicable to Generators of Hazardous Waste
40 CFR 263	Standards Applicable to Transporters of Hazardous Waste
40 CFR 264	Standards for Owners and Operators of Hazardous Waste Treatment, Storage, and Disposal Facilities
40 CFR 265	Interim Status Standards for Owners and

	Operators of Hazardous Waste Treatment, Storage, and Disposal Facilities
40 CFR 268	Land Disposal Restrictions
40 CFR 745	Lead-Based Paint Poisoning Prevention in Certain Residential Structures
49 CFR 172	Hazardous Materials Table, Special Provisions, Hazardous Materials Communications, Emergency Response Information, and Training Requirements
49 CFR 178	Specifications for Packagings

UNDERWRITERS LABORATORIES (UL)

UL 586	(2009) Standard for High-Efficiency Particulate, Air Filter Units

1.2 DEFINITIONS

1.2.1 Abatement

As applied to target housing and child occupied facilities, "abatement" means any set of measures designed to permanently eliminate lead-based paint hazards in accordance with standards established by appropriate Federal agencies. Such term includes:

a. The removal of lead-based paint and lead-contaminated dust, the permanent containment or encapsulation of lead-based paint, the replacement of lead-painted surfaces or fixtures, and the removal or covering of lead contaminated soil; and

b. All preparation, cleanup, disposal, and post-abatement clearance testing activities associated with such measures.

1.2.2 Action Level

Employee exposure, without regard to use of respirators, to an airborne concentration of lead of 30 micrograms per cubic meter of air averaged over an 8 hour period in a work environment.

1.2.3 Area Sampling

Sampling of lead concentrations within the lead control area and inside the physical boundaries, which is representative of the airborne lead concentrations but is not collected in the breathing zone of personnel.

1.2.4 Child Occupied Facility

A building or portion of a building constructed prior to 1978 visited regularly by the same child, 6 years of age or under, on a least two different days within any week, provided each days visit last at least 3 hours and the combined weekly visit last at least 6 hours and the combined annual visit last at least 60 hours. Child occupied facilities may include, but are not limited to day-care centers, preschools and kindergarten classrooms.

1.2.5 Competent Person (CP)

As used in this section, refers to a person employed by the Contractor who is trained in the recognition and control of lead hazards in accordance with current federal, State, and local regulations. A Certified Industrial Hygienist (CIH) certified for comprehensive practice by the American Board of Industrial Hygiene or a Certified Safety Professional (CSP) certified by the Board of Certified Safety Professionals is the best choice.

1.2.6 Contaminated Room

Refers to a room for removal of contaminated personal protective equipment (PPE).

1.2.7 Decontamination Shower Facility

That facility that encompasses a clean clothing storage room, and a contaminated clothing storage and disposal rooms, with a shower facility in between.

1.2.8 Deleading

Activities conducted by a person who offers to eliminate lead-based paint or lead-based paint hazards or to plan such activities in commercial buildings, bridges or other structures.

1.2.9 Eight-Hour Time Weighted Average (TWA)

Airborne concentration of lead to which an employee is exposed, averaged over an 8 hour workday as indicated in 29 CFR 1926.62.

1.2.10 High Efficiency Particulate Air (HEPA) Filter Equipment

HEPA filtered vacuuming equipment with a UL 586 filter system capable of collecting and retaining lead-contaminated paint dust. A high efficiency particulate filter means 99.97 percent efficient against 0.3 micron or larger size particles.

1.2.11 Lead

Metallic lead, inorganic lead compounds, and organic lead soaps.

1.2.12 Lead-Based Paint (LBP)

Paint or other surface coating that contains lead in excess of 1.0 milligrams per centimeter squared or 0.5 percent by weight.

1.2.13 Lead-Based Paint Activities

In the case of target housing or child occupied facilities, lead-based paint activities include; a lead-based paint inspection, a risk assessment, or abatement of lead-based paint hazards.

1.2.14 Lead-Based Paint Hazard (LBP Hazard)

Any condition that causes exposure to lead from lead-contaminated dust, lead-contaminated soil, lead-based paint that is deteriorated or present in accessible surfaces, friction surfaces, or impact surfaces that would result in adverse human health effects.

1.2.15 Paint with Lead (PWL)

Any paint that contains lead as determined by the testing laboratory using a valid test method. The requirements of this section does not apply if no detectable levels of lead are found using a quantitative method for analyzing paint using laboratory instruments with specified limits of detection (usually 0.01 percent). An X-Ray Fluorescence (XRF) instrument is not considered a valid test method.

1.2.16 Lead Control Area

A system of control methods to prevent the spread of lead dust, paint chips or debris to adjacent areas that may include temporary containment, floor or ground cover protection, physical boundaries, and warning signs to prevent unauthorized entry of personnel. HEPA filtered local exhaust equipment may be used as engineering controls to further reduce personnel exposures or building/outdoor environmental contamination.

1.2.17 Lead Permissible Exposure Limit (PEL)

Fifty micrograms per cubic meter of air as an 8 hour time weighted average as determined by 29 CFR 1926.62. If an employee is exposed for more than eight hours in a workday, the PEL shall be determined by the following formula:

PEL (micrograms/cubic meter of air) = 400/No. hrs worked per day

1.2.18 Personal Sampling

Sampling of airborne lead concentrations within the breathing zone of an employee to determine the 8 hour time weighted average concentration in accordance with 29 CFR 1926.62. Samples shall be representative of the employees' work tasks. Breathing zone shall be considered an area within a hemisphere, forward of the shoulders, with a radius of 6 to 9 inches and centered at the nose or mouth of an employee.

1.2.19 Physical Boundary

Area physically roped or partitioned off around an enclosed lead control area to limit unauthorized entry of personnel. As used in this section, "inside boundary" shall mean the same as "outside lead control area but inside the physical boundary."

1.2.20 Target Housing

Housing constructed prior to 1978. It does not include housing for the elderly, or persons with disabilities unless any one or more children age 6 years and younger resides or is expected to reside in such housing.

1.3 DESCRIPTION

1.3.1 Description of Work

Remove/control lead-based / paint with lead in peeling or flaking condition, located on the truck fillstand and associated equipment and as indicated on the drawings.

1.3.2 Coordination with Other Work

The contractor shall coordinate with work being performed in adjacent areas. Coordination procedures shall be explained in the Removal/Control Plan and shall describe how the Contractor will prevent lead exposure to other contractors and/or Government personnel performing work unrelated to lead activities.

1.4 SUBMITTALS

Government approval is required for submittals with a "G" designation; submittals not having a "G" designation are for Contractor Quality Control approval. When used, a designation following the "G" designation identifies the office that will review the submittal for the Government. The following shall be submitted in accordance with Section 01 33 00 SUBMITTAL PROCEDURES:

SD-03 Product Data

Vacuum Filters; G

Respirators; G

SD-06 Test Reports

sampling results; G

Occupational and Environmental Assessment Data Report; G

SD-07 Certificates

Qualifications of CP; G

Testing Laboratory qualifications; G

Occupant Notification; G

Training Certification of workers and supervisors; G

Notification of the Commencement of LBP Hazard Abatement; G

Third Party Consultant Qualifications; G

lead-based paint/paint with lead removal/control plan including CP approval (signature, date, and certification number); G

Rental equipment notification; G

Respiratory Protection Program; G

Hazard Communication Program; G

EPA or State approved hazardous waste treatment, storage, or disposal facility for lead disposal; G

Lead Waste Management Plan; G

Vacuum filters; G

Clearance Certification; G

SD-11 Closeout Submittals

Completed and signed hazardous waste manifest from treatment or disposal facility; G

Certification of Medical Examinations; G

Employee Training Certification; G

Waste turn-in documents or weight tickets for non-hazardous wastes that are disposed of at sanitary or construction and demolition landfills; G

1.5 QUALITY ASSURANCE

1.5.1 Qualifications

1.5.1.1 Qualifications of CP

Submit name, address, and telephone number of the CP selected to perform responsibilities specified in paragraph entitled "Competent Person (CP) Responsibilities." Provide previous experience of the CP. Submit proper documentation that the CP is trained and certified in accordance with Federal, State, and local laws.

1.5.1.2 Training Certification

Submit a certificate for each employee and supervisor, signed and dated by the authorized training provider meeting 40 CFR 745 (Subpart L) requirements, stating that the employee or supervisor has received the required lead training and is certified to perform or supervise deleading or lead removal. Submit proof the work will be performed by a certified firm.

1.5.1.3 Testing Laboratory

Submit the name, address, and telephone number of the testing laboratory selected to perform the air and wipe sampling, testing, and reporting of airborne concentrations of lead. Use a laboratory accredited under the EPA National Lead Laboratory Accreditation Program (NLLAP) by either the American Association for Laboratory Accreditation (A2LA) or the American Industrial Hygiene Association (AIHA) and that is successfully participating in the Environmental Lead Proficiency Analytical Testing (ELPAT) program to perform sample analysis. Laboratories selected to perform blood lead analysis shall be OSHA approved.

1.5.1.4 Third Party Consultant Qualifications

Submit the name, address, and telephone number of the third party consultant selected to perform the wipe sampling for determining concentrations of lead in dust or soil sampling. Submit proper documentation that the consultant is trained and certified as an inspector technician or inspector/risk assessor by the USEPA authorized State (or local) certification and accreditation program.

1.5.2 Requirements

1.5.2.1 Competent Person (CP) Responsibilities

a. Verify training meets all federal, State, and local requirements.

b. Review and approve lead-based paint/paint with lead removal/control plan for conformance to the applicable standards. Ensure work is performed in strict accordance with specifications at all times.

c. Continuously inspect lead-based paint removal/control work for conformance with the approved plan.

d. Perform air and wipe sampling.

e. Control work to prevent hazardous exposure to human beings and to the environment at all times.

f. Certify the conditions of the work as called for elsewhere in this specification.

1.5.2.2 Lead-Based Paint/Paint with Lead Removal/Control Plan (LBP/PWL R/CP)

Submit a detailed job-specific plan of the work procedures to be used in the removal/control of LBP/PWL. The plan shall include a sketch showing the location, size, and details of lead control areas, location and details of decontamination facilities, viewing ports, and mechanical ventilation system. Include a description of equipment and materials, controls and job responsibilities for each activity from which lead is emitted. Include in the plan, eating, drinking, smoking and sanitary procedures, interface of trades, sequencing of lead related work, collected waste water and paint debris disposal plan, air sampling plan, respirators, personal protective equipment, and a detailed description of the method of containment of the operation to ensure that lead is not released outside the lead control area. Include site preparation, cleanup and clearance procedures. Include occupational and environmental sampling, training, sampling methodology, frequency, duration of sampling, and qualifications of sampling personnel in the air sampling portion of the plan. Include a description of arrangements made among contractors on multi-contractor worksites to inform affected employees and to clarify responsibilities to control exposures.

1.5.2.3 Occupational and Environmental Assessment Data Report

If initial monitoring is necessary, submit occupational and environmental sampling results to the Contracting Officer within three working days of collection, signed by the testing laboratory employee performing the analysis, the employee that performed the sampling, and the CP.

In order to reduce the full implementation of 29 CFR 1926.62, the Contractor shall provide documentation. Submit a report that supports the determination to reduce full implementation of the requirements of 29 CFR 1926.62 and supporting the Lead Removal/Control Plan.

a. The initial monitoring shall represent each job classification, or if working conditions are similar to previous jobs by the same employer, provide previously collected exposure data that can be used to estimate worker exposures per 29 CFR 1926.62. The data shall represent the worker's regular daily exposure to lead for stated work.

b. Submit worker exposure data gathered during the task based trigger operations of 29 CFR 1926.62 with a complete process description. This includes manual demolition, manual scraping, manual sanding, heat gun, power tool cleaning, rivet busting, cleanup of dry expendable abrasives, abrasive blast enclosure removal, abrasive blasting, welding, cutting and torch burning where lead containing coatings are present.

c. The initial assessment shall determine the requirement for further monitoring and the need to fully implement the control and protective requirements including the lead compliance plan per 29 CFR 1926.62.

1.5.2.4 Medical Examinations

Initial medical surveillance as required by 29 CFR 1926.62 shall be made available to all employees exposed to lead at any time (1 day) above the action level. Full medical surveillance shall be made available to all employees on an annual basis who are or may be exposed to lead in excess of the action level for more than 30 days a year or as required by 29 CFR 1926.62. Adequate records shall show that employees meet the medical surveillance requirements of 29 CFR 1926.33, 29 CFR 1926.62, and 29 CFR 1926.103. Maintain complete and accurate medical records of employees for a period of at least 30 years or for the duration of employment plus 30 years, whichever is longer.

1.5.2.5 Training

Train each employee performing paint removal, disposal, and air sampling operations prior to the time of initial job assignment and annually thereafter, in accordance with 29 CFR 1926.21, 29 CFR 1926.62, and State and local regulations where appropriate.

1.5.2.6 Respiratory Protection Program

a. Provide each employee required to wear a respirator a respirator fit test at the time of initial fitting and at least annually thereafter as required by 29 CFR 1926.62.

b. Establish and implement a respiratory protection program as required by AIHA Z88.6, 29 CFR 1926.103, 29 CFR 1926.62, and 29 CFR 1926.55.

1.5.2.7 Hazard Communication Program

Establish and implement a Hazard Communication Program as required by 29 CFR 1926.59.

1.5.2.8 Lead Waste Management

The Lead Waste Management Plan shall comply with applicable requirements of federal, State 16 VAC 25-35, and local hazardous waste regulations and address:

a. Identification and classification of hazardous wastes associated with the work.

b. Estimated quantities of wastes to be generated and disposed of.

c. Names and qualifications of each contractor that will be transporting, storing, treating, and disposing of the wastes. Include the facility

location and operator and a 24-hour point of contact. Furnish two copies of proof of EPA, State, and local hazardous waste permits manifests and EPA Identification numbers Transporter Number.

d. Names and qualifications (experience and training) of personnel who will be working on-site with hazardous wastes.

e. List of waste handling equipment to be used in performing the work, to include cleaning, volume reduction, and transport equipment.

f. Spill prevention, containment, and cleanup contingency measures including a health and safety plan to be implemented in accordance with 29 CFR 1926.65.

g. Work plan and schedule for waste containment, removal and disposal. Wastes shall be cleaned up and containerized daily. Proper containment of the waste includes using acceptable waste containers (e.g., 55-gallon drums) as well as proper marking/labeling of the containers.

h. Unit cost for waste disposal according to this plan.

1.5.2.9 Environmental, Safety and Health Compliance

In addition to the detailed requirements of this specification, comply with laws, ordinances, rules, and regulations of Federal, State, and local authorities regarding removing, handling, storing, transporting, and disposing of lead waste materials. Comply with the applicable requirements of the current issue of 29 CFR 1926.62. Submit matters regarding interpretation of standards to the Contracting Officer for resolution before starting work. Where specification requirements and the referenced documents vary, the most stringent requirement shall apply. The following State laws, ordinances, criteria, rules and regulations regarding removing, handling, storing, transporting, and disposing of lead-contaminated materials apply:

a. 16 VAC 25-35

Licensing and certification in the State of Virginia is required.

1.5.3 Pre-Construction Conference

Along with the CP, meet with the Contracting Officer to discuss in detail the lead waste management plan and the lead-based paint/paint with lead removal/control plan, including work procedures and precautions for the removal plan.

1.6 EQUIPMENT

1.6.1 Respirators

Furnish appropriate respirators approved by the National Institute for Occupational Safety and Health (NIOSH), Department of Health and Human Services, for use in atmospheres containing lead dust. Respirators shall comply with the requirements of 29 CFR 1926.62.

1.6.2 Special Protective Clothing

Furnish personnel who will be exposed to lead-contaminated dust with proper disposable protective whole body clothing, head covering, gloves, and foot

coverings as required by 29 CFR 1926.62. Furnish proper disposable plastic or rubber gloves to protect hands. Reduce the level of protection only after obtaining approval from the CP.

1.6.3 Rental Equipment Notification

If rental equipment is to be used during lead-based paint handling and disposal, notify the rental agency in writing concerning the intended use of the equipment. Furnish a copy of the written notification to the Contracting Officer.

1.6.4 Vacuum Filters

UL 586 labeled HEPA filters.

1.6.5 Equipment for Government Personnel

Furnish the Contracting Officer with two complete sets of personal protective equipment (PPE) daily, as required herein, for entry into and inspection of the paint removal work within the lead controlled area. Personal protective equipment shall include disposable whole body covering, including appropriate foot, head, and hand protection. PPE shall remain the property of the Contractor. The Government will provide respiratory protection for the Contracting Officer.

1.7 PROJECT/SITE CONDITIONS

1.7.1 Protection of Existing Work to Remain

Perform paint removal work without damage or contamination of adjacent areas. Where existing work is damaged or contaminated, restore work to its original condition or better.

PART 2 PRODUCTS

Section 01 35 26 GOVERNMENTAL SAFETY REQUIREMENTS.

PART 3 EXECUTION

3.1 PREPARATION

3.1.1 Protection

3.1.1.1 Notification

a. Notify the Contracting Officer 20 days prior to the start of any paint removal work.

b. Occupant Notification

c. Notification of the Commencement of LBP Hazard Abatement

Submit a copy of the notification of the commencement of LBP hazard abatement to Virginia Department of Labor and Industry according to the procedures established by 16 VAC 25-35.

3.1.1.2 Boundary Requirements

a. Provide physical boundaries around the lead control area by roping off

the area designated in the work plan or providing curtains, portable partitions or other enclosures to ensure that lead will not escape outside the lead control area.

b. Warning Signs - Provide warning signs at approaches to lead control areas. Locate signs at such a distance that personnel may read the sign and take the necessary precautions before entering the area. Signs shall comply with the requirements of 29 CFR 1926.62.

3.1.1.3 Furnishings

The Government will remove furniture and equipment from the building before lead-based paint removal work begins.

3.1.1.4 Heating, Ventilating and Air Conditioning (HVAC) Systems

Shut down, lock out, and isolate HVAC systems that supply, exhaust, or pass through the lead control areas. Seal intake and exhaust vents in the lead control area with 6 mil plastic sheet and tape. Seal seams in HVAC components that pass through the lead control area. Provide temporary HVAC system for areas in which HVAC has been shut down outside the lead control area.

3.1.1.5 Decontamination Shower Facility

Provide clean and contaminated change rooms and shower facilities in accordance with this specification and 29 CFR 1926.62.

3.1.1.6 Eye Wash Station

Where eyes may be exposed to injurious corrosive materials, suitable facilities for quick drenching or flushing of the eyes shall be provided within the work area.

3.1.1.7 Mechanical Ventilation System

a. Use adequate ventilation to control personnel exposure to lead in accordance with 29 CFR 1926.62.

b. To the extent feasible, use local exhaust ventilation connected to HEPA filters or other collection systems, approved by the CP. Local exhaust ventilation systems shall be evaluated and maintained in accordance with 29 CFR 1926.62.

c. Vent local exhaust outside the building only and away from building ventilation intakes.

d. Use locally exhausted, power actuated, paint removal tools.

3.1.1.8 Personnel Protection

Personnel shall wear and use protective clothing and equipment as specified herein. Eating, smoking, or drinking or application of cosmetics is not permitted in the lead control area. No one will be permitted in the lead control area unless they have been appropriately trained and provided with protective equipment.

3.2 ERECTION

3.2.1 Lead Control Area Requirements

Establish a lead control area by situating critical barriers and physical boundaries around the area or structure where LBP/PWL removal/control operations will be performed.

3.3 APPLICATION

3.3.1 Work Procedures

Perform removal of lead-based paint in accordance with approved lead-based paint/paint with lead removal/control plan. Use procedures and equipment required to limit occupational and environmental exposure to lead when lead-based paint is removed in accordance with 29 CFR 1926.62. Dispose of removed paint chips and associated waste in compliance with Environmental Protection Agency (EPA), State, and local requirements.

3.3.2 Lead-Based Paint Removal/Control/Deleading

Manual or power sanding of interior and exterior surfaces is not permitted unless tools are equipped with HEPA attachments or wet methods. The dry sanding or grinding of surfaces that contain lead is prohibited. Provide methodology for LBP removal/control in work plan. Remove paint within the areas designated on the drawings in order to completely expose the substrate. Take whatever precautions necessary to minimize damage to the underlying substrate.

Avoid deterioration of the substrate. Provide surface preparations for painting in accord with Section 09 90 00 PAINTS AND COATINGS.

Provide methodology for LBP/PWL abatement/control and processes to minimize contamination of work areas outside the control area with lead-contaminated dust or other lead-contaminated debris/waste and to ensure that unprotected personnel are not exposed to hazardous concentrations of lead. Describe this LBP/PWL removal/control process in the LBP/PWL R/CP.

3.3.2.1 Outdoor Paint Removal

Perform outdoor removal as indicated in federal, State, and local regulations and in the LBP/CPR/CP. The worksite preparation (barriers or containments) shall be job dependent and presented in the LBP/PWL R/CP.

3.3.3 Personnel Exiting Procedures

Whenever personnel exit the lead-controlled area, they shall perform the following procedures and shall not leave the work place wearing any clothing or equipment worn during the work day:

a. Vacuum themselves off.

b. Remove protective clothing in the contaminated change room, and place them in an approved impermeable disposal bag.

c. Wash hands and face at the site, don appropriate disposable or uncontaminated reusable clothing; move to an appropriate facility; shower.

d. Change to clean clothes prior to leaving the physical boundary designated around the lead control area.

3.4 FIELD QUALITY CONTROL

3.4.1 Tests

3.4.1.1 Air and Wipe Sampling

Air sample for lead in accordance with 29 CFR 1926.62 and as specified herein. Air and wipe sampling shall be directed or performed by the CP.

a. The CP shall be on the job site directing the air and non-clearance wipe sampling and inspecting the lead-based paint removal/control work to ensure that the requirements of the contract have been satisfied during the entire lead-based paint removal operation.

b. Collect personal air samples on employees who are expected to have the greatest risk of exposure as determined by the CP. In addition, collect air samples on at least 25 percent of the work crew or a minimum of two employees, whichever is greater, during each work shift.

c. Submit results of air samples, within 72 hours after the air samples are taken.

3.4.1.2 Air Sampling During Paint Removal Work

Conduct area air sampling daily, on each shift in which lead-based paint removal operations are performed, in areas immediately adjacent to the lead control area. Sufficient area monitoring shall be conducted to ensure unprotected personnel are not exposed at or above 30 micrograms per cubic meter of air. If 30 micrograms per cubic meter of air is reached or exceeded, stop work, correct the conditions(s) causing the increased levels. Notify the Contracting Officer immediately. Determine if condition(s) require any further change in work methods. Removal work shall resume only after the CP and the Contracting Officer give approval. For outdoor operations, at least one sample on each shift shall be taken on the downwind side of the lead control area.

3.4.1.3 Sampling After Paint Removal/Control

After the visual inspection, conduct soil sampling if bare soil is present during external removal/control operations and collect wipe samples according to the HUD protocol contained in HUD 6780 to determine the lead content of settled dust and dirt in micrograms per square meter foot of surface area and parts per million (ppm) for soil.

3.4.1.4 Testing of Removed Paint and Used Abrasive

Test removed paint and used abrasive in accordance with 40 CFR 261 for hazardous waste.

3.5 CLEANING AND DISPOSAL

3.5.1 Cleanup

Maintain surfaces of the lead control area free of accumulations of paint chips and dust. Restrict the spread of dust and debris; keep waste from being distributed over the work area. Do not dry sweep or use compressed

air to clean up the area. At the end of each shift and when the paint removal operation has been completed, clean the area of visible lead paint contamination by vacuuming with a HEPA filtered vacuum cleaner, wet mopping the area and wet wiping the area as indicated by the CP. Reclean areas showing dust or residual paint chips or debris. After visible dust, chips and debris is removed, wet wipe and HEPA vacuum all surfaces in the work area. If adjacent areas become contaminated at any time during the work, clean, visually inspect, and then wipe sample all contaminated areas. The CP shall then certify in writing that the area has been cleaned of lead contamination before restarting work.

3.5.1.1 Clearance Certification

The CP shall certify in writing that air samples collected outside the lead control area during paint removal operations are less than 30 micrograms per cubic meter of air; the respiratory protection used for the employees was adequate; the work procedures were performed in accordance with 29 CFR 1926.62 and 40 CFR 745; and that there were no visible accumulations of material and dust containing lead left in the work site. Do not remove the lead control area or roped off boundary and warning signs prior to the Contracting Officer's acknowledgement of receipt of the CP certification.

For exterior paint removal/control work, soil samples taken at the exterior of the work site shall be used to determine if soil lead levels had increased at a statistically significant level (significant at the 95 percent confidence limit) from the soil lead levels prior to the work. If soil lead levels do show a statistically significant increase or is above any applicable Federal or State standard for lead in soil, the soil shall be remediated back to the pre-work level.

Clear the lead control area in industrial facilities of all visible dust and debris.

For lead-based paint hazard abatement work, surface wipe and soil sampling shall be conducted and clearance determinations made according to the work practice standards presented in 40 CFR 745.227.

3.5.2 Disposal

a. Collect lead-contaminated waste, scrap, debris, bags, containers, equipment, and lead-contaminated clothing that may produce airborne concentrations of lead particles. Label the containers in accordance with 29 CFR 1926.62 and 40 CFR 262. Dispose of lead-contaminated waste material at an EPA or State approved hazardous waste treatment, storage, or disposal facility off Government property.

b. Place waste materials in U.S. Department of Transportation (49 CFR 178) approved 55 gallon drums. Properly label each drum to identify the type of waste (49 CFR 172) and the date the drum was filled. For hazardous waste, the collection drum requires marking/labeling in accordance with 40 CFR 262 during the accumulation/collection timeframe. The Contracting Officer or an authorized representative will assign an area for interim storage of waste-containing drums. Do not store hazardous waste drums in interim storage longer than 90 calendar days from the date affixed to each drum.

c. Handle, transport, and dispose lead or lead-contaminated material classified as hazardous waste in accordance with 40 CFR 260, 40 CFR 261, 40 CFR 262, 40 CFR 263, 40 CFR 264, and 40 CFR 265. Comply with land

disposal restriction notification requirements as required by 40 CFR 268.

d. All material, whether hazardous or non-hazardous shall be disposed in accordance with laws and provisions and Federal, State, or local regulations. Ensure waste is properly characterized. The result of each waste characterization (TCLP for RCRA materials) will dictate disposal requirements.

3.5.2.1 Disposal Documentation

Submit written evidence to demonstrate the hazardous waste treatment, storage, or disposal facility (TSD) is approved for lead disposal by the EPA, State or local regulatory agencies. Submit one copy of the completed hazardous waste manifest, signed and dated by the initial transporter in accordance with 40 CFR 262. Contractor shall provide a certificate that the waste was accepted by the disposal facility. Provide turn-in documents or weight tickets for non-hazardous waste disposal.

3.5.3 Payment for Hazardous Waste

Payment for disposal of hazardous and non-hazardous waste will not be made until a signed copy of the manifest from the treatment or disposal facility certifying the amount of lead-containing materials or non-hazardous waste delivered is returned and a copy is furnished to the Government.

-- End of Section --

SECTION 02 84 16

HANDLING OF LIGHTING BALLASTS AND LAMPS CONTAINING PCBs AND MERCURY
04/06

PART 1 GENERAL

1.1 REFERENCES

The publications listed below form a part of this specification to the extent referenced. The publications are referred to within the text by the basic designation only.

STATE OF VIRGINIA ADMINISTRATIVE CODE (VAC)

9 VAC 20-60	Title 9, Agency 20, Chapter 60: Hazardous Waste Management Regulations
9 VAC 20-80	Title 9, Agency 20, Chapter 80: Solid Waste Management Regulations

U.S. NATIONAL ARCHIVES AND RECORDS ADMINISTRATION (NARA)

29 CFR 1910.1000	Air Contaminants
40 CFR 260	Hazardous Waste Management System: General
40 CFR 261	Identification and Listing of Hazardous Waste
40 CFR 262	Standards Applicable to Generators of Hazardous Waste
40 CFR 263	Standards Applicable to Transporters of Hazardous Waste
40 CFR 264	Standards for Owners and Operators of Hazardous Waste Treatment, Storage, and Disposal Facilities
40 CFR 265	Interim Status Standards for Owners and Operators of Hazardous Waste Treatment, Storage, and Disposal Facilities
40 CFR 268	Land Disposal Restrictions
40 CFR 270	EPA Administered Permit Programs: The Hazardous Waste Permit Program
40 CFR 273	Standards For Universal Waste Management
40 CFR 761	Polychlorinated Biphenyls (PCBs) Manufacturing, Processing, Distribution in Commerce, and Use Prohibitions
49 CFR 178	Specifications for Packagings

1.2 REQUIREMENTS

Removal and disposal of PCB containing lighting ballasts and associated mercury-containing lamps. Contractor may encounter leaking PCB ballasts.

1.3 DEFINITIONS

1.3.1 Certified Industrial Hygienist (CIH)

A industrial hygienist hired by the contractor shall be certified by the American Board of Industrial Hygiene.

1.3.2 Leak

Leak or leaking means any instance in which a PCB article, PCB container, or PCB equipment has any PCBs on any portion of its external surface.

1.3.3 Lamps

Lamp, also referred to as "universal waste lamp", is defined as the bulb or tube portion of an electric lighting device. A lamp is specifically designed to produce radiant energy, most often in the ultraviolet, visible, and infra-red regions of the electromagnetic spectrum. Examples of common universal waste electric lamps include, but are not limited to, fluorescent, high intensity discharge, neon, mercury vapor, high pressure sodium, and metal halide lamps.

1.3.4 Polychlorinated Biphenyls (PCBs)

PCBs as used in this specification shall mean the same as PCBs, PCB containing lighting ballast, and PCB container, as defined in 40 CFR 761, Section 3, Definitions.

1.3.5 Spill

Spill means both intentional and unintentional spills, leaks, and other uncontrolled discharges when the release results in any quantity of PCBs running off or about to run off the external surface of the equipment or other PCB source, as well as the contamination resulting from those releases.

1.3.6 Universal Waste

Universal Waste means any of the following hazardous wastes that are managed under the universal waste requirements 40 CFR 273:

(1) Batteries as described in Sec. 273.2 of this chapter;
(2) Pesticides as described in Sec. 273.3 of this chapter;
(3) Thermostats as described in Sec. 273.4 of this chapter; and
(4) Lamps as described in Sec. 273.5 of this chapter.

1.4 QUALITY ASSURANCE

1.4.1 Regulatory Requirements

Perform PCB related work in accordance with 40 CFR 761 and 9 VAC 20-60 and 9 VAC 20-80. Perform mercury-containing lamps storage and transport in accordance with 40 CFR 261, 40 CFR 264, 40 CFR 265, 40 CFR 273 and 9 VAC 20-60 and 9 VAC 20-80.

1.4.2 Training

Certified industrial hygienist (CIH) shall instruct and certify the training of all persons involved in the removal of PCB containing lighting ballasts and mercury-containing lamps. The instruction shall include: The dangers of PCB and mercury exposure, decontamination, safe work practices, and applicable OSHA and EPA regulations. The CIH shall review and approve the PCB and Mercury-Containing Lamp Removal Work Plans.

1.4.3 Regulation Documents

Maintain at all times one copy each at the office and one copy each in view at the job site of 29 CFR 1910.1000, 40 CFR 260, 40 CFR 261, 40 CFR 262, 40 CFR 263, 40 CFR 265, 40 CFR 268, 40 CFR 270, 40 CFR 273 and 9 VAC 20-60 9 VAC 20-80 and of the Contractor removal work plan and disposal plan for PCB and for associated mercury-containing lamps.

1.5 SUBMITTALS

Government approval is required for submittals with a "G" designation; submittals not having a "G" designation are for Contractor Quality Control approval. When used, a designation following the "G" designation identifies the office that will review the submittal for the Government. The following shall be submitted in accordance with Section 01 33 00 SUBMITTAL PROCEDURES:

SD-07 Certificates

Qualifications of CIH; G

Training Certification; G

PCB and Lamp Removal Work Plan; G

PCB and Lamp Disposal Plan; G

SD-11 Closeout Submittals

Transporter certification of notification to EPA of their PCB waste activities and EPA ID numbers; G

Certification of Decontamination

Certificate of Disposal and/or recycling. Submit to the Government before application for payment within 30 days of the date that the disposal of the PCB and mercury-containing lamp waste identified on the manifest was completed.

DD Form 1348-1

1.6 ENVIRONMENTAL REQUIREMENTS

Use special clothing:

a. Disposable gloves (polyethylene)

b. Eye protection

c. PPE as required by CIH

1.7 SCHEDULING

Notify the Contracting Officer 20 days prior to the start of PCB and mercury-containing lamp removal work.

1.8 QUALITY ASSURANCE

1.8.1 Qualifications of CIH

Submit the name, address, and telephone number of the Industrial Hygienist selected to perform the duties in paragraph entitled "Certified Industrial Hygienist." Submit training certification that the Industrial Hygienist is certified, including certification number and date of certification or re certification.

1.8.2 PCB and Lamp Removal Work Plan

Submit a job-specific plan within 20 calendar days after award of contract of the work procedures to be used in the removal, packaging, and storage of PCB-containing lighting ballasts and associated mercury-containing lamps. Include in the plan: Requirements for Personal Protective Equipment (PPE), spill cleanup procedures and equipment, eating, smoking and restroom procedures. The plan shall be approved and signed by the Certified Industrial Hygienist. Obtain approval of the plan by the Contracting Officer prior to the start of PCB and/or lamp removal work.

1.8.3 PCB and Lamp Disposal Plan

Submit a PCB and lamp Disposal Plan with 45 calendar days after award of contract. The PCB and Lamp Disposal Plan shall comply with applicable requirements of federal, state, and local PCB and Universal waste regulations and address:

a. Estimated quantities of wastes to be generated, disposed of, and recycled.

b. Names and qualifications of each Contractor that will be transporting, storing, treating, and disposing of the wastes. Include the facility location. Furnish two copies of EPA and state PCB and mercury-containing lamp waste permit applications and EPA identification numbers, as required.

c. Names and qualifications (experience and training) of personnel who will be working on-site with PCB and mercury-containing lamp wastes.

d. Spill prevention, containment, and cleanup contingency measures to be implemented.

e. Work plan and schedule for PCB and mercury-containing lamp waste removal, containment, storage, transportation, disposal and or recycling. Wastes shall be cleaned up and containerize daily.

PART 2 PRODUCTS

Not used.

PART 3 EXECUTION

3.1 WORK PROCEDURE

Furnish labor, materials, services, and equipment necessary for the removal of PCB containing lighting ballasts, associated mercury-containing fluorescent lamps, and high intensity discharge (HID) lamps in accordance with local, state, or federal regulations. Do not expose PCBs to open flames or other high temperature sources since toxic decomposition by-products may be produced. Do not break mercury containing fluorescent lamps or high intensity discharge lamps.

3.1.1 Work Operations

Ensure that work operations or processes involving PCB or PCB-contaminated materials are conducted in accordance with 40 CFR 761, 40 CFR 262 40 CFR 263, and the applicable requirements of this section, including but not limited to:

a. Obtaining suitable PCB and mercury-containing lamp storage sites.

b. Notifying Contracting Officer prior to commencing the operation.

c. Reporting leaks and spills to the Contracting Officer.

d. Cleaning up spills.

e. Inspecting PCB and PCB-contaminated items and waste containers for leaks and forwarding copies of inspection reports to the Contracting Officer.

f. Maintaining inspection, inventory and spill records.

3.2 PCB SPILL CLEANUP REQUIREMENTS

3.2.1 PCB Spills

Immediately report to the Contracting Officer any PCB spills.

3.2.2 PCB Spill Control Area

Rope off an area around the edges of a PCB leak or spill and post a "PCB Spill Authorized Personnel Only" caution sign. Immediately transfer leaking items to a drip pan or other container.

3.2.3 PCB Spill Cleanup

40 CFR 761, subpart G. Initiate cleanup of spills as soon as possible, but no later than 24 hours of its discovery. Mop up the liquid with rags or other conventional absorbent. The spent absorbent shall be properly contained and disposed of as solid PCB waste.

3.2.4 Records and Certification

Document the cleanup with records of decontamination in accordance with 40 CFR 761, Section 125, Requirements for PCB Spill Cleanup. Provide test results of cleanup and certification of decontamination.

3.3 REMOVAL

3.3.1 Ballasts

As ballast are removed from the lighting fixture, inspect label on ballast. Ballasts without a "No PCB" label shall be assumed to contain PCBs and containerized and disposed of as required under paragraphs STORAGE FOR DISPOSAL and DISPOSAL. If there are less than 1600 "No PCB" labeled lighting ballasts dispose of them as normal demolition debris.

3.3.2 Lighting Lamps

Remove lighting tubes/lamps from the lighting fixture and carefully place (unbroken) into appropriate containers (original transport boxes or equivalent). In the event of a lighting tube/lamp breaking, sweep and place waste in double plastic taped bags and dispose of as universal waste as specified herein.

3.4 STORAGE FOR DISPOSAL

3.4.1 Storage Containers for PCBs

49 CFR 178. Store PCB in containers approved by DOT for PCB.

3.4.2 Storage Containers for lamps

Store mercury containing lamps in appropriate DOT containers. The boxes shall be stored and labeled for transport in accordance with 40 CFR 273.

3.4.3 Labeling of Waste Containers

Label with the following:

a. Date the item was placed in storage and the name of the cognizant activity/building.

b. "Caution Contains PCB," conforming to 40 CFR 761, CFR Subpart C. Affix labels to PCB waste containers.

c. Label mercury-containing lamp waste in accordance with 40 CFR 273. Affix labels to all lighting waste containers.

3.5 DISPOSAL

Dispose of off Government property in accordance with EPA, DOT, and local regulations at a permitted site.

3.5.1 Identification Number

Federal regulations 40 CFR 761, and 40 CFR 263 require that generators, transporters, commercial storers, and disposers of PCB waste posses U.S. EPA identification numbers. The contractor shall verify that the activity has a U.S. EPA generator identification number for use on the Uniform Hazardous Waste manifest. If not, the contractor shall advise the activity that it must file and obtain an I.D. number with EPA prior to commencement of removal work. For mercury containing lamp removal, Federal regulations 40 CFR 273 require that large quantity handlers of Universal waste (LQHUW) must provide notification of universal waste management to the appropriate EPA Region (or state director in authorized states), obtain an EPA

identification number, and retain for three years records of off-site shipments of universal waste. The contractor shall verify that the activity has a U.S. EPA generator identification number for use on the Universal Waste manifest. If not, the contractor shall advise the activity that it must file and obtain an I.D. number with EPA prior to commencement of removal work.

3.5.2 Transporter Certification

Comply with disposal and transportation requirements outlined in 40 CFR 761 and 40 CFR 263. Before transporting the PCB waste, sign and date the manifest acknowledging acceptance of the PCB waste from the Government. Return a signed copy to the Government before leaving the job site. Ensure that the manifest accompanies the PCB waste at all times. Submit transporter certification of notification to EPA of their PCB waste activities (EPA Form 7710-53).

3.5.2.1 Certificate of Disposal and/or Recycling

40 CFR 761. Certificate for the PCBs and PCB items disposed shall include:

a. The identity of the disposal and or recycling facility, by name, address, and EPA identification number.

b. The identity of the PCB waste affected by the Certificate of Disposal including reference to the manifest number for the shipment.

c. A statement certifying the fact of disposal and or recycling of the identified PCB waste, including the date(s) of disposal, and identifying the disposal process used.

d. A certification as defined in 40 CFR 761.

3.5.3 Disposal by the Government

Comply with disposal and transportation requirements outlined in 40 CFR 761 and 40 CFR 263.

3.5.3.1 Delivery

Contact DRMO at least 5 working days in advance to make arrangements for delivery of PCB to the storage site.

-- End of Section --

SECTION 03 30 00

CAST-IN-PLACE CONCRETE
11/11

PART 1 GENERAL

1.1 REFERENCES

The publications listed below form a part of this specification to the extent referenced. The publications are referred to within the text by the basic designation only.

AMERICAN ASSOCIATION OF STATE HIGHWAY AND TRANSPORTATION OFFICIALS (AASHTO)

AASHTO M 182	(2005; R 2009) Standard Specification for Burlap Cloth Made from Jute or Kenaf and Cotton Mats
AASHTO M 322M/M 322	(2010) Standard Specification for Rail-Steel and Axle-Steel Deformed Bars for Concrete Reinforcement

AMERICAN CONCRETE INSTITUTE INTERNATIONAL (ACI)

ACI 318	(2011; Errata 1 2011; Errata 2 2012; Errata 3-4 2013) Building Code Requirements for Structural Concrete and Commentary
ACI 121R	(2008) Guide for Concrete Construction Quality Systems in Conformance with ISO 9001
ACI SP-15	(2011) Field Reference Manual: Standard Specifications for Structural Concrete ACI 301-05 with Selected ACI References
ACI SP-2	(2007; Abstract: 10th Edition) ACI Manual of Concrete Inspection
ACI/MCP-1	(2013) Manual of Concrete Practice Part 1
ACI/MCP-2	(2013) Manual of Concrete Practice Part 2
ACI/MCP-3	(2013) Manual of Concrete Practice Part 3
ACI/MCP-4	(2013) Manual of Concrete Practice Part 4

AMERICAN HARDBOARD ASSOCIATION (AHA)

AHA A135.4	(1995; R 2004) Basic Hardboard

ASTM INTERNATIONAL (ASTM)

ASTM A1064/A1064M	(2013) Standard Specification for Carbon-Steel Wire and Welded Wire

	Reinforcement, Plain and Deformed, for Concrete
ASTM A53/A53M	(2012) Standard Specification for Pipe, Steel, Black and Hot-Dipped, Zinc-Coated, Welded and Seamless
ASTM A615/A615M	(2013) Standard Specification for Deformed and Plain Carbon-Steel Bars for Concrete Reinforcement
ASTM A767/A767M	(2009) Standard Specification for Zinc-Coated (Galvanized) Steel Bars for Concrete Reinforcement
ASTM C1017/C1017M	(2007) Standard Specification for Chemical Admixtures for Use in Producing Flowing Concrete
ASTM C1077	(2013) Standard Practice for Laboratories Testing Concrete and Concrete Aggregates for Use in Construction and Criteria for Laboratory Evaluation
ASTM C1107/C1107M	(2013) Standard Specification for Packaged Dry, Hydraulic-Cement Grout (Nonshrink)
ASTM C1218/C1218M	(1999; R 2008) Standard Specification for Water-Soluble Chloride in Mortar and Concrete
ASTM C1260	(2007) Standard Test Method for Potential Alkali Reactivity of Aggregates (Mortar-Bar Method)
ASTM C143/C143M	(2012) Standard Test Method for Slump of Hydraulic-Cement Concrete
ASTM C150/C150M	(2012) Standard Specification for Portland Cement
ASTM C156	(2011) Standard Test Method for Water Retention by Concrete Curing Materials
ASTM C1567	(2013) Standard Test Method for Potential Alkali-Silica Reactivity of Combinations of Cementitious Materials and Aggregate (Accelerated Mortar-Bar Method)
ASTM C1602/C1602M	(2012) Standard Specification for Mixing Water Used in Production of Hydraulic Cement Concrete
ASTM C171	(2007) Standard Specification for Sheet Materials for Curing Concrete
ASTM C172/C172M	(2010) Standard Practice for Sampling Freshly Mixed Concrete

ASTM C173/C173M	(2012) Standard Test Method for Air Content of Freshly Mixed Concrete by the Volumetric Method
ASTM C192/C192M	(2013a) Standard Practice for Making and Curing Concrete Test Specimens in the Laboratory
ASTM C233/C233M	(2011) Standard Test Method for Air-Entraining Admixtures for Concrete
ASTM C260/C260M	(2010a) Standard Specification for Air-Entraining Admixtures for Concrete
ASTM C295/C295M	(2012) Petrographic Examination of Aggregates for Concrete
ASTM C309	(2011) Standard Specification for Liquid Membrane-Forming Compounds for Curing Concrete
ASTM C31/C31M	(2012) Standard Practice for Making and Curing Concrete Test Specimens in the Field
ASTM C311/C311M	(2013) Sampling and Testing Fly Ash or Natural Pozzolans for Use as a Mineral Admixture in Portland-Cement Concrete
ASTM C33/C33M	(2013) Standard Specification for Concrete Aggregates
ASTM C39/C39M	(2012) Standard Test Method for Compressive Strength of Cylindrical Concrete Specimens
ASTM C42/C42M	(2013) Standard Test Method for Obtaining and Testing Drilled Cores and Sawed Beams of Concrete
ASTM C494/C494M	(2013) Standard Specification for Chemical Admixtures for Concrete
ASTM C567/C567M	(2011) Determining Density of Structural Lightweight Concrete
ASTM C595/C595M	(2013) Standard Specification for Blended Hydraulic Cements
ASTM C618	(2012a) Standard Specification for Coal Fly Ash and Raw or Calcined Natural Pozzolan for Use in Concrete
ASTM C78/C78M	(2012; E 2013) Standard Test Method for Flexural Strength of Concrete (Using Simple Beam with Third-Point Loading)
ASTM C881/C881M	(2010) Standard Specification for Epoxy-Resin-Base Bonding Systems for Concrete

ASTM C920	(2011) Standard Specification for Elastomeric Joint Sealants
ASTM C932	(2006; R 2013) Standard Specification for Surface-Applied Bonding Compounds for Exterior Plastering
ASTM C94/C94M	(2013a) Standard Specification for Ready-Mixed Concrete
ASTM C989/C989M	(2012a) Standard Specification for Slag Cement for Use in Concrete and Mortars
ASTM D1557	(2012) Standard Test Methods for Laboratory Compaction Characteristics of Soil Using Modified Effort (56,000 ft-lbf/ft3) (2700 kN-m/m3)
ASTM D1751	(2004; E 2013; R 2013) Standard Specification for Preformed Expansion Joint Filler for Concrete Paving and Structural Construction (Nonextruding and Resilient Bituminous Types)
ASTM D1752	(2004a; R 2008) Standard Specification for Preformed Sponge Rubber Cork and Recycled PVC Expansion
ASTM D2628	(1991; R 2011) Standard Specification for Preformed Polychloroprene Elastomeric Joint Seals for Concrete Pavements
ASTM D471	(2012a) Standard Test Method for Rubber Property - Effect of Liquids
ASTM D512	(2012) Chloride Ion in Water
ASTM D516	(2011) Sulfate Ion in Water
ASTM D5759	(2012) Characterization of Coal Fly Ash and Clean Coal Combustion Fly Ash for Potential Uses
ASTM D6690	(2012) Standard Specification for Joint and Crack Sealants, Hot Applied, for Concrete and Asphalt Pavements
ASTM D7116	(2005) Standard Specification for Joint Sealants, Hot Applied, Jet Fuel Resistant Types, for Portland Cement Concrete Pavement
ASTM E1745	(2011) Standard Specification for Water Vapor Retarders Used in Contact with Soil or Granular Fill under Concrete Slabs
ASTM E329	(2013b) Standard Specification for Agencies Engaged in the Testing and/or

	Inspection of Materials Used in Construction

CONCRETE REINFORCING STEEL INSTITUTE (CRSI)

CRSI 10MSP	(2009; 28th Ed) Manual of Standard Practice

NATIONAL INSTITUTE OF STANDARDS AND TECHNOLOGY (NIST)

NIST PS 1	(2009) DOC Voluntary Product Standard PS 1-07, Structural Plywood

U.S. ARMY CORPS OF ENGINEERS (USACE)

COE CRD-C 572	(1974) Corps of Engineers Specifications for Polyvinylchloride Waterstops

U.S. DEPARTMENT OF COMMERCE (DOC)

DOC/NIST PS1	(1995) Construction and Industrial Plywood with Typical APA Trademarks

U.S. GENERAL SERVICES ADMINISTRATION (GSA)

FS SS-S-200	(Rev E; Am 1; Notice 1) Sealant, Joint, Two-Component, Jet-Blast-Resistant, Cold-Applied, for Portland Cement Concrete Pavement

1.2 DEFINITIONS

a. "Cementitious material" as used herein must include all portland cement, pozzolan, fly ash, and ground granulated blast-furnace slag.

b. "Exposed to public view" means situated so that it can be seen from eye level from a public location after completion of the building. A public location is accessible to persons not responsible for operation or maintenance of the building.

c. "Chemical admixtures" are materials in the form of powder or fluids that are added to the concrete to give it certain characteristics not obtainable with plain concrete mixes.

d. "Workability (or consistence)" is the ability of a fresh (plastic) concrete mix to fill the form/mould properly with the desired work (vibration) and without reducing the concrete's quality. Workability depends on water content, chemical admixtures, aggregate (shape and size distribution), cementitious content and age (level of hydration).

1.3 SUBMITTALS

Government approval is required for submittals with a "G" designation; submittals not having a "G" designation are for Contractor Quality Control approval. Submit the following in accordance with Section 01 33 00 SUBMITTAL PROCEDURES:

SD-01 Preconstruction Submittals

Quality Control Plan

Quality Control Personnel Certifications
Quality Control Organizational Chart
Field Testing Technician and Testing Agency
Laboratory Accreditation

SD-02 Shop Drawings

Fabrication Drawings for concrete formwork must be submitted by the Contractor in accordance with paragraph entitled, "Shop Drawings," of this section, to include the following:

Formwork
Column Forms
Wall Forms

Reinforcing steel; G

Reproductions of contract drawings are unacceptable.

SD-03 Product Data

Materials for curing concrete; G
Joint sealants; G

Submit manufacturer's product data, indicating VOC content. Manufacturer's catalog data for the following items must include printed instructions for admixtures, bonding agents, epoxy-resin adhesive binders, waterstops, and liquid chemical floor hardeners.

Joint filler; G
Recycled Aggregate Materials
Cement; G
Portland Cement; G
Ready-Mix Concrete; G
Vapor barrier; G
Bonding Materials; G
Concrete Curing Materials; G
Reinforcement; G

Submit documentation indicating percentage of post-industrial and post-consumer recycled content per unit of product. Indicate relative dollar value of recycled content products to total dollar value of products included in project.

Vapor barrier; G

Epoxy bonding compound; G

Waterstops; G

SD-05 Design Data

Concrete mix design; G

Thirty days minimum prior to concrete placement, submit a mix design for each strength and type of concrete. Submit a complete list of materials including type; brand; source and amount of cement, fly ash, pozzolans, ground slag, and admixtures; and applicable reference specifications. Provide mix proportion data

using at least three different water-cement ratios for each type of mixture, which produce a range of strength encompassing those required for each class and type of concrete required. If source material changes, resubmit mix proportion data using revised source material. Provide only materials that have been proven by trial mix studies to meet the requirements of this specification, unless otherwise approved in writing by the Contracting Officer. Indicate clearly in the submittal where each mix design is used when more than one mix design is submitted. Submit additional data regarding concrete aggregates if the source of aggregate changes. Submit copies of the fly ash and pozzolan test results, in addition. The approval of fly ash and pozzolan test results must be within 6 months of submittal date. Obtain acknowledgement of receipt prior to concrete placement.

Calculations

SD-06 Test Reports

Concrete mix design; G

Fly ash; G

Pozzolan; G

Ground granulated blast-furnace slag; G

Aggregates; G

Compressive strength tests

Air Content; G

Slump; G

Air Entrainment

Ion Concentration

Water Soluble Chloride Ion Content

SD-07 Certificates

Curing concrete elements

Pumping concrete

Finishing plan

Form Removal Schedule

Biodegradable Form Release Agent

VOC Content for form release agents, curing compounds, and concrete penetrating sealers

Material Safety Data Sheets

SD-08 Manufacturer's Instructions

Fly ash

Ground granulated blast-furnace slag

Submit mill certificates for Steel Bar according to the paragraph entitled, "Fabrication," of this section.

Provide certificates for concrete that are in accordance with the paragraph entitled, "Classification and Quality of Concrete," of this section. Provide certificates that contain project name and number, date, name of Contractor, name of concrete testing service, source of concrete aggregates, material manufacturer, brand name of manufactured materials, material name, values as specified for each material, and test results. Provide certificates for Welder Qualifications that are in accordance with the paragraph entitled, "Qualifications for Welding Work," of this section.

SD-11 Closeout Submittals

1.4 MODIFICATION OF REFERENCES

Accomplish work in accordance with ACI publications except as modified herein. Consider the advisory or recommended provisions to be mandatory. Interpret reference to the "Building Official," the "Structural Engineer," and the "Architect/Engineer" to mean the Contracting Officer.

1.5 DELIVERY, STORAGE, AND HANDLING

Do not deliver concrete until vapor barrier, forms, reinforcement, embedded items, and chamfer strips are in place and ready for concrete placement. ACI/MCP-2 for job site storage of materials. Protect materials from contaminants such as grease, oil, and dirt. Ensure materials can be accurately identified after bundles are broken and tags removed. Do not store concrete curing compounds or sealers with materials that have a high capacity to adsorb volatile organic compound (VOC) emissions. Do not store concrete curing compounds or sealers in occupied spaces.

1.5.1 Reinforcement

Store reinforcement of different sizes and shapes in separate piles or racks raised above the ground. Protect from contaminants such as grease, oil, and dirt. Ensure bar sizes can be accurately identified after bundles are broken and tags removed.

1.6 QUALITY ASSURANCE

1.6.1 Design Data

1.6.2 Reinforcing Steel

ACI/MCP-4. Indicate bending diagrams, assembly diagrams, splicing and laps of bars, shapes, dimensions, and details of bar reinforcing, accessories, and concrete cover. Do not scale dimensions from structural drawings to determine lengths of reinforcing bars.

1.6.3 Control Submittals

1.6.3.1 Curing Concrete Elements

Submit proposed materials and methods for curing concrete elements.

1.6.3.2 Pumping Concrete

Submit proposed materials and methods for pumping concrete. Submittal must include mix designs, pumping equipment including type of pump and size and material for pipe, and maximum length and height concrete is to be pumped.

1.6.3.3 Finishing Plan

Submit proposed material and procedures to be used in obtaining the finish for the floors. Include qualification of person to be used for obtaining floor tolerance measurement, description of measuring equipment to be used, and a sketch showing lines and locations the measuring equipment will follow.

1.6.3.4 Form Removal Schedule

Submit schedule for form removal indicating element and minimum length of time for form removal.

1.6.3.5 VOC Content for form release agents, curing compounds, and concrete penetrating sealers

Submit certification for the form release agent, curing compounds, and concrete penetrating sealers that indicate the VOC content of each product.

1.6.3.6 Material Safety Data Sheets

Submit Material Safety Data Sheets (MSDS) for all materials that are regulated for hazardous health effects. Prominently post the MSDS at the construction site.

1.6.4 Test Reports

1.6.4.1 Concrete Mix Design

Submit copies of laboratory test reports showing that the mix has been successfully tested to produce concrete with the properties specified and that mix must be suitable for the job conditions. Include mill test and all other test for cement, aggregates, and admixtures in the laboratory test reports. Provide maximum nominal aggregate size, gradation analysis, percentage retained and passing sieve, and a graph of percentage retained verses sieve size. Submit test reports along with the concrete mix design. Obtain approval before concrete placement.

1.6.4.2 Fly Ash and Pozzolan

Submit test results in accordance with ASTM C618 for fly ash and pozzolan. Submit test results performed within 6 months of submittal date.

1.6.4.3 Ground Granulated Blast-Furnace Slag

Submit test results in accordance with ASTM C989/C989M for ground granulated blast-furnace slag. Submit test results performed within 6

months of submittal date.

1.6.4.4 Aggregates

ASTM C1260 for potential alkali-silica reactions, ASTM C295/C295M for petrographic analysis.

1.6.5 Special Finisher Qualifications

For 35 percent or more fly ash content as a percentage of cementitious materials, finisher must have a minimum of 3 years' experience finishing high-volume fly ash concrete.

1.6.6 Quality Control Plan

Develop and submit for approval a concrete quality control program in accordance with the guidelines of ACI 121R and as specified herein. The plan must include approved laboratories. Provide direct oversight for the concrete qualification program inclusive of associated sampling and testing. All quality control reports must be provided to the Contracting Officer, Quality Manager and Concrete Supplier. Maintain a copy of ACI SP-15 and CRSI 10MSP at project site.

1.6.7 Quality Control Personnel Certifications

The Contractor must submit for approval the responsibilities of the various quality control personnel, including the names and qualifications of the individuals in those positions and a quality control organizational chart defining the quality control hierarchy and the responsibility of the various positions. Quality control personnel must be employed by the Contractor.

Submit American Concrete Institute certification for the following:

a. CQC personnel responsible for inspection of concrete operations.

b. Lead Foreman or Journeyman of the Concrete Placing, Finishing, and Curing Crews.

c. Field Testing Technicians: ACI Concrete Field Testing Technician, Grade I.

1.6.7.1 Quality Manager Qualifications

The quality manager must hold a current license as a professional engineer in a U.S. state or territory with experience on at least five (5) similar projects. Evidence of extraordinary proven experience may be considered by the Contracting Officer as sufficient to act as the Quality Manager.

1.6.7.2 Field Testing Technician and Testing Agency

Submit data on qualifications of proposed testing agency and technicians for approval by the Contracting Officer prior to performing testing on concrete.

a. Work on concrete under this contract must be performed by an ACI Concrete Field Testing Technician Grade 1 qualified in accordance with ACI SP-2 or equivalent. Equivalent certification programs must include requirements for written and performance examinations as stipulated in

ACI SP-2.

b. Testing agencies that perform testing services on reinforcing steel must meet the requirements of ASTM E329.

c. Testing agencies that perform testing services on concrete materials must meet the requirements of ASTM C1077.

1.6.8 Laboratory Qualifications for Concrete Qualification Testing

The concrete testing laboratory must have the necessary equipment and experience to accomplish required testing. The laboratory must meet the requirements of ASTM C1077 and be Cement and Concrete Reference Laboratory (CCRL) inspected.

1.6.9 Laboratory Accreditation

Laboratory and testing facilities must be provided by and at the expense of the Contractor. The laboratories performing the tests must be accredited in accordance with ASTM C1077, including ASTM C78/C78M and ASTM C1260. The accreditation must be current and must include the required test methods, as specified. Furthermore, the testing must comply with the following requirements:

a. Aggregate Testing and Mix Proportioning: Aggregate testing and mixture proportioning studies must be performed by an accredited laboratory and under the direction of a registered professional engineer in a U.S. state or territory competent in concrete materials who is competent in concrete materials and must sign all reports and designs.

b. Acceptance Testing: Furnish all materials, labor, and facilities required for molding, curing, testing, and protecting test specimens at the site and in the laboratory. Furnish and maintain boxes or other facilities suitable for storing and curing the specimens at the site while in the mold within the temperature range stipulated by ASTM C31/C31M.

c. Contractor Quality Control: All sampling and testing must be performed by an approved, onsite, independent, accredited laboratory.

1.7 ENVIRONMENTAL REQUIREMENTS

Provide space ventilation according to manufacturer recommendations, at a minimum, during and following installation of concrete curing compound and sealer. Maintain one of the following ventilation conditions during the curing compound/sealer curing period or for 72 hours after installation:

a. Supply 100 percent outside air 24 hours a day.

b. Supply airflow at a rate of 6 air changes per hour, when outside temperatures are between 55 degrees F and 84 degrees F and humidity is between 30 percent and 60 percent.

c. Supply airflow at a rate of 1.5 air changes per hour, when outside air conditions are not within the range stipulated above.

1.7.1 Submittals for Environmental Performance

a. Provide data indication the percentage of post-industrial pozzolan (fly

ash, blast furnace slag) cement substitution as a percentage of the full product composite by weight.

b. Provide data indicating the percentage of post-industrial and post-consumer recycled content aggregate.

c. Provide product data indicating the percentage of post-consumer recycled steel content in each type of steel reinforcement as a percentage of the full product composite by weight.

d. Provide product data stating the location where all products were manufactured

e. For projects using FSC certified formwork, provide chain-of-custody documentation for all certified wood products.

f. For projects using reusable formwork, provide data showing how formwork is reused.

g. Provide MSDS product information data showing that form release agents meet any environmental performance goals such as using vegetable and soy based products.

h. Provide MSDS product information data showing that concrete adhesives meet any environmental performance goals including low emitting, low volatile organic compound products.

1.8 CONCRETE SAMPLING AND TESTING

Testing by the Contractor must include sampling and testing concrete materials proposed for use in the work and testing the design mix for each class of concrete. Perform quality control testing during construction.

Sample and test concrete aggregate materials proposed for use in the work in accordance with ASTM C33/C33M.

Sample and test portland cement in accordance with ASTM C150/C150M.

Sample and test air-entraining admixtures in accordance with ASTM C233/C233M.

Testing must be performed by a Grade I Testing Technician.

PART 2 PRODUCTS

2.1 MATERIALS FOR FORMS

Provide wood, plywood, plastic, carton, or steel. Use plywood or steel forms where a smooth form finish is required.

2.1.1 Wood Forms

Provide lumber that is square edged or tongue-and-groove boards, free of raised grain, knotholes, or other surface defects. Provide plywood that complies with DOC/NIST PS1, B-B concrete form panels or better or AHA A135.4, hardboard for smooth form lining.

2.1.1.1 Concrete Form Plywood (Standard Rough)

Provide plywood that conforms to NIST PS 1, B-B, concrete form, not less

than 5/8-inch thick.

2.1.1.2 Overlaid Concrete Form Plywood (Standard Smooth)

Provide plywood that conforms to NIST PS 1, B-B, high density form overlay, not less than 5/8-inch thick.

2.1.2 Carton Forms

Moisture resistant treated paper faces, biodegradable, structurally sufficient to support weight of wet concrete until initial set. Provide carton forms that contain a minimum of 5 percent post-consumer recycled content, or a minimum of 20 percent post-industrial recycled content.

2.1.3 Steel Forms

Provide steel form surfaces that do not contain irregularities, dents, or sags.

2.2 FORM TIES AND ACCESSORIES

The use of wire alone is prohibited. Provide form ties and accessories that do not reduce the effective cover of the reinforcement.

2.2.1 Polyvinylchloride Waterstops

COE CRD-C 572. Unless indicated otherwise, waterstops shall be a minimum of 3/16 inches by 6 inches wide ribbed-style with centerbulb. Only manufacturer's shop fabricated splice sections shall be used for waterstop splices at corners, intersections and angular joints.

2.2.2 Jet-Fuel Resistant Waterstop

Waterstops shall be made of synthetic rubber, thermoplastic elastomeric rubber, or other suitable compound material. Waterstop shall be able to withstand long-term exposure to jet fuel Type JP-5 and diesel fuel without failure or permanent deterioration and shall be tested in accordance with ASTM D471. Submit certification by the product manufacturer of the fuel resistancy of the waterstop.

Unless indicated otherwise, waterstops shall be a minimum of 3/16 inches by 6 inches wide ribbed-style with centerbulb. Only manufacturer's shop fabricated splice sections shall be used for waterstop splices at corners, intersections and angular joints.

Subject to compliance with the requirements, the following products may be provided:

a. TPE-R 619 by Westec Barrier Technologies (www.chemstop.com).

b. Petrostop VRB6-316 by Vinylex Corporation (www.vinylex.com).

c. TPE-Rubber Waterstop JP636 by Earth Shield (www.earthshield.com).

d. Other approved equal products.

2.2.3 Self-Expanding Strip Waterstop

Self-expanding strip waterstop shall be trapezoidal or rectangular in shape

products containing sodium bentonite, polymer modified chloroprene rubber, or other hydrophilic type compound that swells upon immersion in water. Unless indicated otherwise, provide approximately 1 inch by 3/4 inches minimum size waterstop. Waterstop size and configuration selected shall be suitable for the application. Provide fuel resistant type strip waterstop where indicated on the drawings.

2.2.4 Dovetail Anchor Slot

Preformed metal slot approximately 1 by 1 inch of not less than 22 gage galvanized steel cast in concrete. Coordinate actual size and throat opening with dovetail anchors and provide with removable filler material.

2.3 CONCRETE

2.3.1 Contractor-Furnished Mix Design

ACI/MCP-1, ACI/MCP-2, and ACI/MCP-3 except as otherwise specified. Indicate the compressive strength (f'c) of the concrete for each portion of the structure(s) and as specified below.

Location	f'c (Min. 28-Day Comp. Strength (psi)	ASTM C33/C33M Maximum Nominal Aggregate (Size No.)	Range of Slump (inches)	Maximum Water-Cement Ratio (by weight)	Air Entr. (percent)
All other areas not specifically identified otherwise	4000	67	2-4	0.45	6
Reinforced foundation walls and footings	4000	57	1-3	0.45	6
Beams and reinforced walls	4000	57	1-4	0.45	6
Dike walls	4000	57	1-4	0.40	6
Drive Slabs	5000	See Combined Aggregate Gradation	1-3	0.40	6 See Note (a)
Exterior containment floor slabs	4000	See Combined Aggregate Gradation	1-3	0.40	6 See Note(a)

Location	f'c (Min. 28-Day Comp. Strength (psi)	ASTM C33/C33M Maximum Nominal Aggregate (Size No.)	Range of Slump (inches)	Maximum Water-Cement Ratio (by weight)	Air Entr. (percent)
Walks, curbs and gutters	4000	57	1-4	0.45	6
Precast concrete	5000	57	1-4	0.40	6
Unreinforced concrete	2500	57	2-6	0.60	6

Maximum slump shown above may be increased 1 inch for methods of consolidation other than vibration. Slump may be increased to 8 inches when superplasticizers are used. Provide air entrainment using air-entraining admixture. Provide air entrainment within plus or minus 1.5 percent of the value specified. Note (a): Entrapped air must be 3 percent or less.

2.3.1.1 Mix Proportions for Normal Weight Concrete

Trial design batches, mixture proportioning studies, and testing requirements for various classes and types of concrete specified are the responsibility of the Contractor. Base mixture proportions on compressive strength as determined by test specimens fabricated in accordance with ASTM C192/C192M and tested in accordance with ASTM C39/C39M. Samples of all materials used in mixture proportioning studies must be representative of those proposed for use in the project and must be accompanied by the manufacturer's or producer's test report indicating compliance with these specifications. Base trial mixtures having proportions, consistencies, and air content suitable for the work on methodology described in ACI/MCP-1. In the trial mixture, use at least three different water-cement ratios for each type of mixture, which must produce a range of strength encompassing those required for each class and type of concrete required on the project. The maximum water-cement ratio required must be based on equivalent water-cement ratio calculations as determined by the conversion from the weight ratio of water to cement plus pozzolan, and ground granulated blast-furnace slag by weight equivalency method. Design laboratory trial mixture for maximum permitted slump and air content. Each combination of material proposed for use must have separate trial mixture, except for accelerator or retarder use can be provided without separate trial mixture. Report the temperature of concrete in each trial batch. For each water-cement ratio, at least three test cylinders for each test age must be made and cured in accordance with ASTM C192/C192M and tested in accordance with ASTM C39/C39M for 7 and 28 days. From these results, plot a curve showing the relationship between water-cement ratio and strength for each set of trial mix studies. In addition, plot a curve showing the relationship between 7 and 28 day strengths.

2.3.1.2 Required Average Strength of Mix Design

The selected mixture must produce an average compressive strength exceeding

the specified strength by the amount indicated in ACI/MCP-2. When a concrete production facility has a record of at least 15 consecutive tests, the standard deviation must be calculated and the required average compressive strength must be determined in accordance with ACI/MCP-2. When a concrete production facility does not have a suitable record of tests to establish a standard deviation, the required average strength must follow ACI/MCP-2 requirements.

2.3.1.3 Water Soluble Chloride Ion Content

Determine the chloride ion content only for qualification of concrete mixtures. Determine water soluble chloride ion content in accordance with ASTM C1218/C1218M. The water soluble chloride ion concentrations in hardened concrete at ages from 28 to 42 days must not exceed 0.08.

2.3.2 Ready-Mix Concrete

Provide concrete that meets the requirements of ASTM C94/C94M.

Ready-mixed concrete manufacturer must provide duplicate delivery tickets with each load of concrete delivered. Provide delivery tickets with the following information in addition to that required by ASTM C94/C94M:

a. Type and brand cement

b. Cement content in 94-pound bags per cubic yard of concrete

c. Maximum size of aggregate

d. Amount and brand name of admixtures

e. Total water content expressed by water/cement ratio

2.3.3 Concrete Curing Materials

2.3.3.1 Absorptive Cover

Provide burlap, cotton mats, and other absorbent materials for curing concrete, as described in ACI 308R.

2.3.3.2 Moisture-Retaining Cover

Provide waterproof paper cover for curing concrete conforming to ASTM C171, regular or white, or polyethylene sheeting conforming to ASTM C171, or polyethylene-coated burlap consisting of a laminate of burlap and a white opaque polyethylene film permanently bonded to the burlap; burlap must conform to ASTM C171, Class 3, and polyethylene film must conform to ASTM C171. When tested for water retention in accordance with ASTM C156, weight of water lost 72 hours after application of moisture retaining covering material must not exceed 0.039 gram per square centimeter of the mortar specimen surface.

2.3.3.3 Membrane-Forming Curing Compound

Provide liquid type compound conforming to ASTM C309, Type 1, clear, Type 1D with fugitive dye for interior work and Type 2, white, pigmented for exterior work.

2.4 MATERIALS

2.4.1 Cement

ASTM C150/C150M, Type II or ASTM C595/C595M, Type IP(MS) or IS(MS) blended cement except as modified herein. Provide blended cement that consists of a mixture of ASTM C150/C150M, Type II, cement and one of the following materials: ASTM C618 pozzolan or fly ash, ASTM C989/C989M ground granulated blast-furnace slag. For portland cement manufactured in a kiln fueled by hazardous waste, maintain a record of source for each batch. For exposed concrete, use one manufacturer for each type of cement, ground slag, fly ash, and pozzolan.

2.4.1.1 Fly Ash and Pozzolan

ASTM C618, Type F, except that the maximum allowable loss on ignition must be 6 percent for Types N and F. Add with cement. Fly ash content must be a minimum of 25 percent by weight of cementitious material, provided the fly ash does not reduce the amount of cement in the concrete mix below the minimum requirements of local building codes. Where the use of fly ash cannot meet the minimum level, provide the maximum amount of fly ash permittable that meets the code requirements for cement content. Report the chemical analysis of the fly ash in accordance with ASTM C311/C311M. Evaluate and classify fly ash in accordance with ASTM D5759.

High contents of supplementary cementitious materials can have some detrimental effects on the concrete properties, such as slowing excessively the strength gain rate, and delaying and increasing the difficulty of finishing. The recommended maximum content (by weight of the total cementitious material) for these materials are:

a. For GGBF slag: 50 percent

b. For fly ash or natural pozzolan: 40 percent (25 percent in cold climates)

2.4.1.2 Ground Granulated Blast-Furnace Slag

ASTM C989/C989M, Grade 120. Slag content must be a minimum of 50 percent by weight of cementitious material.

2.4.1.3 Portland Cement

Provide cement that conforms to ASTM C150/C150M, Type II or IIA. Use one brand and type of cement for formed concrete having exposed-to-view finished surfaces.

2.4.2 Water

Minimize the amount of water in the mix. The amount of water must not exceed 45 percent by weight of cementitious materials (cement plus pozzolans), and in general, improve workability by adjusting the grading rather than by adding water.

Water shall comply with the requirements of ASTM C94/C94M and ASTM C1602/C1602M, except that the chloride and sulfate limits as tested in accordance with ASTM D512 and ASTM D516 shall not exceed 500 parts per million chloride ion and not more than 1,000 parts per million of sulfate ion as SO4. Water shall be free from injurious amounts of oils, acids,

alkalis, salts,and organic materials. Where non-potable water or water from reprocessed concrete is proposed for use in the work, submit results

2.4.3 Aggregates

ASTM C33/C33M, except as modified herein. Furnish aggregates for exposed concrete surfaces from one source. Provide aggregates that do not contain any substance which may be deleteriously reactive with the alkalies in the cement.

Fine and coarse aggregates must show expansions less than 0.08 percent at 16 days after casting when testing in accordance with ASTM C1260. Should the test data indicate an expansion of 0.08 percent or greater, reject the aggregate(s) or perform additional testing using ASTM C1567 using the Contractor's proposed mix design. In this case, include the mix design low alkali portland cement and one of the following supplementary cementitious materials:

a. GGBF slag at a minimum of 40 percent of total cementitious

b. Fly ash or natural pozzolan at a minimum of total cementitious of

1. 30 percent if (SiO_2 plus Al_2O_3 plus Fe_2O_3) is 65 percent or more,

2. 25 percent if (SiO_2 plus Al_2O_3 plus Fe_2O_3) is 70 percent or more,

3. 20 percent if (SiO_2 plus Al_2O_3 plus Fe_2O_3) is 80 percent or more,

4. 15 percent if (SiO_2 plus Al_2O_3 plus Fe_2O_3) is 90 percent or more.

If a combination of these materials is chosen, the minimum amount must be a linear combination of the minimum amounts above. Include these materials in sufficient proportion to show less than 0.08 percent expansion at 16 days after casting when tested in accordance with ASTM C1567.

Aggregates must not possess properties or constituents that are known to have specific unfavorable effects in concrete when tested in accordance with ASTM C295/C295M.

2.4.3.1 Aggregates/Combined Aggregate Gradation (Floor Slabs Only)

ASTM C33/C33M, uniformly graded and as follows: Nominal maximum aggregate size of 1 inch. A combined sieve analysis must indicate a well graded aggregate from coarsest to finest with not more than 18 percent and not less than 8 percent retained on an individual sieve, except that less than 8 percent may be retained on coarsest sieve and on No. 50 (0.3mm) sieve, and less than 8 percent may be retained on sieves finer than No. 50 (0.3mm). Provide sand that is at least 50 percent natural sand.

2.4.3.2 Recycled Aggregate Materials

Recycled aggregate to include: concrete that meets the aggregate requirements specified. Submit recycled material request with the aggregate certification submittals and do not use until approved by the Contracting Officer.

2.4.4 Nonshrink Grout

ASTM C1107/C1107M.

2.4.5 Admixtures

ASTM C494/C494M: Type A, water reducing; Type B, retarding; Type C, accelerating; Type D, water-reducing and retarding; and Type E, water-reducing and accelerating admixture. Do not use calcium chloride admixtures.

2.4.5.1 Air-Entraining

ASTM C260/C260M.

2.4.5.2 High Range Water Reducer (HRWR) (Superplasticizers)

ASTM C494/C494M, Type F and ASTM C1017/C1017M.

2.4.5.3 Pozzolan

Provide fly ash or other pozzolans used as admixtures that conform to ASTM C618.

2.4.6 Vapor Barrier

ASTM E1745 Class A polyethylene sheeting, minimum 10 mil thickness or other equivalent material.

Consider plastic vapor retarders and adhesives with a high content, low toxicity low VOC (Volatile Organic Compounds) levels.

2.4.7 Materials for Curing Concrete

Use water-based curing compounds, sealers, and coatings with low (maximum 160 grams/liter, less water and less exempt compounds) VOC content.

2.4.7.1 Impervious Sheeting

ASTM C171; waterproof paper, clear or white polyethylene sheeting, or polyethylene-coated burlap.

2.4.7.2 Pervious Sheeting

AASHTO M 182.

2.4.7.3 Liquid Membrane-Forming Compound

ASTM C309, white-pigmented, Type 2, Class B. Where applicable, curing compound shall be compatible with the sealer-hardener to be used.

2.4.8 Liquid Penetrating Sealer-Hardener Compound

Compound shall be fuel-resistant penetrating formulation which will seal and harden the surface of the concrete. Compound shall resist penetration of oil, fuel, and chemicals. Compound shall not reduce the adhesion of resilient flooring, tile, paint, roofing, waterproofing, or other material applied to concrete. Compound shall be compatible with the curing compound used and shall not significantly alter the finish appearance and color of the concrete surface. Obtain approval from the Contracting Officer prior to use on this project based on sample of sealed concrete.

2.4.9 Expansion/Contraction Joint Filler

ASTM D1751, ASTM D1752, cork or 100 percent post-consumer paper meeting ASTM D1752 (subparagraphs 5.1 to 5.4). Material must be 1/2 inch thick, unless otherwise indicated. Use only ASTM D1752 Type II cork material in the areas with possible exposure to fuel.

2.4.10 Joint Sealants

2.4.10.1 Horizontal Surfaces, 3 Percent Slope, Maximum

ASTM D6690 or ASTM C920, Type M, Class 25, Use T. ASTM D7116 for surfaces subjected to jet fuel.

2.4.10.2 Vertical Surfaces Greater Than 3 Percent Slope

ASTM C920, Type M, Grade NS, Class 25, Use T. FS SS-S-200, no sag for jet fuel resistant application.

2.4.10.3 Waterstops

Provide waterstops made of polyvinylchloride (PVC) and that conform to ASTM D2628.

2.4.10.4 Joint Sealant Compound

Provide hot-poured, elastic type compound conforming to ASTM D6690.

2.4.11 Epoxy Bonding Compound

ASTM C881/C881M. Provide Type I for bonding hardened concrete to hardened concrete; Type II for bonding freshly mixed concrete to hardened concrete; and Type III as a binder in epoxy mortar or concrete, or for use in bonding skid-resistant materials to hardened concrete. Provide Grade 1 or 2 for horizontal surfaces and Grade 3 for vertical surfaces. Provide Class A if placement temperature is below 40 degrees F; Class B if placement temperature is between 40 and 60 degrees F; or Class C if placement temperature is above 60 degrees F.

2.4.12 Biodegradable Form Release Agent

Provide form release agent that is colorless, biodegradable, and water-based, with a low (grams/liter (g/l)) VOC content. Provide product that does not bond with, stain, or adversely affect concrete surfaces and does not impair subsequent treatments of concrete surfaces. Provide form release agent that does not contain diesel fuel, petroleum-based lubricating oils, waxes, or kerosene.

2.5 REINFORCEMENT

Galvanize bars, fabrics, connectors, and chairs.

2.5.1 Reinforcing Bars

ACI/MCP-2 unless otherwise specified. Use deformed steel. ASTM A615/A615M and AASHTO M 322M/M 322 with the bars marked A, S, W, Grade 60.

2.5.1.1 Galvanized Reinforcing Bars

Provide galvanized reinforcing bars that conform to ASTM A767/A767M, Class I with galvanizing before fabrication.

2.5.2 Mechanical Reinforcing Bar Connectors

ACI/MCP-2. Provide 125 percent minimum yield strength of the reinforcement bar.

2.5.3 Wire

ASTM A1064/A1064M.

2.5.3.1 Welded Wire Fabric

ASTM A1064/A1064M. Provide flat sheets of welded wire fabric for slabs and toppings. Welded wire fabric shall be galvanized.

2.5.3.2 Steel Wire

Wire must conform to ASTM A1064/A1064M.

2.5.4 Reinforcing Bar Supports

Provide bar ties and supports of coated or non corrodible material.

2.5.5 Chairs and Bolsters: Plastic Steel

Plastic and steel may contain post-consumer or post-industrial recycled content.

2.5.6 Dowels for Load Transfer in Floors

Provide dowels for load transfer in floors of the type, design, weight, and dimensions indicated. Provide dowel bars that are plain-billet steel conforming to ASTM A615/A615M, Grade 40. Provide dowel pipe that is steel conforming to ASTM A53/A53M.

2.5.7 Supports for Reinforcement

Supports include bolsters, chairs, spacers, and other devices necessary for proper spacing, supporting, and fastening reinforcing bars and wire fabric in place.

Provide wire bar type supports conforming to ACI/MCP-3, ACI/MCP-4 and CRSI 10MSP.

Legs of supports in contact with formwork must be hot-dip galvanized, or plastic coated after fabrication, or stainless-steel bar supports.

2.6 BONDING MATERIALS

2.6.1 Concrete Bonding Agent

Provide aqueous-phase, film-forming, nonoxidizing, freeze and thaw-resistant compound agent suitable for brush or spray application conforming to ASTM C932.

2.6.2 Epoxy-Resin Adhesive Binder

Provide two-component, epoxy-polysulfide polymer type binder with an amine-type curing-agent conforming to ASTM C881/C881M.

2.7 FLOOR FINISH MATERIALS

2.7.1 Liquid Chemical Floor Hardener

Hardener must be a colorless aqueous solution containing a blend of magnesium fluorosilicate and zinc fluorosilicate combined with a wetting agent. Solution must contain not less than 1/2 pounds of fluorosilicates per gallon. An approved proprietary chemical hardener may be used provided hardener is delivered ready for use in manufacturer's original containers.

2.8 CLASSIFICATION AND QUALITY OF CONCRETE

2.8.1 Concrete Classes and Usage

Provide concrete classes, compressive strength, requirements for air entrainment, and usage as follows:

CONCRETE CLASS	MIN. 28-DAY COMPRESSIVE STRENGTH POUNDS PER SQ. IN.	REQUIREMENT FOR AIR ENTRAINMENT	USAGE
4A	4000	Air-entrained	For structural concrete work exposed to freezing and thawing, unless otherwise indicated or specified, such as exterior columns and spandrels
4N	4000	Nonair-entrained	For structural concrete work not exposed to freezing and thawing such as interior columns, beams, supported slabs and other structural members for interior slabs on ground subjected to foot traffic
2.5A	2500	Air-entrained	For concrete not reinforced and not exposed to freezing and thawing
2.5N	2500	Nonair-entrained	For concrete not reinforced and not exposed to freezing and thawing

CONCRETE CLASS	MIN. 28-DAY COMPRESSIVE STRENGTH POUNDS PER SQ. IN.	REQUIREMENT FOR AIR ENTRAINMENT	USAGE
5A	5000	Air-entrained	For structural concrete work as indicated
5N	5000	Nonair-entrained	For structural concrete work as indicated

2.8.2 Limits for Concrete Proportions

Provide limits for maximum water/cement ratio and minimum cement content for each concrete class as follows:

CONCRETE CLASS	MAX. WATER/CEMENT RATIO BY WEIGHT	MIN. CEMENT FOR 3- TO 4-INCH SLUMP, (NO. OF 94-POUND SACKS) PER CU. YD.
2.5A	0.58	4.75
2.5N	0.62	4.75
4A	0.46	6.0
4N	0.48	6.0
5A	0.41	6.5
5N	0.44	6.5
* Weight of water to weight of cement in pounds in one cubic yard of concrete.		

2.8.3 Maximum Size of Aggregate

Size of aggregate, designated by the sieve size on which maximum amount of retained coarse aggregate is 5 to 10 percent by weight, must be as follows:

MAXIMUM SIZE OF AGGREGATE	ASTM C33/C33M SIZE NUMBER	TYPE OF CONSTRUCTION

3/4 inch	67	Reinforced walls, columns, girders, beams, and other formed sections having a dimension between forms of not less than 6 inches and clear distance between reinforcing bars or reinforcing bar and face of form of not less than 1 inch
3/4 inch	67	Monolithic concrete slabs and other flatwork having a depth of not less than 2-1/2 inches and a clear distance between reinforcing bars of not less than 1 inch

Maximum size of aggregate may be that required for most critical type of construction using that concrete class.

Specify gradation of aggregates for separate floor topping.

2.8.4 Slump

Provide slump for concrete at time and in location of placement as follows:

TYPE OF CONSTRUCTION	SLUMP
Footings, unreinforced walls	Not less than 1 inch nor more than 3 inches
Columns, beams, reinforced walls, monolithic slabs	Not less than 1 inch nor more than 4 inches
Ramps and other sloping surfaces	0 nor more than 3 inches

2.8.5 Total Air Content

Air content of exposed concrete and interior concrete must be in accordance with ASTM C260/C260M and/or as follows:

LIMITS OF CONCRETE EXPOSURE	REQUIREMENT FOR AIR ENTRAINMENT	MAXIMUM SIZE OF AGGREGATE	TOTAL AIR CONTENT BY VOLUME
Exposed to freezing and thawing or subjected to hydraulic pressure	Air-entrained	1-1/2 or 2 inches	4 to 6 percent
		3/4 inch	5 to 7 percent
		1/2 or 3/8 inch	6 to 8.5 percent

Provide concrete exposed to freezing and thawing or subjected to hydraulic pressure that is air-entrained by addition of approved air-entraining admixture to concrete mix.

PART 3 EXECUTION

3.1 EXAMINATION

Do not begin installation until substrates have been properly constructed; verify that substrates are plumb and true.

If substrate preparation is the responsibility of another installer, notify Architect/Engineer of unsatisfactory preparation before processing.

Check field dimensions before beginning installation. If dimensions vary too much from design dimensions for proper installation, notify Architect/Engineer and wait for instructions before beginning installation.

3.2 PREPARATION

Determine quantity of concrete needed and minimize the production of excess concrete. Designate locations or uses for potential excess concrete before the concrete is poured.

3.2.1 General

Surfaces against which concrete is to be placed must be free of debris, loose material, standing water, snow, ice, and other deleterious substances before start of concrete placing.

Remove standing water without washing over freshly deposited concrete. Divert flow of water through side drains provided for such purpose.

3.2.2 Subgrade Under Foundations and Footings

When subgrade material is semiporous and dry, sprinkle subgrade surface with water as required to eliminate suction at the time concrete is deposited. When subgrade material is porous, seal subgrade surface by covering surface with specified vapor retarder; this may also be used over semiporous, dry subgrade material instead of water sprinkling.

3.2.3 Subgrade Under Slabs on Ground

Before construction of slabs on ground, have underground work on pipes and conduits completed and approved.

Previously constructed subgrade or fill must be cleaned of foreign materials and inspected by the Contractor for adequate compaction and surface tolerances as specified.

Actual density of top 12 inches of subgrade soil material-in-place must not be less than the following percentages of maximum density of same soil material compacted at optimum moisture content in accordance with ASTM D1557.

SOIL MATERIAL	PERCENT MAXIMUM DENSITY
Capillary water barrier	100
Cohesionless soil material	100
Cohesive soil material	95

Finish surface of capillary water barrier under interior slabs on ground must not show deviation in excess of 1/4 inch when tested with a 10-foot straightedge parallel with and at right angles to building lines.

Finished surface of subgrade or fill under exterior slabs on ground must not be more than 0.02-foot above or 0.10-foot below elevation indicated.

Prepare subgrade or fill surface under exterior slabs on ground as specified for subgrade under foundations and footings.

3.2.4 Formwork

Complete and approve formwork. Remove debris and foreign material from interior of forms before start of concrete placing.

3.2.5 Edge Forms and Screed Strips for Slabs

Set edge forms or bulkheads and intermediate screed strips for slabs to obtain indicated elevations and contours in finished slab surface and must be strong enough to support vibrating bridge screeds or roller pipe screeds if nature of specified slab finish requires use of such equipment. Align concrete surface to elevation of screed strips by use of strike-off templates or approved compacting-type screeds.

3.2.6 Reinforcement and Other Embedded Items

Secure reinforcement, joint materials, and other embedded materials in position, inspected, and approved before start of concrete placing.

3.3 FORMS

ACI/MCP-2. Provide forms, shoring, and scaffolding for concrete placement. Set forms mortar-tight and true to line and grade. Chamfer above grade exposed joints, edges, and external corners of concrete 0.75 inch unless otherwise indicated. Provide formwork with clean-out openings to permit inspection and removal of debris. Forms submerged in water must be watertight.

3.3.1 General

Construct forms to conform, within the tolerances specified, to shapes dimensions, lines, elevations, and positions of cast-in-place concrete members as indicated. Forms must be supported, braced, and maintained sufficiently rigid to prevent deformation under load.

3.3.2 Design and Construction of Formwork

Provide formwork design and construction that conforms to ACI/MCP-2, Chapter 4.

Provide forms that are tight to prevent leakage of cement paste during concrete placing.

Support form facing materials by structural members spaced close to prevent deflection of form facing material. Fit forms placed in successive units for continuous surfaces to accurate alignment to ensure a smooth completed surface within the tolerances specified. Where necessary to maintain the tolerances specified, such as long spans where immediate supports are not possible, camber formwork for anticipated deflections in formwork due to weight and pressure of fresh concrete and to construction loads.

Chamfer exposed joints, edges, and external corners a minimum of 3/4 inch by moldings placed in corners of column, beam, and wall forms.

Provide shores and struts with a positive means of adjustment capable of taking up formwork settlement during concrete placing operations. Obtain adjustment with wedges or jacks or a combination thereof. When adequate foundations for shores and struts cannot be secured, provide trussed supports.

Provide temporary openings in wall forms, column forms, and at other points where necessary to permit inspection and to facilitate cleaning.

Provide forms that are readily removable without impact, shock, or damage to concrete.

3.3.3 Coating

Before concrete placement, coat the contact surfaces of forms with a nonstaining mineral oil, nonstaining form coating compound, or two coats of nitrocellulose lacquer. Do not use mineral oil on forms for surfaces to which adhesive, paint, or other finish material is to be applied.

3.3.4 Reshoring

Reshore concrete elements where forms are removed prior to the specified time period. Do not permit elements to deflect or accept loads during form stripping or reshoring. Forms on columns, walls, or other load-bearing members may be stripped after 2 days if loads are not applied to the members. After forms are removed, reshore slabs and beams over 10 feet in span and cantilevers over 4 feet for the remainder of the specified time period in accordance with paragraph entitled "Removal of Forms." Perform reshoring operations to prevent subjecting concrete members to overloads, eccentric loading, or reverse bending. Provide reshoring elements with the same load-carrying capabilities as original shoring and spaced similar to original shoring. Firmly secure and brace reshoring elements to provide solid bearing and support.

3.3.5 Reuse

Reuse forms providing the structural integrity of concrete and the aesthetics of exposed concrete are not compromised.

3.3.6 Forms for Standard Rough Form Finish

Give rough form finish concrete formed surfaces that are to be concealed by other construction, unless otherwise specified.

Form facing material for standard rough form finish must be the specified concrete form plywood or other approved form facing material that produces concrete surfaces equivalent in smoothness and appearance to that produced by new concrete form plywood panels.

For concrete surfaces exposed only to the ground, undressed, square-edge, 1-inch nominal thickness lumber may be used. Provide horizontal joints that are level and vertical joints that are plumb.

3.3.7 Forms for Standard Smooth Form Finish

Give smooth form finish concrete formed surfaces that are to be exposed to view or that are to be covered with coating material applied directly to concrete or with covering material bonded to concrete, such as waterproofing, dampproofing, painting, or other similar coating system.

Form facing material for standard smooth finish must be the specified overlaid concrete form plywood or other approved form facing material that is nonreactive with concrete and that produce concrete surfaces equivalent in smoothness and appearance to that produced by new overlaid concrete form plywood panels.

Maximum deflection of form facing material between supports and maximum deflection of form supports such as studs and wales must not exceed 0.0025 times the span.

Provide arrangement of form facing sheets that are orderly and symmetrical, and sheets that are in sizes as large as practical.

Arrange panels to make a symmetrical pattern of joints. Horizontal and vertical joints must be solidly backed and butted tight to prevent leakage and fins.

3.3.8 Form Ties

Provide ties that are factory fabricated metal, adjustable in length, removable or snap-off type that do allow form deflection or do not spall concrete upon removal. Portion of form ties remaining within concrete after removal of exterior parts must be at least 1-1/2 inches back from concrete surface. Provide form ties that are free of devices that leave a hole larger than 7/8 inch or less than 1/2 inch in diameter in concrete surface. Form ties fabricated at the project site or wire ties of any type are not acceptable.

3.3.9 Tolerances for Form Construction

Construct formwork to ensure that after removal of forms and prior to patching and finishing of formed surfaces, provide concrete surfaces in accordance with tolerances specified in ACI/MCP-1 and ACI/MCP-2.

3.3.10 Removal of Forms and Supports

After placing concrete, forms must remain in place for the time periods specified in ACI/MCP-4. Do not remove forms and shores (except those used for slabs on grade and slip forms) until the client determines that the concrete has gained sufficient strength to support its weight and superimposed loads. Base such determination on compliance with one of the following:

a. The plans and specifications stipulate conditions for removal of forms and shores, and such conditions have been followed, or

b. The concrete has been properly tested with an appropriate ASTM standard test method designed to indicate the concrete compressive strength, and the test results indicate that the concrete has gained sufficient strength to support its weight and superimposed loads.

Prevent concrete damage during form removal. Clean all forms immediately after removal.

3.3.10.1 Special Requirements for Reduced Time Period

Forms may be removed earlier than specified if ASTM C39/C39M test results of field-cured samples from a representative portion of the structure indicate that the concrete has reached a minimum of 85 percent of the design strength.

3.4 WATERSTOP SPLICES

Fusion weld in the field.

3.5 FORMED SURFACES

3.5.1 Preparation of Form Surfaces

Coat contact surfaces of forms with form-coating compound before reinforcement is placed. Provide a commercial formulation form-coating compound that does not bond with, stain, nor adversely affect concrete surfaces and impair subsequent treatment of concrete surfaces that entails bonding or adhesion nor impede wetting of surfaces to be cured with water or curing compounds. Do not allow excess form-coating compound to stand in puddles in the forms nor to come in contact with concrete against which

fresh concrete is placed. Make thinning of form-coating compound with thinning agent of the type, in the amount, and under the conditions recommended by form-coating compound manufacturer's printed or written directions.

3.5.2 Tolerances

ACI/MCP-4 and as indicated.

3.5.3 As-Cast Form

Provide form facing material producing a smooth, hard, uniform texture on the concrete. Arrange facing material in an orderly and symmetrical manner and keep seams to a practical minimum. Support forms as necessary to meet required tolerances. Do not use material with raised grain, torn surfaces, worn edges, patches, dents, or other defects which can impair the texture of the concrete surface.

3.6 PLACING REINFORCEMENT AND MISCELLANEOUS MATERIALS

ACI/MCP-2. Provide bars, wire fabric, wire ties, supports, and other devices necessary to install and secure reinforcement. Reinforcement must not have rust, scale, oil, grease, clay, or foreign substances that would reduce the bond. Rusting of reinforcement is a basis of rejection if the effective cross-sectional area or the nominal weight per unit length has been reduced. Remove loose rust prior to placing steel. Tack welding is prohibited.

3.6.1 General

Provide details of reinforcement that are in accordance with ACI/MCP-3 and ACI/MCP-4 and as specified.

3.6.2 Vapor Barrier

Provide beneath the on-grade concrete floor slab. Use the greatest widths and lengths practicable to eliminate joints wherever possible. Lap joints a minimum of 12 inches and tape joints. Remove torn, punctured, or damaged vapor barrier material and provide with new vapor barrier prior to placing concrete. Concrete placement must not damage vapor barrier material. Place a 2 inch layer of clean concrete sand on vapor barrier before placing concrete.

3.6.3 Reinforcement Supports

Place reinforcement and secure with galvanized or non corrodible chairs, spacers, or metal hangers. For supporting reinforcement on the ground, use concrete or other non corrodible material, having a compressive strength equal to or greater than the concrete being placed.

3.6.4 Splicing

As indicated. For splices not indicated ACI/MCP-2. Do not splice at points of maximum stress. Overlap welded wire fabric the spacing of the cross wires, plus 2 inches.

3.6.5 Future Bonding

Plug exposed, threaded, mechanical reinforcement bar connectors with a

greased bolt. Provide bolt threads that match the connector. Countersink the connector in the concrete. Caulk the depression after the bolt is installed.

3.6.6 Cover

ACI/MCP-2 for minimum coverage, unless otherwise indicated.

3.6.7 Setting Miscellaneous Material

Place and secure anchors and bolts, pipe sleeves, conduits, and other such items in position before concrete placement. Plumb anchor bolts and check location and elevation. Temporarily fill voids in sleeves with readily removable material to prevent the entry of concrete.

3.6.8 Construction Joints

Locate joints to least impair strength. Continue reinforcement across joints unless otherwise indicated.

3.6.9 Expansion Joints and Contraction Joints

Provide expansion joint at edges of interior floor slabs on grade abutting vertical surfaces, and as indicated. Make expansion joints 1/2 inch wide unless indicated otherwise. Fill expansion joints not exposed to weather with preformed joint filler material. Completely fill joints exposed to weather with joint filler material and joint sealant. Do not extend reinforcement or other embedded metal items bonded to the concrete through any expansion joint unless an expansion sleeve is used. Provide contraction joints, either formed or saw cut or cut with a jointing tool, to the indicated depth after the surface has been finished. Complete saw joints within 4 to 12 hours after concrete placement. Protect joints from intrusion of foreign matter.

3.6.10 Fabrication

Shop fabricate reinforcing bars to conform to shapes and dimensions indicated for reinforcement, and as follows:

a. Provide fabrication tolerances that are in accordance with ACI/MCP-1, ACI/MCP-2 and ACI/MCP-3.

b. Provide hooks and bends that are in accordance with ACI/MCP-3 and ACI/MCP-4.

Reinforcement must be bent cold to shapes as indicated. Bending must be done in the shop. Rebending of a reinforcing bar that has been bent incorrectly is not be permitted. Bending must be in accordance with standard approved practice and by approved machine methods.

Tolerance on nominally square-cut, reinforcing bar ends must be in accordance with ACI/MCP-3.

Deliver reinforcing bars bundled, tagged, and marked. Tags must be metal with bar size, length, mark, and other information pressed in by machine. Marks must correspond with those used on the placing drawings.

Do not use reinforcement that has any of the following defects:

a. Bar lengths, depths, and bends beyond specified fabrication tolerances

b. Bends or kinks not indicated on drawings or approved shop drawings

c. Bars with reduced cross-section due to rusting or other cause

Replace defective reinforcement with new reinforcement having required shape, form, and cross-section area.

3.6.11 Placing Reinforcement

Place reinforcement in accordance with ACI/MCP-3 and ACI/MCP-4.

For slabs on grade (over earth or over capillary water barrier) and for footing reinforcement, support bars or welded wire fabric on precast concrete blocks, spaced at intervals required by size of reinforcement, to keep reinforcement the minimum height specified above the underside of slab or footing.

For slabs other than on grade, supports for which any portion is less than 1 inch from concrete surfaces that are exposed to view or to be painted must be of precast concrete units, plastic-coated steel, or stainless steel protected bar supports. Precast concrete units must be wedge shaped, not larger than 3-1/2 by 3-1/2 inches, and of thickness equal to that indicated for concrete protection of reinforcement. Provide precast units that have cast-in galvanized tie wire hooked for anchorage and blend with concrete surfaces after finishing is completed.

Contractor must cooperate with other trades in setting of anchor bolts, inserts, and other embedded items. Where conflicts occur between locating reinforcing and embedded items, the Contractor must notify the Contracting Officer so that conflicts may be reconciled before placing concrete. Anchors and embedded items must be positioned and supported with appropriate accessories.

Provide reinforcement that is supported and secured together to prevent displacement by construction loads or by placing of wet concrete, and as follows:

Provide supports for reinforcing bars that are sufficient in number and sufficiently heavy to carry the reinforcement they support, and in accordance with ACI/MCP-3, ACI/MCP-4 and CRSI 10MSP. Do not use supports to support runways for concrete conveying equipment and similar construction loads.

a. Equip supports on ground and similar surfaces with sand-plates.

b. Support welded wire fabric as required for reinforcing bars.

c. Secure reinforcements to supports by means of tie wire. Wire must be black, soft iron wire, not less than 16 gage.

d. With the exception of temperature reinforcement, tied to main steel approximately 24 inches on center, reinforcement must be accurately placed, securely tied at intersections with 18-gage annealed wire, and held in position during placing of concrete by spacers, chairs, or other approved supports. Point wire-tie ends away from the form. Unless otherwise indicated, numbers, type, and spacing of supports must conform to ACI/MCP-3.

e. Bending of reinforcing bars partially embedded in concrete is permitted only as specified in ACI/MCP-3 and ACI/MCP-4.

3.6.12 Spacing of Reinforcing Bars

Spacing must be as indicated. If not indicated, spacing must be in accordance with the ACI/MCP-3 and ACI/MCP-4.

Reinforcing bars may be relocated to avoid interference with other reinforcement, or with conduit, pipe, or other embedded items. If any reinforcing bar is moved a distance exceeding one bar diameter or specified placing tolerance, resulting rearrangement of reinforcement is subject to approval.

3.6.13 Concrete Protection for Reinforcement

Concrete protection must be in accordance with the ACI/MCP-3 and ACI/MCP-4.

3.7 BATCHING, MEASURING, MIXING, AND TRANSPORTING CONCRETE

ASTM C94/C94M, and ACI/MCP-2, except as modified herein. Batching equipment must be such that the concrete ingredients are consistently measured within the following tolerances: 1 percent for cement and water, 2 percent for aggregate, and 3 percent for admixtures. Furnish mandatory batch ticket information for each load of ready mix concrete.

3.7.1 Measuring

Make measurements at intervals as specified in paragraphs entitled "Sampling" and "Testing."

3.7.2 Mixing

ASTM C94/C94M and ACI/MCP-2. Machine mix concrete. Begin mixing within 30 minutes after the cement has been added to the aggregates. Place concrete within 90 minutes of either addition of mixing water to cement and aggregates or addition of cement to aggregates if the air temperature is less than 84 degrees F. Reduce mixing time and place concrete within 60 minutes if the air temperature is greater than 84 degrees F except as follows: if set retarding admixture is used and slump requirements can be met, limit for placing concrete may remain at 90 minutes. Additional water may be added, provided that both the specified maximum slump and water-cement ratio are not exceeded. When additional water is added, an additional 30 revolutions of the mixer at mixing speed is required. If the entrained air content falls below the specified limit, add a sufficient quantity of admixture to bring the entrained air content within the specified limits. Dissolve admixtures in the mixing water and mix in the drum to uniformly distribute the admixture throughout the batch.

3.7.3 Transporting

Transport concrete from the mixer to the forms as rapidly as practicable. Prevent segregation or loss of ingredients. Clean transporting equipment thoroughly before each batch. Do not use aluminum pipe or chutes. Remove concrete which has segregated in transporting and dispose of as directed.

3.8 PLACING CONCRETE

Place concrete as soon as practicable after the forms and the reinforcement have been inspected and approved. Do not place concrete when weather conditions prevent proper placement and consolidation; in uncovered areas during periods of precipitation; or in standing water. Prior to placing concrete, remove dirt, construction debris, water, snow, and ice from within the forms. Deposit concrete as close as practicable to the final position in the forms. Do not exceed a free vertical drop of 3 feet from the point of discharge. Place concrete in one continuous operation from one end of the structure towards the other. Position grade stakes on 10 foot centers maximum in each direction when pouring interior slabs and on 20 foot centers maximum for exterior slabs.

3.8.1 General Placing Requirements

Deposit concrete continuously or in layers of such thickness that no concrete is placed on concrete which has hardened sufficiently to cause formation of seams or planes of weakness within the section. If a section cannot be placed continuously, provide construction joints as specified. Perform concrete placing at such a rate that concrete which is being integrated with fresh concrete is still plastic. Deposit concrete as nearly as practical in its final position to avoid segregation due to rehandling or flowing. Do not subject concrete to procedures which cause segregation.

Concrete to receive other construction must be screeded to proper level to avoid excessive skimming or grouting.

Do not use concrete which becomes nonplastic and unworkable or does not meet quality control limits as specified or has been contaminated by foreign materials. Use of retempered concrete is permitted. Remove rejected concrete from the site.

3.8.2 Footing Placement

Concrete for footings may be placed in excavations without forms upon inspection and approval by the Contracting Officer. Excavation width must be a minimum of 4 inches greater than indicated.

3.8.3 Vibration

ACI/MCP-2. Furnish a spare, working, vibrator on the job site whenever concrete is placed. Consolidate concrete slabs greater than 4 inches in depth with high frequency mechanical vibrating equipment supplemented by hand spading and tamping. Consolidate concrete slabs 4 inches or less in depth by wood tampers, spading, and settling with a heavy leveling straightedge. Operate internal vibrators with vibratory element submerged in the concrete, with a minimum frequency of not less than 6000 impulses per minute when submerged. Do not use vibrators to transport the concrete in the forms. Penetrate the previously placed lift with the vibrator when more than one lift is required. Use external vibrators on the exterior surface of the forms when internal vibrators do not provide adequate consolidation of the concrete.

3.8.4 Application of Epoxy Bonding Compound

Apply a thin coat of compound to dry, clean surfaces. Scrub compound into the surface with a stiff-bristle brush. Place concrete while compound is

stringy. Do not permit compound to harden prior to concrete placement. Follow manufacturer's instructions regarding safety and health precautions when working with epoxy resins.

3.8.5 Pumping

ACI/MCP-2. Pumping must not result in separation or loss of materials nor cause interruptions sufficient to permit loss of plasticity between successive increments. Loss of slump in pumping equipment must not exceed 2 inches. Do not convey concrete through pipe made of aluminum or aluminum alloy. Avoid rapid changes in pipe sizes. Limit maximum size of course aggregate to 33 percent of the diameter of the pipe. Limit maximum size of well rounded aggregate to 40 percent of the pipe diameter. Take samples for testing at both the point of delivery to the pump and at the discharge end.

3.8.6 Cold Weather

ACI/MCP-2. Do not allow concrete temperature to decrease below 50 degrees F. Obtain approval prior to placing concrete when the ambient temperature is below 40 degrees F or when concrete is likely to be subjected to freezing temperatures within 24 hours. Cover concrete and provide sufficient heat to maintain 50 degrees F minimum adjacent to both the formwork and the structure while curing. Limit the rate of cooling to 37 degrees F in any 1 hour and 50 degrees F per 24 hours after heat application.

3.8.7 Hot Weather

Maintain required concrete temperature using Figure 2.1.5 in ACI/MCP-2 to prevent the evaporation rate from exceeding 0.2 pound of water per square foot of exposed concrete per hour. Cool ingredients before mixing or use other suitable means to control concrete temperature and prevent rapid drying of newly placed concrete. Shade the fresh concrete as soon as possible after placing. Start curing when the surface of the fresh concrete is sufficiently hard to permit curing without damage. Provide water hoses, pipes, spraying equipment, and water hauling equipment, where job site is remote to water source, to maintain a moist concrete surface throughout the curing period. Provide burlap cover or other suitable, permeable material with fog spray or continuous wetting of the concrete when weather conditions prevent the use of either liquid membrane curing compound or impervious sheets. For vertical surfaces, protect forms from direct sunlight and add water to top of structure once concrete is set.

3.8.8 Follow-up

Check concrete within 24 hours of placement for flatness, levelness, and other specified tolerances. Adjust formwork and placement techniques on subsequent pours to achieve specified tolerances.

3.8.9 Placing Concrete in Forms

Deposit concrete placed in forms in horizontal layers not exceeding 24 inches.

Remove temporary spreaders in forms when concrete placing has reached elevation of spreaders.

Consolidate concrete placed in forms by mechanical vibrating equipment supplemented by hand spading, rodding, or tamping. Provide vibrating

equipment adequate in number of units and power of each unit to properly consolidate concrete. Do not use vibrators to transport concrete inside forms. Insert and withdraw vibrators vertically at uniformly spaced points not farther apart than visible effectiveness of machine. Do not insert vibrator into lower courses of concrete that have begun to set. At each insertion, limit duration of vibration to time necessary to consolidate concrete and complete embedment of reinforcement and other embedded items without causing segregation of concrete mix.

Do not start placing of concrete in supporting elements until concrete previously placed in columns and walls is no longer plastic and has been in place a minimum of 2 hours.

3.8.10 Placing Concrete Slabs

Place and consolidate concrete for slabs in a continuous operation, within the limits of approved construction joints until placing of panel or section is completed.

During concrete placing operations, consolidate concrete by mechanical vibrating equipment so that concrete is worked around reinforcement and other embedded items and into corners. Consolidate concrete placed in beams and girders of supported slabs and against bulkheads of slabs on ground by mechanical vibrators as specified. Consolidate concrete in remainder of slabs by vibrating bridge screeds, roller pipe screeds, or other approved method. Limit consolidation operations to time necessary to obtain consolidation of concrete without bringing an excess of fine aggregate to the surface. Concrete to be consolidated must be as dry as practical and surfaces thereof must not be manipulated prior to finishing operations. Bring concrete correct level with a straightedge and struck-off. Use bull floats or darbies to smooth surface, leaving it free of humps or hollows. Sprinkling of water on plastic surface is not permitted.

Provide finish of slabs as specified.

3.8.11 Bonding

Surfaces of set concrete at joints, except where bonding is obtained by use of concrete bonding agent, must be roughened and cleaned of laitance, coatings, loose particles, and foreign matter. Roughen surfaces in a manner that exposes the aggregate uniformly and does not leave laitance, loosened particles of aggregate, nor damaged concrete at the surface.

Obtain bonding of fresh concrete that has set as follows:

a. At joints between footings and walls or columns, between walls or columns and the beams or slabs they support, and elsewhere unless otherwise specified; roughened and cleaned surface of set concrete must be dampened, but not saturated, immediately prior to placing of fresh concrete.

b. At joints in exposed-to-view work; at vertical joints in walls; at joints near midpoint of span in girders, beams, supported slabs, other structural members; in work designed to contain liquids; the roughened and cleaned surface of set concrete must be dampened but not saturated and covered with a cement grout coating.

c. Provide cement grout that consists of equal parts of portland cement

and fine aggregate by weight with not more than 6 gallons of water per sack of cement. Apply cement grout with a stiff broom or brush to a minimum thickness of 1/16 inch. Deposit fresh concrete before cement grout has attained its initial set.

d. Bonding of fresh concrete to concrete that has set may be obtained by use of a concrete bonding agent. Apply such bonding material to cleaned concrete surface in accordance with approved printed instructions of bonding material manufacturer.

3.9 SURFACE FINISHES EXCEPT FLOOR, SLAB, AND PAVEMENT FINISHES

3.9.1 Defects

Repair formed surfaces by removing minor honeycombs, pits greater than 1 square inch surface area or 0.25 inch maximum depth, or otherwise defective areas. Provide edges perpendicular to the surface and patch with nonshrink grout. Patch tie holes and defects when the forms are removed. Concrete with extensive honeycomb including exposed steel reinforcement, cold joints, entrapped debris, separated aggregate, or other defects which affect the serviceability or structural strength will be rejected, unless correction of defects is approved. Obtain approval of corrective action prior to repair. The surface of the concrete must not vary more than the allowable tolerances of ACI/MCP-4. Exposed surfaces must be uniform in appearance and finished to a smooth form finish unless otherwise specified.

3.9.2 Not Against Forms (Top of Walls)

Surfaces not otherwise specified must be finished with wood floats to even surfaces. Finish must match adjacent finishes.

3.9.3 Formed Surfaces

3.9.3.1 Tolerances

ACI/MCP-1 and as indicated.

3.9.3.2 As-Cast Rough Form

Provide for surfaces not exposed to public view. Patch these holes and defects and level abrupt irregularities. Remove or rub off fins and other projections exceeding 0.25 inch in height.

3.9.3.3 Standard Smooth Finish

Finish must be as-cast concrete surface as obtained with form facing material for standard smooth finish. Repair and patch defective areas as specified; and all fins and remove other projections on surface.

3.10 FLOOR, SLAB, AND PAVEMENT FINISHES AND MISCELLANEOUS CONSTRUCTION

ACI/MCP-2, unless otherwise specified. Slope floors uniformly to drains where drains are provided. Depress the concrete base slab where quarry tile, ceramic tile, or floor mats are indicated. Steel trowel and fine-broom finish concrete slabs that are to receive quarry tile, ceramic tile, or paver tile. Where straightedge measurements are specified, Contractor must provide straightedge.

3.10.1 Finish

Place, consolidate, and immediately strike off concrete to obtain proper contour, grade, and elevation before bleedwater appears. Permit concrete to attain a set sufficient for floating and supporting the weight of the finisher and equipment. If bleedwater is present prior to floating the surface, drag the excess water off or remove by absorption with porous materials. Do not use dry cement to absorb bleedwater.

3.10.1.1 Scratched

Use for surfaces intended to receive bonded applied cementitious applications. After the concrete has been placed, consolidated, struck off, and leveled to a Class C tolerance as defined below,roughen the surface with stiff brushes of rakes before final set.

3.10.1.2 Floated

Use for exterior slabs where not otherwise specified. After the concrete has been placed, consolidated, struck off, and leveled, do not work the concrete further, until ready for floating. Whether floating with a wood, magnesium, or composite hand float, with a bladed power trowel equipped with float shoes, or with a powered disc, float must begin when the surface has stiffened sufficiently to permit the operation. During or after the first floating, check surface with a 10 foot straightedge applied at no less than two different angles, one of which is perpendicular to the direction of strike off. Cut down high spots and fill low spots during this procedure to produce a surface level within 1/4 inch in 10 feet.

3.10.1.3 Steel Troweled

Use for floors intended as walking surfaces and for reception of floor coverings. First, provide a floated finish. Next, the finish must be power troweled two times, and finally hand troweled. The first troweling after floating needs to produce a smooth surface which is relatively free of defects but which may still show some trowel marks. Perform additional trowelings done by hand after the surface has hardened sufficiently. The final troweling is done when a ringing sound is produced as the trowel is moved over the surface. Thoroughly consolidate the surface by the hand troweling operations. The finished surface must be essentially free of trowel marks and uniform in texture and appearance. The finished surface must produce a surface level to within 1/4 inch in 10 feet. On surfaces intended to support floor coverings, remove any defects of sufficient magnitude to show through the floor covering by grinding.

3.10.1.4 Broomed

Use on surfaces of exterior walks, platforms, patios, and ramps, unless otherwise indicated. Perform a floated finish, then draw a broom or burlap belt across the surface to produce a coarse scored texture. Permit surface to harden sufficiently to retain the scoring or ridges. Broom transverse to traffic or at right angles to the slope of the slab.

3.10.1.5 Pavement

Screed the concrete with a template advanced with a combined longitudinal and crosswise motion. Maintain a slight surplus of concrete ahead of the template. After screeding, float the concrete longitudinally. Use a straightedge to check slope and flatness; correct and refloat as

necessary. Obtain final finish by a burlap drag. Drag a strip of clean, wet burlap from 3 to 10 feet wide and 2 feet longer than the pavement width across the slab. Produce a fine, granular, sandy textured surface without disfiguring marks. Round edges and joints with an edger having a radius of 1/8 inch.

3.10.1.6 Chemical-Hardener Treatment

Apply liquid-chemical floor hardener where indicated after curing and drying concrete surface. Dilute liquid hardener with water and apply in three coats. First coat must be one-third strength, second coat one-half strength, and third coat two-thirds strength. Apply each coat evenly and allow to dry 24 hours between coats.

Approved proprietary chemical hardeners must be applied in accordance with manufacturer's printed directions.

3.10.2 Concrete Walks

Provide 4 inches thick minimum. Provide contraction joints spaced every 5 linear feet unless otherwise indicated. Cut contraction joints one inch deep with a jointing tool after the surface has been finished. Provide 0.5 inch thick transverse expansion joints at changes in direction where sidewalk abuts curb, steps, rigid pavement, or other similar structures; space expansion joints every 50 feet maximum. Give walks a broomed finish. Unless indicated otherwise, provide a transverse slope of 1/48. Limit variation in cross section to 1/4 inch in 5 feet.

3.10.3 Pits and Trenches

Place bottoms and walls monolithically or provide waterstops and keys.

3.10.4 Curbs and Gutters

Provide contraction joints spaced every 10 feet maximum unless otherwise indicated. Cut contraction joints 3/4 inch deep with a jointing tool after the surface has been finished. Provide expansion joints 1/2 inch thick and spaced every 100 feet maximum unless otherwise indicated. Perform pavement finish.

3.10.5 Splash Blocks

Provide at outlets of downspouts emptying at grade. Splash blocks may be precast concrete, and must be 24 inches long, 12 inches wide and 4 inches thick, unless otherwise indicated, with smooth-finished countersunk dishes sloped to drain away from the building.

3.11 CURING AND PROTECTION

ACI/MCP-2 unless otherwise specified. Begin curing immediately following form removal. Avoid damage to concrete from vibration created by blasting, pile driving, movement of equipment in the vicinity, disturbance of formwork or protruding reinforcement, and any other activity resulting in ground vibrations. Protect concrete from injurious action by sun, rain, flowing water, frost, mechanical injury, tire marks, and oil stains. Do not allow concrete to dry out from time of placement until the expiration of the specified curing period. Do not use membrane-forming compound on surfaces where appearance would be objectionable, on any surface to be painted, where coverings are to be bonded to the concrete, or on concrete

to which other concrete is to be bonded. If forms are removed prior to the expiration of the curing period, provide another curing procedure specified herein for the remaining portion of the curing period. Provide moist curing for those areas receiving liquid chemical sealer-hardener or epoxy coating. Allow curing compound/sealer installations to cure prior to the installation of materials that adsorb VOCs.

3.11.1 General

Protect freshly placed concrete from premature drying and cold or hot temperature and maintain without drying at a relatively constant temperature for the period of time necessary for hydration of cement and proper hardening of concrete.

Start initial curing as soon as free water has disappeared from surface of concrete after placing and finishing. Keep concrete moist for minimum 72 hours.

Final curing must immediately follow initial curing and before concrete has dried. Continue final curing until cumulative number of hours or fraction thereof (not necessarily consecutive) during which temperature of air in contact with the concrete is above 50 degrees F has totaled 168 hours. Alternatively, if tests are made of cylinders kept adjacent to the structure and cured by the same methods, final curing may be terminated when the average compressive strength has reached 70 percent of the 28-day design compressive strength. Prevent rapid drying at end of final curing period.

3.11.2 Moist Curing

Remove water without erosion or damage to the structure. Prevent water run-off.

3.11.2.1 Ponding or Immersion

Continually immerse the concrete throughout the curing period. Water must not be more than 50 degrees F less than the temperature of the concrete. For temperatures between 40 and 50 degrees F, increase the curing period by 50 percent.

3.11.2.2 Fog Spraying or Sprinkling

Apply water uniformly and continuously throughout the curing period. For temperatures between 40 and 50 degrees F, increase the curing period by 50 percent.

3.11.2.3 Pervious Sheeting

Completely cover surface and edges of the concrete with two thicknesses of wet sheeting. Overlap sheeting 6 inches over adjacent sheeting. Provide sheeting that is at least as long as the width of the surface to be cured. During application, do not drag the sheeting over the finished concrete nor over sheeting already placed. Wet sheeting thoroughly and keep continuously wet throughout the curing period.

3.11.2.4 Impervious Sheeting

Wet the entire exposed surface of the concrete thoroughly with a fine spray of water and cover with impervious sheeting throughout the curing period.

Lay sheeting directly on the concrete surface and overlap edges 12 inches minimum. Provide sheeting not less than 18 inches wider than the concrete surface to be cured. Secure edges and transverse laps to form closed joints. Repair torn or damaged sheeting or provide new sheeting. Cover or wrap columns, walls, and other vertical structural elements from the top down with impervious sheeting; overlap and continuously tape sheeting joints; and introduce sufficient water to soak the entire surface prior to completely enclosing.

3.11.3 Liquid Membrane-Forming Curing Compound

Seal or cover joint openings prior to application of curing compound. Prevent curing compound from entering the joint. Apply in accordance with the recommendations of the manufacturer immediately after any water sheen which may develop after finishing has disappeared from the concrete surface. Provide and maintain compound on the concrete surface throughout the curing period. Do not use this method of curing where the use of Figure 2.1.5 in ACI/MCP-2 indicates that hot weather conditions cause an evaporation rate exceeding 0.2 pound of water per square foot per hour.

3.11.3.1 Application

Unless the manufacturer recommends otherwise, apply compound immediately after the surface loses its water sheen and has a dull appearance, and before joints are sawed. Mechanically agitate curing compound thoroughly during use. Use approved power-spraying equipment to uniformly apply two coats of compound in a continuous operation. The total coverage for the two coats must be 200 square feet maximum per gallon of undiluted compound unless otherwise recommended by the manufacturer's written instructions. The compound must form a uniform, continuous, coherent film that does not check, crack, or peel. Immediately apply an additional coat of compound to areas where the film is defective. Re-spray concrete surfaces subjected to rainfall within 3 hours after the curing compound application.

3.11.3.2 Protection of Treated Surfaces

Prohibit pedestrian and vehicular traffic and other sources of abrasion at least 72 hours after compound application. Maintain continuity of the coating for the entire curing period and immediately repair any damage.

3.11.4 Liquid Chemical Sealer-Hardener

Apply sealer-hardener to interior floors not receiving floor covering and floors located under access flooring. Apply the sealer-hardener in accordance with manufacturer's recommendations. Seal or cover joints and openings in which joint sealant is to be applied as required by the joint sealant manufacturer. Do not apply the sealer hardener until the concrete has been moist cured and has aged for a minimum of 30 days. Apply a minimum of two coats of sealer-hardener.

Apply sealer-hardener to the following areas:

a. Interior floors not receiving floor covering.

b. All exterior equipment slabs.

c. Fuel containment pads.

d. Drive slabs.

e. Exposed surfaces of tank ringwalls.

f. Interior surface of dike walls.

g. Interior surfaces of pits and vaults, unless noted to be coated otherwise.

3.11.5 Curing Periods

ACI/MCP-2 except 10 days for retaining walls, pavement or chimneys, 21 days for concrete that is in full-time or intermittent contact with seawater, salt spray, alkali soil or waters. Begin curing immediately after placement. Protect concrete from premature drying, excessively hot temperatures, and mechanical injury; and maintain minimal moisture loss at a relatively constant temperature for the period necessary for hydration of the cement and hardening of the concrete. The materials and methods of curing are subject to approval by the Contracting Officer.

3.11.6 Curing Methods

Accomplish curing by moist curing, by moisture-retaining cover curing, by membrane curing, and by combinations thereof, as specified.

a. Moist curing:

1. Accomplish moisture curing by any of the following methods:

(a) Keeping surface of concrete wet by covering with water

(b) Continuous water spraying

(c) Covering concrete surface with specified absorptive cover for curing concrete saturated with water and keeping absorptive cover wet by water spraying or intermittent hosing. Place absorptive cover to provide coverage of concrete surfaces and edges with a slight overlap over adjacent absorptive covers.

b. Moisture-cover curing:

1. Accomplish moisture-retaining cover curing by covering concrete surfaces with specified moisture-retaining cover for curing concrete. Place cover directly on concrete in widest practical width, with sides and ends lapped at least 3 inches. Weight cover to prevent displacement; immediately repair tears or holes appearing during curing period by patching with pressure-sensitive, waterproof tape or other approved method.

c. Membrane curing:

1. Accomplish membrane curing by applying specified membrane-forming curing compound to damp concrete surfaces as soon as moisture film has disappeared. Apply curing compound uniformly in a two-coat operation by power-spraying equipment using a spray nozzle equipped with a wind guard. Apply second coat in a direction at right angles to direction of first coat. Total coverage for two coats must be not more than 200 square feet per gallon of curing compound. Respray concrete surfaces which are subjected to heavy rainfall within 3 hours after curing compound has been applied by

method and at rate specified. Maintain continuity of coating for entire curing period and immediately repair damage to coating during this period.

2. Membrane-curing compounds must not be used on surfaces that are to be covered with coating material applied directly to concrete or with a covering material bonded to concrete, such as other concrete, liquid floor hardener, waterproofing, dampproofing, membrane roofing, painting, and other coatings and finish materials.

3.11.7 Curing Formed Surfaces

Accomplish curing of formed surfaces, including undersurfaces of girders, beams, supported slabs, and other similar surfaces by moist curing with forms in place for full curing period or until forms are removed. If forms are removed before end of curing period, accomplish final curing of formed surfaces by any of the curing methods specified above, as applicable.

3.11.8 Curing Unformed Surfaces

Accomplish initial curing of unformed surfaces, such as monolithic slabs, floor topping, and other flat surfaces, by membrane curing.

Unless otherwise specified, accomplish final curing of unformed surfaces by any of curing methods specified above, as applicable.

Accomplish final curing of concrete surfaces to receive liquid floor hardener of finish flooring by moisture-retaining cover curing.

3.11.9 Temperature of Concrete During Curing

When temperature of atmosphere is 41 degrees F and below, maintain temperature of concrete at not less than 55 degrees F throughout concrete curing period or 45 degrees F when the curing period is measured by maturity. When necessary, make arrangements before start of concrete placing for heating, covering, insulation, or housing as required to maintain specified temperature and moisture conditions for concrete during curing period.

When the temperature of atmosphere is 80 degrees F and above or during other climatic conditions which cause too rapid drying of concrete, make arrangements before start of concrete placing for installation of wind breaks, of shading, and for fog spraying, wet sprinkling, or moisture-retaining covering of light color as required to protect concrete during curing period.

Changes in temperature of concrete must be uniform and not exceed 37 degrees F in any 1 hour nor 80 degrees F in any 24-hour period.

3.11.10 Protection from Mechanical Injury

During curing period, protect concrete from damaging mechanical disturbances, particularly load stresses, heavy shock, and excessive vibration and from damage caused by rain or running water.

3.11.11 Protection After Curing

Protect finished concrete surfaces from damage by construction operations.

3.12 FIELD QUALITY CONTROL

3.12.1 Sampling

ASTM C172/C172M. Collect samples of fresh concrete to perform tests specified. ASTM C31/C31M for making test specimens.

3.12.2 Testing

3.12.2.1 Slump Tests

ASTM C143/C143M. Take concrete samples during concrete placement. The maximum slump may be increased as specified with the addition of an approved admixture provided that the water-cement ratio is not exceeded. Perform tests at commencement of concrete placement, when test cylinders are made, and for each batch (minimum) or every 20 cubic yards (maximum) of concrete.

3.12.2.2 Temperature Tests

Test the concrete delivered and the concrete in the forms. Perform tests in hot or cold weather conditions (below 50 degrees F and above 80 degrees F) for each batch (minimum) or every 20 cubic yards (maximum) of concrete, until the specified temperature is obtained, and whenever test cylinders and slump tests are made.

3.12.2.3 Compressive Strength Tests

ASTM C39/C39M. Make five test cylinders for each set of tests in accordance with ASTM C31/C31M. Take precautions to prevent evaporation and loss of water from the specimen. Test two cylinders at 7 days, two cylinders at 28 days, and hold one cylinder in reserve. Take samples for strength tests of each mix design of concrete placed each day not less than once a day, nor less than once for each 100 cubic yards of concrete, nor less than once for each 5400 square feet of surface area for slabs or walls. For the entire project, take no less than five sets of samples and perform strength tests for each mix design of concrete placed. Each strength test result must be the average of two cylinders from the same concrete sample tested at 28 days. If the average of any three consecutive strength test results is less than f'c or if any strength test result falls below f'c by more than 450 psi, take a minimum of three ASTM C42/C42M core samples from the in-place work represented by the low test cylinder results and test. Concrete represented by core test is considered structurally adequate if the average of three cores is equal to at least 85 percent of f'c and if no single core is less than 75 percent of f'c. Retest locations represented by erratic core strengths. Remove concrete not meeting strength criteria and provide new acceptable concrete. Repair core holes with nonshrink grout. Match color and finish of adjacent concrete.

3.12.2.4 Air Content

ASTM C173/C173M for normal weight concrete. Test air-entrained concrete for air content at the same frequency as specified for slump tests.

3.12.2.5 Unit Weight of Structural Lightweight Concrete

ASTM C567/C567M. Determine unit weight of lightweight concrete. Perform test for every 20 cubic yards maximum.

3.12.2.6 Ion Concentration

ACI 318. Determine water soluble ion concentration in accordance with ASTM C1218/C1218M. Perform test once for each mix design.

3.12.2.7 Strength of Concrete Structure

Compliance with the following is considered deficient if it fails to meet the requirements which control strength of structure in place, including following conditions:

a. Failure to meet compressive strength tests as evaluated

b. Reinforcement not conforming to requirements specified

c. Concrete which differs from required dimensions or location in such a manner as to reduce strength

d. Concrete curing and protection of concrete against extremes of temperature during curing, not conforming to requirements specified

e. Concrete subjected to damaging mechanical disturbances, particularly load stresses, heavy shock, and excessive vibration

f. Poor workmanship likely to result in deficient strength

Where the strength of the concrete structure is considered deficient submit a mitigation or remediation plan for review and approval by the contracting officer.

3.12.2.8 Non-Conforming Materials

Factors that indicate that there are non-conforming materials include (but not limited to) excessive compressive strength, inadequate compressive strength, excessive slump, excessive voids and honeycombing, concrete delivery records that indicate excessive time between mixing and placement, or excessive water was added to the mixture during delivery and placement. Any of these indicators alone are sufficient reason for the Contracting Officer to request additional sampling and testing.

Investigations into non-conforming materials must be conducted at the Contractor's expense. The Contractor must be responsible for the investigation and must make written recommendations to adequately mitigate or remediate the non-conforming material. The Contracting Officer may accept, accept with reduced payment, require mitigation, or require removal and replacement of non-conforming material at no additional cost to the Government.

3.12.2.9 Testing Concrete Structure for Strength

When there is evidence that strength of concrete structure in place does not meet specification requirements, make cores drilled from hardened concrete for compressive strength determination in accordance with ASTM C42/C42M, and as follows:

a. Take at least three representative cores from each member or area of concrete-in-place that is considered potentially deficient. Location of cores will be determined by the Contracting Officer.

b. Test cores after moisture conditioning in accordance with ASTM C42/C42M if concrete they represent is more than superficially wet under service.

c. Air dry cores, (60 to 80 degrees F with relative humidity less than 60 percent) for 7 days before test and test dry if concrete they represent is dry under service conditions.

d. Strength of cores from each member or area are considered satisfactory if their average is equal to or greater than 85 percent of the 28-day design compressive strength of the class of concrete.

e. Core specimens will be taken and tested by the Government. If the results of core-boring tests indicate that the concrete as placed does not conform to the drawings and specification, the cost of such tests and restoration required must be borne by the Contractor.

Fill core holes solid with patching mortar and finished to match adjacent concrete surfaces.

Correct concrete work that is found inadequate by core tests in a manner approved by the Contracting Officer.

3.13 WASTE MANAGEMENT

As specified in the Waste Management Plan and as follows.

3.13.1 Mixing Equipment

Before concrete pours, designate Company-owned site meeting environmental standards for cleaning out concrete mixing trucks. Minimize water used to wash equipment.

3.13.2 Hardened, Cured Waste Concrete

Use hardened, cured waste concrete as aggregate in concrete mix if approved by Contracting Officer.

3.13.3 Reinforcing Steel

Collect reinforcing steel and place in designated area for recycling.

3.13.4 Other Waste

Identify concrete manufacturer's or supplier's policy for collection or return of construction waste, unused material, deconstruction waste, and/or packaging material.

3.14 JOINTS

3.14.1 Construction Joints

Make and locate joints not indicated so as not to impair strength and appearance of the structure, as approved. Locate construction joints as follows:

a. In walls at not more than 60 feet in any horizontal direction; at top of footing; at top of slabs on ground; at top and bottom of door and window openings or where required to conform to architectural details;

and at underside of deepest beam or girder framing into wall

b. In columns or piers, at top of footing; at top of slabs on ground; and at underside of deepest beam or girder framing into column or pier

c. Near midpoint of spans for supported slabs, beams, and girders unless a beam intersects a girder at the center, in which case construction joints in girder must offset a distance equal to twice the width of the beam. Make transfer of shear through construction joint by use of inclined reinforcement.

d. In slabs on ground, so as to divide slab into areas not in excess of 1,200 square feet

Provide keyways at least 1-1/2-inches deep in construction joints in walls and slabs and between walls and footings; approved bulkheads may be used for slabs.

Joints must be perpendicular to main reinforcement. Reinforcement must be continued across construction joints.

3.14.2 Waterstops

Provide waterstops in construction joints as indicated.

Install waterstops to form a continuous diaphragm in each joint. Make adequate provisions to support and protect waterstops during progress of work. Make field joints in waterstops in accordance with waterstop manufacturer's printed instructions, as approved. Protect waterstops protruding from joints from damage.

3.14.3 Isolation Joints in Slabs on Ground

Provide joints at points of contact between slabs on ground and vertical surfaces, such as column pedestals, foundation walls, grade beams, and elsewhere as indicated.

Fill joints with premolded joint filler strips 1/2 inch thick, extending full slab depth. Install filler strips at proper level below finish floor elevation with a slightly tapered, dress-and-oiled wood strip temporarily secured to top of filler strip to form a groove not less than 3/4 inch in depth where joint is sealed with sealing compound and not less than 1/4 inch in depth where joint sealing is not required. Remove wood strip after concrete has set. Contractor must clean groove of foreign matter and loose particles after surface has dried.

3.14.4 Control Joints in Slabs on Ground

Provide joints to form panels as indicated.

Joints must be 1/8-inch wide by 1/5 to 1/4 of slab depth and formed by cutting the concrete with a saw after the concrete has set. After concrete has cured for at least 7 days, the Contractor must clean groove of foreign matter and loose particles.

3.14.5 Sealing Joints in Slabs on Ground

Isolation and control joints which are to receive finish flooring material must be sealed with joint sealing compound after concrete curing period.

Slightly underfill groove with joint sealing compound to prevent extrusion of compound. Remove excess material as soon after sealing as possible.

Sealing is not required for isolation and control joints to be covered with finish flooring material. Groove must be left ready to receive filling material that is provided as part of finish floor covering work.

3.15 INSTALLATION OF ANCHORAGE DEVICES

3.15.1 General

Anchorage devices and embedded items required for other work that is attached to, or supported by, set and build in cast-in-place concrete as part of the work of this section, using setting drawings, instructions, and directions for work to be attached thereto.

3.15.2 Placing Anchorage Devices

Anchorage devices and embedded items must be positioned accurately and supported against displacement. Fill openings in anchorage devices such as slots and threaded holes with an approved, removable material to prevent entry of concrete into openings.

3.16 CONCRETE CONVEYING

3.16.1 Transfer of Concrete At Project Site

Handle concrete from point of delivery and transfer to concrete conveying equipment and to locations of final deposit as rapidly as practical by methods which prevent segregation and loss of concrete mix materials.

3.16.2 Mechanical Equipment for Conveying Concrete

Equipment must ensure a continuous flow of concrete at delivery end, as approved. Provide runways for wheeled concrete-conveying equipment from concrete delivery point to locations of final deposit. Interior surfaces of concrete conveying equipment must be free of hardened concrete, debris, water, snow, ice, and other deleterious substances.

-- End of Section --

SECTION 03 52 17

CAST-IN-PLACE LOW-DENSITY CELLULAR CONCRETE
04/08

PART 1 GENERAL

1.1 REFERENCES

The publications listed below form a part of this specification to the extent referenced. The publications are referred to within the text by the basic designation only.

ASTM INTERNATIONAL (ASTM)

ASTM C150/C150M	(2012) Standard Specification for Portland Cement
ASTM C260/C260M	(2010a) Standard Specification for Air-Entraining Admixtures for Concrete
ASTM C495/C495M	(2012) Standard Test Method for Compressive Strength of Lightweight Insulating Concrete
ASTM C595/C595M	(2013) Standard Specification for Blended Hydraulic Cements
ASTM C796/C796M	(2012) Standard Test Method for Foaming Agents for Use in Producing Cellular Concrete Using Preformed Foam
ASTM C869/C869M	(2011) Foaming Agents Used in Making Preformed Foam for Cellular Concrete

1.2 SYSTEM DESCRIPTION

Provide the services of a firm experienced in the installation of cast-in-place low density cellular concrete. A representative of the firm shall supervise the mixing, transporting, placing, finishing, and testing of the low density concrete.

1.2.1 Concrete

Establish the strength qualities of the low density concrete proposed for use from manufacturer's submitted data prior to the beginning of construction operations. Perform the preparation of the design mix and subsequent testing through an approved testing laboratory capable of performing such services or, if approved, by the manufacturer of the low density concrete. Prepare trial design batches with the same materials proposed for use in the work. Make and test Test Cylinders in accordance with ASTM C796/C796M for cellular concrete. Proportion low density concrete for a maximum oven-dry unit weight of 50 pcf and the minimum average compressive strengths at 28 days of 450 psi. Submit certified copies of the design mix report for low density concrete indicating mixture proportions, average compressive strength in psi, and wet unit weight at point of placement for the type proposed for the project. Make allowances

for any unit weight changes resulting from handling and placing methods.

1.2.2 Locations

Provide low-density cellular concrete for use as fill material under pipe support footings along the west side of the project site.

1.3 SUBMITTALS

Government approval is required for submittals with a "G" designation; submittals not having a "G" designation are for Contractor Quality Control approval. Submit the following in accordance with Section 01 33 00 SUBMITTAL PROCEDURES:

SD-02 Shop Drawings

Low Density Cellular Concrete; G

SD-06 Test Reports

Design Mix; G

SD-05 Design Data

Low Density Cellular Concrete; G

PART 2 PRODUCTS

2.1 MATERIALS

2.1.1 Admixtures

Provide air-entraining admixtures conforming to ASTM C260/C260M. Do not use admixtures containing chloride ions.

2.1.2 Water

Potable, free of deleterious amounts of alkali, acid and organic materials which would adversely affect the setting or strength of the cellular concrete.

2.1.3 Foaming Agent

Provide foaming agents, for making cellular concrete, conforming to ASTM C869/C869M.

2.1.4 Cementitious Material

Provide portland cement conforming to ASTM C150/C150M, Type I/II or Type II; or ASTM C595/C595M, Type IS.

2.2 MIXING PROCEDURE

Mechanically mix concrete ingredients to produce low density concrete of uniform consistency and a wet unit weight at point of placement required to obtain the compressive strength specified. Mixing and transporting operation shall be in accordance with the low density concrete material manufacturer's recommendation.

PART 3 EXECUTION

3.1 LOW DENSITY CONCRETE CONVEYING AND PLACEMENT

Conveying of low density concrete from the mixer to place of deposit shall be by methods that will prevent segregation and loss of material. Equipment for conveying concrete shall be of such size and design to ensure uniform, continuous placement of concrete. Deposit and screed low density concrete in a continuous operation until the placing of a panel or section is completed. Do not use rodding, tamping, vibrating, or steel troweling. Place low density concrete in lifts not to the exceed 3'-0" in depth, unless otherwise approved by the firm representative. The final surface shall be within plus or minus 0.1 feet of the plan elevation. Backfill shall not be permitted until low density concrete has attained a compressive strength of at least 20 psi.

3.2 COLD WEATHER PLACEMENT

Reinforcement, forms, fillers, and other materials that will come in contact with the low density mixture shall be free of frost, snow, or ice. Do not place low density concrete at temperatures below 40 degrees F or when temperatures are predicted to fall below 40 degrees F during placement, unless precautions recommended by the manufacturer are employed and such placement is approved.

3.3 CURING

Cure low density concrete in accordance with the manufacturer's recommendation. Curing operations shall commence at initial set of the concrete.

3.4 FIELD-CONTROL TESTS

Field-control tests shall be performed by an approved commercial testing laboratory and consist of wet-density at time of placement and compressive strength tests. If the specimens tested fail to meet the compressive-strength requirements, remove and replace the portion represented by the specimens.

3.4.1 Wet-Density Tests

Wet-density tests shall be made as required, but shall be not less than twice during each day's pour. Samples for wet-density tests shall be taken at the point of placement. A variation in excess of 5 percent under the laboratory-established design of wet density, after discharge at point of placement, shall require a modification of mix proportions or changes in mixing procedure, or both. Wet-density at point of placement shall be determined by calculating the density of samples using a container of known volume and empty weight, per applicable sections of ASTM C796/C796M.

3.4.2 Compressive Strength Tests

The preparation of cylinders and testing shall be in accordance with ASTM C495/C495M, or ASTM C796/C796M as applicable, except that samples shall be obtained at the point of placement. Take samples at least once a day and for each 75 cubic yards of low density concrete placed. One sample shall be sufficient to make at least four cylinders. Moisture cure specimens for a period up to 7 days prior to a 28-day compressive strength test. Provide 14 day and 28 day test results.

3.5 CLEANING AND PROTECTION

Protect the finished surface from damage by weather and construction operations prior to installation of covering material.

-- End of Section --

SECTION 05 12 00

STRUCTURAL STEEL
05/14

PART 1 GENERAL

1.1 REFERENCES

The publications listed below form a part of this specification to the extent referenced. The publications are referred to within the text by the basic designation only.

AMERICAN INSTITUTE OF STEEL CONSTRUCTION (AISC)

AISC 201	(2006) AISC Certification Program for Structural Steel Fabricators
AISC 303	(2010) Code of Standard Practice for Steel Buildings and Bridges
AISC 325	(2011) Steel Construction Manual
AISC 326	(2009) Detailing for Steel Construction
AISC 341	(2010) Seismic Provisions for Structural Steel Buildings
AISC 360	(2010) Specification for Structural Steel Buildings
AISC DESIGN GUIDE 10	(1997) Erection Bracing of Low-Rise Structural Steel Buildings

AMERICAN WELDING SOCIETY (AWS)

AWS A2.4	(2012) Standard Symbols for Welding, Brazing and Nondestructive Examination
AWS D1.1/D1.1M	(2010; Errata 2011) Structural Welding Code - Steel
AWS D1.8/D1.8M	(2009) Structural Welding Code—Seismic Supplement

ASME INTERNATIONAL (ASME)

ASME B46.1	(2009) Surface Texture, Surface Roughness, Waviness and Lay

ASTM INTERNATIONAL (ASTM)

ASTM A123/A123M	(2013) Standard Specification for Zinc (Hot-Dip Galvanized) Coatings on Iron and Steel Products
ASTM A143/A143M	(2007) Standard Practice for Safeguarding Against Embrittlement of Hot-Dip

	Galvanized Structural Steel Products and Procedure for Detecting Embrittlement
ASTM A153/A153M	(2009) Standard Specification for Zinc Coating (Hot-Dip) on Iron and Steel Hardware
ASTM A29/A29M	(2013) Standard Specification for General Requirements for Steel Bars, Carbon and Alloy, Hot-Wrought
ASTM A307	(2012) Standard Specification for Carbon Steel Bolts and Studs, 60 000 PSI Tensile Strength
ASTM A325	(2010; E 2013) Standard Specification for Structural Bolts, Steel, Heat Treated, 120/105 ksi Minimum Tensile Strength
ASTM A36/A36M	(2012) Standard Specification for Carbon Structural Steel
ASTM A490	(2012) Standard Specification for Structural Bolts, Alloy Steel, Heat Treated, 150 ksi Minimum Tensile Strength
ASTM A500/A500M	(2013) Standard Specification for Cold-Formed Welded and Seamless Carbon Steel Structural Tubing in Rounds and Shapes
ASTM A53/A53M	(2012) Standard Specification for Pipe, Steel, Black and Hot-Dipped, Zinc-Coated, Welded and Seamless
ASTM A563	(2007a) Standard Specification for Carbon and Alloy Steel Nuts
ASTM A563M	(2007; R 2013) Standard Specification for Carbon and Alloy Steel Nuts (Metric)
ASTM A6/A6M	(2013a) Standard Specification for General Requirements for Rolled Structural Steel Bars, Plates, Shapes, and Sheet Piling
ASTM A780/A780M	(2009) Standard Practice for Repair of Damaged and Uncoated Areas of Hot-Dip Galvanized Coatings
ASTM A992/A992M	(2011) Standard Specification for Structural Steel Shapes
ASTM C1107/C1107M	(2013) Standard Specification for Packaged Dry, Hydraulic-Cement Grout (Nonshrink)
ASTM C827/C827M	(2010) Change in Height at Early Ages of Cylindrical Specimens from Cementitious Mixtures

ASTM F1554	(2007a; E 2011) Standard Specification for Anchor Bolts, Steel, 36, 55, and 105-ksi Yield Strength
ASTM F1852	(2011) Standard Specification for "Twist Off" Type Tension Control Structural Bolt/Nut/Washer Assemblies, Steel, Heat Treated, 120/105 ksi Minimum Tensile Strength
ASTM F2329	(2013) Zinc Coating, Hot-Dip, Requirements for Application to Carbon and Alloy Steel Bolts, Screws, Washers, Nuts, and Special Threaded Fasteners
ASTM F436	(2011) Hardened Steel Washers
ASTM F844	(2007a; R 2013) Washers, Steel, Plain (Flat), Unhardened for General Use

THE SOCIETY FOR PROTECTIVE COATINGS (SSPC)

SSPC PA 1	(2000; E 2004) Shop, Field, and Maintenance Painting of Steel
SSPC Paint 20	(2002; E 2004) Zinc-Rich Primers (Type I, Inorganic, and Type II, Organic)
SSPC Paint 29	(2002; E 2004) Zinc Dust Sacrificial Primer, Performance-Based
SSPC SP 3	(1982; E 2004) Power Tool Cleaning
SSPC SP 6/NACE No.3	(2007) Commercial Blast Cleaning

U.S. DEPARTMENT OF DEFENSE (DOD)

UFC 3-301-01	(2013) Structural Engineering
UFC 3-310-04	(2013) Seismic Design for Buildings

1.2 SUBMITTALS

Government approval is required for submittals with a "G" designation; submittals not having a "G" designation are for Contractor Quality Control approval. Submit the following in accordance with Section 01 33 00 SUBMITTAL PROCEDURES:

SD-01 Preconstruction Submittals

Erection Drawings; G

SD-02 Shop Drawings

Fabrication drawings including description of connections; G

SD-03 Product Data

Shop primer; G

Welding electrodes and rods; G

Non-Shrink Grout; G

Tension control bolts; G

SD-06 Test Reports

Class B coating

Bolts, nuts, and washers

Weld Inspection Reports

Bolt Testing Reports

Embrittlement Test Reports

SD-07 Certificates

Steel

Bolts, nuts, and washers

Galvanizing

AISC Fabrication Plant Quality Certification

Welding procedures and qualifications

Welding electrodes and rods

1.3 AISC QUALITY CERTIFICATION

Work must be fabricated in an AISC Certified Fabrication Plant, Category Std. Submit AISC fabrication plant quality certification.

1.4 SEISMIC PROVISIONS

The structural steel system must be provided in accordance with AISC 341, Chapter J as amended by UFC 3-310-04.

1.5 QUALITY ASSURANCE

1.5.1 Preconstruction Submittals

1.5.1.1 Erection Drawings

Submit for record purposes. Indicate the sequence of erection, temporary shoring and bracing. The erection drawings must conform to AISC 303.

1.5.2 Fabrication Drawing Requirements

Submit fabrication drawings for approval prior to fabrication. Prepare in accordance with AISC 326 and AISC 325. Fabrication drawings must not be reproductions of contract drawings. Include complete information for the fabrication and erection of the structure's components, including the location, type, and size of bolts, welds, member sizes and lengths,

connection details, blocks, copes, and cuts. Use AWS A2.4 standard welding symbols. Any deviations from the details shown on the contract drawings must be clearly highlighted on the fabrication drawings. Explain the reasons for any deviations from the contract drawings.

1.5.3 Certifications

1.5.3.1 Welding Procedures and Qualifications

Prior to welding, submit certification for each welder stating the type of welding and positions qualified for, the code and procedure qualified under, date qualified, and the firm and individual certifying the qualification tests. If the qualification date of the welding operator is more than one-year old, the welding operator's qualification certificate must be accompanied by a current certificate by the welder attesting to the fact that he has been engaged in welding since the date of certification, with no break in welding service greater than 6 months.

Conform to all requirements specified in AWS D1.1/D1.1M and AWS D1.8/D1.8M.

PART 2 PRODUCTS

2.1 SYSTEM DESCRIPTION

Provide the structural steel system, including shop primer and galvanizing, complete and ready for use. Structural steel systems including design, materials, installation, workmanship, fabrication, assembly, erection, inspection, quality control, and testing must be provided in accordance with AISC 360, AISC 341, UFC 3-301-01 and UFC 3-310-04 except as modified in this contract.

2.2 STEEL

2.2.1 Structural Steel

Wide flange and WT shapes, ASTM A992/A992M. Angles, Channels and Plates, ASTM A36/A36M.

2.2.2 Structural Steel Tubing

ASTM A500/A500M, Grade B.

2.2.3 Steel Pipe

ASTM A53/A53M, Type E or S, Grade B, weight class STD (Standard).

2.3 BOLTS, NUTS, AND WASHERS

Submit the certified manufacturer's mill reports which clearly show the applicable ASTM mechanical and chemical requirements together with the actual test results for the supplied fasteners.

2.3.1 Common Grade Bolts

2.3.1.1 Bolts

ASTM A307, Grade A. The bolt heads and the nuts of the supplied fasteners must be marked with the manufacturer's identification mark, the strength grade and type specified by ASTM specifications.

2.3.1.2 Nuts

ASTM A563M, Grade A, heavy hex style.

2.3.1.3 Washers

ASTM F844.

2.3.2 High-Strength Bolts

2.3.2.1 Bolts

ASTM A325, Type 1.

2.3.2.2 Nuts

ASTM A563, Grade and Style as specified in the applicable ASTM bolt standard.

2.3.2.3 Washers

ASTM F436, plain carbon steel.

2.3.3 Tension Control Bolts

ASTM F1852, Type 1, heavy-hex head assemblies consisting of steel structural bolts with splined ends, heavy-hex carbon steel nuts, and hardened carbon steel washers. Assembly finish must be plain.

2.3.4 Foundation Anchorage

2.3.4.1 Anchor Rods

ASTM F1554 Gr 36 55, Class 1A. Unless indicated otherwise, galvanize in accordance with ASTM A153/A153M.

2.3.4.2 Anchor Nuts

ASTM A563, Grade A, hex style. Unless indicated otherwise, galvanize in accordance with ASTM A153/A153M.

2.3.4.3 Anchor Washers

ASTM F844. Unless indicated otherwise, galvanize in accordance with ASTM A153/A153M.

2.3.4.4 Anchor Plate Washers

ASTM A36/A36M. Unless indicated otherwise, galvanize in accordance with ASTM A153/A153M.

2.4 STRUCTURAL STEEL ACCESSORIES

2.4.1 Welding Electrodes and Rods

AWS D1.1/D1.1M and AWS D1.8/D1.8M.

2.4.2 Non-Shrink Grout

ASTM C1107/C1107M, with no ASTM C827/C827M shrinkage. Grout must be nonmetallic.

2.4.3 Welded Shear Stud Connectors

ASTM A29/A29M, Type B. AWS D1.1/D1.1M.

2.5 GALVANIZING

ASTM F2329 for threaded parts or ASTM A123/A123M for structural steel members, as applicable, unless specified otherwise. Galvanize after fabrication where practicable. Galvanize hardwares in accordance with ASTM A153/A153M.

2.6 FABRICATION

Fabrication must be in accordance with the applicable provisions of AISC 325. Fabrication and assembly must be done in the shop to the greatest extent possible. Punch, subpunch and ream, or drill bolt holes perpendicular to the surface of the member.

Compression joints depending on contact bearing must have a surface roughness not in excess of 500 micro inch as determined by ASME B46.1, and ends must be square within the tolerances for milled ends specified in ASTM A6/A6M.

Shop splices of members between field splices will be permitted only where indicated on the Contract Drawings. Splices not indicated require the approval of the Contracting Officer.

2.6.1 Markings

Prior to erection, members must be identified by a painted erection mark. Connecting parts assembled in the shop for reaming holes in field connections must be match marked with scratch and notch marks. Do not locate erection markings on areas to be welded. Do not locate match markings in areas that will decrease member strength or cause stress concentrations.

2.6.2 Shop Primer

SSPC Paint 20 or SSPC Paint 29, (zinc rich primer). Shop prime structural steel, except as modified herein, in accordance with SSPC PA 1. Do not prime steel surfaces embedded in concrete, galvanized surfaces, or surfaces within 0.5 inch of the toe of the welds prior to welding (except surfaces on which metal decking is to be welded). If flash rusting occurs, re-clean the surface prior to application of primer. Apply primer in accordance with endorsement "P1" of AISC 201 to a minimum dry film thickness of 2.0 mil.

Slip critical surfaces must be primed with a Class B coating in accordance with AISC 325. Submit test report for Class B coating.

Prior to assembly, prime surfaces which will be concealed or inaccessible after assembly. Do not apply primer in foggy or rainy weather; when the ambient temperature is below 45 degrees F or over 95 degrees F; or when the primer may be exposed to temperatures below 40 degrees F within 48 hours

after application, unless approved otherwise by the Contracting Officer. Repair damaged primed surfaces with an additional coat of primer.

2.6.2.1 Cleaning

SSPC SP 6/NACE No.3, except steel exposed in spaces above ceilings, attic spaces, furred spaces, and chases that will be hidden to view in finished construction may be cleaned to SSPC SP 3 when recommended by the shop primer manufacturer. Maintain steel surfaces free from rust, dirt, oil, grease, and other contaminants through final assembly.

2.7 DRAINAGE HOLES

Adequate drainage holes must be drilled to eliminate water traps. Hole diameter must be 1/2 inch and location must be indicated on the detail drawings. Hole size and location must not affect the structural integrity.

PART 3 EXECUTION

3.1 ERECTION

a. Erection of structural steel, except as indicated in item b. below, must be in accordance with the applicable provisions of AISC 325.

b. For low-rise structural steel buildings (60 feet tall or less and a maximum of 2 stories), the structure must be erected in accordance with AISC DESIGN GUIDE 10.

After final positioning of steel members, provide full bearing under base plates and bearing plates using nonshrink grout. Place nonshrink grout in accordance with the manufacturer's instructions.

3.1.1 STORAGE

Material must be stored out of contact with the ground in such manner and location as will minimize deterioration.

3.2 CONNECTIONS

Except as modified in this section, connections not detailed must be designed in accordance with AISC 360. Build connections into existing work. Do not tighten anchor bolts set in concrete with impact torque wrenches. Holes must not be cut or enlarged by burning. Bolts, nuts, and washers must be clean of dirt and rust, and lubricated immediately prior to installation.

3.2.1 Common Grade Bolts

ASTM A307 bolts must be tightened to a "snug tight" fit. "Snug tight" is the tightness that exists when plies in a joint are in firm contact. If firm contact of joint plies cannot be obtained with a few impacts of an impact wrench, or the full effort of a man using a spud wrench, contact the Contracting Officer for further instructions.

3.2.2 High-Strength Bolts

Provide tension control bolts in all ASTM A325 and ASTM A490 bolted connections. Bolts must be installed in connection holes and initially brought to a snug tight fit. After the initial tightening procedure, bolts

must then be fully tensioned, progressing from the most rigid part of a connection to the free edges.

3.2.3 Tension Control Bolts

Bolts must be installed in connection holes and initially brought to a snug tight fit. After the initial tightening procedure, bolts must then be fully tensioned, progressing from the most rigid part of a connection to the free edges.

3.3 GAS CUTTING

Use of gas-cutting torch in the field for correcting fabrication errors will not be permitted on any major member in the structural framing. Use of a gas cutting torch will be permitted on minor members not under stress only after approval has been obtained from the Contracting Officer.

3.4 WELDING

Welding must be in accordance with AWS D1.1/D1.1M and AWS D1.8/D1.8M. Grind exposed welds smooth as indicated. Provide AWS D1.1/D1.1M qualified welders, welding operators, and tackers.

Develop and submit the Welding Procedure Specifications (WPS) for all welding, including welding done using prequalified procedures. Prequalified procedures may be submitted for information only; however, procedures that are not prequalified must be submitted for approval.

3.4.1 Removal of Temporary Welds, Run-Off Plates, and Backing Strips

Remove only from finished areas.

3.5 SHOP PRIMER REPAIR

Repair shop primer in accordance with the paint manufacturer's recommendation for surfaces damaged by handling, transporting, cutting, welding, or bolting.

3.5.1 Field Priming

Steel exposed to the weather, or located in building areas without HVAC for control of relative humidity must be field primed. After erection, the field bolt heads and nuts, field welds, and any abrasions in the shop coat must be cleaned and primed with paint of the same quality as that used for the shop coat.

3.6 GALVANIZING REPAIR

Repair damage to galvanized coatings using ASTM A780/A780M zinc rich paint for galvanizing damaged by handling, transporting, cutting, welding, or bolting. Do not heat surfaces to which repair paint has been applied.

3.7 FIELD QUALITY CONTROL

Perform field tests, and provide labor, equipment, and incidentals required for testing. The Contracting Officer must be notified in writing of defective welds, bolts, nuts, and washers within 7 working days of the date of the inspection.

3.7.1 Welds

3.7.1.1 Visual Inspection

AWS D1.1/D1.1M. Furnish the services of AWS-certified welding inspectors for fabrication and erection inspection and testing and verification inspections.

3.7.1.2 Nondestructive Testing

Nondestructive testing must be in accordance with AWS D1.1/D1.1M and AWS D1.8/D1.8M. Test locations and frequency must be selected by the Contracting Officer. If more than 20 percent of welds made by a welder contain defects identified by testing, then all welds made by that welder must be tested by ultrasonic testing, as approved by the Contracting Officer. When all welds made by an individual welder are required to be tested, magnetic particle testing must be used only in areas inaccessible to ultrasonic testing. Retest defective areas after repair. Submit weld inspection reports.

3.7.2 High-Strength Bolts

3.7.2.1 Testing Bolt, Nut, and Washer Assemblies

Test a minimum of 3 bolt, nut, and washer assemblies from each mill certificate batch in a tension measuring device at the job site prior to the beginning of bolting start-up. Demonstrate that the bolts and nuts, when used together, can develop tension not less than the provisions specified in AISC 360, depending on bolt size and grade. The bolt tension must be developed by tightening the nut. A representative of the manufacturer or supplier must be present to ensure that the fasteners are properly used, and to demonstrate that the fastener assemblies supplied satisfy the specified requirements. Submit bolt testing reports.

3.7.2.2 Inspection

Inspection procedures must be in accordance with AISC 360. Confirm and report to the Contracting Officer that the materials meet the project specification and that they are properly stored. Confirm that the faying surfaces have been properly prepared before the connections are assembled. Observe the specified job site testing and calibration, and confirm that the procedure to be used provides the required tension. Monitor the work to ensure the testing procedures are routinely followed on joints that are specified to be fully tensioned.

3.7.2.3 Testing

The Government has the option to perform nondestructive tests on 5 percent of the installed bolts to verify compliance with pre-load bolt tension requirements. Provide the required access for the Government to perform the tests. The nondestructive testing will be done in-place using an ultrasonic measuring device or any other device capable of determining in-place pre-load bolt tension. The test locations must be selected by the Contracting Officer. If more than 10 percent of the bolts tested contain defects identified by testing, then all bolts used from the batch from which the tested bolts were taken, must be tested at the Contractor's

expense. Retest new bolts after installation at the Contractor's expense.

3.7.3 Testing for Embrittlement

ASTM A143/A143M for steel products hot-dip galvanized after fabrication. Submit embrittlement test reports.

-- End of Section --

SECTION 05 30 10

LONG-SPAN ROOF DECKS
04/06

PART 1 GENERAL

1.1 REFERENCES

The publications listed below form a part of this specification to the extent referenced. The publications are referred to within the text by the basic designation only.

AMERICAN IRON AND STEEL INSTITUTE (AISI)

AISI SG-973	(2002) Cold-Formed Steel Design Manual

AMERICAN WELDING SOCIETY (AWS)

AWS D1.1/D1.1M	(2010; Errata 2011) Structural Welding Code - Steel
AWS D1.3/D1.3M	(2008; Errata 2008) Structural Welding Code - Sheet Steel

ASTM INTERNATIONAL (ASTM)

ASTM A780/A780M	(2009) Standard Practice for Repair of Damaged and Uncoated Areas of Hot-Dip Galvanized Coatings

FM GLOBAL (FM)

FM DS 1-28	(2002) Design Wind Loads
FM P7825	(2005) Approval Guide

THE SOCIETY FOR PROTECTIVE COATINGS (SSPC)

SSPC Paint 20	(2002; E 2004) Zinc-Rich Primers (Type I, Inorganic, and Type II, Organic)

U.S. DEPARTMENT OF DEFENSE (DOD)

UFC 3-301-01	(2013) Structural Engineering

UNDERWRITERS LABORATORIES (UL)

UL 580	(2006; Reprint Jul 2009) Tests for Uplift Resistance of Roof Assemblies
UL Bld Mat Dir	(2012) Building Materials Directory

1.2 SUBMITTALS

Government approval is required for submittals with a "G" designation; submittals not having a "G" designation are for Contractor Quality Control approval. The following shall be submitted in accordance with Section

01 33 00 SUBMITTAL PROCEDURES:

SD-02 Shop Drawings

Fabrication Drawings; G

Submit drawings showing panel placement, profiles, material thickness, finishes, layout, anchorage and openings as dimensioned on the contract drawings.

SD-03 Product Data

Deck Units; G

Accessories

Mechanical Screw Fasteners; G

SD-04 Samples

Deck Units

Closure Strips

Accessories

SD-05 Design Data

Deck Units; G

Submit manufacturer's design calculations, or applicable published literature for the structural properties of the proposed deck units (including load tables, diaphragm shear tables, dimensions, and finishes).

SD-07 Certificates

Deck Units

Accessories

Qualification of Welders

Fire Safety

Wind Storm Resistance

1.3 QUALITY ASSURANCE

1.3.1 Deck Units

Deck units and accessories shall be products of a manufacturer regularly engaged in manufacture of steel decking. Provide manufacturer's certificates attesting that the decking material meets the specified requirements.

1.3.2 Qualification of Welders

Provide welder qualification procedures, welder qualifications, and

duration of qualification period in accordance with AWS D1.1/D1.1M and AWS D1.3/D1.3M.

1.3.3 Regulatory Requirements

1.3.3.1 Fire Safety

Roof deck shall have been tested as a part of a roof deck construction assembly of the type used for this project, shall be listed as fire classified in the UL Bld Mat Dir, or listed as Class I construction in the FM P7825, and so labeled.

1.3.3.2 Wind Storm Resistance

The roof construction assembly shall be capable of withstanding an uplift pressure of 60 pounds per square foot when tested in accordance with the uplift pressure test described in the FM DS 1-28 or as described in UL 580 and in general compliance with UFC 3-301-01.

1.3.4 Fabrication Drawings

Show type and location of units, location and sequence of connections, bearing on supports, methods of anchoring, attachment of accessories, adjusting plate details, size and location of holes to be cut and reinforcement to be provided, the manufacturer's erection instructions and other pertinent details.

1.4 DELIVERY, STORAGE, AND HANDLING

Deliver deck units to the site in a dry and undamaged condition. Store and handle steel deck in a manner to protect it from corrosion, deformation, and other types of damage. Do not use decking for storage or as working platform until units have been fastened into position. Exercise care not to damage material or overload decking during construction. The maximum uniform distributed storage load shall not exceed the design live load. Stack decking on platforms or pallets and cover with weathertight ventilated covering. Elevate one end during storage to provide drainage. Maintain deck finish at all times to prevent formation of rust. Repair deck finish using touch-up paint. Replace damaged material.

1.5 COORDINATION

Coordinate the fastener length for attaching roofing and thermal insulation to avoid penetrating the finished bottom surface of the long-span roof deck.

PART 2 PRODUCTS

2.1 MATERIALS

2.1.1 Steel Sheet

Flat rolled carbon steel sheets of structural quality, thickness not less than indicated meeting the requirements of AISI SG-973, except as modified herein.

2.1.2 Steel Coating

a. Before forming, the steel coils shall have received a hot-dip protective coating of zinc conforming to ASTM A924, Class G60, as defined in ASTM A653.

b. The minimum uncoated thickness of the steel furnished shall not be less than 95% of the design thickness.

2.2 ACCESSORIES

a. Provide accessories of same material as deck, unless specified otherwise. Provide manufacturer's standard type accessories, as specified.

b. Openings and reinforcement for openings noted specifically by the deck manufacturer on the drawings shall be provided.

2.2.1 End Closures

Fabricated of sheet metal by the deck manufacturer. Provide end closures minimum 0.028 inch thick to close open ends at exposed edges of floors, parapets, end walls, eaves, and openings through deck.

2.2.2 Partition Closures

Provide closures for closing voids above interior walls and partitions that are perpendicular to the direction of the configurations. Provide rubber, plastic, or sheet steel closures above typical partitions. Provide sheet steel closures above fire-resistant interior walls and partitions located on both sides of wall or partition.

2.2.3 Sheet Metal Collar

Where deck is cut for passage of pipes, ducts, columns, etc., and deck is to remain exposed, provide a neatly cut sheet metal collar to cover edges of deck. Do not cut deck until after installation of supplemental supports.

2.2.4 Cover Plates

Sheet metal to close panel edge and end conditions, and where panels change direction or butt. Polyethylene-coated, self-adhesive, 2 inch wide joint tape may be provided in lieu of cover plates on flat-surfaced decking butt joints.

2.2.5 Column Closures

Sheet metal, minimum 0.0358 inch thick or metal rib lath.

2.2.6 Access Hole Covers

Sheet metal, minimum 0.0474 inch thick.

2.2.7 Miscellaneous Accessories

The manufacturer's standard accessories shall be furnished as necessary to complete the deck installation. Metal accessories shall be of the same material as the deck and have minimum design thickness as follows:

saddles, 0.0474 inch; welding washers, 0.0598 inch; cant strip, 0.0295 inch; other metal accessories, 0.0358 inch; unless otherwise indicated. Accessories shall include but not be limited to saddles, welding washers, fasteners, cant strips, butt cover plates, underlapping sleeves, and ridge and valley plates.

2.3 FABRICATION

2.3.1 Deck Units

The long-span roof deck shall be cold-formed from steel coils conforming to ASTM A653, structural quality, with a minimum yield strength of 40 ksi. Roof deck shall be cold-formed by the continuous roll forming process and resistance-welded together to form an integral cellular unit consisting of upper and lower layers of deck.

a. Roof deck shall have interlocking sidelaps suitable for screw or weld fastening.

b. Roof deck shall have roll-formed embossments located between the longitudinal stiffening ribs in the top flanges and horizontal stiffening ribs along the vertical webs to enhance the structural performance.

c. Shallow stiffening ribs shall be roll-formed into the bottom plates of roof deck. The ribs shall be located in the area between the webs to enhance flatness of the bottom plate.

2.3.2 Shop Priming

The bottom surface of the roof deck shall be prime painted with manufacturer's standard white color. After forming and welding the painted material, all welds shall be painted at the factory to ensure that all exposed welds are coated. Before painting, the exposed galvanized steel panel shall be chemically cleaned, receive an acid wash pretreatment, followed by a coat of manufacturer's standard white primer, and oven baked. Coordinate the compatibility of the factory applied prime paint with the field applied finish paint system.

2.3.3 Touch-Up Paint

Touch-up paint for shop-painted units shall be of the same type used for the shop painting, and touch-up paint for zinc-coated units shall be an approved galvanizing repair paint with a high-zinc dust content. Welds shall be touched-up with paint conforming to SSPC Paint 20 in accordance with ASTM A780/A780M. Finish of deck units and accessories shall be maintained by using touch-up paint whenever necessary to prevent the formation of rust.

PART 3 EXECUTION

3.1 EXAMINATION

Prior to installation of decking units and accessories, examine worksite to verify that as-built structure will permit installation of decking system without modification.

3.2 INSTALLATION

Install steel deck units in accordance with the manufacturer's instructions and approved shop drawings. Place units on structural supports, properly adjusted, leveled, and aligned at right angles to supports before permanently securing in place. Damaged deck and accessories including material which is permanently stained or contaminated, deformed, or with burned holes shall not be installed. Extend deck units over three or more supports unless absolutely impractical. Report inaccuracies in alignment or leveling to the Contracting Officer and make necessary corrections before permanently anchoring deck units. Do not use unanchored deck units as a work or storage platform. Construction loads shall not be applied to the roof deck until after the panels are permanently fastened to supporting members, and sidelaps are attached. The construction loads shall not exceed the capacity of the panels. Permanently anchor units placed by the end of each working day. Do not support suspended ceilings, light fixtures, ducts, utilities, or other loads by steel deck unless indicated. Loads shall be distributed by appropriate means to prevent damage.

3.2.1 Attachment

Immediately after placement and alignment, and after correcting inaccuracies, permanently fasten steel deck units to structural supports by welding with 3/4 inch diameter puddle welds as indicated on the design drawings or approved erection drawings and in accordance with manufacturer's recommended procedure (minimum two welds per 18" wide panels).

The sides of the roof deck located at the perimeter of the building shall be fastened to supporting members with 3/4" diameter puddle welds at a maximum spacing of 36" on center or less as indicated on the manufacturer's erection drawings.

The sidelaps of the roof deck shall be fastened together with 1 1/2" long fillet welds or #14 screws at maximum spacing of 36" on center or less as indicated on the manufacturer's erection drawings. Button punch shall not be used unless specifically indicated on the contract drawings.

Sump pans, ridge plates, valley plates, transition plates, eave plates, and supplied reinforcement for small openings shall be fastened as indicated on the manufacturer's erection drawings.

Clamp or weight deck units to provide firm contact between deck units and structural supports while performing welding or fastening. Anchoring the deck to structural supports with powder-actuated fasteners or pneumatically driven fasteners is prohibited. Attachment of adjacent deck units by button-punching is prohibited.

3.2.1.1 Welding

Perform welding in accordance with AWS D1.3/D1.3M using methods and electrodes recommended by the manufacturers of the base metal alloys being used. Ensure only operators previously qualified by tests prescribed in AWS D1.1/D1.1M and AWS D1.3/D1.3M make welds. Immediately recertify, or replace with qualified welders, welders that have passed qualification tests but are producing unsatisfactory welding. Location, size, and spacing of fastening shall be as indicated. Welding washers shall be used

at the connections of the deck to supports as required. Welding washers shall not be used at sidelaps. Holes and similar defects will not be acceptable. Immediately clean welds by chipping and wire brushing. Heavily coat welds, cut edges and damaged portions of coated finish with zinc-dust paint conforming to ASTM A780/A780M or shop primed finish with the manufacturer's standard touch-up paint.

3.2.1.2 Fastening

Anchor deck to adjoining units with welds or mechanical screw fasteners as recommended by the Steel Deck Institute and the steel deck manufacturer, as approved by the Contracting Officer.

3.2.2 Openings

All holes and openings required shall be neatly cut or drilled holes and be coordinated with the drawings, specifications, and other trades. Unless indicated otherwise, holes and openings 6 to 12 inches across shall be reinforced by a minimum 0.0474 inch thick steel sheet at least 12 inches wider and longer than the opening and be fastened to the steel deck at each corner of the sheet and at a maximum of 6 inches on center. Holes and openings larger than 12 inches shall not be cut unless previously coordinated with the manufacturer and included in the design of the deck.

3.2.3 Accessory Installation

3.2.3.1 Adjusting Plates

Install as shown on shop drawings.

3.2.3.2 End Closures

Provide end closure to close open ends of cells at columns, walls, and openings in deck.

3.2.3.3 Closures Above Partitions

Provide for closing voids between cells over partitions that are perpendicular to direction of cells. Provide a one-piece closure strip for partitions 4 inches nominal or less in thickness and two-piece closure strips for wider partitions. Provide sheet metal closures above fire-rated partitions at both sides of partition with space between filled with fiberglass insulation.

3.2.3.4 Cover Plates

Where concrete leakage would be a problem, provide metal cover plates, or joint tape, at joints between decking sheets, to be covered with concrete fill.

3.2.3.5 Column Closures

Provide for spaces between floor decking and columns which penetrate the deck. Field cut closure plate to fit column in the field and tack weld to decking and columns.

3.2.3.6 Access Hole Covers

Provide to seal holes cut in decking to facilitate welding of decking to

structural supports.

3.2.3.7 Hangers

Provide as indicated to support suspended ceilings. Space devices so as to provide one device per 6.25 square feet or as indicated.

3.3 FIELD QUALITY CONTROL

3.3.1 Decks Not Receiving Concrete

Inspect the decking top surface for distortion after installation. For roof decks not receiving concrete, verify distortion by placing a straight edge across three adjacent top flanges. The maximum allowable gap between the straight edge and the top flanges is 1/16 inch; when gap is more than 1/16 inch, provide corrective measures or replacement. Reinspect decking after performing corrective measures or replacement.

3.3.2 Coating Repair and Preparation

Galvanizing and other coatings that are damaged shall be field repaired using appropriate methods. The bottom surface of the roof deck shall be cleaned prior to field painting.

-- End of Section --

SECTION 05 50 13

MISCELLANEOUS METAL FABRICATIONS
05/10

PART 1 GENERAL

1.1 REFERENCES

The publications listed below form a part of this specification to the extent referenced. The publications are referred to within the text by the basic designation only.

ALUMINUM ASSOCIATION (AA)

AA DAF45	(2003; Reaffirmed 2009) Designation System for Aluminum Finishes

AMERICAN INSTITUTE OF STEEL CONSTRUCTION (AISC)

AISC 303	(2010) Code of Standard Practice for Steel Buildings and Bridges
AISC 325	(2011) Steel Construction Manual

AMERICAN SOCIETY OF SAFETY ENGINEERS (ASSE/SAFE)

ASSE/SAFE A10.3	(2013) Operations - Safety Requirements for Powder Actuated Fastening Systems

AMERICAN WELDING SOCIETY (AWS)

AWS D1.1/D1.1M	(2010; Errata 2011) Structural Welding Code - Steel

ASME INTERNATIONAL (ASME)

ASME B18.2.1	(2012; Errata 2013) Square and Hex Bolts and Screws (Inch Series)
ASME B18.2.2	(2010) Nuts for General Applications: Machine Screw Nuts, Hex, Square, Hex Flange, and Coupling Nuts (Inch Series)
ASME B18.21.1	(2009) Washers: Helical Spring-Lock, Tooth Lock, and Plain Washers (Inch Series)
ASME B18.6.2	(1998; R 2010) Slotted Head Cap Screws, Square Head Set Screws, and Slotted Headless Set Screws: Inch Series
ASME B18.6.3	(2013) Machine Screws, Tapping Screws, and Machine Drive Screws (Inch Series)

ASTM INTERNATIONAL (ASTM)

ASTM A123/A123M	(2013) Standard Specification for Zinc

	(Hot-Dip Galvanized) Coatings on Iron and Steel Products
ASTM A1554	Standard Specification for Anchor Bolts, Steel, 36, 55, and 105-ksi Yield Strength
ASTM A153/A153M	(2009) Standard Specification for Zinc Coating (Hot-Dip) on Iron and Steel Hardware
ASTM A307	(2012) Standard Specification for Carbon Steel Bolts and Studs, 60 000 PSI Tensile Strength
ASTM A36/A36M	(2012) Standard Specification for Carbon Structural Steel
ASTM A467/A467M	(2007; R 2012) Standard Specification for Machine Coil Chain
ASTM A47/A47M	(1999; R 2009) Standard Specification for Ferritic Malleable Iron Castings
ASTM A48/A48M	(2003; R 2012) Standard Specification for Gray Iron Castings
ASTM A500/A500M	(2013) Standard Specification for Cold-Formed Welded and Seamless Carbon Steel Structural Tubing in Rounds and Shapes
ASTM A53/A53M	(2012) Standard Specification for Pipe, Steel, Black and Hot-Dipped, Zinc-Coated, Welded and Seamless
ASTM A653/A653M	(2013) Standard Specification for Steel Sheet, Zinc-Coated (Galvanized) or Zinc-Iron Alloy-Coated (Galvannealed) by the Hot-Dip Process
ASTM A780/A780M	(2009) Standard Practice for Repair of Damaged and Uncoated Areas of Hot-Dip Galvanized Coatings
ASTM A786/A786M	(2005; R 2009) Standard Specification for Hot-Rolled Carbon, Low-Alloy, High-Strength Low-Alloy, and Alloy Steel Floor Plates
ASTM A924/A924M	(2013) Standard Specification for General Requirements for Steel Sheet, Metallic-Coated by the Hot-Dip Process
ASTM B108/B108M	(2012; E 2012) Standard Specification for Aluminum-Alloy Permanent Mold Castings
ASTM B209	(2010) Standard Specification for Aluminum and Aluminum-Alloy Sheet and Plate

ASTM B221	(2013) Standard Specification for Aluminum and Aluminum-Alloy Extruded Bars, Rods, Wire, Profiles, and Tubes
ASTM B26/B26M	(2012) Standard Specification for Aluminum-Alloy Sand Castings
ASTM C1513	(2013) Standard Specification for Steel Tapping Screws for Cold-Formed Steel Framing Connections
ASTM D1187/D1187M	(1997; E 2011; R 2011) Asphalt-Base Emulsions for Use as Protective Coatings for Metal

MASTER PAINTERS INSTITUTE (MPI)

MPI 79	(Oct 2009) Alkyd Anti-Corrosive Metal Primer

NATIONAL ASSOCIATION OF ARCHITECTURAL METAL MANUFACTURERS (NAAMM)

NAAMM AMP 521	(R 2012) Pipe Railing Manual
NAAMM MBG 531	(2009) Metal Bar Grating Manual

THE SOCIETY FOR PROTECTIVE COATINGS (SSPC)

SSPC SP 3	(1982; E 2004) Power Tool Cleaning
SSPC SP 6/NACE No.3	(2007) Commercial Blast Cleaning

1.2 SUBMITTALS

Government approval is required for submittals with a "G" designation; submittals not having a "G" designation are for Contractor Quality Control approval. Submit the following in accordance with Section 01 33 00 SUBMITTAL PROCEDURES:

SD-02 Shop Drawings

Fabrication drawings of structural steel stairs; G

Floor gratings and walkways, installation drawings; G

Ladders, installation drawings; G

Handrails, installation drawings; G

Embedded angles and plates, installation drawings; G

Submit fabrication drawings showing layout(s), connections to structural system, and anchoring details as specified in AISC 303.

Submit templates, erection and installation drawings indicating thickness, type, grade, class of metal, and dimensions. Show construction details, reinforcement, anchorage, and installation with relation to the building construction.

SD-03 Product Data

Handrails

Ladders

Floor gratings and walkways

1.3 QUALIFICATION OF WELDERS

Qualify welders in accordance with AWS D1.1/D1.1M. Use procedures, materials, and equipment of the type required for the work.

1.4 DELIVERY, STORAGE, AND PROTECTION

Protect from corrosion, deformation, and other types of damage. Store items in an enclosed area free from contact with soil and weather. Remove and replace damaged items with new items.

PART 2 PRODUCTS

2.1 MATERIALS

2.1.1 Structural Carbon Steel

ASTM A36/A36M.

2.1.2 Structural Tubing

ASTM A500/A500M.

2.1.3 Steel Pipe

ASTM A53/A53M, Type E or S, Grade B.

2.1.4 Fittings for Steel Pipe

Standard malleable iron fittings ASTM A47/A47M.

2.1.5 Gratings

a. Gray cast iron ASTM A48/A48M, Class 40.

b. Metal plank grating, non-slip requirement, aluminum ASTM B209, 6061-T6; steel ASTM A653/A653M, G90.

c. Metal bar type grating NAAMM MBG 531.

2.1.6 Floor Plates, Patterned

Floor plate ASTM A786/A786M. Steel plate shall not be less than 14 gage.

2.1.7 Anchor Bolts

ASTM A1554 Grade 36 or ASTM A307 Grade C, unless noted otherwise. Where exposed, shall be of the same material, color, and finish as the metal to which applied, unless indicated otherwise. Hot-dipped galvanized, unless noted otherwise.

2.1.7.1 Expansion Anchors and Adhesive Anchors

a. Furnish sizes and types indicated and install to conform to manufacturer's printed instructions.

b. Concrete anchors that are not specifically indicated to be high strength steel or stainless steel shall be carbon steel hot dipped galvanized in accordance with manufacturer's standard.

c. Anchors indicated to be high strength steel anchors shall be surface plated (or galvanized) in accordance with manufacturer's standard.

d. Anchors indicated to be stainless steel shall be Type 316.

e. Adhesive anchors shall be non-epoxy adhesive type anchors unless indicated to be epoxy adhesive type anchors.

f. Installed adhesive anchors shall not be disturbed or loaded until the anchor has been in place longer than the manufacturer's cure time for the adhesive.

g. Anchors shall be ICC/ICBO approved for the current Local Building Code.

h. Minimum embedment of wedge-type expansion anchors shall be as follows, unless otherwise indicated:

Anchor size	Minimum Embedment
1/4 inch	1-1/8 inches
3/8 inch	1-3/4 inches
1/2 inch	2-1/4 inches
5/8 inch	2-3/4 inches
3/4 inch	3-3/8 inches
7/8 inch	3-7/8 inches
1 inch	4-1/2 inches
1-1/4 inches	5-5/8 inches

i. Minimum embedment for epoxy adhesive anchors shall be as follows, unless otherwise indicated:

Size	Carbon Steel	High Strength	Steel Stainless Steel
3/8 inch	1-3/4 inches	4-1/2 inches	3-1/2 inches
1/2 inch	2-1/4 inches	6 inches	4-1/2 inches
5/8 inch	2-7/8 inches	7-1/2 inches	5-5/8 inches

Size	Carbon Steel	High Strength	Steel Stainless Steel
3/4 inch	3-3/8 inches	9 inches	6-3/4 inches
7/8 inch	4 inches	10-1/2 inches	7-7/8 inches
1 inch	4-1/2 inches	12 inches	9 inches
1-1/4 inches	5-5/8 inches	15 inches	11-1/4 inches

2.1.7.2 Lag Screws and Bolts

ASME B18.2.1, type and grade best suited for the purpose.

2.1.7.3 Toggle Bolts

ASME B18.2.1.

2.1.7.4 Bolts, Nuts, Studs and Rivets

ASME B18.2.2 or ASTM A307.

2.1.7.5 Powder Actuated Fasteners

Follow safety provisions of ASSE/SAFE A10.3.

2.1.7.6 Screws

ASME B18.2.1, ASME B18.6.2, ASME B18.6.3 and ASTM C1513.

2.1.7.7 Washers

Provide plain washers to conform to ASME B18.21.1. Provide beveled washers for American Standard beams and channels, square or rectangular, tapered in thickness, and smooth. Provide lock washers to conform to ASME B18.21.1.

2.1.8 Aluminum Alloy Products

Conform to ASTM B209 for sheet plate, ASTM B221 for extrusions and ASTM B26/B26M or ASTM B108/B108M for castings, as applicable. Provide aluminum extrusions at least 1/8 inch thick and aluminum plate or sheet at least 0.050 inch thick.

2.2 FABRICATION FINISHES

2.2.1 Galvanizing

Hot-dip galvanize items specified to be zinc-coated, after fabrication where practicable. Galvanizing: ASTM A123/A123M, ASTM A153/A153M, ASTM A653/A653M or ASTM A924/A924M, G90, as applicable.

2.2.2 Galvanize

Anchor bolts, grating fasteners, washers, and parts or devices necessary for proper installation, unless indicated otherwise.

2.2.3 Repair of Zinc-Coated Surfaces

Repair damaged surfaces with galvanizing repair method and paint conforming to ASTM A780/A780M or by application of stick or thick paste material specifically designed for repair of galvanizing, as approved by Contracting Officer. Clean areas to be repaired and remove slag from welds. Heat surfaces to which stick or paste material is applied, with a torch to a temperature sufficient to melt the metallics in stick or paste; spread molten material uniformly over surfaces to be coated and wipe off excess material.

2.2.4 Shop Cleaning and Painting

2.2.4.1 Surface Preparation

Blast clean surfaces in accordance with SSPC SP 6/NACE No.3. Surfaces that will be exposed in spaces above ceiling or in attic spaces, crawl spaces, furred spaces, and chases may be cleaned in accordance with SSPC SP 3 in lieu of being blast cleaned. Wash cleaned surfaces which become contaminated with rust, dirt, oil, grease, or other contaminants with solvents until thoroughly clean. Steel to be embedded in concrete shall be free of dirt and grease. Do not paint or galvanize bearing surfaces, including contact surfaces within slip critical joints, but coat with rust preventative applied in the shop.

2.2.4.2 Pretreatment, Priming and Painting

Apply pretreatment, primer, and paint in accordance with manufacturer's printed instructions. On surfaces concealed in the finished construction or not accessible for finish painting, apply an additional prime coat to a minimum dry film thickness of 1.0 mil. Tint additional prime coat with a small amount of tinting pigment.

2.2.5 Nonferrous Metal Surfaces

Protect by plating, anodic, or organic coatings.

2.2.6 Aluminum Surfaces

2.2.6.1 Surface Condition

Before finishes are applied, remove roll marks, scratches, rolled-in scratches, kinks, stains, pits, orange peel, die marks, structural streaks, and other defects which will affect uniform appearance of finished surfaces.

2.2.6.2 Aluminum Finishes

Unexposed sheet, plate and extrusions may have mill finish as fabricated. Sandblast castings' finish, medium, AA DAF45. Unless otherwise specified, provide all other aluminum items with a standard mill finish. Provide a coating thickness not less than that specified for protective and decorative type finishes for items used in interior locations or architectural Class I type finish for items used in exterior locations in AA DAF45. Provide a polished satin finish on items to be anodized.

2.3 FLOOR GRATINGS AND WALKWAYS

Design steel grating in accordance with NAAMM MBG 531 for bar type grating or manufacturer's charts for plank grating. Galvanize steel floor gratings

unless indicated otherwise.

a. Where not specifically sized, design floor gratings to support a live load of 60 pounds per square foot for the spans indicated, with maximum deflection of L/240.

b. NAAMM MBG 531, band edges of grating with bars of the same size as the bearing bars. Weld banding in accordance with the manufacturer's standard for trim unless otherwise indicated. Design tops of bearing bars, cross or intermediate bars to be in the same plane and match grating finish.

c. Attach gratings to structural members with welded-on anchors. Gratings indicated to be removable shall be attached using anchors that will allow grating removed in the future.

2.4 MISCELLANEOUS PLATES AND SHAPES

Provide for items that do not form a part of the structural steel framework, such as lintels, sill angles, miscellaneous mountings and frames. Provide lintels fabricated from structural steel shapes over openings in masonry walls and partitions as indicated and as required to support wall loads over openings. Provide with connections and welds. Construct to have at least 8 inches bearing on masonry at each end.

Provide angles and plates, ASTM A36/A36M, for embedment as indicated. Galvanize embedded items exposed to the elements according to ASTM A123/A123M.

2.5 2.11 GUARD POSTS (BOLLARDS/PIPE GUARDS)

Provide in size as indicated galvanized weight steel pipe as specified in ASTM A53/A53M. Anchor posts in concrete as indicated and fill solidly with concrete with minimum compressive strength of 2500 psi.

2.6 2.12 HANDRAILS

Design handrails to resist a concentrated load of 200 lbs in any direction at any point of the top of the rail or 50 lbs per foot applied horizontally to top of the rail, whichever is more severe. NAAMM AMP 521, provide the same size rail and post. Provide pipe collars of the same material and finish as the handrail and posts.

2.6.1 2.12.1 Steel Handrails, Including Carbon Steel Inserts

Provide steel handrails, including inserts in concrete, steel pipe conforming to ASTM A53/A53M. Provide steel railings of 1 1/2 inches nominal size. Railings to be hot-dip galvanized.

a. Fabrication: Joint posts, rail, and corners as indicated using one of the following methods:

(1) Mitered and welded joints made by fitting post to top rail and intermediate rail to post, mitering corners, groove welding joints, and grinding smooth. Butt railing splices and reinforce them by a tight fitting interior sleeve not less than 6 inches long.

(2) Railings may be bent at corners in lieu of jointing, provided bends are made in suitable jigs and the pipe is not crushed.

2.7 2.7 LADDERS

Fabricate vertical ladders conforming to Section 7 of 29 CFR 1910.27. Use 2 1/2 by 3/8 inch steel flats for stringers and 3/4 inch diameter steel rods for rungs. Rungs to be not less than 16 inches wide, spaced one foot apart, plug welded or shouldered and headed into stringers. Install ladders so that the distance from the rungs to the finished wall surface will not be less than 7 inches. Provide heavy clip angles riveted or bolted to the stringer and drilled for not less than two 1/2 inch diameter expansion bolts. Provide intermediate clip angles not over 48 inches on centers.

2.8 2.16 SAFETY NOSINGS FOR CONCRETE TREADS

Provide safety nosings of cast iron with cross-hatched abrasive-surfaces, or extruded aluminum with abrasive inserts. Nosing to be at least 4 inches wide and 1/4 inch thick and terminating at not more than 6 inches from the ends of treads for metal-pan cement-filled treads extending the full length of the tread for stairs and as indicated for platforms and landings. Provide safety nosings with anchors embedded a minimum of 3/4 inch in the concrete and with tops flush with the top of the traffic surface.

2.9 2.20 STEEL STAIRS

Provide steel stairs complete with stringers, steel-plate treads and risers, metal-pan concrete-filled treads, landings, columns, handrails, and necessary bolts and other fastenings. Steel stairs and accessories to be hot-dip galvanized.

2.9.1 2.20.1 Design Loads

Design stairs to sustain a live load of not less than 60 pounds per square foot, or a concentrated load of 250 applied where it is most critical. Conform to AISC 325 with the design and fabrication of steel stairs, other than a commercial product.

2.9.2 2.20.2 Materials

Provide steel stairs of welded construction except that bolts may be used where welding is not practicable. Screw or screw-type connections are not permitted.

a. Structural Steel: ASTM A36/A36M.

b. Gratings for Treads and Landings: NAAMM MBG 531. Provide gratings with checkered plate nosings.

c. Support steel floor plate or metal pan for concrete fill on angle cleats welded to stringers or treads with integral cleats, welded or bolted to the stringer. Provide sheet-steel landings with angle stiffeners welded on. Close exposed ends.

d. Before fabrication, obtain necessary field measurements and verify drawing dimensions.

e. Clean metal surfaces free from mill scale, flake rust and rust pitting prior to shop finishing. Weld permanent connections. Finish welds flush and smooth on surfaces that will be exposed after installation.

2.10 SAFETY CHAINS

Construct safety chains of galvanized steel, straight link type, 3/16 inch diameter, with at least twelve links per foot, and with snap hooks on each end. Test safety chain in accordance with ASTM A467/A467M, Class CS. Provide snap hooks of boat type. Provide galvanized 3/8 inch bolt with 3/4 inch eye diameter for attachment of chain, anchored as indicated. Supply two chains, 4 inches longer than the anchorage spacing, for each guarded area. Locate safety chain where indicated. Mount the top chain feet 6 inches above the floor and mount the lower chain 2 feet above the floor.

2.11 DOWNSPOUT BOOTS

Provide cast iron downspout boots with receiving bells sized to fit downspouts.

PART 3 EXECUTION

3.1 GENERAL INSTALLATION REQUIREMENTS

Install items at locations indicated, according to manufacturer's instructions. Verify all measurements and take all field measurements necessary before fabrication. Exposed fastenings shall be compatible materials, shall generally match in color and finish, and harmonize with the material to which fastenings are applied. Include materials and parts necessary to complete each item, even though such work is not definitely shown or specified. Poor matching of holes for fasteners shall be cause for rejection. Conceal fastenings where practicable. Thickness of metal and details of assembly and supports shall provide strength and stiffness. Form joints exposed to the weather shall be formed to exclude water. Items listed below require additional procedures.

3.2 WORKMANSHIP

Provide miscellaneous metalwork that is well formed to shape and size, with sharp lines and angles and true curves. Drilling and punching shall produce clean true lines and surfaces. Provide continuous welding along the entire area of contact except where tack welding is permitted. Do not tack weld exposed connections of work in place and ground smooth. Provide a smooth finish on exposed surfaces of work in place and unless otherwise approved, flush exposed riveting. Mill joints where tight fits are required. Corner joints shall be coped or mitered, well formed, and in true alignment. Accurately set work to established lines and elevations and securely fastened in place. Install in accordance with manufacturer's installation instructions and approved drawings, cuts, and details.

3.3 ANCHORAGE, FASTENINGS, AND CONNECTIONS

Provide anchorage where necessary for fastening miscellaneous metal items securely in place. Include for anchorage not otherwise specified or indicated slotted inserts, expansion shields, and powder-driven fasteners, when approved for concrete; toggle bolts and through bolts for masonry; machine and carriage bolts for steel; through bolts, lag bolts, and screws for wood. Do not use wood plugs in any material. Provide non-ferrous attachments for non-ferrous metal. Make exposed fastenings of compatible materials, generally matching in color and finish, to which fastenings are applied. Conceal fastenings where practicable.

3.4 BUILT-IN WORK

Form for anchorage metal work built-in with concrete or masonry, or provide with suitable anchoring devices as indicated or as required. Furnish metal work in ample time for securing in place as the work progresses.

3.5 WELDING

Perform welding, welding inspection, and corrective welding, in accordance with AWS D1.1/D1.1M. Use continuous welds on all exposed connections. Grind visible welds smooth in the finished installation.

3.6 FINISHES

3.6.1 Dissimilar Materials

Where dissimilar metals are in contact, protect surfaces with a coat conforming to MPI 79 to prevent galvanic or corrosive action. Where aluminum is in contact with concrete, plaster, mortar, masonry, wood, or absorptive materials subject to wetting, protect with ASTM D1187/D1187M, asphalt-base emulsion.

3.6.2 Field Preparation

Remove rust preventive coating just prior to field erection, using a remover approved by the rust preventive manufacturer. Surfaces, when assembled, shall be free of rust, grease, dirt and other foreign matter.

3.6.3 Environmental Conditions

Do not clean or paint surface when damp or exposed to foggy or rainy weather, when metallic surface temperature is less than 5 degrees F above the dew point of the surrounding air, or when surface temperature is below 45 degrees F or over 95 degrees F, unless approved by the Contracting Officer.

3.7 HANDRAILS

Toeboards and brackets shall be installed where indicated. Splices, where required, shall be made at expansion joints. Removable sections shall be installed as indicated.

3.7.1 Steel Handrail

Install in pipe sleeves embedded in concrete and filled with non-shrink grout or quick setting anchoring cement with anchorage covered with standard pipe collar pinned to post by means of base plates bolted to stringers or structural steel frame work. Secure rail ends by steel pipe flanges anchored by expansion shields and bolts.

3.8 STEEL STAIRS

Provide anchor bolts, grating fasteners, washers, and all parts or devices necessary for proper installation. Provide lock washers under nuts.

3.9 INSTALLATION OF GUARD POSTS (BOLLARDS/PIPE GUARDS)

Pipe guards shall be set vertically in concrete piers. Piers shall be constructed of, and the hollow cores of the pipe filled with, concrete

specified in Section 03 30 00 CAST-IN-PLACE CONCRETE having a compressive strength of 2500 psi.

3.10 INSTALLATION OF SAFETY NOSINGS

Nosing shall be completely embedded in concrete before the initial set of the concrete occurs and shall finish flush with the top of the concrete surface.

3.11 INSTALLATION OF DOWNSPOUT BOOTS

Secure downspouts to building through integral lips with appropriate fasteners.

3.12 MOUNTING OF SAFETY CHAINS

Mount safety chains 3 feet 6 inches and 2 feet above the floor.

-- End of Section --

SECTION 05 56 00

FALL ARRESTOR SYSTEM

PART 1 GENERAL

1.1 REFERENCES

The publications listed below form a part of this specification to the extent referenced. The publications are referred to in the text by basic designation only.

AMERICAN INSTITUTE OF STEEL CONSTRUCTION (AISC)

AISC 360	(2010) Specification for Structural Steel Buildings

AMERICAN NATIONAL STANDARDS INSTITUTE (ANSI)

ANSI A10.4	Requirements for Safety Belts, Harnesses, Lanyards, Lifelines, and Drop Lines for Construction and Industrial Use

ASTM INTERNATIONAL (ASTM)

ASTM A 123/A 123M	(2002) Standard Specification for Zinc (Hot-Dip Galvanized) Coatings on Iron and Steel Products
ASTM A27/A27M	(2013) Standard Specification for Steel Castings, Carbon, for General Application
ASTM A307	(2012) Standard Specification for Carbon Steel Bolts and Studs, 60 000 PSI Tensile Strength
ASTM A325	(2010; E 2013) Standard Specification for Structural Bolts, Steel, Heat Treated, 120/105 ksi Minimum Tensile Strength
ASTM A354	(2011) Standard Specification for Quenched and Tempered Alloy Steel Bolts, Studs, and Other Externally Threaded Fasteners
ASTM A36/A36M	(2012) Standard Specification for Carbon Structural Steel
ASTM A500/A500M	(2013) Standard Specification for Cold-Formed Welded and Seamless Carbon Steel Structural Tubing in Rounds and Shapes
ASTM A53/A53M	(2012) Standard Specification for Pipe, Steel, Black and Hot-Dipped, Zinc-Coated, Welded and Seamless
ASTM A 653/A 653M	(2001a) Steel Sheet, Zinc-Coated

(Galvanized) or Zinc-Iron Alloy-Coated (Galvannealed) by the Hot-Dip process

AMERICAN WELDING SOCIETY (AWS)

AWS D1.1/D1.1M	(2010; Errata 2011) Structural Welding Code - Steel

OCCUPATIONAL SAFETY AND HEALTH ADMINISTRATION (OSHA)

OSHA Title 29	Chapter XVII, Part 1910 and 1926

1.2 DESCRIPTION

The fall arrestor system shall be complete with components, attachment to support system and accessories for use above fueling truck positions. See structural drawings for system layout, and roof and crane layout details. The system shall include a fully integrated and coordinated design, furnishing and installation of the primary components, hardware and intermediate support steel (end and intermediate anchors). Supplier shall coordinate system with mechanical and electrical systems, lighting, and fire protection piping and supports. Supplier modifications to the fall arrest system due to lack of coordination shall be at no cost to the Government.

1.3 SUBMITTALS

Government approval is required for submittals with a "G" designation; submittals not having a "G" designation are for Contractor Quality Control approval. The following shall be submitted in accordance with Section 01 33 00 SUBMITTAL PROCEDURES:

SD-02 Shop Drawings

Approved Detail Drawings; G

Drawings showing the general arrangement, method of anchorage, intermediate support steel, and details of the fall arrestor system. Shop drawings and calculations for fall arrestor system and support attachment shall be sealed by a licensed structural Engineer.

SD-03 Product Data

Fall Arrestor System; G

Manufacturer's catalog data, summary of forces and loads on supporting structural system, calculations, use and maintenance requirements, descriptive literature showing material and equipment used in the system and attachment to support system.

Manufacturer's preprinted installation instructions.

SD-07 Certificates

Fall Arrestor System; G

Manufacturer shall provide certification confirming the strength of the entire system and its individual components.

SD-10 Operation and Maintenance Data

Operation and Maintenance Manuals;

Six copies of the system operation manual and system maintenance and repair manual.

1.4 QUALITY ASSURANCE

a. Submit as specified in DIVISION 1.

b. The manufacturer of the system shall be regularly engaged in manufacturing and production of fall protection systems for a minimum of five years with at least four systems installed within the last two years.

c. Installer Qualifications: Crew capable of positioning and installing fall protection system according to manufacturer's instructions.

d. All materials shall be the product of one manufacturer.

e. All materials shall be new and shall be properly stored during construction to prevent physical damage and damage from the weather.

1.5 DELIVERY, STORAGE AND HANDLING

Store and maintain products in accordance with the manufacturer's printed recommendations.

PART 2 PRODUCTS

2.1 BASIC MATERIALS

a. Structural Steel: ASTM A27/A27M, ASTM A36/A36M, or ASTM A500/A500M as applicable.

b. Threaded Rods and Bolts: ASTM A307, ASTM A325, ASTM A354 as applicable.

c. Filler Metal: AWS D1.1/D1.1M.

d. Steel Pipe: ASTM A53/A53M Grade B.

e. Galvanizing: ASTM A 123/A 123M or ASTM A 653/A 653M

2.2 FALL ARRESTOR SYSTEM

a. System shall consist of primary components of horizontal lifeline, self retracting lifeline, body harness and tagline and structural steel supports required for support of monorail lifelines and connection to the structural frame. All other hardware (snap hooks, D rings, etc.) necessary to make a safe and complete system shall be provided.

b. The system shall be designed to allow users to walk uninterrupted the entire length of each system without having to unhitch from the system to pass through intermediate support points. Each system shall be designed to support one user on each horizontal lifeline in case of a fall. The system shall be designed to allow hands-free operation once the user is properly attached to the system.

c. Lanyards, D rings, snap hooks and all other necessary hardware shall be capable of sustaining a minimum tensile load of 5,000 pounds.

d. A nylon tagline shall be provided on each system for the purpose of pulling each self retracting lifeline down to floor level for hook-up to the harness.

e. All components and hardware shall meet the requirements of ANSI A10.4 and OSHA Title 29, Chapter XVII, Part 1910 and 1926.

f. Horizontal Lifeline: Steel rail with hardware for attachment to supports.

g. Self Retracting Lifeline:

1. Self-contained, portable, stainless steel, self retracting lifeline with swiveling safety snap hooks and trolley.

2. The fall arrestor device will serve to absorb the shock of the fall and stop the fall within 2 feet of its start.

3. Centrifugal braking system.

4. Galvanized or stainless steel cable.

5. Lifeline shall be at least 2 feet greater than the distance from the pavement to point of attachment to the horizontal lifeline.

6. Lifeline shall be retractable to a minimum of 6 feet above finish floor.

h. Body Harness: Lightweight nylon full body class III harness with back D ring and tongue buckle subpelvic straps.

i. Lanyard: Web lanyard with shock absorbing pack.

j. Tagline: Nylon filament rope.

k. Intermediate support steel shall be galvanized in accordance with ASTM A 123/A 123M.

2.3 DESIGN

a. Comply with AISC 360 Manual of Steel Construction.

b. Fall arrestor system, including braces, intermediate support steel, and connections to embedments shall be designed and sealed by a registered professional engineer. Design shall be based on the configuration provided on the drawings.

c. Calculations shall be submitted to the COTR for his review. The system shall be designed for a varying walking surface elevation.

d. Each horizontal lifeline shall be designed for one (1) worker at a time, with full body harness and shock absorbing lifeline with a maximum arresting force of 900 pounds per worker.

e. The system shall be designed to be supported at locations shown on the

Contract drawings. Each anchor locations shall be designed to support at least 5,000 pounds. The system shall be designed to maintain a safety factor of at least two.

PART 3 EXECUTION

3.1 PREPARATION

a. Verify suitability of substrate to accept installation.

b. Coordinate installation of anchors support structures and with other trades.

c. Before installation, inspect all parts to insure no damaged parts are used.

3.2 FABRICATION

a. Form to shapes indicated with straight lines, sharp angles, and smooth curves.

b. Drill or punch holes for temporary field connections and attachment. Smooth edges of holes for proper securement of fasteners.

c. Make permanent shop connections with continuous fillet-type welds. Grind exposed welds smooth.

d. Conceal fastenings where practicable.

e. Shop-fabricate in as large assemblies and practicable.

f. Qualify welding processes and welding operators in accordance with AWS.

3.3 INSTALLATION

a. System shall be installed in accordance with approved detail drawings and manufacturer's instructions.

b. Set Work level, true to line, and plumb.

c. Weld field connections and grind smooth.

d. The supplier/installer of the fall arrestor system shall provide a service engineer experienced in the installation of this type of equipment who shall certify that the equipment is properly installed and operating properly.

3.4 TRAINING

Provide a training session of personnel on use and maintenance of system. Training shall consist of a single session, held at completion of installation. Furnish six (6) copies of Operation and Maintenance Manuals.

3.5 PROTECTION

a. Protect installed products until completion of project.

b. Set Work level, true to line, and plumb.

-- End of Section --

SECTION 07 11 13

BITUMINOUS DAMPPROOFING
08/11

PART 1 GENERAL

1.1 REFERENCES

The publications listed below form a part of this specification to the extent referenced. The publications are referred to within the text by the basic designation only.

ASTM INTERNATIONAL (ASTM)

ASTM D1227	(2013) Emulsified Asphalt Used as a Protective Coating for Roofing
ASTM D1668	(97a; R 2014) Glass Fabrics (Woven and Treated) for Roofing and Waterproofing
ASTM D41/D41M	(2011) Asphalt Primer Used in Roofing, Dampproofing, and Waterproofing
ASTM D4263	(1983; R 2012) Indicating Moisture in Concrete by the Plastic Sheet Method
ASTM D449/D449M	(2003; R 2014; E 2014) Asphalt Used in Dampproofing and Waterproofing

1.2 SUBMITTALS

Government approval is required for submittals with a "G" designation; submittals not having a "G" designation are for Contractor Quality Control approval. The following shall be submitted in accordance with Section 01 33 00 SUBMITTAL PROCEDURES:

SD-03 Product Data

Asphalt; G

Asphalt Primer; G

Emulsion-based asphalt; G

Protection board; G

Glass fabric; G

SD-07 Certificates

Materials

1.3 DELIVERY AND STORAGE

Deliver materials in sealed containers bearing manufacturer's original labels. Labels shall include date of manufacture, contents of each container, performance standards that apply to the contents and recommended

shelf life.

PART 2 PRODUCTS

2.1 ASPHALT

ASTM D449/D449M, Type II.

2.2 ASPHALT PRIMER

ASTM D41/D41M.

2.3 EMULSION-BASED ASPHALT DAMPPROOFING

2.3.1 Fibrated Emulsion-Based Asphalt

Fibrated emulsion-based asphalt dampproofing shall be cold-applied type conforming to ASTM D1227 Type II, Class 1, asbestos-free, manufactured of refined asphalt, emulsifiers and selected clay, fibrated with mineral fibers. For spray or brush application, emulsion shall contain a minimum of 59 percent solids by weight, 56 percent solids by volume. For trowel application, emulsion shall contain a minimum of 58 percent solids by weight, 55 percent solids by volume.

2.4 SURFACE PROTECTION

2.4.1 Protection Board

Asphaltic laminated pre-molded semi-rigid composition board with a minimum thickness of 1/8".

2.5 FABRIC REINFORCEMENT

Glass fabric, ASTM D1668 Type 1.

PART 3 EXECUTION

3.1 SURFACE PREPARATION

Remove or cut form ties and repair all surface defects as required in Section 03 30 00 CAST-IN-PLACE CONCRETE. Clean concrete and masonry surfaces to receive dampproofing of foreign matter and loose particles. Apply dampproofing to clean dry surfaces. Moisture test in accordance with ASTM D4263. If test indicates moisture, allow a minimum of 7 additional days after test completion for curing. If moisture still exists, redo test until substrate is dry.

3.1.1 Metal Surfaces

Metal surfaces shall be dry and be free of rust, scale, loose paint, oil, grease, dirt, frost and debris.

3.2 Protection of Surrounding Areas

Before starting the dampproofing work, the surrounding areas and surfaces shall be protected from spillage and migration of dampproofing material onto other work. Drains and conductors shall be protected from clogging with dampproofing material.

3.3 APPLICATION

Use either hot-application or cold-application method. Use cold-application method in confined spaces where hot bitumen would be hazardous. Apply dampproofing after priming coat is dry, but prior to any deterioration of primed surface, and when ambient temperature is above 40 degrees F. Unless indicated otherwise, extend coating 12" minimum below top of base slab. For precast concrete structures, extend coating under the base slab.

3.3.1 Surface Priming

Prime surfaces to receive asphalt or fibrous asphalt dampproofing with asphalt primer. Apply primer when ambient temperature is above 40 degrees F and at rate of approximately one gallon per 100 square feet, fully covering entire surface to be dampproofed.

3.3.2 Hot-Application Method

Apply two mop coats of hot coal-tar pitch or two mop coats of hot asphalt to surfaces. Apply mop coats uniformly using not less than 20 pounds of asphalt per 100 square feet for each coat. Do not heat asphalt above 450 degrees F. Have kettlemen in attendance at all times during heating to ensure that maximum temperature specified is not exceeded. Apply hot asphalt bitumen and fully bond to primed surface. Provide finished surface that is smooth, lustrous, and impervious to moisture. Recoat dull or porous spots.

3.3.3 Cold-Application Method

3.3.3.1 Fibrous Asphalt

Apply two coats of fibrous asphalt to surfaces to be dampproofed. Apply each coat uniformly using not less than one gallon fibrous asphalt per 50 square feet to achieve minimum coating thickness of 30 mil each. Apply first coat by brush or spray to provide full bond with primed surface. Brush or spray second coat over thoroughly dry first coat unless recommended otherwise by dampproofing materials manufacturer. Provide finished surface that is of uniform thickness and impervious to moisture. Recoat porous areas.

3.3.3.2 Emulsion-Based Asphalt

Emulsion-based asphalt dampproofing work shall not be performed in temperatures below 40 degrees F. Emulsions shall have a smooth and uniform consistency at time of application. Dampproofing materials shall be applied in two coats in accordance with manufacturer's published instructions to produce a smooth uniform dry film of not less than 30 mils each thick without voids or defects. Dull or porous spots shall be recoated. Dampproofing materials shall seal tightly around pipes and other items projecting through dampproofing. Rates of application shall be as follows:

a. Primer: 1/2 gallon per 100 square feet, cold-applied.

b. Fibrated Dampproofing: 2 gallons per 100 square feet per coat, cold-applied with spray, brush or trowel.

3.4 FABRIC REINFORCEMENT

Reinforce all edges and corners with a layer of glass fabric. Place glass fabric reinforcement in the first coat of the dampproofing compound before it thickens. Glass fabric reinforcement shall extend a minimum of 12 inches on each side of edges and corners. Lap 6 inches at splices.

3.5 PROTECTIVE COVERING

Protect dampproofed surfaces against which backfill will be placed with semi-rigid protective board.

-- End of Section --

SECTION 07 14 00

FLUID-APPLIED WATERPROOFING
02/12

PART 1 GENERAL

1.1 REFERENCES

The publications listed below form a part of this specification to the extent referenced. The publications are referred to within the text by the basic designation only.

ASTM INTERNATIONAL (ASTM)

ASTM C33/C33M	(2013) Standard Specification for Concrete Aggregates
ASTM C578	(2013) Standard Specification for Rigid, Cellular Polystyrene Thermal Insulation
ASTM C836/C836M	(2012) High Solids Content, Cold Liquid-Applied Elastomeric Waterproofing Membrane for Use With Separate Wearing Course
ASTM D1056	(2007) Standard Specification for Flexible Cellular Materials - Sponge or Expanded Rubber

1.2 SUBMITTALS

Government approval is required for submittals with a "G" designation; submittals not having a "G" designation are for Contractor Quality Control approval. The following shall be submitted in accordance with Section 01 33 00 SUBMITTAL PROCEDURES:

SD-03 Product Data

Fluid-applied membrane; G

Membrane primer; G

Elastomeric sheet; G

Flexible foam-backed elastomeric sheet; G

Solvent

Moisture meter

Protection board; G

Bond breaker

Submit material description and physical properties, application details, and recommendations regarding shelf life, application procedures, and precautions on flammability and toxicity.

SD-11 Closeout Submittals

Warranty

Information Card

Instructions To Government Personnel

Include copies of Material Safety Data Sheets for maintenance/repair materials.

1.3 PREWATERPROOFING CONFERENCE

Prior to starting application of waterproofing system, arrange and attend a prewaterproofing conference to ensure a clear understanding of drawings and specifications. Give the Contracting Officer 7 days advance written notice of the time and place of meeting. Ensure that the mechanical and electrical subcontractor, flashing and sheetmetal subcontractor, and other trades that may perform other types of work on or over the membrane after installation, attend this conference.

1.4 DELIVERY, STORAGE, AND HANDLING

Deliver waterproofing materials in manufacturer's original, unopened containers, with labels intact and legible. Containers of materials covered by a referenced specification number shall bear the specification number, type, and class of the contents. Deliver materials in sufficient quantity to continue work without interruption. Store and protect materials in accordance with manufacturer's instructions, and use within their indicated shelf life. When hazardous materials are involved, adhere to special precautions of the manufacturer, unless precautions conflict with local, state, and federal regulations. Promptly remove from the site materials or incomplete work adversely affected by exposure to moisture or freezing. Store materials on pallets and cover from top to bottom with canvas tarpaulins.

1.5 ENVIRONMENTAL CONDITIONS

Apply materials when ambient temperature is 40 degrees F or above for a period of 24 hours prior to the application and when there is no ice, frost, surface moisture, or visible dampness on the substrate surface. Apply materials when air temperature is expected to remain above 40 degrees F during the cure period recommended by the manufacturer. Moisture test for substrate is specified under paragraph entitled "Moisture Test." Work may be performed within heated enclosures, provided the surface temperature of the substrate is maintained at a minimum of 40 degrees F for 24 hours prior to the application of the waterproofing, and remains above that temperature during the cure period recommended by the manufacturer.

1.6 WARRANTY

Provide roof system material and workmanship warranties meeting specified requirements. Provide revisions or amendment to standard membrane manufacturer warranty to comply with the specified requirements. Minimum manufacturer warranty shall have no dollar limit, cover full system water-tightness, and shall have a minimum duration of 20 years.

1.6.1 Roof Membrane Manufacturer Warranty

Furnish the roof membrane manufacturer's 20-year no dollar limit roof system materials and installation workmanship warranty, including flashing, insulation, and accessories necessary for a watertight roof system construction. Write the warranty directly to the Government commencing at time of Government's acceptance of the roof work. Provide the the following statements for such warranty:

a. If within the warranty period the roof system, as installed for its intended use in the normal climatic and environmental conditions of the facility, becomes non-watertight, shows evidence of moisture intrusion within the assembly, blisters, splits, tears, cracks, delaminates, separates at the seams, or shows evidence of excessive weathering due to defective materials or installation workmanship, the repair or replacement of the defective and damaged materials of the roof system assembly and correction of defective workmanship are the responsibility of the roof membrane manufacturer. All cost associated with the repair or replacement work are the responsibility of the roof membrane manufacturer.

b. The warranty must remain in full force and effect, including emergency temporary repairs performed by others, when the manufacturer or his approved applicator fail to perform the repairs within 72 hours of notification.

1.6.2 Roofing System Installer Warranty

The roof system installer must warrant for a minimum period of two years that the roof system, as installed, is free from defects in installation workmanship, to include the roof membrane, flashing, insulation, accessories, attachments, and sheet metal installation integral to a complete watertight roof system assembly. Write the warranty directly to the Government. The roof system installer is responsible for correction of defective workmanship and replacement of damaged or affected materials. The roof system installer is responsible for all costs associated with the repair or replacement work.

1.6.3 Continuance of Warranty

Approve repair or replacement work that becomes necessary within the warranty period and accomplished in a manner so as to restore the integrity of the roof system assembly and validity of the roof membrane manufacturer warranty for the remainder of the manufacturer warranty period.

PART 2 PRODUCTS

2.1 FLUID-APPLIED MEMBRANE

ASTM C836/C836M.

2.2 MEMBRANE PRIMER

As recommended by the fluid-applied membrane manufacturer unless specifically prohibited by the manufacturer of the fluid-applied membrane.

2.3 SEALANT

As specified in Section 07 92 00 JOINT SEALANTS.

2.4 SEALANT PRIMER

As specified in Section 07 92 00 JOINT SEALANTS.

2.5 BACKING MATERIAL

Premolded, closed-cell, polyethylene, or polyurethane foam rod having a diameter 25 percent larger than joint width before being compressed into joint. Provide bond breaker of polyethylene film or other suitable material between backing material and sealant.

2.6 BOND BREAKER

As recommended by the fluid-applied membrane manufacturer. Bond breaker shall not interfere with the curing process or other performance properties of the fluid-applied membrane.

2.7 ELASTOMERIC SHEET

Preformed; as recommended by the fluid-applied membrane manufacturer. Bond strength between the fluid-applied membrane and the preformed elastomeric sheet shall be a minimum of one psi when tested in accordance with ASTM C836/C836M.

2.8 ELASTOMERIC SHEET ADHESIVE

As recommended by the elastomeric sheet manufacturer.

2.9 FLEXIBLE FOAM-BACKED ELASTOMERIC SHEET

Flexible foam-backed elastomeric sheet for protection over preformed elastomeric sheet at expansion joints shall be 1/2 inch thick, minimum, closed cell foam conforming to ASTM D1056, Type 2, Class B, Grades 2 or 3, factory-bonded to 1/16 inch thick, minimum, preformed elastomeric sheet.

2.10 PROTECTION BOARD

Premolded bitumen composition board, 1/8 inch minimum thickness or other composition board compatible with the fluid-applied membrane.

2.11 DRAINAGE COURSE AGGREGATE

ASTM C33/C33M, size No. 8.

2.12 INSULATION

Polystyrene foam conforming to ASTM C578, Class IV, thickness as required by indicated R-value.

PART 3 EXECUTION

3.1 PREPARATION

Coordinate work with that of other trades to ensure that components to be incorporated into the waterproofing system are available when needed. Inspect and approve surfaces immediately before application of waterproofing materials. Remove laitance, loose aggregate, sharp projections, grease, oil, dirt, curing compounds, and other contaminants

which could adversely affect the complete bonding of the fluid-applied membrane to the concrete surface.

3.1.1 Flashings

Make penetrations through sleeves in concrete slab watertight before application of waterproofing. After flashing is completed, cover elastomeric sheet with fluid-applied waterproofing during waterproofing application.

3.1.1.1 Drains

Make drain flanges flush with surface of structural slab. Apply a full elastomeric sheet around the drain, with edges fully adhered to drain flange and to structural slab. Do not adhere elastomeric sheet over joint between drain and concrete slab. Do not plug drainage or weep holes. Cover elastomeric sheet with fluid-applied waterproofing during waterproofing application. Lap elastomeric sheet a minimum of 4 inches onto concrete slab.

3.1.1.2 Penetrations and Projections

Flash penetrations and projections through structural slab with an elastomeric sheet adhered to the concrete slab and the penetration. Leave elastomeric sheet unadhered for one inch over joint between penetration and concrete slab. Adhere elastomeric sheet a minimum of 4 inches onto horizontal deck.

3.1.1.3 Walls and Vertical Surfaces

Flash wall intersections which are not of monolithic pour or constructed with reinforced concrete joints with an elastomeric sheet adhered to both vertical wall surfaces and concrete slab. Flash intersections which are monolithically poured or constructed with reinforced concrete joints with either an elastomeric sheet or a vertical grade of fluid-applied waterproofing adhered to vertical wall surfaces and concrete slab. Leave sheet unadhered for a distance of one inch from the corner on both vertical and horizontal surfaces.

3.1.2 Cracks and Joints

Prepare visible cracks and joints in substrate to receive fluid-applied waterproofing membrane by placing a bond breaker and an elastomeric slip sheet between membrane and substrate. Cracks that show movement shall receive a 2 inch bond breaker followed by an elastomeric sheet adhered to the deck. Nonmoving cracks shall be double coated with fluid-applied waterproofing.

3.1.3 Priming

Prime surfaces to receive fluid-applied waterproofing membrane. Apply primer as required by membrane manufacturer's printed instructions.

3.2 SPECIAL PRECAUTIONS

Protect waterproofing materials during transport and application. Do not dilute primers and other materials, unless specifically recommended by materials manufacturer. Keep containers closed except when removing contents. Do not mix remains of unlike materials. Thoroughly remove

residual materials before using application equipment for mixing and transporting materials. Do not permit equipment on the project site that has residue of materials used on previous projects. Use cleaners only for cleaning, not for thinning primers or membrane materials. Ensure that workers and others who walk on cured membrane wear clean, soft-soled shoes to avoid damaging the waterproofing materials.

3.3 APPLICATION

Over primed surfaces, provide a uniform, wet, monolithic coating of fluid-applied membrane, 60 mils thick, plus or minus 5 mils by following manufacturer's printed instructions. Apply material by trowel, squeegee, roller, brush, spray apparatus, or other method recommended by membrane manufacturer. Check wet film thickness as specified in paragraph entitled "Film Thickness" and adjust application rate as necessary to provide a uniform coating of the thickness specified. Where possible, mark off surface to be coated in equal units to facilitate proper coverage. At expansion joints, control joints, prepared cracks, flashing, and terminations, carry membrane over preformed elastomeric sheet in a uniform 60 mil thick, plus or minus 5 mils, wet thickness to provide a monolithic coating. If membrane cures before next application, wipe previously applied membrane with a solvent to remove dirt and dust that could inhibit adhesion of overlapping membrane coat. Use solvent recommended by the membrane manufacturer, as approved.

3.3.1 Work Sequence

Perform work so that protection board is installed prior to using the waterproofed surface. Do not permanently install protection board until the membrane has passed the flood test specified under paragraph entitled "Flood Test." Move material storage areas as work progresses to prevent abuse of membrane and overloading of structural deck.

3.3.2 Protection Board

Protect fluid-applied membrane by placing protection board over membrane at a time recommended by the membrane manufacturer. Protect membrane application when protection board is not placed immediately. Butt protection boards together and do not overlap.

3.3.3 Drainage Course

Place drainage course where shown after flood tests are completed and concrete protection slab or wearing course is ready to be installed.

3.3.4 Insulation

Place insulation of thickness indicated, on top of drainage course just prior to placement of concrete protection slab.

3.4 FIELD QUALITY CONTROL

3.4.1 Moisture Test

Prior to application of fluid-applied waterproofing, measure moisture content of substrate with a moisture meter in the presence of the Contracting Officer. An acceptable device is the Delmhorst Moisture Meter, Model BD7/2E/CS, Type 21 E. Similar meters by other manufacturers, which are suitable for the purpose, may be used as approved by the Contracting

Officer. Do not begin application until meter reading indicates "dry" range.

3.4.2 Film Thickness

Measure wet film thickness every 100 square feetduring application by placing flat metal plates on the substrate or using a mil-thickness gage especially manufactured for the purpose.

3.4.3 Flood Test

After application and curing is complete, plug drains and fill waterproofed area with water to a depth of 2 inches. A minimum 48 hour cure time, or longer cure time if recommended by the membrane manufacturer, shall be required prior to flood testing. Allow water to stand 24 hours. Test watertightness by measuring water level at beginning and end of the 24 hour period. If water level falls, drain water, allow installation to dry, and inspect. Make repairs or replace as required and repeat the test. Work shall not proceed before approval of repairs or replacement.

3.5 INSTRUCTIONS TO GOVERNMENT PERSONNEL

Furnish written and verbal instructions on proper maintenance procedures to designated Government personnel. Furnish instructions by a competent representative of the roof membrane manufacturer and include a minimum of 4 hours on maintenance and emergency repair of the membrane. Include a demonstration of membrane repair, and give sources of required special tools. Furnish information on safety requirements during maintenance and emergency repair operations.

3.6 INFORMATION CARD

For each roof application, furnish a minimum 8-1/2 inch by 11 inch information card for facility records and a card laminated in plastic and framed for interior display at roof access point, or a photoengraved 0.032 inch thick aluminum card for exterior display. Identify facility name and number; location; contract number; approximate roof area; detailed roof system description, including deck type, membrane, number of plies, method of application, manufacturer, insulation and cover board system and thickness; presence of tapered insulation for primary drainage, presence of vapor retarder; date of completion; installing contractor identification and contract information; membrane manufacturer warranty expiration, warranty reference number, and contact information. Install card at roof top or access location as directed by the Contracting Officer and provide a paper copy to the Contracting Officer.

FORM 1
FLUID-APPLIED WATERPROOFING SYSTEM COMPONENTS
1. Contract Number
2. Date Work Completed
3. Project Specification Designation
4. Substrate Material
5. Slope of Substrate
6. Drains Type/Manufacturer
7. Waterproofing
a. Membrane
b. Sealant
c. Elastomeric Sheet
d. Materials Manufacturer(s)
8. Protection Board
a. Type
b. Thickness
c. Manufacturer's Name
9. Drainage Course Material Graduation
10. Insulation
a. Type
b. Thickness
c. Manufacturer's Name
11. Protection Slab
a. Material
b. Thickness
c. Support
d. Joint System

FORM 1	
FLUID-APPLIED WATERPROOFING SYSTEM COMPONENTS	
12. Wearing Course	
a. Type	
b. Slope	
c. Joint System	
d. Sealant/Gasket Type	
13. Wearing Surface Type	
Manufacturer's Name	
14. Warranty	
a. Manufacturer warranty expiration	
b. Warranty reference number	
15. Statement of Compliance or Exception	
Contractor's Signature	Date Signed
Inspector's Signature	Date Signed

-- End of Section --

SECTION 07 60 00

FLASHING AND SHEET METAL
08/08

PART 1 GENERAL

1.1 REFERENCES

The publications listed below form a part of this specification to the extent referenced. The publications are referred to within the text by the basic designation only.

AMERICAN WELDING SOCIETY (AWS)

AWS D1.2/D1.2M	(2008) Structural Welding Code - Aluminum

ASTM INTERNATIONAL (ASTM)

ASTM A167	(1999; R 2009) Standard Specification for Stainless and Heat-Resisting Chromium-Nickel Steel Plate, Sheet, and Strip
ASTM A653/A653M	(2013) Standard Specification for Steel Sheet, Zinc-Coated (Galvanized) or Zinc-Iron Alloy-Coated (Galvannealed) by the Hot-Dip Process
ASTM B209	(2010) Standard Specification for Aluminum and Aluminum-Alloy Sheet and Plate
ASTM B221	(2013) Standard Specification for Aluminum and Aluminum-Alloy Extruded Bars, Rods, Wire, Profiles, and Tubes
ASTM B32	(2008) Standard Specification for Solder Metal
ASTM D41/D41M	(2011) Asphalt Primer Used in Roofing, Dampproofing, and Waterproofing
ASTM D4586/D4586M	(2007; E 2012; R 2012) Asphalt Roof Cement, Asbestos-Free

SHEET METAL AND AIR CONDITIONING CONTRACTORS' NATIONAL ASSOCIATION (SMACNA)

SMACNA 1793	(2012) Architectural Sheet Metal Manual, 7th Edition

1.2 GENERAL REQUIREMENTS

Finished sheet metalwork will form a weathertight construction without waves, warps, buckles, fastening stresses or distortion, which allows for expansion and contraction. Sheet metal mechanic is responsible for cutting, fitting, drilling, and other operations in connection with sheet metal required to accommodate the work of other trades. Coordinate

installation of sheet metal items used in conjunction with roofing with roofing work to permit continuous roofing operations.

1.3 SUBMITTALS

Government approval is required for submittals with a "G" designation; submittals not having a "G" designation are for Contractor Quality Control approval. Submit the following in accordance with Section 01 33 00 SUBMITTAL PROCEDURES:

SD-02 Shop Drawings

Covering on flat, sloped, or curved surfaces; G

Gutters; G

Downspouts; G

Fascias; G

Flashing at roof penetrations; G

Drip edge; G

Eave flashing; G

Indicate thicknesses, dimensions, fastenings and anchoring methods, expansion joints, and other provisions necessary for thermal expansion and contraction. Scaled manufacturer's catalog data may be submitted for factory fabricated items.

SD-11 Closeout Submittals

Quality Control Plan

Submit for sheet metal work in accordance with paragraph entitled "Field Quality Control."

1.4 DELIVERY, HANDLING, AND STORAGE

Package and protect materials during shipment. Uncrate and inspect materials for damage, dampness, and wet-storage stains upon delivery to the job site. Remove from the site and replace damaged materials that cannot be restored to like-new condition. Handle sheet metal items to avoid damage to surfaces, edges, and ends. Store materials in dry, weather-tight, ventilated areas until immediately before installation.

PART 2 PRODUCTS

2.1 MATERIALS

Flashing materials are limited to those specified herein. Conform to the requirements specified and to the thicknesses and configurations established in SMACNA Arch. Manual for the materials.

Furnish sheet metal items in 8 to 10 foot lengths. Single pieces less than 8 feet long may be used to connect to factory-fabricated inside and outside corners, and at ends of runs. Factory fabricate corner pieces with minimum 12 inch legs. Provide accessories and other items essential to complete

the sheet metal installation. Provide accessories made of the same or compatible materials as the items to which they are applied. Fabricate sheet metal items of the materials specified below and to the gage, thickness, or weight shown in Table I at the end of this section. Provide sheet metal items with mill finish unless specified otherwise. Where more than one material is listed for a particular item in Table I, each is acceptable and may be used except as follows:

2.1.1 Exposed Sheet Metal Items

Must be of the same material. Consider the following as exposed sheet metal: gutters, including hangers; downspouts; and eave flashings and related accessories.

2.1.2 Drainage

Do not use copper for an exposed item if drainage from that item will pass over exposed masonry, stonework or other metal surfaces.

2.1.3 Steel Sheet, Zinc-Coated (Galvanized)

ASTM A653/A653M.

2.1.3.1 Finish

Exposed exterior items of zinc-coated steel sheet must have a baked-on, factory-applied color coating of polyvinylidene fluoride or other equivalent fluorocarbon coating applied after metal substrates have been cleaned and pretreated. Provide finish coating dry-film thickness of 0.8 to 1.3 mils and color to match adjacent surface.

2.1.4 Stainless Steel

ASTM A167, Type 302 or 304, 2D Finish, fully annealed, dead-soft temper.

2.1.5 Aluminum Alloy Sheet and Plate

ASTM B209 anodized color form alloy, and temper appropriate for use.

2.1.5.1 Alclad

When fabricated of aluminum, fabricate the items Alclad 3003, Alclad 3004, Alclad 3005, clad on both sides unless otherwise indicated.

2.1.5.2 Finish

Exposed exterior sheet metal items of aluminum must have a baked-on, factory-applied color coating of polyvinylidene fluoride (PVF2) or other equivalent fluorocarbon coating applied after metal substrates have been cleaned and pretreated. Provide finish coating dry-film thickness of 0.8 to 1.3 mils and color to match adjacent surface.

2.1.6 Aluminum Alloy, Extruded Bars, Rods, Shapes, and Tubes

ASTM B221.

2.1.7 Solder

ASTM B32, 95-5 tin-antimony.

2.1.8 Bituminous Plastic Cement

ASTM D4586/D4586M, Type I.

2.1.9 Asphalt Primer

ASTM D41/D41M.

2.1.10 Fasteners

Use the same metal or a metal compatible with the item fastened. Use stainless steel fasteners to fasten dissimilar materials.

PART 3 EXECUTION

3.1 INSTALLATION

3.1.1 Workmanship

Make lines and angles sharp and true. Free exposed surfaces from visible wave, warp, buckle, and tool marks. Fold back exposed edges neatly to form a 1/2 inch hem on the concealed side. Make sheet metal exposed to the weather watertight with provisions for expansion and contraction.

Make surfaces to receive sheet metal plumb and true, clean, even, smooth, dry, and free of defects and projections. For installation of items not shown in detail or not covered by specifications conform to the applicable requirements of SMACNA 1793, Architectural Sheet Metal Manual. Provide sheet metal flashing in the angles formed where roof decks abut walls, curbs, ventilators, pipes, or other vertical surfaces and wherever indicated and necessary to make the work watertight. Join sheet metal items together as shown in Table II.

3.1.2 Nailing

Confine nailing of sheet metal generally to sheet metal having a maximum width of 18 inch. Confine nailing of flashing to one edge only. Space nails evenly not over 3 inch on center and approximately 1/2 inch from edge unless otherwise specified or indicated. Face nailing will not be permitted. Where sheet metal is applied to other than wood surfaces, include in shop drawings, the locations for sleepers and nailing strips required to secure the work.

3.1.3 Cleats

Provide cleats for sheet metal 18 inch and over in width. Space cleats evenly not over 12 inch on center unless otherwise specified or indicated. Unless otherwise specified, provide cleats of 2 inch wide by 3 inch long and of the same material and thickness as the sheet metal being installed. Secure one end of the cleat with two nails and the cleat folded back over the nailheads. Lock the other end into the seam. Pretin cleats for soldered seams.

3.1.4 Bolts, Rivets, and Screws

Install bolts, rivets, and screws where indicated or required. Provide compatible washers where required to protect surface of sheet metal and to provide a watertight connection. Provide mechanically formed joints in

aluminum sheets 0.040 inch or less in thickness.

3.1.5 Seams

Straight and uniform in width and height with no solder showing on the face.

3.1.5.1 Flat-lock Seams

Finish not less than 3/4 inch wide.

3.1.5.2 Lap Seams

Finish soldered seams not less than one inch wide. Overlap seams not soldered, not less than 3 inch.

3.1.5.3 Loose-Lock Expansion Seams

Not less than 3 inch wide; provide minimum one inch movement within the joint. Completely fill the joints with the specified sealant, applied at not less than 1/8 inch thick bed.

3.1.5.4 Flat Seams

Make seams in the direction of the flow.

3.1.6 Soldering

Where soldering is specified, apply to zinc-coated steel and stainless steel items. Pretin edges of sheet metal before soldering is begun. Seal the joints in aluminum sheets of 0.040 inch or less in thickness with specified sealants. Do not solder aluminum.

3.1.6.1 Edges

Scrape or wire-brush the edges of lead-coated material to be soldered to produce a bright surface. Flux brush the seams in before soldering. Treat with soldering acid flux the edges of stainless steel to be pretinned. Seal the joints in aluminum sheets of 0.040 inch or less in thickness with specified sealants. Do not solder aluminum.

3.1.7 Welding and Mechanical Fastening

Use welding for aluminum of thickness greater than 0.040 inch. Aluminum 0.040 inch or less in thickness must be butted and the space backed with formed flashing plate; or lock joined, mechanically fastened, and filled with sealant as recommended by the aluminum manufacturer.

3.1.7.1 Welding of Aluminum

Use welding of the inert gas, shield-arc type. For procedures, appearance and quality of welds, and the methods used in correcting welding work, conform to AWS D1.2/D1.2M.

3.1.7.2 Mechanical Fastening of Aluminum

Use No. 12, aluminum alloy, sheet metal screws or other suitable aluminum alloy or stainless steel fasteners. Drive fasteners in holes made with a No. 26 drill in securing side laps, end laps, and flashings. Space fasteners 12 inch maximum on center. Where end lap fasteners are required

to improve closure, locate the end lap fasteners not more than 2 inch from the end of the overlapping sheet.

3.1.8 Protection from Contact with Dissimilar Materials

3.1.8.1 Aluminum

Do not allow aluminum surfaces in direct contact with other metals except stainless steel, zinc, or zinc coating. Where aluminum contacts another metal, paint the dissimilar metal with a primer followed by two coats of aluminum paint. Where drainage from a dissimilar metal passes over aluminum, paint the dissimilar metal with a non-lead pigmented paint.

3.1.8.2 Metal Surfaces

Paint surfaces in contact with mortar, concrete, or other masonry materials with alkali-resistant coatings such as heavy-bodied bituminous paint.

3.1.8.3 Wood or Other Absorptive Materials

Paint surfaces that may become repeatedly wet and in contact with metal with two coats of aluminum paint or a coat of heavy-bodied bituminous paint.

3.1.9 Expansion and Contraction

Provide expansion and contraction joints at not more than 32 foot intervals for aluminum and at not more than 40 foot intervals for other metals. Provide an additional joint where the distance between the last expansion joint and the end of the continuous run is more than half the required interval. Space joints evenly. Join extruded aluminum gravel stops and fascias by expansion and contraction joints spaced not more than 12 feet apart.

3.1.10 Fascias

Prefabricate in the shapes and sizes indicated and in lengths not less that 8 feet. Provide prefabricated, mitered corners internal and external corners.

3.1.10.1 Edge Strip

Hook the lower edge of fascias at least 3/4 inch over a continuous strip of the same material bent outward at an angle not more than 45 degrees to form a drip. Where necessary, install strips over 1/16 inch thick compatible spacer or washers.

3.1.10.2 Joints

Leave open the section ends of fascias 1/4 inch and backed with a formed flashing plate, mechanically fastened in place and lapping each section end a minimum of 4 inch set laps in plastic cement. Face nailing will not be permitted. Install prefabricated aluminum fascias in accordance with the manufacturer's printed instructions and details.

3.1.11 Metal Drip Edge

Provide a metal drip edge, designed to allow water run-off to drip free of underlying construction, at eaves and rakes. Extend back from the edge of the deck not more than 3 inch and secure with compatible attachment spaced

not more than 10 inch on center along upper edge.

3.1.12 Gutters

The hung type of shape indicated and supported on underside by brackets that permit free thermal movement of the gutter. Provide gutters in sizes indicated complete with mitered corners, end caps, outlets, brackets, and other accessories necessary for installation. Bead with hemmed edge or reinforce the outer edge of gutter with a stiffening bar not less than 3/4 by 3/16 inch of material compatible with gutter. Fabricate gutters in sections not less than 8 feet. Lap the sections a minimum of one inch in the direction of flow or provide with concealed splice plate 6 inch minimum. Join the gutters, other than aluminum, by riveted and soldered joints. Join aluminum gutters with riveted sealed joints. Provide expansion-type slip joints midway between outlets. Install gutters below slope line of the roof so that snow and ice can slide clear. Support gutters on adjustable hangers spaced not more than 30 inch on center. Adjust gutters to slope uniformly to outlets, with high points occurring midway between outlets. Fabricate hangers and fastenings from metals.

3.1.13 Downspouts

Space supports for downspouts according to the manufacturer's recommendation for the steel substrate. Types, shapes and sizes are indicated. Provide complete including elbows and offsets. Provide downspouts in approximately 10 foot lengths. Provide end joints to telescope not less than 1/2 inch and lock longitudinal joints. Provide gutter outlets with wire ball strainers for each outlet. Provide strainers to fit tightly into outlets and be of the same material used for gutters. Keep downspouts not less than one inch away from columns. Fasten to the columns at top, bottom, and at an intermediate point not to exceed 5 feet on center with leader straps or concealed rack-and-pin type fasteners. Form straps and fasteners of metal compatible with the downspouts.

3.1.13.1 Terminations

Provide downspouts terminating in splash blocks with elbow-type fittings.

3.1.14 Eave Flashing

One piece in width, applied in 8 to 10 foot lengths with expansion joints spaced as specified in paragraph entitled "Expansion and Contraction." Provide a 3/4 inch continuous fold in the upper edge of the sheet to engage cleats spaced not more than 10 inch on center. Locate the upper edge of flashing not less than 18 inch from the outside face of the building, measured along the roof slope. Fold lower edge of the flashing over and loose-lock into a continuous edge strip on the fascia.

3.1.15 Sheet Metal Covering on Flat, Sloped, or Curved Surfaces

Except as specified or indicated otherwise, cover and flash all minor flat, sloped, or curved surfaces with metal sheets of the material used for flashing; maximum size of sheets, 16 by 18 inch. Fasten sheets to sheathing with metal cleats. Lock seams and solder. Lock aluminum seams as recommended by aluminum manufacturer. Provide an underlayment of roofing felt for all sheet metal covering.

3.1.16 Flashing at Roof Penetrations and Equipment Supports

Provide metal flashing for all pipes, ducts, and conduits projecting through the roof surface and for equipment supports, guy wire anchors, and similar items supported by or attached to the roof deck.

3.1.17 Single Pipe Vents

See Table I, footnote (d). Set flange of sleeve in bituminous plastic cement and nail 3 inch on center. Bend the top of sleeve over and extend down into the vent pipe a minimum of 2 inch. For long runs or long rises above the deck, where it is impractical to cover the vent pipe with lead, use a two-piece formed metal housing. Set metal housing with a metal sleeve having a 4 inch roof flange in bituminous plastic cement and nailed 3 inch on center. Extend sleeve a minimum of8 inch above the roof deck and lapped a minimum of 3 inch by a metal hood secured to the vent pipe by a draw band. Seal the area of hood in contact with vent pipe with an approved sealant.

3.2 PAINTING

Field-paint sheet metal for separation of dissimilar materials.

3.2.1 Aluminum Surfaces

Shall be solvent cleaned and given one coat of zinc-molybdate primer and one coat of aluminum paint.

3.3 CLEANING

Clean exposed sheet metal work at completion of installation. Remove grease and oil films, handling marks, contamination from steel wool, fittings and drilling debris, and scrub-clean. Free the exposed metal surfaces of dents, creases, waves, scratch marks, and solder or weld marks.

3.4 REPAIRS TO FINISH

Scratches, abrasions, and minor surface defects of finish may be repaired in accordance with the manufacturer's printed instructions and as approved. Repair damaged surfaces caused by scratches, blemishes, and variations of color and surface texture. Replace items which cannot be repaired.

3.5 FIELD QUALITY CONTROL

Establish and maintain a Quality Control Plan for sheet metal used in conjunction with roofing to assure compliance of the installed sheet metalwork with the contract requirements. Remove work that is not in compliance with the contract and replace or correct. Include quality control, but not be limited to, the following:

a. Observation of environmental conditions; number and skill level of sheet metal workers; condition of substrate.

b. Verification that specified material is provided and installed.

c. Inspection of sheet metalwork, for proper size(s) and thickness(es), fastening and joining, and proper installation.

3.5.1 Procedure

Submit for approval prior to start of roofing work. Include a checklist of points to be observed. Document the actual quality control observations and inspections. Furnish a copy of the documentation to the Contracting Officer at the end of each day.

TABLE I. SHEET METAL WEIGHTS, THICKNESSES, AND GAGES			
Sheet Metal Items	Aluminum, inch	Stainless Steel, inch	Zinc-Coated Steel, U.S. Std. Gage
Covering on minor flat, pitched or curved surfaces	.040	.018	-
Downspouts and leaders	.032	.015	24
Downspout clips and anchors	.040 clip .125 anchor	-	-
Downspout straps, 2-inch	.060	.050	-
Flashings:			
Eave	-	.015	24
Extrusions	.075	-	-
Sheets, smooth	.050	.018	24
Edge strip	.050	.025	-
Gutters:			
Gutter section	.032	.015	24
Continuous cleat	.032	.015	24
Hangers, dimensions	1 inch by .080 inch (c)	1 inch by .037 inch	-

TABLE II. SHEET METAL JOINTS			
TYPE OF JOINT			
Item Designation	Zinc-Coated Steel and Stainless Steel	Aluminum	Remarks
Flashings			
Eave	One inch flat locked, cleated. One inch loose locked, sealed expansion joint, cleated.	One inch flat locked, locked, cleated one inch loose locked, sealed expansion joints, cleated	Aluminum producer's recommended hard setting sealant for locked aluminum joints. Fill each metal expansion joint with a joint sealing compound.
Edge strip	Butt	Butt	--
Gutters	1.5 inch lap, riveted and soldered	One inch flat locked riveted and sealed	Aluminum producers recommended hard setting sealant for locked aluminum joints.
(a) Provide a 3 inch lap elastomeric flashing with manufacturer's recommended sealant.			

-- End of Section --

SECTION 07 61 14.00 20

STEEL STANDING SEAM ROOFING
05/11

PART 1 GENERAL

1.1 REFERENCES

The publications listed below form a part of this specification to the extent referenced. The publications are referred to within the text by the basic designation only.

AMERICAN IRON AND STEEL INSTITUTE (AISI)

AISI SG03-3	(2002; Suppl 2001-2004; R 2008) Cold-Formed Steel Design Manual Set

ASTM INTERNATIONAL (ASTM)

ASTM A1008/A1008M	(2013) Standard Specification for Steel, Sheet, Cold-Rolled, Carbon, Structural, High-Strength Low-Alloy and High-Strength Low-Alloy with Improved Formability, Solution Hardened, and Bake Hardened
ASTM A1011/A1011M	(2013) Standard Specification for Steel, Sheet, and Strip, Hot-Rolled, Carbon, Structural, High-Strength Low-Alloy and High-Strength Low-Alloy with Improved Formability and Ultra-High Strength
ASTM A36/A36M	(2012) Standard Specification for Carbon Structural Steel
ASTM A653/A653M	(2013) Standard Specification for Steel Sheet, Zinc-Coated (Galvanized) or Zinc-Iron Alloy-Coated (Galvannealed) by the Hot-Dip Process
ASTM A792/A792M	(2010) Standard Specification for Steel Sheet, 55% Aluminum-Zinc Alloy-Coated by the Hot-Dip Process
ASTM B117	(2011) Standard Practice for Operating Salt Spray (Fog) Apparatus
ASTM D1654	(2008) Evaluation of Painted or Coated Specimens Subjected to Corrosive Environments
ASTM D2244	(2011) Calculation of Color Tolerances and Color Differences from Instrumentally Measured Color Coordinates
ASTM D2247	(2011) Testing Water Resistance of Coatings in 100% Relative Humidity

ASTM D4214	(2007) Standard Test Method for Evaluating the Degree of Chalking of Exterior Paint Films
ASTM D522/D522M	(2014) Mandrel Bend Test of Attached Organic Coatings
ASTM D523	(2014) Standard Test Method for Specular Gloss
ASTM D714	(2002; R 2009) Evaluating Degree of Blistering of Paints
ASTM D968	(2005; R 2010) Abrasion Resistance of Organic Coatings by Falling Abrasive
ASTM E1592	(2005; R 2012) Structural Performance of Sheet Metal Roof and Siding Systems by Uniform Static Air Pressure Difference
ASTM G152	(2013) Operating Open Flame Carbon Arc Light Apparatus for Exposure of Nonmetallic Materials
ASTM G153	(2013) Operating Enclosed Carbon Arc Light Apparatus for Exposure of Nonmetallic Materials

SHEET METAL AND AIR CONDITIONING CONTRACTORS' NATIONAL ASSOCIATION (SMACNA)

SMACNA 1793	(2012) Architectural Sheet Metal Manual, 7th Edition

1.2 DEFINITIONS

1.2.1 Field-Formed Seam

Seams of panels so configured that when adjacent sheets are installed the seam is sealed utilizing mechanical or hand seamers. Crimped (45 degree bend), roll formed (180 degree bend), double roll formed (2 - 180 degree bends), and roll and lock systems are types of field-formed seam systems.

1.2.2 Pre-Formed

Formed to the final, less field-formed seam, profile and configuration in the factory.

1.2.3 Field-Formed

Formed to the final, less field-formed seam, profile and configuration at the site of work prior to installation.

1.2.4 Roofing System

The roofing system is defined as the assembly of roofing components, including roofing panels, flashing, fasteners, and accessories which, when assembled properly result in a watertight installation.

1.3 SYSTEM DESCRIPTION

1.3.1 Design Requirements

a. Panels shall be continuous lengths up to manufacturer's standard longest lengths, with no joints or seams, except where indicated or specified. Ribs of adjoining sheets shall be in continuous contact from eave to ridge.

b. There shall be no exposed or penetrating fasteners except where shown on approved shop drawings. Fasteners into steel shall be stainless steel, zinc cast head, or cadmium plated steel screws inserted into predrilled holes. There shall be a minimum of two fasteners per clip. Single fasteners will be allowed when supporting structural members are prepunched or predrilled.

c. Field-formed seam type systems shall be mechanically locked closed by the manufacturer's locking tool. The seam shall include a continuous factory applied sealant when required by the manufacturer to withstand the wind loads specified.

d. Roof panel anchor clips shall be concealed and designed to allow for longitudinal thermal movement of the panels, except where specific fixed points are indicated. Provide for lateral thermal movement in panel configuration or with clips designed for lateral and longitudinal movement.

1.3.2 Design Conditions

The system shall be designed to resist positive and negative loads specified herein in accordance with the AISI SG03-3. Panels shall support walking loads without permanent distortion or telegraphing of the structural supports.

1.3.2.1 Wind Uplift

Roof system and attachments shall resist the wind loadsindicated on the wind diagrams in the structural drawings.

The design uplift force for each connection assembly shall be that pressure given for the area under consideration, multiplied by the tributary load area of the connection assembly, and multiplied by the appropriate factor of safety, as follows:

a. Single fastener in a connection: 3.0

b. Two or more fasteners in each connection: 2.25

1.3.2.2 Roof Live Loads

Loads shall be applied on the horizontal projection of the roof structure. The minimum roof design live load shall be 20 psf.

1.3.2.3 Thermal Movement

System shall be capable of withstanding thermal movement based on a temperature range of 10 degrees F and 140 degrees F.

1.3.2.4 Deflection

Panels shall be capable of supporting design loads between unsupported spans with deflection of not greater than L/180 of the span.

1.3.3 Structural Performance

The structural performance test methods and requirements of the Standing Seam Roofing Systems (SSRS) shall be in accordance with ASTM E1592.

1.4 SUBMITTALS

Government approval is required for submittals with a "G" designation; submittals not having a "G" designation are for Contractor Quality Control approval. The following shall be submitted in accordance with Section 01 33 00 SUBMITTAL PROCEDURES:

SD-02 Shop Drawings

Roofing; G

Submit roofing drawings to supplement the instructions and diagrams. Drawings shall include design and erection drawings containing an isometric view of the roof showing the design uplift pressures and dimensions of edge, ridge and corner zones; and show typical and special conditions including flashings, materials and thickness, dimensions, fixing lines, anchoring methods, sealant locations, sealant tape locations, fastener layout, sizes, and spacing, terminations, penetrations, attachments, and provisions for thermal movement. Details of installation shall be in accordance with the manufacturer's Standard Instructions and details or the SMACNA 1793. Prior to submitting shop drawings, have drawings reviewed and approved by the manufacturer's technical engineering department.

SD-03 Product Data

Roofing panels; G

Attachment clips

Closures

Accessories

Fasteners

Sealants

Sample warranty certificate; G

Submit for materials to be provided. Submit data sufficient to indicate conformance to specified requirements.

SD-04 Samples

Roofing panel

Submit a 12 inch long by full width section of typical panel.

For color selection, submit 2 by 4 inch metal samples in color, finish and texture. When colors are not indicated, submit samples of not less than six different manufacturer's standard colors for selection.

Intermediate Support Section

Submit full size samples of each intermediate support section, 12 inches long.

SD-05 Design Data

Design calculations

SD-06 Test Reports

Field Inspection; G

Submit manufacturer's technical representative's field inspection reports as specified in paragraph entitled "Manufacturer's Field Inspection."

Structural performance tests

Finish tests

SD-07 Certificates

Manufacturer's Technical Representative's Qualifications

Statement of Installer's Qualifications

Submit documentation from roofing manufacturer proving the manufacturer's technical representative meets below specified requirements. Include name, address, telephone number, and experience record.

Submit documentation proving the installer is factory-trained, has the specified experience, and authorized by the manufacturer to install the products specified.

Coil stock compatibility; G

Provide certification of coil compatibility with roll forming machinery to be used for forming panels without warping, waviness, and rippling not part of panel profile; to be done without damage, abrasion or marking of finish coating.

SD-08 Manufacturer's Instructions

Installation manual; G

Submit manufacturers printed installation manual, instructions, and standard details.

SD-11 Closeout Submittals

Information card

For each roofing installation, submit a typewritten card containing the information listed on Form 1 located at the end of this section.

1.5 DESIGN CALCULATIONS

Provide design calculations prepared by a professional engineer specializing in structural engineering verifying that system supplied and any additional framing meets design load criteria indicated. Coordinate calculations with manufacturer's test results. Include calculations for:

Wind load uplift design pressure at roof locations specified in paragraph entitled "Wind Uplift."

Clip spacing and allowable load per clip.

Fastening of clips to structure or intermediate supports.

Intermediate support spacing and framing and fastening to structure when required.

Allowable panel span at anchorage spacing indicated.

Safety factor used in design loading.

Governing code requirements or criteria.

Edge and termination details.

1.6 QUALITY ASSURANCE

1.6.1 Preroofing Conference

After submittals are received and approved but before roofing work, including associated work, is preformed, the Contractor shall hold a preroofing conference to review the following:

a. The drawings and specifications

b. Procedure for on site inspection and acceptance of the roofing substrate and pertinent structural details relating to the roofing system

c. Contractor's plan for coordination of the work of the various trades involved in providing the roofing system and other components secured to the roofing

d. Safety requirements

The preroofing conference shall be attended by the Contractor and personnel directly responsible for the roofing installation and the roofing manufacturer's technical representative. Conflicts among those attending the preroofing conference shall be resolved and confirmed in writing before roofing work, including associated work, is begun. Prepare written minutes of the preroofing conference and submit to the Contracting Officer.

1.6.2 Manufacturer

The SSMRS shall be the product of a metal roofing industry - recognized manufacturer who has been in the practice of manufacturing SSMRS for a period of not less than 5 years and who has been involved in at least 5 projects similar in size and complexity to this project.

1.6.3 Manufacturer's Technical Representative

The representative shall have authorization from manufacturer to approve field changes and be thoroughly familiar with the products and with installations in the geographical area where construction will take place. The manufacturer's representative shall be an employee of the manufacturer with at least 5 years of experience in installing the roof system. The representative shall be available to perform field inspections and attend meetings as required herein, and as requested by the Contracting Officer.

1.6.4 Installer's Qualifications

The roofing system installer shall be factory-trained, approved by the metal roofing system manufacturer to install the system, and shall have a minimum of three years of experience as an approved applicator with that manufacturer. The applicator shall have applied five installations of similar size and scope as this project within the previous 3 years.

1.6.5 Single Source

Roofing panels, clips, closures, and other accessories shall be standard products of the same manufacturer; shall be the latest design by the manufacturer; and shall have been designed by the manufacturer to operate as a complete system for the intended use.

1.6.6 Laboratory Tests For Panel Finish

The term "appearance of base metal" refers to the metal coating on steel. Panels shall meet the following test requirements:

a. Formability Test: When subjected to a 180 degree bend over a 1/8 inch diameter mandrel in accordance with ASTM D522/D522M, exterior coating film shall show only slight microchecking and no loss of adhesion.

b. Accelerated Weathering Test: Withstand a weathering test for a minimum of 2000 hours in accordance with ASTM G152 and ASTM G153, Method 1 without cracking, peeling, blistering, loss of adhesion of the protective coating, or corrosion of the base metal. Protective coating that can be readily removed from the base metal with a penknife blade or similar instrument shall be considered to indicate loss of adhesion.

c. Chalking Resistance: After the 2000-hour weatherometer test, exterior coating shall not chalk greater than No. 8 rating when measured in accordance with ASTM D4214 test procedures.

d. Color Change Test:

After the 2000-hour weatherometer test, exterior coating color change shall not exceed 2 NBS units when measured in accordance with ASTM D2244 test procedure.

e. Salt Spray Test: Withstand a salt spray test for a minimum of 1000

hours in accordance with ASTM B117, including the scribe requirement in the test. Immediately upon removal of the panel from the test, the coating shall receive a rating of 10, no blisters in field as determined by ASTM D714; and an average rating of 7, 1/16 inch failure at scribe, as determined by ASTM D1654. Rating Schedule No. 1.

f. Abrasion Resistance Test for Color Coating: When subjected to the falling sand test in accordance with ASTM D968, coating system shall withstand a minimum of 100 liters of sand per mil thickness before appearance of base metal.

g. Humidity Test: When subjected to a humidity cabinet test in accordance with ASTM D2247 for 1000 hours, a scored panel shall show no signs of blistering, cracking, creepage, or corrosion.

h. Gloss Test: The gloss of the finish shall be 30 plus or minus 5 at an angle of 60 degrees, when measured in accordance with ASTM D523.

1.7 WARRANTY

Furnish manufacturer's no-dollar-limit materials and workmanship warranty for the roofing system. The warranty period shall be not less than 20 years from the date of Government acceptance of the work. The warranty shall be issued directly to the Government. The warranty shall provide that if within the warranty period the metal roofing system becomes non-watertight or shows evidence of corrosion, perforation, rupture or excess weathering due to deterioration of the roofing system resulting from defective materials or installed workmanship the repair or replacement of the defective materials and correction of the defective workmanship shall be the responsibility of the roofing system manufacturer. Repairs that become necessary because of defective materials and workmanship while roofing is under warranty shall be performed within 7 days after notification, unless additional time is approved by the Contracting Officer. Failure to perform repairs within the specified period of time will constitute grounds for having the repairs performed by others and the cost billed to the manufacturer. The Contractor shall also provide a 2 year contractor installation warranty.

1.8 DELIVERY, STORAGE AND HANDLING

Deliver, store, and handle preformed panels, bulk roofing products and other manufactured items in a manner to prevent damage or deformation.

1.8.1 Delivery

Provide adequate packaging to protect materials during shipment. Crated materials shall not be uncrated until ready for use, except for inspection. Immediately upon arrival of materials at the jobsite, inspect materials for damage, dampness, and staining. Damaged or permanently stained materials that cannot be restored to like-new condition shall be replaced with satisfactory material. If materials are wet, remove the moisture and re-stack and protect the panels until used.

1.8.2 Storage

Stack materials on platforms or pallets and cover with tarpaulins or other suitable weathertight covering which prevents water trapping or condensation. Store materials so that water which might have accumulated during transit or storage will drain off. Do not store the panels in

contact with materials that might cause staining, such as mud, lime, cement, fresh concrete or chemicals. Protect stored panels from wind damage.

1.8.3 Handling

Handle material carefully to avoid damage to surfaces, edges and ends.

PART 2 PRODUCTS

2.1 ROOFING PANELS

Panels shall have interlocking ribs for securing adjacent sheets. System for securing the roof covering to structural framing members shall be concealed clip fastening system with no fasteners penetrating the panels except at the ridge or eave, rakes, penetrations, and end laps. Backing plates and ends of panels at end laps shall be predrilled or prepunched; factory prepare ends of panels to be lapped by trimming part of seam, die-setting or swaging ends of panels. Length of sheets shall be sufficient to cover the entire length of any unbroken roof slope when such slope is 30 feet or less. When length of run exceeds 30 feet, each sheet in the run shall extend over two or more spans. Sheets longer than 30 feet may be furnished if approved by the Contracting Officer. Width of sheets shall provide not less than 12 inches of coverage in place. Height of corrugations of adjacent roof sheets shall be not less than 3.0 inches (nominal). Make provisions for expansion and contraction at either ridge or eave, consistent with the type of system to be used. Panels from coil stock shall be formed without warping, waviness or ripples not part of the panel profile and shall be free of damage to the finish coating system.

2.1.1 Material

Zinc-coated steel conforming to ASTM A653/A653M, G90coating designation or aluminum-zinc alloy coated steel conforming to ASTM A792/A792M, AZ 55 coating. Minimum thickness to be 0.023 inch thick (24 gage) minimum except when mid field of roof is subject to design wind uplift pressures of 60 psf or greater, entire roof system shall have a minimum thickness of 0.030 inch (22 gage).

2.1.2 Texture

Smooth.

2.1.3 Finish

Factory color finish.

2.1.3.1 Factory Color Finish

Provide factory applied, thermally cured coating to exterior and interior of metal roof panels and metal accessories. Provide exterior finish top coat of 70 percent resin polyvinylidene fluoride with not less than 0.8 mil dry film thickness. Provide exterior primer standard with panel manufacturer with not less than 0.8 mil dry film thickness. Interior finish shall consist of 0.2 mil dry film thickness prime coat 0.5 mil dry film thickness backer coat. Provide exterior and interior coating meeting test requirements specified below. Tests shall have been performed on the same factory finish and thickness provided.

2.2 INTERMEDIATE SUPPORTS

Fabricate panel subgirts, subpurlins, T-bars, Z-bars and tracks from galvanized steel conforming to ASTM A653/A653M, G90, Grade D (16 gage and heavier), Grade A (18 gage and lighter); or steel conforming to ASTM A36/A36M, ASTM A1011/A1011M , or ASTM A1008/A1008M prime painted with zinc-rich primer. Size, shape, thickness and capacity as required to meet the load and deflection criteria specified.

2.3 ATTACHMENT CLIPS

Fabricate clips from ASTM A1011/A1011M, or ASTM A1008/A1008M steel hot-dip galvanized in accordance with ASTM A653/A653M, G 90, or Series 300 stainless steel. Size, shape, thickness and capacity as required to meet the load and deflection criteria specified.

2.4 ACCESSORIES

Sheet metal flashings, gutters, downspouts, trim, moldings, closure strips, caps, and other similar sheet metal accessories used in conjunction with preformed metal panels shall be of the same material as used for the panels. Provide metal accessories with a factory color finish to match the roofing panels, except that such items which will be concealed after installation may be provided without the finish if they are stainless steel. Metal shall be of a thickness not less than that used for the panels. Thermal spacer blocks and other thermal barriers at concealed clip fasteners shall be as recommended by the manufacturer except that wood spacer blocks are not allowed.

2.4.1 Closures

2.4.1.1 Rib Closures

Corrosion resisting steel, closed-cell or solid-cell synthetic rubber, neoprene or polyvinyl chloride pre-molded to match configuration of rib opening. Material for closures shall not absorb water.

2.4.1.2 Ridge Closures

Metal-clad foam or metal closure with foam secondary closure matching panel configuration for installation on surface of roof panel between panel ribs at ridge and headwall roof panel flashing conditions and terminations. Foam material shall not absorb water.

2.4.2 Fasteners

Zinc-coated steel, corrosion resisting steel, zinc cast head, or nylon capped steel, type and size specified below or as otherwise approved for the applicable requirements. Design the fastening system to withstand the design loads specified. Exposed fasteners shall be gasketed or have gasketed washers on the exterior side of the covering to waterproof the penetration. Washer material shall be compatible with the covering; have a minimum diameter of 3/8 inch for structural connections; and gasketed portion of fasteners or washers shall be neoprene or other equally durable elastomeric material approximately 1/8 inch thick.

2.4.2.1 Screws

Not smaller than No. 14 diameter if self-tapping type and not smaller than

No. 12 diameter if self-drilling and self-tapping.

2.4.2.2 Bolts

Not smaller than 1/4 inch diameter, shouldered or plain shank as required, with proper nuts.

2.4.2.3 Automatic End-Welded Studs

Automatic end-welded studs shall be shouldered type with a shank diameter of not smaller than 3/16 inch and cap or nut for holding covering against the shoulder.

2.4.2.4 Explosive Driven Fasteners

Fasteners for use with explosive actuated tools shall have a shank diameter of not smaller than 0.145 inch with a shank length of not smaller than 1/2 inch for fastening to steel and not smaller than one inch for fastening to concrete.

2.4.2.5 Rivets

Blind rivets shall be stainless steel with 1/8 inch nominal diameter shank. Rivets shall be threaded stem type if used for other than the fastening of trim. Rivets with hollow stems shall have closed ends.

2.4.3 Sealants

Elastomeric type containing no oil or asphalt. Exposed sealant shall cure to a rubberlike consistency. Concealed sealant shall be the non-hardening type. Seam sealant shall be factory-applied, non-skinning, non-drying, and shall conform to the roofing manufacturer's recommendations. Silicone-based sealants shall not be used in contact with finished metal panels and components unless approved otherwise by the Contracting Officer.

2.4.4 GASKETS AND INSULATING COMPOUNDS

Nonabsorptive and suitable for insulating contact points of incompatible materials. Insulating compounds shall be nonrunning after drying.

PART 3 EXECUTION

3.1 EXAMINATION

Examine surfaces to receive standing seam metal roofing and flashing. Ensure that surfaces are plumb and true, clean, even, smooth, as dry and free from defects and projections which might affect the installation.

3.2 INSTALLATION

Install in accordance with the approved manufacturer's erection instructions, shop drawings, and diagrams. Panels shall be in full and firm contact with attachment clips. Where prefinished panels are cut in the field, or where any of the factory applied coverings or coatings are abraded or damaged in handling or installation, they shall, after necessary repairs have been made with material of the same color as the weather coating, be approved before being installed. Seal completely openings through panels. Correct defects or errors in the materials. Replace materials which cannot be corrected in an approved manner with nondefective

materials. Provide molded closure strips where indicated and where necessary to provide weathertight construction. Use shims as required to ensure attachment clip line is true. Use a spacing gage at each row of panels to ensure that panel width is not stretched or shortened.

3.2.1 Roof Panels

Apply roofing panels with the standing seams parallel to the slope of the roof. Provide roofing panels in longest practical lengths from ridge to eaves (top to eaves on shed roofs), with no transverse joints except at the junction of ventilators and similar openings. Install flashing to assure positive water drainage away from roof penetrations. Locate panel end laps such that fasteners do not engage supports or otherwise restrain the longitudinal thermal movement of panels. Form field-formed seam type system seams in the field with an automatic mechanical seamer approved by the manufacturer. Attach panels to the structure with concealed clips incorporated into panel seams. Clip attachment shall allow roof to move independently of the structure, except at fixed points as indicated.

3.2.2 Flashings

Provide flashing, related closures and accessories as indicated and as necessary to provide a weathertight installation. Install flashing to ensure positive water drainage away from roof penetrations. Flash and seal the roof at the ridge, eaves and rakes, and projections through the roof. Place closure strips, flashing, and sealing material in an approved manner that will assure complete weathertightness. Details of installation which are not indicated shall be in accordance with the SMACNA 1793, panel manufacturer's approved printed instructions and details, or the approved shop drawings. Allow for expansion and contraction of flashing.

3.2.3 Flashing Fasteners

Fastener spacings shall be in accordance with the panel manufacturer's recommendations and as necessary to withstand the design loads indicated. Install fasteners in straight lines within a tolerance of 1/2 inch in the length of a bay. Drive exposed penetrating type fasteners normal to the surface and to a uniform depth to seat gasketed washers properly and drive so as not to damage factory applied coating. Exercise extreme care in drilling pilot holes for fastenings to keep drills perpendicular and centered. Do not drill through sealant tape. After drilling, remove metal filings and burrs from holes prior to installing fasteners and washers. Torque used in applying fasteners shall not exceed that recommended by the manufacturer. Remove panels deformed or otherwise damaged by over-torqued fastenings, and provide new panels.

3.2.4 Rib and Ridge Closure/Closure Strips

Set closure/closure strips in joint sealant material and apply sealant to mating surfaces prior to adding panel.

3.3 PROTECTION OF APPLIED ROOFING

Do not permit storing, walking, wheeling, and trucking directly on applied roofing materials. Provide temporary walkways, runways, and platforms of smooth clean boards or planks as necessary to avoid damage to applied roofing materials, and to distribute weight to conform to indicated live load limits of roof construction.

3.4 CLEANING

Clean exposed sheet metal work at completion of installation. Remove metal shavings, filings, nails, bolts, and wires from roofs. Remove grease and oil films, excess sealants, handling marks, contamination from steel wool, fittings and drilling debris and scrub the work clean. Exposed metal surfaces shall be free of dents, creases, waves, scratch marks, solder or weld marks and damage to the finish coating.

3.5 MANUFACTURER'S FIELD INSPECTION

Manufacturer's technical representative shall visit the site as necessary during the installation process to assure panels, flashings, and other components are being installed in a satisfactory manner. Manufacturer's technical representative shall perform a field inspection during the first 20 squares of roof panel installation and at substantial completion prior to issuance of warranty, as a minimum, and as otherwise requested by the Contracting Officer. Additional inspections shall not exceed one for 100 squares of total roof area with the exception that follow-up inspections of previously noted deficiencies or application errors shall be performed as requested by the Contracting Officer. Each inspection visit shall include a review of the entire installation to date. After each inspection, a report, signed by the manufacturer's technical representative, shall be submitted to the Contracting Officer noting the overall quality of work, deficiencies and any other concerns, and recommended corrective actions in detail. Notify Contracting Officer a minimum of 2 working days prior to site visit by manufacturer's technical representative.

3.6 COMPLETED WORK

Completed work shall be plumb and true without oil canning, dents, ripples, abrasion, rust, staining, or other damage detrimental to the performance or aesthetics of the completed roof assembly.

3.7 INFORMATION CARD

For each roof, provide a roofing information card. Card to be 8 1/2 by 11 inches minimum and contain the information listed on Form 1 at end of this section. Send a photostatic paper copy to LANTNAVFACENGCOM, Code 1613, 1510 Gilbert Street, Norfolk, VA 23511-2699.

3.8 FORM ONE

FORM 1 - PREFORMED STEEL STANDING SEAM ROOFING SYSTEM COMPONENTS

1. Contract Number:

2. Building Number & Location:

3. NAVFAC Specification Number:

4. Deck/Substrate Type:

5. Slopes of Deck/Roof Structure:

6. Insulation Type & Thickness:

7. Insulation Manufacturer:

8. Vapor Retarder: ( )Yes ( )No

9. Vapor Retarder Type:

10. Preformed Steel Standing Seam Roofing Description:

a. Manufacturer (Name, Address, & Phone No.):
b. Product Name: c. Width: d. Gage:
e. Base Metal: f. Method of Attachment:

11. Repair of Color Coating:

a. Coating Manufacturer (Name, Address & Phone No.):
b. Product Name:
c. Surface Preparation:
d. Recoating Formula:
e. Application Method:

12. Statement of Compliance or Exception:_____
_____
_____

13. Date Roof Completed:

14. Warranty Period: From_____ To_____

15. Roofing Contractor (Name & Address):

16. Prime Contractor (Name & Address):

Contractor's Signature _____ Date:

Inspector's Signature _____ Date:

-- End of Section --

SECTION 07 92 00

JOINT SEALANTS
01/07

PART 1 GENERAL

1.1 REFERENCES

The publications listed below form a part of this specification to the extent referenced. The publications are referred to within the text by the basic designation only.

ASTM INTERNATIONAL (ASTM)

ASTM C1311	(2010) Standard Specification for Solvent Release Agents
ASTM C509	(2006; R 2011) Elastomeric Cellular Preformed Gasket and Sealing Material
ASTM C734	(2006; R 2012) Low-Temperature Flexibility of Latex Sealants After Artificial Weathering
ASTM C834	(2010) Latex Sealants
ASTM C919	(2012) Use of Sealants in Acoustical Applications
ASTM C920	(2011) Standard Specification for Elastomeric Joint Sealants
ASTM D1056	(2007) Standard Specification for Flexible Cellular Materials - Sponge or Expanded Rubber
ASTM D217	(2010) Cone Penetration of Lubricating Grease
ASTM E84	(2013a) Standard Test Method for Surface Burning Characteristics of Building Materials

1.2 SUBMITTALS

Government approval is required for submittals with a "G" designation; submittals not having a "G" designation are for Contractor Quality Control approval. Submit the following in accordance with Section 01 33 00 SUBMITTAL PROCEDURES:

SD-03 Product Data

Sealants

Primers

Bond breakers

Backstops

Manufacturer's descriptive data including storage requirements, shelf life, curing time, instructions for mixing and application, and primer data (if required). Provide a copy of the Material Safety Data Sheet for each solvent, primer or sealant material.

SD-07 Certificates

Sealant

Certificates of compliance stating that the materials conform to the specified requirements.

1.3 ENVIRONMENTAL CONDITIONS

Apply sealant when the ambient temperature is between 40 and 90 degrees F.

1.4 DELIVERY AND STORAGE

Deliver materials to the job site in unopened manufacturers' external shipping containers, with brand names, date of manufacture, color, and material designation clearly marked thereon. Label elastomeric sealant containers to identify type, class, grade, and use. Carefully handle and store materials to prevent inclusion of foreign materials or subjection to sustained temperatures exceeding 90 degrees F or less than 0 degrees F.

1.5 QUALITY ASSURANCE

1.5.1 Compatibility with Substrate

Verify that each of the sealants are compatible for use with joint substrates.

1.5.2 Joint Tolerance

Provide joint tolerances in accordance with manufacturer's printed instructions.

1.6 SPECIAL WARRANTY

Guarantee sealant joint against failure of sealant and against water penetration through each sealed joint for five years.

PART 2 PRODUCTS

2.1 SEALANTS

Provide sealant that has been tested and found suitable for the substrates to which it will be applied.

2.1.1 Interior Sealant

Provide ASTM C834 ASTM C920, Type S or M, Grade NS, Class 12.5, Use NT. Location(s) and color(s) of sealant for the following:

LOCATION	COLOR
a. Small voids between walls or partitions and adjacent door frames, work surfaces, built-in or surface-mounted equipment and fixtures, and similar items.	Match adjacent surface color.
b. Joints of interior partitions which adjoin exterior walls unless otherwise detailed.	Match adjacent surface color.
c. Interior locations, not otherwise indicated or specified, where small voids exist between materials specified to be painted.	Match adjacent surface color.

2.1.2 Exterior Sealant

For joints in vertical surfaces, provide ASTM C920, Type S or M, Grade NS, Class 25, Use NT. For joints in horizontal surfaces, provide ASTM C920, Type S or M, Grade P, Class 25, Use T. Provide location(s) and color(s) of sealant as follows:

LOCATION	COLOR
a. Joints and recesses formed where frames and subsills of windows and doors adjoin metal frames. Use sealant at both exterior and interior surfaces of exterior wall penetrations.	Match adjacent surface color.
b. Expansion and control joints.	Match adjacent surface color.
c. Voids where items pass through exterior walls.	Match adjacent surface color.
d. Metal-to-metal joints where sealant is indicated or specified.	Match adjacent surface color.
e. Joints between ends of gravel stops, fascias, copings, and adjacent walls.	Match adjacent surface color.

2.1.3 Floor Joint Sealant

ASTM C920, Type S or M, Grade P, Class 25, Use T. Provide location(s) and

color(s) of sealant as follows:

LOCATION	COLOR
a. Seats of metal thresholds for exterior doors.	Gray

2.1.4 Acoustical Sealant

Rubber or polymer-based acoustical sealant conforming to ASTM C919 must have a flame spread of 25 or less and a smoke developed rating of 50 or less when tested in accordance with ASTM E84. Acoustical sealant must have a consistency of 250 to 310 when tested in accordance with ASTM D217, and must remain flexible and adhesive after 500 hours of accelerated weathering as specified in ASTM C734, and must be non-staining.

2.2 PRIMERS

Provide a nonstaining, quick-drying type and consistency recommended by the sealant manufacturer for the particular application.

2.3 BOND BREAKERS

Provide the type and consistency recommended by the sealant manufacturer to prevent adhesion of the sealant to backing or to bottom of the joint.

2.4 BACKSTOPS

Provide glass fiber roving or neoprene, butyl, polyurethane, or polyethylene foams free from oil or other staining elements as recommended by sealant manufacturer. Provide 25 to 33 percent oversized backing for closed cell and 40 to 50 percent oversized backing for open cell material, unless otherwise indicated. Make backstop material compatible with sealant. Do not use oakum and other types of absorptive materials as backstops.

2.4.1 Synthetic Rubber

Conform to ASTM C509, Option I, Type I preformed rods or tubes for Synthetic rubber backing.

2.4.2 Neoprene

Conform to ASTM D1056, closed cell expanded neoprene cord Type 2, Class C, Grade 2C2 for Neoprene backing.

2.4.3 Butyl Rubber Based

Provide Butyl Rubber Based Sealants of single component, solvent release, color as selected, conforming to ASTM C1311.

2.4.4 Silicon Rubber Base

Provide Silicon Rubber Based Sealants of single component, solvent release, color as selected, conforming to ASTM C920, Non-sag.

2.5 CLEANING SOLVENTS

Provide type(s) recommended by the sealant manufacturer except for aluminum that will be in contact with sealant.

PART 3 EXECUTION

3.1 SURFACE PREPARATION

Clean surfaces from dirt frost, moisture, grease, oil, wax, lacquer, paint, or other foreign matter that would tend to destroy or impair adhesion. Remove oil and grease with solvent. Surfaces must be wiped dry with clean cloths. For surface types not listed below, contact sealant manufacturer for specific recommendations.

3.1.1 Steel Surfaces

Remove loose mill scale by sandblasting or, if sandblasting is impractical or would damage finish work, scraping and wire brushing. Remove protective coatings by sandblasting or using a residue-free solvent.

3.1.2 Aluminum Surfaces

Remove temporary protective coatings from surfaces that will be in contact with sealant. When masking tape is used as a protective coating, remove tape and any residual adhesive just prior to sealant application. For removing protective coatings and final cleaning, use nonstaining solvents recommended by the manufacturer of the item(s) containing aluminum or surfaces.

3.1.3 Concrete Surfaces

Where surfaces have been treated with curing compounds, oil, or other such materials, remove materials by sandblasting or wire brushing. Remove laitance, efflorescence and loose mortar from the joint cavity.

3.2 SEALANT PREPARATION

Do not add liquids, solvents, or powders to the sealant. Mix multicomponent elastomeric sealants in accordance with manufacturer's instructions.

3.3 APPLICATION

3.3.1 Joint Width-To-Depth Ratios

a. Acceptable Ratios:

JOINT WIDTH	JOINT DEPTH	
	Minimum	Maximum
For metal, glass, or other nonporous surfaces:		
1/4 inch (minimum)	1/4 inch	1/4 inch
over 1/4 inch	1/2 of width	Equal to width

JOINT WIDTH	JOINT DEPTH	
	Minimum	Maximum
For concrete:		
1/4 inch (minimum)	1/4 inch	1/4 inch
over 1/4 inch to 1/2 inch	1/4 inch	Equal to width
over 1/2 inch to 2 inch	1/2 inch	5/8 inch
Over 2 inch	As recommended by sealant manufacturer	

b. Unacceptable Ratios: Where joints of acceptable width-to-depth ratios have not been provided, clean out joints to acceptable depths and grind or cut to acceptable widths without damage to the adjoining work. Grinding is not required on metal surfaces.

3.3.2 Masking Tape

Place masking tape on the finish surface on one or both sides of a joint cavity to protect adjacent finish surfaces from primer or sealant smears. Remove masking tape within 10 minutes after joint has been filled and tooled.

3.3.3 Backstops

Install backstops dry and free of tears or holes. Tightly pack the back or bottom of joint cavities with backstop material to provide a joint of the depth specified. Install backstops in the following locations:

a. Where indicated.

b. Where backstop is not indicated but joint cavities exceed the acceptable maximum depths specified in paragraph entitled, "Joint Width-to-Depth Ratios".

3.3.4 Primer

Immediately prior to application of the sealant, clean out loose particles from joints. Where recommended by sealant manufacturer, apply primer to joints in concrete masonry units, wood, and other porous surfaces in accordance with sealant manufacturer's instructions. Do not apply primer to exposed finish surfaces.

3.3.5 Bond Breaker

Provide bond breakers to the back or bottom of joint cavities, as recommended by the sealant manufacturer for each type of joint and sealant used, to prevent sealant from adhering to these surfaces. Carefully apply the bond breaker to avoid contamination of adjoining surfaces or breaking bond with surfaces other than those covered by the bond breaker.

3.3.6 Sealants

Provide a sealant compatible with the material(s) to which it is applied. Do not use a sealant that has exceeded shelf life or has jelled and can not

be discharged in a continuous flow from the gun. Apply the sealant in accordance with the manufacturer's printed instructions with a gun having a nozzle that fits the joint width. Force sealant into joints to fill the joints solidly without air pockets. Tool sealant after application to ensure adhesion. Make sealant uniformly smooth and free of wrinkles. Upon completion of sealant application, roughen partially filled or unfilled joints, apply sealant, and tool smooth as specified. Apply sealer over the sealant when and as specified by the sealant manufacturer.

3.4 PROTECTION AND CLEANING

3.4.1 Protection

Protect areas adjacent to joints from sealant smears. Masking tape may be used for this purpose if removed 5 to 10 minutes after the joint is filled.

3.4.2 Final Cleaning

Upon completion of sealant application, remove remaining smears and stains and leave the work in a clean and neat condition.

a. Porous Surfaces: Immediately scrape off fresh sealant that has been smeared on porous surfaces and rub clean with a solvent as recommended by the sealant manufacturer. Allow excess sealant to cure for 24 hour then remove by wire brushing or sanding.

b. Metal and Other Non-Porous Surfaces: Remove excess sealant with a solvent-moistened cloth.

-- End of Section --

SECTION 09 90 00

PAINTS AND COATINGS
05/11

PART 1 GENERAL

1.1 REFERENCES

The publications listed below form a part of this specification to the extent referenced. The publications are referred to within the text by the basic designation only.

AMERICAN CONFERENCE OF GOVERNMENTAL INDUSTRIAL HYGIENISTS (ACGIH)

ACGIH 0100	(2001; Supplements 2002-2008) Documentation of the Threshold Limit Values and Biological Exposure Indices

ASTM INTERNATIONAL (ASTM)

ASTM D235	(2002; R 2012) Mineral Spirits (Petroleum Spirits) (Hydrocarbon Dry Cleaning Solvent)
ASTM D4444	(2013) Use and Calibration of Hand-Held Moisture Meters
ASTM D523	(2014) Standard Test Method for Specular Gloss
ASTM D6386	(2010) Standard Practice for Preparation of Zinc (Hot-Dip Galvanized) Coated Iron and Steel Product and Hardware Surfaces for Painting
ASTM E2129	(2010) Standard Practice for Data Collection for Sustainability Assessment of Building Products

MASTER PAINTERS INSTITUTE (MPI)

MPI 101	(Oct 2009) Epoxy Anti-Corrosive Metal Primer
MPI 107	(Oct 2009) Rust Inhibitive Primer (Water-Based)
MPI 108	(Oct 2009) High Build Epoxy Coating, Low Gloss
MPI 134	(Oct 2009) Galvanized Primer (Waterbased)
MPI 139	(Oct 2009) Interior High Performance Latex, MPI Gloss Level 3
MPI 145	(Oct 2009) Institutional Low Odor / VOC Interior Latex, MPI Gloss Level 3

MPI 163	(Oct 2009) Exterior W.B. Light Industrial Coating, Semi-Gloss, MPI Gloss Level 5
MPI 23	(Oct 2009) Surface Tolerant Metal Primer
MPI 39	(Oct 2009) Interior Latex-Based Wood Primer
MPI 51	(Oct 2009) Interior Alkyd, Eggshell, MPI Gloss Level 2
MPI 79	(Oct 2009) Alkyd Anti-Corrosive Metal Primer
MPI 94	(Oct 2009) Exterior Alkyd, Semi-Gloss, MPI Gloss Level 5
MPI 95	(Oct 2009) Quick Drying Primer for Aluminum

SCIENTIFIC CERTIFICATION SYSTEMS (SCS)

SCS SP-01	(2000) Environmentally Preferable Product Specification for Architectural and Anti-Corrosive Paints

THE SOCIETY FOR PROTECTIVE COATINGS (SSPC)

SSPC 7/NACE No.4	(2007; E 2004) Brush-Off Blast Cleaning
SSPC PA 1	(2000; E 2004) Shop, Field, and Maintenance Painting of Steel
SSPC PA Guide 3	(1982; E 1995) A Guide to Safety in Paint Application
SSPC QP 1	(1998; E 2004) Standard Procedure for Evaluating Painting Contractors (Field Application to Complex Industrial Structures)
SSPC SP 1	(1982; E 2004) Solvent Cleaning
SSPC SP 10/NACE No. 2	(2007) Near-White Blast Cleaning
SSPC SP 2	(1982; E 2000; E 2004) Hand Tool Cleaning
SSPC SP 3	(1982; E 2004) Power Tool Cleaning
SSPC SP 6/NACE No.3	(2007) Commercial Blast Cleaning
SSPC VIS 1	(2002; E 2004) Guide and Reference Photographs for Steel Surfaces Prepared by Dry Abrasive Blast Cleaning
SSPC VIS 3	(2004) Guide and Reference Photographs for Steel Surfaces Prepared by Hand and Power Tool Cleaning

U.S. ARMY CORPS OF ENGINEERS (USACE)

EM 385-1-1	(2008; Errata 1-2010; Changes 1-3 2010; Changes 4-6 2011; Change 7 2012) Safety and Health Requirements Manual

U.S. GENERAL SERVICES ADMINISTRATION (GSA)

FED-STD-313	(Rev D; Notice 1) Material Safety Data, Transportation Data and Disposal Data for Hazardous Materials Furnished to Government Activities

U.S. NATIONAL ARCHIVES AND RECORDS ADMINISTRATION (NARA)

29 CFR 1910.1000	Air Contaminants

1.2 SUBMITTALS

Government approval is required for submittals with a "G" designation; submittals not having a "G" designation are for Contractor Quality Control approval. The following shall be submitted in accordance with Section 01 33 00 SUBMITTAL PROCEDURES:

The current MPI, "Approved Product List" which lists paint by brand, label, product name and product code as of the date of contract award, will be used to determine compliance with the submittal requirements of this specification. The Contractor may choose to use a subsequent MPI "Approved Product List", however, only one list may be used for the entire contract and each coating system is to be from a single manufacturer. All coats on a particular substrate must be from a single manufacturer. No variation from the MPI Approved Products List is acceptable.

Samples of specified materials may be taken and tested for compliance with specification requirements.

In keeping with the intent of Executive Order 13101, "Greening the Government through Waste Prevention, Recycling, and Federal Acquisition", products certified by SCS as meeting SCS SP-01 shall be given preferential consideration over registered products. Products that are registered shall be given preferential consideration over products not carrying any EPP designation.

SD-03 Product Data

Environmental Data

Materials

Coating; G

Manufacturer's Technical Data Sheets

Indicate VOC content.

SD-04 Samples

Color; G

Submit manufacturer's samples of paint colors. Cross reference color samples to color scheme as indicated.

SD-07 Certificates

Applicator's qualifications

Qualification Testing laboratory for coatings; G

SD-08 Manufacturer's Instructions

Mixing

Detailed mixing instructions, minimum and maximum application temperature and humidity, potlife, and curing and drying times between coats.

Manufacturer's Material Safety Data Sheets

Submit manufacturer's Material Safety Data Sheets for coatings, solvents, and other potentially hazardous materials, as defined in FED-STD-313.

SD-10 Operation and Maintenance Data

Coatings; G

Preprinted cleaning and maintenance instructions for all coating systems shall be provided.

1.3 APPLICATOR'S QUALIFICATIONS

1.3.1 SSPC QP 1 Certification

All contractors and subcontractors that perform surface preparation or coating application shall be certified by the Society for Protective Coatings (formerly Steel Structures Painting Council) (SSPC) to the requirements of SSPC QP 1 prior to contract award, and shall remain certified while accomplishing any surface preparation or coating application. The painting contractors and painting subcontractors must remain so certified for the duration of the project. If a contractor's or subcontractor's certification expires, the firm will not be allowed to perform any work until the certification is reissued. Requests for extension of time for any delay to the completion of the project due to an inactive certification will not be considered and liquidated damages will apply. Notify the Contracting Officer of any change in contractor certification status.

1.4 QUALITY ASSURANCE

1.4.1 Field Samples and Tests

The Contracting Officer may choose up to two coatings that have been delivered to the site to be tested at no cost to the Government. Take samples of each chosen product as specified in the paragraph "Sampling Procedures." Test each chosen product as specified in the paragraph "Testing Procedure." Products which do not conform, shall be removed from the job site and replaced with new products that conform to the referenced specification. Testing of replacement products that failed initial testing

shall be at no cost to the Government.

1.4.1.1 Sampling Procedure

The Contracting Officer will select paint at random from the products that have been delivered to the job site for sample testing. The Contractor shall provide one quart samples of the selected paint materials. The samples shall be taken in the presence of the Contracting Officer, and labeled, identifying each sample. Provide labels in accordance with the paragraph "Packaging, Labeling, and Storage" of this specification.

1.4.1.2 Testing Procedure

Provide Batch Quality Conformance Testing for specified products, as defined by and performed by MPI. As an alternative to Batch Quality Conformance Testing, the Contractor may provide Qualification Testing for specified products above to the appropriate MPI product specification, using the third-party laboratory approved under the paragraph "Qualification Testing" laboratory for coatings. The qualification testing lab report shall include the backup data and summary of the test results. The summary shall list all of the reference specification requirements and the result of each test. The summary shall clearly indicate whether the tested paint meets each test requirement. Note that Qualification Testing may take 4 to 6 weeks to perform, due to the extent of testing required.

Submit name, address, telephone number, FAX number, and e-mail address of the independent third party laboratory selected to perform testing of coating samples for compliance with specification requirements. Submit documentation that laboratory is regularly engaged in testing of paint samples for conformance with specifications, and that employees performing testing are qualified. If the Contractor chooses MPI to perform the Batch Quality Conformance testing, the above submittal information is not required, only a letter is required from the Contractor stating that MPI will perform the testing.

1.5 REGULATORY REQUIREMENTS

1.5.1 Environmental Protection

In addition to requirements specified elsewhere for environmental protection, provide coating materials that conform to the restrictions of the local Air Pollution Control District and regional jurisdiction. Notify Contracting Officer of any paint specified herein which fails to conform.

1.5.2 Lead Content

Do not use coatings having a lead content over 0.06 percent by weight of nonvolatile content.

1.5.3 Chromate Content

Do not use coatings containing zinc-chromate or strontium-chromate.

1.5.4 Asbestos Content

Materials shall not contain asbestos.

1.5.5 Mercury Content

Materials shall not contain mercury or mercury compounds.

1.5.6 Silica

Abrasive blast media shall not contain free crystalline silica.

1.5.7 Human Carcinogens

Materials shall not contain ACGIH 0100 confirmed human carcinogens (A1) or suspected human carcinogens (A2).

1.6 PACKAGING, LABELING, AND STORAGE

Paints shall be in sealed containers that legibly show the contract specification number, designation name, formula or specification number, batch number, color, quantity, date of manufacture, manufacturer's formulation number, manufacturer's directions including any warnings and special precautions, and name and address of manufacturer. Pigmented paints shall be furnished in containers not larger than 5 gallons. Paints and thinners shall be stored in accordance with the manufacturer's written directions, and as a minimum, stored off the ground, under cover, with sufficient ventilation to prevent the buildup of flammable vapors, and at temperatures between 40 to 95 degrees F.

1.7 SAFETY AND HEALTH

Apply coating materials using safety methods and equipment in accordance with the following:

Work shall comply with applicable Federal, State, and local laws and regulations, and with the ACCIDENT PREVENTION PLAN, including the Activity Hazard Analysis as specified in Section 01 35 26 GOVERNMENT SAFETY REQUIREMENTS and in Appendix A of EM 385-1-1. The Activity Hazard Analysis shall include analyses of the potential impact of painting operations on painting personnel and on others involved in and adjacent to the work zone.

1.7.1 Safety Methods Used During Coating Application

Comply with the requirements of SSPC PA Guide 3.

1.7.2 Toxic Materials

To protect personnel from overexposure to toxic materials, conform to the most stringent guidance of:

a. The applicable manufacturer's Material Safety Data Sheets (MSDS) or local regulation.

b. 29 CFR 1910.1000.

c. ACGIH 0100, threshold limit values.

1.8 ENVIRONMENTAL CONDITIONS

Comply, at minimum, with manufacturer recommendations for space ventilation during and after installation.

1.8.1 Coatings

Do not apply coating when air or substrate conditions are:

a. Less than 5 degrees F above dew point;

b. Below 50 degrees F or over 95 degrees F, unless specifically pre-approved by the Contracting Officer and the product manufacturer. Under no circumstances shall application conditions exceed manufacturer recommendations.

1.8.2 Environmental Data

Submit Table 1 of ASTM E2129 for the coating products.

1.9 COLOR SELECTION

Colors of finish coats shall be as indicated or specified. Where not indicated or specified, colors shall be selected by the Contracting Officer.

Tint each coat progressively darker to enable confirmation of the number of coats.

1.10 LOCATION AND SURFACE TYPE TO BE PAINTED

1.10.1 Painting Included

Where a space or surface is indicated to be painted, include the following unless indicated otherwise.

a. Surfaces behind portable objects and surface mounted articles readily detachable by removal of fasteners, such as screws and bolts.

b. New factory finished surfaces that require identification or color coding and factory finished surfaces that are damaged during performance of the work.

c. Existing coated surfaces that are damaged during performance of the work.

1.10.1.1 Exterior Painting

Includes new surfaces of the canopies and appurtenances. Includes miscellaneous piping and conduit at the exterior of the preassembled enclosure. All other exterior finishes of the enclosure are covered in specification Section 13 34 23 PREASSEMBLED ENCLOSURE.

Exterior painting of the canopies shall include the following:

a. Exposed columns, beams, metal deck, and miscellaneous steel

b. Other contiguous surfaces

1.10.1.2 Interior Painting

Includes new piping, conduit, and plywood backing at the interior of the enclosure. All other interior surfaces of the enclosure to be finished per specification Section 13 34 23 PREASSEMBLED ENCLOSURE.

1.10.2 Painting Excluded

Do not paint the following unless indicated otherwise.

a. Surfaces concealed and made inaccessible by panelboards, fixed ductwork, machinery, and equipment fixed in place.

b. Surfaces in concealed spaces. Concealed spaces are defined as enclosed spaces above suspended ceilings, furred spaces, attic spaces, crawl spaces, elevator shafts and chases.

c. Steel to be embedded in concrete.

d. Copper, stainless steel, aluminum, brass, and lead.

e. Hardware, fittings, and other factory finished items.

1.10.3 Mechanical and Electrical Painting

Includes field coating of interior and exterior new surfaces.

a. Where a space or surface is indicated to be painted, include the following items unless indicated otherwise.

(1) Exposed piping and conduit;

(2) Supports and hangers;

(3) Miscellaneous metalwork and insulation coverings.

b. Do not paint the following, unless indicated otherwise:

(1) New zinc-coated, aluminum, and copper surfaces under insulation

(2) New aluminum jacket on piping

(3) New interior ferrous piping under insulation.

1.10.4 Definitions and Abbreviations

1.10.4.1 Qualification Testing

Qualification testing is the performance of all test requirements listed in the product specification. This testing is accomplished by MPI to qualify each product for the MPI Approved Product List, and may also be accomplished by Contractor's third party testing lab if an alternative to Batch Quality Conformance Testing by MPI is desired.

1.10.4.2 Batch Quality Conformance Testing

Batch quality conformance testing determines that the product provided is the same as the product qualified to the appropriate product specification. This testing shall only be accomplished by MPI testing lab.

1.10.4.3 Coating

A film or thin layer applied to a base material called a substrate. A coating may be a metal, alloy, paint, or solid/liquid suspensions on

various substrates (metals, plastics, wood, paper, leather, cloth, etc.). They may be applied by electrolysis, vapor deposition, vacuum, or mechanical means such as brushing, spraying, calendaring, and roller coating. A coating may be applied for aesthetic or protective purposes or both. The term "coating" as used herein includes emulsions, enamels, stains, varnishes, sealers, epoxies, and other coatings, whether used as primer, intermediate, or finish coat. The terms paint and coating are used interchangeably.

1.10.4.4 DFT or dft

Dry film thickness, the film thickness of the fully cured, dry paint or coating.

1.10.4.5 DSD

Degree of Surface Degradation, the MPI system of defining degree of surface degradation. Five (5) levels are generically defined under the Assessment sections in the MPI Maintenance Repainting Manual.

1.10.4.6 EPP

Environmentally Preferred Products, a standard for determining environmental preferability in support of Executive Order 13101.

1.10.4.7 EXT

MPI short term designation for an exterior coating system.

1.10.4.8 INT

MPI short term designation for an interior coating system.

1.10.4.9 micron / microns

The metric measurement for 0.001 mm or one/one-thousandth of a millimeter.

1.10.4.10 mil / mils

The English measurement for 0.001 in or one/one-thousandth of an inch, equal to 25.4 microns or 0.0254 mm.

1.10.4.11 mm

The metric measurement for millimeter, 0.001 meter or one/one-thousandth of a meter.

1.10.4.12 MPI Gloss Levels

MPI system of defining gloss. Seven (7) gloss levels (G1 to G7) are generically defined under the Evaluation sections of the MPI Manuals. Traditionally, Flat refers to G1/G2, Eggshell refers to G3, Semigloss refers to G5, and Gloss refers to G6.

Gloss levels are defined by MPI as follows:

Gloss Level	Description	Units at 60 degrees	Units at 85 degrees
G1	Matte or Flat	0 to 5	10 max
G2	Velvet	0 to 10	10 to 35
G3	Eggshell	10 to 25	10 to 35
G4	Satin	20 to 35	35 min
G5	Semi-Gloss	35 to 70	
G6	Gloss	70 to 85	
G7	High Gloss		

Gloss is tested in accordance with ASTM D523. Historically, the Government has used Flat (G1 / G2), Eggshell (G3), Semi-Gloss (G5), and Gloss (G6).

1.10.4.13 MPI System Number

The MPI coating system number in each Division found in either the MPI Architectural Painting Specification Manual or the Maintenance Repainting Manual and defined as an exterior (EXT/REX) or interior system (INT/RIN). The Division number follows the CSI Master Format.

1.10.4.14 Paint

See Coating definition.

1.10.4.15 REX

MPI short term designation for an exterior coating system used in repainting projects or over existing coating systems.

1.10.4.16 RIN

MPI short term designation for an interior coating system used in repainting projects or over existing coating systems.

PART 2 PRODUCTS

2.1 MATERIALS

Conform to the coating specifications and standards referenced in PART 3. Submit manufacturer's technical data sheets for specified coatings and solvents. Comply with applicable regulations regarding toxic and hazardous materials.

PART 3 EXECUTION

3.1 PROTECTION OF AREAS AND SPACES NOT TO BE PAINTED

Prior to surface preparation and coating applications, remove, mask, or otherwise protect, hardware, hardware accessories, machined surfaces, radiator covers, plates, lighting fixtures, public and private property, and other such items not to be coated that are in contact with surfaces to be coated. Following completion of painting, workmen skilled in the trades involved shall reinstall removed items. Restore surfaces contaminated by coating materials, to original condition and repair damaged items.

3.2 SURFACE PREPARATION

Remove dirt, splinters, loose particles, grease, oil, and other foreign

matter and substances deleterious to coating performance as specified for each substrate before application of paint or surface treatments. Oil and grease shall be removed prior to mechanical cleaning. Cleaning shall be programmed so that dust and other contaminants will not fall on wet, newly painted surfaces. Exposed ferrous metals such as nail heads on or in contact with surfaces to be painted with water-thinned paints, shall be spot-primed with a suitable corrosion-inhibitive primer capable of preventing flash rusting and compatible with the coating specified for the adjacent areas.

3.3 PREPARATION OF METAL SURFACES

3.3.1 New Ferrous Surfaces

a. Ferrous Surfaces including Shop-coated Surfaces and Small Areas That Contain Rust, Mill Scale and Other Foreign Substances: Solvent clean or detergent wash in accordance with SSPC SP 1 to remove oil and grease. Where shop coat is missing or damaged, clean according to SSPC SP 2, SSPC SP 3, SSPC SP 6/NACE No.3, or SSPC SP 10/NACE No. 2. Brush-off blast remaining surface in accordance with SSPC 7/NACE No.4. Shop-coated ferrous surfaces shall be protected from corrosion by treating and touching up corroded areas immediately upon detection.

3.3.2 Final Ferrous Surface Condition

For tool cleaned surfaces, the requirements are stated in SSPC SP 2 and SSPC SP 3. As a visual reference, cleaned surfaces shall be similar to photographs in SSPC VIS 3.

For abrasive blast cleaned surfaces, the requirements are stated in SSPC 7/NACE No.4, SSPC SP 6/NACE No.3, and SSPC SP 10/NACE No. 2. As a visual reference, cleaned surfaces shall be similar to photographs in SSPC VIS 1.

3.3.3 Galvanized Surfaces

a. New Galvanized Surfaces With Only Dirt and Zinc Oxidation Products: Clean with solvent, steam, or non-alkaline detergent solution in accordance with SSPC SP 1. If the galvanized metal has been passivated or stabilized, the coating shall be completely removed by brush-off abrasive blast. New galvanized steel to be coated shall not be "passivated" or "stabilized" If the absence of hexavalent stain inhibitors is not documented, test as described in ASTM D6386, Appendix X2, and remove by one of the methods described therein.

3.3.4 Non-Ferrous Metallic Surfaces

Aluminum and aluminum-alloy, lead, copper, and other nonferrous metal surfaces.

Surface Cleaning: Solvent clean in accordance with SSPC SP 1 and wash with mild non-alkaline detergent to remove dirt and water soluble contaminants.

3.3.5 Terne-Coated Metal Surfaces

Solvent clean surfaces with mineral spirits, ASTM D235. Wipe dry with clean, dry cloths.

3.4 PREPARATION OF PLYWOOD SURFACES

3.4.1 New Plywood Surfaces:

a. Plywood surfaces shall be cleaned of foreign matter.

   Surface Cleaning: Surfaces shall be free from dust and other deleterious substances and in a condition approved by the Contracting Officer prior to receiving paint or other finish. Do not use water to clean uncoated plywood.

b. Moisture content of the plywood shall not exceed 12 percent as measured by a moisture meter in accordance with ASTM D4444, Method A, unless otherwise authorized.

c. Plywood surfaces adjacent to surfaces to receive water-thinned paints shall be primed and/or touched up before applying water-thinned paints.

d. Cracks and Nailheads: Set and putty stop nailheads and putty cracks after the prime coat has dried.

e. Cosmetic Repair of Minor Defects:

   (1) Open Joints and Other Openings: Fill with whiting putty, linseed oil putty. Sand smooth after putty has dried.

3.5 APPLICATION

3.5.1 Coating Application

Painting practices shall comply with applicable federal, state and local laws enacted to insure compliance with Federal Clean Air Standards. Apply coating materials in accordance with SSPC PA 1. SSPC PA 1 methods are applicable to all substrates, except as modified herein.

At the time of application, paint shall show no signs of deterioration. Uniform suspension of pigments shall be maintained during application.

Unless otherwise specified or recommended by the paint manufacturer, paint may be applied by brush, roller, or spray. Use trigger operated spray nozzles for water hoses. Rollers for applying paints and enamels shall be of a type designed for the coating to be applied and the surface to be coated. Wear protective clothing and respirators when applying oil-based paints or using spray equipment with any paints.

Paints, except water-thinned types, shall be applied only to surfaces that are completely free of moisture as determined by sight or touch.

Thoroughly work coating materials into joints, crevices, and open spaces. Special attention shall be given to insure that all edges, corners, crevices, welds, and rivets receive a film thickness equal to that of adjacent painted surfaces.

Each coat of paint shall be applied so dry film shall be of uniform thickness and free from runs, drops, ridges, waves, pinholes or other voids, laps, brush marks, and variations in color, texture, and finish. Hiding shall be complete.

Touch up damaged coatings before applying subsequent coats. Interior areas

shall be broom clean and dust free before and during the application of coating material.

a. Drying Time: Allow time between coats, as recommended by the coating manufacturer, to permit thorough drying, but not to present topcoat adhesion problems. Provide each coat in specified condition to receive next coat.

b. Primers, and Intermediate Coats: Do not allow primers or intermediate coats to dry more than 30 days, or longer than recommended by manufacturer, before applying subsequent coats. Follow manufacturer's recommendations for surface preparation if primers or intermediate coats are allowed to dry longer than recommended by manufacturers of subsequent coatings. Each coat shall cover surface of preceding coat or surface completely, and there shall be a visually perceptible difference in shades of successive coats.

c. Finished Surfaces: Provide finished surfaces free from runs, drops, ridges, waves, laps, brush marks, and variations in colors.

d. Thermosetting Paints: Topcoats over thermosetting paints (epoxies and urethanes) should be applied within the overcoating window recommended by the manufacturer.

3.5.2 Mixing and Thinning of Paints

Reduce paints to proper consistency by adding fresh paint, except when thinning is mandatory to suit surface, temperature, weather conditions, application methods, or for the type of paint being used. Obtain written permission from the Contracting Officer to use thinners. The written permission shall include quantities and types of thinners to use.

The use of thinner shall not relieve the Contractor from obtaining complete hiding, full film thickness, or required gloss. Thinning shall not cause the paint to exceed limits on volatile organic compounds. Paints of different manufacturers shall not be mixed.

3.5.3 Two-Component Systems

Two-component systems shall be mixed in accordance with manufacturer's instructions. Any thinning of the first coat to ensure proper penetration and sealing shall be as recommended by the manufacturer for each type of substrate.

3.5.4 Coating Systems

a. Systems by Substrates: Apply coatings that conform to the respective specifications listed in the following Tables:

Table

Division 5. Exterior Metal, Ferrous and Non-Ferrous Paint Table

Division 5. Interior Metal, Ferrous and Non-Ferrous Paint Table
Division 6. Interior Wood Paint Table

b. Minimum Dry Film Thickness (DFT): Apply paints, primers, varnishes, enamels, undercoats, and other coatings to a minimum dry film thickness of 1.5 mil each coat unless specified otherwise in the Tables. Coating

thickness where specified, refers to the minimum dry film thickness.

c. Coatings for Surfaces Not Specified Otherwise: Coat surfaces which have not been specified, the same as surfaces having similar conditions of exposure.

3.6 COATING SYSTEMS FOR METAL

Apply coatings of Tables in Division 5 for Exterior and Interior.

a. Apply specified ferrous metal primer on the same day that surface is cleaned, to surfaces that meet all specified surface preparation requirements at time of application.

b. Inaccessible Surfaces: Prior to erection, use one coat of specified primer on metal surfaces that will be inaccessible after erection.

c. Shop-primed Surfaces: Touch up exposed substrates and damaged coatings to protect from rusting prior to applying field primer.

d. Pipes and Tubing: The semitransparent film applied to some pipes and tubing at the mill is not to be considered a shop coat, but shall be overcoated with the specified ferrous-metal primer prior to application of finish coats.

e. Exposed Nails, Screws, Fasteners, and Miscellaneous Ferrous Surfaces. On surfaces to be coated with water thinned coatings, spot prime exposed nails and other ferrous metal with latex primer MPI 107.

3.7 COATING SYSTEMS FOR PLYWOOD

a. Apply coatings of Tables in Division 6 for Exterior and Interior.

b. Prior to erection, apply two coats of specified primer to treat and prime plywood surfaces which will be inaccessible after erection.

3.8 PAINT TABLES

All DFT's are minimum values.

3.8.1 EXTERIOR PAINT TABLES

DIVISION 5: EXTERIOR METAL, FERROUS AND NON-FERROUS PAINT TABLE

STEEL / FERROUS SURFACES

A. New Steel that has been hand or power tool cleaned to SSPC SP 2 or SSPC SP 3

1. Alkyd
New; MPI EXT 5.1Q-G5 (Semigloss) Existing; MPI REX 5.1D-G5

Primer:	Intermediate:	Topcoat:
MPI 23	MPI 94	MPI 94

System DFT: 5.25 mils

B. New Steel that has been blast-cleaned to SSPC SP 6/NACE No.3:

1. Alkyd
New; MPI EXT 5.1D-G5 (Semigloss) / Existing; MPI REX 5.1D-G5

STEEL / FERROUS SURFACES

Primer:	Intermediate:	Topcoat:
MPI 79	MPI 94	MPI 94

System DFT: 5.25 mils

C. New steel blast cleaned to SSPC SP 10/NACE No. 2:

1. Waterborne Light Industrial
   MPI EXT 5.1R-G5 (Semigloss)

Primer:	Intermediate:	Topcoat:
MPI 101	MPI 108	MPI 163

System DFT: 8.5 mils

EXTERIOR GALVANIZED SURFACES

A. New Galvanized surfaces:

1. Waterborne Primer / Waterborne Light Industrial Coating
   MPI EXT 5.3J-G5 (Semigloss)

Primer:	Intermediate:	Topcoat:
MPI 134	MPI 163	MPI 163

System DFT: 4.5 mils

2. Epoxy Primer / Waterborne Light Industrial Coating
   MPI EXT 5.3K-G5 (Semigloss)

Primer:	Intermediate:	Topcoat:
MPI 101	MPI 163	MPI 163

System DFT: 5 mils

B. Galvanized surfaces with slight coating deterioration; little or no rusting:

1. Waterborne Light Industrial Coating
   MPI REX 5.3J-G5 (Semigloss)

Primer:	Intermediate:	Topcoat:
MPI 134	N/A	MPI 163

System DFT: 4.5 mils

EXTERIOR SURFACES, OTHER METALS (NON-FERROUS)

A. Surfaces adjacent to painted surfaces; Mechanical, Electrical, and miscellaneous metal items not otherwise specified except floors, hot metal surfaces, and new prefinished equipment. Match surrounding finish:

1. Alkyd
   MPI EXT 5.1D-G5 (Semigloss)

Primer:	Intermediate:	Topcoat:
MPI 79	MPI 94	MPI 94

System DFT: 5.25 mils

2. Waterborne Light Industrial Coating
   MPI EXT 5.1C-G5(Semigloss)

Primer:	Intermediate:	Topcoat:
MPI 79	MPI 163	MPI 163

System DFT: 5 mils

3.8.2 INTERIOR PAINT TABLES

DIVISION 5: INTERIOR METAL, FERROUS AND NON-FERROUS PAINT TABLE

INTERIOR STEEL / FERROUS SURFACES

A. Metal, Mechanical, Electrical, Surfaces adjacent to painted surfaces (Match surrounding finish), and miscellaneous metal items not otherwise specified except floors, hot metal surfaces, and new prefinished equipment:

1. High Performance Architectural Latex
   MPI INT 5.1R-G3 (Eggshell)

Primer:	Intermediate:	Topcoat:
MPI 79	MPI 139	MPI 139

   System DFT: 5 mils

2. Alkyd
   MPI INT 5.1E-G3 (Eggshell)

Primer:	Intermediate:	Topcoat:
MPI 79	MPI 51	MPI 51

   System DFT: 5.25 mils

B. Miscellaneous non-ferrous metal items not otherwise specified except floors, hot metal surfaces, and new prefinished equipment. Match surrounding finish:

1. High Performance Architectural Latex
   MPI INT 5.4F-G3 (Eggshell)

Primer:	Intermediate:	Topcoat:
MPI 95	MPI 139	MPI 139

   System DFT: 5 mils

2. Alkyd
   MPI INT 5.4J-G3 (Eggshell)

Primer:	Intermediate:	Topcoat:
MPI 95	MPI 51	MPI 51

   System DFT: 5 mils

DIVISION 6: INTERIOR WOOD PAINT TABLE

A. New plywood not otherwise specified:

1. Institutional Low Odor / Low VOC Latex
   New; MPI INT 6.3V-G3 (Eggshell)

Primer:	Intermediate:	Topcoat:
MPI 39	MPI 145	MPI 145

   System DFT: 4 mils

-- End of Section --

SECTION 09 97 13.15

REPAIR OF EPOXY/FLUOROPOLYURETHANE INTERIOR COATING OF WELDED STEEL PETROLEUM FUEL TANKS
02/10

PART 1 GENERAL

1.1 REFERENCES

The publications listed below form a part of this specification to the extent referenced. The publications are referred to in the text by the basic designation only.

AMERICAN PETROLEUM INSTITUTE (API)

API Std 650	(2013; Errata 2013) Welded Tanks for Oil Storage
API Std 653	(2009; Addendum 1 2010; Addendum 2 2012; Addendum 3 2013) Tank Inspection, Repair, Alteration, and Reconstruction

ASTM INTERNATIONAL (ASTM)

ASTM D3276	(2007) Painting Inspectors (Metal Substrates)
ASTM D3925	(2002; R 2010) Sampling Liquid Paints and Related Pigmented Coatings
ASTM D4285	(1983; R 2012) Indicating Oil or Water in Compressed Air
ASTM D7127	(2013) Measurement of Surface Roughness of Abrasive Blast Cleaned Metal Surfaces using a Portable Stylus Instrument

INTERNATIONAL ORGANIZATION FOR STANDARDIZATION (ISO)

ISO 9001	(2008; Corr 1 2009) Quality Management Systems- Requirements

NACE INTERNATIONAL (NACE)

NACE SP0178	(2007) Design, Fabrication, and Surface Finish Practices for Tanks and Vessels to be for Immersion Service
NACE SP0188	(1999; R 2006) Discontinuity (Holiday) Testing of New Protective Coatings on Conductive Substrates

THE SOCIETY FOR PROTECTIVE COATINGS (SSPC)

SSPC 7/NACE No.4	(2007; E 2004) Brush-Off Blast Cleaning
SSPC Guide 12	(1998; E 2004) Guide for Illumination of

	Industrial Painting Projects
SSPC PA 1	(2000; E 2004) Shop, Field, and Maintenance Painting of Steel
SSPC PA 2	(2012) Measurement of Dry Coating Thickness With Magnetic Gages
SSPC QP 1	(1998; E 2004) Standard Procedure for Evaluating Painting Contractors (Field Application to Complex Industrial Structures)
SSPC QP 5	(1999; E 2004) Standard Procedure for Evaluating the Qualifications of Coating and Lining Inspection Companies
SSPC QS 1	(2004) Standard Procedure for Evaluating a Contractor's Advanced Quality Management System
SSPC SP 1	(1982; E 2004) Solvent Cleaning
SSPC SP 10/NACE No. 2	(2007) Near-White Blast Cleaning
SSPC SP COM	(2004) Surface Preparation Commentary for Steel and Concrete Substrates
SSPC VIS 1	(2002; E 2004) Guide and Reference Photographs for Steel Surfaces Prepared by Dry Abrasive Blast Cleaning

U.S. DEPARTMENT OF DEFENSE (DOD)

MIL-DTL-24441	(2009; Rev D) Paint, Epoxy-Polyamide, General Specification for
MIL-DTL-24441/29	(2009; Rev B) Paint, Epoxy-Polyamide, Green Primer, Formula 150, Type IV
MIL-DTL-24441/31	(2009; Rev B) Paint, Epoxy-Polyamide, White, Formula 152, Type IV

U.S. GENERAL SERVICES ADMINISTRATION (GSA)

FED-STD-595	(Rev C; Notice 1) Colors Used in Government Procurement

U.S. NATIONAL ARCHIVES AND RECORDS ADMINISTRATION (NARA)

29 CFR 1910.1000	Air Contaminants
29 CFR 1910.134	Respiratory Protection
29 CFR 1926.59	Hazard Communication

1.2 DEFINITIONS

Definitions are provided throughout this Section, generally in the

paragraph where used, and denoted by capital letters. The following definitions are used throughout this Section:

a. CEILING - interior tank surfaces that extend from the horizontal plane at the designated maximum fuel line upward, including the upper portion of the tank shell (walls), columns, structural steel, the underside of the roof plates and other steel components in this area.

b. SHELL - interior tank surfaces that extend along the vertical tank walls between the horizontal planes approximately 40 inches above the shell to bottom joint upward to the horizontal plane at the designated fuel line, including columns, wall plates, and other steel components in this area.

c. FLOOR - interior tank surfaces below the horizontal plane approximately 40 inches above the shell to bottom joint, including columns, wall plates, piping, pipe supports, bottom plates, and other steel components in this area.

1.3 SUBMITTALS

Government approval is required for submittals with a "G" designation; submittals not having a "G" designation are for Contractor Quality Control approval. The following shall be submitted in accordance with Section 01 33 00 SUBMITTAL PROCEDURES:

SD-05, Design Data

Environmental Control System

Use of Door Sheet Access Way; G

SD-06 Test Reports

Coating Sample Test Reports

Inspection Report Forms

Daily Inspection Reports

SD-07 Certificates

Contract Errors, Omissions, and Other Discrepancies

Corrective Action Procedures

Coating Work Plan

Qualifications of Certified Industrial Hygienist (CIH)

Qualifications of Certified Protective Coatings Specialist (PCS)

Qualifications of Coating Inspection Company

Qualifications of QC Specialist Coating Inspector

Qualifications of Testing Laboratory for Coatings

Qualifications of Coating Contractors

Roof Joint Sealant Materials

Roof Joint Sealant Compatibility

Epoxy Coating Materials

Coating System Component Compatibility

SD-08 Manufacturer's Instructions

Roof Joint Sealant Instructions

Coating System Instructions

SD-11 Closeout Submittals

Inspection Logbook; G

1.4 QUALITY ASSURANCE

1.4.1 Contract Errors, Omissions, and Other Discrepancies

Submit all errors, omissions, and other discrepancies in contract documents the Contracting Officer within 30 days of contract award for all work covered in this Section, other than the work that will not be uncovered until a later date. All such discrepancies shall be addressed and resolved, and the Coating Work Plan modified, prior to beginning the Initial and Follow-Up phases of work. Discrepancies that become apparent only after work is uncovered shall be identified at the earliest discoverable time and submitted for resolution. Schedule time (Float) should be built into the project schedule at those points where old work is to be uncovered or where access is not available during the first 30 days after award, to allow for resolution of contract discrepancies.

1.4.2 Corrective Action (CA)

CA shall be included in the Quality Control Plan.

1.4.2.1 Corrective Action Procedures

Develop procedures for determining the root cause of each non-compliance, developing a plan to eliminate the root cause so that the non-compliance does not recur, and following up to ensure that the root cause was eliminated. Develop Corrective Action Request (CAR) forms for initiating CA, and for tracking and documenting each step.

1.4.2.2 Implement Corrective Action

The Contractor shall take action to identify and eliminate the root cause of each non-compliance so as to prevent recurrence. These procedures shall apply to non-compliance in the work, and to non-compliance in the QC System. Corrective actions shall be appropriate to the effects of the non-compliance encountered. Each CAR shall be serialized, tracked in a Log to completion and acceptance by the Contracting Officer, and retained in project records. The Corrective Action Log, showing status of each CAR, shall be submitted to the Contracting Officer monthly. A CAR may be initiated by either the Contractor or the Contracting Officer. The Contracting Officer must approve each CAR at the root cause identification

stage, the plan for elimination stage, and the close out stage after verification that the root cause has been eliminated.

1.4.3 Coating Work Plan

This work plan shall be considered as part of the Quality Control Plan.

Provide procedures for reviewing contract documents immediately after award to identify errors, omissions, and discrepancies so that any such issues can be resolved prior to project planning and development of detailed procedures.

Provide procedures for verification of key processes during Initial Phase to ensure that contract requirements can be met. Key processes shall include surface preparation, coating application and curing, inspection, and documentation, and any other process that might adversely impact orderly progression of work.

Provide procedures for all phases of coating operations, including planned work, rework, repair, inspection, and documentation. Address mobilization and setup, surface preparation, coating application, coating initial cure, tracking and correction of non-compliant work, and demobilization. Coordinate work processes with health and safety plans and confined space entry plans. For each process, provide procedures that include appropriate work instructions, material and equipment requirements, personnel qualifications, controls, and process verification procedures. Provide procedures for inspecting work to verify and document compliance with contract requirements, including inspection forms and checklists, and acceptance and rejection criteria.

Provide procedures for installing floating pan after tank lining has been repaired and cured, and how the coated floor and shell surfaces will be protected during pan installation and tank modification work.

Provide procedures for correcting non-compliant work. Detailed procedures are required in advance to avoid delays in meeting overcoat windows as well as to avoid delays in production. Provide procedures for repairing defects in the coating film, such as runs, drips, sags, holidays, overspray, as well as how to correct coating thickness non-compliance, any other areas of repair or rework that might be adversely affected by delays in preparing and approving new procedures.

If a procedure is based on a proposed or approved request for deviation, the deviation shall be referenced. Changes to procedures shall be noted by submittal number and date approved, clearly delineating old requirements and new requirements, so that the records provide a continuous log of requirements and procedures.

1.4.4 Design Data

1.4.4.1 Environmental Control System

Submit design details of the proposed environmental control system to include ventilation, humidity control, and temperature regulation. Provide calculations for humidity control during separate surface preparation and coating application procedures, ventilation requirements during coating application, and maximum allowable coating application rates to coincide with ventilation. Include basis of design data on local conditions. Provide equipment layout sketches and procedures showing

function of each piece of equipment and fail-safe measures. A Certified Industrial Hygienist shall approve calculations, work procedures and personal protective equipment.

1.4.4.2 Use of Door Sheet Access Way

If use of a door sheet access way is desired, submit design drawings and calculations that address all aspects of the door sheet opening in accordance with API Std 653 and API Std 650, including cutting of door sheet, tank stabilization, door sheet replacement, weld testing, and final acceptance. A registered engineer shall approve all calculations and procedures prior to submittal for government approval.

1.4.5 Test Reports

1.4.6 Qualifications

1.4.6.1 Qualifications of Certified Industrial Hygienist (CIH)

Submit name, address, telephone number, FAX number, and e-mail address of the independent third party CIH. Submit documentation that hygienist is certified by the American Board of Industrial Hygiene in comprehensive practice, including certification number and date of certification/recertification. Provide evidence of experience with hazards involved in industrial coating application work.

1.4.6.2 Qualifications of Certified Protective Coatings Specialist (PCS)

Submit name, address, telephone number, FAX number, and e-mail address of the independent third party PCS. Submit documentation that specialist is certified by SSPC: The Society for Protective Coatings (SSPC) as a PCS, including certification number and date of certification/recertification. If the PCS is employed by the same coating inspection company to which the coating inspector is employed, this does not violate the independent third-party requirements. The PCS shall remain certified during the entire project, and the Contracting Officer shall be notified of any change in certification status within 10 days of the change. The PCS shall not be the designated coating inspector.

1.4.6.3 Qualifications of Coating Inspection Company

Submit documentation that the coating inspection company that will be performing all coating inspection functions is certified by SSPC to the requirements of SSPC QP 5 prior to contract award, and shall remain certified while accomplishing any coating inspection functions. The coating inspection company must remain so certified for the duration of the project. If a coating inspection company's certification expires, the firm will not be allowed to perform any inspection functions, and all surface preparation and coating application work must stop, until the certification is reissued. Requests for extension of time for any delay to the completion of the project due to an inactive certification will not be considered and liquidated damages will apply. Notify the Contracting Officer of any change in coating inspection company certification status.

1.4.6.4 Qualifications of QC Specialist Coating Inspector

Submit documentation that each coating inspector is employed, and qualified to SSPC QP 5, Level III, by the selected coating inspection company. Each inspector shall remain employed by the coating inspection

company while performing any coating inspection functions.

1.4.6.5 Qualifications of Testing Laboratory for Coatings

Submit name, address, telephone number, FAX number, and e-mail address of the independent third party laboratory selected to perform testing of coating samples for compliance with specification requirements. Submit documentation that laboratory is regularly engaged in testing of paint samples for conformance with specifications, and that employees performing testing are qualified.

1.4.6.6 Qualifications of Coating Contractors

All Contractors and Subcontractors that perform surface preparation or coating application shall be certified to either ISO 9001 or SSPC QP 1 and SSPC QS 1 prior to contract award, and shall remain certified while accomplishing any surface preparation or coating application. The painting Contractors and painting Subcontractors must remain so certified for the duration of the project. If a Contractor's or Subcontractor's certification expires, the firm will not be allowed to perform any work until the certification is reissued. Requests for extension of time for any delay to the completion of the project due to an inactive certification will not be considered and liquidated damages will apply. Notify the Contracting Officer of any change in Contractor certification status.

1.4.6.7 Roof Joint Sealant Materials

Provide manufacturer's certification of conformance to contract requirements.

1.4.6.8 Roof Joint Sealant Compatibility

Provide manufacturer's certification that the selected joint sealant is compatible with the epoxy primer.

1.4.6.9 Epoxy Coating Materials

Provide manufacturer's certification that the epoxy lining materials are currently approved by the Naval Sea Systems Command and listed on the Qualified Products Lists (QPL) for the specified materials.

1.4.6.10 Coating System Component Compatibility

Provide certification from each manufacturer of components of the coating system, epoxy primer, epoxy intermediate, and epoxy topcoat, that the supplied coating material is suitable for use in the specified coating system. Each manufacturer shall identify the specific products, including manufacturer's name, which their product may be used with. The certification shall provide the name of the manufacturer that will provide technical support for the entire system. When all coating materials are manufactured by one manufacturer, this certification is not required.

1.4.7 Protective Coating Specialist (PCS)

The PCS shall be considered a QC Specialist and shall report to the QC Manager, as specified in Section 01 45 00.00 20 NAVFAC QUALITY CONTROL. The PCS shall approve all submittals prior to submission to the QC Manager for approval or submission to the government for approval.

1.4.8 Pre-Application Meeting

After approval of submittals but prior to the initiation of coating work, Contractor representatives, including at a minimum, project superintendent and QC manager, paint foreman, coating inspector, and PCS shall have a pre-application coating preparatory meeting. This meeting shall be in addition to the pre-construction conference. Specific items addressed shall include: corrective action requirements and procedures, coating work plan, safety plan, coordination with other Sections, inspection standards, inspection requirements and tools, test procedures, environmental control system, safety plan, and test logs. Notify Contracting Officer at least ten days prior to meeting.

1.5 PRODUCT DATA

1.5.1 Roof Joint Sealant Instructions

Submit manufacturer's printed instructions including detailed mixing and application procedures, minimum and maximum application temperatures, and curing procedures. Include Materials Safety Data Sheets (MSDS) for materials to be used at the job site in accordance with 29 CFR 1926.59.

1.5.2 Coating System Instructions

Submit manufacturer's printed instructions including detailed mixing and application procedures, number and types of coats required, minimum and maximum application temperatures, and curing procedures. Include Materials Safety Data Sheets (MSDS) for materials to be used at the job site in accordance with 29 CFR 1926.59.

1.6 DELIVERY AND STORAGE

Ship, store, and handle materials in accordance with SSPC PA 1, and as modified in this Section. Maintain temperature in storage spaces between 40 and 85 degrees F, and air temperature more than 5 degrees F above the dew-point at all times. Inspect materials for damage prior to use and return non-compliant materials to manufacturer. Remove materials with expired shelf life from government property immediately and notify the Contracting Officer.

If materials are approaching shelf life expiration and an extension is desired, samples may be sent to the manufacturer, along with complete records of storage conditions, with a request for shelf life extension. If the manufacturer finds the samples and storage data suitable for shelf life extension, the manufacturer may issue an extension, referencing the product evaluation and the review of storage records. Products may not be extended longer than allowed in the product specification.

1.7 COATING HAZARDS

Ensure that employees are trained in all aspects of the safety plan. Specified coatings may have potential health hazards if ingested or improperly handled. The coating manufacturer's written safety precautions shall be followed throughout mixing, application, and curing of the coatings. During tank cleaning, cleanup, surface preparation, and paint application phases, ensure that employees are protected from toxic and hazardous chemical agents which exceed concentrations in 29 CFR 1910.1000. Comply with respiratory protection requirements in 29 CFR 1910.134. The

CIH shall approve work procedures and personal protective equipment.

1.8 WORK SEQUENCE

Repair tank interior coating following tank tightness testing. Complete tank interior coating repair before installation of floating pan and tank strapping effort.

1.9 JOB SITE REFERENCES

Make available to the Contracting Officer at least one copy each of API Std 653, ASTM D3276, ASTM D3925, ASTM D4285, ASTM D7127, NACE SP0178 and companion visual comparator, NACE SP0188, SSPC SP COM, SSPC SP 1, SSPC 7/NACE No.4, SSPC SP 10/NACE No. 2, SSPC PA 1, SSPC PA 2, SSPC Guide 12, SSPC VIS 1, SSPC QP 1, SSPC QS 1, and an SSPC Certified Contractor Evaluation Form at the job site.

PART 2 PRODUCTS

2.1 ROOF JOINT SEALANT

Industrial grade, two component, minimum 95 percent solids by volume, polysulfide type caulking material that has a minimum history of 10 years acceptable service in fuel tanks. Sealant shall be compatible with the epoxy primer and suitable for direct application to prepared steel surfaces. Sealant shall contain no more than 0.06 percent by dry weight Lead, no more than 0.06 percent by dry weight Cadmium, and no more than 0.00 percent by dry weight Chromium.

2.2 COATING SYSTEM

Alternate systems or products will not be considered. All primer and intermediate coat materials shall be supplied by one supplier. The entire coating system is intended to be applied in the field. The fluoropolyurethane topcoat will not be applied to coating repair areas. It is included only as reference to the Contractor for what the existing coating system is.

2.2.1 Epoxy Primer and Intermediate Coats

The epoxy coating materials shall be approved by the Naval Sea Systems Command and listed on their current Qualified Products List (QPL) for the specified materials.

2.2.1.1 Epoxy Primer Coat

Epoxy polyamide, MIL-DTL-24441/29 (Formula 150, Type IV, Green).

2.2.1.2 Epoxy Intermediate Coat

Epoxy polyamide, MIL-DTL-24441/31 (Formula 152, Type IV, White (Tinted)). Tint to approximately FED-STD-595 color number 27778 parchment using pigment dispersions prepared for epoxy paint tinting. Manufacturer shall tint material and appropriately label. All other requirements of this Military Specification apply.

2.2.2 Fluoropolyurethane Topcoat

Fluoropolyurethane topcoat as specified in Table II - Modified

PTFE-Pigmented Fluoropolyurethane topcoat. The fluoropolyurethane topcoat will not be applied to coating repair areas. It is included only as reference to the Contractor for what the existing coating system is.

2.3 COATING SAMPLE COLLECTION AND SHIPPING KIT

Provide a kit that contains one quart can for the base of each coating material, an appropriately sized can for each activator, dipping cups for each component to be sampled, a shipping box sized for the samples to to be shipped, and packing material. Mark cans for the appropriate component. Provide shipping documents, including either pre-paid shipping or a shipper number that can be used by the QC Manager to arrange pickup, addressed to the approved coating testing laboratory.

2.4 TEST KITS

2.4.1 Test Kit for Measuring Chloride, Sulfate and Nitrate Ions on Steel and Coated Surfaces

Provide test kits called CHLOR*TEST CSN Salts, as manufactured by CHLOR*RID International Inc. of Chandler, Arizona (www.chlor-rid.com) or equal. An "equal" test kit shall meet the following requirements:

a. Kit contains all materials,supplies, tools and instructions for field testing and on-site quantitative evaluation of chloride, sulfate and nitrate ions;

b. Kit extract solution is acidic, factory pre-measured, pre-packaged, and of uniform concentration;

c. Kit components and solutions are mercury free and environmentally friendly;

d. Kit contains new materials and solutions for each test extraction;

e. Extraction test container (vessel, sleeve, cell. etc.) creates a sealed, encapsulated environment during salt ion extraction;

f. Test extract container is suitable for testing the following steel surfaces: horizontal (up/down configuration), vertical, flat, curved, smooth, pitted, and rough;

g. All salt ion concentrations are directly measured in micrograms per square centimeter.

2.4.2 Test Kit for Identifying Amine Blush on Epoxy Surfaces

After coating and/or primer has hardened and prior to applying the next coat, test for unreacted amines using the AMINE BLUSH CHECK, manufactured by Elcometer, Rochester Hills, Michigan, or equal. To be considered for approval as an "equal" test kit it shall meet the following requirements:

a. Be a completely self-contained field test kit with all materials, supplies, tools and instructions to perform tests and indicate the presence of unreacted amines;

b. Use an identifiable, consistent, uniform, pre-packaged, factory pre-measured indicating solution;

c. Kit contains no mercury or lead and is environmentally friendly;

d. Kit contains a solution of an unreacted amine for the purpose of "self checking" the indicator solution;

2.5 ABRASIVE

To protect the existing coating near repair work efforts, abrasive blasting shall not be permitted within the tanks for surface preparation.

PART 3 EXECUTION

Perform all work, rework, and repair in accordance with approved procedures in the Coating Work Plan.

3.1 DOOR SHEET ACCESS WAY

If desired by a Contractor, a door sheet may be cut out of a tank to facilitate personnel and equipment access. The door sheet shall be removed in accordance with API Std 653 and API Std 650, including all structural, welding, testing, and evaluation requirements. After completion of coating repairs at CEILING and SHELL and prior to preparation and coating repairs of FLOOR, the door sheet shall be installed, tested, and accepted. The door sheet and surrounding areas shall be surfaced in accordance with Section 4 of NACE SP0178, and accompanying Visual Comparator, to the condition described and shown for NACE Weld Surface Preparation Designation ”C” welds for interior surfaces and "D" Welds for exterior surfaces. The door sheet and the feathered areas of the SHELL shall be prepared and coated with the FLOOR in accordance with all requirements of this Section. The Contractor is responsible for cutting out the door sheet, stabilizing the tank or openings while the door sheet is out, replacing the door sheet, and testing the replaced door sheet using qualified engineering and testing services. Perform tank tightness testing after coating where a door sheet access way was installed for this project.

3.2 COATING AND ABRASIVE SAMPLE COLLECTION AND TESTING

Sample and test materials delivered to the jobsite. Notify Contracting Officer three days in advance of sampling. The QC Manager, and either the PCS or coating inspector, shall witness all sampling.

3.2.1 Coating Sample Collection

Provide a sample collection kit as required in paragraph COATING SAMPLE COLLECTION AND SHIPPING KIT. From each lot, obtain a one quart sample of each base material, and proportional samples of each activator based on mix ratio, by random selection from sealed containers in accordance with ASTM D3925. Prior to sampling, mix contents of each sealed container to ensure uniformity. As an alternative to collecting small samples from kits, entire kits may be randomly selected and shipped to laboratory, observing all requirements for witnessing and traceability. For purposes of quality conformance inspection, a lot is defined as that quantity of materials from a single, uniform batch produced and offered for delivery at one time. A batch is defined as that quantity of material processed by the manufacturer at one time and identified by number on the label. Identify samples by designated name, specification number, batch number, project contract number, sample date, intended use, and quantity involved. The QC Manager will take possession of the packaged samples,

contact the shipping company to arrange for pickup, and relinquish the samples only to the shipping representative for shipment to the approved laboratory for testing as required by the paragraph entitled "Coating Sample Test Reports."

3.2.2 Coating Sample Test Reports

Submit test results for each lot of coating material delivered to the jobsite. Test samples of primer, intermediate, and topcoat materials for compliance with requirements of Table I. Reject entire batch represented by samples that fail one or more tests, select new lots, and test samples.

3.3 FUEL REMOVAL AND TANK CLEANING

Remove fuel and clean storage tanks in accordance with Section 33 65 00 CLEANING PETROLEUM STORAGE TANKS.

3.4 TANK MODIFICATIONS

All tank modifications and repair shall be performed prior to coating repair and in accordance with Section 33 56 13.13 MODIFICATION TO STEEL TANKS WITH FIXED ROOFS.

3.5 LIGHTING

Provide lighting for all work areas as prescribed in SSPC Guide 12.

3.6 ENVIRONMENTAL CONDITIONS

3.6.1 Control System Requirements

Provide and utilize dehumidification and ventilation equipment to control humidity, temperature, and vapor levels in tank from beginning of surface preparation through coating application and for four days after the last coating is applied. System shall maintain vapor concentrations at or below 10 percent of Lower Explosive Limit (LEL). System may incorporate any combination of solid desiccant and direct expansion refrigeration equipment. No liquid, granular, calcium chloride, or lithium chloride drying systems will be accepted. Use only electric, indirect fired combustion, indirect friction, or steam coil auxiliary heaters. System shall be compatible with removal of dust and solvent vapors, and shall have fail-safe measures to ensure reliability during operations.

3.6.2 Automated Monitoring Requirements

Provide continuous monitoring of DH equipment, and temperature, relative humidity, and dew point data at pertinent points on the structure, during surface preparation, coating application, and initial cure. Locate sensors to provide pertinent data for the surface preparation and coat application being performed. Make data available to the Contracting Officer through Internet access. Provide monitoring equipment to perform as follows:

a. Data is collected in the field unit in one minute increments, and available for download (on-site) in a standard format. Contractor shall collect this data and make available to the Contracting Officer;

b. Monitoring equipment shall have backup power such that data collection and transmission to web server will be uninterrupted during the entire

period of the dehumidification requirement;

c. Monitoring equipment shall have capability to measure surface temperatures at a minimum of four locations anywhere on a 150 foot diameter by 50 foot high tank;

d. Monitoring equipment shall have capability to measure interior and exterior dry bulb temperature (DB), relative humidity (RH), and dewpoint temperature (DP);

e. Data shall be available continuously through secure Internet connection, using widely available web browsers;

f. Internet accessible data shall be collected and stored in maximum 15 minute increments, and lag time between data collection and online availability shall be no greater than 70 minutes;

g. Internet accessible data shall be available for viewing online in tabular format, and graphical format using selected data;

h. Internet accessible data shall be available for download in user-defined segments, or entire project to date, in a standard format usable by Microsoft Excel and other spreadsheet programs.

i. Internet-based controls shall provide alerts to pre-designated parties through email messaging;

j . Internet-based controls shall monitor data uploads from field unit and issue alert if data not initiated within 60 minutes of last upload;

k. Internet-based controls shall monitor operation of DH equipment and issues alert when power remains off for more than 15 seconds, or if pre-determined temperature, RH, or DP conditions are exceeded;

The requirements listed here were developed around the Munters Exactaire Monitoring System, as this was the only monitoring system having Internet connectivity known to be commercially available. There is no requirement for connectivity of the monitoring system to control the DH equipment, therefore, any combination of equipment having the required functionality will be accepted.

3.6.3 Humidity Control for Surface Preparation and Primer Application

Provide and utilize dehumidification equipment to maintain relative humidity at appropriate level to prevent prepared steel surfaces from corroding at all times during surface preparation through primer application. Failure of humidity control system, or failure to maintain proper conditions, during surface preparation stage may allow surface rusting, which will be rejected and require rework. All surfaces to be coated must meet all requirements at time of primer application. Failure of humidity control system during primer application stage will be cause for removal and replacement of all materials applied and cured while conditions were not as prescribed above.

3.6.4 Humidity Control for Application of Intermediate and Topcoats and Initial Curing

Provide and utilize dehumidification equipment to maintain relative humidity at the coldest steel surface in tank below 55 percent at all

times during coating application, and during the first four days of initial curing after application of topcoat. This measurement is not the same as measuring the relative humidity of ambient air in the tank, and will require either electronic equipment to monitor relative humidity at the steel surface, or complex calculations to convert relative humidity of air in tank to relative humidity at steel surface. An approved alternative method of monitoring dehumidification that requires less sophisticated equipment or calculations is to maintain a minimum dew point depression of 18 degrees F below coldest steel surface temperature. This is in lieu of specific relative humidity and dew point requirements in this Section. Failure to maintain specified humidity control during this phase will be cause for extension of humidity controlled cure time to ensure four consecutive days at specified relative humidity at steel surfaces. Formation of condensation in coating application stage prior to the indicated dry-hard time will be cause for removal and replacement of all materials contacted by condensation.

3.7 EQUIPMENT USED IN TANK

Equipment used in the tank after surface preparation begins shall not leave any oily residue from exhaust or other sources. Internal combustion driven equipment, other than that powered by natural or bottled gas, shall not be used.

3.8 SURFACES TO BE COATED

Prepare and repair coating of interior tank surfaces, including FLOOR, SHELL, and CEILING following all tank repairs and alterations. Do not install aluminum floating pan until all coating repairs completed.

3.9 PRE-PREPARATION

3.9.1 Surface Preparation Equipment

Use industrial hand equipment of conventional air, pneumatic or electric power for surface preparation. A handheld bristle blaster or equivalent is recommended method of preparation.

3.9.2 Surface Standard

Inspect repair area surfaces to be coated, and select plate with similar properties and surface characteristics for use as a surface standard. Cleanone or more 1 foot square steel panels as specified in paragraph SURFACE PREPARATION. Measure surface profile in accordance with ASTM D7127. When the surface standard complies with all specified requirements, seal with a clearcoat protectant. Use the surface standard for comparison to abrasive blasted surfaces throughout the course of work.

3.9.3 Pre-Preparation Testing for Surface Contamination

Perform surface preparation and testing in the prescribed order.

3.9.3.1 Pre-Preparation Testing for Oil and Grease Contamination

Inspect all surfaces for oil and/or grease contamination using two or more of the following inspection techniques:

a. Visual Inspection

Reject oil and/or grease contaminated surfaces, clean using a water based pH neutral degreaser in accordance with SSPC SP 1, and recheck for contamination until surfaces are free of oil and grease.

b. Water Break Test

Spray atomized mist of distilled water onto surface, and observe for water beading. If water "wets" surface rather than beading up, surface can be considered free of oil or grease contamination. Beading of water (water forms droplets) is evidence of oil or grease contamination.

c. Black Light Test

Inspect surfaces for oil and grease contamination using the light specified in the paragraph BLACK LIGHT. Use light no more than 15 inches from surface unless testing indicates that the specific oil or grease found in tank fluoresce at a greater distance. Use light in tank that is completely sealed from light infiltration, under a hood, or at night. Any fluorescing on steel surfaces is indication of petroleum oil/grease contamination. Use either WATER BREAK TEST or CLOTH RUB TEST to confirm both contaminated and non-contaminated areas detected by BLACK LIGHT TEST. The BLACK LIGHT TEST may not be used during inspection of prepared surfaces for oil and grease contamination unless proven to fluoresce the oil and/or grease found in the specific tank and documented during testing prior to surface preparation. Generally, only petroleum oil/grease will fluoresce, however, some may not fluoresce sufficiently to be recognized and other methods, such as the WATER BREAK TEST or CLOTH RUB TEST, must be used to confirm findings of the BLACK LIGHT TEST.

d. Cloth Rub Test

Rub a clean, white, lint free, cotton cloth onto surface and observe for discoloration. To confirm oil or grease contamination in lightly stained areas, a non-staining solvent may be used to aid in oil or grease extraction. Any visible discoloration is evidence of oil or grease contamination.

3.9.3.2 Pre-Preparation Testing for Soluble Salts Contamination

Test surfaces for soluble salts, and wash as required, prior to surface preparation. Soluble salt testing is also required in paragraph PRE-APPLICATION TESTING FOR SOLUBLE SALTS CONTAMINATION as a final acceptance test of prepared surfaces after surface preparation, and successful completion of this phase does not negate that requirement. This phase is recommended since pre-preparation testing and washing are generally more advantageous than attempting to remove soluble salt contamination after surface preparation. Effective removal of soluble salts will require removal of any barrier to the steel surface, including rust. The soluble salts remover shall be acidic, biodegradable, nontoxic, noncorrosive, and after application, will not interfere with primer adhesion. Delays between testing and preparation, or testing and coating application, may allow for the formation of new contamination. Use potable water, or potable water modified with a soluble salt remover, for all washing. Test methods and equipment used in this phase are selected at the Contractor's discretion.

3.9.4 Surface preparation

Hand remove existing coating at all repair surface areas and welds, extending surface preparation of coating removal, to at least 2 inches beyond work area to near-white metal in accordance with SSPC SP 10/NACE No. 2. Hand abrade or scuff the Fluoropolyurethane topcoat of existing coating left in tact around the repair area. Prepared surfaces shall conform to SSPC VIS 1 and shall match the prepared test-panels. Provide a 2 to 3 mil surface profile. Reject profile greater than 3 mils, and modify processes and materials to provide the specified profile. Measure surface profile in accordance with ASTM D7127, using Rmax as the measure of profile height. Record all measurements required in this standard. Measure profile at rate of three test areas for the first 1000 square feet plus one test area for each additional 1000 square feet or part thereof. When surfaces are prepped for any reason, retest profile as specified. Do not attempt to wipe surface clean.

3.9.5 Pre-Application Testing For Surface Contamination

3.9.5.1 Pre-Application Testing for Oil and Grease Contamination

Ensure tank surfaces requiring coating repair are free of contamination as described in paragraph PRE-PREPARATION TESTING FOR OIL AND GREASE CONTAMINATION.

3.9.5.2 Pre-Application Testing for Soluble Salts Contamination

Test surfaces for chloride contamination using the Test Kit described in paragraph TEST KIT FOR MEASURING CHLORIDE, SULFATE AND NITRATE IONS ON STEEL SURFACES. Test all surfaces at rate of three tests for the first 1000 square feet plus one test for each additional 2000 square feet or part thereof. Perform 30 percent of tests on bare steel at new welds, divided equally between horizontal and vertical welds. One or more readings greater than nondetectable for chlorides, sulfates, or nitrates is evidence of soluble salt contamination. Reject contaminated surfaces, wash as discussed in paragraph PRE-PREPARATION TESTING FOR SOLUBLE SALTS CONTAMINATION, allow to dry, and re-test until all required tests show allowable results. Reblast tested areas using vacuum equipped blast equipment. Label all test tubes and retain for test verification.

3.9.5.3 Pre-Application Testing for Surface Cleanliness

Apply coatings to dust free surfaces. To test surfaces, apply strip of clear adhesive tape to surface and rub onto surface with finger. When removed, the tape should show little or no dust or other contaminant. Reject contaminated surfaces, clean by vacuum cleaning, and retest. Test all bare metal repair surfaces one test for each repair area. Provide two additional tests for each failed test or questionable test. Attach test tapes to Daily Inspection Reports.

3.10 MIXING AND APPLICATION OF SEALANT AND COATING SYSTEM

Mix, thin, and apply in accordance with approved procedures, which may differ for each product. Do not mix partial kits or alter mix ratios.

3.10.1 Preparation of Sealant and Coating Materials for Application

Each of the different products, sealant, epoxy primer and epoxy intermediate is a two-component material supplied in separate containers.

3.10.1.1 Mixing Sealant, Primer and Intermediate Coat Materials

Mix materials in same temperature and humidity conditions specified in paragraph DELIVERY AND STORAGE. Allow mixed material to stand for the required induction time based on its temperature.

3.10.1.2 Pot Life

Apply mixed products within stated pot life for each product. Stop applying when material becomes difficult to apply in a smooth, uniform wet film. Do not add solvent to extend pot life. Add all required solvent at time of mixing. Pot life is based on standard conditions at 70 degrees F and 50 percent relative humidity. For every 18 degrees F rise in temperature, pot life is reduced by approximately half, and for every 18 degrees F drop, it is approximately doubled. Usable pot life depends on the temperature of the material at the time of mixing and the sustained temperature at the time of application. Other factors such as the shape of the container and volume of mixed material may also affect pot life. In hot climates, precooling or exterior icing of components for at least 24 hours to a minimum of 50 degrees F will extend pot life. Following are approximate pot life times:

Sealant	As specified by manufacturer
Epoxy Primer and Intermediate Coat Materials	4 hours

3.10.1.3 Application Conditions and Recoat Windows

The application condition requirements for the coating system are very time and temperature sensitive, and are intended to avoid the delamination problems frequently found on industrial structures. Plan coating application to ensure that specified temperature, humidity, and condensation conditions are met. If conditions do not allow for orderly application of sealant, primer, stripe coat, intermediate coat and topcoat, use appropriate means of controlling air and surface temperatures, as required. Partial or total enclosures, insulation, heating or cooling, or other appropriate measures may be required to control conditions to allow for orderly application of all required coats.

Maintain air and steel surface temperature between 60 and 100 degrees F during application and the first four hours of cure for epoxy coats and the first eight hours of cure for polyurethane coats.

Use Table entitled "RECOAT WINDOWS" to determine appropriate recoat windows for each coat after the initial coat. Apply each coat during appropriate RECOAT WINDOW of preceding coat. If a RECOAT WINDOW is missed, the minimum and maximum primer and intermediate coat thickness may be adjusted to accommodate a FILL COAT, however, requirements for total epoxy coating thickness and total coating thickness will not be modified. Missing more than one RECOAT WINDOW may require complete removal of coating if maximum total coating thickness requirements cannot be achieved.

If coating is not applied during RECOAT WINDOW, or if surface temperature exceeds 120 degrees F between applications, provide GLOSS REMOVAL, apply next coat within 24 hours. If next planned coat is topcoat, apply FILL COAT if required to fill sanding marks. Sanding marks from GLOSS REMOVAL of intermediate coat reflecting through topcoat will be considered as non-compliant. Apply FILL COAT within 24 hours of GLOSS REMOVAL, then apply topcoat within RECOAT WINDOW of FILL COAT.

RECOAT WINDOWS						
Temperature degrees F	60-70	71-80	81-90	91-100	101-110	111-120
EPOXY OVER EPOXY						
RECOAT WINDOW (Hrs.)	24-72	18-60	16-48	12-36	8-18	4-6
Temperature degrees F	60-70	71-80	81-90	91-100	101-110	111-120

The temperature ranges shown in the table above are for determining recoat windows. Choose recoat window based on the highest surface temperature that was sustained for one or more hours between coats. This applies to the entire time between coats. Measure and record air and surface temperatures on hourly basis to determine appropriate recoat windows. If surface temperature goes above 100 degrees F, measure and record temperatures every half hour.

FILL COAT - Where indicated, apply coat of intermediate coat epoxy, at 2 to 3 mils DFT, then apply next specified full coat within recoat window of FILL COAT. A FILL COAT may be used to adjust coating thickness to comply with requirements or to fill sanding marks in intermediate coat.

GLOSS REMOVAL - Where required, hand sand in a linear fashion to remove gloss using 120-200 grit wet/dry sandpaper, followed by solvent wiping with a clean rag soaked with denatured alcohol to remove all dust. GLOSS REMOVAL of primer coat is to scarify surface and shall consist of removal of approximately 1 mil of coating. If steel is exposed during GLOSS REMOVAL, repair in accordance with paragraph PROCEDURE FOR HOLIDAY AND SPOT REPAIRS OF NEWLY APPLIED COATING. GLOSS REMOVAL of intermediate coat may include removal of up to 3 mils of coating to avoid excess thickness, prior to application of FILL COAT.

3.10.2 Amine Blush Testing of Epoxy Coat Prior to Overcoating

Test epoxy surfaces prior to application of roof joint sealant, epoxy coat, or polyurethane topcoat for amine blush contamination using the Test Kit described in paragraph TEST KIT FOR IDENTIFYING AMINE BLUSH ON EPOXY SURFACES. Test all surfaces at rate of three tests for the first 1000 square feet plus one test for each additional 2000 square feet or part thereof. If one or more tests show positive results for amine blush contamination, either treat all surfaces using the approved amine blush removal procedure or increase testing to ensure that all contamination is located, and then treat identified contamination using the approved procedure.

3.10.3 Application of Coating System and Roof Joint Sealant

Blend all coating applications over the scuffed area of existing coating adjacent to the coating repair area. Do not apply epoxy to non-abraded fluoropolyurethane as it will not adhere properly.

Apply coatings in accordance with SSPC PA 1 and as specified herein. Apply sealant and coatings to surfaces that meet all stated surface preparation requirements.

After application of primer coat and prior to application of each subsequent coat, perform testing prescribed in paragraph PRE-APPLICATION TESTING FOR SURFACE CONTAMINATION, as necessary, to ensure minimal intercoat contamination. This testing may be reduced to one half of the prescribed rate for bare steel if the testing indicates no contamination when sampling is evenly distributed over surfaces being tested. If contamination is found between coats, revert to the specified testing rate. Generally, oil and grease contamination and soluble salts contamination are not encountered if subsequent coats are applied within specified recoat windows and the quality of air entering tank is controlled. Concern for intercoat contamination should be continually prevalent, and spot testing should be accomplished to verify satisfactory conditions. Where visual examination or spot testing indicates contamination, perform sufficient testing to verify non-contamination, or to define extent of contamination for appropriate treatment.

Apply each coat in a consistent wet film, at 90 degrees to previous coat. Ensure that primer and intermediate coat "cold joints" are no less than six inches from welds. Apply stripe coat by brush. For convenience, stripe coat material may be delivered by spray if followed immediately with brush-out and approved procedures include appropriate controls on thickness. Apply all other coats by spray application. The cleanliness, temperature, recoat windows, and airborne paint containment requirements may necessitate the use of portable shelters or other appropriate controls.

Apply coatings at the following specified thickness or to match approximate thickness of surrounding existing coating:

Coat	Minimum Mils DFT	Maximum Mils DFT
Primer	3	5
Intermediate	3	5
Top	2	4
Total system	8	14

Measure coating thickness in accordance with SSPC PA 2 to confirm that coating application is within the specified range and within the tolerances of that standard. For non-compliant areas, increase number of test areas to identify all non-compliant application as required by SSPC PA 2.

3.10.3.1 Application of Roof Joint Sealant

Apply sealant to the roof-to-shell joint, to all roof plate lap joints, and to roof-to-rafter joints up to 1 inch gap to exclude moisture from these marginally prepared crevice areas. Allow sealant to cure according to manufacturer's instructions prior to application of the stripe coat.

3.10.3.2 Application of Stripe Coat

Apply stripe coat of epoxy primer material prior to application of general primer coat on CEILING and SHELL repair areas. Apply stripe coat of epoxy intermediate coat material after application of general primer coat on FLOOR. Where stripe coat is applied to areas of joint sealant, allow

appropriate curing time for joint sealant. Apply stripe coat by brush, working the material into corners, crevices, pitted areas, and welds, and onto outside corners and angles. Where roof-to-rafter joints exceed 1 inch gap and roof joint sealant was not applied, use appropriate application tools to provide "best effort" coating of all exposed steel surfaces in the gap. Mini-rollers or other tools may be required.

3.10.3.3 Application of Epoxy Primer

Apply primer coat within RECOAT WINDOW of stripe coat.

3.10.3.4 Application of Intermediate Coat

Apply intermediate coat within RECOAT WINDOW of primer coat.

3.10.3.5 Application of Epoxy Topcoat

Make all required repairs to primer and intermediate coats as specified in paragraph entitled "Procedure for Holiday and Spot Repairs of Newly Applied Coating" prior to applying topcoat. Apply topcoat within RECOAT WINDOW of intermediate coat. Consult manufacturer for application procedures for anticipated temperature and humidity conditions. Touch-up blemishes and defects within recoat window of epoxy topcoat.

3.10.4 Holiday Testing

No sooner than 48 hours after application of the topcoat, perform holiday testing only of coating repair areas in accordance with the low voltage wet sponge method of NACE SP0188. Repair holidays per paragraph entitled "Procedure for Holiday and Spot Repairs of Newly Applied Coating." Do not allow moisture from sponge to remain on the coated surfaces more than ten minutes. Remove excess moisture with a clean rag when testing fluoropolyurethane topcoat.

3.10.5 Procedure for Holiday and Spot Repairs of Newly Applied Coating

Repair coating film defects at the earliest practicable time, preferably before application of the succeeding coat. Observe all requirements for soluble salts contamination, cleanliness between coats, and application conditions. Prepare defective area in accordance with SSPC SP 10/NACE No. 2, and feather coating as required to leave 4 inches of each succeeding coat feathered and abraded. Protect adjacent areas from damage and overspray. Remove dust and solvent wipe the prepared area plus an additional 4 inches beyond the prepared area with clean denatured alcohol. Apply each coat within RECOAT WINDOW of preceeding coat. Within four hours of preparation, apply primer to prepared steel and feather onto prepared primer. Apply intermediate coat to primed area and feather to prepared intermediate area. Apply topcoat to intermediate coat and feather to prepared topcoat. Apply each repair coat to approximate thickness of surrounding coating system. The limit on FLOOR repairs includes repairs made before and after floating pan installation.

3.10.6 Tank Occupancy After Coating Application

Use clean canvas, or other approved, shoe covers when walking on coated surfaces, regardless of curing time allowed. For heavily trafficked areas, provide cushioned mats for additional protection.

3.10.7 Extended Cure of Coating System Prior to Immersion Service

Allow a cure time of 12 days after the final coating material has been applied before beginning installation of the floating pan.

3.11 PROJECT IDENTIFICATION

At the completion of the tank work, stencil the following information on the exterior of the tank adjacent to the main manway opening in 3/4 to one inch Helvetica style letters of contrasting color using acrylic stencil paint:

Date Interior coated:
Project Number:
Contractor:
Address:
Coating System
  Surface Prep: SSPC SP __ Profile: ____
  Primer: _____ Thickness: ____
  Intermediate: _____ Thickness: ____
  Topcoat: _____ Thickness: ____
  Total Thickness: ____

3.12 FIELD QUALITY CONTROL

Project documentation, including inspection and testing records, shall be used to determine the Contractor's compliance with contract requirements and approved procedures. The Contractor's certifications of completion, for both invoices and for project completion, shall be based on documented evidence of compliance with all requirements and approved Coating Work Plan procedures. Track inspections and tests in the Test Plan & Log.

3.12.1 Coating Inspector

The coating inspector shall be considered a QC Specialist and shall report to the QC Manager, as specified in Section 01 45 00.00 20 NAVFAC QUALITY CONTROL. The Coating Inspector shall be present during all pre-preparation testing, surface preparation, coating application, initial cure of the coating system, during all coating repair work, and during completion activities as specified in Section 01 45 00.00 20 NAVFAC QUALITY CONTROL. The Coating Inspector shall provide complete documentation of conditions and occurrences on the job site, and be aware of conditions and occurrences that are potentially detrimental to the coating system. The requirements for inspection listed in this Section are in addition to the QC inspection and reporting requirements specified in Section 01 45 00.00 20 NAVFAC QUALITY CONTROL.

3.12.2 Field Inspection

3.12.2.1 Inspection and Documentation Requirements

Perform field inspection in accordance with ASTM D3276 and the approved Coating Work Plan. Document Contractor's compliance with the approved Coating Work Plan.

Provide all tools and instruments required to perform the required testing, as well as any tools or instruments that the inspector considers necessary to perform the required inspections and tests. Document each inspection and test, including required hold points and other required

inspections and tests, as well as those inspections and tests deemed prudent from on-site evaluation to document a particular process or condition, as follows:

a. Location or area

b. Purpose (required or special)

c. Method

d. Criteria for evaluation

e. Results

f. Determination of compliance

g. List of required rework

h. Observations

Collect and record Environmental Conditions as described in ASTM D3276 on a 24 hour basis, as follows:

a. During surface preparation, every two hours or when changes occur;

b. During coating application and the first four days of initial cure, every hour, or when changes occur;

c. Note location, time, and temperature of the highest and lowest surface temperatures each day;

d. Use a non-contact thermometer to locate temperature extremes, then verify with contact thermometers.

NOTE: Data collected on Environmental conditions in paragraph AUTOMATED MONITORING REQUIREMENTS may be used for overnight data, however, the data must be constantly verified as to location of sensors and validity of data with respect to the coating work being accomplished.

Document all equipment used in inspections and testing, including manufacturer, model number, serial number, last calibration date and future calibration date, and results of on-site calibration performed. Work documented using data from equipment found to be out of calibration shall be considered as non-compliant since last calibration or calibration check, as required.

3.12.2.2 Inspection Report Forms

Develop project-specific report forms as required to report measurement and test results and observations being complete and compliant with contract requirements. This includes all direct requirements of the contract documents and indirect requirements of referenced documents. Show acceptance criteria with each requirement and indication of compliance of each inspected item. Annotation of non-compliance shall be conspicuous so as to facilitate identification and transfer to the Rework Log. Report forms shall include requirements and acceptance and rejection criteria, and shall be legible and presented so that entered data can be quickly compared to the appropriate requirement.

3.12.2.3 Daily Inspection Reports

Submit one copy of daily inspection report completed each day when performing work under this Section, to the Contracting Officer. Note all non-compliance issues, and all issues that were reported for rework in accordance with QC procedures of Section 01 45 00.00 20 NAVFAC QUALITY CONTROL. Each report shall be signed by the coating inspector and the QC Manager. Submit report within 24 hours of date recorded on the report.

3.12.2.4 Inspection Logbook

A continuous record of all activity related to this Section shall be maintained in an Inspection Logbook on a daily basis. The logbook shall be hard or spiral bound with consecutively numbered pages, and shall be used to record all information provided in the Daily Inspection Reports, as well as other pertinent observations and information. The Coating Inspector's Logbook that is sold by NACE is satisfactory. Submit the original Inspection Logbook to the Contracting Officer upon completion of the project and prior to final payment.

3.12.3 Inspection Equipment

All equipment shall be in good condition, operational within its design range, and calibrated as required by the specified standard for use of each device.

3.12.3.1 Black Light

Use a black light having a 365 nanometer intensity of 4,000 microwatts per square centimeter minimum at 15 inches. The Spectroline BIB-150P from Spectronics Corporation satisfies this requirement.

3.13 FINAL CLEANUP

Following completion of the work, remove debris, equipment, and materials from the site. Remove temporary connections to Government or Contractor furnished water and electrical services. Restore existing facilities in and around the work areas to their original condition.

TABLE I

COATING QUALITY CONFORMANCE INSPECTION REQUIREMENTS

Table Ia. - Epoxy Primer Coat MIL-DTL-24441/29 Formula 150 Type IV (Green)

Test	Component A		Component B		Mixed	
	Min.	Max.	Min.	Max.	Min.	Max.
Pigment content, percent	45.0	50.0	35.0	40.0	---	---
Volatiles, percent	29.0	35.0	15.0	20.0	---	---
Non-volatiles vehicle, percent	17.5	23.5	43.0	28.0	---	---
Course particles, percent	---	.03	---	.03	---	---
Consistency, grams	300	410	470	600	260	410
Weight						
Kilograms / liter	1.33	1.39	1.33	1.39	1.33	1.39
Pounds / gallon	11.1	11.6	11.1	11.6	11.1	11.6
Set to touch, hours at 23 degrees C, 73 degrees F	---	---	---	---	---	3
Dry-hard time, hours at 23 degrees C, 73 degrees F	---	---	---	---	---	6
Fineness of grind, Hegman	3	---	2	---	---	---
Flashpoint						
Degrees C	35.5	---	37.8	---	---	---
Degrees F	96	---	100	---	---	---
Titanium Dioxide, percent of pigment	18	---	---	---	---	---
Pot life, hours at 23 degrees C, 73 degrees F	---	---	---	---	4	---
Sag resistance						
Micrometers	---	---	---	---	300	---
Mils	---	---	---	---	12	---
Color of dry film to approximate color of FED-STD-595 color 24272	---	---	---	---	---	Conform

TABLE I

COATING QUALITY CONFORMANCE INSPECTION REQUIREMENTS

Table Ia. - Epoxy Primer Coat MIL-DTL-24441/29 Formula 150 Type IV (Green)

Test	Component A		Component B		Mixed	
	Min.	Max.	Min.	Max.	Min.	Max.
Contrast ratio at 75 micrometers, 3 mils DFT	---	---	---	---	0.98	---
VOC						
Grams / liter	---	---	---	---	---	340
Pounds / gallon	---	---	---	---	---	2.8

GENERAL NOTES:
Test methods as specified in MIL-DTL-24441.
Where "Conform" is indicated, refer to specific requirements of MIL-DTL-24441/29.

TABLE I

COATING QUALITY CONFORMANCE INSPECTION REQUIREMENTS

Table Ib. - Epoxy Intermediate Coat MIL-DTL-24441/31 Formula 152 Type IV (White (Tinted))

Test	Component A		Component B		Mixed	
	Min.	Max.	Min.	Max.	Min.	Max.
Pigment content, percent	44.0	49.0	33.0	38.0	---	---
Volatiles, percent	29.0	35.0	16.0	21.0	---	---
Non-volatiles vehicle, percent	17.5	23.5	44.0	49.0	---	---
Course particles, percent	---	0.3	---	0.3	---	---
Consistency, grams	180	320	300	470	180	245
Weight						
Kilograms / liter	1.39	1.45	1.29	1.35	1.34	1.40
Pounds / gallon	11.6	12.1	10.8	11.3	11.2	11.7
Set to touch, hours at 23 degrees C, 73 degrees F	---	---	---	---	---	3
Dry-hard time, hours at 23 degrees C, 73 degrees F	---	---	---	---	---	8
Fineness of grind, Hegman	4	---	4	---	---	---
Flashpoint						
Degrees C	35.5	---	37.8	---	---	---
Degrees F	96	---	100	---	---	---
Titanium Dioxide, percent of pigment	91	---	---	---	---	---
Pot life, hours at 23 degrees C, 73 degrees F	---	---	---	---	4	---
Sag resistance						

TABLE I

COATING QUALITY CONFORMANCE INSPECTION REQUIREMENTS

Table Ib. - Epoxy Intermediate Coat MIL-DTL-24441/31 Formula 152 Type IV (White (Tinted))

Test	Component A		Component B		Mixed	
	Min.	Max.	Min.	Max.	Min.	Max.
Micrometers	---	---	---	---	300	---
Mils	---	---	---	---	12	---
Color of dry film to approximate color of FED-STD-595 color 27778	---	---	---	---	---	Conform
Contrast ratio at 75 micrometers, 3 mils DFT	---	---	---	---	0.98	---
Gloss, 60 degree specular	---	---	---	---	35	---
VOC						
Grams / liter	---	---	---	---	---	340
Pounds / gallon	---	---	---	---	---	2.8

GENERAL NOTES:
Test methods as specified in MIL-DTL-244441.
Where "Conform" is indicated, refer to specific requirements of MIL-DTL-24441/31.

Note: Purge Component B with dry nitrogen before sealing container.

Manufacturing Note - Disperse the pigment and thixotrope used in Component A with a high speed dispersion mixer to a North Standard 5 on a Hegman gauge, using as much of the resin and solvent blend as required for a good working viscosity. To prevent deformation of the PTFE pigment particles, add the chosen Poly(tetrafluoroethylene) to the dispersed material following the grind operation, under moderate agitation to separate the particles using the remaining resin and solvent. Agitate until complete separation of the PTFE has been accomplished. Add any remaining resin and

solvent to completion.

Availability Note - Contact 21st Century Coatings America, Inc., Chevy Chase, MD, phone (301) 657-6230 or (301) 654-0099, facsimile (301) 657-6234 for the current list of approved manufacturers.

Manufacturers typically require payment for this material prior to ordering raw materials for production and/or manufacturing.

-- End of Section --

SECTION 09 97 13.17

THREE COAT EPOXY INTERIOR COATING OF WELDED STEEL PETROLEUM FUEL TANKS
02/10

PART 1 GENERAL

1.1 REFERENCES

The publications listed below form a part of this specification to the extent referenced. The publications are referred to within the text by the basic designation only.

AMERICAN PETROLEUM INSTITUTE (API)

API Std 653	(2009; Addendum 1 2010; Addendum 2 2012; Addendum 3 2013) Tank Inspection, Repair, Alteration, and Reconstruction

ASTM INTERNATIONAL (ASTM)

ASTM D3276	(2007) Painting Inspectors (Metal Substrates)
ASTM D3925	(2002; R 2010) Sampling Liquid Paints and Related Pigmented Coatings
ASTM D4285	(1983; R 2012) Indicating Oil or Water in Compressed Air
ASTM D7127	(2013) Measurement of Surface Roughness of Abrasive Blast Cleaned Metal Surfaces using a Portable Stylus Instrument

INTERNATIONAL ORGANIZATION FOR STANDARDIZATION (ISO)

ISO 9001	(2008; Corr 1 2009) Quality Management Systems- Requirements

NACE INTERNATIONAL (NACE)

NACE SP0178	(2007) Design, Fabrication, and Surface Finish Practices for Tanks and Vessels to be for Immersion Service
NACE SP0188	(1999; R 2006) Discontinuity (Holiday) Testing of New Protective Coatings on Conductive Substrates

THE SOCIETY FOR PROTECTIVE COATINGS (SSPC)

SSPC 7/NACE No.4	(2007; E 2004) Brush-Off Blast Cleaning
SSPC AB 2	(1996; E 2004) Cleanliness of Recycled Ferrous Metallic Abrasive
SSPC AB 3	(2003; E 2004) Ferrous Metallic Abrasive

SSPC Guide 12	(1998; E 2004) Guide for Illumination of Industrial Painting Projects
SSPC PA 1	(2000; E 2004) Shop, Field, and Maintenance Painting of Steel
SSPC PA 2	(2012) Measurement of Dry Coating Thickness With Magnetic Gages
SSPC QP 1	(1998; E 2004) Standard Procedure for Evaluating Painting Contractors (Field Application to Complex Industrial Structures)
SSPC QP 5	(1999; E 2004) Standard Procedure for Evaluating the Qualifications of Coating and Lining Inspection Companies
SSPC QS 1	(2004) Standard Procedure for Evaluating a Contractor's Advanced Quality Management System
SSPC SP 1	(1982; E 2004) Solvent Cleaning
SSPC SP 10/NACE No. 2	(2007) Near-White Blast Cleaning
SSPC SP COM	(2004) Surface Preparation Commentary for Steel and Concrete Substrates
SSPC VIS 1	(2002; E 2004) Guide and Reference Photographs for Steel Surfaces Prepared by Dry Abrasive Blast Cleaning

U.S. DEPARTMENT OF DEFENSE (DOD)

MIL-A-22262	(1993; Rev B; Am 2 1996) Abrasive Blasting Media Ship Hull Blast Cleaning
MIL-DTL-24441	(2009; Rev D) Paint, Epoxy-Polyamide, General Specification for
MIL-DTL-24441/29	(2009; Rev B) Paint, Epoxy-Polyamide, Green Primer, Formula 150, Type IV
MIL-DTL-24441/31	(2009; Rev B) Paint, Epoxy-Polyamide, White, Formula 152, Type IV

U.S. GENERAL SERVICES ADMINISTRATION (GSA)

FED-STD-595	(Rev C; Notice 1) Colors Used in Government Procurement

U.S. NATIONAL ARCHIVES AND RECORDS ADMINISTRATION (NARA)

29 CFR 1910.1000	Air Contaminants
29 CFR 1910.134	Respiratory Protection
29 CFR 1926.59	Hazard Communication

1.2 SUBMITTALS

Government approval is required for submittals with a "G" designation; submittals not having a "G" designation are for Contractor Quality Control approval. The following shall be submitted in accordance with Section 01 33 00 SUBMITTAL PROCEDURES:

SD-05, Design Data

Environmental Control System

SD-06 Test Reports

Metallic Abrasive Qualification Test Reports

Coating Sample Test Reports

Abrasive Sample Test Reports

Inspection Report Forms

Daily Inspection Reports

Recycled Metallic Abrasive Field Test Reports (Daily and Weekly)

SD-07 Certificates

Contract Errors, Omissions, and Other Discrepancies

Corrective Action Procedures

Coating Work Plan

Qualifications of Certified Industrial Hygienist (CIH)

Qualifications Of Individuals Performing Abrasive Blasting

Qualifications of Certified Protective Coatings Specialist (PCS)

Qualifications of Coating Inspection Company

Qualifications of QC Specialist Coating Inspector

Qualifications of Testing Laboratory for Coatings

Qualifications of Testing Laboratory for Abrasive

Qualifications of Coating Contractors

Epoxy Coating Materials; G

Non-metallic Abrasive

Metallic Abrasive

SD-08 Manufacturer's Instructions

Coating System Instructions

SD-11 Closeout Submittals

Disposal of Used Abrasive

Inspection Logbook; G

1.3 QUALITY ASSURANCE

1.3.1 Contract Errors, Omissions, and Other Discrepancies

Submit all errors, omissions, and other discrepancies in contract documents the Contracting Officer within 30 days of contract award for all work covered in this Section, other than the work that will not be uncovered until a later date. All such discrepancies shall be addressed and resolved, and the Coating Work Plan modified, prior to beginning the Initial and Follow-Up phases of work. Discrepancies that become apparent only after work is uncovered shall be identified at the earliest discoverable time and submitted for resolution. Schedule time (Float) should be built into the project schedule at those points where old work is to be uncovered or where access is not available during the first 30 days after award, to allow for resolution of contract discrepancies.

1.3.2 Corrective Action (CA)

CA shall be included in the Quality Control Plan.

1.3.2.1 Corrective Action Procedures

Develop procedures for determining the root cause of each non-compliance, developing a plan to eliminate the root cause so that the non-compliance does not recur, and following up to ensure that the root cause was eliminated. Develop Corrective Action Request (CAR) forms for initiating CA, and for tracking and documenting each step.

1.3.2.2 Implement Corrective Action

The Contractor shall take action to identify and eliminate the root cause of each non-compliance so as to prevent recurrence. These procedures shall apply to non-compliance in the work, and to non-compliance in the QC System. Corrective actions shall be appropriate to the effects of the non-compliance encountered. Each CAR shall be serialized, tracked in a Log to completion and acceptance by the Contracting Officer, and retained in project records. The Corrective Action Log, showing status of each CAR, shall be submitted to the Contracting Officer monthly. A CAR may be initiated by either the Contractor or the Contracting Officer. The Contracting Officer must approve each CAR at the root cause identification stage, the plan for elimination stage, and the close out stage after verification that the root cause has been eliminated.

1.3.3 Coating Work Plan

This work plan shall be considered as part of the Quality Control Plan.

Provide procedures for reviewing contract documents immediately after award to identify errors, omissions, and discrepancies so that any such issues can be resolved prior to project planning and development of detailed procedures.

Provide procedures for verification of key processes during Initial Phase to ensure that contract requirements can be met. Key processes shall include surface preparation, coating application and curing, inspection, and documentation, and any other process that might adversely impact orderly progression of work.

Provide procedures for all phases of coating operations, including planned work, rework, repair, inspection, and documentation. Address mobilization and setup, surface preparation, coating application, coating initial cure, tracking and correction of non-compliant work, and demobilization. Coordinate work processes with health and safety plans and confined space entry plans. For each process, provide procedures that include appropriate work instructions, material and equipment requirements, personnel qualifications, controls, and process verification procedures. Provide procedures for inspecting work to verify and document compliance with contract requirements, including inspection forms and checklists, and acceptance and rejection criteria.

Provide procedures for correcting non-compliant work. Detailed procedures are required in advance to avoid delays in meeting overcoat windows as well as to avoid delays in production. Provide procedures for repairing defects in the coating film, such as runs, drips, sags, holidays, overspray, as well as how to correct coating thickness non-compliance, any other areas of repair or rework that might be adversely affected by delays in preparing and approving new procedures.

If a procedure is based on a proposed or approved request for deviation, the deviation shall be referenced. Changes to procedures shall be noted by submittal number and date approved, clearly delineating old requirements and new requirements, so that the records provide a continuous log of requirements and procedures.

1.3.4 Design Data

1.3.4.1 Environmental Control System

Submit design details of the proposed environmental control system to include ventilation, humidity control, and temperature regulation. Provide calculations for humidity control during separate surface preparation and coating application procedures, ventilation requirements during coating application, and maximum allowable coating application rates to coincide with ventilation. Include basis of design data on local conditions. Provide equipment layout sketches and procedures showing function of each piece of equipment and fail-safe measures. A Certified Industrial Hygienist shall approve calculations, work procedures and personal protective equipment.

1.3.5 Test Reports

1.3.5.1 Metallic Abrasive Qualification Test Reports

Submit results for abrasive as required in paragraph 4 REQUIREMENTS of SSPC AB 3. Submit test results from independent laboratory of representative samples of each abrasive to be used on the jobsite. Samples must have been tested within the last three years. Note that this testing is for the purpose of prequalifying the abrasive.

1.3.5.2 Recycled Metallic Abrasive Field Test Reports (Daily and Weekly)

Submit test results from independent laboratory of daily and weekly Quality Control testing required by SSPC AB 2, as modified in paragraph ABRASIVE.

1.3.6 Qualifications

1.3.6.1 Qualifications of Certified Industrial Hygienist (CIH)

Submit name, address, telephone number, FAX number, and e-mail address of the independent third party CIH. Submit documentation that hygienist is certified by the American Board of Industrial Hygiene in comprehensive practice, including certification number and date of certification/recertification. Provide evidence of experience with hazards involved in industrial coating application work.

1.3.6.2 Qualifications of Certified Protective Coatings Specialist (PCS)

Submit name, address, telephone number, FAX number, and e-mail address of the independent third party PCS. Submit documentation that specialist is certified by SSPC: The Society for Protective Coatings (SSPC) as a PCS, including certification number and date of certification/recertification. If the PCS is employed by the same coating inspection company to which the coating inspector is employed, this does not violate the independent third-party requirements. The PCS shall remain certified during the entire project, and the Contracting Officer shall be notified of any change in certification status within 10 days of the change. The PCS shall not be the designated coating inspector.

1.3.6.3 Qualifications of Coating Inspection Company

Submit documentation that the coating inspection company that will be performing all coating inspection functions is certified by SSPC to the requirements of SSPC QP 5 prior to contract award, and shall remain certified while accomplishing any coating inspection functions. The coating inspection company must remain so certified for the duration of the project. If a coating inspection company's certification expires, the firm will not be allowed to perform any inspection functions, and all surface preparation and coating application work must stop, until the certification is reissued. Requests for extension of time for any delay to the completion of the project due to an inactive certification will not be considered and liquidated damages will apply. Notify the Contracting Officer of any change in coating inspection company certification status.

1.3.6.4 Qualifications of QC Specialist Coating Inspector

Submit documentation that each coating inspector is employed, and qualified to SSPC QP 5, Level III, by the selected coating inspection company. Each inspector shall remain employed by the coating inspection company while performing any coating inspection functions.

1.3.6.5 Qualifications Of Individuals Performing Abrasive Blasting

Submit name, address, and telephone number of each person that will be performing abrasive blasting. Submit documentation that each blaster is qualified by SSPC to the SSPC C-7 Dry Abrasive Blaster Qualification Program. Each blaster shall remain qualified during the entire period of abrasive blasting, and the Contracting Officer shall be notified of any change in qualification status.

1.3.6.6 Qualifications of Testing Laboratory for Coatings

Submit name, address, telephone number, FAX number, and e-mail address of the independent third party laboratory selected to perform testing of coating samples for compliance with specification requirements. Submit documentation that laboratory is regularly engaged in testing of paint samples for conformance with specifications, and that employees performing testing are qualified.

1.3.6.7 Qualifications of Testing Laboratory for Abrasive

Submit name, address, telephone number, FAX number, and e-mail address of the independent third party laboratory selected to perform testing of abrasive for compliance with specification requirements. Submit documentation that laboratory has experience in testing samples of abrasive for conformance with specifications, and that employees performing testing are qualified.

1.3.6.8 Qualifications of Coating Contractors

All Contractors and Subcontractors that perform surface preparation or coating application shall be certified to either ISO 9001 or SSPC QP 1 and SSPC QS 1 prior to contract award, and shall remain certified while accomplishing any surface preparation or coating application. The painting Contractors and painting Subcontractors must remain so certified for the duration of the project. If a Contractor's or Subcontractor's certification expires, the firm will not be allowed to perform any work until the certification is reissued. Requests for extension of time for any delay to the completion of the project due to an inactive certification will not be considered and liquidated damages will apply. Notify the Contracting Officer of any change in Contractor certification status.

1.3.6.9 Epoxy Coating Materials

Provide manufacturer's certification that the epoxy lining materials are currently approved by the Naval Sea Systems Command and listed on the Qualified Products Lists (QPL) for the specified materials.

1.3.6.10 Non-metallic Abrasive

Provide manufacturer's certification that the materials are currently approved by the Naval Sea Systems Command and listed on the Qualified Products Lists (QPL) for the specified materials.

1.3.6.11 Metallic Abrasive

Provide manufacturer's certification of conformance to contract requirements and provide copies of test results.

1.3.7 Protective Coating Specialist (PCS)

The PCS shall be considered a QC Specialist and shall report to the QC Manager, as specified in Section 01 45 00.00 20 NAVFAC QUALITY CONTROL. The PCS shall approve all submittals prior to submission to the QC Manager for approval or submission to the government for approval.

1.3.8 Pre-Application Meeting

After approval of submittals but prior to the initiation of coating work, Contractor representatives, including at a minimum, project superintendent and QC manager, paint foreman, coating inspector, and PCS shall have a pre-application coating preparatory meeting. This meeting shall be in addition to the pre-construction conference. Specific items addressed shall include: corrective action requirements and procedures, coating work plan, safety plan, coordination with other Sections, inspection standards, inspection requirements and tools, test procedures, environmental control system, safety plan, and test logs. Notify Contracting Officer at least ten days prior to meeting.

1.4 PRODUCT DATA

1.4.1 Coating System Instructions

Submit manufacturer's printed instructions including detailed mixing and application procedures, number and types of coats required, minimum and maximum application temperatures, and curing procedures. Include Materials Safety Data Sheets (MSDS) for materials to be used at the job site in accordance with 29 CFR 1926.59.

1.5 DELIVERY AND STORAGE

Ship, store, and handle materials in accordance with SSPC PA 1, and as modified in this Section. Maintain temperature in storage spaces between 40 and 75 degrees F, and air temperature more than 5 degrees F above the dew-point at all times. Inspect materials for damage prior to use and return non-compliant materials to manufacturer. Remove materials with expired shelf life from government property immediately and notify the Contracting Officer.

If materials are approaching shelf life expiration and an extension is desired, samples may be sent to the manufacturer, along with complete records of storage conditions, with a request for shelf life extension. If the manufacturer finds the samples and storage data suitable for shelf life extension, the manufacturer may issue an extension, referencing the product evaluation and the review of storage records. Products may not be extended longer than allowed in the product specification.

1.6 COATING HAZARDS

Ensure that employees are trained in all aspects of the safety plan. Specified coatings may have potential health hazards if ingested or improperly handled. The coating manufacturer's written safety precautions shall be followed throughout mixing, application, and curing of the coatings. During tank cleaning, cleanup, surface preparation, and paint application phases, ensure that employees are protected from toxic and hazardous chemical agents which exceed concentrations in 29 CFR 1910.1000. Comply with respiratory protection requirements in 29 CFR 1910.134. The CIH shall approve work procedures and personal protective equipment.

1.7 WORK SEQUENCE

Coat tank interior following tank tightness testing.

1.8 JOB SITE REFERENCES

Make available to the Contracting Officer at least one copy each of API Std 653, ASTM D3276, ASTM D3925, ASTM D4285, ASTM D7127, NACE SP0178 and companion visual comparator, NACE SP0188, SSPC SP COM, SSPC SP 1, SSPC 7/NACE No.4, SSPC SP 10/NACE No. 2, SSPC PA 1, SSPC PA 2, SSPC Guide 12, SSPC VIS 1, SSPC QP 1, SSPC QS 1, and an SSPC Certified Contractor Evaluation Form at the job site.

PART 2 PRODUCTS

2.1 COATING SYSTEM

Alternate systems or products will not be considered. All primer, intermediate, and topcoat materials shall be manufactured by one manufacturer.

2.1.1 Epoxy Primer, Intermediate, and Topcoats

The epoxy coating materials shall be approved by the Naval Sea Systems Command and listed on their current Qualified Products List (QPL) for the specified materials.

2.1.1.1 Epoxy Primer Coat

Epoxy polyamide, MIL-DTL-24441/29 (Formula 150, Type IV, Green).

2.1.1.2 Epoxy Intermediate Coat

Epoxy polyamide, MIL-DTL-24441/31 (Formula 152, Type IV, White (Tinted)). Tint to approximately FED-STD-595 color number 27778 parchment using pigment dispersions prepared for epoxy paint tinting. Manufacturer shall tint material and appropriately label. All other requirements of this Military Specification apply.

2.1.1.3 Epoxy Topcoat

Epoxy polyamide, MIL-DTL-24441/31 (Formula 152, Type IV, White).

2.2 COATING SAMPLE COLLECTION AND SHIPPING KIT

Provide a kit that contains one quart can for the base of each coating material, an appropriately sized can for each activator, dipping cups for each component to be sampled, a shipping box sized for the samples to to be shipped, and packing material. Mark cans for the appropriate component. Provide shipping documents, including either pre-paid shipping or a shipper number that can be used by the QC Manager to arrange pickup, addressed to the approved coating testing laboratory.

2.3 ABRASIVE SAMPLE COLLECTION AND SHIPPING KIT

Provide a kit that contains one suitable plastic bag or container for each sample to be collected. Mark containers for the appropriate component. Provide shipping documents, including either pre-paid shipping or a shipper number that can be used by the QC Manager to arrange pickup, addressed to the approved coating testing laboratory.

2.4 TEST KITS

2.4.1 Test Kit for Measuring Chloride, Sulfate and Nitrate Ions on Steel and Coated Surfaces

Provide test kits called CHLOR*TEST CSN Salts, as manufactured by CHLOR*RID International Inc. of Chandler, Arizona (www.chlor-rid.com) or equal. An "equal" test kit shall meet the following requirements:

a. Kit contains all materials,supplies, tools and instructions for field testing and on-site quantitative evaluation of chloride, sulfate and nitrate ions;

b. Kit extract solution is acidic, factory pre-measured, pre-packaged, and of uniform concentration;

c. Kit components and solutions are mercury free and environmentally friendly;

d. Kit contains new materials and solutions for each test extraction;

e. Extraction test container (vessel, sleeve, cell. etc.) creates a sealed, encapsulated environment during salt ion extraction;

f. Test extract container is suitable for testing the following steel surfaces: horizontal (up/down configuration), vertical, flat, curved, smooth, pitted, and rough;

g. All salt ion concentrations are directly measured in micrograms per square centimeter.

2.4.2 Test Kit for Identifying Amine Blush on Epoxy Surfaces

After coating and/or primer has hardened and prior to applying the next coat, test for unreacted amines using the AMINE BLUSH CHECK, manufactured by Elcometer, Rochester Hills, Michigan, or equal. To be considered for approval as an "equal" test kit it shall meet the following requirements:

a. Be a completely self-contained field test kit with all materials, supplies, tools and instructions to perform tests and indicate the presence of unreacted amines;

b. Use an identifiable, consistent, uniform, pre-packaged, factory pre-measured indicating solution;

c. Kit contains no mercury or lead and is environmentally friendly;

d. Kit contains a solution of an unreacted amine for the purpose of "self checking" the indicator solution;

2.5 ABRASIVE

The referenced abrasive specifications have maximum limits for soluble salts contamination, however, this maximum level of contamination does not guarantee that contamination will not be transferred to the steel surface during abrasive blasting. Other factors such as on-site handling and recycling can allow contamination of abrasive. Contractors are cautioned to verify that the chosen abrasive, along with work and storage processes, allow the final surface cleanliness requirements to be achieved.

Successful testing of chlorides in abrasive does not negate the final acceptance testing of steel surfaces.

2.5.1 Non-metallic Abrasive

Conform to MIL-A-22262, Type I (Inorganic materials). Abrasive shall be approved by the Naval Sea Systems Command and listed on the appropriate Qualified Products List (QPL) for the specified materials. Use sampling procedures and testing frequencies as prescribed in MIL-A-22262. Use abrasive that is specifically selected and graded to provide a sharp, angular profile to the specified depth. Do not use ungraded abrasive. Make adjustments to processes or abrasive gradation to achieve specified surface profile. Recycled non-metallic abrasive shall meet all requirements of the specification each time that it is placed in the blast pot.

2.5.2 Metallic Abrasive

2.5.2.1 New and Remanufactured Steel Grit

Conform to the chemical and physical properties of SSPC AB 3 Class 1 (Steel) only. Class 2 (Iron) abrasive shall not be used.

To develop a suitable work mix from new steel abrasive, a minimum of 200 - 400 recycles is required, therefore, it is advantageous for a Contractor to use remanufactured steel grit or grit reclaimed from a previous project. Such grit shall be considered to conform if it can be traced to new grit conforming to SSPC AB 3 Class 1 and it meets all cleanliness requirements of SSPC AB 3 Class 1 when brought to the current jobsite. Submit one representative sample of this work mix to the laboratory for testing, along with samples of new material. Acceptance and use of this work mix shall not be used to justify any deviation from surface preparation requirements.

2.5.2.2 Recycled Steel Grit

Conform to the chemical and physical properties of SSPC AB 2

PART 3 EXECUTION

Perform all work, rework, and repair in accordance with approved procedures in the Coating Work Plan.

3.1 COATING AND ABRASIVE SAMPLE COLLECTION AND TESTING

Sample and test materials delivered to the jobsite. Notify Contracting Officer three days in advance of sampling. The QC Manager, and either the PCS or coating inspector, shall witness all sampling.

3.1.1 Coating Sample Collection

Provide a sample collection kit as required in paragraph COATING SAMPLE COLLECTION AND SHIPPING KIT. From each lot, obtain a one quart sample of each batch of each base material, and proportional samples of each activator based on mix ratio, by random selection from sealed containers in accordance with ASTM D3925. Prior to sampling, mix contents of each sealed container to ensure uniformity. As an alternative to collecting small samples from kits, entire kits may be randomly selected and shipped to laboratory, observing all requirements for witnessing and traceability.

For purposes of quality conformance inspection, a lot is defined as that quantity of materials from a single, uniform batch produced and offered for delivery at one time. A batch is defined as that quantity of material processed by the manufacturer at one time and identified by number on the label. Identify samples by designated name, specification number, batch number, project contract number, sample date, intended use, and quantity involved. The QC Manager will take possession of the packaged samples, contact the shipping company to arrange for pickup, and relinquish the samples only to the shipping representative for shipment to the approved laboratory for testing as required by the paragraph entitled "Coating Sample Test Reports."

3.1.2 Abrasive Sample Collection

Provide suitably sized containers for each sample to be taken. Provide a sample collection kit as required in paragraph ABRASIVE SAMPLE COLLECTION AND SHIPPING KIT. For purposes of quality conformance inspection, a lot shall consist of all abrasive materials of the same type from a single, uniform batch produced and offered for delivery at one time. Obtain samples of each abrasive lot using the sampling techniques and schedule of MIL-A-22262. The addition of any substance to a batch shall constitute a new lot. Identify samples by designated name, specification number, lot number, project contract number, sample date, intended use, and quantity involved. The QC Manager will take possession of the packaged samples, contact the shipping company to arrange for pickup, and relinquish the samples only to the shipping representative for shipment to the approved laboratory for testing as required by the paragraph ABRASIVE SAMPLE TEST REPORTS.

3.1.3 Coating Sample Test Reports

Submit test results for each lot of coating material delivered to the jobsite. Test samples of primer, intermediate, and topcoat materials for compliance with requirements of Table I. Reject entire lot represented by samples that fail one or more tests, select new lots, and test samples.

3.1.4 Abrasive Sample Test Reports

Submit test results for each lot of abrasive delivered to the jobsite. Test samples of metallic abrasive to the requirements of paragraph REQUIREMENTS of SSPC AB 3, except paragraph 4.1.5 DURABILITY. Test samples of non-metallic abrasive as required in paragraph QUALITY CONFORMANCE INSPECTION of MIL-A-22262. Reject entire lot represented by samples that fail one or more tests, select new lots, and test samples.

3.2 LIGHTING

Provide lighting for all work areas as prescribed in SSPC Guide 12.

3.3 ENVIRONMENTAL CONDITIONS

3.3.1 Control System Requirements

Provide and utilize dehumidification and ventilation equipment to control humidity, temperature, and vapor levels in tank from beginning of abrasive blasting through coating application and for four days after the last coating is applied. System shall maintain vapor concentrations at or below 10 percent of Lower Explosive Limit (LEL). System may incorporate any combination of solid desiccant and direct expansion refrigeration

equipment. No liquid, granular, calcium chloride, or lithium chloride drying systems will be accepted. Use only electric, indirect fired combustion, indirect friction, or steam coil auxiliary heaters. System shall be compatible with removal of dust and solvent vapors, and shall have fail-safe measures to ensure reliability during operations.

3.3.2 Automated Monitoring Requirements

Provide continuous monitoring of DH equipment, and temperature, relative humidity, and dew point data at pertinent points on the structure, during surface preparation, coating application, and initial cure. Locate sensors to provide pertinent data for the surface preparation and coat application being performed. Make data available to the Contracting Officer through Internet access. Provide monitoring equipment to perform as follows:

a. Data is collected in the field unit in one minute increments, and available for download (on-site) in a standard format. Contractor shall collect this data and make available to the Contracting Officer;

b. Monitoring equipment shall have backup power such that data collection and transmission to web server will be uninterrupted during the entire period of the dehumidification requirement;

c. Monitoring equipment shall have capability to measure surface temperatures at a minimum of four locations anywhere on a 150 foot diameter by 50 foot high tank;

d. Monitoring equipment shall have capability to measure interior and exterior dry bulb temperature (DB), relative humidity (RH), and dewpoint temperature (DP);

e. Data shall be available continuously through secure Internet connection, using widely available web browsers;

f. Internet accessible data shall be collected and stored in maximum 15 minute increments, and lag time between data collection and online availability shall be no greater than 70 minutes;

g. Internet accessible data shall be available for viewing online in tabular format, and graphical format using selected data;

h. Internet accessible data shall be available for download in user-defined segments, or entire project to date, in a standard format usable by Microsoft Excel and other spreadsheet programs.

i. Internet-based controls shall provide alerts to pre-designated parties through e-mail messaging;

j. Internet-based controls shall monitor data uploads from field unit and issue alert if data not initiated within 60 minutes of last upload;

k. Internet-based controls shall monitor operation of DH equipment and issues alert when power remains off for more than 15 seconds, or if pre-determined temperature, RH, or DP conditions are exceeded;

The requirements listed here were developed around the Munters Exactaire Monitoring System, as this was the only monitoring system having Internet connectivity known to be commercially available. There is no requirement for connectivity of the monitoring system to control the DH equipment,

therefore, any combination of equipment having the required functionality will be accepted.

3.3.3 Humidity Control for Surface Preparation and Primer Application

Provide and utilize dehumidification equipment to maintain relative humidity at appropriate level to prevent prepared steel surfaces from corroding at all times during abrasive blasting through primer application. Failure of humidity control system, or failure to maintain proper conditions, during surface preparation stage may allow surface rusting, which will be rejected and require rework. All surfaces to be coated must meet all requirements at time of primer application. Failure of humidity control system during primer application stage will be cause for removal and replacement of all materials applied and cured while conditions were not as prescribed above.

3.3.4 Humidity Control for Application of Intermediate and Topcoats and Initial Curing

Provide and utilize dehumidification equipment to maintain relative humidity at the coldest steel surface in tank below 55 percent at all times during coating application, and during the first four days of initial curing after application of topcoat. This measurement is not the same as measuring the relative humidity of ambient air in the tank, and will require either electronic equipment to monitor relative humidity at the steel surface, or complex calculations to convert relative humidity of air in tank to relative humidity at steel surface. An approved alternative method of monitoring dehumidification that requires less sophisticated equipment or calculations is to maintain a minimum dew point depression of 18 degrees F below coldest steel surface temperature. This is in lieu of specific relative humidity and dew point requirements in this Section. Failure to maintain specified humidity control during this phase will be cause for extension of humidity controlled cure time to ensure four consecutive days at specified relative humidity at steel surfaces. Formation of condensation in coating application stage prior to the indicated dry-hard time will be cause for removal and replacement of all materials contacted by condensation.

3.4 SURFACES TO BE COATED

Prepare and coat interior tank surfaces of factory fabricated fuel storage tanks.

3.5 SURFACE PREPARATION

3.5.1 Abrasive Blasting Equipment

Use abrasive blasting equipment of conventional air, force-feed, or pressure type. Maintain a minimum pressure of 95 psig at nozzle. Confirm that air supply for abrasive blasting is free of oil and moisture when tested in accordance with ASTM D4285. Test air quality at each startup, but in no case less often than every five operating hours.

3.5.2 Operational Evaluation of Abrasive

Test abrasive for salt contamination and oil contamination as required by the appropriate abrasive specification daily at startup and every five operating hours thereafter.

3.5.3 Surface Standard

Inspect surfaces to be coated, and select plate with similar properties and surface characteristics for use as a surface standard. Blast clean one or more 1 foot square steel panels as specified in paragraph SURFACE PREPARATION. Record blast nozzle type and size, air pressure at nozzle and compressor, distance of nozzle from panel, and angle of blast to establish procedures for blast cleaning. Measure surface profile in accordance with ASTM D7127. When the surface standard complies with all specified requirements, seal with a clearcoat protectant. Use the surface standard for comparison to abrasive blasted surfaces throughout the course of work.

3.5.4 Pre-Preparation Testing for Surface Contamination

Perform testing, abrasive blasting, and testing in the prescribed order.

3.5.4.1 Pre-Preparation Testing for Oil and Grease Contamination

Inspect all surfaces for oil and/or grease contamination using two or more of the following inspection techniques: 1) Visual inspection, 2) WATER BREAK TEST, 3) BLACK LIGHT TEST, and 4) CLOTH RUB TEST. Reject oil and/or grease contaminated surfaces, clean in accordance with SSPC SP 1, and recheck for contamination until surfaces are free of oil and grease.

WATER BREAK TEST - Spray atomized mist of distilled water onto surface, and observe for water beading. If water "wets" surface rather than beading up, surface can be considered free of oil or grease contamination. Beading of water (water forms droplets) is evidence of oil or grease contamination.

BLACK LIGHT TEST - Inspect surfaces for oil and grease contamination using the light specified in the paragraph BLACK LIGHT. Use light no more than 15 inches from surface unless testing indicates that the specific oil or grease found in tank fluoresce at a greater distance. Use light in tank that is completely sealed from light infiltration, under a hood, or at night. Any fluorescing on steel surfaces is indication of petroleum oil/grease contamination. Use either WATER BREAK TEST or CLOTH RUB TEST to confirm both contaminated and non-contaminated areas detected by BLACK LIGHT TEST. The BLACK LIGHT TEST may not be used during inspection of prepared surfaces for oil and grease contamination unless proven to fluoresce the oil and/or grease found in the specific tank and documented during testing prior to abrasive blasting. Generally, only petroleum oil/grease will fluoresce, however, some may not fluoresce sufficiently to be recognized and other methods, such as the WATER BREAK TEST or CLOTH RUB TEST, must be used to confirm findings of the BLACK LIGHT TEST.

CLOTH RUB TEST - Rub a clean, white, lint free, cotton cloth onto surface and observe for discoloration. To confirm oil or grease contamination in lightly stained areas, a non-staining solvent may be used to aid in oil or grease extraction. Any visible discoloration is evidence of oil or grease contamination.

3.5.4.2 Pre-Preparation Testing for Soluble Salts Contamination

Test surfaces for soluble salts, and wash as required, prior to abrasive blasting. Soluble salt testing is also required in paragraph PRE-APPLICATION TESTING FOR SOLUBLE SALTS CONTAMINATION as a final acceptance test of prepared surfaces after abrasive blasting, and successful completion of this phase does not negate that requirement. This phase is recommended since pre-preparation testing and washing are

generally more advantageous than attempting to remove soluble salt contamination after abrasive blasting. Effective removal of soluble salts will require removal of any barrier to the steel surface, including rust. This procedure may necessitate combinations of wet abrasive blasting, high pressure water rinsing, and cleaning using a solution of water washing and soluble salts remover. The soluble salts remover shall be acidic, biodegradable, nontoxic, noncorrosive, and after application, will not interfere with primer adhesion. Delays between testing and preparation, or testing and coating application, may allow for the formation of new contamination. Use potable water, or potable water modified with soluble salt remover, for all washing or wet abrasive blasting. Test methods and equipment used in this phase are selected at the Contractor's discretion.

3.5.5 Abrasive Blasting

Abrasive blast steel surfaces to near-white metal in accordance with SSPC SP 10/NACE No. 2. Prepared surfaces shall conform to SSPC VIS 1 and shall match the prepared test-panels. Provide a 2 to 3 mil surface profile. Reject profile greater than 3 mils, discontinue abrasive blasting, and modify processes and materials to provide the specified profile. Measure surface profile in accordance with ASTM D7127, using Rmax as the measure of profile height. Record all measurements required in this standard. Measure profile at rate of three tests for the first 1000 square feet plus one test area for each additional 1000 square feet or part thereof. When surfaces are reblasted for any reason, retest profile as specified. Following abrasive blasting, remove dust and debris by vacuum cleaning. Do not attempt to wipe surface clean.

3.5.6 Disposal of Used Abrasive

Dispose of used abrasive in accordance with Federal, State and Local mandated regulations.

3.5.7 Pre-Application Testing For Surface Contamination

3.5.7.1 Pre-Application Testing for Oil and Grease Contamination

Ensure tank surfaces are free of contamination as described in paragraph PRE-PREPARATION TESTING FOR OIL AND GREASE CONTAMINATION.

3.5.7.2 Pre-Application Testing for Soluble Salts Contamination

Test surfaces for chloride contamination using the Test Kit described in paragraph TEST KIT FOR MEASURING CHLORIDE, SULFATE AND NITRATE IONS ON STEEL AND COATED SURFACES. Test all surfaces at rate of three tests for the first 1000 square feet plus one test for each additional 2000 square feet or part thereof. One or more readings greater than nondetectable for chlorides, sulfates, or nitrates is evidence of soluble salt contamination. Reject contaminated surfaces, wash as discussed in paragraph PRE-PREPARATION TESTING FOR SOLUBLE SALTS CONTAMINATION, allow to dry, and re-test until all required tests show allowable results. Reblast tested areas using vacuum equipped blast equipment. Label all test tubes and retain for test verification.

3.5.7.3 Pre-Application Testing for Surface Cleanliness

Apply coatings to dust free surfaces. To test surfaces, apply strip of clear adhesive tape to surface and rub onto surface with finger. When removed, the tape should show little or no dust, blast abrasive, or other

contaminant. Reject contaminated surfaces, clean by vacuum cleaning, and retest. Test surfaces at rate of three tests for the first 1000 square feet plus one test for each additional 1000 square feet or part thereof. Provide two additional tests for each failed test or questionable test. Attach test tapes to Daily Inspection Reports.

3.6 MIXING AND APPLICATION OF SEALANT AND COATING SYSTEM

3.6.1 Preparation of Sealant and Coating Materials for Application

Each of the different products, primer, intermediate, and topcoat, is a two-component material supplied in separate containers.

3.6.1.1 Mixing

Mix in accordance with manufacturer's instructions, which may differ for each product. Do not mix partial kits, or alter mix ratios. Mix materials in same temperature and humidity conditions specified in paragraph DELIVERY AND STORAGE. Allow mixed material to stand for the required induction time based on its temperature.

3.6.1.2 Pot Life

Apply mixed products within stated pot life for each product. Stop applying when material becomes difficult to apply in a smooth, uniform wet film. Do not add solvent to extend pot life. Add all required solvent at time of mixing. Pot life is based on standard conditions at 70 degrees F and 50 percent relative humidity. For every 18 degrees F rise in temperature, pot life is reduced by approximately half, and for every 18 degrees F drop, it is approximately doubled. Usable pot life depends on the temperature of the material at the time of mixing and the sustained temperature at the time of application. Other factors such as the shape of the container and volume of mixed material may also affect pot life. In hot climates, precooling or exterior icing of components for at least 24 hours to a minimum of 50 degrees F will extend pot life. Following are approximate pot life times:

Epoxy Primer and Intermediate Coat Materials	4 hours

3.6.1.3 Application Conditions and Recoat Windows

The application condition requirements for the coating system are very time and temperature sensitive, and are intended to avoid the delamination problems frequently found on industrial structures. Plan coating application to ensure that specified temperature, humidity, and condensation conditions are met. If conditions do not allow for orderly application of sealant, primer, stripe coat, intermediate coat and topcoat, use appropriate means of controlling air and surface temperatures, as required. Partial or total enclosures, insulation, heating or cooling, or other appropriate measures may be required to control conditions to allow for orderly application of all required coats.

Maintain air and steel surface temperature between 60 and 100 degrees F during application and the first four hours of cure for epoxy coats and the first eight hours of cure for polyurethane coats. Maintain steel surface temperature more than 5 degrees F above the dew-point of the ambient air for the same period.

Use Table entitled "RECOAT WINDOWS" to determine appropriate recoat windows

for each coat after the initial coat. Apply each coat during appropriate RECOAT WINDOW of preceding coat. If a RECOAT WINDOW is missed, the minimum and maximum primer and intermediate coat thickness may be adjusted to accommodate a FILL COAT, however, requirements for total epoxy coating thickness and total coating thickness will not be modified. Missing more than one RECOAT WINDOW may require complete removal of coating if maximum total coating thickness requirements cannot be achieved.

If coating is not applied during RECOAT WINDOW, or if surface temperature exceeds 120 degrees F between applications, provide GLOSS REMOVAL, apply next coat within 24 hours. If next planned coat is topcoat, apply FILL COAT if required to fill sanding marks. Sanding marks from GLOSS REMOVAL of intermediate coat reflecting through topcoat will be considered as non-compliant. Apply FILL COAT within 24 hours of GLOSS REMOVAL, then apply topcoat within RECOAT WINDOW of FILL COAT.

RECOAT WINDOWS						
Temperature degrees F	60-70	71-80	81-90	91-100	101-110	111-120
RECOAT WINDOW (Hrs.)	24-72	18-60	16-48	12-36	8-18	8-18

The temperature ranges shown in the table above are for determining recoat windows. Choose recoat window based on the highest surface temperature that was sustained for one or more hours between coats. This applies to the entire time between coats. Measure and record air and surface temperatures on hourly basis to determine appropriate recoat windows. If surface temperature goes above 100 degrees F, measure and record temperatures every half hour.

FILL COAT - Where indicated, apply coat of intermediate coat epoxy, at 2 to 3 mils DFT, then apply next specified full coat within recoat window of FILL COAT. A FILL COAT may be used to adjust coating thickness to comply with requirements or to fill sanding marks in intermediate coat.

GLOSS REMOVAL - Where required, hand sand in a linear fashion to remove gloss using 120-200 grit wet/dry sandpaper, followed by solvent wiping with a clean rag soaked with denatured alcohol to remove all dust. GLOSS REMOVAL of primer coat is to scarify surface and shall consist of removal of approximately 1 mil of coating. If steel is exposed during GLOSS REMOVAL, repair in accordance with paragraph PROCEDURE FOR HOLIDAY AND SPOT REPAIRS OF NEWLY APPLIED COATING. GLOSS REMOVAL of intermediate coat may include removal of up to 3 mils of coating to avoid excess thickness, prior to application of FILL COAT.

3.6.2 Amine Blush Testing of Epoxy Coat Prior to Overcoating

Test epoxy surfaces prior to application of roof joint sealant, epoxy coat, or polyurethane topcoat for amine blush contamination using the Test Kit described in paragraph TEST KIT FOR IDENTIFYING AMINE BLUSH ON EPOXY SURFACES. Test all surfaces at rate of three tests for the first 1000 square feet plus one test for each additional 2000 square feet or part thereof. If one or more tests show positive results for amine blush contamination, either treat all surfaces using the approved amine blush removal procedure or increase testing to ensure that all contamination is located, and then treat identified contamination using the approved procedure.

3.6.3 Application of Coating System

Apply coatings in accordance with SSPC PA 1 and as specified herein. Apply coatings to surfaces that meet all stated surface preparation requirements.

After application of primer coat and prior to application of each subsequent coat, perform testing prescribed in paragraph PRE-APPLICATION TESTING FOR SURFACE CONTAMINATION, as necessary, to ensure minimal intercoat contamination. This testing may be reduced to one half of the prescribed rate for bare steel if the testing indicates no contamination when sampling is evenly distributed over surfaces being tested. If contamination is found between coats, revert to the specified testing rate. Generally, oil and grease contamination and soluble salts contamination are not encountered if subsequent coats are applied within specified recoat windows and the quality of air entering tank is controlled. Concern for intercoat contamination should be continually prevalent, and spot testing should be accomplished to verify satisfactory conditions. Where visual examination or spot testing indicates contamination, perform sufficient testing to verify non-contamination, or to define extent of contamination for appropriate treatment.

Apply each coat in a consistent wet film, at 90 degrees to previous coat. Ensure that primer and intermediate coat "cold joints" are no less than six inches from welds. Apply stripe coat by brush. For convenience, stripe coat material may be delivered by spray if followed immediately with brush-out and approved procedures include appropriate controls on thickness. Apply all other coats by spray application. The cleanliness, temperature, recoat windows, and airborne paint containment requirements may necessitate the use of portable shelters or other appropriate controls.

Apply coatings at the following specified thickness:

Coat	Minimum DFT (Mils)	Maximum DFT (Mils)
Primer	3	5
Intermediate	3	5
Top	3	5
Total system	9	15

Measure coating thickness in accordance with SSPC PA 2 to confirm that coating application is within the specified range and within the tolerances of that standard. For non-compliant areas, increase number of test areas to identify all non-compliant application as required by SSPC PA 2. Add coating as required to correct underuns, and remove coating with excess thickness to bare steel and reapply as specified in paragraph PROCEDURE FOR HOLIDAY AND SPOT REPAIRS OF NEWLY APPLIED COATING.

3.6.3.1 Application of Stripe Coat

Apply stripe coat of epoxy primer material prior to application of general primer coat on CEILING and SHELL. Apply stripe coat of epoxy intermediate coat material after application of general primer coat on FLOOR. Where stripe coat is applied to areas of joint sealant, allow appropriate curing

time for joint sealant. Apply stripe coat by brush, working the material into corners, crevices, pitted areas, and welds, and onto outside corners and angles. Where roof-to-rafter joints exceed 1 inch gap and roof joint sealant was not applied, use appropriate application tools to provide "best effort" coating of all exposed steel surfaces in the gap. Mini-rollers or other tools may be required.

3.6.3.2 Application of Primer

Apply primer coat within RECOAT WINDOW of stripe coat.

3.6.3.3 Application of Intermediate Coat

Apply intermediate coat within RECOAT WINDOW of primer coat.

3.6.3.4 Application of Topcoat

Make all required repairs to primer and intermediate coats as specified in paragraph entitled "Procedure for Holiday and Spot Repairs of Newly Applied Coating" prior to applying topcoat. Apply topcoat within RECOAT WINDOW of intermediate coat. The polyurethane topcoat may require multiple passes to achieve desired required thickness. Consult manufacturer for application procedures for anticipated temperature and humidity conditions. Touch-up blemishes and defects within recoat window of polyurethane topcoat.

3.6.4 Holiday Testing

No sooner than 48 hours after application of the topcoat, perform holiday testing in accordance with the low voltage wet sponge method of NACE SP0188. Repair holidays per paragraph entitled "Procedure for Holiday and Spot Repairs of Newly Applied Coating." .

3.6.5 Procedure for Holiday and Spot Repairs of Newly Applied Coating

Repair coating film defects at the earliest practicable time, preferably before application of the succeeding coat. Observe all requirements for soluble salts contamination, cleanliness between coats, and application conditions. Prepare defective area in accordance with SSPC SP 10/NACE No. 2, and feather coating as required to leave 4 inches of each succeeding coat feathered and abraded. Do not abrade the polyurethane topcoat. Protect adjacent areas from damage and overspray. Remove dust and solvent wipe the prepared area plus an additional 4 inches beyond the prepared area with clean denatured alcohol. Apply each coat within RECOAT WINDOW of preceeding coat. Within four hours of preparation, apply primer to prepared steel and feather onto prepared primer. Apply intermediate coat to primed area and feather to prepared intermediate area. Apply topcoat to intermediate coat and feather to prepared topcoat. Apply each repair coat to approximate thickness of surrounding coating system. If 5 percent or more of the total surface area, or more than one spot per 1000 square feet, of the tank interior area requires repair to any coat or coats, including feathered areas, the entire CEILING coating system shall be removed and reapplied. Repairs on the SHELL are not limited.

3.6.6 Tank Occupancy After Coating Application

Use clean canvas, or other approved, shoe covers when walking on coated surfaces, regardless of curing time allowed. For heavily trafficked areas, provide cushioned mats for additional protection.

3.6.7 Extended Cure of Coating System Prior to Immersion Service

Allow a cure time of at least 14 days after the final coating material has been applied before introducing water or fuel into tank.

3.7 PROJECT IDENTIFICATION

At the completion of the tank work, stencil the following information on the exterior of the tank adjacent to the main manway opening in 3/4 to one inch Helvetica style letters of contrasting color using acrylic stencil paint:

Date Interior coated:
Project Number:
Contractor:
Address:
Coating System
Surface Prep: SSPC SP ____ Profile: _____
Primer: _____ Thickness: ____
Intermediate: _____ Thickness: ____
Topcoat: _____ Thickness: ____
Total Thickness: _____

3.8 FIELD QUALITY CONTROL

Project documentation, including inspection and testing records, shall be used to determine the Contractor's compliance with contract requirements and approved procedures. The Contractor's certifications of completion, for both invoices and for project completion, shall be based on documented evidence of compliance with all requirements and approved Coating Work Plan procedures. Track inspections and tests in the Test Plan & Log.

3.8.1 Coating Inspector

The coating inspector shall be considered a QC Specialist and shall report to the QC Manager, as specified in Section 01 45 00.00 20 NAVFAC QUALITY CONTROL. The Coating Inspector shall be present during all pre-preparation testing, surface preparation, coating application, initial cure of the coating system, during all coating repair work, and during completion activities as specified in Section 01 45 00.00 20 NAVFAC QUALITY CONTROL. The Coating Inspector shall provide complete documentation of conditions and occurrences on the job site, and be aware of conditions and occurrences that are potentially detrimental to the coating system. The requirements for inspection listed in this Section are in addition to the QC inspection and reporting requirements specified in Section 01 45 00.00 20 NAVFAC QUALITY CONTROL

3.8.2 Shop Inspection

3.8.2.1 Inspection and Documentation Requirements

Perform shop inspection in accordance with ASTM D3276 and the approved Coating Work Plan. Document Contractor's compliance with the approved Coating Work Plan.

Provide all tools and instruments required to perform the required testing, as well as any tools or instruments that the inspector considers necessary to perform the required inspections and tests. Document each inspection and test, including required hold points and other required inspections and

tests, as well as those inspections and tests deemed prudent from on-site evaluation to document a particular process or condition, as follows:

a. Location or area;

b. Purpose (required or special);

c. Method;

d. Criteria for evaluation;

e. Results;

f. Determination of compliance;

g. List of required rework;

h. Observations.

Collect and record Environmental Conditions as described in ASTM D3276 on a 24 hour basis, as follows:

a. During surface preparation, every two hours or when changes occur;

b. During coating application and the first four days of initial cure, every hour, or when changes occur;

c. Note location, time, and temperature of the highest and lowest surface temperatures each day;

d. Use a non-contact thermometer to locate temperature extremes, then verify with contact thermometers.

NOTE: Data collected on Environmental conditions in paragraph AUTOMATED MONITORING REQUIREMENTS may be used for overnight data, however, the data must be constantly verified as to location of sensors and validity of data with respect to the coating work being accomplished.

Document all equipment used in inspections and testing, including manufacturer, model number, serial number, last calibration date and future calibration date, and results of on-site calibration performed. Work documented using data from equipment found to be out of calibration shall be considered as non-compliant since last calibration or calibration check, as required.

3.8.2.2 Inspection Report Forms

Develop project-specific report forms as required to report measurement and test results and observations being complete and compliant with contract requirements. This includes all direct requirements of the contract documents and indirect requirements of referenced documents. Show acceptance criteria with each requirement and indication of compliance of each inspected item. Annotation of non-compliance shall be conspicuous so as to facilitate identification and transfer to the Rework Log. Report forms shall include requirements and acceptance and rejection criteria, and shall be legible and presented so that entered data can be quickly compared to the appropriate requirement.

3.8.2.3 Daily Inspection Reports

Submit one copy of daily inspection report completed each day when performing work under this Section, to the Contracting Officer. Note all non-compliance issues, and all issues that were reported for rework in accordance with QC procedures of Section 01 45 00.00 20 NAVFAC QUALITY CONTROL. Each report shall be signed by the coating inspector and the QC Manager. Submit report within 24 hours of date recorded on the report.

3.8.2.4 Inspection Logbook

A continuous record of all activity related to this Section shall be maintained in an Inspection Logbook on a daily basis. The logbook shall be hard or spiral bound with consecutively numbered pages, and shall be used to record all information provided in the Daily Inspection Reports, as well as other pertinent observations and information. The Coating Inspector's Logbook that is sold by NACE is satisfactory. Submit the original Inspection Logbook to the Contracting Officer upon completion of the project and prior to final payment.

3.8.3 Inspection Equipment

All equipment shall be in good condition, operational within its design range, and calibrated as required by the specified standard for use of each device.

3.8.3.1 Black Light

Use a black light having a 365 nanometer intensity of 4,000 microwatts per square centimeter minimum at 15 inches. The Spectroline BIB-150P from Spectronics Corporation satisfies this requirement.

3.9 FINAL CLEANUP

Following completion of the work, remove debris, equipment, and materials from the site. Remove temporary connections to Government or Contractor furnished water and electrical services. Restore existing facilities in and around the work areas to their original condition.

TABLE I

COATING QUALITY CONFORMANCE INSPECTION REQUIREMENTS

Table Ia. - Epoxy Primer Coat MIL-DTL-24441/29 Formula 150 Type IV (Green)

Test	Component A		Component B		Mixed	
	Min.	Max.	Min.	Max.	Min.	Max.
Pigment content, percent	45.0	50.0	35.0	40.0	---	---
Volatiles, percent	29.0	35.0	15.0	20.0	---	---
Non-volatiles vehicle, percent	17.5	23.5	43.0	48.0	---	---
Course particles, percent	---	.03	---	.03	---	---
Consistency, grams	300	410	470	600	260	410
Weight						
Kilograms / liter	1.33	1.39	1.33	1.39	1.33	1.39
Pounds / gallon	11.1	11.6	11.1	11.6	11.1	11.6
Set to touch, hours at 23 degrees C, 73 degrees F	---	---	---	---	---	3
Dry-hard time, hours at 23 degrees C, 73 degrees F	---	---	---	---	---	6
Fineness of grind, Hegman	3	---	2	---	---	---
Flashpoint						
Degrees C	35.5	---	37.8	---	---	---
Degrees F	96	---	100	---	---	---
Titanium Dioxide, percent of pigment	18	---	---	---	---	---
Pot life, hours at 23 degrees C, 73 degrees F	---	---	---	---	4	---
Sag resistance						

TABLE I

COATING QUALITY CONFORMANCE INSPECTION REQUIREMENTS

Table Ia. - Epoxy Primer Coat MIL-DTL-24441/29 Formula 150 Type IV (Green)

Test	Component A		Component B		Mixed	
	Min.	Max.	Min.	Max.	Min.	Max.
Micrometers	---	---	---	---	300	---
Mils	---	---	---	---	12	---
Color of dry film to approximate color of FED-STD-595 color 24272	---	---	---	---	---	Conform
Contrast ratio at 75 micrometers, 3 mils DFT	---	---	---	---	0.98	---
VOC						
Grams / liter	---	---	---	---	---	340
Pounds / gallon	---	---	---	---	---	2.8

GENERAL NOTES:
Test methods as specified in MIL-DTL-24441.
Where "Conform" is indicated, refer to specific requirements of MIL-DTL-24441/29.

TABLE I

COATING QUALITY CONFORMANCE INSPECTION REQUIREMENTS

Table Ib. - Epoxy Intermediate Coat MIL-DTL-24441/31 Formula 152 Type IV (White (Tinted))

Test	Component A		Component B		Mixed	
	Min.	Max.	Min.	Max.	Min.	Max.
Pigment content, percent	44.0	49.0	33.0	38.0	---	---
Volatiles, percent	29.0	35.0	16.0	21.0	---	---
Non-volatiles vehicle, percent	17.5	23.5	44.0	49.0	---	---
Course particles, percent	---	0.3	---	0.3	---	---
Consistency, grams	180	320	300	470	180	245
Weight						
Kilograms / liter	1.39	1.45	1.29	1.35	1.34	1.40
Pounds / gallon	11.6	12.1	10.8	11.3	11.1	11.7
Set to touch, hours at 23 degrees C, 73 degrees F	---	---	---	---	---	3
Dry-hard time, hours at 23 degrees C, 73 degrees F	---	---	---	---	---	8
Fineness of grind, Hegman	4	---	4	---	---	---
Flashpoint						
Degrees C	35.5	---	37.8	---	---	---
Degrees F	96	---	100	---	---	---
Titanium Dioxide, percent of pigment	91	---	---	---	---	---
Pot life, hours at 23 degrees C, 73 degrees F	---	---	---	---	4	---
Sag resistance						
Micrometers	---	---	---	---	300	---

TABLE I

COATING QUALITY CONFORMANCE INSPECTION REQUIREMENTS

Table Ib. - Epoxy Intermediate Coat MIL-DTL-24441/31 Formula 152 Type IV (White (Tinted))

Test	Component A		Component B		Mixed	
	Min.	Max.	Min.	Max.	Min.	Max.
Mils	---	---	---	---	12	---
Color of dry film to approximate color of FED-STD-595 color 27778	---	---	---	---	---	Conform
Contrast ratio at 75 micrometers, 3 mils DFT	---	---	---	---	0.98	---
Gloss, 60 degree specular	---	---	---	---	35	---
VOC						
Grams / liter	---	---	---	---	---	340
Pounds / gallon	---	---	---	---	---	2.8

GENERAL NOTES:
Test methods as specified in MIL-DTL-24441.
Where "Conform" is indicated, refer to specific requirements of MIL-DTL-24441/31.

TABLE I

COATING QUALITY CONFORMANCE INSPECTION REQUIREMENTS

Table Ic. - Epoxy Intermediate Coat MIL-DTL-24441/31 Formula 152 Type IV (White)

Test	Component A		Component B		Mixed	
	Min.	Max.	Min.	Max.	Min.	Max.
Pigment content, percent	44.0	49.0	33.0	38.0	---	---
Volatiles, percent	29.0	35.0	16.0	21.0	---	---
Non-volatiles vehicle, percent	17.5	23.5	44.0	49.0	---	---
Course particles, percent	---	0.3	---	0.3	---	---
Consistency, grams	180	320	300	470	180	245
Weight						
Kilograms / liter	1.39	1.45	1.29	1.35	1.34	1.40
Pounds / gallon	11.6	12.1	10.8	11.3	11.2	11.7
Set to touch, hours at 23 degrees C, 73 degrees F	---	---	---	---	---	3
Dry-hard time, hours at 23 degrees C, 73 degrees F	---	---	---	---	---	8
Fineness of grind, Hegman	4	---	4	---	---	---
Flashpoint						
Degrees C	35.5	---	37.8	---	---	---
Degrees F	96	---	100	---	---	---
Titanium Dioxide, percent of pigment	91	---	---	---	---	---
Pot life, hours at 23 degrees C, 73 degrees F	---	---	---	---	4	---
Sag resistance						
Micrometers	---	---	---	---	300	---

TABLE I

COATING QUALITY CONFORMANCE INSPECTION REQUIREMENTS

Table Ic. - Epoxy Intermediate Coat MIL-DTL-24441/31 Formula 152 Type IV (White)

Test	Component A		Component B		Mixed	
	Min.	Max.	Min.	Max.	Min.	Max.
Mils	---	---	---	---	12	---
Color of dry film to approximate color of FED-STD-595 color 27778	---	---	---	---	---	Conform
Contrast ratio at 75 micrometers, 3 mils DFT	---	---	---	---	0.98	---
Gloss, 60 degree specular	---	---	---	---	35	---
VOC						
Grams / liter	---	---	---	---	---	340
Pounds / gallon	---	---	---	---	---	2.8

GENERAL NOTES:
Test methods as specified in MIL-DTL-24441.
Where "Conform" is indicated, refer to specific requirements of MIL-DTL-24441/31.

-- End of Section --

SECTION 09 97 13.27

EXTERIOR COATING OF STEEL STRUCTURES
02/10

PART 1 GENERAL

1.1 REFERENCES

The publications listed below form a part of this specification to the extent referenced. The publications are referred to within the text by the basic designation only.

ASTM INTERNATIONAL (ASTM)

ASTM C920	(2011) Standard Specification for Elastomeric Joint Sealants
ASTM D1200	(2010) Viscosity by Ford Viscosity Cup
ASTM D1640	(2003; R 2009) Drying, Curing, or Film Formation of Organic Coatings at Room Temperature
ASTM D3276	(2007) Painting Inspectors (Metal Substrates)
ASTM D3925	(2002; R 2010) Sampling Liquid Paints and Related Pigmented Coatings
ASTM D4285	(1983; R 2012) Indicating Oil or Water in Compressed Air
ASTM D7127	(2013) Measurement of Surface Roughness of Abrasive Blast Cleaned Metal Surfaces using a Portable Stylus Instrument
ASTM E11	(2013) Wire Cloth and Sieves for Testing Purposes

INTERNATIONAL ORGANIZATION FOR STANDARDIZATION (ISO)

ISO 9001	(2008; Corr 1 2009) Quality Management Systems- Requirements

THE SOCIETY FOR PROTECTIVE COATINGS (SSPC)

SSPC 7/NACE No.4	(2007; E 2004) Brush-Off Blast Cleaning
SSPC AB 2	(1996; E 2004) Cleanliness of Recycled Ferrous Metallic Abrasive
SSPC AB 3	(2003; E 2004) Ferrous Metallic Abrasive
SSPC Guide 12	(1998; E 2004) Guide for Illumination of Industrial Painting Projects

SSPC Guide 6	(2004) Guide for Containing Surface Preparation Debris Generated During Paint Removal Operations
SSPC PA 1	(2000; E 2004) Shop, Field, and Maintenance Painting of Steel
SSPC PA 2	(2012) Measurement of Dry Coating Thickness With Magnetic Gages
SSPC QP 1	(1998; E 2004) Standard Procedure for Evaluating Painting Contractors (Field Application to Complex Industrial Structures)
SSPC QP 5	(1999; E 2004) Standard Procedure for Evaluating the Qualifications of Coating and Lining Inspection Companies
SSPC QS 1	(2004) Standard Procedure for Evaluating a Contractor's Advanced Quality Management System
SSPC SP 1	(1982; E 2004) Solvent Cleaning
SSPC SP 10/NACE No. 2	(2007) Near-White Blast Cleaning
SSPC SP COM	(2004) Surface Preparation Commentary for Steel and Concrete Substrates
SSPC VIS 1	(2002; E 2004) Guide and Reference Photographs for Steel Surfaces Prepared by Dry Abrasive Blast Cleaning

U.S. DEPARTMENT OF DEFENSE (DOD)

MIL-A-22262	(1993; Rev B; Am 2 1996) Abrasive Blasting Media Ship Hull Blast Cleaning
MIL-DTL-24441	(2009; Rev D) Paint, Epoxy-Polyamide, General Specification for
MIL-DTL-24441/19	(2009; Rev C) Paint, Epoxy-Polyamide, Zinc Primer, Formula 159, Type III
MIL-DTL-24441/31	(2009; Rev B) Paint, Epoxy-Polyamide, White, Formula 152, Type IV
MIL-PRF-85285	(2012; Rev E) Coating: Polyurethane Aircraft and Support Equipment
MIL-STD-161	(2005; Rev G; Notice 1 2010) Identification Methods for Bulk Petroleum Products Systems Including Hydrocarbon Missile Fuels

U.S. GENERAL SERVICES ADMINISTRATION (GSA)

FED-STD-595	(Rev C; Notice 1) Colors Used in

Government Procurement

U.S. NATIONAL ARCHIVES AND RECORDS ADMINISTRATION (NARA)

29 CFR 1910.1000	Air Contaminants
29 CFR 1910.134	Respiratory Protection
29 CFR 1926.59	Hazard Communication

1.2 DEFINITIONS

Definitions are provided throughout this Section, generally in the paragraph where used, and denoted by capital letters.

1.3 SUBMITTALS

Government approval is required for submittals with a "G" designation; submittals not having a "G" designation are for Contractor Quality Control approval. The following shall be submitted in accordance with Section 01 33 00 SUBMITTAL PROCEDURES:

SD-05, Design Data

Containment System

SD-06 Test Reports

Joint Sealant Qualification Test Reports

Coatings Qualification Test Reports

Metallic Abrasive Qualification Test Reports

Coating Sample Test Reports

Abrasive Sample Test Reports

Inspection Report Forms

Daily Inspection Reports

Recycled Metallic Abrasive Field Test Reports (Daily and Weekly)

SD-07 Certificates

Contract Errors, Omissions, and Other Discrepancies

Corrective Action Procedures

Coating Work Plan

Qualifications of Certified Industrial Hygienist (CIH)

Qualifications Of Individuals Performing Abrasive Blasting

Qualifications of Certified Protective Coatings Specialist (PCS)

Qualifications of Coating Inspection Company

Qualifications of QC Specialist Coating Inspector

Qualifications of Testing Laboratory for Coatings

Qualifications of Testing Laboratory for Abrasive

Qualifications of Coating Contractors

Joint Sealant Materials; G

Coating Materials; G

Coating System Component Compatibility; G

Non-metallic Abrasive

Metallic Abrasive

SD-08 Manufacturer's Instructions

Joint Sealant Instructions

Coating System Instructions

SD-11 Closeout Submittals

Disposal of Used Abrasive

Inspection Logbook; G

1.4 QUALITY ASSURANCE

1.4.1 Contract Errors, Omissions, and Other Discrepancies

Submit all errors, omissions, and other discrepancies in contract documents the Contracting Officer within 30 days of contract award for all work covered in this Section, other than the work that will not be uncovered until a later date. All such discrepancies shall be addressed and resolved, and the Coating Work Plan modified, prior to beginning the Initial and Follow-Up phases of work. Discrepancies that become apparent only after work is uncovered shall be identified at the earliest discoverable time and submitted for resolution. Schedule time (Float) should be built into the project schedule at those points where old work is to be uncovered or where access is not available during the first 30 days after award, to allow for resolution of contract discrepancies.

1.4.2 Corrective Action (CA)

CA shall be included in the Quality Control Plan.

1.4.2.1 Corrective Action Procedures

Develop procedures for determining the root cause of each non-compliance, developing a plan to eliminate the root cause so that the non-compliance does not recur, and following up to ensure that the root cause was eliminated. Develop Corrective Action Request (CAR) forms for initiating CA, and for tracking and documenting each step.

1.4.2.2 Implement Corrective Action

The Contractor shall take action to identify and eliminate the root cause of each non-compliance so as to prevent recurrence. These procedures shall apply to non-compliance in the work, and to non-compliance in the QC System. Corrective actions shall be appropriate to the effects of the non-compliance encountered. Each CAR shall be serialized, tracked in a Log to completion and acceptance by the Contracting Officer, and retained in project records. The Corrective Action Log, showing status of each CAR, shall be submitted to the Contracting Officer monthly. A CAR may be initiated by either the Contractor or the Contracting Officer. The Contracting Officer must approve each CAR at the root cause identification stage, the plan for elimination stage, and the close out stage after verification that the root cause has been eliminated.

1.4.3 Coating Work Plan

This work plan shall be considered as part of the Quality Control Plan.

Provide procedures for reviewing contract documents immediately after award to identify errors, omissions, and discrepancies so that any such issues can be resolved prior to project planning and development of detailed procedures.

Provide procedures for verification of key processes during Initial Phase to ensure that contract requirements can be met. Key processes shall include surface preparation, coating application and curing, inspection, and documentation, and any other process that might adversely impact orderly progression of work.

Provide procedures for all phases of coating operations, including planned work, rework, repair, inspection, and documentation. Address mobilization and setup, surface preparation, coating application, coating initial cure, tracking and correction of noncompliant work, and demobilization. Coordinate work processes with health and safety plans and confined space entry plans. For each process, provide procedures that include appropriate work instructions, material and equipment requirements, personnel qualifications, controls, and process verification procedures. Provide procedures for inspecting work to verify and document compliance with contract requirements, including inspection forms and checklists, and acceptance and rejection criteria.

Provide procedures for determining the existing surface profile under paint, and procedures for ensuring that the profile is not increased beyond the maximum profile specified herein.

Provide procedures for correcting noncompliant work. Detailed procedures are required in advance to avoid delays in meeting overcoat windows as well as to avoid delays in production. Provide procedures for repairing defects in the coating film, such as runs, drips, sags, holidays, overspray, as well as how to handle correct coating thickness noncompliance, any other areas of repair or rework that might be adversely affected by delays in preparing and approving new procedures.

If a procedure is based on a proposed or approved request for deviation, the deviation shall be referenced. Changes to procedures shall be noted by submittal number and date approved, clearly delineating old requirements and new requirements, so that the records provide a continuous log of requirements and procedures.

1.4.4 Design Data

1.4.4.1 Containment System

Submit complete design drawings and calculations for the scaffolding and containment system, including an analysis of the loads which will be added to the structure by the containment system and waste materials. A registered engineer shall approve calculations and scaffold system design.

1.4.5 Test Reports

1.4.5.1 Joint Sealant Qualification Test Reports

Submit test results from independent laboratory of representative samples of joint sealant material. Samples must have been tested within the last three years. Submit results as required in paragraph QUALITY ASSURANCE PROVISIONS of ASTM C920. Note that testing in accordance with QUALITY ASSURANCE PROVISIONS is a pre-qualification requirement.

1.4.5.2 Coatings Qualification Test Reports

Submit test results from independent laboratory of representative samples of each coating material. U.S. Department of Defense laboratories are considered to be independent laboratories for purposes of compliance with "QUALIFICATION INSPECTION" requirements herein. Samples must have been tested within the last three years. Submit results for epoxy materials as required in paragraph QUALIFICATION INSPECTION of MIL-DTL-24441, and as revised by paragraph COATING SYSTEM herein. Submit results for polyurethane materials as required in paragraph QUALIFICATION INSPECTION of MIL-PRF-85285, and as revised by paragraph COATING SYSTEM herein. Note that requirement for QUALIFICATION INSPECTION is a pre-qualification requirement, and involves the same testing required for listing in the Qualified Products List of the respective material. See appropriate Military Specification for specific test requirements.

1.4.5.3 Metallic Abrasive Qualification Test Reports

Submit results for abrasive as required in paragraph 4 REQUIREMENTS of SSPC AB 3. Submit test results from independent laboratory of representative samples of each abrasive to be used on the jobsite. Samples must have been tested within the last three years. Note that this testing is for the purpose of prequalifying the abrasive.

1.4.5.4 Recycled Metallic Abrasive Field Test Reports (Daily and Weekly)

Submit test results from independent laboratory of daily and weekly Quality Control testing required by SSPC AB 2, as modified in paragraph ABRASIVE.

1.4.6 Qualifications

1.4.6.1 Qualifications of Certified Industrial Hygienist (CIH)

Submit name, address, telephone number, FAX number, and e-mail address of the independent third party CIH. Submit documentation that hygienist is certified by the American Board of Industrial Hygiene in comprehensive practice, including certification number and date of certification/recertification. Provide evidence of experience with hazards involved in industrial coating application work.

1.4.6.2 Qualifications of Certified Protective Coatings Specialist (PCS)

Submit name, address, telephone number, FAX number, and e-mail address of the independent third party PCS. Submit documentation that specialist is certified by SSPC: The Society for Protective Coatings (SSPC) as a PCS, including certification number and date of certification/recertification. If the PCS is employed by the same coating inspection company to which the coating inspector is employed, this does not violate the independent third-party requirements. The PCS shall remain certified during the entire project, and the Contracting Officer shall be notified of any change in certification status within 10 days of the change. The PCS shall not be the designated coating inspector.

1.4.6.3 Qualifications of Coating Inspection Company

Submit documentation that the coating inspection company that will be performing all coating inspection functions is certified by SSPC to the requirements of SSPC QP 5 prior to contract award, and shall remain certified while accomplishing any coating inspection functions. The coating inspection company must remain so certified for the duration of the project. If a coating inspection company's certification expires, the firm will not be allowed to perform any inspection functions, and all surface preparation and coating application work must stop, until the certification is reissued. Requests for extension of time for any delay to the completion of the project due to an inactive certification will not be considered and liquidated damages will apply. Notify the Contracting Officer of any change in coating inspection company certification status.

1.4.6.4 Qualifications of QC Specialist Coating Inspector

Submit documentation that each coating inspector is employed, and qualified to SSPC QP 5, Level III, by the selected coating inspection company. Each inspector shall remain employed by the coating inspection company while performing any coating inspection functions.

1.4.6.5 Qualifications Of Individuals Performing Abrasive Blasting

Submit name, address, and telephone number of each person that will be performing abrasive blasting. Submit documentation that each blaster is qualified by SSPC to the SSPC C-7 Dry Abrasive Blaster Qualification Program. Each blaster shall remain qualified during the entire period of abrasive blasting, and the Contracting Officer shall be notified of any change in qualification status.

1.4.6.6 Qualifications of Testing Laboratory for Coatings

Submit name, address, telephone number, FAX number, and e-mail address of the independent third party laboratory selected to perform testing of coating samples for compliance with specification requirements. Submit documentation that laboratory is regularly engaged in testing of paint samples for conformance with specifications, and that persons performing analyses are qualified.

1.4.6.7 Qualifications of Testing Laboratory for Abrasive

Submit name, address, telephone number, FAX number, and e-mail address of the independent third party laboratory selected to perform testing of abrasive for compliance with specification requirements. Submit

documentation that laboratory has experience in testing samples of abrasive for conformance with specifications, and that persons performing analyses are qualified.

1.4.6.8 Qualifications of Coating Contractors

All Contractors and Subcontractors that perform surface preparation or coating application shall be certified to either ISO 9001 or SSPC QP 1 and SSPC QS 1 prior to contract award, and shall remain certified while accomplishing any surface preparation or coating application. The painting Contractors and painting Subcontractors must remain so certified for the duration of the project. If a Contractor's or Subcontractor's certification expires, the firm will not be allowed to perform any work until the certification is reissued. Requests for extension of time for any delay to the completion of the project due to an inactive certification will not be considered and liquidated damages will apply. Notify the Contracting Officer of any change in Contractor certification status.

1.4.6.9 Joint Sealant Materials

Provide manufacturer's certification of conformance to contract requirements.

1.4.6.10 Coating Materials

Provide manufacturer's certification of conformance to contract requirements.

1.4.6.11 Coating System Component Compatibility

Provide certification from each manufacturer of components of the coating system, epoxy primer, epoxy intermediate, and polyurethane topcoat, that the supplied coating material is suitable for use in the specified coating system. Each manufacturer shall identify the specific products, including manufacturer's name, which their product may be used with. The certification shall provide the name of the manufacturer that will provide technical support for the entire system. When all coating materials are manufactured by one manufacturer, this certification is not required.

1.4.6.12 Non-metallic Abrasive

Provide manufacturer's certification that the materials are currently approved by the Naval Sea Systems Command and listed on the Qualified Products Lists (QPL) for the specified materials.

1.4.6.13 Metallic Abrasive

Provide manufacturer's certification of conformance to contract requirements and provide copies of test results.

1.4.7 Protective Coating Specialist (PCS)

The PCS shall be considered a QC Specialist and shall report to the QC Manager, as specified in Section 01 45 00.00 20 NAVFAC QUALITY CONTROL. The PCS shall approve all submittals prior to submission to the QC Manager for approval or submission to the government for approval.

1.4.8 Pre-Application Meeting

After approval of submittals but prior to the initiation of coating work, Contractor representatives, including at a minimum, project superintendent and QC manager, paint foreman, coating inspector, and PCS shall have a pre-application coating preparatory meeting. This meeting shall be in addition to the pre-construction conference. Specific items addressed shall include: corrective action requirements and procedures, coating work plan, safety plan, coordination with other Sections, inspection standards, inspection requirements and tools, test procedures, environmental control system, safety plan, and test logs. Notify Contracting Officer at least ten days prior to meeting.

1.5 PRODUCT DATA

1.5.1 Joint Sealant Instructions

Submit manufacturer's printed instructions including detailed application procedures, minimum and maximum application temperatures, and curing procedures. Include materials safety data sheets (MSDS) for materials to be used at the job site in accordance with 29 CFR 1926.59.

1.5.2 Coating System Instructions

Submit manufacturer's printed instructions including detailed mixing and application procedures, number and types of coats required, minimum and maximum application temperatures, and curing procedures. Include materials safety data sheets (MSDS) for materials to be used at the job site in accordance with 29 CFR 1926.59.

1.6 DELIVERY AND STORAGE

Ship, store, and handle materials in accordance with SSPC PA 1, and as modified in this Section. Maintain temperature in storage spaces between 40 and 85 degrees F, and air temperature more than 5 degrees F above the dew-point at all times. Inspect materials for damage prior to use and return non-compliant materials to manufacturer. Remove materials with expired shelf life from government property immediately and notify the Contracting Officer.

If materials are approaching shelf life expiration and an extension is desired, samples may be sent to the manufacturer, along with complete records of storage conditions, with a request for shelf life extension. If the manufacturer finds the samples and storage data suitable for shelf life extension, the manufacturer may issue an extension, referencing the product evaluation and the review of storage records. Products may not be extended longer than allowed in the product specification.

1.7 COATING HAZARDS

Ensure that employees are trained in all aspects of the safety plan. Specified coatings may have potential health hazards if ingested or improperly handled. The coating manufacturer's written safety precautions shall be followed throughout mixing, application, and curing of the coatings. During all cleaning, cleanup, surface preparation, and paint application phases, ensure that employees are protected from toxic and hazardous chemical agents which exceed concentrations in 29 CFR 1910.1000. Comply with respiratory protection requirements in 29 CFR 1910.134. The CIH shall approve work procedures and personal protective equipment.

1.8 JOB SITE REFERENCES

Make available to the Contracting Officer at least one copy each of ASTM D3276, ASTM D3925, ASTM D4285, ASTM D7127, SSPC SP COM, SSPC SP 1, SSPC 7/NACE No.4, SSPC SP 10/NACE No. 2, SSPC PA 1, SSPC PA 2, SSPC Guide 6, SSPC VIS 1, SSPC QP 1, SSPC QS 1, and an SSPC Certified Contractor Evaluation Form at the job site.

PART 2 PRODUCTS

2.1 JOINT SEALANT

TT-S-00230, Type II, Class B

2.2 COATING SYSTEM

Alternate systems or products will not be considered. All primer, intermediate coat and topcoat materials shall be supplied by one supplier. The entire coating system is intended to be applied in the field. Alternatively, surface preparation may be accomplished in the shop, following all temperature, humidity, and testing requirements listed herein, followed by an application of a hold-primer. Remove all shop-applied primer prior to final field surface preparation and coating system application. Adjust all shop preparation to avoid conflicts with final surface preparation requirements.

The Military specification epoxy and polyurethane products specified in this Section do not require approval for listing on the QPL prior to contract award, as indicated in paragraph 3.2 of MIL-DTL-24441 and paragraph 3.1 of MIL-PRF-85285. Testing of products by an independent laboratory to the QUALIFICATION INSPECTION requirements of MIL-DTL-24441 and MIL-PRF-85285prior to contract award is required. See specific submittal requirements in paragraph QUALITY ASSURANCE.

2.2.1 Zinc-Rich Epoxy Primer Coat

Epoxy polyamide, MIL-DTL-24441/19 (Formula 159, Type III).

2.2.2 Epoxy Intermediate Coat

Epoxy polyamide, MIL-DTL-24441/31 (Formula 152, Type IV, White (Tinted)). Tint to approximately FED-STD-595 color number 27778 parchment using pigment dispersions prepared for epoxy paint tinting. Manufacturer shall tint material and appropriately label. All other requirements of this Military Specification apply.

2.2.3 Polyurethane Topcoat

Polyurethane coating topcoat of MIL-PRF-85285, Type II, White FED-STD-595 color number 17925. Topcoat shall be safety yellow to identify all areas on tops of tanks where non-skid grit has been applied.

Modify paragraph 3.6.4 of MIL-PRF-85285, Viscosity and Pot Life, as follows:

> The viscosity of the admixed coating, when tested in accordance with ASTM D1200 through a No. 4 Ford cup, shall be as follows:

Time from mix (minimum)	Maximum time through a No. 4 Ford cup
Initially	30 seconds
2 hours	60 seconds
4 hours	No gel

Modify paragraph 3.7.1 of MIL-PRF-85285, Drying Time, as follows:

When applied by spray techniques and when tested in accordance with ASTM D1640, the coating shall be set-to-touch within four hours and dry-hard within eight hours (see 4.6 and table I).

2.3 COLOR IDENTIFICATION OF FUEL HANDLING AND STORAGE FACILITIES

Piping, conduit, and tank identification shall be in accordance with MIL-STD-161. Mark direction of fluids in accordance with MIL-STD-161. The NATO symbol for Jet-A fuel with additives is F-24.

2.4 COATING SAMPLE COLLECTION AND SHIPPING KIT

Provide a kit that contains one quart can for the base of each coating material, an appropriately sized can for each activator, dipping cups for each component to be sampled, a shipping box sized for the samples to to be shipped, and packing material. Mark cans for the appropriate component. Provide shipping documents, including either pre-paid shipping or a shipper number that can be used by the QC Manager to arrange pickup, addressed to the approved coating testing laboratory.

2.5 ABRASIVE SAMPLE COLLECTION AND SHIPPING KIT

Provide a kit that contains one suitable plastic bag or container for each sample to be collected. Mark containers for the appropriate component. Provide shipping documents, including either pre-paid shipping or a shipper number that can be used by the QC Manager to arrange pickup, addressed to the approved coating testing laboratory.

2.6 TEST KITS

2.6.1 Test Kit for Measuring Chloride, Sulfate and Nitrate Ions on Steel and Coated Surfaces

Provide test kits called CHLOR*TEST CSN Salts, as manufactured by CHLOR*RID International Inc. of Chandler, Arizona (www.chlor-rid.com) or equal. An "equal" test kit shall meet the following requirements:

a. Kit contains all materials,supplies, tools and instructions for field testing and on-site quantitative evaluation of chloride, sulfate and nitrate ions;

b. Kit extract solution is acidic, factory pre-measured, pre-packaged, and of uniform concentration;

c. Kit components and solutions are mercury free and environmentally friendly;

d. Kit contains new materials and solutions for each test extraction;

e. Extraction test container (vessel, sleeve, cell. etc.) creates a sealed, encapsulated environment during salt ion extraction;

f. Test extract container is suitable for testing the following steel surfaces: horizontal (up/down configuration), vertical, flat, curved, smooth, pitted, and rough;

g. All salt ion concentrations are directly measured in micrograms per square centimeter.

2.6.2 Test Kit for Identifying Amine Blush on Epoxy Surfaces

After coating and/or primer has hardened and prior to applying the next coat, test for unreacted amines using the AMINE BLUSH CHECK, manufactured by Elcometer, Rochester Hills, Michigan, or equal. To be considered for approval as an "equal" test kit it shall meet the following requirements:

a. Be a completely self-contained field test kit with all materials, supplies, tools and instructions to perform tests and indicate the presence of unreacted amines;

b. Use an identifiable, consistent, uniform, pre-packaged, factory pre-measured indicating solution;

c. Kit contains no mercury or lead and is environmentally friendly;

d. Kit contains a solution of an unreacted amine for the purpose of "self checking" the indicator solution;

2.7 ABRASIVE

The referenced abrasive specifications have maximum limits for soluble salts contamination, however, this maximum level of contamination does not guarantee that contamination will not be transferred to the steel surface during abrasive blasting. Other factors such as on-site handling and recycling can allow contamination of abrasive. Contractors are cautioned to verify that the chosen abrasive, along with work and storage processes, allow the final surface cleanliness requirements to be achieved. Successful testing of chlorides in abrasive does not negate the final acceptance testing of steel surfaces.

2.7.1 Non-metallic Abrasive

Conform to MIL-A-22262, Type I (Inorganic materials). Abrasive shall be approved by the Naval Sea Systems Command and listed on the appropriate Qualified Products List (QPL) for the specified materials. Use sampling procedures and testing frequencies as prescribed in MIL-A-22262. Use abrasive that is specifically selected and graded to provide a sharp, angular profile to the specified depth. Do not use ungraded abrasive. Make adjustments to processes or abrasive gradation to achieve specified surface profile. Recycled non-metallic abrasive shall meet all requirements of the specification each time that it is placed in the blast pot.

2.7.2 Metallic Abrasive

2.7.2.1 New and Remanufactured Steel Grit

Conform to the chemical and physical properties of SSPC AB 3 Class 1 (Steel) only. Class 2 (Iron) abrasive shall not be used.

To develop a suitable work mix from new steel abrasive, a minimum of 200 - 400 recycles is required, therefore, it is advantageous for a Contractor to use remanufactured steel grit or grit reclaimed from a previous project. Such grit shall be considered to conform if it can be traced to new grit conforming to SSPC AB 3 Class 1 and it meets all cleanliness requirements of SSPC AB 3 Class 1 when brought to the current jobsite. Submit one representative sample of this work mix to the laboratory for testing, along with samples of new material. Acceptance and use of this work mix shall not be used to justify any deviation from surface preparation requirements.

2.7.2.2 Recycled Steel Grit

Conform to the chemical and physical properties of SSPC AB 2

2.8 White Aluminum Oxide Non-skid Grit

Size #60, dust free (washed and dry), minimum 99 percent pure, having the following sieve analysis when tested in accordance with ASTM E11 using a 2.2 poundsample:

Sieve #	Percent Retained
40	0
50	15-40
60	60-85

PART 3 EXECUTION

Perform all work, rework, and repair in accordance with approved procedures in the Coating Work Plan.

3.1 COATING AND ABRASIVE SAMPLE COLLECTION AND TESTING

Sample and test materials delivered to the jobsite. Notify Contracting Officer three days in advance of sampling. The QC Manager and either the PCS or coating inspector shall witness all sampling.

3.1.1 Coating Sample Collection

Provide a sample collection kit as required in paragraph COATING SAMPLE COLLECTION AND SHIPPING KIT. From each lot, obtain a one quart sample of each base material, and proportional samples of each activator based on mix ratio, by random selection from sealed containers in accordance with ASTM D3925. Prior to sampling, mix contents of each sealed container to ensure uniformity. As an alternative to collecting small samples from kits, entire kits may be randomly selected and shipped to laboratory, observing all requirements for witnessing and traceability. For purposes of quality conformance inspection, a lot is defined as that quantity of

materials from a single, uniform batch produced and offered for delivery at one time. A batch is defined as that quantity of material processed by the manufacturer at one time and identified by number on the label. Identify samples by designated name, specification number, batch number, project contract number, sample date, intended use, and quantity involved. The QC manager will take possession of the packaged samples, contact the shipping company to arrange for pickup, and relinquish the samples only to the shipping representative for shipment to the approved laboratory for testing as required by the paragraph COATING SAMPLE TEST REPORTS.

3.1.2 Abrasive Sample Collection

Provide a sample collection kit as required in paragraph ABRASIVE SAMPLE COLLECTION AND SHIPPING KIT. For purposes of quality conformance inspection, a lot shall consist of all abrasive materials of the same type from a single, uniform batch produced and offered for delivery at one time. Obtain samples of each abrasive lot using the sampling techniques and schedule of MIL-A-22262. The addition of any substance to a batch shall constitute a new lot. Identify samples by designated name, specification number, lot number, project contract number, sample date, intended use, and quantity involved. The QC manager will take possession of the packaged samples, contact the shipping company to arrange for pickup, and relinquish the samples only to the shipping representative for shipment to the approved laboratory for testing as required by the paragraph ABRASIVE SAMPLE TEST REPORTS.

3.1.3 Coating Sample Test Reports

Submit test results for each lot of coating material delivered to the jobsite. Test samples of primer, intermediate, and topcoat materials for compliance with requirements of Table I. Reject entire lot represented by samples that fail one or more tests, select new lots, and test samples.

3.1.4 Abrasive Sample Test Reports

Submit test results for each lot of abrasive delivered to the jobsite. Test samples of metallic abrasive to the requirements of paragraph REQUIREMENTS of SSPC AB 3, except paragraph 4.1.5 DURABILITY. Test samples of non-metallic abrasive as required in paragraph QUALITY CONFORMANCE INSPECTION of MIL-A-22262. Reject entire lot represented by samples that fail one or more tests, select new lots, and test samples.

3.2 SURFACES TO BE COATED

Coat exterior surfaces of tanks 501 and 502 structure including steel roof, shell, legs, stair, railing, and other exterior appurtenances as required by tank modification work. Exterior of JP-5 day tanks, Corrosion Inhibitor tank, and F-24 breakout tank including shell, legs, stair, platform and other exterior appurtenances. All aboveground carbon steel piping systems and equipment.

3.3 LIGHTING

Provide lighting for all work areas as prescribed in SSPC Guide 12.

3.4 ENVIRONMENTAL CONDITIONS

3.4.1 Containment

Design and provide a containment system for the capture, containment, collection, storage and disposal of the waste materials generated by the work under this Section, to meet the requirements of SSPC Guide 6, Class 3. Vapor concentrations shall be kept at or below 10 percent of Lower Explosive Limit (LEL) at all times. Containment may be designed as fixed containment for complete structure or portable containment for sections of structure, however, containment shall remain in any one place from beginning of abrasive blasting through initial cure of coating. Waste materials covered by this paragraph shall not include any material or residue from removal of coatings containing lead, chromium, cadmium, PCB, or any other hazardous material.

It is the Contractors responsibility to insure the feasibility and workability of the containment system. The Contractor shall perform his operations and work schedule in a manner as to minimize leakage of the containment system. The containment system shall be properly maintained and shall not deviate from the approved drawings. If the containment system fails to function satisfactorily, the Contractor shall suspend all operations, except those required to minimize adverse impact on the environment or government property. Operations shall not resume until modifications have been made to correct the cause of the failure.

3.4.2 Automated Monitoring Requirements

Provide continuous monitoring of temperature, relative humidity, and dew point data at pertinent points on the structure, during surface preparation, coating application, and initial cure. Locate sensors to provide pertinent data for the surface preparation and coat application being performed. Monitor any heating, cooling, or dehumidification equipment used. Make data available to the Contracting Officer through Internet access. Provide monitoring equipment to perform as follows:

a. Data is collected in the field unit in one minute increments, and available for download (on-site) in a standard format. Contractor shall collect this data and make available to the Contracting Officer;

b. Monitoring equipment shall have backup power such that data collection and transmission to web server will be uninterrupted during the entire period of the dehumidification requirement;

c. Monitoring equipment shall have capability to measure surface temperatures at a minimum of four locations anywhere on a 150 foot diameter by 50 foot high tank;

d. Monitoring equipment shall have capability to measure interior and exterior dry bulb temperature (DB), relative humidity (RH), and dewpoint temperature (DP);

e. Data shall be available continuously through secure Internet connection, using widely available web browsers;

f. Internet accessible data shall be collected and stored in maximum 15 minute increments, and lag time between data collection and online availability shall be no greater than 70 minutes;

g. Internet accessible data shall be available for viewing online in tabular format, and graphical format using selected data;

h. Internet accessible data shall be available for download in user-defined segments, or entire project to date, in a standard format usable by Microsoft Excel and other spreadsheet programs.

i. Internet-based controls shall provide alerts to pre-designated parties through e-mail messaging;

j. Internet-based controls shall monitor data uploads from field unit and issue alert if data not initiated within 60 minutes of last upload;

k. Internet-based controls shall monitor operation of DH equipment and issues alert when power remains off for more than 15 seconds, or if pre-determined temperature, RH, or DP conditions are exceeded;

The requirements listed here were developed around the Munters Exactaire Monitoring System, as this was the only monitoring system having Internet connectivity known to be commercially available. There is no requirement for connectivity of the monitoring system to control the DH equipment, therefore, any combination of equipment having the required functionality will be accepted.

3.5 SURFACE PREPARATION

3.5.1 Abrasive Blasting Equipment

Use abrasive blasting equipment of conventional air, force-feed, or pressure type. Maintain a minimum pressure of 95 psig at nozzle. Confirm that air supply for abrasive blasting is free of oil and moisture when tested in accordance with ASTM D4285. Test air quality at each startup, but in no case less often than every five operating hours.

3.5.2 Operational Evaluation of Abrasive

Test abrasive for salt contamination and oil contamination as required by the appropriate abrasive specification daily at startup and every five operating hours thereafter.

3.5.3 Surface Standard

Inspect surfaces to be coated, and select plate with similar properties and surface characteristics for use as a surface standard. Blast clean one or more 1 foot square steel panels as specified in paragraph SURFACE PREPARATION. Record blast nozzle type and size, air pressure at nozzle and compressor, distance of nozzle from panel, and angle of blast to establish procedures for blast cleaning. Measure surface profile in accordance with ASTM D7127. When the surface standard complies with all specified requirements, seal with a clearcoat protectant. Use the surface standard for comparison to abrasive blasted surfaces throughout the course of work.

3.5.4 Pre-Preparation Testing for Surface Contamination

Perform testing, abrasive blasting, and testing in the prescribed order.

3.5.4.1 Pre-Preparation Testing for Oil and Grease Contamination

Inspect all surfaces for oil and/or grease contamination using two or more

of the following inspection techniques: 1) Visual inspection, 2) WATER BREAK TEST, 3) CLOTH RUB TEST. Reject oil and/or grease contaminated surfaces, clean using a water based pH neutral degreaser in accordance with SSPC SP 1, and recheck for contamination until surfaces are free of oil and grease.

WATER BREAK TEST - Spray atomized mist of distilled water onto surface, and observe for water beading. If water "wets" surface rather than beading up, surface can be considered free of oil or grease contamination. Beading of water (water forms droplets) is evidence of oil or grease contamination.

CLOTH RUB TEST - Rub a clean, white, lint free, cotton cloth onto surface and observe for discoloration. To confirm oil or grease contamination in lightly stained areas, a non-staining solvent may be used to aid in oil or grease extraction. Any visible discoloration is evidence of oil or grease contamination.

3.5.4.2 Pre-Preparation Testing for Soluble Salts Contamination

Test surfaces for soluble salts, and wash as required, prior to abrasive blasting. Soluble salt testing is also required in paragraph PRE-APPLICATION TESTING FOR SOLUBLE SALTS CONTAMINATION as a final acceptance test of prepared surfaces after abrasive blasting, and successful completion of this phase does not negate that requirement. This phase is recommended since pre-preparation testing and washing are generally more advantageous than attempting to remove soluble salt contamination after abrasive blasting. Effective removal of soluble salts will require removal of any barrier to the steel surface, including rust. This procedure may necessitate combinations of wet abrasive blasting, high pressure water rinsing, and cleaning using a solution of water washing and soluble salts remover. The soluble salts remover shall be acidic, biodegradable, nontoxic, noncorrosive, and after application, will not interfere with primer adhesion. Delays between testing and preparation, or testing and coating application, may allow for the formation of new contamination. Use potable water, or potable water modified with soluble salt remover, for all washing or wet abrasive blasting. Test methods and equipment used in this phase are selected at the Contractor's discretion.

3.5.5 Abrasive Blasting

Abrasive blast steel surfaces to near-white metal in accordance with SSPC SP 10/NACE No. 2. Prepared surfaces shall conform to SSPC VIS 1 and shall match the prepared test-panels. Provide a 2 to 3 mil surface profile. Reject profile greater than 3 mils, discontinue abrasive blasting, and modify processes and materials to provide the specified profile. Measure surface profile in accordance with ASTM D7127, using Rmax as the measure of profile height. Record all measurements required in this standard. Measure profile at rate of three test areas for the first 1000 square feet plus one test area for each additional 1000 square feet or part thereof. When surfaces are reblasted for any reason, retest profile as specified. Following abrasive blasting, remove dust and debris by vacuum cleaning. Do not attempt to wipe surface clean.

3.5.6 Disposal of Used Abrasive

Dispose of used abrasive off Government property in accordance with Federal, State, and Local mandated regulations.

3.5.7 Pre-Application Testing For Surface Contamination

3.5.7.1 Pre-Application Testing for Oil and Grease Contamination

Ensure surfaces are free of contamination as described in paragraph PRE-PREPARATION TESTING FOR OIL AND GREASE CONTAMINATION, except that only questionable areas need be checked for beading of water misted onto surface.

3.5.7.2 Pre-Application Testing for Soluble Salts Contamination

Test surfaces for chloride contamination using the Test Kit described in TEST KIT FOR MEASURING CHLORIDE, SULFATE AND NITRATE IONS ON STEEL AND COATED SURFACES. Test all surfaces at rate of three tests for the first 1000 square feet plus one test for each additional 2000 square feet or part thereof. Perform 30 percent of tests on bare steel at welds, divided equally between horizontal and vertical welds. One or more readings greater than 3 micrograms per square centimeter of chlorides or 10 micrograms per square centimeter of sulfates or 5 micrograms per square centimeter of nitrates is evidence of soluble salt contamination. Reject contaminated surfaces, wash as discussed in paragraph PRE-PREPARATION TESTING FOR SOLUBLE SALTS CONTAMINATION, allow to dry, and re-test until all required tests show allowable results. Reblast tested and cleaned areas as required. Label all test tubes and retain for test verification.

3.5.7.3 Pre-Application Testing for Surface Cleanliness

Apply coatings to dust free surfaces. To test surfaces, apply strip of clear adhesive tape to surface and rub onto surface with finger. When removed, the tape should show little or no dust, blast abrasive, or other contaminant. Reject contaminated surfaces and retest. Test surfaces at rate of three tests for the first 1000 square feet plus one test for each additional 1000 square feet or part thereof. Provide two additional tests for each failed test or questionable test. Attach test tapes to Daily Inspection Reports.

3.6 MIXING AND APPLICATION OF SEALANT AND COATING SYSTEM

3.6.1 Preparation of Sealant and Coating Materials for Application

Each of the sealant, primer, intermediate, and topcoat materials is a two-component material supplied in separate containers.

3.6.1.1 Mixing Sealant, Primer and Intermediate Coat Materials

Mix in accordance with manufacturer's instructions, which may differ for each product. Do not mix partial kits, or alter mix ratios. Mix materials in same temperature and humidity conditions specified in paragraph DELIVERY AND STORAGE. Allow mixed material to stand for the required induction time based on its temperature.

3.6.1.2 Mixing Topcoat Material

Do not mix partial kits, or alter mix ratios. Mix polyurethane coating materials in same temperature conditions specified in paragraph DELIVERY AND STORAGE. The polyurethane coating material is moisture sensitive and any introduction of moisture or water into the material during mixing or application will shorten usable pot life. Use a mixer that does not create a vortex. Do not add solvent without specific written recommendation from the manufacturer. No induction time is required, only thorough agitation

of the mixed material.

3.6.1.3 Pot Life

Apply mixed products within stated pot life for each product. Stop applying when material becomes difficult to apply in a smooth, uniform wet film. Add all required solvent at time of mixing. Do not add solvent to extend pot life. Pot life is based on standard conditions at 70 degrees F and 50 percent relative humidity. For every 18 degrees F rise in temperature, pot life is reduced by approximately half, and for every 18 degrees F drop it is approximately doubled. Usable pot life depends on the temperature of the material at the time of mixing and the sustained temperature at the time of application. Other factors such as the shape of the container and volume of mixed material may also affect pot life. Precooling or exterior icing of components for at least 24 hours to a minimum of 50 degrees F in hot climates will extend pot life. High humidity at time of mixing and application shortens pot life of the Polyurethane topcoat material. Following are approximate pot life times:

Sealant	As specified by manufacturer
Epoxy primer and intermediate materials	4 hours
Polyurethane topcoat materials	2 hours.

3.6.1.4 Application Conditions and Recoat Windows

The application condition requirements for the coating system are very time and temperature sensitive, and are intended to avoid the delamination problems frequently found on industrial structures. Plan coating application to ensure that specified temperature, humidity, and condensation conditions are met. If conditions do not allow for orderly application of sealant, primer, stripe coat, intermediate coat and topcoat, use appropriate means of controlling air and surface temperatures, as required. Partial or total enclosures, insulation, heating or cooling, or other appropriate measures may be required to control conditions to allow for orderly application of all required coats.

Maintain air and steel surface temperature between 60 and 100 degrees F during application and the first four hours of cure for epoxy coats and the first eight hours of cure for polyurethane coats. Maintain steel surface temperature more than 5 degrees F above the dew-point of the ambient air for the same period.

Use Table entitled "RECOAT WINDOWS" to determine appropriate recoat windows for each coat after the initial coat. Apply each coat during appropriate RECOAT WINDOW of preceding coat. If a RECOAT WINDOW is missed, the minimum and maximum primer and intermediate coat thickness may be adjusted to accommodate a FILL COAT, however, requirements for total epoxy coating thickness and total coating thickness will not be modified. Missing more than one RECOAT WINDOW may require complete removal of coating if maximum total coating thickness requirements cannot be achieved.

If coating is not applied during RECOAT WINDOW, or if surface temperature exceeds 120 degrees F between applications, provide GLOSS REMOVAL, apply next coat within 24 hours. If next planned coat is topcoat, apply FILL COAT if required to fill sanding marks. Sanding marks from GLOSS REMOVAL of intermediate coat reflecting through topcoat will be considered as noncompliant. Apply FILL COAT within 24 hours of GLOSS REMOVAL, then apply topcoat within RECOAT WINDOW of FILL COAT.

RECOAT WINDOWS						
EPOXY OVER EPOXY						
Temperature degrees F	60-70	71-80	12-36	91-100	101-110	111-120
RECOAT WINDOW (Hrs.)	24-72	18-60	16-48	12-36	8-18	4-6
POLYURETHANE OVER EPOXY						
Temperature degrees F	60-70	71-80	12-36	91-100	101-110	111-120
RECOAT WINDOW (Hrs.)	24-96	24-72	16-48	12-36	10-24	8-16
POLYURETHANE OVER POLYURETHANE						
Temperature degrees F	60-70	71-80	12-36	91-100	101-110	111-120
RECOAT WINDOW (Hrs.)	8-48	6-48	4-36	3-24	2-12	1-2

The temperature ranges shown in the table above are for determining recoat windows. Choose recoat window based on the highest surface temperature that was sustained for one or more hours between coats. This applies to the entire time between coats. Measure and record air and surface temperatures on hourly basis to determine appropriate recoat windows. If surface temperature goes above 100 degrees F, measure and record temperatures every half hour.

FILL COAT - Where indicated, apply coat of intermediate coat epoxy, at 2 to 3 mils DFT, then apply next specified full coat within recoat window of FILL COAT. A FILL COAT may be used to adjust coating thickness to comply with requirements or to fill sanding marks in intermediate coat.

GLOSS REMOVAL - Where required, hand sand in a linear fashion to remove gloss using 120-200 grit wet/dry sandpaper, followed by solvent wiping with a clean rag soaked with denatured alcohol to remove all dust. GLOSS REMOVAL of primer coat is to scarify surface and shall consist of removal of approximately 1 mil of coating. If steel is exposed during GLOSS REMOVAL, repair in accordance with paragraph PROCEDURE FOR HOLIDAY AND SPOT REPAIRS OF NEWLY APPLIED COATING. GLOSS REMOVAL of intermediate coat may include removal of up to 3 mils of coating to avoid excess thickness, prior to application of FILL COAT.

3.6.2 Amine Blush Testing of Epoxy Coat Prior to Overcoating

Test epoxy surfaces prior to application of roof joint sealant, epoxy coat, or polyurethane topcoat for amine blush contamination using the Test Kit described in paragraph TEST KIT FOR IDENTIFYING AMINE BLUSH ON EPOXY SURFACES. Test all surfaces at rate of three tests for the first 1000 square feet plus one test for each additional 2000 square feet or part thereof. Remove any identified contamination using an approved procedure.

3.6.3 Application of Coating System and Joint Sealant

Apply coatings in accordance with SSPC PA 1 and as specified herein. Apply coatings to surfaces that meet all stated surface preparation requirements.

After application of primer coat and prior to application of each subsequent coat, perform testing prescribed in paragraph PRE-APPLICATION TESTING FOR SURFACE CONTAMINATION, as necessary, to ensure minimal intercoat contamination. This testing may be reduced to one half of the prescribed rate for bare steel if the testing indicates no contamination when sampling is evenly distributed over surfaces being tested. If contamination is found between coats, revert to the specified testing rate. Generally, oil and grease contamination and soluble salts contamination are not encountered if subsequent coats are applied within specified recoat windows and unusual atmospheric events do not occur. Such atmospheric events as a coastal storm blowing onshore can bring unusual chloride contamination. Concern for intercoat contamination should be continually prevalent, and spot testing should be accomplished to verify satisfactory conditions. Where visual examination or spot testing indicates contamination, perform sufficient testing to verify non-contamination, or to define extent of contamination for appropriate treatment.

Apply each coat in a consistent wet film, at 90 degrees to previous coat. Ensure that primer and intermediate coat "cold joints" are no less than six inches from welds. Apply stripe coat by brush. For convenience, stripe coat material may be delivered by spray if followed immediately with brush-out and approved procedures include appropriate controls on thickness. Apply all other coats by spray application. Use appropriate controls to prevent airborne coating fog from drifting beyond 15 feet from the structure perimeter. Cover or protect all surfaces that will not be coated. The cleanliness, temperature, recoat windows, and airborne paint containment requirements may necessitate the use of enclosures, portable shelters, or other appropriate controls.

Apply coatings at the following specified thickness:

Coat	Minimum DFT (Mils)	Maximum DFT (Mils)
Primer	3	5
Intermediate	3	5
Top	2	3
Total system	8	13

3.6.3.1 Application of Primer

Apply primer coat, maintaining paint supply container height within 3 feet of the paint nozzle for applying zinc primer. Maintain constant agitation of paint pot to ensure that zinc does not settle in container.

3.6.3.2 Application of Stripe Coat

Apply a stripe coat of intermediate coat epoxy material within RECOAT WINDOW of primer, allowing sufficient dry time to allow application of intermediate coat within RECOAT WINDOW of primer. Apply by brush, working material into corners, crevices, angles, and welds, and onto outside corners and angles.

3.6.3.3 Application of Intermediate Coat

Apply intermediate coat within RECOAT WINDOW of primer coat.

3.6.3.4 Non-skid for Stairs and Top

Where non-skid is required, apply a second intermediate coat, and immediately follow with application of non-skid grit, broadcast at the rate of 2 pounds per 100 square feet, and backroll. Apply yellow topcoat over all areas of non-skid grit application.

3.6.3.5 Application of Topcoat

Make all required repairs to primer and intermediate coats as specified in paragraph entitled "Procedure for Holiday and Spot Repairs of Newly Applied Coating" prior to applying topcoat. Apply topcoat within RECOAT WINDOW of intermediate coat. The polyurethane topcoat may require multiple passes to achieve desired aesthetics and required thickness. Consult manufacturer for thinning and application procedures for anticipated temperature, humidity, and wind conditions. Touch-up blemishes and defects within recoat window of polyurethane topcoat. Retain sample of polyurethane topcoat, from the same batch used to coat structure, to make touch-ups that might be required later.

3.6.3.6 Application of Joint Sealant

Apply joint sealant to back-to-back steel joints that are less that 3/8 inches wide and are not seal welded. Apply sealant to top and bottom, or each side, of narrow joints. Apply sealant within 48 hours of application of the topcoat, and touch-up with topcoat after appropriate cure of the sealant.

3.6.3.7 Procedure for Holiday and Spot Repairs of Newly Applied Coating

Repair coating film defects at the earliest practicable time, preferably before application of the succeeding coat. Observe all requirements for soluble salts contamination, cleanliness between coats, and application conditions. Prepare defective area in accordance with SSPC SP 10/NACE No. 2, and feather coating as required to leave 4 inches of each succeeding coat feathered and abraded. Protect adjacent areas from damage and overspray. Remove dust and solvent wipe the prepared area plus an additional 4 inches beyond the prepared area with clean denatured alcohol. Apply each coat within RECOAT WINDOW of preceeding coat. Within four hours of preparation, apply zinc-rich primer to prepared steel and feather onto prepared primer. Apply intermediate coat to primed area and feather to prepared intermediate area. Apply topcoat to intermediate coat and feather to prepared topcoat. Apply each repair coat to approximate thickness of surrounding coating system.

3.6.3.8 Structure Occupancy After Coating Application

Use clean canvas or other approved shoe covers when walking on coated surfaces, regardless of curing time allowed. For heavily trafficked areas, provide cushioned mats for additional protection.

3.7 PROJECT IDENTIFICATION

At the completion of the work, stencil the following information on the tank exterior adjacent to the main manway opening in 3/4 to one inch Helvetica style letters of contrasting color using acrylic stencil paint:

Date exterior coated:
Project Number:
Contractor:
Address:
Coating System
Surface Prep: SSPC SP ____ Profile: _____
Primer: _____ Thickness: ____
Intermediate: _____ Thickness: ____
Topcoat: _____ Thickness: ____
Total Thickness: _____

3.8 FIELD QUALITY CONTROL

For marking of tank surfaces, use chalk for marking bare steel, and water based markers for marking coated surfaces, and remove marks prior to coating. Do not use any wax or grease based markers, or any other markers that leave a residue or stain.

3.8.1 Coating Inspector

The coating inspector shall be considered a QC Specialist and shall report to the QC Manager, as specified in Section 01 45 00.00 20 NAVFAC QUALITY CONTROL. The Coating Inspector shall be present during all pre-preparation testing, surface preparation, coating application, initial cure of the coating system, during all coating repair work, and during completion activities as specified in Section 01 45 00.00 20 NAVFAC QUALITY CONTROL. The Coating Inspector shall provide complete documentation of conditions and occurrences on the job site, and be aware of conditions and occurrences that are potentially detrimental to the coating system. The requirements for inspection listed in this Section are in addition to the QC inspection

and reporting requirements specified in Section 01 45 00.00 20 NAVFAC QUALITY CONTROL.

3.8.2 Field Inspection

3.8.2.1 Inspection Requirements

Perform field inspection in accordance with ASTM D3276 and the approved Coating Work Plan. Document Contractor's compliance with the approved Coating Work Plan.

Provide all tools and instruments required to perform the required testing, as well as any tools or instruments that the inspector considers necessary to perform the required inspections and tests. Document each inspection and test, including required hold points and other required inspections and tests, as well as those inspections and tests deemed prudent from on-site evaluation to document a particular process or condition, as follows:

a. Location or area;

b. Purpose (required or special);

c. Method;

d. Criteria for evaluation;

e. Results;

f. Determination of compliance;

g. List of required rework;

h. Observations.

Collect and record Environmental Conditions as described in ASTM D3276 on a 24 hour basis, as follows:

a. During surface preparation, every two hours or when changes occur;

b. During coating application and the first four days of initial cure, every hour, or when changes occur;

c. Note location, time, and temperature of the highest and lowest surface temperatures each day;

d. Use a non-contact thermometer to locate temperature extremes, then verify with contact thermometers.

Document all equipment used in inspections and testing, including manufacturer, model number, serial number, last calibration date and future calibration date, and results of on-site calibration performed.

Document Contractors compliance with the approved Coating Work Plan.

3.8.2.2 Inspection Report Forms

Develop project-specific report forms as required to report measurements, test results, and observations being complete and and conforming to contract requirements. This includes all direct requirements of the

contract documents and indirect requirements of referenced documents. Show acceptance criteria with each requirement and indication of conformity of each inspected item. The data may be in any format, but must be legible and presented so that entered data can be quickly compared to the appropriate requirement.

3.8.2.3 Daily Inspection Reports

Submit one copy of daily inspection report completed each day when performing work under this Section, to the Contracting Officer. Note all non-compliance issues, and all issues that were reported for rework in accordance with QC procedures of Section 01 45 00.00 20 NAVFAC QUALITY CONTROL. Each report shall be signed by the coating inspector and the QC Manager. Submit report within 24 hours of date recorded on the report.

3.8.2.4 Inspection Logbook

A continuous record of all activity related to this Section shall be maintained in an Inspection Logbook on a daily basis. The logbook shall be hard or spiral bound with consecutively numbered pages, and shall be used to record all information provided in the Daily Inspection Reports, as well as other pertinent observations and information. The Coating Inspector's Logbook that is sold by NACE is satisfactory. Submit the original Inspection Logbook to the Contracting Officer upon completion of the project and prior to final payment.

3.8.2.5 Inspection Equipment

All equipment shall be in good condition, operational within its design range, and calibrated as required by the specified standard for use of each device.

3.9 FINAL CLEANUP

Following completion of the work, remove debris, equipment, and materials from the site. Remove temporary connections to Government or Contractor furnished water and electrical services. Restore existing facilities in and around the work areas to their original condition.

TABLE 1

COATING QUALITY CONFORMANCE INSPECTION REQUIREMENTS

Table Ia - Zinc-rich Epoxy Primer Coat MIL-DTL-24441/19 Formula 159

Test	Component A		Component B		Mixed	
	Min.	Max.	Min.	Max.	Min.	Max.
Pigment content, percent (zinc dust)	---	---	81.5	85.5	---	---

TABLE 1

COATING QUALITY CONFORMANCE INSPECTION REQUIREMENTS

Table Ia - Zinc-rich Epoxy Primer Coat MIL-DTL-24441/19 Formula 159

Test	Component A		Component B		Mixed	
	Min.	Max.	Min.	Max.	Min.	Max.
Volatiles, percent	42.8	44.3	8.0	8.4	---	---
Non-volatile vehicle percent	53.7	57.7	8.3	8.7	---	---
Weight, Kilograms/liter	0.87	1.01	3.30	3.40	2.80	2.91
Weight, Pounds/gallon	7.3	8.4	27.5	28.4	23.4	24.4
Flashpoint, Degrees C	35.6	---	37.8	---	---	---
Flashpoint, Degrees F	96	---	100	---	---	---
Consistency, grams	---	---	250	500	150	300
Set to touch time, hours at 23 degrees C, 73 degrees F	---	---	---	---	---	2
Dry hard time, hours at 23 degrees C, 73 degrees F	---	---	---	---	---	8
Pot life, hours at 23 degrees C, 73 degrees F	---	---	---	---	4	---
Sag resistance, Micrometers	---	---	---	---	300	---
Sag resistance, Mils	---	---	---	---	12	---
VOC, Grams/liter	---	---	---	---	---	304
VOC, Pounds/gallon	---	---	---	---	---	2.5

NOTES: Test methods as specified in MIL-DTL-24441.

TABLE 1

COATING QUALITY CONFORMANCE INSPECTION REQUIREMENTS

Table Ib. - Epoxy Intermediate Coat MIL-DTL-24441/31 Formula 152 Type IV (White (Tinted))

Test	Component A		Component B		Mixed	
	Min.	Max.	Min.	Max.	Min.	Max.
Pigment content, percent	44.0	49.0	33.0	38.0	---	---
Volatiles, percent	29.0	35.0	16.0	21.0	---	---
Non-volatile vehicle percent	17.5	23.5	44.0	49.0	---	---
Coarse particles, percent	---	0.3	---	0.3	---	---
Consistency, grams	180	320	300	470	180	245
Weight, Kilograms/liter	1.39	1.45	1.29	1.35	1.34	1.4
Weight, Pounds/gallon	11.6	12.1	10.8	11.3	11.2	11.7
Set to touch time, hours at 23 degrees C, 73 degrees F	---	---	---	---	---	3
Dry hard time, hours at 23 degrees C, 73 degrees F	---	---	---	---	---	8
Fineness of grind, Hegman	4	---	4	---	---	---
Flashpoint, Degrees C	35.5	---	37.8	---	---	---
Flashpoint, Degrees F	96	---	100	---	---	---
Titanium dioxide, percent of pigment	91	---	---	---	---	---
Pot life, hours at 23 degrees C, 73 degrees F	---	---	---	---	4	---
Sag resistance, Micrometers	---	---	---	---	300	---
Sag resistance, Mils	---	---	---	---	12	---

TABLE 1

COATING QUALITY CONFORMANCE INSPECTION REQUIREMENTS

Table Ib. - Epoxy Intermediate Coat MIL-DTL-24441/31 Formula 152 Type IV (White (Tinted))

Test	Component A		Component B		Mixed	
	Min.	Max.	Min.	Max.	Min.	Max.
Color of dry film to approximate color of FED-STD-595 color 27778	---	---	---	---	---	Conform
Contrast ratio, at 75 micrometers, 3 mils DFT	---	---	---	---	.098	---
Gloss, 60 degree specular	---	---	---	---	35	---
VOC, Grams/liter	---	---	---	---	---	340
VOC, Pounds/gallon	---	---	---	---	---	2.8

GENERAL NOTES: Test methods as specified in MIL-DTL-24441.Where "Conform" is indicated, refer to specific requirements of MIL-DTL-24441/31.

TABLE I

COATING QUALITY CONFORMANCE INSPECTION REQUIREMENTS

Table Ic - Polyurethane TopcoatMIL-PRF-85285 Type II (White and Colors)

Test	Component A		Component B		Mixed	
	Min.	Max.	Min.	Max.	Min.	Max.
Moisture content, percent	---	2	---	---	---	---
Course particles, percent	---	---	---	---	---	.5
Viscosity	---	---	---	---	---	See Note 1
Fineness of grind, Hegman	---	---	---	---	7	---

TABLE I

COATING QUALITY CONFORMANCE INSPECTION REQUIREMENTS

Table Ic - Polyurethane TopcoatMIL-PRF-85285 Type II (White and Colors)

Test	Component A		Component B		Mixed	
	Min.	Max.	Min.	Max.	Min.	Max.
Drying to touch (See Note 2)	---	---	---	---	---	4
Dry-hard (See Note 2)	---	---	---	---	---	8
VOC, grams per liter	---	---	---	---	---	340
Color	---	---	---	---	delta E+-1.0	
Gloss 60 degree specular gloss						
Gloss	---	---	---	---	---	90
Semi-gloss	---	---	---	---	15	45
Opacity	---	---	---	---	0.95	---
Flexibility	---	---	---	---	---	Conform
Fluid resistance	---	---	---	---	---	Conform
Heat resistance (cure)	---	---	---	---	---	Conform
Solvent resistance (cure)	---	---	---	---	---	Conform
Condition in container	---	---	---	---	---	Conform
Odor	---	---	---	---	---	Conform
Lead percent	---	---	---	---	---	0.06
Cadmium percent	---	---	---	---	---	0.06
Chromium percent	---	---	---	---	---	0.00

TABLE I

COATING QUALITY CONFORMANCE INSPECTION REQUIREMENTS

Table Ic - Polyurethane TopcoatMIL-PRF-85285 Type II (White and Colors)

Test	Component A		Component B		Mixed	
	Min.	Max.	Min.	Max.	Min.	Max.

NOTES:
(1) Modify paragraph 3.6.4 Viscosity and Pot Life, of MIL-PRF-85285 as follows:

The viscosity of the admixed coating, when tested in accordance with ASTM D1200 through a No. 4 Ford cup, shall be as follows:

Time from mix (minimum)	Maximum time through a No. 4 Ford Cup
Initially	30 seconds
2 hours	60 seconds
4 hours	No gel

(2) Modify paragraph 3.7.1 Drying Time, of MIL-PRF-85285.
When applied by spray techniques and when tested in accordance with ASTM D1640, the coating shall be set-to-touch within four hours and dry-hard within eight hours (see 4.6 and table I).

GENERAL NOTES:
Test methods as specified in MIL-PRF-85285, except those marked with "*".
Where "Conform" is indicated, refer to specific requirements of MIL-PRF-85285.

-- End of Section --

SECTION 10 44 16

FIRE EXTINGUISHERS
05/12

PART 1 GENERAL

1.1 REFERENCES

The publications listed below form a part of this specification to the extent referenced. The publications are referred to within the text by the basic designation only.

INTERNATIONAL CODE COUNCIL (ICC)

ICC IFC	(2012) International Fire Code

NATIONAL FIRE PROTECTION ASSOCIATION (NFPA)

NFPA 1	(2012; TIA 11-1) Fire Code
NFPA 10	(2013) Standard for Portable Fire Extinguishers
NFPA 101	(2012; Amendment 1 2012) Life Safety Code
NFPA 385	(2012) Standard for Tank Vehicles for Flammable and Combustible Liquids

U.S. NATIONAL ARCHIVES AND RECORDS ADMINISTRATION (NARA)

29 CFR 1910.106	Flammable and Combustible Liquids
29 CFR 1910.157	(2003) Portable Fire Extinguishers

1.2 SUBMITTALS

Government approval is required for submittals with a "G" designation; submittals not having a "G" designation are for Contractor Quality Control approval. Submit the following in accordance with Section 01 33 00 SUBMITTAL PROCEDURES:

SD-01 Preconstruction Submittals

Manufacturer's Data

SD-02 Shop Drawings

Cart Mounted Fire Extinguishers

SD-03 Product Data

Cart Mounted Fire Extinguishers

SD-07 Certificates

Cart Mounted Fire Extinguishers

Manufacturer's Warranty with Inspection Tag

1.3 DELIVERY, HANDLING, AND STORAGE

Protect materials from weather, soil, and damage during delivery, storage, and construction.

Deliver materials in their original packages, containers, or bundles bearing the brand name and the name and type of the material.

1.4 WARRANTY

Guarantee that Cart Mounted Fire Extinguishers are free of defects in materials, fabrication, finish, and installation and that they will remain so for a period of not less than 10 years after completion.

PART 2 PRODUCTS

Submit fabrication drawings consisting of fabrication and assembly details performed in the factory and product data for the following items: Cart Mounted Fire Extinguishers.

2.1 TYPES

Submit certificates that show Fire Extinguishers comply with local codes and regulations.

Provide Cart Mounted Fire Extinguishers conforming to NFPA 10. Provide quantity and placement in compliance with the applicable sections of ICC IFC, Section 1414 and ICC IFC, Section 906, NFPA 1, NFPA 101, NFPA 385, 29 CFR 1910.106 and 29 CFR 1910.157.

Provide stored-pressure type fire extinguishers.

Provide foam type or dry chemical type fire extinguishers suitable for Class B fires.

Submit Manufacturer's Data for each type of Fire Extinguisher required, detailing all related Cabinet, Wall Mounting and Accessories information, complete with Manufacturer's Warranty with Inspection Tag.

2.2 MATERIAL

Provide enameled steel extinguisher shell.

2.3 SIZE

The size and capacity of the cart mounted extinguisher shall be selected for an Extra Hazard Class B fire occurrence per the requirements of NFPA 10. A minimum of two 125 lb extinguishers are required for the truck fillstand facility.

PART 3 EXECUTION

3.1 INSTALLATION

Verify exact locations prior to installation to meet the travel distance requirements of NFPA 10.

Comply with the manufacturer's recommendations for all installations.

Provide extinguishers which are fully charged and ready for operation upon installation. Provide extinguishers complete with Manufacturer's Warranty with Inspection Tag attached.

3.2 ACCEPTANCE PROVISIONS

3.2.1 Repairing

Remove and replace damaged and unacceptable portions of completed work with new work at no additional cost to the Government.

Submit Replacement Parts list indicating specified items replacement part, replacement cost, and name, address and contact for replacement parts distributor.

3.2.2 Cleaning

Clean all surfaces of the work, and adjacent surfaces which are soiled as a result of the work. Remove from the site all construction equipment, tools, surplus materials and rubbish resulting from the work.

-- End of Section --

SECTION 13 34 23

PREASSEMBLED ENCLOSURE
11/11

PART 1 GENERAL

1.1 REFERENCES

The publications listed below form a part of this specification to the extent referenced. The publications are referred to within the text by the basic designation only.

AMERICAN ARCHITECTURAL MANUFACTURERS ASSOCIATION (AAMA)

AAMA/WDMA/CSA 101/I.S.2/A440	(2011) Standard/Specification for Windows, Doors, and Skylights

AMERICAN INSTITUTE OF STEEL CONSTRUCTION (AISC)

AISC 325	(2011) Steel Construction Manual
AISC 341	(2010) Seismic Provisions for Structural Steel Buildings
AISC 360	(2010) Specification for Structural Steel Buildings

AMERICAN IRON AND STEEL INSTITUTE (AISI)

AISC/AISI 121	(2004) Standard Definitions for Use in the Design of Steel Structures
AISI SG03-3	(2002; Suppl 2001-2004; R 2008) Cold-Formed Steel Design Manual Set

AMERICAN SOCIETY OF CIVIL ENGINEERS (ASCE)

ASCE 7	(2010; Errata 2011; Supp 1 2013) Minimum Design Loads for Buildings and Other Structures

AMERICAN WELDING SOCIETY (AWS)

AWS A5.1/A5.1M	(2012) Specification for Carbon Steel Electrodes for Shielded Metal Arc Welding
AWS D1.1/D1.1M	(2010; Errata 2011) Structural Welding Code - Steel
AWS D1.3/D1.3M	(2008; Errata 2008) Structural Welding Code - Sheet Steel

ASTM INTERNATIONAL (ASTM)

ASTM A123/A123M	(2013) Standard Specification for Zinc (Hot-Dip Galvanized) Coatings on Iron and Steel Products

ASTM A153/A153M	(2009) Standard Specification for Zinc Coating (Hot-Dip) on Iron and Steel Hardware
ASTM A36/A36M	(2012) Standard Specification for Carbon Structural Steel
ASTM A500/A500M	(2013) Standard Specification for Cold-Formed Welded and Seamless Carbon Steel Structural Tubing in Rounds and Shapes
ASTM A513/A513M	(2012) Standard Specification for Electric-Resistance-Welded Carbon and Alloy Steel Mechanical Tubing
ASTM A653/A653M	(2013) Standard Specification for Steel Sheet, Zinc-Coated (Galvanized) or Zinc-Iron Alloy-Coated (Galvannealed) by the Hot-Dip Process
ASTM A666	(2010) Standard Specification for Annealed or Cold-Worked Austenitic Stainless Steel Sheet, Strip, Plate and Flat Bar
ASTM A786/A786M	(2005; R 2009) Standard Specification for Hot-Rolled Carbon, Low-Alloy, High-Strength Low-Alloy, and Alloy Steel Floor Plates
ASTM B117	(2011) Standard Practice for Operating Salt Spray (Fog) Apparatus
ASTM B209	(2010) Standard Specification for Aluminum and Aluminum-Alloy Sheet and Plate
ASTM B221	(2013) Standard Specification for Aluminum and Aluminum-Alloy Extruded Bars, Rods, Wire, Profiles, and Tubes
ASTM B632/B632M	(2008) Standard Specification for Aluminum-Alloy Rolled Tread Plate
ASTM C1036	(2010; E 2012) Standard Specification for Flat Glass
ASTM C1048	(2012; E 2012) Standard Specification for Heat-Treated Flat Glass - Kind HS, Kind FT Coated and Uncoated Glass
ASTM C1363	(2011) Standard Test Method for Thermal Performance of Building Materials and Envelope Assemblies by Means of a Hot Box Apparatus
ASTM C518	(2010) Steady-State Thermal Transmission Properties by Means of the Heat Flow Meter Apparatus

ASTM D1308	(2013) Effect of Household Chemicals on Clear and Pigmented Organic Finishes
ASTM D2244	(2011) Calculation of Color Tolerances and Color Differences from Instrumentally Measured Color Coordinates
ASTM D2247	(2011) Testing Water Resistance of Coatings in 100% Relative Humidity
ASTM D2794	(1993; R 2010) Resistance of Organic Coatings to the Effects of Rapid Deformation (Impact)
ASTM D3363	(2005; E 2011; R 2011; E 2012) Film Hardness by Pencil Test
ASTM D4214	(2007) Standard Test Method for Evaluating the Degree of Chalking of Exterior Paint Films
ASTM D522/D522M	(2014) Mandrel Bend Test of Attached Organic Coatings
ASTM D523	(2014) Standard Test Method for Specular Gloss
ASTM D714	(2002; R 2009) Evaluating Degree of Blistering of Paints
ASTM D822	(2001; R 2006) Filtered Open-Flame Carbon-Arc Exposures of Paint and Related Coatings
ASTM D968	(2005; R 2010) Abrasion Resistance of Organic Coatings by Falling Abrasive
ASTM DEFONLINE	(2008) ASTM Online Dictionary of Engineering Science and Technology
ASTM E1592	(2005; R 2012) Structural Performance of Sheet Metal Roof and Siding Systems by Uniform Static Air Pressure Difference
ASTM E1646	(1995; R 2011) Standard Test Method for Water Penetration of Exterior Metal Roof Panel Systems by Uniform Air Pressure Difference
ASTM E331	(2000; R 2009) Water Penetration of Exterior Windows, Skylights, Doors, and Curtain Walls by Uniform Static Air Pressure Difference
ASTM E774	(1997) Classification of the Durability of Sealed Insulating Glass Units
ASTM E84	(2013a) Standard Test Method for Surface

	Burning Characteristics of Building Materials
ASTM F2329	(2011) Zinc Coating, Hot-Dip, Requirements for Application to Carbon and Alloy Steel Bolts, Screws, Washers, Nuts, and Special Threaded Fasteners
ASTM G152	(2013) Operating Open Flame Carbon Arc Light Apparatus for Exposure of Nonmetallic Materials
ASTM G153	(2013) Operating Enclosed Carbon Arc Light Apparatus for Exposure of Nonmetallic Materials

METAL BUILDING MANUFACTURERS ASSOCIATION (MBMA)

MBMA MBSM	(2002) Metal Building Systems Manual

NATIONAL ASSOCIATION OF ARCHITECTURAL METAL MANUFACTURERS (NAAMM)

NAAMM AMP 500	(2006) Metal Finishes Manual

SHEET METAL AND AIR CONDITIONING CONTRACTORS' NATIONAL ASSOCIATION (SMACNA)

SMACNA 1793	(2012) Architectural Sheet Metal Manual, 7th Edition

STEEL WINDOW INSTITUTE (SWI)

SWI AGSW	(2002) Architect's Guide to Steel Windows

1.2 GENERAL REQUIREMENTS

1.2.1 Structural Performance

Enclosure components, including structural base and anchoring, shall be designed for load conditions as shown on the structural drawings.

1.2.1.1 Engineering

Design metal building systems conforming to procedures described in MBMA MBSM.

1.2.1.2 Design Loads

Conform to the requirements of MBMA MBSM, ASCE 7, and the building code applicable to the project geographical location.

1.2.1.3 Base and Floor Loads

Base and floor system shall be designed to withstand all dead and live loads as applicable, or, a minimum of 250 lb/sf over the entire floor area, while supported at indicated minimum support locations only.

1.2.1.4 Live Loads

Include all vertical loads induced by the building occupancy indicated on the drawings, as well as loads induced by maintenance workers, materials and equipment for roof live loads.

1.2.1.5 Roof Snow Loads

Include vertical loads induced by the ground snow load at the project site of 10. Allow for unbalanced and drift loads.

1.2.1.6 Wind Loads

Include horizontal loads induced by a basic wind speed Project site of 124 mph.

1.2.1.7 Collateral Loads

Include additional dead loads other than the weight of metal building system for permanent items such as sprinklers, mechanical systems, electrical systems, and ceilings.

1.2.1.8 Load Combinations

Design metal building systems to withstand the most critical effects of load factors and load combinations as required by MBMA MBSM, ASCE 7, and the building code applicable to the project location.

1.2.1.9 Deflection Limits

Maximum deflection of all base, wall, and roof members shall not exceed L/240 with all applicable dead and live loads applied.

1.2.1.10 Drift Limits

Maximum lateral deflection of frames shall not exceed H/240.

1.2.2 Seismic Performance

Design and engineer enclosure system capable of withstanding the effects of earthquake motions determined according to ASCE 7, AISC 341, and the applicable portions of the building code in the geographic area where the construction will take place.

1.2.3 Thermal Movements

Provide metal panel systems that allow for thermal movements resulting from the following maximum change (range) in ambient and surface temperatures by preventing buckling, opening of joints, overstressing of components, failure of joint sealants, failure of connections, and other detrimental effects. Base engineering calculation on surface temperatures of materials due to both solar heat gain and nighttime-sky heat loss as follows:

Temperature Change (Range); 120 F, ambient; 180 F, material surfaces.

1.2.4 Thermal Performance

Provide insulated metal panel assemblies with the following maximum U-factors and minimum R-values for opaque elements when tested according to

ASTM C1363 or ASTM C518.

1.2.4.1 Metal Roof Panel Assemblies

a. U-Factor: U-0.035
b. R-Value: R-19.0 + R-11.0 Liner System

1.2.4.2 Metal Wall Panel Assemblies

a. U-Factor: U-0.052
b. R-Value: R-13.0 + R-13.0 continuous insulation

1.2.5 Air Infiltration

Air leakage through metal roof and wall assembly must not exceed 0.06 cfm/sq.ft.

1.2.6 Water Penetration for Metal Roof Panels

No water penetration when tested according to ASTM E1646 at test-pressure difference of 2.86 lbf/sq.ft.

1.2.7 Water Penetration for Metal Wall Panels

No water penetration when tested according to ASTM E331 at a minimum differential pressure of 20 percent of inward-acting, wind-load design pressure of not less than 6.24 lbf/sq.ft. and not more than 12 lbf/sq. ft.

1.2.8 Wind-Uplift Resistance

Provide metal roof panel assemblies that comply with the building code in the geographic area where the construction will take place.

1.3 SYSTEM DESCRIPTION

General: The work shall include the furnishing, delivery, and installation of a pre-assembled, pre-engineered metal enclosure. Provide a complete, integrated set of enclosure manufacturer's standard mutually dependent components and assemblies that form a metal enclosure system capable of withstanding structural and other loads, thermally induced movement, and exposure to weather without failure or infiltration of water into enclosure interior. Include framing, metal roof panels, metal wall panels, and accessories complying with requirements indicated.

Provide metal enclosure system of size and with spacing, slopes, and spans indicated.

The metal enclosure is to be pre-assembled and delivered on-site as one complete assembly. The enclosure and all components mounted thereon shall be designed for and anchored sufficiently for transportation to the jobsite. Each shipping piece shall be designed for lifting by lugs located along the base perimeter members. Structural grid base and floor system shall be designed for applicable floor loading, allowing the enclosure to be lifted and transported with any interior equipment installed.

The pre-assembled enclosure is to be environmentally controlled.

1.4 SUBMITTALS

Government approval is required for submittals with a "G" designation; submittals not having a "G" designation are for Contractor Quality Control approval. Submit the following in accordance with Section 01 33 00 SUBMITTAL PROCEDURES:

SD-01 Preconstruction Submittals

Manufacturer's Qualifications; G

SD-02 Shop Drawings

Detail Drawings; G

SD-04 Samples

Manufacturer's color charts and chips, 4 by 4 inches; G

SD-05 Design Data

Manufacturer's descriptive and technical literature; G

Manufacturer's building design analysis; G

SD-08 Manufacturer's Instructions

Shipping, handling, and storage; G

SD-11 Closeout Submittals

Manufacturer's Warranty; G

Contractor's Warranty for Installation; G

1.5 QUALITY ASSURANCE

Prior to fabrication of metal enclosure, contractor to submit detail drawings, manufacturer's descriptive and technical literature, and building design analysis for approval.

Enclosure Manufacturer to have a Quality Control program that follows enclosure through to completion and is passed onto Owner with all instruction manuals and final drawings.

1.5.1 Manufacturer's Qualifications

Enclosure manufacturer must have a minimum of five (5) years of experience as a qualified manufacturer of pre-assembled enclosures.

Provide engineering services by an authorized currently licensed engineer in the geographical area where construction will take place, having a minimum of four years of experience as an engineer knowledgeable in building design analysis, protocols and procedures for the "Metal Building Systems Manual" (MBMA MBSM); ASCE 7, the building code in the geographic area where the construction will take place and ASTM E1592.

Provide certified engineering calculations using the products submitted for:

a. Roof and Wall Wind Loads with basic wind speed, exposure category, co-efficient, importance factor, designate type of facility, negative pressures for each zone, methods and requirements of attachment.

b. Roof Dead and Live Loads

c. Collateral Loads

d. Foundation Loads (Reactions)

e. Roof Snow Load

f. Seismic Loads

1.5.2 Single Source

Obtain primary and secondary components and structural framing members, each type of metal roof, wall and liner panel assemblies, clips, closures and other accessories from the standard products of the single source from a single manufacturer to operate as a complete system for the intended use.

1.5.3 Welding

Qualify procedures and personnel according to AWS A5.1/A5.1M, AWS D1.1/D1.1M, and AWS D1.3/D1.3M.

1.5.4 Structural Steel

Comply with AISC 325, AISC 341 for seismic impacted designs, AISC 360, for design requirements and allowable stresses.

1.5.5 Cold-Formed Steel

Comply with AISC/AISI 121 and AISI SG03-3 for design requirements and allowable stresses.

1.5.6 Surface-Burning Characteristics

Provide metal panels having insulation material with the following surface-burning characteristics as determined by testing identical products according to ASTM E84 by a qualified testing agency.

a. Flame-Spread Index: 25 or less.
b. Smoke-Developed Index: 450 or less.

1.5.7 Fabrication

Fabricate and finish metal panels and accessories by manufacturer's standard procedures and processes and as necessary to fulfill indicated performance requirements. Comply with indicated profiles with dimensional and structural requirements.

Provide metal panel profile, including major ribs and intermediate stiffening ribs, if any, for full length of panel.

Fabricate metal panel side laps with factory-installed captive gaskets or separator strips that provide a tight seal and prevent metal-to-metal contact, in a manner that will seal weather-tight and minimize noise from movements within panel assembly.

Sheet Metal Accessories: Fabricate flashing and trim to comply with recommendations in SMACNA 1793 that apply to the design, dimensions, metal, and other characteristics of item indicated:

a. Form exposed sheet metal accessories that are without excessive oil canning, buckling, and tool marks and that are true to line and levels indicated, with exposed edges folded back to form hems.

b. End Seams: Fabricate nonmoving seams with flat-lock seams. Form seams and seal with epoxy seam sealer. Rivet joints for additional strength.

c. Sealed Joints: Form non-expansion but movable joints in metal to accommodate elastomeric sealant to comply with SMACNA standards.

d. Conceal fasteners and expansion provisions where possible. Exposed fasteners are not allowed on faces of accessories exposed to view.

e. Fabricate cleats and attachment devices of size and metal thickness recommended by SMACNA or by metal building system manufacturer for application, but not less than thickness of metal being secured.

1.5.8 Finishes

Comply with NAAMM AMP 500 for recommendations for applying and designating finishes.

Appearance of Finished Work: Noticeable variations in same piece are not acceptable. Variations in appearance of adjoining components are acceptable if they are within the range of approved Samples and are assembled or installed to minimize contrast.

1.6 SHIPPING, HANDLING AND STORAGE

Package and deliver complete pre-assembled enclosure and associated equipment to jobsite so as not to be damaged or deformed and protected during transportation and handling.

1.7 COORDINATION

Coordinate installation of anchorages for enclosure. Furnish setting drawings, templates, and directions for installing anchorages, including sleeves, concrete inserts, anchor bolts, and items with integral anchors that are to be embedded in concrete or masonry. Deliver such items to Project site in time for installation. Concrete, reinforcement, and formwork requirements are specified in Section 03 30 00 CAST-IN-PLACE CONCRETE.

Coordinate installation of HVAC system, equipment supports, piping and supports and accessories.

Coordinate installation of electrical equipment, including conduit floor penetrations.

1.8 WARRANTY

1.8.1 Enclosure Warranty

Furnish manufacturer's no-dollar-limit warranty for the enclosure. The

warranty period is to be no less than 10 years from the date of acceptance of the work and be issued directly to the Government. The warranty must provide that if within the warranty period, the enclosure shows evidence of deterioration resulting from defective materials and/or workmanship, correcting of any defects is the responsibility of the enclosure manufacturer. Repairs that become necessary because of defective materials and workmanship while enclosure is under warranty are to be performed within 32 hours after notification, unless additional time is approved by the Contracting Officer. All roof repairs shall be performed within 24 hours after notification. Failure to perform repairs within timeframe indicated will constitute grounds for having emergency repairs performed by others and will not void the warranty.

1.8.2 Roof and Wall Panel Finish Warranty

Furnish manufacturer's no-dollar-limit warranty for the metal panel system. The warranty period is to be no less than 10 years from the date of acceptance of the work and be issued directly to the Government.

The warranty is to provide that if within the warranty period the metal panel system shows evidence of checking, delaminating cracking, peeling, chalk in excess of a numerical rating of eight, as determined by ASTM D4214 test procedures; or change colors in excess of five CIE or Hunter units in accordance with ASTM D2244 or excess weathering due to deterioration of the panel system resulting from defective materials and finish or correction of the defective workmanship is to be the responsibility of the metal enclosure manufacturer.

Liability under this warranty is exclusively limited to replacing the defective coated materials.

Repairs that become necessary because of defective materials and workmanship while roof and wall panel system is under warranty are to be performed within 32 hours after notification, unless additional time is approved by the Contracting Officer. Failure to perform repairs within 32 hours of notification will constitute grounds for having emergency repairs performed by others and not void the warranty.

PART 2 PRODUCTS

2.1 MATERIALS

2.1.1 Aluminum

Alloy and temper recommended by aluminum producer and manufacturer for type of use and finish indicated, and as follows:

a. Sheet: ASTM B209 (ASTM B209M).

b. Extruded Shapes: ASTM B221 (ASTM B221M).

c. Rolled Tread Plate: ASTM B632/B632M, Alloy 6061-T4 or Alloy 6061-T6.

2.1.2 Zinc-Coated (Galvanized) Steel Sheet

ASTM A653/A653M, commercial quality, G90 (Z275) coating designation; mill phosphatized.

2.1.3 Galvanized, Rolled Steel Tread Plate

ASTM A786/A786M, rolled from steel plate complying with ASTM A572/A572M, Grade 55 (380); hot-dip galvanized according to ASTM A123/A123M.

2.1.4 Steel Structural Tubing

ASTM A500/A500M, Grade B.

2.1.5 Steel Plates, Shapes, and Bars

ASTM A36/A36M

2.1.6 Steel Mechanical Tubing

ASTM A513/A513M, welded steel mechanical tubing.

2.1.7 Zinc-Coated (Galvanized) Steel

Hot-dip galvanized according to ASTM A123/A123M.

2.1.8 Stainless-Steel Sheet

ASTM A666, Type 304.

2.1.9 Clear Float Glass

ASTM C1036, Type I, Class 1, Quality q3.

2.1.10 Clear Tempered Float Glass

ASTM C1048, Kind FT, Condition A, Type I, Class 1, and Quality q3.

2.1.11 Insulating Glass

Units complying with ASTM E774 for Class CBA and consisting of two lites of 2.5-mm-thick clear float glass and dehydrated air space, with a total overall unit thickness of 7/16 inch (11 mm) and with manufacturer's standard dual seal.

2.1.12 Anchorages

Anchor bolts; hot-dip galvanized according to ASTM A153/A153M or ASTM F2329.

2.2 INSULATED STRUCTURAL STEEL FLOOR SYSTEM

Floor system shall have a hot rolled welded steel framework, with interior hot rolled steel channels, I-beams, or tube supports to meet required loads, with maximum deflection of L/240, and cold formed joists sized and spaced to meet design loads. Steel floor to be a welded 1/4" steel plate top surface with a painted, slip-resistant finish. Bottom of floor to have a rodent and moisture barrier of recessed 26 gauge sheet galvanized steel. Floor system shall be designed to be anchored to and supported by a concrete slab as shown on the plans. Concrete slab to be by others with design assistance supplied by enclosure manufacturer.

Floor insulation system to be comprised of fiberglass batt or blown cellulose insulation between floor supports. Insulation system to provide R-30 insulation value.

Floor framework and floor deck plates to be fully cleaned, primed and painted with a self-priming, VOC compliant (EPA method 24), catalyzed coating system designed to provide an extremely durable finish, suitable for heavy industrial, severe coastal, chemical, or off shore environments with superior corrosion protection and resistance to fading. Paint system to have a minimum Dry Film Thickness, per coat of 5 - 7 mils. Color to be Navy Gray.

Floor system weld standards shall as a minimum meet AWS recommended practices.

Heavy duty steel lift plates to be supplied and mounted to the base as needed for lifting the enclosure.

2.3 FRAMING

The enclosure frame shall consist of the following:

A complete, internal, self-supporting, structural steel frame. The enclosure's stand-alone framework shall include 8 to 16 gauge, cold-formed, galvanized steel structural members. Enclosure framework to have a flush-wall, vertical and horizontal framing format with either steel tube framing or a system of girts, purlins, and full trusses. The wall framing members shall be of galvanized steel.

2.4 ROOF

Roof slope shall be as indicated on drawings. Roof covering to be mechanically-seamed, 24 gauge, Standing-Seam Roofing, with a minimum seam height of 2 inches. Standing seam roof panels shall be of Galvalume steel and shall have no visible fasteners on main run. Roof to include a matching fascia, gutter and downspout.

2.5 EXTERIOR WALLS

The exterior walls shall be 18 gauge ribbed Galvalume steel panels with a baked-on PVDF resin-based finish in manufacturer's standard colors. Exterior siding panels to be overlapped and installed with appropriate self-tapping fasteners with integral gaskets, and shall be removable without any disturbance to interior panels. Butted seams are not allowed. All openings in walls are to be structurally framed, sleeved, trimmed, and provided with external drip caps. Repair or replacement of exterior panels must be able to be done entirely from outside.

2.6 INTERIOR LINER PANEL

The enclosure's interior walls and ceiling shall be lined with flush-fit 22 gauge, roll-formed liner panels, with concealed fasteners and G-90 galvanized substrate. The enclosure interior shall feature a complete matching trim system including base, jamb, header, and ceiling trim.

2.7 INSULATION

Insulation type and thickness based on manufacturer's recommendation to meet thermal performance requirements specified.

2.8 PANEL MATERIALS

2.8.1 Finish

All panels are to receive a factory-applied polyvinylidene fluoride finish consisting of a baked-on top-coat with a manufacturer's recommended prime coat conforming to the following:

a. Metal Preparation: All metal is to have the surfaces carefully prepared for painting on a continuous process coil coating line by alkali cleaning, hot water rinsing, application of chemical conversion coating, cold water rinsing, sealing with acid rinse, and thorough drying.

b. Prime Coating: A base coat of epoxy paint, specifically formulated to interact with the top-coat, is to be applied to the prepared surfaces by roll coating to a dry film thickness of 0.20 plus 0.05 mils. This prime coat must be oven cured prior to application of finish coat.

c. Exterior Finish Coating: Apply the finish coating over the primer by roll coating to dry film thickness of 0.80 plus 5 mils (3.80 plus 0.50 mils for Vinyl Plastisol) for a total dry film thickness of 1.00 plus 0.10 mils (4.00 plus 0.10 mils for Vinyl Plastisol). This finish coat must be oven-cured.

d. Interior Finish Coating: Apply a wash-coat on the reverse side over the primer by roll coating to a dry film thickness of 0.30 plus 0.05 mils for a total dry film thickness of 0.50 plus 0.10 mils. The wash-coat must be oven-cured.

e. Color: The exterior finish chosen from the manufacturer's color charts and chips with the following minimum solar reflectance values:

   Roof SRI: 78
   Wall SRI: 29

f. Physical Properties: Coating must conform to the industry and manufacturer's standard performance criteria as listed by the following certified test reports:

   Chalking: ASTM DEFONLINE
   Color Change and Conformity: ASTM D2244
   Weatherometer: ASTM G152, ASTM G153 and ASTM D822
   Humidity: ASTM D2247 and ASTM D714
   Salt Spray: ASTM B117
   Chemical Pollution: ASTM D1308
   Gloss at 60 degrees: ASTM D523
   Pencil Hardness: ASTM D3363
   Reverse Impact: ASTM D2794
   Flexibility: ASTM D522/D522M
   Abrasion: ASTM D968
   Flame Spread: ASTM E84

2.9 FASTENERS

2.9.1 General

Type, material, corrosion resistance, size and sufficient length to penetrate the supporting member a minimum of 1 inch with other properties

required to fasten miscellaneous metal framing members to substrates in accordance with the metal panel manufacturer's and ASCE 7 requirements.

2.10 FRAMES AND MATERIALS FOR OPENINGS

2.10.1 Doors

a. Doors to be constructed of no less than 18-gauge steel faced leafs with stiffeners and 16 gauge door frames. Doors and frames to be hot-dipped galvanized to ASTM designations A924 and A653, then factory primed and painted with epoxy enamel to match the enclosure.

b. Doors shall be insulated, double-wall construction, with maximum U-value of U-0.60.

c. Door to have brushed aluminum panic bar with cylinder lock and thumblatch, brushed aluminum automatic closure with built-in hold open device, prime coat hinges, threshold built into the door frame, neoprene gasket, and drip shields/water flashing.

d. Provide a "DANGER, HIGH VOLTAGE, KEEP OUT" sign at the electrical equipment room door only.

e. Provide a 2' x 2' factory-glazed window at the operator station door only.

f. Personnel doors shall be 36" x 84".

2.10.2 Windows

Aluminum Window Assemblies conforming to AAMA/WDMA/CSA 101/I.S.2/A440 SWI AGSW.

a. Provide enclosure with windows, size and location as indicated on drawings. Windows shall be extruded-aluminum horizontal sliding frames glazed with tinted insulating glass.

   1. Insulating Glass: Units complying with ASTM E774 for Class CBA and consisting of two lites of 2.5-mm-thick clear float glass and dehydrated air space, with a total overall unit thickness of 7/16 inch (11 mm) and with manufacturer's standard dual seal. Maximum U-value of U-0.45.

   2. Provide insect screens for each operable window.

   3. Corner Shape: Square

2.11 ACCESSORIES

2.11.1 General

All accessories to be compatible with the metal panels; sheet metal flashing, trim, metal closure strips, caps and similar metal accessories must not be less than the minimum thickness specified for the metal panels. Exposed metal accessories/finishes to match the panels furnished, except as otherwise indicated. Molded foam rib and other closure strips to be non-absorbent closed-cell or solid-cell synthetic rubber or pre-molded neoprene to match configuration of the panels.

2.11.2 Fire Extinguishers

Wall mounted 10# Dry Chemical ABC Rated Fire Extinguishers are to be provided in a convenient location at each doorway.

2.12 HVAC

Provide enclosure spaces with individual HVAC heat pump systems. Each of the two rooms shall have high efficiency variable refrigerant flow, split system air source heat pump. Room 101 Operator Station and room 102 Electrical Room will each be approximately 1 ton capacity. A wall mounted style indoor unit shall be used with integral outdoor air connection. The outdoor heat pump condensing unit shall be matched to the indoor unit and have all necessary controls to operate as a system.

The HVAC controls shall incorporate a programmable, user adjustable, 7 day scheduler thermostat. All condensate piping shall be insulated and discharge through the exterior wall down to grade.

2.13 ELECTRICAL

2.13.1 Conduit Penetrations

Provide floor with floor cutouts where required for power and control cable entry from equipment. Provide cutouts with 12-gage galvanized coverplates. Coordinate location of conduit floor penetrations with Electrical Contractor.

2.13.2 Electrical Equipment

Major Equipment Supplied by Others is as Follows:

a. Motor Control Center (MCC-1): 90" H x 48" W x 24" D, with 100 watts of heat loss.

b. 480/277V Panelboard (PP1): 48" H x 20" W x 6" D, with 100 watts of heat loss.

c. 240/120V Panelboard (LP1): 42" H x 20" W x 6" D, with 100 watts of heat loss.

d. Lighting Contactor (LC1): 20" H x 24" W x 8" D, with 10 watts of heat loss.

e. Dry Type Transformer (T-2): 30" H x 24" W x 24" D, with 1200 watts of heat loss.

f. Tank Levels Panel: 12" H x 12" W x 6" D, with 25 watts of heat loss.

g. EFSO Panel: 12" H x 12" W x 6" D, 5 watts of heat loss.

h. Control Panel: 18" H x 12" W x 6" D, 25 watts of heat loss.

PART 3 EXECUTION

3.1 EXAMINATION

Do not begin installation until supporting foundation or enclosure pad has been properly prepared and inspected.

3.2 PREPARATION

Locate and verify utility services and structural foundation prior to installation.

Prepare foundation using the methods recommended by the manufacturer.

3.3 INSTALLATION

Install enclosure according to manufacturer's written instructions.

Set enclosure plumb and aligned.

3.4 ADJUSTING

Adjust doors, operable windows, and hardware to operate smoothly, easily, properly, and without binding. Confirm that locks engage accurately and securely without forcing or binding.

3.5 CLEAN-UP AND PROTECTION

Protect delivered units, accessories, and installed products until completion of project.

Touch-up, repair, or replace damaged products before Substantial Completion. Exposed metal surfaces to be free of dents, creases, waves, scratch marks, solder or weld marks, and damage to the finish coating. Touch-up painted surfaces with manufacturer's touch-up paint.

3.6 WARRANTY

3.6.1 MANUFACTURER'S WARRANTY

Submit all manufacturers' signed warranties to Contracting Officer prior to final commissioning and acceptance.

3.6.2 CONTRACTOR'S WARRANTY for INSTALLATION

Submit contractor's warranty for installation to the Contracting Officer prior to final commissioning and acceptance.

3.6.3 CONTRACTOR'S TEN (10) YEAR NO PENAL SUM WARRANTY

CONTRACTOR'S TEN (10) YEAR NO PENAL SUM WARRANTY
FOR
METAL BUILDING SYSTEM

FACILITY DESCRIPTION:_____

BUILDING NUMBER:_____

CORPS OF ENGINEERS CONTRACT NUMBER:_____

CONTRACTOR

CONTRACTOR:_____

ADDRESS:_____

POINT OF CONTACT:_____

TELEPHONE NUMBER:_____

OWNER

OWNER:_____
ADDRESS:_____

POINT OF CONTACT:_____

TELEPHONE NUMBER:_____

CONSTRUCTION AGENT

CONSTRUCTION AGENT:_____
ADDRESS:_____

POINT OF CONTACT:_____

TELEPHONE NUMBER:_____

CONTRACTOR'S TEN (10) YEAR NO PENAL SUM WARRANTY
FOR
METAL BUILDING SYSTEM
(continued)

THE METAL BUILDING SYSTEM INSTALLED ON THE ABOVE NAMED BUILDING IS WARRANTED BY _____ FOR A PERIOD OF TEN 10 YEARS AGAINST WORKMANSHIP AND MATERIAL DEFICIENCIES, WIND DAMAGE AND STRUCTURAL FAILURE WITHIN PROJECT SPECIFIED DESIGN LOADS, AND LEAKAGE. THE METAL BUILDING SYSTEM COVERED UNDER THIS WARRANTY INCLUDES, BUT IS NOT LIMITED TO, THE FOLLOWING:

FRAMING AND STRUCTURAL MEMBERS, ROOFING AND SIDING PANELS AND SEAMS, INTERIOR OR EXTERIOR GUTTERS AND DOWNSPOUTS, ACCESSORIES, TRIM, FLASHINGS AND MISCELLANEOUS BUILDING CLOSURE ITEMS SUCH AS DOORS AND WINDOWS (WHEN FURNISHED BY THE MANUFACTURER), CONNECTORS, COMPONENTS, AND FASTENERS, AND OTHER SYSTEM COMPONENTS AND ASSEMBLIES INSTALLED TO PROVIDE A WEATHERTIGHT SYSTEM; AND ITEMS SPECIFIED IN OTHER SECTIONS OF THESE SPECIFICATIONS THAT BECOME PART OF THE METAL BUILDING SYSTEM.

ALL MATERIAL AND WORKMANSHIP DEFICIENCIES, SYSTEM DETERIORATION CAUSED BY EXPOSURE TO THE ELEMENTS AND/OR INADEQUATE RESISTANCE TO SPECIFIED SERVICE DESIGN LOADS, WATER LEAKS AND WIND UPLIFT DAMAGE MUST BE REPAIRED AS APPROVED BY THE CONTRACTING OFFICER.

ALL MATERIAL DEFICIENCIES, WIND DAMAGE, STRUCTURAL FAILURE AND LEAKAGE ASSOCIATED WITH THE METAL BUILDING SYSTEM COVERED UNDER THIS WARRANTY MUST BE REPAIRED AS APPROVED BY THE CONTRACTING OFFICER.

THIS WARRANTY COVERS THE ENTIRE COST OF REPAIR OR REPLACEMENT, INCLUDING ALL MATERIAL, LABOR, AND RELATED MARKUPS. THE ABOVE REFERENCED WARRANTY COMMENCED ON THE DATE OF FINAL ACCEPTANCE ON _____ AND WILL REMAIN IN EFFECT FOR STATED DURATION FROM THIS DATE.

SIGNED, DATED, AND NOTARIZED (BY COMPANY PRESIDENT)

_____

(Company President) (Date)

CONTRACTOR'S TEN (10) YEAR NO PENAL SUM WARRANTY
FOR
METAL BUILDING SYSTEM
(continued)

THE CONTRACTOR HEREBY SUPPLEMENTS THIS WARRANTY WITH WRITTEN WARRANTIES FROM THE MANUFACTURER AND/OR INSTALLER OF THE METAL BUILDING SYSTEM, WHICH IS SUBMITTED ALONG WITH THE CONTRACTOR'S WARRANTY. HOWEVER, THE CONTRACTOR IS ULTIMATELY RESPONSIBLE FOR THIS WARRANTY AS OUTLINED IN THE SPECIFICATIONS AND AS INDICATED IN THIS WARRANTY.

EXCLUSIONS FROM COVERAGE

1. NATURAL DISASTERS, ACTS OF GOD (LIGHTNING, FIRE, EXPLOSIONS, SUSTAINED WIND FORCES IN EXCESS OF THE DESIGN CRITERIA, EARTHQUAKES, AND HAIL).

2. ACTS OF NEGLIGENCE OR ABUSE OR MISUSE BY GOVERNMENT OR OTHER PERSONNEL,INCLUDING ACCIDENTS, VANDALISM, CIVIL DISOBEDIENCE, WAR, OR DAMAGE CAUSED BY FALLING OBJECTS.

3. DAMAGE BY STRUCTURAL FAILURE, SETTLEMENT, MOVEMENT, DISTORTION, WARPAGE, OR DISPLACEMENT OF THE BUILDING STRUCTURE OR ALTERATIONS MADE TO THE BUILDING.

4. CORROSION CAUSED BY EXPOSURE TO CORROSIVE CHEMICALS, ASH OR FUMES GENERATED OR RELEASED INSIDE OR OUTSIDE THE BUILDING FROM CHEMICAL PLANTS, FOUNDRIES, PLATING WORKS, KILNS, FERTILIZER FACTORIES, PAPER PLANTS, AND THE LIKE.

5. FAILURE OF ANY PART OF THE BUILDING SYSTEM DUE TO ACTIONS BY THE OWNER WHICH INHIBIT FREE DRAINAGE FROM THE ROOF, GUTTERS AND DOWNSPOUTS; OR CONDITIONS WHICH CREATE PONDING WATER ON THE ROOF OR AGAINST THE BUILDING SIDING.

6. THIS WARRANTY APPLIES TO THE METAL BUILDING SYSTEM. IT DOES NOT INCLUDE ANY CONSEQUENTIAL DAMAGE TO THE BUILDING INTERIOR OR CONTENTS WHICH IS COVERED BY THE WARRANTY OF CONSTRUCTION CLAUSE INCLUDED IN THIS CONTRACT.

7. THIS WARRANTY CANNOT BE TRANSFERRED TO ANOTHER OWNER WITHOUT WRITTEN CONSENT OF THE CONTRACTOR AND THIS WARRANTY AND THE CONTRACT PROVISIONS TAKE PRECEDENCE OVER ANY CONFLICTS WITH STATE STATUTES. REPORTS OF LEAKS AND BUILDING SYSTEM DEFICIENCIES MUST BE RESPONDED TO WITHIN 48 HOURS OF RECEIPT OF NOTICE BY TELEPHONE OR IN WRITING FROM EITHER THE OWNER, OR CONTRACTING OFFICER. EMERGENCY REPAIRS, TO PREVENT FURTHER ROOF LEAKS, MUST BE INITIATED IMMEDIATELY; A WRITTEN PLAN MUST BE SUBMITTED FOR APPROVAL TO REPAIR OR REPLACE THIS SSSMR SYSTEM WITHIN SEVEN CALENDAR DAYS. ACTUAL WORK FOR PERMANENT REPAIRS OR REPLACEMENT MUST BE STARTED WITHIN 30 DAYS AFTER RECEIPT OF NOTICE, AND COMPLETED WITHIN A REASONABLE TIME FRAME. IF THE CONTRACTOR FAILS TO ADEQUATELY RESPOND TO THE WARRANTY PROVISIONS, AS STATED

CONTRACTOR'S TEN (10) YEAR NO PENAL SUM WARRANTY
FOR
METAL BUILDING SYSTEM
(Exclusions from Coverage Continued)

IN THE CONTRACT AND AS CONTAINED HEREIN, THE CONTRACTING OFFICER MAY HAVE THE METAL BUILDING SYSTEM REPLACED OR REPAIRED BY OTHERS AND CHARGE THE COST TO THE CONTRACTOR. IN THE EVENT THE CONTRACTOR DISPUTES THE EXISTENCE OF A WARRANTABLE DEFECT, THE CONTRACTOR MAY CHALLENGE THE OWNER'S DEMAND FOR REPAIRS AND/OR REPLACEMENT DIRECTED BY THE OWNER OR CONTRACTING OFFICER EITHER BY REQUESTING A CONTRACTING OFFICER'S DECISION, UNDER THE CONTRACT DISPUTES ACT, OR BY REQUESTING THAT AN ARBITRATOR RESOLVE THE ISSUE. THE REQUEST FOR AN ARBITRATOR MUST BE MADE WITHIN 48 HOURS OF BEING NOTIFIED OF THE DISPUTED DEFECTS. UPON BEING INVOKED THE PARTIES MUST, WITHIN 10 DAYS JOINTLY REQUEST A LIST OF FIVE (5) ARBITRATORS FROM THE FEDERAL MEDIATION AND CONCILIATION SERVICE. THE PARTIES MUST CONFER WITHIN 10 DAYS AFTER RECEIPT OF THE LIST TO SEEK AGREEMENT ON AN ARBITRATOR. IF THE PARTIES CANNOT AGREE ON AN ARBITRATOR, THE CONTRACTING OFFICER AND THE PRESIDENT OF THE CONTRACTOR'S COMPANY WILL STRIKE ONE (1) NAME FROM THE LIST ALTERNATIVELY UNTIL ONE NAME REMAINS. THE REMAINING PERSON WILL BE THE DULY SELECTED ARBITRATOR. THE COSTS OF THE ARBITRATION, INCLUDING THE ARBITRATOR'S FEE AND EXPENSES, COURT REPORTER, COURTROOM OR SITE SELECTED ETC., MUST BE BORNE EQUALLY BETWEEN THE PARTIES. EITHER PARTY DESIRING A COPY OF THE TRANSCRIPT MUST PAY FOR THE TRANSCRIPT. A HEARING WILL BE HELD AS SOON AS THE PARTIES CAN MUTUALLY AGREE. A WRITTEN ARBITRATOR'S DECISION WILL BE REQUESTED NOT LATER THAN 30 DAYS FOLLOWING THE HEARING. THE DECISION OF THE ARBITRATOR WILL NOT BE BINDING; HOWEVER, IT WILL BE ADMISSIBLE IN ANY SUBSEQUENT APPEAL UNDER THE CONTRACT DISPUTES ACT.

POST A FRAMED COPY OF THIS WARRANTY IN THE MECHANICAL ROOM OR OTHER APPROVED LOCATION DURING THE ENTIRE WARRANTY PERIOD.

-- End of Section --

SECTION 13 48 00.00 10

SEISMIC PROTECTION FOR MECHANICAL EQUIPMENT
10/07

PART 1 GENERAL

1.1 REFERENCES

The publications listed below form a part of this specification to the extent referenced. The publications are referred to within the text by the basic designation only.

AMERICAN INSTITUTE OF STEEL CONSTRUCTION (AISC)

AISC 325 (2011) Steel Construction Manual

U.S. DEPARTMENT OF DEFENSE (DOD)

UFC 3-310-04 (2012) Seismic Design for Buildings

1.2 SYSTEM DESCRIPTION

1.2.1 General Requirements

Apply the requirements for seismic protection measures described in this section to the mechanical equipment and systems listed below. Structural requirements shall be in accordance with Section 13 48 00 SEISMIC PROTECTION FOR MISCELLANEOUS EQUIPMENT.

1.2.2 Mechanical Equipment

Mechanical equipment to be seismically protected shall include the following items to the extent required on the drawings or in other sections of these specifications:

Pumps with Motors
Shop Fabricated Tanks
Valves and Fittings for Piping

1.2.3 Mechanical Systems

Install the following mechanical systems as required on the drawings and other sections of these specifications and seismically protect them in accordance with this specification:

a. Fuel Piping Outside of Buildings.

b. All Process Piping.

c. Valves and Fittings for Piping.

d. Fuel Storage Tanks.

e. Fuel Additive Storage Tanks.

f. Fuel Pumps with Motors.

Submit copies of the design calculations with the drawings. Calculations shall be approved, certified, stamped and signed by a registered Professional Engineer. Calculations shall verify the capability of structural members to which bracing is attached for carrying the load from the brace. Design the bracing in accordance with UFC 3-310-04 and additional data furnished by the Contracting Officer. Resistance to lateral forces induced by earthquakes shall be accomplished without consideration of friction resulting from gravity loads. UFC 3-310-04 uses parameters for the building, not for the equipment in the building; therefore, corresponding adjustments to the formulas shall be required. Loadings determined using UFC 3-310-04 are based on strength design; therefore, AISC 325 Specifications shall be used for the design.

1.2.4 Items Not Covered By This Section

1.2.4.1 Items Requiring No Seismic Restraints

Seismic restraints are not required for the following items:

a. Fuel piping less than 2-1/2 inches inside diameter.

1.3 EQUIPMENT REQUIREMENTS

Submit copies of the design calculations with the detail drawings. Calculations shall be stamped by a registered engineer and shall verify the capability of structural members to which bracing is attached for carrying the load from the brace.

1.3.1 Rigidly Mounted Equipment

The following specific items of equipment listed below to be furnished under this contract shall be constructed and assembled to withstand the seismic forces specified in UFC 3-310-04. Each item of rigid equipment shall be entirely located and rigidly attached on one side only of an equipment pad expansion joint. Piping, duct, electrical conduit, etc., which cross the expansion joint shall be provided with flexible joints that are capable of accommodating displacements equal to the full width of the joint in both orthogonal directions.

Fuel Pumps
Factory Fabricated Tanks

1.3.2 Nonrigid or Flexibly-Mounted Equipment

The following specific items of equipment to be furnished: shall be constructed and assembled to resist a horizontal lateral force of 0.088 times the operating weight of the equipment at the vertical center of gravity of the equipment.

1.4 SUBMITTALS

Government approval is required for submittals with a "G" designation; submittals not having a "G" designation are for Contractor Quality Control approval. Submit the following in accordance with Section 01 33 00 SUBMITTAL PROCEDURES:

SD-02 Shop Drawings

Coupling and Bracing
Equipment Requirements

SD-03 Product Data

Coupling and Bracing; G
Equipment Requirements; G

PART 2 PRODUCTS

2.1 FLEXIBLE COUPLINGS

Flexible couplings shall have same pressure and temperature ratings as adjoining pipe.

2.2 SWAY BRACING MATERIALS

Sway bracing materials (e.g. rods, plates, rope, angles, etc.) shall be as specified in Section 13 48 00 SEISMIC PROTECTION FOR MISCELLANEOUS EQUIPMENT.

PART 3 EXECUTION

3.1 COUPLING AND BRACING

a. Submit detail drawings, as specified here and throughout this specification, along with catalog cuts, templates, and erection and installation details, as appropriate, for the items listed. Submittals shall be complete in detail; shall indicate thickness, type, grade, class of metal, and dimensions; and shall show construction details, reinforcement, anchorage, and installation with relation to the building construction.

b. Coupling installation shall conform to the details shown on the drawings. Provisions of this paragraph apply to all piping within a 5 foot line around outside of building unless buried in the ground. Piping grouped for support on trapeze-type hangers shall be braced at the most frequent interval as determined by applying the requirements of this specification to each piping run on the common support.

c. Bracing components shall be sized as required for the total load carried by the common supports. Bracing rigidly attached to pipe flanges, or similar, shall not be used where it would interfere with thermal expansion of piping.

3.2 PIPE SLEEVES

Pipe sleeves through concrete slabs shall be sized as indicated on the drawings to provide clearances that will permit differential movement of piping without the piping striking the pipe sleeve.

3.3 SPREADERS

Spreaders shall be provided between adjacent piping runs to prevent contact during seismic activity whenever pipe or insulated pipe surfaces are less than 4 inches apart. Spreaders shall be applied at same interval as sway

braces at an equal distance between the sway braces. If rack type hangers are used where the pipes are restrained from contact by mounting to the rack, spreaders are not required for pipes mounted in the rack. Spreaders shall be applied to surface of bare pipe and over insulation on insulated pipes utilizing high-density inserts and pipe protection shields in accordance with the requirements of Section 23 07 00 THERMAL INSULATION FOR MECHANICAL SYSTEMS.

3.4 SWAY BRACES FOR PIPING

Sway braces shall be provided to prevent movement of the pipes under seismic loading. Braces shall be provided in both the longitudinal and transverse directions, relative to the axis of the pipe. The bracing shall not interfere with thermal expansion requirements for the pipes as described in other sections of these specifications.

3.4.1 Longitudinal Sway Bracing

Longitudinal sway bracing shall be provided at 40 foot intervals unless otherwise indicated. All runs (length of pipe between end joints) shall have one longitudinal brace minimum. Sway braces shall be constructed in accordance with the drawings. Branch lines, walls, or floors shall not be used as sway braces.

3.4.2 Vertical Runs

Run is defined as length of pipe between end joints. Vertical runs of piping shall be braced at not more than 10 foot vertical intervals. Braces for vertical runs shall be above the center of gravity of the segment being braced. All sway braces shall be constructed in accordance with the drawings. Sway braces shall attach to the structural system and shall not be connected to branch lines, walls, or floors.

3.4.3 Clamps and Hangers

Clamps or hangers on uninsulated pipes shall be applied directly to pipe.

-- End of Section --

SECTION 13 48 00

SEISMIC PROTECTION FOR MISCELLANEOUS EQUIPMENT
08/08

PART 1 GENERAL

1.1 REFERENCES

The publications listed below form a part of this specification to the extent referenced. The publications are referred to within the text by the basic designation only.

ASME INTERNATIONAL (ASME)

ASME B18.2.1	(2012; Errata 2013) Square and Hex Bolts and Screws (Inch Series)
ASME B18.2.2	(2010) Nuts for General Applications: Machine Screw Nuts, Hex, Square, Hex Flange, and Coupling Nuts (Inch Series)

ASTM INTERNATIONAL (ASTM)

ASTM A153/A153M	(2009) Standard Specification for Zinc Coating (Hot-Dip) on Iron and Steel Hardware
ASTM A307	(2012) Standard Specification for Carbon Steel Bolts and Studs, 60 000 PSI Tensile Strength
ASTM A36/A36M	(2012) Standard Specification for Carbon Structural Steel
ASTM A500/A500M	(2013) Standard Specification for Cold-Formed Welded and Seamless Carbon Steel Structural Tubing in Rounds and Shapes
ASTM A53/A53M	(2012) Standard Specification for Pipe, Steel, Black and Hot-Dipped, Zinc-Coated, Welded and Seamless
ASTM A563	(2007a) Standard Specification for Carbon and Alloy Steel Nuts
ASTM A572/A572M	(2013a) Standard Specification for High-Strength Low-Alloy Columbium-Vanadium Structural Steel
ASTM A603	(1998a; E 2009; R 2009) Standard Specification for Zinc-Coated Steel Structural Wire Rope
ASTM A653/A653M	(2013) Standard Specification for Steel Sheet, Zinc-Coated (Galvanized) or

	Zinc-Iron Alloy-Coated (Galvannealed) by the Hot-Dip Process
ASTM E488/E488M	(2010) Standard Test Methods for Strength of Anchors in Concrete and Masonry Elements

U.S. DEPARTMENT OF DEFENSE (DOD)

UFC 3-310-04	(2013) Seismic Design for Buildings

1.2 SYSTEM DESCRIPTION

1.2.1 General Requirements

Apply the requirements for seismic protection measures, described in this section, to the mechanical equipment and systems outlined in Section 13 48 00.00 10 SEISMIC PROTECTION FOR MECHANICAL EQUIPMENT, the electrical equipment and systems outlined in Section 26 05 48.00 10 SEISMIC PROTECTION FOR ELECTRICAL EQUIPMENT, and the miscellaneous equipment and systems listed below, in accordance with UFC 3-310-04 and additional data furnished by the Contracting Officer. Provide seismic protection measures in addition to any other requirements called for in other sections of these specifications. The design for seismic protection shall be based on a Seismic Use Group IV building occupancy and on site response coefficients for S_{DS} = 0.167 and S_{D1} = 0.117. Accomplish resistance to lateral forces induced by earthquakes without consideration of friction resulting from gravity loads. The basic force formulas, for Ground Motions A and B in UFC 3-310-04, use the design spectral response acceleration parameters for the performance objective of the building, not for equipment in the building; therefore, corresponding adjustments to the formulas are required.

1.2.2 Miscellaneous Equipment and Systems

The bracing for the following miscellaneous equipment and systems shall be developed by the Contractor in accordance with the requirements of this specification:

Storage cabinets
Ornamentations
Storage Racks
Signs and Billboards
Shelving
Furnishings
Partitions

1.3 SUBMITTALS

Government approval is required for submittals with a "G" designation; submittals not having a "G" designation are for Contractor Quality Control approval. Submit the following in accordance with Section 01 33 00 SUBMITTAL PROCEDURES:

SD-02 Shop Drawings

Bracing; G
Resilient Vibration Isolation Devices; G
Equipment Requirements; G

SD-03 Product Data

Bracing; G
Equipment Requirements; G

SD-06 Test Reports

Anchor Bolts

PART 2 PRODUCTS

2.1 EQUIPMENT REQUIREMENTS

Submit detail drawings along with calculations, catalog cuts, templates, and erection and installation details, as appropriate, for the items listed below. Indicate thickness, type, grade, class of metal, and dimensions; and show construction details, reinforcement, anchorage, and installation with relation to the building construction. For equipment and systems in buildings that have a performance objective higher than life-safety, the drawings shall be stamped by the registered engineer who stamps the calculations. Calculations shall be stamped, by a registered engineer, and verify the capability of structural members to which bracing is attached for carrying the load from the brace.

2.1.1 Rigidly Mounted Equipment

Rigidly mounted equipment to be furnished under this contract shall be constructed and assembled to withstand the seismic forces specified in UFC 3-310-04. For any rigid equipment which is rigidly attached on both sides of a building expansion joint, provide flexible joints for piping, electrical conduit, etc., that are capable of accommodating displacements equal to the full width of the joint in both orthogonal directions.

2.1.2 Nonrigid or Flexibly-Mounted Equipment

Nonrigid or flexibility-mounted equipment to be furnished under this contract shall be constructed and assembled to resist a horizontal lateral force of 0.75 times the operating weight of the equipment at the vertical center of gravity of the equipment.

2.2 BOLTS AND NUTS

Squarehead and hexhead bolts, and heavy hexagon nuts, ASME B18.2.1, ASME B18.2.2, or ASTM A307 for bolts and ASTM A563 for nuts. Provide bolts and nuts galvanized in accordance with ASTM A153/A153M when used underground and/or exposed to weather.

2.3 SWAY BRACING

Material used for members listed in this section, shall be structural steel conforming with the following:

a. Plates, rods, and rolled shapes, ASTM A36/A36M and ASTM A572/A572M, Grade 503. If the Contractor does the design, both ASTM A36/A36M and ASTM A572/A572M, Grade 503 will be allowed.

b. Wire rope, ASTM A603.

c. Tubes, ASTM A500/A500M, Grade B.

d. Pipes, ASTM A53/A53M, Type E or S, Grade B.

e. Light gauge angles, less than 1/4 inch thickness, ASTM A653/A653M.

PART 3 EXECUTION

3.1 BRACING

Provide bracing conforming to the arrangements shown. Secure trapeze-type hanger with not less than two 1/2 inch bolts.

3.2 BUILDING DRIFT

Sway braces for a piping run shall not be attached to two dissimilar structural elements of a building that may respond differentially during an earthquake unless a flexible joint is provided.

3.3 ANCHOR BOLTS

Submit copies of test results to verify the adequacy of the specific anchor and application, as specified.

3.3.1 Cast-In-Place

Use cast-in-place anchor bolts, conforming to ASTM A307, for floor or pad mounted equipment, except as specified below. Provide two nuts on each bolt. Anchor bolts shall have an embedded straight length equal to at least 12 times nominal diameter of the bolt. Anchor bolts that exceed the normal depth of equipment foundation piers or pads shall either extend into concrete floor or the foundation or be increased in depth to accommodate bolt lengths.

3.3.2 Expansion or Chemically Bonded Anchors

Do not use expansion or chemically bonded anchors: 1)Unless test data in accordance with ASTM E488/E488M has been provided to verify the adequacy of the specific anchor and application. 2)To resist pull-out in overhead and wall installations if the adhesive is manufactured with temperature sensitive epoxies and the location is accessible to a building fire. Install expansion and chemically bonded anchors in accordance with the manufacturer's recommendations. Adjust the allowable forces for the spacing between anchor bolts and the distance between the anchor bolt and the nearest edge, as specified by the manufacturer.

3.3.2.1 General Testing

Test in place expansion and chemically bonded anchors not more than 24 hours after installation of the anchor, conducted by an independent testing agency; testing shall be performed on random anchor bolts as described below.

3.3.2.2 Torque Wrench Testing

Perform torque wrench testing on not less than 25 percent of the total installed expansion anchors and at least 2 anchors for every piece of equipment containing more than two anchors. The test torque shall equal the minimum required installation torque as required by the bolt manufacturer. Calibrate torque wrenches at the beginning of each day the

torque tests are performed. Recalibrate torque wrenches for each bolt diameter whenever tests are run on bolts of various diameters. Apply torque between 20 and 100 percent of wrench capacity. Reach the test torque within one half turn of the nut, except for 3/8 inch sleeve anchors which shall reach their torque by one quarter turn of the nut. If any anchor fails the test, test similar anchors not previously tested until 4 consecutive anchors pass. Failed anchors shall be retightened and retested to the specified torque; if the anchor still fails the test it shall be replaced.

3.4 RESILIENT VIBRATION ISOLATION DEVICES

Where the need for these devices is determined, based on the magnitude of the design seismic forces, selection of anchor bolts for vibration isolation devices and/or snubbers for equipment base and foundations shall follow the same procedure as in paragraph ANCHOR BOLTS, except that an equipment weight equal to five times the actual equipment weight shall be used.

3.4.1 Resilient and Spring-Type Vibration Devices

Select vibration isolation devices so that the maximum movement of equipment from the static deflection point is 1/2 inch.

3.4.2 Multidirectional Seismic Snubbers

Install multidirectional seismic snubbers employing elastomeric pads on floor- or slab-mounted equipment. These snubbers shall provide 1/4 inch free vertical and horizontal movement from the static deflection point. Snubber medium shall consist of multiple pads of cotton duct and neoprene or other suitable materials arranged around a flanged steel trunnion so both horizontal and vertical forces are resisted by the snubber medium.

3.5 SWAY BRACES FOR PIPING

Provide transverse sway bracing for steel and copper pipe at intervals not to exceed those shown on the drawings. Transverse sway bracing for pipes of materials other than steel and copper shall be provided at intervals not to exceed the hanger spacing as specified in Section 22 00 00 PLUMBING, GENERAL PURPOSE. Provide bracing consisting of at least one vertical angle 2 by 2 inch by 16 gauge and one diagonal angle of the same size.

3.5.1 Longitudinal Sway Bracing

Provide longitudinal sway bracing in accordance with Section 13 48 00.00 10 SEISMIC CONTROL FOR MECHANICAL EQUIPMENT.

3.5.2 Anchor Rods, Angles, and Bars

Anchor rods, angles, and bars shall be bolted to either pipe clamps or pipe flanges at one end and cast-in-place concrete or masonry insert or clip angles bolted to the steel structure on the other end. Rods shall be solid metal or pipe as specified below. Anchor rods, angles, and bars shall not exceed lengths given in the tabulation below.

3.5.3 Maximum Length for Anchor Braces

Type	Size (in)	Maximum Length* (ft-in)
Angles	1-1/2 x 1-1/2 x 1/4	4-10
	2 x 2 x 1/4	6-6
	2-1/2 x 1-1/2 x 1/4	8-0
	3 x 2-1/2 x 1/4	8-10
	3 x 3 x 1/4	9-10
Rods	3/4	3-1
	7/8	3-8
Flat Bars	1-1/2 x 1/4	1-2
	2 x 1/4	1-2
	2 x 3/8	1-9
Pipes (40s)	1	7-0
	1-1/4	9-0
	1-1/2	10-4
	2	13-1

3.5.4 Bolts

Bolts used for attachment of anchors to pipe and structure shall be not less than 1/2 inch diameter.

3.6 EQUIPMENT SWAY BRACING

3.6.1 Suspended Equipment and Light Fixtures

Provide equipment sway bracing for items supported from overhead floor or roof structural systems, including light fixtures. Braces shall consist of angles, rods, wire rope, bars, or pipes arranged as shown and secured at both ends with not less than 1/2 inch bolts. Provide sufficient braces for equipment to resist a horizontal force as specified in UFC 3-310-04 without exceeding safe working stress of bracing components. Provide, for approval, specific force calculations in accordance with UFC 3-310-04 for the equipment in the project. Submit details of equipment bracing for acceptance. In lieu of bracing with vertical supports, these items may be supported with hangers inclined at 45 degrees directed up and radially away from equipment and oriented symmetrically in 90-degree intervals on the horizontal plane, bisecting the angles of each corner of the equipment, provided that supporting members are properly sized to support operating weight of equipment when hangers are inclined at a 45-degree

angle.

3.6.2 Floor or Pad Mounted Equipment

3.6.2.1 Shear Resistance

Bolt to the floor, floor mounted equipment. Requirements for the number and installation of bolts to resist shear forces shall be in accordance with paragraph ANCHOR BOLTS.

3.6.2.2 Overturning Resistance

Use the ratio of the overturning moment from seismic forces to the resisting moment due to gravity loads to determine if overturning forces need to be considered in the sizing of anchor bolts. Provide calculations to verify the adequacy of the anchor bolts for combined shear and overturning.

3.7 SPECIAL INSPECTION AND TESTING FOR SEISMIC-RESISTING SYSTEMS

Perform special inspections and testing for seismic-resisting systems and components in accordance with Section 01 45 35 SPECIAL INSPECTIONS.

-- End of Section --

SECTION 26 00 00.00 20

BASIC ELECTRICAL MATERIALS AND METHODS
07/06

PART 1 GENERAL

1.1 REFERENCES

The publications listed below form a part of this specification to the extent referenced. The publications are referred to in the text by the basic designation only.

ASTM INTERNATIONAL (ASTM)

ASTM D709	(2013) Laminated Thermosetting Materials

INSTITUTE OF ELECTRICAL AND ELECTRONICS ENGINEERS (IEEE)

IEEE 100	(2000; Archived) The Authoritative Dictionary of IEEE Standards Terms
IEEE C2	(2012; Errata 2012; INT 1-4 2012; INT 5-6 2013) National Electrical Safety Code
IEEE C57.12.28	(2005; INT 3 2011) Standard for Pad-Mounted Equipment - Enclosure Integrity
IEEE C57.12.29	(2005) Standard for Pad-Mounted Equipment - Enclosure Integrity for Coastal Environments

NATIONAL ELECTRICAL MANUFACTURERS ASSOCIATION (NEMA)

NEMA 250	(2008) Enclosures for Electrical Equipment (1000 Volts Maximum)

NATIONAL FIRE PROTECTION ASSOCIATION (NFPA)

NFPA 70	(2014; AMD 1 2013; Errata 2013; AMD 2 2013) National Electrical Code

1.2 RELATED REQUIREMENTS

This section applies to all sections of Division 26 and 33, ELECTRICAL and UTILITIES, of this project specification unless specified otherwise in the individual sections. This section has been incorporated into, and thus, does not apply to, and is not referenced in the following sections.

Section 26 12 19.10 THREE-PHASE PAD MOUNTED TRANSFORMERS
Section 26 20 00 INTERIOR DISTRIBUTION SYSTEM
Section 26 51 00.00 40 INTERIOR LIGHTING
Section 26 56 00 EXTERIOR LIGHTING
Section 33 71 02 UNDERGROUND ELECTRICAL DISTRIBUTION
Section 33 82 00 TELECOMMUNICATIONS OUTSIDE PLANT (OSP)

1.3 DEFINITIONS

a. Unless otherwise specified or indicated, electrical and electronics terms used in these specifications, and on the drawings, shall be as defined in IEEE 100.

b. The technical sections referred to herein are those specification sections that describe products, installation procedures, and equipment operations and that refer to this section for detailed description of submittal types.

c. The technical paragraphs referred to herein are those paragraphs in PART 2 - PRODUCTS and PART 3 - EXECUTION of the technical sections that describe products, systems, installation procedures, equipment, and test methods.

1.4 ELECTRICAL CHARACTERISTICS

Electrical characteristics for this project shall be 13.2 kV primary, three phase, three wire, 60 Hz, and 480Y/277 volts secondary, single and three phase, three and four wire. Final connections to the power distribution system at the existing manhole shall be made by the Contractor as directed by the Contracting Officer.

1.5 ADDITIONAL SUBMITTALS INFORMATION

Submittals required in other sections that refer to this section must conform to the following additional requirements as applicable.

1.5.1 Shop Drawings (SD-02)

Include wiring diagrams and installation details of equipment indicating proposed location, layout and arrangement, control panels, accessories, piping, ductwork, and other items that must be shown to ensure a coordinated installation. Wiring diagrams shall identify circuit terminals and indicate the internal wiring for each item of equipment and the interconnection between each item of equipment. Drawings shall indicate adequate clearance for operation, maintenance, and replacement of operating equipment devices.

1.5.2 Product Data (SD-03)

Submittal shall include performance and characteristic curves.

1.6 QUALITY ASSURANCE

1.6.1 Regulatory Requirements

In each of the publications referred to herein, consider the advisory provisions to be mandatory, as though the word, "shall" had been substituted for "should" wherever it appears. Interpret references in these publications to the "authority having jurisdiction," or words of similar meaning, to mean the Contracting Officer. Equipment, materials, installation, and workmanship shall be in accordance with the mandatory and advisory provisions of NFPA 70 unless more stringent requirements are specified or indicated.

1.6.2 Standard Products

Provide materials and equipment that are products of manufacturers regularly engaged in the production of such products which are of equal material, design and workmanship. Products shall have been in satisfactory commercial or industrial use for 2 years prior to bid opening. The 2-year period shall include applications of equipment and materials under similar circumstances and of similar size. The product shall have been on sale on the commercial market through advertisements, manufacturers' catalogs, or brochures during the 2-year period. Where two or more items of the same class of equipment are required, these items shall be products of a single manufacturer; however, the component parts of the item need not be the products of the same manufacturer unless stated in the technical section.

1.6.2.1 Alternative Qualifications

Products having less than a 2-year field service record will be acceptable if a certified record of satisfactory field operation for not less than 6000 hours, exclusive of the manufacturers' factory or laboratory tests, is furnished.

1.6.2.2 Material and Equipment Manufacturing Date

Products manufactured more than 3 years prior to date of delivery to site shall not be used, unless specified otherwise.

1.7 WARRANTY

The equipment items shall be supported by service organizations which are reasonably convenient to the equipment installation in order to render satisfactory service to the equipment on a regular and emergency basis during the warranty period of the contract.

1.8 POSTED OPERATING INSTRUCTIONS

Provide for each system and principal item of equipment as specified in the technical sections for use by operation and maintenance personnel. The operating instructions shall include the following:

a. Wiring diagrams, control diagrams, and control sequence for each principal system and item of equipment.

b. Start up, proper adjustment, operating, lubrication, and shutdown procedures.

c. Safety precautions.

d. The procedure in the event of equipment failure.

e. Other items of instruction as recommended by the manufacturer of each system or item of equipment.

Print or engrave operating instructions and frame under glass or in approved laminated plastic. Post instructions where directed. For operating instructions exposed to the weather, provide weather-resistant materials or weatherproof enclosures. Operating instructions shall not fade when exposed to sunlight and shall be secured to prevent easy removal or peeling.

1.9 MANUFACTURER'S NAMEPLATE

Each item of equipment shall have a nameplate bearing the manufacturer's name, address, model number, and serial number securely affixed in a conspicuous place; the nameplate of the distributing agent will not be acceptable.

1.10 FIELD FABRICATED NAMEPLATES

ASTM D709. Provide laminated plastic nameplates for each equipment enclosure, relay, switch, and device; as specified in the technical sections or as indicated on the drawings. Each nameplate inscription shall identify the function and, when applicable, the position. Nameplates shall be melamine plastic, 0.125 inch thick, white with black center core. Surface shall be matte finish. Corners shall be square. Accurately align lettering and engrave into the core. Minimum size of nameplates shall be one by 2.5 inches. Lettering shall be a minimum of 0.25 inch high normal block style.

1.11 WARNING SIGNS

Provide warning signs for the enclosures of electrical equipment including substations, pad-mounted transformers, pad-mounted switches, generators, and switchgear having a nominal rating exceeding 600 volts.

a. When the enclosure integrity of such equipment is specified to be in accordance with IEEE C57.12.28 or IEEE C57.12.29, such as for pad-mounted transformers, provide self-adhesive warning signs on the outside of the high voltage compartment door(s). Sign shall be a decal and shall have nominal dimensions of 7 by 10 inches with the legend "DANGER HIGH VOLTAGE" printed in two lines of nominal 2 inch high letters. The word "DANGER" shall be in white letters on a red background and the words "HIGH VOLTAGE" shall be in black letters on a white background. Decal shall be Panduit No. PPSO710D72 or approved equal.

1.12 ELECTRICAL REQUIREMENTS

Electrical installations shall conform to IEEE C2, NFPA 70, and requirements specified herein.

1.13 INSTRUCTION TO GOVERNMENT PERSONNEL

Where specified in the technical sections, furnish the services of competent instructors to give full instruction to designated Government personnel in the adjustment, operation, and maintenance of the specified systems and equipment, including pertinent safety requirements as required. Instructors shall be thoroughly familiar with all parts of the installation and shall be trained in operating theory as well as practical operation and maintenance work. Instruction shall be given during the first regular work week after the equipment or system has been accepted and turned over to the Government for regular operation. The number of man-days (8 hours per day) of instruction furnished shall be as specified in the individual section.

PART 2 PRODUCTS

2.1 FACTORY APPLIED FINISH

Electrical equipment shall have factory-applied painting systems which

shall, as a minimum, meet the requirements of NEMA 250 corrosion-resistance test and the additional requirements specified in the technical sections.

PART 3 EXECUTION

3.1 FIELD APPLIED PAINTING

Paint electrical equipment as required to match finish of adjacent surfaces or to meet the indicated or specified safety criteria. Painting shall be as specified in Section 09 90 00 PAINTS AND COATINGS.

3.2 FIELD FABRICATED NAMEPLATE MOUNTING

Provide number, location, and letter designation of nameplates as indicated. Fasten nameplates to the device with a minimum of two sheet-metal screws or two rivets.

3.3 WARNING SIGN MOUNTING

Provide the number of signs required to be readable from each accessible side, but space the signs a maximum of 30 feet apart.

-- End of Section --

SECTION 26 05 48.00 10

SEISMIC PROTECTION FOR ELECTRICAL EQUIPMENT
10/07

PART 1 GENERAL

1.1 REFERENCES

The publications listed below form a part of this specification to the extent referenced. The publications are referred to within the text by the basic designation only.

AMERICAN INSTITUTE OF STEEL CONSTRUCTION (AISC)

AISC 325	(2011) Steel Construction Manual

ASTM INTERNATIONAL (ASTM)

ASTM E580/E580M	(2011; E 2013) Application of Ceiling Suspension Systems for Acoustical Tile and Lay-In Panels in Areas Requiring Moderate Seismic Restraint

U.S. DEPARTMENT OF DEFENSE (DOD)

UFC 3-310-04	(2012) Seismic Design for Buildings

UNDERWRITERS LABORATORIES (UL)

UL 1598	(2008; Reprint Oct 2012) Luminaires

1.2 SYSTEM DESCRIPTION

1.2.1 General Requirements

The requirements for seismic protection measures described in this section shall be applied to the electrical equipment and systems listed below. Structural requirements shall be in accordance with Section 13 48 00 SEISMIC PROTECTION FOR MISCELLANEOUS EQUIPMENT.

1.2.2 Electrical Equipment

Electrical equipment shall include the following items to the extent required on the drawings or in other sections of these specifications:

Control Panels
Pumps with Motors
Light Fixtures
Motor Control Centers
HVAC Units

Transformers
Racks
Panelboards

1.2.3 Contractor Designed Bracing

Submit copies of the Design Calculations with the Drawings. Calculations shall be approved, certified, stamped and signed by a Registered Professional Engineer. Calculations shall verify the capability of structural members to which bracing is attached for carrying the load from the brace. Design the bracing in accordance with UFC 3-310-04 and additional data furnished by the Contracting Officer. Resistance to lateral forces induced by earthquakes shall be accomplished without consideration of friction resulting from gravity loads. UFC 3-310-04 uses parameters for the building, not for the equipment in the building; therefore, corresponding adjustments to the formulas shall be required. Loadings determined using UFC 3-310-04 are based on strength design; therefore, AISC 325 shall be used for the design.

1.2.4 Conduits Requiring No Special Seismic Restraints

Seismic restraints may be omitted from electrical conduit less than 2-1/2 inches trade size. All other interior conduit, shall be seismically protected as specified.

1.3 EQUIPMENT REQUIREMENTS

Submit detail drawings along with catalog cuts, templates, and erection and installation details, as appropriate, for the items listed. Submittals shall be complete in detail, indicating thickness, type, grade, class of metal, and dimensions; and shall show construction details, reinforcement, anchorage, and installation with relation to the building construction. Submit copies of the design calculations with the detail drawings. Calculations shall be stamped by a registered engineer and shall verify the capability of structural members to which bracing is attached for carrying the load from the brace.

1.3.1 Rigidly Mounted Equipment

The following specific items of equipment to be furnished under this contract shall be constructed and assembled to withstand the seismic forces specified in UFC 3-310-04. Each item of rigid electrical equipment shall be entirely located and rigidly attached on one side only of a building expansion joint. Piping, electrical conduit, etc., which cross the expansion joint shall be provided with flexible joints that are capable of accommodating displacements equal to the full width of the joint in both orthogonal directions.

Transformers
Motor Control Centers

1.3.2 Nonrigid or Flexibly-Mounted Equipment

The following specific items of equipment to be furnished: shall be constructed and assembled to resist a horizontal lateral force of 0.088 times the operating weight of the equipment at the vertical center of

gravity of the equipment.

1.4 SUBMITTALS

Government approval is required for submittals with a "G" designation; submittals not having a "G" designation are for Contractor Quality Control approval. Submit the following in accordance with Section 01 33 00 SUBMITTAL PROCEDURES:

SD-02 Shop Drawings

Lighting Fixtures in Buildings
Equipment Requirements

SD-03 Product Data

Lighting Fixtures in Buildings; G
Equipment Requirements; G
Contractor Designed Bracing; G

PART 2 PRODUCTS

2.1 LIGHTING FIXTURE SUPPORTS

Lighting fixtures and supports shall conform to UL 1598.

2.2 SWAY BRACING MATERIALS

Sway bracing materials (e.g. rods, plates, rope, angles, etc.) shall be as specified in Section 13 48 00 SEISMIC PROTECTION FOR MISCELLANEOUS EQUIPMENT.

PART 3 EXECUTION

3.1 SWAY BRACES FOR CONDUIT

Conduit shall be braced as for an equivalent weight pipe in accordance with Section 13 48 00.00 10 SEISMIC PROTECTION FOR MECHANICAL EQUIPMENT.

3.2 LIGHTING FIXTURES IN BUILDINGS

Lighting fixtures and supports shall conform to the following:

3.2.1 Pendant Fixtures

Pendant fixtures shall conform to the requirements of UFC 3-310-04.

3.2.2 Ceiling Attached Fixtures

3.2.2.1 Recessed Fixtures

Recessed individual or continuous-row mounted fixtures shall be supported by a seismic-resistant suspended ceiling support system built in accordance with ASTM E580/E580M. Seismic protection for the fixtures shall conform to the requirements of UFC 3-310-04. Recessed lighting fixtures not over 56 pounds in weight may be supported by and attached directly to the ceiling system runners using screws or bolts, number and size as required by the seismic design. Fixture accessories, including louvers, diffusers, and lenses shall have lock or screw attachments.

3.2.2.2 Surface-Mounted Fixtures

Surface-mounted individual or continuous-row fixtures shall be attached to a seismic-resistant ceiling support system built in accordance with ASTM E580/E580M. Seismic protection for the fixtures shall conform to the requirements of UFC 3-310-04.

3.2.3 Assembly Mounted on Outlet Box

A supporting assembly, that is intended to be mounted on an outlet box, shall be designed to accommodate mounting features on 4 inch boxes, plaster rings, and fixture studs.

3.2.4 Wall-Mounted Emergency Light Unit

Attachments for wall-mounted emergency light units shall be designed and secured for the worst expected seismic disturbance at the site.

3.2.5 Lateral Force

Structural requirements for light fixture bracing shall be in accordance with Section 13 48 00 SEISMIC PROTECTION FOR MISCELLANEOUS EQUIPMENT.

-- End of Section --

SECTION 26 08 00

APPARATUS INSPECTION AND TESTING
08/08

PART 1 GENERAL

1.1 REFERENCES

The publications listed below form a part of this specification to the extent referenced. The publications are referred to within the text by the basic designation only.

INTERNATIONAL ELECTRICAL TESTING ASSOCIATION (NETA)

NETA ATS	(2013) Standard for Acceptance Testing Specifications for Electrical Power Equipment and Systems

1.2 RELATED REQUIREMENTS

Section 26 00 00.00 20 BASIC ELECTRICAL MATERIALS AND METHODS applies to this section with additions and modifications specified herein.

1.3 SUBMITTALS

Government approval is required for submittals with a "G" designation; submittals not having a "G" designation are [for Contractor Quality Control approval. The following shall be submitted in accordance with Section 01 33 00 SUBMITTAL PROCEDURES:

SD-06 Test Reports

Acceptance tests and inspections; G

SD-07 Certificates

Qualifications of organization, and lead engineering technician; G

Acceptance test and inspections procedure; G

1.4 QUALITY ASSURANCE

1.4.1 Qualifications

Contractor shall engage the services of a qualified testing organization to provide inspection, testing, calibration, and adjustment of the electrical distribution system and generation equipment listed in paragraph entitled "Acceptance Tests and Inspections" herein. Organization shall be independent of the supplier, manufacturer, and installer of the equipment. The organization shall be a first tier subcontractor. No work required by this section of the specification shall be performed by a second tier subcontractor.

a. Submit name and qualifications of organization. Organization shall have been regularly engaged in the testing of electrical materials, devices, installations, and systems for a minimum of 5 years. The organization shall have a calibration program, and test instruments

used shall be calibrated in accordance with NETA ATS.

b. Submit name and qualifications of the lead engineering technician performing the required testing services. Include a list of three comparable jobs performed by the technician with specific names and telephone numbers for reference. Testing, inspection, calibration, and adjustments shall be performed by an engineering technician, certified by NETA or the National Institute for Certification in Engineering Technologies (NICET) with a minimum of 5 years' experience inspecting, testing, and calibrating electrical distribution and generation equipment, systems, and devices.

1.4.2 Acceptance Tests and Inspections Reports

Submit certified copies of inspection reports and test reports. Reports shall include certification of compliance with specified requirements, identify deficiencies, and recommend corrective action when appropriate. Type and neatly bind test reports to form a part of the final record. Submit test reports documenting the results of each test not more than 10 days after test is completed.

1.4.3 Acceptance Test and Inspections Procedure

Submit test procedure reports for each item of equipment to be field tested at least 45 days prior to planned testing date. Do not perform testing until after test procedure has been approved.

PART 2 PRODUCTS

Not used.

PART 3 EXECUTION

3.1 ACCEPTANCE TESTS AND INSPECTIONS

Testing organization shall perform acceptance tests and inspections. Test methods, procedures, and test values shall be performed and evaluated in accordance with NETA ATS, the manufacturer's recommendations, and paragraph entitled "Field Quality Control" of each applicable specification section. Tests identified as optional in NETA ATS are not required unless otherwise specified. Equipment shall be placed in service only after completion of required tests and evaluation of the test results have been completed. Contractor shall supply to the testing organization complete sets of shop drawings, settings of adjustable devices, and other information necessary for an accurate test and inspection of the system prior to the performance of any final testing. Contracting Officer shall be notified at least 14 days in advance of when tests will be conducted by the testing organization. Perform acceptance tests and inspections on applicable equipment and systems specified in the following sections:

a. Section 26 12 19.10 THREE-PHASE PAD-MOUNTED TRANSFORMERS

3.2 SYSTEM ACCEPTANCE

Final acceptance of the system is contingent upon satisfactory completion

of acceptance tests and inspections.

3.3 PLACING EQUIPMENT IN SERVICE

A representative of the approved testing organization shall be present when equipment tested by the organization is initially energized and placed in service.

-- End of Section --

SECTION 26 12 19.10

THREE-PHASE PAD-MOUNTED TRANSFORMERS
02/12

PART 1 GENERAL

1.1 REFERENCES

The publications listed below form a part of this specification to the extent referenced. The publications are referred to in the text by the basic designation only.

ASTM INTERNATIONAL (ASTM)

ASTM A240/A240M	(2013c) Standard Specification for Chromium and Chromium-Nickel Stainless Steel Plate, Sheet, and Strip for Pressure Vessels and for General Applications
ASTM D1535	(2013) Specifying Color by the Munsell System
ASTM D877	(2002; R 2007) Standard Test Method for Dielectric Breakdown Voltage of Insulating Liquids Using Disk Electrodes
ASTM D92	(2012b) Standard Test Method for Flash and Fire Points by Cleveland Open Cup Tester
ASTM D97	(2012) Pour Point of Petroleum Products

FM GLOBAL (FM)

FM APP GUIDE	(updated on-line) Approval Guide http://www.approvalguide.com/

INSTITUTE OF ELECTRICAL AND ELECTRONICS ENGINEERS (IEEE)

IEEE 100	(2000; Archived) The Authoritative Dictionary of IEEE Standards Terms
IEEE 386	(2006; INT 1 2011) Standard for Separable Insulated Connector Systems for Power Distribution Systems Above 600V
IEEE C2	(2012; Errata 2012; INT 1-4 2012; INT 5-6 2013) National Electrical Safety Code
IEEE C37.47	(2011) Standard for High Voltage Current-Limiting Type Distribution Class Fuses and Fuse Disconnecting Switches
IEEE C57.12.00	(2010) Standard General Requirements for Liquid-Immersed Distribution, Power, and Regulating Transformers
IEEE C57.12.28	(2005; INT 3 2011) Standard for

	Pad-Mounted Equipment - Enclosure Integrity
IEEE C57.12.34	(2009) Standard for Requirements for Pad-Mounted, Compartmental-Type, Self-Cooled, Three-Phase Distribution Transformers, 5 MVA and Smaller; High Voltage, 34.5 kV Nominal System Voltage and Below; Low Voltage, 15 kV Nominal System Voltage and Below
IEEE C57.12.90	(2010) Standard Test Code for Liquid-Immersed Distribution, Power, and Regulating Transformers
IEEE C57.98	(2011) Guide for Transformer Impulse Tests
IEEE C62.11	(2012) Standard for Metal-Oxide Surge Arresters for Alternating Current Power Circuits (>1kV)

INTERNATIONAL ELECTRICAL TESTING ASSOCIATION (NETA)

NETA ATS	(2013) Standard for Acceptance Testing Specifications for Electrical Power Equipment and Systems

NATIONAL FIRE PROTECTION ASSOCIATION (NFPA)

NFPA 70	(2014; AMD 1 2013; Errata 2013; AMD 2 2013) National Electrical Code

ORGANISATION FOR ECONOMIC CO-OPERATION AND DEVELOPMENT (OECD)

OECD Test 203	(1992) Fish Acute Toxicity Test

U.S. ENVIRONMENTAL PROTECTION AGENCY (EPA)

EPA 712-C-98-075	(1998) Fate, Transport and Transformation Test Guidelines - OPPTS 835.3100- "Aerobic Aquatic Biodegradation"
EPA 821-R-02-012	(2002) Methods for Measuring the Acute Toxicity of Effluents and Receiving Waters to Freshwater and Marine Organisms

U.S. NATIONAL ARCHIVES AND RECORDS ADMINISTRATION (NARA)

10 CFR 431	Energy Efficiency Program for Certain Commercial and Industrial Equipment

UNDERWRITERS LABORATORIES (UL)

UL 467	(2007) Grounding and Bonding Equipment

1.2 RELATED REQUIREMENTS

Section 26 08 00 APPARATUS INSPECTION AND TESTING applies to this section, with the additions and modifications specified herein.

1.3 DEFINITIONS

Unless otherwise specified or indicated, electrical and electronics terms used in these specifications, and on the drawings, shall be as defined in IEEE 100.

1.4 SUBMITTALS

Government approval is required for submittals with a "G" designation; submittals not having a "G" designation are for Contractor Quality Control approval. The following shall be submitted in accordance with Section 01 33 00 SUBMITTAL PROCEDURES:

SD-02 Shop Drawings

Pad-mounted transformer drawings; G

SD-03 Product Data

Pad-mounted transformers; G

Submittal shall include manufacturer's information for each component, device, insulating fluid, and accessory provided with the transformer.

SD-06 Test Reports

Acceptance checks and tests; G

Submittal shall include acceptance criteria and limits for each test in accordance with NETA ATS "Test Values".

SD-07 Certificates

Transformer Efficiencies; G

Submit certification, including supporting calculations, from the manufacturer indicating conformance with the paragraph entitled "Specified Transformer Efficiencies."

SD-09 Manufacturer's Field Reports

Pad-mounted transformer design tests; G

Pad-mounted transformer routine and other tests; G

SD-10 Operation and Maintenance Data

Transformer(s), Data Package 5; G

Submit operation and maintenance data in accordance with Section 01 78 23 OPERATION AND MAINTENANCE DATA and as specified herein.

SD-11 Closeout Submittals

Transformer test schedule; G

Submit report of test results as specified by paragraph entitled "Field Quality Control."

1.5 QUALITY ASSURANCE

1.5.1 Pad-Mounted Transformer Drawings

Drawings shall indicate, but not be limited to the following:

a. An outline drawing, with front, top, and side views.

b. ANSI nameplate data.

c. Elementary diagrams and wiring diagrams with terminals identified of watthour meter and current transformers.

d. One-line diagram, including switch(es), current transformers, meters, and fuses.

e. Manufacturer's published time-current curves (on full size logarithmic paper) of the transformer high side fuses.

1.5.2 Regulatory Requirements

In each of the publications referred to herein, consider the advisory provisions to be mandatory, as though the word, "shall" had been substituted for "should" wherever it appears. Interpret references in these publications to the "authority having jurisdiction," or words of similar meaning, to mean the Contracting Officer. Equipment, materials, installation, and workmanship shall be in accordance with the mandatory and advisory provisions of NFPA 70 unless more stringent requirements are specified or indicated.

1.5.3 Standard Products

Provide materials and equipment that are products of manufacturers regularly engaged in the production of such products which are of equal material, design and workmanship. Products shall have been in satisfactory commercial or industrial use for 2 years prior to bid opening. The 2-year period shall include applications of equipment and materials under similar circumstances and of similar size. The product shall have been on sale on the commercial market through advertisements, manufacturers' catalogs, or brochures during the 2-year period. Where two or more items of the same class of equipment are required, these items shall be products of a single manufacturer; however, the component parts of the item need not be the products of the same manufacturer unless stated in this section.

1.5.3.1 Alternative Qualifications

Products having less than a 2-year field service record will be acceptable if a certified record of satisfactory field operation for not less than 6000 hours, exclusive of the manufacturers' factory or laboratory tests, is furnished.

1.5.3.2 Material and Equipment Manufacturing Date

Products manufactured more than 3 years prior to date of delivery to site shall not be used, unless specified otherwise.

1.6 MAINTENANCE

1.6.1 Additions to Operation and Maintenance Data

In addition to requirements of Data Package 5, include the following on the actual transformer(s) provided:

a. An instruction manual with pertinent items and information highlighted

b. An outline drawing, front, top, and side views

c. Prices for spare parts and supply list

d. Routine and field acceptance test reports

e. Fuse curves for primary fuses

f. Actual nameplate diagram

g. Date of purchase

1.7 WARRANTY

The equipment items shall be supported by service organizations which are reasonably convenient to the equipment installation in order to render satisfactory service to the equipment on a regular and emergency basis during the warranty period of the contract.

PART 2 PRODUCTS

2.1 PRODUCT COORDINATION

Products and materials not considered to be pad-mounted transformers and related accessories are specified in Section 26 20 00 INTERIOR DISTRIBUTION SYSTEM and Section 33 71 02 UNDERGROUND ELECTRICAL DISTRIBUTION.

2.2 THREE-PHASE PAD-MOUNTED TRANSFORMERS

IEEE C57.12.34, IEEE C57.12.28 and as specified herein.

2.2.1 Compartments

The high- and low-voltage compartments shall be separated by steel isolating barriers extending the full height and depth of the compartments. Compartment doors: hinged lift-off type with stop in open position and three-point latching.

2.2.1.1 High Voltage, Dead-Front

High-voltage compartment shall contain the incoming line, insulated high-voltage load-break connectors, bushing well inserts, feed thru inserts, six high-voltage bushing wells configured for loop feed application, load-break switch handle(s), access to oil-immersed bayonet fuses, dead-front surge arresters, tap changer handle, connector parking stands, and ground pad.

a. Insulated high-voltage load-break connectors: IEEE 386, rated 15 kV, 95 kV BIL. Current rating: 200 amperes rms continuous. Short time rating: 10,000 amperes rms symmetrical for a time duration of 0.17

seconds. Connector shall have a steel reinforced hook-stick eye, grounding eye, test point, and arc-quenching contact material.

b. Bushing well inserts and feed thru inserts. IEEE 386, 200 amperes, 15 kV Class. Provide a bushing well insert for each bushing well unless indicated otherwise. Provide feed thru inserts as indicated.

c. Load-break switch

Radial-feed oil-immersed type rated at 15 kV, 95 kV BIL, with a continuous current rating and load-break rating of 200 amperes, and a make-and-latch rating of 12,000 rms amperes symmetrical. Locate the switch handle in the high-voltage compartment.

d. Provide bayonet type, oil-immersed, expulsion fuses in series with oil-immersed, partial-range, current-limiting fuses. Bayonet fuse links shall sense both high currents and high oil temperature in order to provide thermal protection to the transformer. Coordinate transformer protection with expulsion fuse clearing low-current faults and current-limiting fuse clearing high-current faults beyond the interrupting rating of the expulsion fuse. In order to eliminate or minimize oil spills, the bayonet fuse assembly shall include an oil retention valve inside the housing which closes when the fuse holder is removed and an external drip shield. Warning shall be conspicuously displayed within the high-voltage compartment cautioning against removing or inserting fuses unless the load-break switch is in the open position and the tank pressure has been released.

Bayonet fuse assembly: 150 kV BIL.

Oil-immersed current-limiting fuses: IEEE C37.47; 50,000 rms amperes symmetrical interrupting rating at the system voltage specified. Connect current-limiting fuses ahead of the radial-feed load-break switch.

e. Surge arresters: IEEE C62.11, rated 15 kV, fully shielded, dead-front, metal-oxide-varistor, elbow type with resistance-graded gap. Provide six arresters for loop feed circuits.

f. Parking stands: Provide a parking stand near each bushing.

g. Protective caps: IEEE 386, 200 Amperes, 15 kV Class. Provide insulated protective caps (not shipping caps) for insulating and sealing out moisture from unused bushings.

2.2.1.2 Low Voltage

Low-voltage compartment shall contain low-voltage bushings with NEMA spade terminals, accessories, metering, stainless steel or laser-etched anodized aluminum diagrammatic transformer nameplate, and ground pad.

a. Accessories shall include drain valve with sampler device, fill plug, pressure relief device, liquid level gage, pressure-vacuum gage, and dial type thermometer with maximum temperature indicator.

b. Metering: Provide as specified in Section 26 27 14.00 20 ELECTRICITY METERING.

2.2.2 Transformer

a. Less-flammable liquid-insulated, two winding, 60 hertz, 65 degrees C rise above a 30 degrees C average ambient, self-cooled type.

b. Transformer shall be rated 225 kVA.

c. Transformer voltage ratings: 13.2 kV Delta - 480/277 V GrdY.

d. Tap changer shall be externally operated, manual type for changing tap setting when the transformer is de-energized. Provide four 2.5 percent full capacity taps, two above and two below rated primary voltage. Tap changers shall clearly indicate which tap setting is in use.

e. Minimum tested percent impedance at 85 degrees C shall not be less than the following values:

2.87 for units rated 112.5kVA to 300kVA

f. Audible sound levels shall comply with the following:

kVA	DECIBELS (MAX
225	55

g. Transformer shall include lifting lugs and provisions for jacking under base. The transformer base construction shall be suitable for using rollers or skidding in any direction. Provide transformer top with an access handhole. Transformer shall have its kVA rating conspicuously displayed on its enclosure. The transformer shall have an insulated low-voltage neutral bushing with NEMA spade terminal, and with removable ground strap.

2.2.2.1 Specified Transformer Efficiencies

Provide transformer efficiency calculations utilizing the actual no-load and load loss values obtained during the routine tests performed on the actual transformer(s) prepared for this project. No-load losses (NLL) shall be referenced at 20 degrees C. Load losses (LL) shall be referenced at 55 degrees C and at 50 percent of the nameplate load. The transformer is not acceptable if the calculated transformer efficiency is less than the efficiency indicated in the "KVA / Efficiency" table below. That table is based on requirements contained within 10 CFR 431, Subpart K.

kVA	EFFICIENCY (percent)
225	99.17

2.2.3 Insulating Liquid

a. Less-flammable transformer liquids: NFPA 70 and FM APP GUIDE for less-flammable liquids having a fire point not less than 300 degrees C tested per ASTM D92 and a dielectric strength not less than 33 kV tested per ASTM D877. Provide identification of transformer as "non-PCB" and "manufacturer's name and type of fluid" on the nameplate.

The fluid shall be a biodegradable electrical insulating and cooling liquid classified by UL and approved by FM as "less flammable" fluids. The fluid shall meet the following fluid properties:

1. Pour point: ASTM D97, less than -15 degree C

2. Aquatic biodegradation: EPA 712-C-98-075, 100 percent

3. Trout toxicity: OECD Test 203, zero mortality of EPA 821-R-02-012, pass

2.2.3.1 Liquid-Filled Transformer Nameplates

Distribution transformers shall be provided with nameplate information in accordance with IEEE C57.12.00 and as modified or supplemented by this section.

2.2.4 Corrosion Protection

Entire transformer assembly, including tank and radiator, base, enclosure, and metering enclosure shall be fabricated of stainless steel conforming to ASTM A240/A240M, Type 304 or 304L. Form enclosure of stainless steel sheets. The optional use of aluminum is permitted for the metering enclosure.

Paint entire transformer assembly Munsell 7GY3.29/1.5 green. Paint coating system shall comply with IEEE C57.12.28 regardless of base, cabinet, and tank material. The Munsell color notation is specified in ASTM D1535.

2.3 WARNING SIGNS

Provide warning signs for the enclosures of pad-mounted transformers having a nominal rating exceeding 600 volts.

a. When the enclosure integrity of such equipment is specified to be in accordance with IEEE C57.12.28, such as for pad-mounted transformers, provide self-adhesive warning signs on the outside of the high voltage compartment door(s). Sign shall be a decal and shall have nominal dimensions of 7 by 10 inches with the legend "DANGER HIGH VOLTAGE" printed in two lines of nominal 2 inch high letters. The word "DANGER" shall be in white letters on a red background and the words "HIGH VOLTAGE" shall be in black letters on a white background. Decal shall be Panduit No. PPSO710D72 or approved equal.

2.4 Arc Flash Warning Label

Provide warning label for the enclosure of pad-mounted transformers. Locate this self-adhesive warning label on the outside of the high voltage compartment door warning of potential electrical arc flash hazards and appropriate PPE required. The label format shall be as indicated.

2.5 GROUNDING AND BONDING

UL 467. Provide grounding and bonding as specified in Section 33 71 02 UNDERGROUND ELECTRICAL DISTRIBUTION.

2.6 CAST-IN-PLACE CONCRETE

Concrete associated with electrical work for other than encasement of

underground ducts shall be 4000 psi minimum 28-day compressive strength unless specified otherwise. All concrete shall conform to the requirements of Section 03 30 00 CAST-IN-PLACE CONCRETE.

2.7 SOURCE QUALITY CONTROL

2.7.1 Transformer Test Schedule

The Government reserves the right to witness tests. Provide transformer test schedule for tests to be performed at the manufacturer's test facility. Submit required test schedule and location, and notify the Contracting Officer 30 calendar days before scheduled test date. Notify Contracting Officer 15 calendar days in advance of changes to scheduled date.

a. Test Instrument Calibration

1. The manufacturer shall have a calibration program which assures that all applicable test instruments are maintained within rated accuracy.

2. The accuracy shall be directly traceable to the National Institute of Standards and Technology.

3. Instrument calibration frequency schedule shall not exceed 12 months for both test floor instruments and leased specialty equipment.

4. Dated calibration labels shall be visible on all test equipment.

5. Calibrating standard shall be of higher accuracy than that of the instrument tested.

6. Keep up-to-date records that indicate dates and test results of instruments calibrated or tested. For instruments calibrated by the manufacturer on a routine basis, in lieu of third party calibration, include the following:

   (a) Maintain up-to-date instrument calibration instructions and procedures for each test instrument.

   (b) Identify the third party/laboratory calibrated instrument to verify that calibrating standard is met.

2.7.2 Design Tests

IEEE C57.12.00 states that "design tests are made only on representative apparatus to substantiate the ratings assigned to all other apparatus of basically the same design." Submit design test reports (complete with test data, explanations, formulas, and results), in the same submittal package as the catalog data and drawings for the specified transformer(s). Design tests shall have been performed in accordance with IEEE C57.12.90 prior to the award of this contract.

a. Tests shall be certified and signed by a registered professional engineer.

b. Temperature rise: "Basically the same design" for the temperature rise test means a pad-mounted transformer with the same coil construction

(such as wire wound primary and sheet wound secondary), the same kVA, the same cooling type (ONAN), the same temperature rise rating, and the same insulating liquid as the transformer specified.

c. Lightning impulse: "Basically the same design" for the lightning impulse dielectric test means a pad-mounted transformer with the same BIL, the same coil construction (such as wire wound primary and sheet wound secondary), and a tap changer, if specified. Design lightning impulse tests shall include the primary windings only of that transformer.

   1. IEEE C57.12.90, paragraph 10.3 entitled "Lightning Impulse Test Procedures," and IEEE C57.98.

   2. State test voltage levels.

   3. Provide photographs of oscilloscope display waveforms or plots of digitized waveforms with test report.

d. Lifting and moving devices: "Basically the same design" requirement for the lifting and moving devices test means a test report confirming that the lifting device being used is capable of handling the weight of the specified transformer in accordance with IEEE C57.12.34.

e. Pressure: "Basically the same design" for the pressure test means a pad-mounted transformer with a tank volume within 30 percent of the tank volume of the transformer specified.

f. Short circuit: "Basically the same design" for the short circuit test means a pad-mounted transformer with the same kVA as the transformer specified.

2.7.3 Routine and Other Tests

IEEE C57.12.00. Routine and other tests shall be performed in accordance with IEEE C57.12.90 by the manufacturer on the actual transformer(s) prepared for this project to ensure that the design performance is maintained in production. Submit test reports, by serial number and receive approval before delivery of equipment to the project site. Required tests and testing sequence shall be as follows:

a. Phase relation

b. Ratio

c. No-load losses (NLL) and excitation current

d. Load losses (LL) and impedance voltage

e. Dielectric

   1. Impulse

   2. Applied voltage

   3. Induced voltage

f. Leak

PART 3 EXECUTION

3.1 INSTALLATION

Electrical installations shall conform to IEEE C2, NFPA 70, and to the requirements specified herein. Provide new equipment and materials unless indicated or specified otherwise.

3.2 GROUNDING

NFPA 70 and IEEE C2, except that grounding systems shall have a resistance to solid earth ground not exceeding 5 ohms.

3.2.1 Grounding Electrodes

Provide driven ground rods as specified in Section 33 71 02 UNDERGROUND ELECTRICAL DISTRIBUTION. Connect ground conductors to the upper end of ground rods by compression connector. Provide compression connectors at equipment end of ground conductors.

3.2.2 Pad-Mounted Transformer Grounding

Provide separate copper grounding conductors and connect them to the ground loop as indicated. When work in addition to that indicated or specified is required to obtain the specified ground resistance, the provision of the contract covering "Changes" shall apply.

3.2.3 Connections

Make joints in grounding conductors and loops by compression connector. Compression connectors shall be installed as specified in Section 33 71 02 UNDERGROUND ELECTRICAL DISTRIBUTION.

3.2.4 Grounding and Bonding Equipment

UL 467, except as indicated or specified otherwise.

3.3 INSTALLATION OF EQUIPMENT AND ASSEMBLIES

Install and connect pad-mounted transformers furnished under this section as indicated on project drawings, the approved shop drawings, and as specified herein.

3.4 FIELD APPLIED PAINTING

Where field painting of enclosures is required to correct damage to the manufacturer's factory applied coatings, provide manufacturer's recommended coatings and apply in accordance with manufacturer's instructions.

3.5 FOUNDATION FOR EQUIPMENT AND ASSEMBLIES

Mount transformer on concrete slab. Unless otherwise indicated, the slab shall be at least 8 inches thick, reinforced with a 6 by 6 - W2.9 by W2.9 mesh, placed uniformly 4 inches from the top of the slab. Slab shall be placed on a 6 inch thick, well-compacted gravel base. Top of concrete slab shall be approximately 4 inches above finished grade with gradual slope for drainage. Edges above grade shall have 1/2 inch chamfer. Slab shall be of adequate size to project at least 8 inches beyond the equipment.

Stub up conduits, with bushings, 2 inches into cable wells in the concrete pad. Coordinate dimensions of cable wells with transformer cable training areas.

3.5.1 Cast-In-Place Concrete

Cast-in-place concrete work shall conform to the requirements of Section 03 30 00 CAST-IN-PLACE CONCRETE.

3.5.2 Sealing

When the installation is complete, the Contractor shall seal all entries into the equipment enclosure with an approved sealing method. Seals shall be of sufficient strength and durability to protect all energized live parts of the equipment from rodents, insects, or other foreign matter.

3.6 FIELD QUALITY CONTROL

3.6.1 Performance of Acceptance Checks and Tests

Perform in accordance with the manufacturer's recommendations and include the following visual and mechanical inspections and electrical tests, performed in accordance with NETA ATS.

3.6.1.1 Pad-Mounted Transformers

a. Visual and mechanical inspection

1. Compare equipment nameplate data with specifications and approved shop drawings.

2. Inspect physical and mechanical condition. Check for damaged or cracked insulators and leaks.

3. Inspect anchorage, alignment, and grounding.

4. Verify the presence of PCB content labeling.

5. Verify the bushings and transformer interiors are clean.

6. Inspect all bolted electrical connections for high resistance using low-resistance ohmmeter, verifying tightness of accessible bolted electrical connections by calibrated torque-wrench method, or performing thermographic survey.

7. Verify correct liquid level in tanks and bushings.

8. Verify that positive pressure is maintained on gas-blanketed transformers.

9. Perform specific inspections and mechanical tests as recommended by manufacturer.

10. Verify de-energized tap changer position is left as specified.

11. Verify the presence of transformer surge arresters.

b. Electrical tests

1. Perform resistance measurements through all bolted connections with low-resistance ohmmeter.

2. Verify proper secondary voltage phase-to-phase and phase-to-neutral after energization and prior to loading.

3.6.1.2 Grounding System

a. Visual and mechanical inspection

1. Inspect ground system for compliance with contract plans and specifications.

b. Electrical tests

1. Perform ground-impedance measurements utilizing the fall-of-potential method. On systems consisting of interconnected ground rods, perform tests after interconnections are complete. On systems consisting of a single ground rod perform tests before any wire is connected. Take measurements in normally dry weather, not less than 48 hours after rainfall. Use a portable ground testing megger in accordance with manufacturer's instructions to test each ground or group of grounds. The instrument shall be equipped with a meter reading directly in ohms or fractions thereof to indicate the ground value of the ground rod or grounding systems under test.

2. Submit the measured ground resistance of each ground rod and grounding system, indicating the location of the rod and grounding system. Include the test method and test setup (i.e., pin location) used to determine ground resistance and soil conditions at the time the measurements were made.

3.6.1.3 Surge Arresters, Medium- and High-Voltage

a. Visual and mechanical inspection

1. Compare equipment nameplate data with specifications and approved shop drawings.

2. Inspect physical and mechanical condition.

3. Inspect anchorage, alignment, grounding, and clearances.

4. Verify the arresters are clean.

5. Inspect all bolted electrical connections for high resistance using low-resistance ohmmeter, verifying tightness of accessible bolted electrical connections by calibrated torque-wrench method, or performing thermographic survey.

6. Verify that the ground lead on each device is individually attached to a ground bus or ground electrode.

b. Electrical tests

1. Perform resistance measurements through all bolted connections with low-resistance ohmmeter, if applicable.

2. Perform an insulation-resistance test on each arrester, phase terminal-to-ground.

3. Test grounding connection.

3.6.2 Follow-Up Verification

Upon completion of acceptance checks and tests, the Contractor shall show by demonstration in service that circuits and devices are in good operating condition and properly performing the intended function. As an exception to requirements stated elsewhere in the contract, the Contracting Officer shall be given 5 working days advance notice of the dates and times of checking and testing.

-- End of Section --

SECTION 26 20 00

INTERIOR DISTRIBUTION SYSTEM
02/14

PART 1 GENERAL

1.1 REFERENCES

The publications listed below form a part of this specification to the extent referenced. The publications are referred to in the text by the basic designation only.

ASTM INTERNATIONAL (ASTM)

ASTM B1	(2013) Standard Specification for Hard-Drawn Copper Wire
ASTM B8	(2011) Standard Specification for Concentric-Lay-Stranded Copper Conductors, Hard, Medium-Hard, or Soft
ASTM D709	(2013) Laminated Thermosetting Materials

INSTITUTE OF ELECTRICAL AND ELECTRONICS ENGINEERS (IEEE)

IEEE 100	(2000; Archived) The Authoritative Dictionary of IEEE Standards Terms
IEEE 81	(2012) Guide for Measuring Earth Resistivity, Ground Impedance, and Earth Surface Potentials of a Ground System
IEEE C2	(2012; Errata 2012; INT 1-4 2012; INT 5-6 2013) National Electrical Safety Code

INTERNATIONAL ELECTRICAL TESTING ASSOCIATION (NETA)

NETA ATS	(2013) Standard for Acceptance Testing Specifications for Electrical Power Equipment and Systems

NATIONAL ELECTRICAL MANUFACTURERS ASSOCIATION (NEMA)

ANSI C80.1	(2005) American National Standard for Electrical Rigid Steel Conduit (ERSC)
ANSI C80.3	(2005) American National Standard for Electrical Metallic Tubing (EMT)
NEMA 250	(2008) Enclosures for Electrical Equipment (1000 Volts Maximum)
NEMA FU 1	(2012) Low Voltage Cartridge Fuses
NEMA ICS 1	(2000; R 2008; E 2010) Standard for Industrial Control and Systems: General Requirements

NEMA ICS 2	(2000; R 2005; Errata 2008) Standard for Controllers, Contactors, and Overload Relays Rated 600 V
NEMA ICS 3	(2005; R 2010) Medium-Voltage Controllers Rated 2001 to 7200 V AC
NEMA ICS 4	(2010) Terminal Blocks
NEMA ICS 6	(1993; R 2011) Enclosures
NEMA KS 1	(2001; R 2006) Enclosed and Miscellaneous Distribution Equipment Switches (600 V Maximum)
NEMA MG 1	(2011; Errata 2012) Motors and Generators
NEMA MG 10	(2001; R 2007) Energy Management Guide for Selection and Use of Fixed Frequency Medium AC Squirrel-Cage Polyphase Induction Motors
NEMA RN 1	(2005; R 2013) Polyvinyl-Chloride (PVC) Externally Coated Galvanized Rigid Steel Conduit and Intermediate Metal Conduit
NEMA ST 20	(1992; R 1997) Standard for Dry-Type Transformers for General Applications
NEMA TC 14	(2002) Standard for Reinforced Thermosetting Resin Conduit (RTRC) and Fittings
NEMA TC 2	(2013) Standard for Electrical Polyvinyl Chloride (PVC) Conduit
NEMA TC 3	(2013) Standard for Polyvinyl Chloride (PVC) Fittings for Use With Rigid PVC Conduit and Tubing
NEMA WD 1	(1999; R 2005; R 2010) Standard for General Color Requirements for Wiring Devices
NEMA WD 6	(2012) Wiring Devices Dimensions Specifications
NEMA Z535.4	(2011) American National Standard for Product Safety Signs and Labels

NATIONAL FIRE PROTECTION ASSOCIATION (NFPA)

NFPA 70	(2014; AMD 1 2013; Errata 2013; AMD 2 2013) National Electrical Code
NFPA 70E	(2012; Errata 2012) Standard for Electrical Safety in the Workplace

NFPA 780	(2014) Standard for the Installation of Lightning Protection Systems

U.S. NATIONAL ARCHIVES AND RECORDS ADMINISTRATION (NARA)

29 CFR 1910.147	Control of Hazardous Energy (Lock Out/Tag Out)

UNDERWRITERS LABORATORIES (UL)

UL 1	(2005; Reprint Jul 2012) Standard for Flexible Metal Conduit
UL 1063	(2006; Reprint Jul 2012) Machine-Tool Wires and Cables
UL 1203	(2013) UL Standard for Safety Explosion-Proof and Dust-Ignition-Proof Electrical Equipment for Use in Hazardous (Classified) Locations
UL 1449	(2006; Reprint Sep 2013) Surge Protective Devices
UL 198M	(2003; Reprint Feb 2013) Standard for Mine-Duty Fuses
UL 20	(2010; Reprint Feb 2012) General-Use Snap Switches
UL 2420	(2009; Reprint Sep 2012) UL Standard for Safety Belowground Reinforced Thermosetting Resin Conduit (RTRC) and Fittings
UL 2515	(2009; Reprint Sep 2012) UL Standard for Safety Aboveground Reinforced Thermosetting Resin Conduit (RTRC) and Fittings
UL 360	(2013; Reprint May 2013) Liquid-Tight Flexible Steel Conduit
UL 4248-1	(2007; Reprint Oct 2013) UL Standard for Safety Fuseholders - Part 1: General Requirements
UL 4248-12	(2007; Reprint Dec 2012) UL Standard for Safety Fuseholders - Part 12: Class R
UL 44	(2010) Thermoset-Insulated Wires and Cables
UL 467	(2007) Grounding and Bonding Equipment
UL 486A-486B	(2013) Wire Connectors
UL 486C	(2013) Splicing Wire Connectors
UL 489	(2013) Molded-Case Circuit Breakers,

	Molded-Case Switches, and Circuit-Breaker Enclosures
UL 498	(2012; Reprint Aug 2013) Attachment Plugs and Receptacles
UL 50	(2007; Reprint Apr 2012) Enclosures for Electrical Equipment, Non-environmental Considerations
UL 506	(2008; Reprint Oct 2013) Specialty Transformers
UL 508	(1999; Reprint Oct 2013) Industrial Control Equipment
UL 510	(2005; Reprint Jul 2013) Polyvinyl Chloride, Polyethylene and Rubber Insulating Tape
UL 514A	(2013) Metallic Outlet Boxes
UL 514B	(2012) Conduit, Tubing and Cable Fittings
UL 514C	(1996; Reprint Nov 2011) Nonmetallic Outlet Boxes, Flush-Device Boxes, and Covers
UL 6	(2007; reprint Nov 2010) Electrical Rigid Metal Conduit-Steel
UL 651	(2011; Reprint Mar 2012) Standard for Schedule 40 and 80 Rigid PVC Conduit and Fittings
UL 67	(2009; Reprint Jan 2013) Standard for Panelboards
UL 674	(2011; Reprint Jul 2013) Electric Motors and Generators for Use in Division 1 Hazardous (Classified) Locations
UL 797	(2007; Reprint Dec 2012) Electrical Metallic Tubing -- Steel
UL 83	(2008) Thermoplastic-Insulated Wires and Cables
UL 845	(2005; Reprint Jul 2011) Motor Control Centers
UL 869A	(2006) Reference Standard for Service Equipment
UL 870	(2008; Reprint Feb 2013) Standard for Wireways, Auxiliary Gutters, and Associated Fittings
UL 877	(1993; Reprint Dec 2009) Standard for

	Circuit Breakers and Circuit-Breaker Enclosures for Use in Hazardous (Classified) Locations
UL 886	(1994; Reprint Nov 2005) Standard for Outlet Boxes and Fittings for Use in Hazardous (Classified) Locations

1.2 DEFINITIONS

Unless otherwise specified or indicated, electrical and electronics terms used in these specifications, and on the drawings, are as defined in IEEE 100.

1.3 SUBMITTALS

Government approval is required for submittals with a "G" designation; submittals not having a "G" designation are for Contractor Quality Control approval. Submit in accordance with Section 01 33 00 SUBMITTAL PROCEDURES:

SD-02 Shop Drawings

Panelboards; G

Transformers; G

Motor control centers; G

Include wiring diagrams and installation details of equipment indicating proposed location, layout and arrangement, control panels, accessories, piping, ductwork, and other items that must be shown to ensure a coordinated installation. Identify circuit terminals on wiring diagrams and indicate the internal wiring for each item of equipment and the interconnection between each item of equipment. Indicate on the drawings adequate clearance for operation, maintenance, and replacement of operating equipment devices.

Wireways; G

Marking strips

SD-03 Product Data

Receptacles

Circuit breakers; G

Switches; G

Transformers; G

Motor controllers; G

Manual motor starters; G

Motor Control Centers; G

Surge protective devices; G

Include performance and characteristic curves.

SD-06 Test Reports

600-volt wiring test; G

Grounding system test; G

Transformer tests; G

SD-07 Certificates

Fuses; G

SD-09 Manufacturer's Field Reports

Transformer factory tests

SD-10 Operation and Maintenance Data

Electrical Systems, Data Package 5; G

Submit operation and maintenance data in accordance with Section 01 78 23, OPERATION AND MAINTENANCE DATA and as specified herein.

1.4 QUALITY ASSURANCE

1.4.1 Fuses

Submit coordination data as specified in paragraph, FUSES of this section.

1.4.2 Regulatory Requirements

In each of the publications referred to herein, consider the advisory provisions to be mandatory, as though the word, "shall" or "must" had been substituted for "should" wherever it appears. Interpret references in these publications to the "authority having jurisdiction," or words of similar meaning, to mean the Contracting Officer. Provide equipment, materials, installation, and workmanship in accordance with the mandatory and advisory provisions of NFPA 70 unless more stringent requirements are specified or indicated.

1.4.3 Standard Products

Provide materials and equipment that are products of manufacturers regularly engaged in the production of such products which are of equal material, design and workmanship and:

a. Have been in satisfactory commercial or industrial use for 2 years prior to bid opening including applications of equipment and materials under similar circumstances and of similar size.

b. Have been on sale on the commercial market through advertisements, manufacturers' catalogs, or brochures during the 2-year period.

c. Where two or more items of the same class of equipment are required, provide products of a single manufacturer; however, the component parts of the item need not be the products of the same manufacturer unless

stated in this section.

1.4.3.1 Alternative Qualifications

Products having less than a 2-year field service record will be acceptable if a certified record of satisfactory field operation for not less than 6000 hours, exclusive of the manufacturers' factory or laboratory tests, is furnished.

1.4.3.2 Material and Equipment Manufacturing Date

Products manufactured more than 3 years prior to date of delivery to site are not acceptable.

1.5 MAINTENANCE

1.5.1 Electrical Systems

Submit operation and maintenance manuals for electrical systems that provide basic data relating to the design, operation, and maintenance of the electrical distribution system for the building. Include the following:

a. Single line diagram of the "as-built" building electrical system.

b. Schematic diagram of electrical control system (other than HVAC, covered elsewhere).

c. Manufacturers' operating and maintenance manuals on active electrical equipment.

1.6 WARRANTY

Provide equipment items supported by service organizations that are reasonably convenient to the equipment installation in order to render satisfactory service to the equipment on a regular and emergency basis during the warranty period of the contract.

PART 2 PRODUCTS

2.1 MATERIALS AND EQUIPMENT

As a minimum, meet requirements of UL, where UL standards are established for those items, and requirements of NFPA 70 for all materials, equipment, and devices.

2.2 CONDUIT AND FITTINGS

Conform to the following:

2.2.1 Rigid Metallic Conduit

2.2.1.1 Rigid, Threaded Zinc-Coated Steel Conduit

ANSI C80.1, UL 6.

2.2.2 Rigid Nonmetallic Conduit

PVC Type EPC-40 in accordance with NEMA TC 2, UL 651, or Reinforced Thermosetting Resin Conduit (RTRC), in accordance with NEMA TC 14. RTRC-XW

provided shall be in accordance with UL 2420 and UL 2515.

2.2.3 Electrical, Zinc-Coated Steel Metallic Tubing (EMT)

UL 797, ANSI C80.3.

2.2.4 Plastic-Coated Rigid Steel

NEMA RN 1, Type 40(40 mils thick).

2.2.5 Flexible Metal Conduit

UL 1.

2.2.5.1 Liquid-Tight Flexible Metal Conduit, Steel

UL 360.

2.2.6 Fittings for Metal Conduit, EMT, and Flexible Metal Conduit

UL 514B. Ferrous fittings: cadmium- or zinc-coated in accordance with UL 514B.

2.2.6.1 Fittings for Rigid Metal Conduit

Threaded-type. Split couplings unacceptable.

2.2.6.2 Fittings for EMT

Steel compression type.

2.2.7 Fittings for Rigid Nonmetallic Conduit

NEMA TC 3 for PVC and NEMA TC 14, UL 2420 and UL 2515 for Reinforced Thermosetting Resin Conduit (RTRC), and UL 514B. RTRC-XW shall be in accordance with UL 2420 and UL 2515.

2.3 OUTLET BOXES AND COVERS

UL 514A, cadmium- or zinc-coated, if ferrous metal. UL 514C, if nonmetallic.

2.4 CABINETS, JUNCTION BOXES, AND PULL BOXES

Volume greater than 100 cubic inches, UL 50, hot-dip, zinc-coated, if sheet steel.

2.5 WIRES AND CABLES

Provide wires and cables in accordance applicable requirements of NFPA 70 and UL for type of insulation, jacket, and conductor specified or indicated. Do not use wires and cables manufactured more than 12 months prior to date of delivery to site.

2.5.1 Conductors

Provide the following:

a. Conductor sizes and capacities shown are based on copper, unless

indicated otherwise.

b. All conductors in 600V cables shall be stranded, except for solid #12 conductors may be used for lighting and receptacle applications.

c. Conductors for remote control, alarm, and signal circuits, classes 1, 2, and 3: stranded unless specifically indicated otherwise.

d. All conductors: copper.

2.5.1.1 Minimum Conductor Sizes

Provide minimum conductor size in accordance with the following:

a. Branch circuits: No. 12 AWG.

b. Class 1 remote-control and signal circuits: No. 14 AWG.

c. Class 2 low-energy, remote-control and signal circuits: No. 16 AWG.

d. Class 3 low-energy, remote-control, alarm and signal circuits: No. 22 AWG.

2.5.2 Color Coding

Provide color coding for service, feeder, branch, control, and signaling circuit conductors.

2.5.2.1 Ground and Neutral Conductors

Provide color coding of ground and neutral conductors as follows:

a. Grounding conductors: Green.

b. Neutral conductors: White.

c. Exception, where neutrals of more than one system are installed in same raceway or box, other neutrals color coding: white with a different colored (not green) stripe for each.

2.5.2.2 Ungrounded Conductors

Provide color coding of ungrounded conductors in different voltage systems as follows:

a. 208/120 volt, three-phase

1. Phase A - black

2. Phase B - red

3. Phase C - blue

b. 480/277 volt, three-phase

1. Phase A - brown

2. Phase B - orange

3. Phase C - yellow

c. 120/240 volt, single phase: Black and red

2.5.3 Insulation

Unless specified or indicated otherwise or required by NFPA 70, provide power and lighting wires rated for 600-volts, Type THWN/THHN -2 conforming to UL 83 or Type XHHW -2 conforming to UL 44, except that grounding wire may be type TW conforming to UL 83; remote-control and signal circuits: Type TC or Type THWN/THHN-2, conforming to UL 83. Where lighting fixtures require 90-degree Centigrade (C) conductors, provide only conductors with 90-degree C insulation or better.

2.5.4 Bonding Conductors

ASTM B1, solid bare copper wire for sizes No. 8 AWG and smaller diameter; ASTM B8, Class B, stranded bare copper wire for sizes No. 6 AWG and larger diameter.

2.5.5 Cable Tray Cable

UL listed; type TC or PLTC.

2.5.6 Mineral-Insulated, Metal-Sheathed Cable

UL listed and rated for a maximum exposure temperature of 2200 degrees F; NFPA 70, Type MI cable. Do not use sheathing containing asbestos fibers.

2.6 SPLICES AND TERMINATION COMPONENTS

UL 486A-486B for wire connectors and UL 510 for insulating tapes. Connectors for No. 10 AWG and smaller diameter wires: insulated, pressure-type in accordance with UL 486A-486B or UL 486C (twist-on splicing connector). Provide solderless terminal lugs on stranded conductors.

2.7 DEVICE PLATES

Provide the following:

a. UL listed, one-piece device plates for outlets to suit the devices installed.

b. For metal outlet boxes, plates on unfinished walls: zinc-coated sheet steel or cast metal having round or beveled edges.

c. For nonmetallic boxes and fittings, other suitable plates may be provided.

d. Plates on finished walls: nylon or lexan, minimum 0.03 inch wall thickness and same color as receptacle or toggle switch with which they are mounted.

e. Screws: machine-type with countersunk heads in color to match finish of plate.

f. Sectional type device plates are not be permitted.

g. Plates installed in wet locations: gasketed and UL listed for "wet

locations."

2.8 SWITCHES

2.8.1 Toggle Switches

NEMA WD 1, UL 20, single pole, and double pole, totally enclosed with bodies of thermoplastic or thermoset plastic and mounting strap with grounding screw. Include the following:

a. Handles: ivory thermoplastic.

b. Wiring terminals: screw-type, side-wired.

c. Contacts: silver-cadmium and contact arm - one-piece copper alloy.

d. Switches: rated quiet-type ac only, 120/277 volts, with current rating and number of poles indicated.

2.8.2 Disconnect Switches

NEMA KS 1. Provide heavy duty-type switches where indicated, where switches are rated higher than 240 volts, and for double-throw switches. Utilize Class R fuseholders and fuses for fused switches, unless indicated otherwise. Provide horsepower rated for switches serving as the motor-disconnect means. Provide switches in NEMA enclosure as indicated per NEMA ICS 6.

2.9 FUSES

NEMA FU 1. Provide complete set of fuses for each fusible switch panel. Coordinate time-current characteristics curves of fuses serving motors or connected in series with circuit breakers for proper operation. Submit coordination data for approval. Provide fuses with a voltage rating not less than circuit voltage.

2.9.1 Fuseholders

Provide in accordance with UL 4248-1.

2.9.2 Cartridge Fuses, Current Limiting Type (Class R)

UL 198M, Class RK-5 time-delay type. Provide only Class R associated fuseholders in accordance with UL 4248-12.

2.9.3 Cartridge Fuses, High-Interrupting Capacity, Current Limiting Type (Classes J, L, and CC)

UL 198M, Class J for zero to 600 amperes, Class L for 601 to 6,000 amperes, and Class CC for zero to 30 amperes.

2.9.4 Cartridge Fuses, Current Limiting Type (Class T)

UL 198M, Class T for zero to 1,200 amperes, 300 volts; and zero to 800 amperes, 600 volts.

2.10 RECEPTACLES

Provide the following:

a. UL 498, hard use (also designated heavy-duty), grounding-type.

b. Ratings and configurations: as indicated.

c. Bodies: ivory as per NEMA WD 1.

d. Face and body: thermoplastic supported on a metal mounting strap.

e. Dimensional requirements: per NEMA WD 6.

f. Screw-type, side-wired wiring terminals.

g. Grounding pole connected to mounting strap.

h. The receptacle: containing triple-wipe power contacts and double or triple-wipe ground contacts.

2.10.1 Weatherproof Receptacles

Provide receptacles, UL listed for use in "wet locations". Include cast metal box with gasketed, hinged, lockable and weatherproof while-in-use, die-cast metal/aluminum cover plate.

2.11 PANELBOARDS

Provide panelboards in accordance with the following:

a. UL 67 and UL 50 having a short-circuit current rating as indicated.

b. Panelboards for use as service disconnecting means: additionally conform to UL 869A.

c. Panelboards: circuit breaker-equipped.

d. Designed such that individual breakers can be removed without disturbing adjacent units or without loosening or removing supplemental insulation supplied as means of obtaining clearances as required by UL.

e. "Specific breaker placement" is required in panelboards to match the breaker placement indicated in the panelboard schedule on the drawings.

f. Use of "Subfeed Breakers" is not acceptable unless specifically indicated otherwise.

g. Main breaker: "separately" mounted "above" or "below" branch breakers.

h. Where "space only" is indicated, make provisions for future installation of breakers.

i. Directories: indicate load served by each circuit in panelboard.

j. Directories: indicate source of service to panelboard (e.g., Panel PA served from Panel MDP).

k. Provide new directories for existing panels modified by this project as indicated.

l. Type directories and mount in holder behind transparent protective covering.

m. Panelboards: listed and labeled for their intended use.

n. Panelboard nameplates: provided in accordance with paragraph FIELD FABRICATED NAMEPLATES.

2.11.1 Enclosure

Provide panelboard enclosure in accordance with the following:

a. UL 50.

b. NEMA 1 or 12 for indoor installations.

c. Cabinets: painted in accordance with paragraph PAINTING.

d. Front edges of cabinets: form-flanged or fitted with structural shapes welded or riveted to the sheet steel, for supporting the panelboard front.

e. All cabinets: fabricated such that no part of any surface on the finished cabinet deviates from a true plane by more than 1/8 inch.

f. Holes: provided in the back of indoor surface-mounted cabinets, with outside spacers and inside stiffeners, for mounting the cabinets with a 1/2 inch clear space between the back of the cabinet and the wall surface.

g. Flush doors: mounted on hinges that expose only the hinge roll to view when the door is closed.

h. Each door: fitted with a combined catch and lock, except that doors over 24 inches long provided with a three-point latch having a knob with a T-handle, and a cylinder lock.

i. Keys: two provided with each lock, with all locks keyed alike.

j. Finished-head cap screws: provided for mounting the panelboard fronts on the cabinets.

2.11.2 Panelboard Buses

Support bus bars on bases independent of circuit breakers. Design main buses and back pans so that breakers may be changed without machining, drilling, or tapping. Provide isolated neutral bus in each panel for connection of circuit neutral conductors. Provide separate ground bus identified as equipment grounding bus per UL 67 for connecting grounding conductors; bond to steel cabinet.

2.11.3 Circuit Breakers

UL 489,thermal magnetic-type having a minimum short-circuit current rating equal to the short-circuit current rating of the panelboard in which the circuit breaker will be mounted. Breaker terminals: UL listed as suitable for type of conductor provided. Series rated circuit breakers and plug-in circuit breakers are unacceptable.

2.11.3.1 Multipole Breakers

Provide common trip-type with single operating handle. Design breaker such that overload in one pole automatically causes all poles to open. Maintain phase sequence throughout each panel so that any three adjacent breaker poles are connected to Phases A, B, and C, respectively.

2.12 MOTOR SHORT-CIRCUIT PROTECTOR (MSCP)

Motor short-circuit protectors, also called motor circuit protectors (MCPs): UL 508 and UL 489, and provided as shown. Provide MSCPs that consist of an adjustable instantaneous trip circuit breaker used only in conjunction with a combination motor controller which provides coordinated motor branch-circuit overload and short-circuit protection. Rate MSCPs in accordance with the requirements of NFPA 70.

2.13 TRANSFORMERS

Provide transformers in accordance with the following:

a. NEMA ST 20, general purpose, dry-type, self-cooled, ventilated.

b. Provide transformers in NEMA 1 enclosure.

c. Transformer insulation system:

   1. 220 degrees C insulation system for transformers 15 kVA and greater, with temperature rise not exceeding 115 degrees C under full-rated load in maximum ambient of 40 degrees C.

   2. 180 degrees C insulation for transformers rated 10 kVA and less, with temperature rise not exceeding 150 degrees C under full-rated load in maximum ambient of 40 degrees C.

d. Transformer of 115 degrees C temperature rise: capable of carrying continuously 115 percent of nameplate kVA without exceeding insulation rating. Provide a transformer of 80 degrees C temperature rise capable of carrying continuously 130 percent of nameplate kVA without exceeding insulation rating when additional overload capacity is required.

2.14 MOTORS

Provide motors in accordance with the following:

a. NEMA MG 1.

b. Provide the size in terms of HP, or kVA, or full-load current, or a combination of these characteristics, and other characteristics, of each motor as indicated or specified.

c. Determine specific motor characteristics to ensure provision of correctly sized starters and overload heaters.

d. Rate motors for operation on 208-volt, 3-phase circuits with a terminal voltage rating of 200 volts, and those for operation on 480-volt, 3-phase circuits with a terminal voltage rating of 460 volts.

e. Use motors designed to operate at full capacity with voltage variation of plus or minus 10 percent of motor voltage rating.

f. Unless otherwise indicated, use continuous duty type motors if rated 1 HP and above.

g. Where fuse protection is specifically recommended by the equipment manufacturer, provide fused switches in lieu of non-fused switches indicated.

2.14.1 Premium Efficiency Polyphase Motors

Select polyphase motors based on high efficiency characteristics relative to typical characteristics and applications as listed in NEMA MG 10. In addition, continuous rated, polyphase squirrel-cage medium induction motors must meet the requirements for premium efficiency electric motors in accordance with NEMA MG 1, including the NEMA full load efficiency ratings. In exception, for motor-driven equipment with a minimum seasonal or overall efficiency rating, such as a SEER rating, provide equipment with motor to meet the overall system rating indicated.

2.14.2 Motor Sizes

Provide size for duty to be performed, not exceeding the full-load nameplate current rating when driven equipment is operated at specified capacity under most severe conditions likely to be encountered. When motor size provided differs from size indicated or specified, make adjustments to wiring, disconnect devices, and branch circuit protection to accommodate equipment actually provided. Provide controllers for motors rated 1-hp and above with electronic phase-voltage monitors designed to protect motors from phase-loss, undervoltage, and overvoltage. Provide protection for motors from immediate restart by a time adjustable restart relay.

2.14.3 Wiring and Conduit

Provide internal wiring for components of packaged equipment as an integral part of the equipment. Provide power wiring and conduit for field-installed equipment, and motor control equipment forming part of motor control centers or switchgear assemblies, the conduit and wiring connecting such centers, assemblies, or other power sources to equipment as specified herein. Power wiring and conduit: conform to the requirements specified herein. Control wiring: provided under, and conform to, the requirements of the section specifying the associated equipment.

2.15 MOTOR CONTROLLERS

Provide motor controllers in accordance with the following:

a. UL 508, NEMA ICS 1, and NEMA ICS 2.

b. Provide controllers with thermal overload protection in each phase, and one spare normally open auxiliary contact, and one spare normally closed auxiliary contact.

c. Provide controllers for motors rated 1-hp and above with electronic phase-voltage monitors designed to protect motors from phase-loss, undervoltage, and overvoltage.

d. Provide protection for motors from immediate restart by a time adjustable restart relay.

e. When used with pressure, float, or similar automatic-type or maintained-contact switch, provide a hand/off/automatic selector switch with the controller.

f. Connections to selector switch: wired such that only normal automatic regulatory control devices are bypassed when switch is in "hand" position.

g. Safety control devices, such as low and high pressure cutouts, high temperature cutouts, and motor overload protective devices: connected in motor control circuit in "hand" and "automatic" positions.

h. Control circuit connections to hand/off/automatic selector switch or to more than one automatic regulatory control device: made in accordance with indicated or manufacturer's approved wiring diagram.

i. Provide a disconnecting means, capable of being locked in the open position, for the motor that is located in sight from the motor location and the driven machinery location. As an alternative, provide a motor controller disconnect, capable of being locked in the open position, to serve as the disconnecting means for the motor if it is in sight from the motor location and the driven machinery location.

j. Overload protective devices: provide adequate protection to motor windings; be thermal inverse-time-limit type; and include manual reset-type pushbutton on outside of motor controller case.

k. Cover of combination motor controller and manual switch or circuit breaker: interlocked with operating handle of switch or circuit breaker so that cover cannot be opened unless handle of switch or circuit breaker is in "off" position.

l. Provide controllers in hazardous locations with classifications as indicated.

2.15.1 Control Wiring

Provide control wiring in accordance with the following:

a. All control wire: stranded tinned copper switchboard wire with 600-volt flame-retardant insulation Type SIS meeting UL 44, or Type MTW meeting UL 1063, and passing the VW-1 flame tests included in those standards.

b. Hinge wire: Class K stranding.

c. Current transformer secondary leads: not smaller than No. 10 AWG.

d. Control wire minimum size: No. 14 AWG.

e. Power wiring for 480-volt circuits and below: the same type as control wiring with No. 12 AWG minimum size.

f. Provide wiring and terminal arrangement on the terminal blocks to permit the individual conductors of each external cable to be terminated on adjacent terminal points.

2.15.2 Control Circuit Terminal Blocks

Provide control circuit terminal blocks in accordance with the following:

a. NEMA ICS 4.

b. Control circuit terminal blocks for control wiring: molded or fabricated type with barriers, rated not less than 600 volts.

c. Provide terminals with removable binding, fillister or washer head screw type, or of the stud type with contact and locking nuts.

d. Terminals: not less than No. 10 in size with sufficient length and space for connecting at least two indented terminals for 10 AWG conductors to each terminal.

e. Terminal arrangement: subject to the approval of the Contracting Officer with not less than four (4) spare terminals or 10 percent, whichever is greater, provided on each block or group of blocks.

f. Modular, pull apart, terminal blocks are acceptable provided they are of the channel or rail-mounted type.

g. Submit data showing that any proposed alternate will accommodate the specified number of wires, are of adequate current-carrying capacity, and are constructed to assure positive contact between current-carrying parts.

2.15.2.1 Types of Terminal Blocks

a. Short-Circuiting Type: Short-circuiting type terminal blocks: furnished for all current transformer secondary leads with provision for shorting together all leads from each current transformer without first opening any circuit. Terminal blocks: comply with the requirements of paragraph CONTROL CIRCUIT TERMINAL BLOCKS above.

b. Load Type: Load terminal blocks rated not less than 600 volts and of adequate capacity: provided for the conductors for NEMA Size 3 and smaller motor controllers and for other power circuits, except those for feeder tap units. Provide terminals of either the stud type with contact nuts and locking nuts or of the removable screw type, having length and space for at least two indented terminals of the size required on the conductors to be terminated. For conductors rated more than 50 amperes, provide screws with hexagonal heads. Conducting parts between connected terminals must have adequate contact surface and cross-section to operate without overheating. Provide each connected terminal with the circuit designation or wire number placed on or near the terminal in permanent contrasting color.

2.15.3 Control Circuits

Control circuits: maximum voltage of 120 volts derived from control transformer in same enclosure. Transformers: conform to UL 506, as applicable. Transformers, other than transformers in bridge circuits: provide primaries wound for voltage available and secondaries wound for correct control circuit voltage. Size transformers so that 80 percent of rated capacity equals connected load. Provide disconnect switch on primary side. Provide fuses in each ungrounded primary feeder. Provide one fused secondary lead with the other lead grounded. Provide for automatic

switchover and alarm upon failure of primary control circuit.

2.15.4 Enclosures for Motor Controllers

NEMA ICS 6.

2.15.5 Pushbutton Stations

Provide with "start/stop" momentary contacts having one normally open and one normally closed set of contacts, and red lights to indicate when motor is running. Stations: heavy duty, oil-tight design.

2.15.6 Pilot and Indicating Lights

Provide LED cluster lamps.

2.16 MANUAL MOTOR STARTERS (MOTOR RATED SWITCHES)

Single, Double and Three pole designed for surface mounting with overload protection and pilot lights.

2.16.1 Pilot Lights

Provide yoke-mounted, seven element LED cluster light module. Color: in accordance with NEMA ICS 2. Provide yoke-mounted, candelabra-base sockets rated 125 volts and fitted with glass or plastic jewels. Provide clear, 6 watt lamp in each pilot switch. Jewels for use with switches controlling motors: green; jewels for other purposes: red.

2.17 MOTOR CONTROL CENTERS

Provide motor control centers in accordance with the following:

a. UL 845, NEMA ICS 2, NEMA ICS 3.

b. Wiring: Class I, Type A B C, in NEMA Type 1 or 12 enclosure.

c. Provide control centers suitable for operation on 480-volt, 3-phase, 4 -wire, 60 Hz system with minimum short-circuit withstand and interrupting rating of 25,000 amperes rms symmetrical.

d. Incoming power feeder: cable entering at the bottom of enclosure and terminating on main protective device.

e. Main protective device: molded case circuit breaker rated at 25k amperes rms symmetrical interrupting capacity.

f. Interconnecting wires: copper.

g. Terminal blocks: plug-in-type so that controllers may be removed without disconnecting individual control wiring.

2.17.1 Bus Systems

Provide the following bus systems. Power bus: be braced to withstand fault current of 25,000 amperes rms symmetrical. Wiring troughs: isolated from horizontal and vertical bus bars.

2.17.1.1 Horizontal and Main Buses

Horizontal bus: continuous current rating of 600 amperes. Main bus: copper, silver-plated enclosed in isolated compartment at top of each vertical section. Main bus: isolated from wire troughs, starters, and other areas.

2.17.1.2 Vertical Bus

Vertical bus: continuous current rating of 300 amperes, and copper, silver-plated. Vertical bus: enclosed in flame-retardant, polyester glass "sandwich."

2.17.1.3 Ground Bus

Copper ground bus: provided full width of motor control center and equipped with necessary lugs.

2.17.1.4 Neutral Lug or Bus

Provide incoming neutral termination lug or bus, as indicated on electrical one-line, of appropriate capacity, as required.

2.17.2 Combination Motor Controllers

UL 508 and other requirements in paragraph, MOTOR CONTROLLERS. Provide in controller a molded case circuit breaker. Minimum short circuit withstand rating of combination motor controller: 25kA rms symmetrical amperes. Circuit breakers for combination controllers: magnetic only.

2.17.3 Pushbutton Stations

Provide with "start/stop" momentary contacts having one normally open and one normally closed set of contacts, and red lights to indicate when motor is running. Stations: heavy duty, oil-tight design.

2.17.4 Pilot and Indicating Lights

Provide LED cluster lamps.

2.18 LOCKOUT REQUIREMENTS

Provide disconnecting means capable of being locked out for machines and other equipment to prevent unexpected startup or release of stored energy in accordance with 29 CFR 1910.147. Comply with requirements of Division 23, "Mechanical" for mechanical isolation of machines and other equipment.

2.19 GROUNDING AND BONDING EQUIPMENT

2.19.1 Ground Rods

UL 467. Ground rods: copper-clad steel, with minimum diameter of 3/4 inch and minimum length 10 feet. Sectional ground rods are permitted.

2.19.2 Ground Bus

Copper ground bus: provided in the electrical equipment room as indicated.

2.20 HAZARDOUS LOCATIONS

Electrical materials, equipment, and devices for installation in hazardous locations, as defined by NFPA 70: specifically approved by Underwriters' Laboratories, Inc., or Factory Mutual for particular "Class," "Division," and "Group" of hazardous locations involved. Boundaries and classifications of hazardous locations: as indicated. Equipment in hazardous locations: comply with UL 1203 for electrical equipment and industrial controls, UL 886 for outlet boxes and fittings, UL 877 for circuit breakers and UL 674 for motors.

2.21 MANUFACTURER'S NAMEPLATE

Provide on each item of equipment a nameplate bearing the manufacturer's name, address, model number, and serial number securely affixed in a conspicuous place; the nameplate of the distributing agent will not be acceptable.

2.22 FIELD FABRICATED NAMEPLATES

Provide field fabricated nameplates in accordance with the following:

a. ASTM D709.

b. Provide laminated plastic nameplates for each equipment enclosure, relay, switch, and device; as specified or as indicated on the drawings.

c. Each nameplate inscription: identify the function and, when applicable, the position.

d. Nameplates: melamine plastic, 0.125 inch thick, white with black center core.

e. Surface: matte finish. Corners: square. Accurately align lettering and engrave into the core.

f. Minimum size of nameplates: one by 2.5 inches.

g. Lettering size and style: a minimum of 0.25 inch high normal block style.

2.23 WARNING SIGNS

Provide warning signs for flash protection in accordance with NFPA 70E and NEMA Z535.4 for switchboards, panelboards, industrial control panels, and motor control centers that are in other than dwelling occupancies and are likely to require examination, adjustment, servicing, or maintenance while energized. Provide field installed signs to warn qualified persons of potential electric arc flash hazards when warning signs are not provided by the manufacturer. Provide marking that is clearly visible to qualified persons before examination, adjustment, servicing, or maintenance of the equipment.

2.24 WIREWAYS

UL 870. Material: steel galvanized 16 gauge for heights and depths up to 6 by 6 inches, and 14 gauge for heights and depths up to 12 by 12 inches. Provide in length required for the application with hinged- cover NEMA 1 enclosure per NEMA ICS 6.

2.25 SURGE PROTECTIVE DEVICES

Provide parallel type surge protective devices (SPD) which comply with UL 1449 at the service entrance, panelboards, MCC and transformers. Provide surge protectors in a NEMA 1 enclosure per NEMA ICS 6. Use Type 1 or Type 2 SPD and connect on the load side of a dedicated circuit breaker.

Provide the following modes of protection:

FOR SINGLE PHASE AND THREE PHASE WYE CONNECTED SYSTEMS-
Phase to phase (L-L)
Each phase to neutral (L-N)
Neutral to ground (N-G)
Phase to ground (L-G)

SPDs at the service entrance: provide with a minimum surge current rating of 80,000 amperes for L-L mode minimum and 40,000 amperes for other modes (L-N, L-G, and N-G) and downstream SPDs rated 40,000 amperes for L-L mode minimum and 20,000 amperes for other modes (L-N, L-G, and N-G).

Provide SPDs per NFPA 780 for the lightning protection system.

Maximum L-N, L-G, and N-G Voltage Protection Rating:

600V for 120/240V, single phase system
1,200V for 480Y/277V, three phase system

Maximum L-L Voltage Protection Rating:

1,200V for 120/240V, single phase system
1,200V for 480Y/277V, three phase system

The minimum MCOV (Maximum Continuous Operating Voltage) rating for L-N and L-G modes of operation: 120 percent of nominal voltage for 240 volts and below; 115 percent of nominal voltage above 240 volts to 480 volts.

2.26 FACTORY APPLIED FINISH

Provide factory-applied finish on electrical equipment in accordance with the following:

a. NEMA 250 corrosion-resistance test and the additional requirements as specified herein.

b. Interior and exterior steel surfaces of equipment enclosures: thoroughly cleaned followed by a rust-inhibitive phosphatizing or equivalent treatment prior to painting.

c. Exterior surfaces: free from holes, seams, dents, weld marks, loose scale or other imperfections.

d. Interior surfaces: receive not less than one coat of corrosion-resisting paint in accordance with the manufacturer's standard practice.

e. Exterior surfaces: primed, filled where necessary, and given not less than two coats baked enamel with semigloss finish.

f. Equipment located indoors: ANSI Light Gray, and equipment located outdoors: ANSI Light Gray.

g. Provide manufacturer's coatings for touch-up work and as specified in paragraph FIELD APPLIED PAINTING.

2.27 SOURCE QUALITY CONTROL

2.27.1 Transformer Factory Tests

Submittal: include routine NEMA ST 20 transformer test results on each transformer and also provide the results of NEMA "design" and "prototype" tests that were made on transformers electrically and mechanically equal to those specified.

PART 3 EXECUTION

3.1 INSTALLATION

Electrical installations, including weatherproof and hazardous locations and ducts, plenums and other air-handling spaces: conform to requirements of NFPA 70 and IEEE C2 and to requirements specified herein.

3.1.1 Underground Service

Underground service conductors and associated conduit: continuous from service entrance equipment to outdoor power system connection.

3.1.2 Hazardous Locations

Perform work in hazardous locations, as defined by NFPA 70, in strict accordance with NFPA 70 for particular "Class," "Division," and "Group" of hazardous locations involved. Provide conduit and cable seals where required by NFPA 70. Provide conduit with tapered threads.

3.1.3 Service Entrance Identification

Service entrance disconnect devices, switches, and enclosures: labeled and identified as such.

3.1.3.1 Labels

Wherever work results in service entrance disconnect devices in more than one enclosure, as permitted by NFPA 70, label each enclosure, new and existing, as one of several enclosures containing service entrance disconnect devices. Label, at minimum: indicate number of service disconnect devices housed by enclosure and indicate total number of enclosures that contain service disconnect devices. Provide laminated plastic labels conforming to paragraph FIELD FABRICATED NAMEPLATES. Use lettering of at least 0.25 inch in height, and engrave on black-on-white matte finish. Service entrance disconnect devices in more than one enclosure: provided only as permitted by NFPA 70.

3.1.4 Wiring Methods

Provide insulated conductors installed in rigid steel conduit, rigid nonmetallic conduit, or EMT, except where specifically indicated or specified otherwise or required by NFPA 70 to be installed otherwise. Grounding conductor: separate from electrical system neutral conductor.

Provide insulated green equipment grounding conductor for circuit(s) installed in conduit and raceways. Minimum conduit size: 1/2 inch in diameter for low voltage lighting and power circuits. Vertical distribution in multiple story buildings: made with metal conduit in fire-rated shafts, with metal conduit extending through shafts for minimum distance of 6 inches.

3.1.4.1 Pull Wire

Install pull wires in empty conduits. Pull wire: plastic having minimum 200-pound force tensile strength. Leave minimum 36 inches of slack at each end of pull wire.

3.1.5 Conduit Installation

Unless indicated otherwise, conceal conduit under floor slabs and within finished walls, ceilings, and floors. Keep conduit minimum 6 inches away from parallel runs of flues and steam or hot water pipes. Install conduit parallel with or at right angles to ceilings, walls, and structural members where located above accessible ceilings and where conduit will be visible after completion of project. Run conduits under floor slab as if exposed.

3.1.5.1 Restrictions Applicable to EMT

a. Do not install underground.

b. Do not encase in concrete, mortar, grout, or other cementitious materials.

c. Do not use in areas subject to severe physical damage including but not limited to equipment rooms where moving or replacing equipment could physically damage the EMT.

d. Do not use in hazardous areas.

e. Do not use outdoors.

f. Do not use in fire pump rooms.

g. Do not use when the enclosed conductors must be shielded from the effects of High-altitude Electromagnetic Pulse (HEMP).

3.1.5.2 Restrictions Applicable to Nonmetallic Conduit

a. PVC Schedule 40 and RTRC

1. Do not use in areas where subject to severe physical damage, including but not limited to, mechanical equipment rooms, electrical equipment rooms, hospitals, power plants, missile magazines, and other such areas.

2. Do not use in hazardous (classified) areas. Schedule 80 PVC and RTRC-XW are permitted for use in Class 1 Division 2 areas.

3. Do not use in fire pump rooms.

4. Do not use in penetrating fire-rated walls or partitions, or fire-rated floors.

5. Do not use above grade, except where allowed in this section for rising through floor slab or indicated otherwise on drawings.

6. Do not use when the enclosed conductors must be shielded from the effects of High-altitude Electromagnetic Pulse (HEMP).

7. RTRC shall not be used within buildings.

3.1.5.3 Restrictions Applicable to Flexible Conduit

Use only as specified in paragraph FLEXIBLE CONNECTIONS. Do not use when the enclosed conductors must be shielded from the effects of High-altitude Electromagnetic Pulse (HEMP).

3.1.5.4 Underground Conduit

Plastic-coated rigid steel; PVC, Type EPC-40; or fiberglass. Convert nonmetallic conduit, other than RTRC and PVC Schedule 40, to plastic-coated rigid, steel conduit before rising through floor slab. Plastic coating: extend minimum 6 inches above floor.

3.1.5.5 Conduit for Circuits Rated Greater Than 600 Volts

Rigid metal conduit.

3.1.5.6 Conduit Installed Under Floor Slabs

Conduit run under floor slab: located a minimum of 12 inches below the vapor barrier. Seal around conduits at penetrations thru vapor barrier.

3.1.5.7 Conduit Through Floor Slabs

Where conduits rise through floor slabs, do not allow curved portion of bends to be visible above finished slab.

3.1.5.8 Stub-Ups

Provide conduits stubbed up through concrete floor for connection to free-standing equipment with adjustable top or coupling threaded inside for plugs, set flush with finished floor. Extend conductors to equipment in rigid steel conduit, except that flexible metal conduit may be used 6 inches above floor. Where no equipment connections are made, install screwdriver-operated threaded flush plugs in conduit end.

3.1.5.9 Conduit Support

Support conduit by pipe straps, wall brackets, threaded rod conduit hangers, or ceiling trapeze. Fasten by wood screws to wood; by toggle bolts on hollow masonry units; by concrete inserts or expansion bolts on concrete or brick; and by machine screws, welded threaded studs, or spring-tension clamps on steel work. Threaded C-clamps may be used on rigid steel conduit only. Do not weld conduits or pipe straps to steel structures. Do not exceed one-fourth proof test load for load applied to fasteners. Provide vibration resistant and shock-resistant fasteners attached to concrete ceiling. Do not cut main reinforcing bars for any holes cut to depth of more than 1 1/2 inches in reinforced concrete beams or to depth of more than 3/4 inch in concrete joints. Fill unused holes. In partitions of light steel construction, use sheet metal screws. In suspended-ceiling construction, run conduit above ceiling. Do not support conduit by ceiling

support system. Conduit and box systems: supported independently of both (a) tie wires supporting ceiling grid system, and (b) ceiling grid system into which ceiling panels are placed. Do not share supporting means between electrical raceways and mechanical piping or ducts. Coordinate installation with above-ceiling mechanical systems to assure maximum accessibility to all systems. Spring-steel fasteners may be used for lighting branch circuit conduit supports in suspended ceilings in dry locations. Where conduit crosses building expansion joints, provide suitable watertight expansion fitting that maintains conduit electrical continuity by bonding jumpers or other means. For conduits greater than 2 1/2 inches inside diameter, provide supports to resist forces of 0.5 times the equipment weight in any direction and 1.5 times the equipment weight in the downward direction.

3.1.5.10 Directional Changes in Conduit Runs

Make changes in direction of runs with symmetrical bends or cast-metal fittings. Make field-made bends and offsets with hickey or conduit-bending machine. Do not install crushed or deformed conduits. Avoid trapped conduits. Prevent plaster, dirt, or trash from lodging in conduits, boxes, fittings, and equipment during construction. Free clogged conduits of obstructions.

3.1.5.11 Locknuts and Bushings

Fasten conduits to sheet metal boxes and cabinets with two locknuts where required by NFPA 70, where insulated bushings are used, and where bushings cannot be brought into firm contact with the box; otherwise, use at least minimum single locknut and bushing. Provide locknuts with sharp edges for digging into wall of metal enclosures. Install bushings on ends of conduits, and provide insulating type where required by NFPA 70.

3.1.5.12 Flexible Connections

Provide flexible steel conduit between 3 and 6 feet in length for recessed and semirecessed lighting fixtures; for equipment subject to vibration, noise transmission, or movement; and for motors. Install flexible conduit to allow 20 percent slack. Minimum flexible steel conduit size: 1/2 inch diameter. Provide liquidtight flexible conduit in wet and damp locations for equipment subject to vibration, noise transmission, movement or motors. Provide separate ground conductor across flexible connections.

3.1.6 Boxes, Outlets, and Supports

Provide boxes in wiring and raceway systems wherever required for pulling of wires, making connections, and mounting of devices or fixtures. Boxes for metallic raceways: cast-metal, hub-type when located in wet locations, when surface mounted on outside of exterior surfaces, when surface mounted on interior walls exposed up to 7 feet above floors and walkways, or when installed in hazardous areas and when specifically indicated. Boxes in other locations: sheet steel, except that aluminum boxes may be used with aluminum conduit, and nonmetallic boxes may be used with nonmetallic conduit system. Provide each box with volume required by NFPA 70 for number of conductors enclosed in box. Boxes for mounting lighting fixtures: minimum 4 inches square, or octagonal, except that smaller boxes may be installed as required by fixture configurations, as approved. Boxes for use in masonry-block or tile walls: square-cornered, tile-type, or standard boxes having square-cornered, tile-type covers. Provide gaskets for cast-metal boxes installed in wet locations and boxes installed flush

with outside of exterior surfaces. Provide separate boxes for flush or recessed fixtures when required by fixture terminal operating temperature; provide readily removable fixtures for access to boxes unless ceiling access panels are provided. Support boxes and pendants for surface-mounted fixtures on suspended ceilings independently of ceiling supports. Fasten boxes and supports with wood screws on wood, with bolts and expansion shields on concrete or brick, with toggle bolts on hollow masonry units, and with machine screws or welded studs on steel. Threaded studs driven in by powder charge and provided with lockwashers and nuts or nail-type nylon anchors may be used in lieu of wood screws, expansion shields, or machine screws. In open overhead spaces, cast boxes threaded to raceways need not be separately supported except where used for fixture support; support sheet metal boxes directly from building structure or by bar hangers. Where bar hangers are used, attach bar to raceways on opposite sides of box, and support raceway with approved-type fastener maximum 24 inches from box. When penetrating reinforced concrete members, avoid cutting reinforcing steel.

3.1.6.1 Boxes

Boxes for use with raceway systems: minimum 1 1/2 inches deep, except where shallower boxes required by structural conditions are approved. Boxes for other than lighting fixture outlets: minimum 4 inches square, except that 4 by 2 inch boxes may be used where only one raceway enters outlet. Mount outlet boxes flush in finished walls.

3.1.6.2 Pull Boxes

Construct of at least minimum size required by NFPA 70 of code-gauge aluminum or galvanized sheet steel, and compatible with nonmetallic raceway systems, except where cast-metal boxes are required in locations specified herein. Provide boxes with screw-fastened covers. Where several feeders pass through common pull box, tag feeders to indicate clearly electrical characteristics, circuit number, and panel designation.

3.1.7 Mounting Heights

Mount panelboards, motor controller and disconnecting switches so height of operating handle at its highest position is maximum 78 inches above floor. Mount lighting switches 48 inches above finished floor. Mount receptacles 24 inches above finished floor, unless otherwise indicated. Mount other devices as indicated. Measure mounting heights of wiring devices and outlets in non-hazardous areas to center of device or outlet. Measure mounting heights of receptacle outlet boxes in hazardous areas to the bottom of the outlet box.

3.1.8 Mineral Insulated, Metal Sheathed (Type MI) Cable Installation

Mineral-insulated, metal-sheathed cable system, Type MI, may be used in lieu of exposed conduit and wiring. Conductor sizes: not less than those indicated for the conduit installation. Fasten cables within 12 inches of each turn or offset and at 33 inches maximum intervals. Make cable terminations in accordance with NFPA 70 and cable manufacturer's recommendations. Terminate single-conductor cables of a circuit, having capacities of more than 50 amperes, in a single box or cabinet opening. Color code individual conductors in all outlets and cabinets.

3.1.9 Conductor Identification

Provide conductor identification within each enclosure where tap, splice, or termination is made. For conductors No. 6 AWG and smaller diameter, provide color coding by factory-applied, color-impregnated insulation. For conductors No. 4 AWG and larger diameter, provide color coding by plastic-coated, self-sticking markers; colored nylon cable ties and plates; or heat shrink-type sleeves.

3.1.9.1 Marking Strips

Provide marking strips in accordance with the following:

a. Provide white or other light-colored plastic marking strips, fastened by screws to each terminal block, for wire designations.

b. Use permanent ink for the wire numbers

c. Provide reversible marking strips to permit marking both sides, or provide two marking strips with each block.

d. Size marking strips to accommodate the two sets of wire numbers.

e. Assign a device designation in accordance with NEMA ICS 1 to each device to which a connection is made. Mark each device terminal to which a connection is made with a distinct terminal marking corresponding to the wire designation used on the Contractor's schematic and connection diagrams.

f. The wire (terminal point) designations used on the Contractor's wiring diagrams and printed on terminal block marking strips may be according to the Contractor's standard practice; however, provide additional wire and cable designations for identification of remote (external) circuits for the Government's wire designations.

g. Prints of the marking strips drawings submitted for approval will be so marked and returned to the Contractor for addition of the designations to the terminal strips and tracings, along with any rearrangement of points required.

3.1.10 Splices

Make splices in accessible locations. Make splices in conductors No. 10 AWG and smaller diameter with insulated, pressure-type connector. Make splices in conductors No. 8 AWG and larger diameter with solderless connector, and cover with insulation material equivalent to conductor insulation.

3.1.11 Covers and Device Plates

Install with edges in continuous contact with finished wall surfaces without use of mats or similar devices. Plaster fillings are not permitted. Install plates with alignment tolerance of 1/16 inch. Use of sectional-type device plates are not permitted. Provide gasket for plates installed in wet locations.

3.1.12 Grounding and Bonding

Provide in accordance with NFPA 70 and NFPA 780. Ground exposed,

non-current-carrying metallic parts of electrical equipment, metallic raceway systems, grounding conductor in metallic and nonmetallic raceways, and neutral conductor of wiring systems. Make ground connection to driven ground rods on exterior of building. Interconnect all grounding media in or on the structure to provide a common ground potential. This includes lightning protection, electrical service, as well as underground metallic piping systems. Make interconnection to the gas line on the customer's side of the meter. Use main size lightning conductors for interconnecting these grounding systems to the lightning protection system. Where ground fault protection is employed, ensure that connection of ground and neutral does not interfere with correct operation of fault protection.

3.1.12.1 Ground Rods

Provide cone pointed ground rods. Measure the resistance to ground using the fall-of-potential method described in IEEE 81. Do not exceed 25 ohms under normally dry conditions for the maximum resistance of a driven ground. If this resistance cannot be obtained with a single rod, additional rods, spaced on center, not less than twice the distance of the length of the rod. If the resultant resistance exceeds 25 ohms measured not less than 48 hours after rainfall, notify the Contracting Officer who will decide on the number of ground rods to add.

3.1.12.2 Grounding Connections

Make grounding connections which are buried or otherwise normally inaccessible, except specifically those connections for which access for periodic testing is required, by exothermic weld or compression connector.

a. Make compression connections using a hydraulic compression tool to provide the correct circumferential pressure. Provide tools and dies as recommended by the manufacturer. Use an embossing die code or other standard method to provide visible indication that a connector has been adequately compressed on the ground wire.

3.1.12.3 Ground Bus

Provide a copper ground bus in the electrical equipment rooms as indicated. Noncurrent-carrying metal parts of transformer neutrals and other electrical equipment: effectively grounded by bonding to the ground bus. Bond the ground bus to both the entrance ground, and to a ground rod or rods as specified above having the upper ends terminating approximately 4 inches above the floor. Make connections and splices of the brazed, welded, bolted, or pressure-connector type, except use pressure connectors or bolted connections for connections to removable equipment.

3.1.12.4 Resistance

Maximum resistance-to-ground of grounding system: do not exceed 5 ohms under dry conditions. Where resistance obtained exceeds 5 ohms, contact Contracting Officer for further instructions.

3.1.13 Equipment Connections

Provide power wiring for the connection of motors and control equipment under this section of the specification. Except as otherwise specifically noted or specified, automatic control wiring, control devices, and protective devices within the control circuitry are not included in this section of the specifications and are provided under the section specifying

the associated equipment.

3.1.14 Repair of Existing Work

Perform repair of existing work, demolition, and modification of existing electrical distribution systems as follows:

3.1.14.1 Workmanship

Lay out work in advance. Exercise care where cutting, channeling, chasing, or drilling of floors, walls, partitions, ceilings, or other surfaces is necessary for proper installation, support, or anchorage of conduit, raceways, or other electrical work. Repair damage to buildings, piping, and equipment using skilled craftsmen of trades involved.

3.1.14.2 Existing Concealed Wiring to be Removed

Disconnect existing concealed wiring to be removed from its source. Remove conductors; cut conduit flush with floor, underside of floor, and through walls; and seal openings.

3.1.14.3 Removal of Existing Electrical Distribution System

Removal of existing electrical distribution system equipment includes equipment's associated wiring, including conductors, cables, exposed conduit, surface metal raceways, boxes, and fittings, as indicated.

3.1.14.4 Continuation of Service

Maintain continuity of existing circuits of equipment to remain. Maintain existing circuits of equipment energized. Restore circuits wiring and power which are to remain but were disturbed during demolition back to original condition.

3.1.15 Surge Protective Devices

Connect the surge protective devices in parallel to the power source, keeping the conductors as short and straight as practically possible. Maximum allowed lead length is 3 feet.

3.2 FIELD FABRICATED NAMEPLATE MOUNTING

Provide number, location, and letter designation of nameplates as indicated. Fasten nameplates to the device with a minimum of two sheet-metal screws or two rivets.

3.3 WARNING SIGN MOUNTING

Provide the number of signs required to be readable from each accessible side. Space the signs in accordance with NFPA 70E.

3.4 FIELD APPLIED PAINTING

Paint electrical equipment as required to match finish of adjacent surfaces or to meet the indicated or specified safety criteria. Painting: as specified in Section 09 90 00 PAINTS AND COATINGS. Where field painting of enclosures for panelboards, load centers or the like is specified to match adjacent surfaces, to correct damage to the manufacturer's factory applied coatings, or to meet the indicated or specified safety criteria, provide

manufacturer's recommended coatings and apply in accordance to manufacturer's instructions.

3.5 FIELD QUALITY CONTROL

Furnish test equipment and personnel and submit written copies of test results. Give Contracting Officer 5 working days notice prior to each test.

3.5.1 Devices Subject to Manual Operation

Operate each device subject to manual operation at least five times, demonstrating satisfactory operation each time.

3.5.2 600-Volt Wiring Test

Test wiring rated 600 volt and less to verify that no short circuits or accidental grounds exist. Perform insulation resistance tests on wiring No. 6 AWG and larger diameter using instrument which applies voltage of approximately 500 volts to provide direct reading of resistance. Minimum resistance: 250,000 ohms.

3.5.3 Transformer Tests

Perform the standard, not optional, tests in accordance with the Inspection and Test Procedures for transformers, dry type, air-cooled, 600 volt and below; as specified in NETA ATS. Measure primary and secondary voltages for proper tap settings. Tests need not be performed by a recognized independent testing firm or independent electrical consulting firm.

3.5.4 Grounding System Test

Test grounding system to ensure continuity, and that resistance to ground is not excessive. Test each ground rod for resistance to ground before making connections to rod; tie grounding system together and test for resistance to ground. Make resistance measurements in dry weather, not earlier than 48 hours after rainfall. Submit written results of each test to Contracting Officer, and indicate location of rods as well as resistance and soil conditions at time measurements were made.

-- End of Section --

SECTION 26 27 14.00 20

ELECTRICITY METERING
02/11

PART 1 GENERAL

1.1 REFERENCES

The publications listed below form a part of this specification to the extent referenced. The publications are referred to within the text by the basic designation only.

INSTITUTE OF ELECTRICAL AND ELECTRONICS ENGINEERS (IEEE)

IEEE C2	(2012; Errata 2012; INT 1-4 2012; INT 5-6 2013) National Electrical Safety Code
IEEE C37.90.1	(2012) Standard for Surge Withstand Capability (SWC) Tests for Relays and Relay Systems Associated with Electric Power Apparatus
IEEE C57.13	(2008; INT 2009) Standard Requirements for Instrument Transformers
IEEE Stds Dictionary	(2009) IEEE Standards Dictionary: Glossary of Terms & Definitions

INTERNATIONAL ELECTRICAL TESTING ASSOCIATION (NETA)

NETA ATS	(2013) Standard for Acceptance Testing Specifications for Electrical Power Equipment and Systems

NATIONAL ELECTRICAL MANUFACTURERS ASSOCIATION (NEMA)

ANSI C12.1	(2008) Electric Meters Code for Electricity Metering
ANSI C12.18	(2006) Protocol Specification for ANSI Type 2 Optical Port
ANSI C12.20	(2010) Electricity Meters - 0.2 and 0.5 Accuracy Classes
ANSI C12.7	(2005) Requirements for Watthour Meter Sockets
NEMA C12.19	(2008) Utility Industry End Device Data Tables

NATIONAL FIRE PROTECTION ASSOCIATION (NFPA)

NFPA 70	(2014; AMD 1 2013; Errata 2013; AMD 2 2013) National Electrical Code

1.2 DEFINITIONS

Unless otherwise specified or indicated, electrical and electronics terms used in these specifications, and on the drawings, shall be as defined in IEEE Stds Dictionary.

1.3 SUBMITTALS

Government approval is required for submittals with a "G" designation; submittals not having a "G" designation are for Contractor Quality Control approval.

Technical data packages consisting of technical data and computer software (meaning technical data which relates to computer software) which are specifically identified in this project and which may be defined/required in other specifications shall be delivered strictly in accordance with the CONTRACT CLAUSES and in accordance with the Contract Data Requirements List, DD Form 1423. Data delivered shall be identified by reference to the particular specification paragraph against which it is furnished. All submittals not specified as technical data packages are considered 'shop drawings' under the Federal Acquisition Regulation Supplement (FARS) and shall contain no proprietary information and be delivered with unrestricted rights.

Submit the following in accordance with Section 01 33 00 SUBMITTAL PROCEDURES:

SD-02 Shop Drawings

Installation Drawings; G

SD-03 Product Data

Electricity meters; G

The most recent meter product data shall be submitted as a Technical Data Package and shall be licensed to the project site. Any software shall be submitted on CD-ROM and 2 hard copies of the software user manual shall be submitted for each piece of software provided.

Current transformer; G

Potential transformer; G

External communications devices; G

Configuration Software; G

The most recent version of the configuration software for each type (manufacturer and model) shall be submitted as a Technical Data Package and shall be licensed to the project site. Software shall be submitted on CD-ROM and 2 hard copies of the software user manual shall be submitted for each piece of software provided.

SD-06 Test Reports

Acceptance checks and tests; G

System functional verification; G

Contractor shall fill in the meter configuration template and submit to the Activity for concurrence.

Meter configuration report; G

The meter configuration report shall be submitted as a Technical Data Package.

Submit operation and maintenance data in accordance with Section 01 78 23 OPERATION AND MAINTENANCE DATA and as specified herein.

SD-11 Closeout Submittals

System functional verification; G

1.4 QUALITY ASSURANCE

1.4.1 Installation Drawings

Drawings shall be provided in hard-copy and electronic format, and shall include but not be limited to the following:

a. Wiring diagrams with terminals identified of kilowatt meter, current transformers, potential transformers, protocol modules, communications interfaces, and Ethernet connections.

b. One-line diagram, including meters, switch(es), current transformers, potential transformers, protocol modules, communications interfaces, Ethernet connections and fuses.

1.4.2 Standard Products

Provide materials and equipment that are products of manufacturers regularly engaged in the production of such products which are of equal material, design and workmanship. Products shall have been in satisfactory commercial or industrial use for 1 year prior to bid opening. The 1-year period shall include applications of equipment and materials under similar circumstances and of similar size. The product, or an earlier release of the product, shall have been on sale on the commercial market through advertisements, manufacturers catalogs, or brochures during the prior 1-year period. Where two or more items of the same class of equipment are required, these items shall be products of a single manufacturer; however, the component parts of the item need not be the products of the same manufacturer unless stated in this section.

1.4.3 Material and Equipment Manufacturing Data

Products manufactured more than 1 year prior to date of delivery to site shall not be used, unless specified otherwise.

1.5 MAINTENANCE

1.5.1 Additions to Operation and Maintenance Data

In addition to requirements of Data Package 5, include the following on the actual electricity meters and accessories provided:

a. A condensed description of how the system operates

b. Block diagram indicating major assemblies

c. Troubleshooting information

d. Preventive maintenance

e. Prices for spare parts and supply list

1.6 WARRANTY

The equipment items and software shall be supported by service organizations which are reasonably convenient to the equipment installation in order to render satisfactory service to the equipment and software on a regular and emergency basis during the warranty period of the contract.

1.7 SYSTEM DESCRIPTION

1.7.1 System Requirements

Electricity metering, consisting of meters and associated equipment, will be used to record the electricity consumption and other values as described in the requirements that follow and as shown on the drawings. Communication system requirements are contained in a separate specification section as identified in paragraph entitled "Communications Interfaces".

1.7.2 Selection Criteria

Metering components and software are part of a system that includes the physical meter, data recorder function and communications method. Every building site identified shall include sufficient metering components to measure the electrical parameters identified and to store and communicate the values as required.

Contractor shall verify that the metering system installed on any building site is compatible with the facility-wide or base-wide communication and meter reading protocol system.

PART 2 PRODUCTS

2.1 ELECTRICITY METERS AND ACCESSORIES

2.1.1 Physical and Common Requirements

a. Meter shall have NEMA 3R stainless steel enclosure for surface mounting with bottom or rear penetrations.

b. Surge withstand capability shall conform to IEEE C37.90.1.

c. Use #12 SIS (XHHW, or equivalent) wiring with ring lugs for all meter connections. Color code and mark the conductors as follows:

(1) Red - Phase A CT - C1
(2) Orange - Phase B CT - C2
(3) Brown - Phase C CT - C3
(4) Gray with white stripe - neutral current return - C0
(5) Black - Phase A voltage - V1
(6) Yellow - Phase B voltage - V2(7) Blue - Phase C voltage - V3

(8) White - Neutral voltage

2.1.2 Current Transformer Requirements

a. Current transformer shall be installed with a rating as shown in the schedule.

b. Current transformers shall have an Accuracy Class of 0.3 (with a maximum error of plus/minus 0.3 percent at 5.0 amperes) when operating within the specified rating factor.

c. Current transformers shall be solid-core, bracket-mounted for new installations using ring-tongue lugs for electrical connections. Current transformers shall be accessible and the associated wiring shall be installed in an organized and neat workmanship arrangement. Current transformers that are retrofitted onto existing switchgear busbar can be a busbar split-core design.

d. Current transformers shall have:

1. Insulation Class: All 600 volt and below current transformers shall be rated 10 KV BIL.

2. Frequency: Nominal 60 Hz.

3. Burden: Burden class shall be selected for the load.

4. Phase Angle Range: 0 to 60 degrees.

e. Meter shall accept current input from standard instrument transformers (5A secondary current transformers).

f. Current inputs shall have a continuous rating in accordance with IEEE C57.13.

g. Provide one single-ratio current transformer for each phase per power transformer with characteristics listed in the following table.

Single-Ratio Current Transformer Characteristics				
kVA	Sec. Volt	CT Ratio	RF	Meter Acc. Class
225	480Y/277	200/5	2.0	0.3 thru B0.01

2.1.3 Meter Requirements

Electricity meters shall include the following features:

a. Meter shall comply with ANSI C12.1, NEMA C12.19, and ANSI C12.20.

b. Meter sockets shall comply with ANSI C12.7.

c. Provide socket-mounted meter.

(1) Panel-mounted meters shall be semi-flush, back-connected, dustproof, draw-out switchboard type. Cases shall have window removable covers capable of being sealed against tampering.

Meters shall be of a type that can be withdrawn through approved sliding contacts from fronts of panels or doors without opening current-transformer secondary circuits, disturbing external circuits, or requiring disconnection of any meter leads. Necessary test devices shall be incorporated within each meter and shall provide means for testing either from an external source of electric power or from associated instrument transformers or bus voltage.

d. Meter shall be a Class 20, transformer rated design.

e. Meter shall be rated for use at temperature from minus 40 degrees Centigrade to plus 70 degrees Centigrade.

f. The meters shall have an electronic demand recording register and shall be secondary reading as indicated. The register shall be used to indicate maximum kilowatt demand as well as cumulative or continuously cumulative demand. Demand shall be measured on a block-interval basis and shall be capable of a 5 to 60 minute interval and initially set to a 15-minute interval. It shall have provisions to be programmed to calculate demand on a rolling interval basis. Meter readings shall be true RMS.

g. The meter electronic register shall be of modular design with non-volatile data storage. Downloading meter stored data shall be capable via an optical port. Recording capability of data storage with a minimum capability of 89 days of 15 minute, 2 channel interval data. The meter shall be capable of providing at least 2 KYZ pulse outputs (dry contacts). Default initial configuration (unless identified otherwise by base personnel) shall be:

(1) First channel - kWh
(2) Second channel - kVARh
(3) KYZ output #1 - kWh
(4) KYZ output #2 - kVARh

h. Enable switches for Time of Use (TOU), pulse and load profile measurement module at the factory.

i. Meter shall have an optical port on front of meter capable of speeds from 9600 to a minimum of 19.2k baud, and shall be initially set at 9600 baud. Optical device shall be compatible with ANSI C12.18.

j. Meters shall be 120-480 volts auto ranging.

k. Provide blank tag fixed to the meter faceplate for the addition of the meter multiplier, which will be the product of the current transformer ratio and will be filled in by base personnel on the job site. The meter's nameplate shall include:

(1) Meter ID number.
(2) Rated voltage.
(3) Current class.
(4) Metering form.
(5) Test amperes.
(6) Frequency.
(7) Catalog number.
(8) Manufacturing date.

l. On switchboard style installations, provide switchboard case with disconnect means for meter removal incorporating short-circuiting of current transformer circuits.

m. Meter covers shall be polycarbonate resins with an optical port and reset. Backup battery shall be easily accessible for change-out after removing the meter cover.

n. The normal billing data scroll shall be fully programmable. Data scroll display shall include the following.

(1) Number of demand resets.
(2) End-of-interval indication.
(3) Maximum demand.
(4) New maximum demand indication.
(5) Cumulative or continuously cumulative.
(6) Time remaining in interval.
(7) Kilowatt hours.

o. The register shall incorporate a built-in test mode that allows it to be tested without the loss of any data or parameters. The following quantities shall be available for display in the test mode:

(1) Present interval's accumulating demand.
(2) Maximum demand.
(3) Number of impulses being received by the register.

p. Pulse module simple I/O board with programmable ratio selection.

q. Meters shall be programmed after installation via an optical port. Optical display shall show TOU data, peak kWh, semi-peak kWh, off peak kWh, and phase angles.

r. Self-monitoring to provide for:

(1) Unprogrammed register.
(2) RAM checksum error.
(3) ROM checksum error.
(4) Hardware failure.
(5) Memory failure.
(6) EPROM error.
(7) Battery status (fault, condition, or time in service).

s. Liquid crystal alphanumeric displays, 9 digits, blinking squares confirm register operation. 6 Large digits for data and smaller digits for display identifier.

t. Display operations, programmable sequence with display identifiers. Display identifiers shall be selectable for each item. Continually sequence with time selectable for each item.

u. The meters shall support three modes of registers: Normal Mode, Alternate Mode, and Test Mode. The meter also shall support a "Toolbox" or "Service Information" (accessible in the field) through an optocom port to a separate computer using the supplied software to allow access to instantaneous service information such as voltage, current, power factor, load demand, and the phase angle for individual phases.

v. Meter shall have a standard 4-year warranty.

2.1.4 Disconnect Method

Provide a 10-pole safety disconnect complete with isolation devices for the voltage and current transformer inputs, including a shorting means for the current transformers.

2.1.5 Installation Methods

a. Transformer Mounted. Meter base shall be located outside on the secondary side of the pad-mounted transformer.

2.2 COMMUNICATIONS INTERFACES

Meter shall have two-way communication with the existing data acquisition system (DAS). Provide a communications interface utilizing Ethernet.

Provide interfacing software if a meter is used that is different than the existing meters at the Activity to ensure compatibility within the metering system.

PART 3 EXECUTION

3.1 INSTALLATION

Electrical installations shall conform to IEEE C2, NFPA 70 (National Electrical Code), and to the requirements specified herein. Provide new equipment and materials unless indicated or specified otherwise.

3.1.1 Configuration Software

The standard meter shall include the latest available version of firmware and software. Meter shall either be programmed at the factory or shall be programmed in the field. Meters shall have a password that shall be provided to the contracting officer upon project completion. When field programming is performed, turn field programming device over to the Contracting Officer at completion of project. When interfacing software is used for a meter that is different than the existing meters in use at the Activity, turn the software over to the Contracting Officer at completion of the project.

3.2 FIELD QUALITY CONTROL

Perform the following acceptance checks and tests on all installed meters.

3.2.1 Performance of Acceptance Checks and Tests

Perform in accordance with the manufacturer's recommendations and include the following visual and mechanical inspections and electrical tests, performed in accordance with NETA ATS.

a. Meter Assembly

1. Visual and mechanical inspection.

(a) Compare equipment nameplate data with specifications and approved shop drawings.

(b) Inspect physical and mechanical condition. Confirm the meter is firmly seated in the socket, the socket is not abnormally heated, the display is visible, and the ring and seal on the cover are intact.

(c) Inspect all electrical connections to ensure they are tight. For Class 200 services, verify tightness of the service conductor terminations for high resistance using low-resistance ohmmeter, or by verifying tightness of accessible bolted electrical connections by calibrated torque-wrench method.

(d) Record model number, serial number, firmware revision, software revision, and rated control voltage.

(e) Verify operation of display and indicating devices.

(f) Record password and user log-in for each meter.

(g) Verify grounding of metering enclosure.

(h) Set all required parameters including instrument transformer ratios, system type, frequency, power demand methods/intervals, and communications requirements. Verify that the CT ratio and the PT ratio are properly included in the meter multiplier or the programming of the meter. Confirm that the multiplier is provided on the meter face or on the meter.

2. Electrical tests.

(a) Apply voltage or current as appropriate to each analog input and verify correct measurement and indication.

(b) Confirm correct operation and setting of each auxiliary input/output feature including mechanical relay, digital, and analog.

(c) After initial system energization, confirm measurements and indications are consistent with loads present.

(d) Make note of, and report, any "Error-Code" or "Caution-Code" on the meter's display.

3. Provide meter configuration report.

b. Current Transformers

1. Visual and mechanical inspection.

(a) Compare equipment nameplate data with specification and approved shop drawings.

(b) Inspect physical and mechanical condition.

(c) Verify correct connection, including polarity.

(d) Inspect all electrical connections to ensure they are tight.

(e) Verify that required grounding and shorting connections provide good contact.

2. Electrical Tests.

   Verify proper operation by reviewing the meter configuration report.

3.2.2 System Functional Verification

Verify that the installed meters are working correctly in accordance with the meter configuration report:

a. The correct meter form is installed.

b. All voltage phases are present.

c. Phase rotation is correct.

d. Phase angles are correct.

e. The new meter accurately measures power magnitude and direction, and can communicate as required by paragraph entitled "Communications Interfaces".

-- End of Section --

SECTION 26 41 00.00 40

LIGHTNING PROTECTION SYSTEM
11/08

PART 1 GENERAL

1.1 REFERENCES

The publications listed below form a part of this specification to the extent referenced. The publications are referred to within the text by the basic designation only.

INSTITUTE OF ELECTRICAL AND ELECTRONICS ENGINEERS (IEEE)

IEEE 81	(2012) Guide for Measuring Earth Resistivity, Ground Impedance, and Earth Surface Potentials of a Ground System

NATIONAL FIRE PROTECTION ASSOCIATION (NFPA)

NFPA 70	(2014; AMD 1 2013; Errata 2013; AMD 2 2013) National Electrical Code
NFPA 780	(2014) Standard for the Installation of Lightning Protection Systems

UNDERWRITERS LABORATORIES (UL)

UL 467	(2007) Grounding and Bonding Equipment
UL 96	(2005; Reprint Sep 2013) Standard for Lightning Protection Components
UL 96A	(2007; Reprint Jul 2012) Standard for Installation Requirements for Lightning Protection Systems
UL Electrical Constructn	(2012) Electrical Construction Equipment Directory

1.2 RELATED REQUIREMENTS

Section 26 00 00.00 20 BASIC ELECTRICAL MATERIALS AND METHODS applies to this section with additions and modifications specified herein.

1.2.1 Verification of Dimensions

Contractor shall become familiar with all details of work, verify all dimensions in field, and shall advise Contracting Officer of any discrepancy before performing work. Make no departures without prior approval of Contracting Officer.

1.2.2 System Requirements

Materials shall consist of standard products of a manufacturer regularly engaged in production of lightning protection systems and manufacturer's latest UL approved design. Lightning protection system and materials shall

conform to NFPA 70, NFPA 780, UL 96 and UL 96A.

1.2.3 Lightning Protection System Installers Documentation

Provide documentation showing that the installer is certified with a commercial third-party inspection company whose sole work is lightning protection, or is a UL Listed Lightning Protection Installer. In either case, the documentation must show that they have completed and passed the requirements for certification or listing, and have a minimum of 2 years documented experience installing lightning protection systems for DoD projects of similar scope and complexity.

1.3 SUBMITTALS

Government approval is required for submittals with a "G" designation; submittals not having a "G" designation are for Contractor Quality Control approval. Submit the following in accordance with Section 01 33 00 SUBMITTAL PROCEDURES:

SD-02 Shop Drawings

Overall lightning protection system; G

Each major component; G

SD-03 Product Data

Submit manufacturer's catalog data for the following items:

Air Terminals
Main and Secondary Conductors
Ground Rods
Clamp-Type Connectors
Lightning Protection Components
Hardware
Accessories

SD-06 Test Reports

Grounding system test; G

Lightning protection system inspection; G

SD-07 Certificates

UL listing or label; G

Submit Certificates in accordance with paragraph entitled, "System Ratings," of this section.

1.4 QUALITY ASSURANCE

In each standard referred to herein, consider the advisory provisions to be mandatory, as though the word "shall" has been substituted for "should" wherever it appears. Interpret references in these standards to "authority having jurisdiction," or words of similar meaning, to mean Contracting Officer.

1.4.1 Installation Drawings

a. Submit installation shop drawing for the overall lightning protection system. Drawings shall include physical layout of the equipment, dimensions, mounting details, relationship to other parts of the work, and wiring diagram.

b. Submit detail drawings for each major component to include manufacturer's descriptive and technical literature, catalog cuts, and installation instructions.

1.4.2 UL Listing or Label

Submit proof of compliance. Label of or listing in UL Electrical Constructn is acceptable evidence. In lieu of label or listing, submit written certificate from an approved, nationally recognized testing organization equipped to perform such services, stating that items have been tested and conform to requirements and testing methods of Underwriters Laboratories.

1.5 SITE CONDITIONS

Contractor will become familiar with details of the work, verify dimensions in the field, and advise Contracting Officer of discrepancies before performing work. Deviations from contract drawings will not be made without prior approval of Contracting Officer.

PART 2 PRODUCTS

2.1 MATERIALS

Do not use a combination of materials that forms an electrolytic couple of such nature that corrosion is accelerated in presence of moisture unless moisture is permanently excluded from the junction of such metals. Where unusual conditions exist which would cause corrosion of conductors, provide conductors with protective coatings. Where a mechanical hazard is involved, or protect conductors by covering them with molding or tubing made of wood or nonmagnetic material. When metallic conduit or tubing is provided, electrically bond conductor to conduit or tubing at the upper and lower ends by clamp type connectors or welds (including exothermic).

Lightning protection equipment, Accessories, and Hardware shall conform to NFPA 70, NFPA 780, and UL 96.

2.1.1 Main and Bonding Conductors

NFPA 780 and UL 96 Class I materials as applicable.

Size of conductors shall not be less than specified in NFPA 780.

2.1.2 Copper

Provide copper main conductors that do not weigh less than 187 pounds per thousand feet, have a cross section area of not less than 57,400 circular mils and minimum strand size of not less than 17 AWG. Provide loop conductors that are comprised of copper conductors not smaller than No. 1/0 AWG.

2.2 COMPONENTS

2.2.1 Air Terminals

Provide terminals in accordance with UL 96, except provide Class II for Class I and Class II applications. Support air terminals more than 24 inches in length by suitable brace, with guides, not less than one-half the height of the terminal.

Air terminals shall be 1/2-inch diameter nickel-tipped copper with length and location as indicated. Fasten air terminals to a bronze connector with a male threaded stud on which the female threaded air-terminal shaft shall be mounted

Air terminals shall be not less than 10-inches high above the object to protect, tapered to a point. Separate points are not required on top of air terminals, but if used, the points shall be of substantial construction and securely attached by screw or slip joints. Air terminals more than 24-inches high shall be supported by a suitable brace with guide(s) not less than one-half the height of the air terminal.

2.2.2 Ground Rods

Provide ground rods made of copper-clad steel conforming to UL 467. Provide ground rods that are not less than 3/4 inch in diameter and 10 feet in length. Do not mix ground rods of copper-clad steel, stainless steel, galvanized ferrous, or solid copper on the same job.

2.2.3 Connections and Terminations

Provide connectors for splicing conductors that conform to UL 96, class as applicable. Conductor connections can be made by clamps or welds (including exothermic). Provide style and size connectors required for the installation.

2.2.4 Connector Fittings

Provide connector fittings for "end-to-end", "Tee", or "Y" splices that conform to NFPA 780.

2.2.5 Lightning Protection Components

Provide bonding plates, air terminal supports, chimney bands, clips, and fasteners that conform to UL 96 classes as applicable.

PART 3 EXECUTION

3.1 INTEGRAL SYSTEM

Lightning protection system consists of air terminals, roof conductors, down conductors, ground connections, grounding electrodes and ground loop conductor. Electrically interconnect lightning protection system to form the shortest distance to ground. Do not use nonconducting parts of the structure as part of the building's lightning protection system. Expose conductors on the structures except where conductors are required to be in protective sleeves. Interconnect secondary conductors with grounded metallic parts within the building. Make interconnections within side-flash distances at or above the level of the grounded metallic parts.

3.1.1 Air Terminals

Provide air terminal design and support conforming to NFPA 780. Rigidly connect terminals to, and make electrically continuous with, roof conductors by means of pressure connectors or crimped joints of T-shaped malleable metal. Provide pressure connector or crimped joint with a dowel or threaded fitting to connect ground rod conductor with air terminal. Set air terminals at ends of structures not more than 2 feet from ends of ridges and corners of roofs. Do not exceed 25 feet in spacing of 2 foot high or greater air terminals on ridges, parapets, and around perimeter of building with flat roofs or 20 feet in spacing of air terminals less than 2 feet high. When necessary to exceed this spacing, use taller air terminals and the rolling sphere method. On large flat, or gently sloping roofs, as defined in NFPA 780, place air terminals at points of the intersection of imaginary lines dividing the surface into rectangles having sides not exceeding 50 feet in length. Secure air terminals against overturning either by attachment to the object to be protected or by means of a substantial tripod or other braces which are permanently and rigidly attached to the building or structure. Metal projections and metal parts of buildings such as smokestacks and other metal objects that are at least 3/16 inch thick and that do not contain hazardous materials, need not be provided with air terminals. However, bond these metal objects to a lightning conductor through a metal conductor of the same unit weight per length as the main conductor. Where metal ventilators are installed, mount air terminals thereon, where practical. Bond air terminals, erected by necessity adjacent to a metal ventilator, to the ventilator near the top and bottom. Where metal ventilators are installed, mount air terminals thereon, where practicable. Any air terminal erected by necessity adjacent to a metal ventilator shall be bonded to the ventilator near the top and bottom. Where metal ventilators are installed with air terminals mounted thereon, the air terminal shall not be more than 24 inch away from the farther edge or corner. If the air terminal is farther than this distance, add an additional air terminal in order to meet this requirement. Where metal ventilators are installed with air terminals mounted adjacent, the air terminal shall not be more than 24 inches away from the farther edge or corner. If the air terminal is farther than this distance, add an additional air terminal in order to meet this requirement.

Air terminal tips on buildings used for manufacturing, processing, handling, or storing explosives, ammunition, or explosive ingredients shall be a minimum of 2 feet above the ridge parapet, ventilator or perimeter.

Air terminals shall be a minimum of 5 feet above the opening on open or hooded vents emitting explosive dusts or vapors under natural or forced draft.

Air terminals shall extend a minimum of 15 feet above vent opening on open stacks emitting explosive dusts, gases, or vapor under forced draft.

3.1.2 Roof Conductors

Connect roof conductors directly to the roof or ridge roll. Avoid sharp bends or turns in conductors. Do not make turns of less than 8 inches radius. Preserve horizontal or downward course on conductors. Rigidly fasten conductors every 3 feet along the roof and down the building to the ground. Rigidly connect metal ventilators to the roof conductor at three places. Make connections electrically continuous. Course roof conductors along contours of flat roofs, ridges, parapets, and edges; and where necessary, over flat surfaces, in such a way as to join each air terminal

to all the rest. Connect roof conductors surrounding tank tops, decks, flat surfaces, and flat roofs to form a closed loop.

3.1.3 Down Conductors

Make down conductors electrically continuous from air terminals and roof conductors to grounding electrodes. Course down conductors over outer extreme portions of the building, such as corners, with consideration given to location of ground connections and air terminals. Provide each building or structure not less than two down conductors located as widely separated as practicable, such as at diagonally opposite corners. Structures exceeding 250 feet in perimeter, provide at least one additional down conductor for each 100 feet of perimeter or fraction thereof. Provide enough conductors so that the average distance between them along the perimeter is not greater than 100 feet. Install additional down conductors when necessary to avoid "dead ends" or branch conductors ending at air terminals, except where the air terminal is on a roof below the main protected level and the "dead end" or branch conductor is less than 16 feet in length and maintains a horizontal or downward coursing. Equally and symmetrically spaced down conductors about the perimeter of the structure. Protect conductors where necessary, to prevent physical damage or displacement to the conductor.

3.1.4 Interconnection of Metallic Parts

Connect metal doors, windows, and gutters directly to ground or down conductors using not smaller than No. 6 copper conductor, or equivalent. Where there is probability of unusual wear, mechanical injury, or corrosion, provide conductors with greater electrical capacity than normal or protect the conductor. Provide mechanical ties or pressure connectors between grounds and metal doors and windows.

3.1.5 Ground Connections

Securely connect conductor forming continuations of down conductors from structure to grounding electrode in a manner to ensure electrical continuity between the two. Provide clamp type connections for continuation. Provide a ground connection for each down conductor. Attach down conductors to ground rods by welding (including exothermic), brazing, or clamping. Provide clamps suitable for direct burial. Protect ground connection from mechanical injury. Bond metal water pipes and other large underground metallic objects together with all grounding mediums. In making ground connections, take advantage of all permanently moist places where practicable, although avoid such places when area is wet with waste water that contains chemical substances, especially those corrosive to metal.

3.1.6 Grounding Electrodes

Provide grounding electrode for each down conductor. Extend driven ground rods into the existing undisturbed earth for a distance of not less 10 feet. Set ground rods not less than 2 feet nor more than 10 feet, from the structure. After the completed installation, measure the total resistance to ground using the fall-of-potential method described in IEEE 81. Maximum resistance of a driven ground rod shall be 10 ohms, under normally dry conditions. Use a ground loop when two of any three ground rods, driven not less than 10 feet into the ground, a minimum of 10 feet apart, and equally spaced around the perimeter, give a combined value exceeding 50 ohms immediately after having driven. For ground loop, provide continuous

No. 1/0 bare stranded copper cable or equivalent material having suitable resistance to corrosion. Lay ground loop around the perimeter of the structure in a trench not less than 30 inches below grade, at a distance not less than 2 feet nor more than 10 feet from the nearest point of the structure. Install a ground loop in earth undisturbed by excavation, not earth fill, and do not locate beneath roof overhang, or wholly under paved areas or roadways where rainfall cannot penetrate to keep soil moist in the vicinity of the cable. Make connections between ground conductors and grounds or ground loop, and between ground loop and grounds electrically continuous.

3.2 APPLICATIONS

3.2.1 Steel Frame Building

Make the steel framework of the building electrically continuous. Electrical continuity may be provided by bolting, riveting, or welding unless another specific method is indicated. Connect air terminals to the structural steel framework at the ridge. Provide short runs of conductors to join air terminals to the metal framework so that proper placing of air terminals is maintained. Separate down conductors from air terminals to ground connections are not required. Where water system enters the building, securely connect structural steel framework and water system at point of entrance by a ground connector. Make connections to pipes by means of ground clamps with lugs. Make connections to structural framework by means of nut and bolt or welding. Make connections between columns and ground connections at bottom of steel columns. Make ground connections to grounds or ground loop runs from not less than one-half of the columns distributed equally around perimeter of structure at intervals averaging not more than 60 feet. When no water system enter the structure, run ground connections from steel columns distributed equally around the perimeter of the structure at intervals averaging not more than 60 feet. Bond metal doors, windows, gutters, and similar metal installation to steel work of the building. Provide a grounding electrode for each ground connection.

3.3 INTERFACE WITH OTHER STRUCTURES

3.3.1 Interconnection of Metal Bodies

Protect metal bodies of conductance if not within the zone of protection of an air terminal. All metal bodies of conductance having an area of 400 square inches or greater or a volume of 1000 cubic inches or greater shall be bonded to the lightning protection system using main size conductors and a bonding plate having a surface contact area of not less than 3 square inches. Metal bodies of inductance shall be bonded at their closest point to the lightning protection system using secondary bonding conductors and fittings. A metal body that exceeds 5 feet in any dimension, that is situated wholly within a building, and that does not at any point come within 6 feet of a lightning conductor or metal connected thereto shall be independently grounded.

3.3.2 Fences

Except as specified below, metal fences that are electrically continuous with metal posts extending at least 2 feet into the ground require no additional grounding. Ground other fences on each side of every gate at gate posts, at corner posts, and at end posts. Bond gate to adjacent fence post utilizing flexible copper grounding braid with sufficient slack to

permit 180 degree opening of the gate. Provide flexible copper ground braid which has an ampacity equivalent to that of the fence ground wire specified herein. Provide ground rods every 1000 to 1500 feet for grounding fences when fences are located in isolated places, and every 500 to 750 feet when in proximity (100 feet or less) to public roads, highways, and buildings. Provide connection to ground from the post where it is metal and is electrically continuous with the fencing using removable ground clamps on the fence posts and split-bolt connectors suitable for dissimilar metals on the fence fabric and barbed wire. Make connections to ground from the horizontal metal strand using split-bolt connectors suitable for dissimilar metals on the fence fabric and barbed wire. Ground metal fences at or near points 150 feet on each side of medium and high voltage, (meaning in excess of 600 volts,) overhead line crossings.

3.3.3 Exterior Overhead Pipe Lines

Properly ground overhead pipes, conduits, and cable trays on the exterior of the building that enter a building, preferably to building grounds at points where pipes enter the building. Where a separate ground is provided, bond the pipes to the building ground at points where the pipes are closest to the ground connections. In addition, bond pipes to any metallic masses that are within 6 feet of the pipe.

3.4 RESTORATION

Where sod has been removed, place sod as soon as possible after completing the backfilling. Restore to original condition the areas disturbed by trenching, storing of dirt, cable laying, and other work. Include necessary topsoiling, fertilizing, liming, seeding, sodding, sprigging or mulching in any restoration. Maintain disturbed surfaces and replacements until final acceptance.

3.5 FIELD QUALITY CONTROL

3.5.1 Grounding System Test

Test the grounding system to ensure continuity and that resistance to ground is not in excess of 10 ohms. Test the ground rod for resistance to ground before making connections to the rod. Tie the grounding system together and test for resistance to ground. Make resistance measurements in dry weather, not earlier than 48 hours after rainfall. Include in the written report: locations of ground rods, resistance, and soil conditions at the time that measurements were made. Submit results of each test to the Contracting Officer.

3.5.2 Lightning Protection System Inspection

Make visual inspections to verify that there are no loose connections which may result in high resistance joints, and that conductors and system components are securely fastened to their mounting surfaces and are protected against accidental mechanical displacement.

3.5.3 SYSTEM RATINGS

Submit certificates showing compliance with UL requirements for "Master Label" ratings.

Lightning-protection systems conforming to the installation requirements of UL 96A shall be qualified for a UL "Master Label" rating. Installed

lightning-protection system shall be inspected and approved by a certified UL inspector.

3.6 INSPECTION

The lightning protection system will be inspected by the Contracting Officer to determine conformance with the requirements of this specification. No part of the system shall be concealed until so authorized by the Contracting Officer.

-- End of Section --

SECTION 26 42 13.00 20

CATHODIC PROTECTION BY GALVANIC ANODES
04/06

PART 1 GENERAL

1.1 REFERENCES

The publications listed below form a part of this specification to the extent referenced. The publications are referred to within the text by the basic designation only.

ASTM INTERNATIONAL (ASTM)

ASTM B3	(2013) Standard Specification for Soft or Annealed Copper Wire
ASTM B8	(2011) Standard Specification for Concentric-Lay-Stranded Copper Conductors, Hard, Medium-Hard, or Soft
ASTM B843	(2013) Standard Specification for Magnesium Alloy Anodes for Cathodic Protection

NACE INTERNATIONAL (NACE)

NACE SP0169	(2013) Control of External Corrosion on Underground or Submerged Metallic Piping Systems

NATIONAL ELECTRICAL MANUFACTURERS ASSOCIATION (NEMA)

NEMA ICS 6	(1993; R 2011) Enclosures

NATIONAL FIRE PROTECTION ASSOCIATION (NFPA)

NFPA 70	(2014; AMD 1 2013; Errata 1 2013; AMD 2 2013; Errata 2 2013) National Electrical Code

U.S. DEPARTMENT OF DEFENSE (DOD)

MIL-I-1361	(1985; Rev C; Notice 1 1991) Instrument Auxiliaries, Electrical Measuring: Shunts, Resistors and Transformers

UNDERWRITERS LABORATORIES (UL)

UL 44	(2010) Thermoset-Insulated Wires and Cables
UL 486A-486B	(2013; Reprint Dec 2013) Wire Connectors

1.2 SUBMITTALS

Government approval is required for submittals with a "G" designation; submittals not having a "G" designation are for Contractor Quality Control

approval. The following shall be submitted in accordance with Section 01 33 00 SUBMITTAL PROCEDURES:

SD-02 Shop Drawings

Test Stations

SD-03 Product Data

Anodes; G

Wires

Cable and wire

Shunt resistors

Permanent reference electrodes; G

SD-07 Certificates

Qualifications of Corrosion Engineer; G

SD-10 Operation and Maintenance Data

Cathodic Protection System, Data Package 5; G

Submit in accordance with Section 01 78 23 OPERATION AND MAINTENANCE DATA.

SD-11, Closeout Submittals

Initial Cathodic Protection System Field Test Report; G

One Year Warranty Period Cathodic Protection System Field Test Report; G

Final Cathodic Protection System Field Test Report; G

1.3 Services of Corrosion Professional

The Contractor shall obtain the services of a corrosion professional to supervise, inspect and test the installation of the cathodic protection system(s). Corrosion professional refers to a registered professional engineer with certification of licensing that includes education and experience in cathodic protection of buried or submerged metal structures, or a person accredited or certified by NACE International at the level of Corrosion Specialist, Cathodic Protection Specialist or CP Technologist. Such a person shall have not less than five years experience in the cathodic protection of underground submerged structures. The contractor shall submit evidence of the qualifications of corrosion engineer to the Contracting Officer for review and approval.

PART 2 PRODUCTS

2.1 ANODES

2.1.1 Magnesium

ASTM B843 Chemical composition as follows:

Aluminum	0.01 percent maximum
Manganese	0.5 to 1.3 percent
Zinc	0 percent
Silicon	0 percent
Copper	0.02 percent maximum
Nickel	0.001 percent maximum
Iron	0.03 percent maximum
Other Impurities	0.05 percent each, 0.3 percent maximum total
Magnesium	Remainder

a. Bare anode weight: 20 pounds not including core.

2.1.2 Anode Wires and Core

2.1.2.1 Anode Lead Wires

UL 44, Type RHW, stranded copper conductors, not less than 10 AWG, of sufficient length to extend to the accompanying test station without splicing. Anode lead wire shall be factory installed. Silver solder the lead wire to the anode core, and seal the soldered connection and recessed end of the anode with an asphaltic dielectric sealing compound. Dielectric material shall extend past the connection and cover the lead wire insulation by not less than 1/2 inch.

2.1.3 Anode Backfill

Chemical composition as follows:

Hydrated gypsum:	75 percent
Bentonite clay:	20 percent
Sodium sulfate:	5 percent

Provide granular backfill with 100 percent passing through a 100 mesh screen. Provide prepackaged anode in a cloth bag containing the anode and backfill. Center the anode in the firmly packed backfill using spacers. Overall dimensions of the bagged 20 pound anode shall be 6 by 64 inches with a total minimum weight of 80 pounds nominal.

2.2 TEST STATIONS

2.2.1 Post Top Mounted Type

NEMA ICS 6. Non-metallic with terminal board, 8 terminal posts and lockable lid. A non-metallic enclosure shall be high impact strength molded plastic. The unit shall be of standard design, manufactured for use as a cathodic protection test station, complete with cover, terminal board, shunts, and brass or Type 316 stainless steel hardware. The terminal board shall be removable for easy access to wires. The test station shall be mounted atop 6 foot long polyethylene conduit with anchor.

2.3 Shunt Resistors

MIL-I-1361. 0.01 ohm, 8 ampere, accuracy plus or minus one percent, manganin wire type.

2.4 PERMANENT REFERENCE ELECTRODES

Permanent reference electrodes shall be copper copper-sulfate specifically manufactured for underground use, 1 1/4 inch diameter, by 10 inches long, plastic tube with an ion trap to minimize contamination of the cell. Provide cells with No. 14 AWG, RHW cable of sufficient length to extend to the test station without splicing. Reference electrodes shall have a minimum 15 year life, stability of plus or minus 5 millivolts under 3 microamp load, and an initial accuracy of plus or minus 10 millivolts referenced to a calibrated portable reference electrode.

2.5 CABLE AND WIRE OTHER THAN ANODE LEAD WIRES

UL 44, Type RHW, stranded copper conductor, color coded and sized (based on AWG). Copper wires shall conform to ASTM B3 and ASTM B8. Refer to paragraph 2.1.4 for anode lead wires.

2.6 WIRE CONNECTORS

UL 486A-486B. Solderless copper lugs.

2.7 CONDUIT

2.7.1 Buried Cable Warning and Identification Tape

Polyethylene tape, manufactured for warning and identification of buried cable and conduit. Tape shall be 3 inches wide, Yellow in color and read "Caution Buried Cable Below" or similar. Color and lettering shall be permanent and unaffected by moisture or other substances in backfill materials.

2.8 EXOTHERMIC WELD KITS

Exothermic weld kits specifically designed by the manufacturer for welding the types of materials and shapes provided.

PART 3 EXECUTION

3.1 INSTALLATION

NFPA 70.

3.1.1 Anodes and Lead Wires

Provide each anode and lead wires as follows:

a. Excavate hole to a minimum 3 inches larger than the packaged anode diameter, pipe springline depth.

b. Excavate lead wire trench to 24 inches deep, 6 inches wide.

c. Do not lift or support anode by the lead wire. Where applicable, remove manufacturer's plastic wrap/bag from the anode. Exercise care to preclude damaging the cloth bag and the lead wire insulation.

d. Center the packaged anode in the hole with native soil in layers not exceeding 6 inches. Hand tamp each layer to remove voids taking care not to strike the anode lead wire. When the backfill is 6 inches above the top of the anode, pour not less than ten gallons of water into the hole to saturate the anode backfill and surrounding soil. Anodes shall not be backfilled prior to inspection and approval by the Contracting Officer.

e. Cover the lead wire trench bottom with a 3 inch layer of sand or stone free earth. Center wire on the backfill layer, do not stretch or kink the conductor. Place backfill over wire in layers not exceeding six inches deep, compact each layer thoroughly. Do not place tree roots, wood scrap, vegetable matter and refuse in backfill. Place cable warning tape within 18 inches of finished grade, above cable and conduit.

f. Connect anode lead wire(s) to the test station terminal board(s). Allow sufficient slack in the lead wire to compensate for movement during backfilling operation.

g. Connect structure leads to structure by use of exothermic weld kit(s). Clean the structure surface by scraping, filing or wire brushing to produce a clean, bright surface. Weld connections using exothermic kit(s) in accordance with the kit manufacturer's instructions. Conform to the safety precautions of paragraph 3.1.2 when welding around fuel facilities. Check and verify adherence of the bond to the substrate for mechanical integrity by striking the weld with a 2 pound hammer. Cover connections with an electrically insulating coating which is compatible with the existing coating on the structure. Connect structure lead wires to the test station terminal board(s).

3.1.2 Safety Precautions For Welding Around Fuel Facilities

Contractor shall take proper safety precautions prior to and during welding to live fuel pipelines. Contractor shall notify the activity Fuel Office via the Contracting Officer a minimum of three days before performing exothermic welding to live fuel lines. Exothermic welding shall be conducted with fuel flowing through the pipeline to eliminate vapor spaces within the pipe and to dissipate the heat on the pipe. Exothermic weld charges for connections to fuel lines shall be limited to a maximum 15 gram charge to prevent burning through the pipe wall. Exothermic weld connections shall be spaced a minimum of 6 inches apart. In the event of an unsuccessful weld, the new weld location shall be located a minimum of 6 inches from the unsuccessful weld and any other existing welds. Contractor shall obtain the services of a certified Marine Chemist or Certified Industrial Hygienist to approve the contractor's exothermic welding safety

procedures. Results of this consultation shall be included in the Contractor's Daily Report.

3.1.3 Test Stations and Permanent Reference Electrodes

Provide test stations and permanent reference electrodes as indicated.

Do not fill the bottom of the test station with concrete unless otherwise specified. Do not place rubbish, scrap or other debris into the test station.

3.1.3.1 Permanent Reference Electrode Calibration and Installation

Provide copper copper-sulfate reference electrode(s) as indicated in the drawings. Prior to installation, soak the reference electrode in a container of potable water for 30 minutes. Do not use seawater. Calibrate the permanent reference electrode in the presence of the contracting officer or his approved representative by measuring the potential difference between the permanent reference electrode and an independent (portable) calibrated reference electrode placed in the water adjacent to the permanent reference electrode. Potential differences between the two electrodes of the same generic type should not exceed 15 millivolts when the two electrodes being compared are not more than 1/6 inch apart but not touching. Permanent reference electrodes not within these potential differences shall be removed from the construction site by the end of the day and replaced at the contractor's expense. The testing provision shall also apply to replacement reference electrodes as well.

3.2 FIELD QUALITY CONTROL

Field tests shall be witnessed by the Contracting Officer or his designated representative. Advise the Contracting Officer 5 days prior to performing each field test. Quality control for the cathodic protection system shall consist of the following:

a. Initial field testing by the contractor upon construction.

b. Government Field Testing after Contractor initial field test report submission.

c. Warranty period field testing by the Contractor.

d. Final field testing by the contractor after one year of service.

3.2.1 Testing

3.2.1.1 Initial Cathodic Protection System Field Testing

Systems shall be tested and inspected by the Contractor's corrosion professional in the presence of the Contracting Officer's corrosion protection engineer or an approved representative. Record test data, including date, time, and locations of testing and submit report to the Contracting Officer. Contractor shall correct and retest, at his expense, deficiencies in the materials and installation observed by these tests and inspections. Testing shall include the following measurements.

a. Base potential tests: At least 24 hours after backfilling of the pipe and installation of the anodes, but before connection of anodes to the structure, measure base (native) structure-to-electrolyte potentials of

the pipe. Perform measurements at test stations and other locations suitable for test purposes (such as service risers or valves). The locations of these measurements shall be identical to the locations specified for potential measurements with anodes connected. Use the same measuring equipment that is specified for measuring protected potential measurements.

3.2.1.2 Initial Cathodic Protection System Field Test Report

The contractor shall submit a field test report of the cathodic protection system. All structure-to-electrolyte measurements, including initial potentials and anode outputs, shall be recorded on applicable forms. Identification of test locations, test station and anode test stations shall coordinate with the as-built drawings and be provided on system drawings included in the report. The contractor shall locate, correct, and report to the Contracting Officer any short circuits encountered during the checkout of the installed cathodic protection system.

3.2.1.3 Government Field Testing

The government corrosion engineer, NAVFAC LANT Code 404 shall review the Contractor's initial field testing report. Approximately four weeks after receipt of the Contractor's initial test report, the system will be tested and inspected in the Contractor's presence by the government corrosion engineer, NAVFAC LANT Code 404. The Contractor shall correct, at his expense, materials and installations observed by these tests and inspections to not be in conformance with the plans and specifications. The Contractor shall pay for all retesting done by the government engineer made necessary by the correction of deficiencies.

3.2.1.4 One Year Warranty Period Testing

The Contractor shall inspect, test, and adjust the cathodic protection system semi-annually for one year, 2 interim inspections total, to ensure its continued conformance with the criteria outlined below. The performance period for these tests shall commence upon the completion of all cathodic protection work, including changes required to correct deficiencies identified during initial testing, and preliminary acceptance of the cathodic protection system by the Contracting Officer. Copies of the One Year Warranty Period Cathodic Protection System Field Test Report, including field data, and certified by the Contractor's corrosion professional shall be submitted to the Contracting Officer, the activity, and the geographic Engineering Field Division corrosion engineer, NAVFAC LANT Code 404 protection program manager, NAVFAC LANT Code 1614C.

3.2.1.5 Final Field Testing

Conduct final field testing of the cathodic protection system utilizing the same procedures specified under, "Initial Field Testing of the Galvanic Cathodic Protection Systems". The Contractor shall inspect, test, and adjust the cathodic protection system after one year of operation to ensure its continued conformance with the criteria outlined below. The performance period for these tests shall commence upon preliminary acceptance for the cathodic protection system by the Contracting Officer. Copies of the Final Cathodic Protection System Field Test Report, certified by the Contractor's corrosion professional shall be submitted to the Contracting Officer and the geographic Engineering Field Division corrosion engineer, NAVFAC LANT Code 404 for approval, and as an attachment to the operation and maintenance manual in accordance with Section 01 78 23

OPERATION AND MAINTENANCE DATA.

3.2.2 Criteria for Cathodic Protection

Conduct in accordance with NACE SP0169. Criteria for determining the adequacy of protection shall be selected by the corrosion professional as applicable:

a. A negative voltage of at least 0.85 volt (850 millivolts) as measured between the structure surface and a saturated copper- copper sulfate reference electrode contacting the earth electrolyte. Determination of this voltage is to be made with the protective current applied to the pipeline for a minimum of 72 hours. Voltage drops must be considered for valid interpretation of this voltage measurement. The method of voltage drop consideration shall be identified by the Contractor's corrosion professional and approved by the Government corrosion engineer.

b. A negative polarized potential of at least 0.85 volt (850 millivolts) as measured between the structure surface and a saturated copper-copper sulfate reference electrode contacting the earth electrolyte. Determination of this voltage is to be made after the protective current has been applied to the pipeline for a minimum of 72 hours.

c. A minimum polarization voltage shift of 100 mV measured between the structure surface and a saturated copper-copper sulfate reference electrode contacting the earth electrolyte. This voltage shift shall be determined by interrupting the protective current and measuring the polarization decay. At the instant the protective current is interrupted ("instant off"), an immediate voltage shift will occur. The voltage reading just after the immediate shift shall be used as the base reading from which to measure the polarization decay. The polarization decay shall be the difference between the base reading.

3.3 DEMONSTRATION

3.3.1 Instructing Government Personnel

During the warranty testing and at a time designated by the Contracting Officer, make available the services of a technician regularly employed or authorized by the manufacturer of the Cathodic Protection System for instructing Government personnel in the proper operation, maintenance, safety, and emergency procedures of the Cathodic Protection System. Conduct the training at the jobsite or at another location mutually satisfactory to the Government and the Contractor. The field instructions shall cover all of the items contained in the operation and maintenance manual.

-- End of Section --

SECTION 26 51 00.00 40

INTERIOR LIGHTING
02/11

PART 1 GENERAL

1.1 REFERENCES

The publications listed below form a part of this specification to the extent referenced. The publications are referred to in the text by the basic designation only.

ILLUMINATING ENGINEERING SOCIETY OF NORTH AMERICA (IES)

IES HB-10	(2011) IES Lighting Handbook
IES LM-79	(2008) Electrical and Photometric Measurements of Solid-State Lighting Products
IES LM-80	(2008) Measuring Lumen Maintenance of LED Light Sources

INSTITUTE OF ELECTRICAL AND ELECTRONICS ENGINEERS (IEEE)

IEEE C2	(2012; Errata 2012; INT 1 2012; INT 2 2012) National Electrical Safety Code
IEEE Stds Dictionary	(2009) IEEE Standards Dictionary: Glossary of Terms & Definitions

NATIONAL ELECTRICAL MANUFACTURERS ASSOCIATION (NEMA)

NEMA 250	(2008) Enclosures for Electrical Equipment (1000 Volts Maximum)

NATIONAL FIRE PROTECTION ASSOCIATION (NFPA)

NFPA 70	(2011; Errata 2 2012) National Electrical Code

UNDERWRITERS LABORATORIES (UL)

UL 1598	(2008; Rev thru Jan 2010) Luminaires
UL 844	(2006; Reprint Sep 2011) Standard for Luminaires for Use in Hazardous (Classified) Locations
UL 8750	(2007; Reprint Nov 2011) UL Standard for Safety Light Emitting Diode (LED) Equipment for Use in Lighting Products

1.2 DEFINITIONS

a. Unless otherwise specified or indicated, electrical and electronics terms used in these specifications, and on the drawings, are as defined

in IEEE Stds Dictionary.

b. Useful Life is the operating hours before reaching 70 percent of the initial rated lumen output point with no catastrophic failures under normal conditions.

c. Total harmonic distortion (THD) is the root mean square (RMS) of all the harmonic components divided by the total fundamental current.

1.3 SUBMITTALS

Government approval is required for submittals with a "G" designation; submittals not having a "G" designation are for information only or as otherwise designated. Submit the following in accordance with Section 01 33 00 SUBMITTAL PROCEDURES:

Employ the terminology, classifications, and methods prescribed by the IES HB-10, as applicable, for the lighting system specified in data, drawings, and reports.

SD-02 Shop Drawings

Luminaire Drawings; G

SD-03 Product Data

Local/Regional Materials

LED (Light Emitting Diode) Light Fixtures; G

Driver; G

Energy Efficiency

SD-06 Test Reports

IES LM-79; G

IES LM-80; G

SD-07 Certificates

Fixture Useful Life Certificate; G

SD-10 Operation and Maintenance Data

Lighting Control System

Submit operation and maintenance data in accordance with Section 01 78 23 OPERATION AND MAINTENANCE DATA and as specified herein, showing all light fixtures, control modules, control zones, occupancy sensors, power packs, schematic diagrams and all interconnecting control wire, conduit, and associated hardware.

Operational Service

Submit documentation that includes contact information, summary of procedures, and the limitations and conditions applicable to the project. Indicate manufacturer's commitment to reclaim materials

for recycling and/or reuse.

1.4 QUALITY ASSURANCE

1.4.1 Luminaire Drawings

Include dimensions, accessories, and installation and construction details. Photometric data, including zonal lumen data, average and minimum ratio, and candlepower distribution data shall accompany shop drawings.

1.4.2 Regulatory Requirements

In each of the publications referred to herein, consider the advisory provisions to be mandatory, as though the word, "shall" had been substituted for "should" wherever it appears. Interpret references in these publications to the "authority having jurisdiction," or words of similar meaning, to mean the Contracting Officer. Equipment, materials, installation, and workmanship shall be in accordance with the mandatory and advisory provisions of NFPA 70 unless more stringent requirements are specified or indicated.

1.4.3 Standards Products

Provide materials and equipment that are products of manufacturers regularly engaged in the production of such products which are of equal material, design and workmanship. Products shall have been in satisfactory commercial or industrial use for 2 years prior to bid opening. The 2-year period shall include applications of equipment and materials under similar circumstances and of similar size. The product shall have been on sale on the commercial market through advertisements, manufacturers' catalogs, or brochures during the 2-year period. Where two or more items of the same class of equipment are required, these items shall be products of a single manufacturer; however, the component parts of the item need not be the products of the same manufacturer unless stated in this section.

1.4.3.1 Alternative Qualifications

Products having less than a 2-year field service record will be acceptable if a certified record of satisfactory field operation for not less than 6,000 hours, exclusive of the manufacturers' factory or laboratory tests, is furnished.

1.4.3.2 Material and Equipment Manufacturing Date

Products manufactured more than 1 year prior to date of delivery to site shall not be used, unless specified otherwise.

1.5 WARRANTY

Support the equipment items with service organizations which are reasonably convenient to the equipment installation in order to render satisfactory service to the equipment on a regular and emergency basis during the warranty period of the contract.

LED luminaires, diodes and drivers shall be warranted for 5 years. In the event of a warranty claim, the Contractor shall replace any and all defective parts at no cost to the owner, including both materials and the cost of labor.

Warranty period must begin on date of beneficial occupancy. Contractor shall provide the Contracting Officer signed warranty certificates prior to final payment.

1.6 OPERATIONAL SERVICE

Coordinate with manufacturer for maintenance agreement for services which reclaim materials for recycling and/or reuse. Collect information from the manufacturer about maintenance agreement options, and submit to Contracting Officer. Placement into landfills or burning of reclaimed materials is not allowed. Indicate procedures for compliance with regulations governing disposal of mercury. When such a service is not available, seek out local recyclers to reclaim the materials.

1.7 SUSTAINABLE DESIGN REQUIREMENTS

1.7.1 Local/Regional Materials

Use materials or products extracted, harvested, or recovered, as well as manufactured, within a 2,000 mile radius from the project site, if available from a minimum of three sources.

1.7.2 Energy Efficiency

Comply with National Energy Policy Act and Energy Star requirements for lighting products. Submit data indicating lumens per watt efficiency and color rendition index of light source.

PART 2 PRODUCTS

2.1 PRODUCT STANDARDS

Provide fixtures conforming to UL 1598. Provide fixtures in hazardous areas conforming to UL 844.

Furnish fixtures completely assembled with wiring and mounting devices and ready for installation at the locations noted. Design and equip recessed fixtures in suspended ceilings for installation in the type of ceiling in which the fixture is to be installed. Design fixtures to be supported independent of the ceiling. Equip fixtures with the lamps required.

Provide luminaires complete LED light source and power supply unit. Details, shapes, and dimensions are indicative of the general type desired, but are not intended to restrict selection to luminaires of a particular manufacturer. Luminaires of similar designs, light distribution and brightness characteristics, and of equal finish and quality will be acceptable as approved.

2.2 LED (LIGHT EMITTING DIODE) LIGHT FIXTURES

Provide LED fixtures, conforming to UL 1598 and UL 8750.

2.2.1 LED Lighting

Provide electronic drivers and fixtures, meeting as a minimum, the following characteristics:

a. LED lighting assemblies shall consist of light emitting diode, driver suitable for use on 120V, 60 Hz power supply, and surrounding materials

of optical (lensing) and thermal (heat sink) control and power supply.

b. Luminaires shall be fully assembled and electrically tested prior to shipment from factory.

c. All products associated with installation and control of the LED system as part of a common type, including peripheral devices, power/data, diodes and software shall be provided by a single manufacturer to ensure compatibility and color consistency.

d. LED luminaire shall be UL listed and appropriately classified for conditions of environment to be located.

e. Color of the luminaire shall be gray unless specified otherwise.

f. At least 80 percent of the luminaire material by weight shall be recyclable at the manufacturer's stated end of life.

g. Luminaires shall incorporate modular electrical connections and be constructed to allow replacement of all or part of the optics, heat sinks, power supply units, and electrical components using only a simple tool, such as a screwdriver.

h. Luminaire shall have a nameplate bearing the manufacturer's name, address, model number, date of manufacture, and serial number securely affixed in a conspicuous place; the nameplate of the distributing agent will not be acceptable.

2.2.2 Light Emitting Diodes

a. Nominal Manufacturer Rated Current: 350 mA (minimum).

b. Flux: Rated at 50 lumen minimum at manufacturer's nominal rated current.

c. Efficacy: 70 lumens per watt (minimum).

d. Correlated Color Temperature (CCT) shall be in accordance with ANSI C78.377.

1. Nominal CCT: 4000 K: 3985 plus or minus 275 K

e. Color Rendering Index (CRI) shall be:

1. Greater than or equal to 80 for 3000 K - 3500 K

f. Lumen Maintenance: Shall meet or exceed 50,000 hours as defined by LM-80-08 based on both the ambient temperature listed and the LEDs B10L70 performance curve as published by the LED lamp manufacturer.

g. Operating Temperature: minus 30 degrees C to plus 40 degrees C.

h. High power LED luminaire shall be thermally protected using one or more of the following thermal management techniques: metal core board, gap pad, and/or internal monitoring firmware.

2.2.3 Driver

Driver shall be constructed as follows:

a. Housing suitable for installed environment.

b. Rated to operate between ambient temperature of minus 30 degrees C to plus 40 degrees C.

c. Digitally driven to operate LEDs at constant regulated current levels. LEDs shall not be overdriven beyond specified nominal voltage and current.

d. Designed to operate on voltage system to which they are connected.

e. Have reverse polarity protection, open circuit protection and require no minimum load.

f. Minimum efficiency of 85 percent.

2.2.4 Power Supply

a. Frequency: 60 Hz.

b. Voltage: 120 V.

c. Power Factor: 0.90 or greater.

d. Total Harmonic Distortion: Less than 20 percent.

e. Sound Rating: Class A.

f. Operating Temperature: minus 30 degrees C to 40 degrees C.

g. Efficiency: 85 percent or greater.

h. Outputs shall have current limiting protection.

i. Connections shall be conduit-ready or clamp-style connects for low-voltage wiring.

2.3 RECESS- AND FLUSH-MOUNTED FIXTURES

Provide type that can be relamped from the bottom, with access to ballast from the bottom, with trim for the exposed surface of flush-mounted fixtures as indicated.

2.4 FIXTURES FOR HAZARDOUS LOCATIONS

In addition to requirements stated herein, provide LED fixtures for hazardous locations which conform to UL 844 or which have Factory Mutual certification for the class and division indicated. Provide fixtures also conforming to UL 1598 for marine environments as indicated.

2.5 EQUIPMENT IDENTIFICATION

2.5.1 Manufacturer's Nameplate

Provide each item of equipment with a nameplate bearing the manufacturer's name, address, model number, and serial number securely affixed in a conspicuous place; the nameplate of the distributing agent will not be acceptable.

2.5.2 Labels

Provide labeled luminaires in accordance with UL 1598 requirements. Clearly mark all for operation of specific lamps and ballasts according to proper lamp type. Note the following lamp characteristics in the format "Use Only _____":

a. Lamp type, wattage, and coating (clear or coated).

b. Correlated color temperature (CCT) and color rendering index (CRI) for all luminaires.

Provide all markings related to lamp type clear and located to be readily visible to service personnel, but unseen from normal viewing angles when lamps are in place. Provide ballasts with clear markings indicating multi-level outputs and indicate proper terminals for the various outputs.

2.6 FACTORY APPLIED FINISH

Provide electrical equipment with factory-applied painting systems which , as a minimum, meet the requirements of NEMA 250 corrosion-resistance test.

PART 3 EXECUTION

3.1 TESTING

3.1.1 IES LM-79 Report

a. Report on manufacturer's standard production model luminaire shall be provided. IES LM-79 shall include:

1. Testing agency, report number, date, manufacturer's name, catalog number, LED driver, drive current, ambient temperature

2. Luminaire Efficacy (Lumens/watt)

3. Color Qualities (CCT and CRI)

4. Electrical Measurements (input voltage, input current, input power (watts))

5. Spectral Distribution over visible wavelengths (mW/nm)

b. In addition, report shall include the following based on the IES LM-79 testing:

1. Picture of sample

2. Isocandela Plot

3. Luminance Summary table

4. Illuminance - Point to Point

5. Illuminance - Isofootcandle Plot

6. Absolute Intensity Candlepower (cd) Summary table

7. Photometric File

3.1.2 IES LM-80 Report

a. Report on manufacturer's standard production LED package, array, or module shall be included.

b. Report shall include:

1. Testing agency, report number, date, type of equipment, and LED light source being tested.

2. All data required by IES LM-80

3.1.3 Laboratories

a. Test laboratories for the IES LM-79 and IES LM-80 reports shall be one of the following:

1. National Voluntary Laboratory Accreditation Program (NVLAP) accredited for solid state lighting testing as part of the Energy-Efficient Lighting Products laboratory accreditation program.

2. One of the qualified labs listed on the DOE SSL web site (http://www1.eere.energy.gov/buildings/ssl/test_labs.html).

3. A manufacturer's in-house lab that meets the following criteria:

a) Manufacturer has been regularly engaged in the design and production of light emitting diode indoor luminaires and the manufacturer's lab has been successfully certifying these fixtures for a minimum of 5 years.,

b) Annual equipment calibration including photometer calibration in accordance with National Institute of Standards and Technology.

b. Submit operating test results as stated in paragraph entitled "Field Quality Control".

3.1.4 Fixture Useful Life Certificate

Provide certification from the manufacturer indicating the expected useful life of the luminaires provided. The useful life shall be directly correlated to the IES LM-80 test data, adjusted for the thermal properties of manufacturer's luminaire, and adjusted for local average ambient operating conditions.

3.2 INSTALLATION

Ensure all electrical installations conform to IEEE C2, NFPA 70, and to the requirements specified herein.

3.2.1 Lamps

Deliver lamps of the type, wattage, and voltage rating indicated to the project in the original cartons and installed just prior to project completion. Replace lamps installed and used for working light during construction prior to turnover to the Government if more than 15 percent of

their rated life has been used. Test the lamps for proper operation prior to turn-over and replace if necessary with new lamps from the original manufacturer. Provide 10 percent spare lamps of each type from the original manufacturer.

3.2.2 Lighting Fixtures

Set lighting fixtures plumb, square, and level with ceiling and walls, in alignment with adjacent lighting fixtures, and secure in accordance with manufacturers' directions and approved drawings, in conformance with the requirements of NFPA 70. Mounting heights specified or indicated are to the bottom of fixture for ceiling-mounted fixtures and to center of fixture for wall-mounted fixtures. Obtain approval of the exact mounting for lighting fixtures on the job before commencing installation and, where applicable, after coordinating with the type, style, and pattern of the ceiling being installed. Independently support recessed and semi-recessed fixtures from the building structure by a minimum of four wires or straps or rods per fixture and located near each corner of each fixture. Ceiling grid clips are not allowed as an alternative to independently supported light fixtures. Independently support round fixtures smaller in size than the ceiling grid from the building structure by a minimum of four wires or straps or rods per fixture spaced approximately equidistant around the fixture. Do not support fixtures by ceiling acoustical panels. Where fixtures of sizes less than the ceiling grid are indicated to be centered in the acoustical panel, support such fixtures independently and provide at least two 3/4 inch metal channels spanning, and secured to, the ceiling tees for centering and aligning the fixture.

3.3 FIELD APPLIED PAINTING

Paint electrical equipment as required to match finish of adjacent surfaces or to meet the indicated or specified safety criteria.

3.4 FIELD QUALITY CONTROL

Upon completion of installation, verify that equipment is properly installed, connected, and adjusted. Conduct an operating test to show that equipment operates in accordance with requirements of this section.

3.5 FIELD TESTING

Demonstrate that all incandescent lighting fixtures and their accessories, including lowering devices, operate satisfactorily in the presence of the Contracting Officer.

Perform tests in accordance with referenced standards in this section.

-- End of Section --

SECTION 26 52 00.00 40

EMERGENCY LIGHTING
08/11

PART 1 GENERAL

1.1 REFERENCES

The publications listed below form a part of this specification to the extent referenced. The publications are referred to within the text by the basic designation only.

NATIONAL FIRE PROTECTION ASSOCIATION (NFPA)

NFPA 101	(2012; Amendment 1 2012) Life Safety Code
NFPA 70	(2014; AMD 1 2013; Errata 2013; AMD 2 2013) National Electrical Code

UNDERWRITERS LABORATORIES (UL)

UL 924	(2006; Reprint Feb 2011) Standard for Emergency Lighting and Power Equipment

1.2 ADMINISTRATIVE REQUIREMENTS

Section 26 00 00.00 20 BASIC ELECTRICAL MATERIALS AND METHODS applies to work specified in this section.

1.3 SUBMITTALS

Government approval is required for submittals with a "G" designation; submittals not having a "G" designation are for Contractor Quality Control approval. Submit the following in accordance with Section 01 33 00 SUBMITTAL PROCEDURES:

SD-03 Product Data

Emergency Lighting Egress Units; G

System Operational Tests

SD-07 Certificates

Certificates of Conformance
Warranty; G

PART 2 PRODUCTS

2.1 SYSTEM DESCRIPTION

Furnish emergency lighting units completely assembled with wiring and mounting devices, ready for installation at the locations indicated. Equip fixtures with lamps. Ensure emergency lighting units are suitable for operation on the ac supply circuit to which they are to be electrically connected.

2.1.1 Performance Requirements

Provide emergency lighting units conforming to UL 924 and NFPA 101.

2.2 MANUFACTURED UNITS

2.2.1 Emergency Lighting Egress Units

Provide complete self-contained emergency lighting units with batteries, battery charger, one or more local or remote lamp heads with lamps, under-voltage relay, indicator lights, on/off switch, and test switch, in accordance with UL 924 for Type I (emergency light set), Class I rechargeable storage-battery-powered unit, Style D non-refillable nickel-cadmium battery, as indicated.

2.2.1.1 Batteries

Provide batteries rated as indicated on design drawings. Provide batteries with the capacity and rating to supply the lamp load with maintained 87.5 -percent power, minimum, for 1.5 hours, or the battery-lamp combination maintaining 60-percent, minimum, illumination. Provide maintenance-free nickel-cadmium type batteries, with a minimum normal life of 10 years.

2.2.1.2 Battery Charger

Include in battery charger a dry-type full-wave rectifier with two charging rates, one to automatically maintain the battery in a fully charged state under normal conditions and the other to automatically recharge the battery to a fully charged state within 12 hours after continuous discharge of 1-1/2 hours through the connected lampload.

2.2.1.3 Unit Enclosure

Fabricate the unit enclosure from material as indicated on design drawings. Design of cover is to provide access to the battery and battery-charger compartments and have a full-length piano hinge and a latching device. Protect component parts within the enclosure from dust, moisture, and oxidizing fumes from the battery. Coat interior and exterior surfaces of enclosure with a corrosion-resistant gray baked-enamel finish.

2.2.1.4 Lampheads, Lamps, and Indicating Lights

Mount the lampheads on the top of the unit enclosure, or wall mount, except where otherwise indicated and fully adjustable in the horizontal and vertical planes.

Provide sealed-beam type lamps, type as indicated on design drawings, rated not less than 3 watts at the specified dc voltage.

Mount an amber "ready-for-use on alternating current" indicating light, a red "recharging on alternating current" indicating light, and a momentary-contact pushbutton test switch on the cover of the unit enclosure. The amber light indicates, when illuminated, that the unit is electrically connected to the normal ac supply source and that the battery is fully charged. The red light indicates, when illuminated, that the battery is being recharged. The momentary-contact pushbutton test switch transfers the unit from normal supply to battery supply and tests operation of equipment under simulated ac source power failure.

2.2.1.5 Relays and Switches

Provide an under-voltage relay of the self-clearing type which automatically connects the lampload to the battery supply upon failure of the alternating current supply. Mount an on-off toggle switch inside the unit enclosure to disconnect the battery from the lampload when the unit is taken out of service for maintenance purposes. The relay energizes when the ac supply falls to 70 percent of normal voltage.

2.2.1.6 Mounting Shelves

Provide emergency lighting units with wall mounting supports. Coat the mounting supports with a corrosion-resistant finish in accordance with manufacturer's standard practice.

PART 3 EXECUTION

3.1 INSTALLATION

Permanently fix in place the emergency lighting unit and install wiring for each unit in accordance with NFPA 70. Use the same panel bus or branch circuit as that serving the normal lighting in the area for the branch circuit feeding the unit equipment, and connect ahead of area switches. Keep remotely connected emergency lighting circuit wiring independent of all other wiring and equipment and do not enter the same conduit, cable, box, or cabinet with other wiring unless the fixture is supplied from two sources.

Mount emergency lighting units and remote lamps at a minimum of 8 feet above the finished floor.

3.2 FIELD TESTING

Demonstrate emergency lighting units to operate satisfactorily in the presence of the Contracting Officer.

Perform and submit System Operational Tests in accordance with referenced standards in this section.

3.3 WARRANTY

Submit 5 copies of warranty, signed by an authorized representative, designating the Government as warrantee, to the Contracting Officer, 5 days prior to project closeout.

-- End of Section --

SECTION 26 53 00.00 40

EXIT SIGNS
11/08

PART 1 GENERAL

1.1 REFERENCES

The publications listed below form a part of this specification to the extent referenced. The publications are referred to within the text by the basic designation only.

NATIONAL FIRE PROTECTION ASSOCIATION (NFPA)

NFPA 101	(2012; Amendment 1 2012) Life Safety Code

U.S. DEPARTMENT OF ENERGY (DOE)

DOE LT-4	(2000) How to Buy Energy-Efficient Exit Signs

UNDERWRITERS LABORATORIES (UL)

UL 924	(2006; Reprint Feb 2011) Standard for Emergency Lighting and Power Equipment

1.2 ADMINISTRATIVE REQUIREMENTS

Section 26 00 00.00 20 BASIC ELECTRICAL MATERIALS AND METHODS applies to work specified in this Section.

1.3 SUBMITTALS

Government approval is required for submittals with a "G" designation; submittals not having a "G" designation are for Contractor Quality Control approval. Submit the following in accordance with Section 01 33 00 SUBMITTAL PROCEDURES:

SD-02 Shop Drawings

Exit Lighting Units

Exit Lighting Units Outline Drawings

SD-03 Product Data

Exit Lighting Units; G

SD-07 Certificates

Energy Efficiencies

PART 2 PRODUCTS

2.1 PRODUCT STANDARDS

Provide emergency exit lighting fixtures conforming to UL 924, NFPA 101,

and as specified.

Provide exit lighting fixtures completely assembled with wiring and mounting devices, ready for installation at the locations indicated. Ensure ceiling-mounted fixtures are designed to be supported independent of the ceiling and equipped with lamps.

2.1.1 Energy Efficiencies

Provide exit lighting fixtures having efficiencies in accordance with the recommended levels specified in DOE LT-4.

2.2 EMERGENCY POWER LOSS EXIT LIGHTING UNITS

Provide each self-contained unit with an automatic power failure device, test switch, pilot light, and fully automatic high/low solid-state trickle charger in a self-contained power pack. Provide with nickel-cadmium type battery, maintenance-free for a period of not less than 10-years under normal operating conditions. Ensure normal operation is with 120-volts.

2.3 LIGHT EMITTING DIODES (LEDs) EXIT LIGHTING FIXTURES

Provide single faced exit lighting fixtures with sheet metal enclosures, including frames, battery charger, batteries, red light emitting diodes (LEDs), and mounting brackets with mounting plates suitable for securing the fixture to a 4 inch outlet box. Ensure fixture features include:

a. continuous charging

b. automatic switching to standby batteries upon loss of power

c. overload protection

d. short circuit protection

e. test switch

f. low voltage disconnect

g. switch controlled left and right LED directional arrows

h. field connectable to operate from 115 volts

i. brightness not less than ten (10) candlepower

Provide unit battery system with minimum operating time of three (3) hours for double faced fixtures and seven (7) hours for single faced fixtures.

Provide a five year warranty for all components.

PART 3 EXECUTION

3.1 INSTALLATION

Connect fixtures to the main panel bus through overcurrent protection. Use emergency lighting panel where available.

3.2 FIELD TESTING

Field test exit lighting to demonstrate satisfactory operation in the presence of the Contracting Officer.

Perform and submit Operational Tests in accordance with referenced standards in this section.

-- End of Section --

SECTION 26 56 00

EXTERIOR LIGHTING
05/13

PART 1 GENERAL

1.1 REFERENCES

The publications listed below form a part of this specification to the extent referenced. The publications are referred to in the text by the basic designation only.

AMERICAN ASSOCIATION OF STATE HIGHWAY AND TRANSPORTATION OFFICIALS (AASHTO)

AASHTO LTS	(2013; Errata 2013) Standard Specifications for Structural Supports for Highway Signs, Luminaires and Traffic Signals

ASTM INTERNATIONAL (ASTM)

ASTM A153/A153M	(2009) Standard Specification for Zinc Coating (Hot-Dip) on Iron and Steel Hardware
ASTM B108/B108M	(2012; E 2012) Standard Specification for Aluminum-Alloy Permanent Mold Castings
ASTM B117	(2011) Standard Practice for Operating Salt Spray (Fog) Apparatus
ASTM C1089	(2013) Standard Specification for Spun Cast Prestressed Concrete Poles

ILLUMINATING ENGINEERING SOCIETY OF NORTH AMERICA (IES)

IES HB-10	(2011) IES Lighting Handbook
IES LM-79	(2008) Electrical and Photometric Measurements of Solid-State Lighting Products
IES LM-80	(2008) Measuring Lumen Maintenance of LED Light Sources
IES RP-16	(2010; Addendum A 2008; Addenda B & C 2009) Nomenclature and Definitions for Illuminating Engineering
IES RP-8	(2000; Errata 2004; R 2005; Errata 2007) Roadway Lighting
IES TM-15	(2011) Luminaire Classification System for Outdoor Luminaires
IES TM-21	(2011) Projecting Long Term Lumen

Maintenance of LED Light Sources

INSTITUTE OF ELECTRICAL AND ELECTRONICS ENGINEERS (IEEE)

IEEE 100	(2000; Archived) The Authoritative Dictionary of IEEE Standards Terms
IEEE C2	(2012; Errata 2012; INT 1-4 2012; INT 5-6 2013) National Electrical Safety Code
IEEE C62.41.2	(2002) Recommended Practice on Characterization of Surges in Low-Voltage (1000 V and Less) AC Power Circuits

NATIONAL ELECTRICAL MANUFACTURERS ASSOCIATION (NEMA)

ANSI C136.13	(2004; R 2009) American National Standard for Roadway Lighting Equipment, Metal Brackets for Wood Poles
ANSI C136.21	(2004; R 2009) American National Standard for Roadway and Area Lighting Equipment - Vertical Tenons Used with Post-Top-Mounted Luminaires
ANSI C136.3	(2005; R 2009) American National Standard for Roadway and Area Lighting Equipment Luminaire Attachments
NEMA 250	(2008) Enclosures for Electrical Equipment (1000 Volts Maximum)
NEMA ANSLG C78.377	(2011) American National Standard for Electric Lamps— Specifications for the Chromaticity of Solid State Lighting Products
NEMA C136.31	(2010) American National for Roadway and Area Lighting Equipment - Luminaire Vibration
NEMA C82.77	(2002) Harmonic Emission Limits - Related Power Quality Requirements for Lighting Equipment
NEMA ICS 2	(2000; R 2005; Errata 2008) Standard for Controllers, Contactors, and Overload Relays Rated 600 V
NEMA ICS 6	(1993; R 2011) Enclosures
NEMA IEC 60529	(2004) Degrees of Protection Provided by Enclosures (IP Code)

NATIONAL FIRE PROTECTION ASSOCIATION (NFPA)

NFPA 70	(2014; AMD 1 2013; Errata 2013; AMD 2 2013) National Electrical Code

U.S. NATIONAL ARCHIVES AND RECORDS ADMINISTRATION (NARA)

47 CFR 15	Radio Frequency Devices

UNDERWRITERS LABORATORIES (UL)

UL 1310	(2011; Reprint Oct 2013) UL Standard for Safety Class 2 Power Units
UL 1598	(2008; Reprint Oct 2012) Luminaires
UL 773	(1995; Reprint Mar 2002) Standard for Plug-In, Locking Type Photocontrols for Use with Area Lighting
UL 773A	(2006; Reprint Nov 2013) Standard for Nonindustrial Photoelectric Switches for Lighting Control
UL 8750	(2009; Reprint Sep 2013) UL Standard for Safety Light Emitting Diode (LED) Equipment for Use in Lighting Products

1.2 RELATED REQUIREMENTS

Materials not considered to be luminaires or lighting equipment are specified in Section(s) 33 71 02 UNDERGROUND ELECTRICAL DISTRIBUTION. Luminaires and accessories installed in interior of buildings are specified in Section 26 51 00.00 40 INTERIOR LIGHTING.

1.3 DEFINITIONS

a. Unless otherwise specified or indicated, electrical and electronics terms used in these specifications, and on the drawings shall be as defined in IEEE 100 and IES RP-16.

b. For LED luminaire light sources, "Useful Life" is the operating hours before reaching 70 percent of the initial rated lumen output (L70) with no catastrophic failures under normal operating conditions. This is also known as 70 percent "Rated Lumen Maintenance Life" as defined in IES LM-80.

c. The "Groundline Section" of wood poles is that portion of the pole between one foot above, and 2 feet below the groundline.

1.4 SUBMITTALS

Government approval is required for submittals with a "G" designation; submittals not having a "G" designation are for Contractor Quality Control approval. The following shall be submitted in accordance with Section 01 33 00 SUBMITTAL PROCEDURES:

SD-01 Preconstruction Submittals

Photometric Plan; G

LED Luminaire Warranty; G

SD-02 Shop Drawings

Luminaire drawings; G

Poles; G

SD-03 Product Data

Submit Manufacturer's catalog data for the following items:

Enclosed, Gasketed, and Explosionproof Vapor-Tight Fixtures

Luminaire Light Sources; G

Luminaire Power Supply Units (Drivers); G

Lighting contactor; G

Photocell; G

Aluminum poles; G

Brackets

SD-05 Design Data

Design Data for luminaires; G

SD-06 Test Reports

LED Luminaire - IES LM-79 Test Report; G

LED Light Source - IES LM-80 Test Report; G

Operating test

Submit operating test results as stated in paragraph entitled "Field Quality Control."

SD-07 Certificates

Luminaire Useful Life Certificate; G

Submit certification from the manufacturer indicating the expected useful life of the luminaires provided. The useful life shall be directly correlated from the IES LM-80 test data using procedures outlined in IES TM-21. Thermal properties of the specific luminaire and local ambient operating temperature and conditions shall be taken into consideration.

SD-10 Operation and Maintenance Data

Operational Service

Submit documentation that includes contact information, summary of procedures, and the limitations and conditions applicable to the project. Indicate manufacturer's commitment to reclaim materials for recycling and/or reuse.

1.5 QUALITY ASSURANCE

1.5.1 Drawing Requirements

1.5.1.1 Luminaire Drawings

Include dimensions, effective projected area (EPA), accessories, and installation and construction details. Photometric data, including zonal lumen data, average and minimum ratio, aiming diagram, and candlepower distribution data shall accompany shop drawings.

1.5.1.2 Poles

Include dimensions, wind load determined in accordance with AASHTO LTS, pole deflection, pole class, and other applicable information.

1.5.2 Photometric Plan

For LED luminaires, include computer-generated photometric analysis of the "designed to" values for the "end of useful life" of the luminaire installation using a light loss factor of 0.7. For LED and all other types of luminaires, the submittal shall include the following:

a. Horizontal illuminance measurements at finished grade, taken at a maximum of every 10 feet.

b. Vertical illuminance measurements at 5 feet above finished grade.

c. Minimum and maximum footcandle levels.

d. Average maintained footcandle level.

e. Maximum to minimum ratio for horizontal illuminance only.

1.5.3 Design Data for Luminaires

a. Provide distribution data according to IES classification type as defined in IES HB-10.

b. Shielding as defined by IES RP-8 or B.U.G. rating for the installed position as defined by IES TM-15.

c. Provide safety certification and file number for the luminaire family. Include listing, labeling and identification per NFPA 70 (NEC). Applicable testing bodies are determined by the US Occupational Safety Health Administration (OSHA) as Nationally Recognized Testing Laboratories (NRTL) and include: CSA (Canadian Standards Association), ETL (Edison Testing Laboratory), and UL (Underwriters Laboratories).

d. Provide long term lumen maintenance projections for each LED luminaire in accordance with IES TM-21. Data used for projections shall be obtained from testing in accordance with IES LM-80.

e. Provide wind loading calculations for luminaires mounted on poles. Weight and effective projected area (EPA) of luminaires and mounting brackets shall not exceed maximum rating of pole as installed in particular wind zone area.

1.5.4 LED Luminaire - IES LM-79 Test Report

Submit test report on manufacturer's standard production model luminaire. Submittal shall include all photometric and electrical measurements, as well as all other pertinent data outlined under "14.0 Test Report" in IES LM-79.

1.5.5 LED Light Source - IES LM-80 Test Report

Submit report on manufacturer's standard production LED package, array, or module. Submittal shall include:

a. Testing agency, report number, date, type of equipment, and LED light source being tested.

b. All data required by IES LM-80.

1.5.5.1 Test Laboratories

Test laboratories for the IES LM-79 and IES LM-80 test reports shall be one of the following:

a. National Voluntary Laboratory Accreditation Program (NVLAP) accredited for solid-state lighting testing as part of the Energy-Efficient Lighting Products laboratory accreditation program.

b. One of the qualified labs listed on the Department of Energy - Energy Efficiency & Renewable Energy, Solid-State Lighting web site.

c. A manufacturer's in-house lab that meets the following criteria:

    1. Manufacturer has been regularly engaged in the design and production of high intensity discharge roadway and area luminaires and the manufacturer's lab has been successfully certifying these fixtures for a minimum of 15 years.

    2. Annual equipment calibration including photometer calibration in accordance with National Institute of Standards and Technology.

1.5.6 Regulatory Requirements

In each of the publications referred to herein, consider the advisory provisions to be mandatory, as though the word, "shall" had been substituted for "should" wherever it appears. Interpret references in these publications to the "authority having jurisdiction," or words of similar meaning, to mean the Contracting Officer. Equipment, materials, installation, and workmanship shall be in accordance with the mandatory and advisory provisions of NFPA 70 unless more stringent requirements are specified or indicated.

1.5.7 Standard Products

Provide materials and equipment that are products of manufacturers regularly engaged in the production of such products which are of equal material, design and workmanship. Products shall have been in satisfactory commercial or industrial use for 2 years prior to bid opening. The 2-year period shall include applications of equipment and materials under similar circumstances and of similar size. The product shall have been on sale on the commercial market through advertisements, manufacturers' catalogs, or

brochures during the 2-year period. Where two or more items of the same class of equipment are required, these items shall be products of a single manufacturer; however, the component parts of the item need not be the products of the same manufacturer unless stated in this section.

1.5.7.1 Alternative Qualifications

Products having less than a 2-year field service record will be acceptable if the manufacturer has been regularly engaged in the design and production of high intensity discharge roadway and area luminaires for a minimum of 15 years. Products shall have been in satisfactory commercial or industrial use for 15 years prior to bid opening. The product shall have been on sale on the commercial market through advertisements, manufacturers' catalogs, or brochures during the 15-year period.

1.5.7.2 Material and Equipment Manufacturing Date

Products manufactured more than 1 year prior to date of delivery to site shall not be used, unless specified otherwise.

1.6 DELIVERY, STORAGE, AND HANDLING OF POLES

1.6.1 Aluminum Poles

Do not store poles on ground. Support poles so they are at least one foot above ground level and growing vegetation. Do not remove factory-applied pole wrappings until just before installing pole.

1.7 WARRANTY

The equipment items shall be supported by service organizations which are reasonably convenient to the equipment installation in order to render satisfactory service to the equipment on a regular and emergency basis during the warranty period of the contract.

1.7.1 LED Luminaire Warranty

Provide Luminaire Useful Life Certificate.

The equipment items shall be supported by service organizations which are reasonably convenient to the equipment installation in order to render satisfactory service to the equipment on a regular and emergency basis during the warranty period of the contract.

a. Provide a written five year on-site replacement warranty for material, fixture finish, and workmanship. On-site replacement includes transportation, removal, and installation of new products.

    1. Finish warranty shall include warranty against failure and against substantial deterioration such as blistering, cracking, peeling, chalking, or fading.

    2. Material warranty shall include:

        (a) All power supply units (drivers).

        (b) Replacement when more than 10 percent of LED sources in any lightbar or subassembly(s) are defective or non-starting.

b. Warranty period must begin on date of beneficial occupancy. Contractor shall provide the Contracting Officer signed warranty certificates prior to final payment.

1.8 OPERATIONAL SERVICE

Coordinate with manufacturer for maintenance agreement. Collect information from the manufacturer about maintenance agreement options, and submit to Contracting Officer. Services shall reclaim materials for recycling and/or reuse. Services shall not deposit materials in landfills or burn reclaimed materials. Indicate procedures for compliance with regulations governing disposal of mercury. When such a service is not available, local recyclers shall be sought after to reclaim the materials.

PART 2 PRODUCTS

2.1 PRODUCT COORDINATION

Products and materials not considered to be luminaires, equipment or accessories are specified in Section 33 71 02 UNDERGROUND ELECTRICAL DISTRIBUTION, and Section 26 20 00 INTERIOR DISTRIBUTION SYSTEM. Luminaires and associated equipment and accessories for interior applications are specified in Section 26 51 00.00 40 INTERIOR LIGHTING.

2.2 LED LUMINAIRES

UL 1598, NEMA C82.77 and UL 8750. Provide luminaires as indicated in luminaire schedule and XL plates or details on project plans. Provide luminaires complete with light sources of quantity, type, and wattage indicated. All luminaires of the same type shall be provided by the same manufacturer.

2.2.1 General Requirements

a. LED luminaire housings shall be die cast or extruded aluminum.

b. LED luminaires shall be rated for operation within an ambient temperature range of minus 22 degrees F to 122 degrees F.

c. Luminaires shall be UL listed for wet locations per UL 1598. Optical compartment for LED luminaires shall be sealed and rated a minimum of IP65 per NEMA IEC 60529.

d. LED luminaires shall produce a minimum efficacy as shown in the following table, tested per IES LM-79. Theoretical models of initial raw LED lumens per watt are not acceptable.

Application	Luminaire Efficacy in Lumens per Watt
Exterior Pole/Arm-Mounted Area and Roadway Luminaires	65
Exterior Wall-Mounted Area Luminaires	60
Canopy Luminaires	65

e. Luminaires shall have IES distribution and NEMA field angle

classifications as indicated in luminaire schedule on project plans per IES HB-10.

f. Housing finish shall be baked-on enamel, anodized, or baked-on powder coat paint. Finish shall be capable of surviving ASTM B117 salt fog environment testing for 2500 hours minimum without blistering or peeling.

g. Luminaires shall not exceed the following IES TM-15 Backlight, Uplight and Glare (B.U.G.) ratings:

   1. Maximum Backlight (B) rating shall be determined by lighting zone in which luminaire is placed.

   2. Maximum Uplight (U) rating shall be U0.

   3. Maximum Glare (G) rating shall be determined by lighting zone in which luminaire is placed.

h. Luminaires shall be fully assembled and electrically tested prior to shipment from factory.

i. The finish color shall be as indicated in the luminaire schedule or detail on the project plans.

j. Luminaire arm bolts shall be 304 stainless steel or zinc-plated steel.

k. Luminaire lenses shall be constructed of clear tempered glass or UV-resistant acrylic.

l. The wiring compartment on pole-mounted, street and area luminaires must be accessible without the use of hand tools to manipulate small screws, bolts, or hardware.

m. Incorporate modular electrical connections, and construct luminaires to allow replacement of all or any part of the optics, heat sinks, power supply units, ballasts, surge suppressors and other electrical components using only a simple tool, such as a manual or cordless electric screwdriver.

n. Luminaires shall have a nameplate bearing the manufacturer's name, address, model number, date of manufacture, and serial number securely affixed in a conspicuous place. The nameplate of the distributing agent will not be acceptable.

o. Roadway and area luminaires shall have an integral tilt adjustment of plus or minus 5 degrees to allow the unit to be leveled in accordance with ANSI C136.3.

p. Luminaire must pass 3G vibration testing in accordance with NEMA C136.31.

q. All factory electrical connections shall be made using crimp, locking, or latching style connectors. Twist-style wire nuts are not acceptable.

2.2.2 ENCLOSED, GASKETED, AND EXPLOSIONPROOF VAPOR-TIGHT FIXTURES

Provide enclosed, gasketed, and explosionproof vapor-tight fixtures suitable for wet or damp locations consisting of a cast-aluminum body, cap or matching outlet box, porcelain lampholder, impact resistant lens, cork

gaskets, and cast-aluminum guards for wall, ceiling, or pendant mounting in accordance with UL 1598 and NFPA 70. Fixtures shall be suitable for use in classified (i.e., Class I Division 1/2) environments as indicated and required in design drawings.

Furnish exposed cast aluminum outlet boxes for wall- and ceiling-mounted fixtures with four tapped hubs 90 degrees apart circumferentially, with three cast-aluminum threaded pipe plugs to fit the tapped holes. Provide boxes with ears or lugs for surface mounting to wall or ceiling. Provide body with mounting screws and gasket to ensure a vapor-tight joint between the body and outlet box. Outlet boxes and all required mounting accessories shall be rated for use in classified (i.e., Class I Division 1/2) environments as indicated and required in design drawings.

Concealed outlet boxes for wall- and ceiling-mounted fixtures may be standard sheet metal boxes. Provide fixture body with mounting screws and gasket to ensure a vapor-tight joint between the body and outlet box.

Seal body and cap for pendant-mounted fixtures with a gasket at the joint. Provide cast aluminum cap with top hub tapped for 1/2 inch tapered iron pipe threads.

Furnish cast aluminum exposed outlet boxes for pendant-mounted fixtures with the fixtures with four tapped hubs 90 degrees apart circumferentially, with three cast-aluminum threaded pipe plugs to fit the tapped holes. Supply boxes with ears or lugs for surface mounting to the ceiling. Provide cast aluminum outlet-box covers for concealed and exposed outlet boxes with the center hub tapped for 1/2 inch tapered iron pipe threads. Provide cover and outlet box with mounting screws and gasket to ensure a vapor-tight joint between the cover and outlet box. Also provide 1/2 inch galvanized rigid steel conduit stem.

Provide clear nondiffusing heat-resistant glass enclosing globe molded in one piece into a cylindrical shape with a closed bowl-shaped bottom and an open molded top bead or thread. Make edges of the open end either ground or molded to a smooth, true surface that will ensure a vapor-tight joint when the globe is fastened to the gasketed body.

Provide a cast-aluminum guard of the same shape as the glass enclosing globe which is affixed to the fixture body with threads or setscrews.

2.2.3 Luminaire Light Sources

2.2.3.1 LED Light Sources

a. Correlated Color Temperature (CCT) shall be in accordance with NEMA ANSLG C78.377:

   1. Nominal CCT: 5000 degrees K: 5028 plus or minus 283 degrees K

   2. Nominal CCT: 5700 degrees K: 5665 plus or minus 355 degrees K

b. Color Rendering Index (CRI) shall be:

   1. Greater than or equal to 65 for 4000 to 6000 degrees K light sources.

c. Color Consistency:

1. Manufacturer shall utilize a maximum 4-step MacAdam ellipse binning tolerance for color consistency of LEDs used in luminaires.

2.2.4 Luminaire Power Supply Units (Drivers)

2.2.4.1 LED Power Supply Units (Drivers)

UL 1310. LED Power Supply Units (Drivers) shall meet the following requirements:

a. Minimum efficiency shall be 85 percent.

b. Drive current to each individual LED shall not exceed 600 mA, plus or minus 10 percent.

c. Shall be rated to operate between ambient temperatures of minus 22 degrees F and 104 degrees F.

d. Shall be designed to operate on the voltage system to which they are connected, typically ranging from 120 V to 480 V nominal.

e. Operating frequency shall be: 50 or 60 Hz.

f. Power Factor (PF) shall be greater than or equal to 0.90.

g. Total Harmonic Distortion (THD) current shall be less than or equal to 20 percent.

h. Shall meet requirements of 47 CFR 15, Class B.

i. Shall be RoHS-compliant.

j. Shall be mounted integral to luminaire. Remote mounting of power supply is not allowed.

k. Power supplies in luminaires mounted under a covered structure, such as a canopy, or where otherwise appropriate shall be UL listed with a sound rating of A.

l. Shall be equipped with over-temperature protection circuit that turns light source off until normal operating temperature is achieved.

2.2.5 LED Luminaire Surge Protection

Provide surge protection integral to luminaire to meet C Low waveforms as defined by IEEE C62.41.2, Scenario 1, Location Category C.

2.3 EXTERIOR LUMINAIRE CONTROLS

2.3.1 Photocell

UL 773 or UL 773A. Photocells shall be hermetically sealed, silicon diode light sensor type, rated at 2.4 watts, 120V at Truck Fillstand and 277V elsewhere, 50/60 Hz with single-pole, single-throw contacts. Photocell shall be designed to fail to the ON position. Housing shall be constructed of UV stabilized polypropylene, rated to operate within a temperature range of minus 40 to 158 degrees F. Photocell shall have a 1/2 in threaded base for mounting to a junction box or conduit. Provide swivel base type housing. Photocell shall turn on at 1-3 footcandles and turn off at 3 to

15 footcandles. A time delay shall prevent accidental switching from transient light sources. Provide a directional lens in front of the cell to prevent fixed light sources from creating a turnoff condition. Provide photocell with metal oxide varistor (MOV) type surge protection.

2.3.2 Lighting Contactor

NEMA ICS 2. Provide an electrically-held lighting contactor housed in a NEMA 1 enclosure conforming to NEMA ICS 6. Contactor shall have 10 poles, configured as normally open (NO). Contacts shall be rated 600 volts, 30 amperes for a resistive load. Coil operating voltage shall be 120 volts. Contactor shall have silver cadmium oxide double-break contacts and shall require no arcing contacts. Provide contactor with hand-off-automatic selector switch.

2.4 POLES

Provide poles designed for wind loading of 107 miles per hour determined in accordance with AASHTO LTS while supporting luminaires and all other appurtenances indicated. The effective projected areas of luminaires and appurtenances used in calculations shall be specific for the actual products provided on each pole. Poles shall be anchor-base type designed for use with underground supply conductors. Poles shall have oval-shaped handhole having a minimum clear opening of 2.5 by 5 inches. Handhole cover shall be secured by stainless steel captive screws. Metal poles shall have an internal grounding connection accessible from the handhole near the bottom of each pole. Scratched, stained, chipped, or dented poles shall not be installed.

2.4.1 Strength Requirement

As an exception to the requirements of ASTM C1089, poles shall be naturally cured to achieve a 28-day compressive strength of 7000 psi. Poles shall not be subjected to severe temperature changes during the curing period.

2.4.2 Shaft Preparation

Completed prestressed concrete pole shaft shall have a hard, smooth, nonporous surface that is resistant to soil acids, road salts, and attacks of water and frost, and shall be clean, smooth, and free of surface voids and internal honeycombing. Poles shall not be installed for at least 15 days after manufacture.

2.4.3 Aluminum Poles

Provide aluminum poles manufactured of corrosion resistant aluminum alloys conforming to AASHTO LTS for Alloy 6063-T6 or Alloy 6005-T5 for wrought alloys and Alloy 356-T4 (3,5) for cast alloys. Poles shall be seamless extruded or spun seamless type with minimum 0.188 inch wall thickness. Provide a pole grounding connection designed to prevent electrolysis when used with copper ground wire. Tops of shafts shall be fitted with a round or tapered cover. Base shall be anchor bolt mounted, made of cast 356-T6 aluminum alloy in accordance with ASTM B108/B108M and shall be machined to receive the lower end of shaft. Joint between shaft and base shall be welded. Base cover shall be cast 356-T6 aluminum alloy in accordance with ASTM B108/B108M. Hardware, except anchor bolts, shall be either 2024-T4 anodized aluminum alloy or stainless steel. Manufacturer's standard provision shall be made for protecting the finish during shipment and installation. Minimum protection shall consist of spirally wrapping each

pole shaft with protective paper secured with tape, and shipping small parts in boxes.

2.5 BRACKETS AND SUPPORTS

ANSI C136.3, ANSI C136.13, and ANSI C136.21, as applicable. Pole brackets shall be not less than 1 1/4 inch aluminum secured to pole. Slip-fitter or pipe-threaded brackets may be used, but brackets shall be coordinated to luminaires provided, and brackets for use with one type of luminaire shall be identical. Brackets for pole-mounted street lights shall correctly position luminaire no lower than mounting height indicated. Mount brackets not less than 24 feet above street. Special mountings or brackets shall be as indicated and shall be of metal which will not promote galvanic reaction with luminaire head.

2.6 POLE FOUNDATIONS

Anchor bolts shall be steel rod having a minimum yield strength of 50,000 psi; at a minimum, the top 12 inches of the rod shall be galvanized in accordance with ASTM A153/A153M. Concrete shall be as specified in Section 03 30 00 CAST-IN-PLACE CONCRETE.

2.7 EQUIPMENT IDENTIFICATION

2.7.1 Manufacturer's Nameplate

Each item of equipment shall have a nameplate bearing the manufacturer's name, address, model number, and serial number securely affixed in a conspicuous place; the nameplate of the distributing agent will not be acceptable.

2.7.2 Labels

Provide labeled luminaires in accordance with UL 1598 requirements. Luminaires shall be clearly marked for operation of specific light sources and ballasts according to proper light source type. The following light source characteristics shall be noted in the format "Use Only _____":

a. Correlated color temperature (CCT) and color rendering index (CRI) for all luminaires.

Markings related to lamp type shall be clear and located to be readily visible to service personnel, but unseen from normal viewing angles when lamps are in place.

2.8 FACTORY APPLIED FINISH

Electrical equipment shall have factory-applied painting systems which shall, as a minimum, meet the requirements of NEMA 250 corrosion-resistance test.

PART 3 EXECUTION

3.1 INSTALLATION

Electrical installations shall conform to IEEE C2, NFPA 70, and to the requirements specified herein.

3.1.1 Aluminum Poles

Provide pole foundations with galvanized steel anchor bolts, threaded at the top end, with anchor plate and nut at the bottom end. Provide ornamental covers to match pole and galvanized nuts and washers for anchor bolts. Polyvinyl chloride (PVC) conduit ells and ground rods shall be as specified in Section 33 71 02 UNDERGROUND ELECTRICAL DISTRIBUTION. Thoroughly compact backfill with compacting arranged to prevent pressure between conductor, jacket, or sheath and the end of conduit ell. Adjust poles as necessary to provide a permanent vertical position with the bracket arm in proper position for luminaire location.

3.1.2 Photocell Switch Aiming

Aim switch according to manufacturer's recommendations. Mount switch on or beside each luminaire when switch is provided in cast weatherproof aluminum housing with swivel arm.

3.1.3 GROUNDING

Ground noncurrent-carrying parts of equipment including metal poles, luminaires, mounting arms, brackets, and metallic enclosures as specified in Section 33 71 02 UNDERGROUND ELECTRICAL DISTRIBUTION. Where copper grounding conductor is connected to a metal other than copper, provide specially treated or lined connectors suitable for this purpose.

3.1.4 FIELD APPLIED PAINTING

Paint electrical equipment as required to match finish of adjacent surfaces or to meet the indicated or specified safety criteria. Painting shall be as specified in Section 09 90 00 PAINTS AND COATINGS.

3.2 FIELD QUALITY CONTROL

Upon completion of installation, verify that equipment is properly installed, connected, and adjusted. Conduct an operating test after 100 hours of burn-in time to show that the equipment operates in accordance with the requirements of this section.

-- End of Section --

SECTION 31 23 00.00 20

EXCAVATION AND FILL
02/11

PART 1 GENERAL

1.1 REFERENCES

The publications listed below form a part of this specification to the extent referenced. The publications are referred to in the text by the basic designation only.

ASTM INTERNATIONAL (ASTM)

ASTM C136	(2006) Standard Test Method for Sieve Analysis of Fine and Coarse Aggregates
ASTM C33/C33M	(2013) Standard Specification for Concrete Aggregates
ASTM D1140	(2000; R 2006) Amount of Material in Soils Finer than the No. 200 (75-micrometer) Sieve
ASTM D1556	(2007) Density and Unit Weight of Soil in Place by the Sand-Cone Method
ASTM D1557	(2012) Standard Test Methods for Laboratory Compaction Characteristics of Soil Using Modified Effort (56,000 ft-lbf/ft3) (2700 kN-m/m3)
ASTM D2216	(2010) Laboratory Determination of Water (Moisture) Content of Soil and Rock by Mass
ASTM D2487	(2011) Soils for Engineering Purposes (Unified Soil Classification System)
ASTM D3786/D3786M	(2013) Hydraulic Bursting Strength of Textile Fabrics-Diaphragm Bursting Strength Tester Method
ASTM D4318	(2010) Liquid Limit, Plastic Limit, and Plasticity Index of Soils
ASTM D4355	(2007) Deterioration of Geotextiles from Exposure to Light, Moisture and Heat in a Xenon-Arc Type Apparatus
ASTM D4491	(1999a; R 2014; E 2014) Water Permeability of Geotextiles by Permittivity
ASTM D4533	(2011) Trapezoid Tearing Strength of Geotextiles
ASTM D4632/D4632M	(2008; E 2013; R 2013) Grab Breaking Load and Elongation of Geotextiles

ASTM D4751	(2012) Determining Apparent Opening Size of a Geotextile
ASTM D4759	(2011) Determining the Specification Conformance of Geosynthetics
ASTM D4833/D4833M	(2007; E 2013; R 2013) Index Puncture Resistance of Geotextiles, Geomembranes, and Related Products
ASTM D6938	(2010) Standard Test Method for In-Place Density and Water Content of Soil and Soil-Aggregate by Nuclear Methods (Shallow Depth)

U.S. ARMY CORPS OF ENGINEERS (USACE)

EM 385-1-1	(2008; Errata 1-2010; Changes 1-3 2010; Changes 4-6 2011; Change 7 2012) Safety and Health Requirements Manual

U.S. ENVIRONMENTAL PROTECTION AGENCY (EPA)

EPA SW-846.3-3	(1999, Third Edition, Update III-A) Test Methods for Evaluating Solid Waste: Physical/Chemical Methods

VIRGINIA DEPARTMENT OF TRANSPORTATION (VDOT)

Section 205	(2007) Road and Bridge Specifications
Section 208	(2007) Road and Bridge Specifications
Section 414	(2007) Road and Bridge Specifications

1.2 DEFINITIONS

1.2.1 Capillary Water Barrier

A layer of clean, poorly graded crushed rock, stone, or natural sand or gravel having a high porosity which is placed beneath a building slab with or without a vapor barrier to cut off the capillary flow of pore water to the area immediately below a slab.

1.2.2 Degree of Compaction

Degree of compaction is expressed as a percentage of the maximum density obtained by the test procedure presented in ASTM D1557, abbreviated as percent laboratory maximum density.

1.2.3 Hard Materials

Weathered rock, dense consolidated deposits, or conglomerate materials which are not included in the definition of "rock" but which usually require the use of heavy excavation equipment, ripper teeth, or jack hammers for removal.

1.2.4 Rock

Solid homogeneous interlocking crystalline material with firmly cemented, laminated, or foliated masses or conglomerate deposits, neither of which can be removed without systematic drilling and blasting, drilling and the use of expansion jacks or feather wedges, or the use of backhoe-mounted pneumatic hole punchers or rock breakers; also large boulders, buried masonry, or concrete other than pavement exceeding 1/2 cubic yard in volume. Removal of hard material will not be considered rock excavation because of intermittent drilling and blasting that is performed merely to increase production.

1.2.5 Pile Supported Structure

As used herein, a structure where both the foundation and floor slab are pile supported.

1.3 SUBMITTALS

Government approval is required for submittals with a "G" designation; submittals not having a "G" designation are for Contractor Quality Control approval. The following shall be submitted in accordance with Section 01 33 00 SUBMITTAL PROCEDURES:

SD-01 Preconstruction Submittals

Shoring and Sheeting Plan; G

Dewatering work plan; G

Submit 15 days prior to starting work.

SD-06 Test Reports

Borrow Site Testing; G

Fill and backfill test

Select material test

Porous fill test for capillary water barrier

Density tests

Moisture Content Tests

Copies of all laboratory and field test reports within 24 hours of the completion of the test.

1.4 DELIVERY, STORAGE, AND HANDLING

Perform in a manner to prevent contamination or segregation of materials.

1.5 CRITERIA FOR BIDDING

Base bids on the following criteria:

a. Surface elevations are as indicated.

b. Pipes or other artificial obstructions, except those indicated, will not be encountered.

c. Ground water elevations indicated by the boring log were those existing at the time subsurface investigations were made and do not necessarily represent ground water elevation at the time of construction. Seasonal perched water table conditions should be anticipated at or near (plus or minus 2 feet) the existing ground surface.

d. Material character is indicated by the boring logs.

e. Borrow material, Suitable backfill, and bedding material in the quantities required is not available at the project site.

f. Blasting will not be permitted. Remove material in an approved manner.

1.6 REQUIREMENTS FOR OFF SITE SOIL

Soils brought in from off site for use as backfill shall be tested for petroleum hydrocarbons, BTEX, PCBs and HW characteristics (including toxicity, ignitability, corrosivity, and reactivity). Backfill shall not contain concentrations of these analytes above the appropriate State and/or EPA criteria, and shall pass the tests for HW characteristics. Determine petroleum hydrocarbon concentrations by using appropriate State protocols. Determine BTEX concentrations by using EPA SW-846.3-3 Method 5035/8260B. Perform complete TCLP in accordance with EPA SW-846.3-3 Method 1311. Perform HW characteristic tests for ignitability, corrosivity, and reactivity in accordance with accepted standard methods. Perform PCB testing in accordance with accepted standard methods for sampling and analysis of bulk solid samples. Provide borrow site testing for petroleum hydrocarbons and BTEX from a grab sample of material from the area most likely to be contaminated at the borrow site (as indicated by visual or olfactory evidence), with at least one test from each borrow site. For each borrow site, provide borrow site testing for HW characteristics from a composite sample of material, collected in accordance with standard soil sampling techniques. Do not bring material onsite until tests results have been received and approved by the Contracting Officer.

1.7 QUALITY ASSURANCE

1.7.1 Contractor's Geotechnical Engineer

The Contractor shall hire a Professional Geotechnical Engineer to provide inspection of excavations and soil/groundwater conditions throughout construction. The Contractor's Geotechnical Engineer shall be responsible for performing pre-construction and periodic site visits throughout construction to assess site conditions. The Contractor's Geotechnical Engineer shall be responsible for inspecting the bottom of pipe trenches and utility structures to determine that they have suitable stability for the bedding. If the bottom of pipe trenches and utility structures do not have suitable stability for the bedding, the Contractor's Geotechnical Engineer shall provide recommendations for corrective action. The Contractor's Geotechnical Engineer shall be responsible for inspecting pavement subgrades during proof rolling to check for pockets of loose and/or soft material, and for providing recommendations for corrective action. No corrective action shall be taken without prior approval of the Contracting Officer. The Contractor's Geotechnical Engineer shall update the excavation, sheeting and dewatering plans as construction progresses to reflect changing conditions and shall submit an updated plan if necessary.

A written report shall be submitted, at least monthly, informing the Contractor and Contracting Officer of the status of the plan and an accounting of the Contractor's adherence to the plan addressing any present or potential problems. The Contractor's Geotechnical Engineer shall be available to meet with the Contracting Officer at any time throughout the contract duration.

1.7.2 Shoring and Sheeting Plan

Submit drawings and calculations, certified by a registered professional engineer, describing the methods for shoring and sheeting of excavations. Drawings shall include material sizes and types, arrangement of members, and the sequence and method of installation and removal. Calculations shall include data and references used.

1.7.3 Dewatering Work Plan

Submit procedures for accomplishing dewatering work.

1.7.4 Utilities

Movement of construction machinery and equipment over pipes and utilities during construction shall be at the Contractor's risk. Excavation made with power-driven equipment is not permitted within two feet of known Government-owned utility or subsurface construction. For work immediately adjacent to or for excavations exposing a utility or other buried obstruction, excavate by hand. Start hand excavation on each side of the indicated obstruction and continue until the obstruction is uncovered or until clearance for the new grade is assured. Support uncovered lines or other existing work affected by the contract excavation until approval for backfill is granted by the Contracting Officer. Report damage to utility lines or subsurface construction immediately to the Contracting Officer.

PART 2 PRODUCTS

2.1 SOIL MATERIALS

2.1.1 Satisfactory Materials

Any materials classified by ASTM D2487 as GW, GP, GM, GP-GM, GW-GM, GC, GP-GC, GM-GC, SW, SP, SM, SC free of debris, roots, wood, scrap material, vegetation, refuse, soft unsound particles, and frozen, deleterious, or objectionable materials. Unless specified otherwise, the maximum particle diameter shall be one-half the lift thickness at the intended location. Materials found on site that are excavated and classified by ASTM D2487 as CL may be used as Common Fill but shall not be used under buildings, structures or pavements.

2.1.2 Unsatisfactory Materials

Materials which do not comply with the requirements for satisfactory materials. Unsatisfactory materials also include man-made fills, trash, refuse, or backfills from previous construction. Unsatisfactory material also includes material classified as satisfactory which contains root and other organic matter, frozen material, and stones larger than 3 inches. The Contracting Officer shall be notified of any contaminated materials.

2.1.3 Cohesionless and Cohesive Materials

Cohesionless materials include materials classified in ASTM D2487 as GW, GP, SW, and SP. Cohesive materials include materials classified as GC, SC, ML, CL, MH, and CH. Materials classified as GM, GP-GM, GW-GM, SW-SM, SP-SM, and SM shall be identified as cohesionless only when the fines are nonplastic (plasticity index equals zero). Materials classified as GM and SM will be identified as cohesive only when the fines have a plasticity index greater than zero.

2.1.4 Common Fill

Approved, unclassified soil material with the characteristics required to compact to the soil density specified for the intended location.

2.1.5 Backfill and Fill Material

ASTM D2487, classification GW, GP, GM, GC, SW, SP, SM, SC with a maximum ASTM D4318 liquid limit of 35, maximum ASTM D4318 plasticity index of 12, and a maximum of 25 percent by weight passing ASTM D1140, No. 200 sieve.

2.1.6 Structural Fill

Structural fill material shall consist of sand or gravel containing less than 25 percent by weight of fines (SP, SM, SW, GP, GW), having a liquid limit less than 20 and plastic limit less than 6, and shall be free of rubble, organics, clay, debris and other unsuitable material.

2.1.7 Topsoil

Provide as specified in Section 32 92 19 SEEDING.

2.2 POROUS FILL MATERIAL

ASTM C33/C33M coarse aggregate Size 57 or 67 and conforming to the general soil material requirements specified in paragraph entitled "Satisfactory Materials." This material is to be used for, among other things, Capillary Water Barrier.

2.3 UTILITY BEDDING AND BACKFILL MATERIAL

Except as specified otherwise in the individual piping section, provide bedding for buried piping in accordance with VDOT Section 205, crusher run aggregate No. 25 or No. 26. Backfill material shall be crusher run aggregate, No. 25 or 26; or aggregate base material, Size 21A or 21B, conforming to VDOT Section 208.

2.4 BORROW

Obtain borrow materials required in excess of those furnished from excavations from sources outside of Government property.

2.5 FILTER FABRIC

Provide a needle-punched, non-woven polypropylene filter fabric with uniform thickness and strength. Use Class B Fabric for soil surcharge drainage blanket at the new Truck Fillstand and Class A Fabric under rip-rap and for separation at the road crossings. Fabric shall have the following manufacturer certified minimum average roll properties as

determined by ASTM D4759:

	Class A	Class B
a. Grab tensile strength (ASTM D4632/D4632M) machine and transversed direction	min. 180	120 lbs.
b. Grab elongation (ASTM D4632/D4632M) machine and transverse direction	min. 15	50 percent
c. Puncture resistance (ASTM D4833/D4833M)	min. 80	
d. Mullen burst strength (ASTM D3786/D3786M)	min. 290	130 psi
e. Trapezoidal Tear (ASTM D4533)	min. 50	50 lbs.
f. Apparent Opening Size (ASTM D4751)		70
g. Permeability (ASTM D4491)	k fabric greater than k Soil	
h. Ultraviolet Degradation (ASTM D4355)	70 percent Strength retained at 150 hours	

2.6 ROAD CROSSING BACKFILL

Provide a clean, free-draining granular material classified as SP-SM or better, containing less than 12 percent passing the No. 200 sieve.

2.7 MATERIAL FOR RIP-RAP

Bedding material, Filter fabric, and rock conforming to these requirements for construction indicated.

2.7.1 Bedding Material

Conform to VDOT Section 414.

2.7.2 Rock

Conform to VDOT Section 414, Class I.

2.8 LOW COMPRESSIVE STRENGTH MATERIAL (LCSM)

Low Compressive Strength Material (LCSM) shall be a flowable fill consisting of a slurry of fly ash, sand and cement that provides a liquid mixture during placement. LCSM shall have a compressive strength in the range of 100 to 300 psi. Where areas of unsuitable/unstable soils are encountered at the pipe support footing excavations, the unsuitable/unstable material shall be undercut and replaced with LCSM.

2.9 BURIED WARNING AND IDENTIFICATION TAPE

Polyethylene plastic warning tape manufactured specifically for warning and identification of buried utility lines. Provide tape on rolls, 3 inch minimum width, color coded as specified below for the intended utility with warning and identification imprinted in bold black letters continuously over the entire tape length. Warning and identification to read, "CAUTION, BURIED (intended service) LINE BELOW" or similar wording. Color and printing shall be permanent, unaffected by moisture or soil.

Warning Tape Color Codes	
Red:	Electric
Yellow:	Gas, Oil; Dangerous Materials
Orange:	Telephone and Other Communications
Blue:	Water Systems
Green:	Sewer Systems

2.9.1 Warning Tape for Metallic Piping

Acid and alkali-resistant polyethylene plastic tape conforming to the width, color, and printing requirements specified above. Minimum thickness of tape shall be 0.003 inch. Tape shall have a minimum strength of 1500 psi lengthwise, and 1250 psi crosswise, with a maximum 350 percent elongation.

2.9.2 Detectable Warning Tape for Non-Metallic Piping

Polyethylene plastic tape conforming to the width, color, and printing requirements specified above. Minimum thickness of the tape shall be 0.004 inch. Tape shall have a minimum strength of 1500 psi lengthwise and 1250 psi crosswise. Tape shall be manufactured with integral wires, foil backing, or other means of enabling detection by a metal detector when tape is buried up to 3 feet deep. Encase metallic element of the tape in a protective jacket or provide with other means of corrosion protection.

2.10 SURCHARGE FILL

Provide a suitable material that has a minimum in-place density of 115 lb/cf.

2.11 DETECTION WIRE FOR NON-METALLIC PIPING

Detection wire shall be insulated single strand, solid copper with a minimum of 12 AWG.

PART 3 EXECUTION

3.1 PROTECTION

3.1.1 Shoring and Sheeting

Provide shoring, bracing, cribbing, trench boxes, underpinning, and sheeting where indicated. In addition to Section 25 A and B of EM 385-1-1 and other requirements set forth in this contract, include provisions in the

shoring and sheeting plan that will accomplish the following:

a. Prevent undermining of pavements, foundations and slabs.

b. Prevent slippage or movement in banks or slopes adjacent to the excavation.

3.1.2 Drainage and Dewatering

Provide for the collection and disposal of surface and subsurface water encountered during construction.

3.1.2.1 Drainage

So that construction operations progress successfully, completely drain construction site during periods of construction to keep soil materials sufficiently dry. The Contractor shall establish/construct storm drainage features (ponds/basins) at the earliest stages of site development, and throughout construction grade the construction area to provide positive surface water runoff away from the construction activity and/or provide temporary ditches, dikes, swales, and other drainage features and equipment as required to maintain dry soils, prevent erosion and undermining of foundations. When unsuitable working platforms for equipment operation and unsuitable soil support for subsequent construction features develop, remove unsuitable material and provide new soil material as specified herein. It is the responsibility of the Contractor to assess the soil and ground water conditions presented by the plans and specifications and to employ necessary measures to permit construction to proceed. Excavated slopes and backfill surfaces shall be protected to prevent erosion and sloughing. Excavation shall be performed so that the site, the area immediately surrounding the site, and the area affecting operations at the site shall be continually and effectively drained.

3.1.2.2 Dewatering

Groundwater flowing toward or into excavations shall be controlled to prevent sloughing of excavation slopes and walls, boils, uplift and heave in the excavation and to eliminate interference with orderly progress of construction. French drains, sumps, ditches or trenches will not be permitted within 3 feet of the foundation of any structure, except with specific written approval, and after specific contractual provisions for restoration of the foundation area have been made. Control measures shall be taken by the time the excavation reaches the water level in order to maintain the integrity of the in situ material. While the excavation is open, the water level shall be maintained continuously, at least 1 foot below the working level.

Operate dewatering system continuously until construction work below existing water levels is complete. Submit performance records weekly.

3.1.3 Underground Utilities

Location of the existing utilities indicated is approximate. The Contractor shall physically verify the location and elevation of the existing utilities indicated prior to starting construction. The Contractor shall scan the construction site with electromagnetic and sonic equipment and mark the surface of the ground where existing underground utilities are discovered.

3.1.4 Machinery and Equipment

Movement of construction machinery and equipment over pipes during construction shall be at the Contractor's risk. Repair, or remove and provide new pipe for existing or newly installed pipe that has been displaced or damaged.

3.2 SURFACE PREPARATION

3.2.1 Clearing and Grubbing

Unless indicated otherwise, remove trees, stumps, logs, shrubs, brush and vegetation and other items that would interfere with construction operations within the lines 5 feet outside of each building and structure line. Remove stumps entirely. Grub out matted roots and roots over 2 inches in diameter to at least 18 inches below existing surface.

3.2.2 Stripping

Strip suitable soil from the site where excavation or grading is indicated and stockpile separately from other excavated material. Material unsuitable for use as topsoil, but suitable for other uses as defined in Part 2, shall be stockpiled and used on-site. Locate topsoil so that the material can be used readily for the finished grading. Where sufficient existing topsoil conforming to the material requirements is not available on site, provide borrow materials suitable for use as topsoil. Protect topsoil and keep in segregated piles until needed.

3.2.3 Unsuitable Material

Remove vegetation, debris, decayed vegetable matter, sod, mulch, and rubbish underneath paved areas or concrete slabs.

3.3 EXCAVATION

Excavate to contours, elevation, and dimensions indicated. Reuse excavated materials that meet the specified requirements for the material type required at the intended location. Keep excavations free from water. Excavate soil disturbed or weakened by Contractor's operations, soils softened or made unsuitable for subsequent construction due to exposure to weather. Excavations below indicated depths will not be permitted except to remove unsatisfactory material. Unsatisfactory material encountered below the grades shown shall be removed as provided in Paragraph 1.7.1. Refill with LCSM or structural fill material compacted to 95 percent of ASTM D1557 maximum dry density unless specified otherwise. Refill excavations cut below indicated depth with LCSM or structural fill material compacted to 95 percent of ASTM D1557 maximum density unless specified otherwise. Satisfactory material removed below the depths indicated, without specific direction of the Contracting Officer, shall be replaced with satisfactory materials to the indicated excavation grade; except as specified for spread footings. Determination of elevations and measurements of approved overdepth excavation of unsatisfactory material below grades indicated shall be done under the direction of the Contracting Officer.

3.3.1 Structures With Spread Footings

Ensure that footing subgrades have been inspected and approved by the Contracting Officer prior to concrete placement. Fill over excavations

with concrete during foundation placement.

3.3.2 Pipe Trenches

Excavate to the dimension indicated. Grade bottom of trenches to provide uniform support for each section of pipe after pipe bedding placement. Tamp if necessary to provide a firm pipe bed. Recesses shall be excavated to accommodate bells and joints so that pipe will be uniformly supported for the entire length. Rock, where encountered, shall be excavated to a depth of at least 6 inches below the bottom of the pipe.

3.3.3 Hard Material and Rock Excavation

Remove hard material and rock to elevations indicated in a manner that will leave foundation material in an unshattered and solid condition. Roughen level surfaces and cut sloped surfaces into benches for bond with concrete. Protect shale from conditions causing decomposition along joints or cleavage planes and other types of erosion. Removal of hard material and rock beyond lines and grades indicated will not be grounds for a claim for additional payment unless previously authorized by the Contracting Officer. Excavation of the material claimed as rock shall not be performed until the material has been cross sectioned by the Contractor and approved by the Contracting Officer. Common excavation shall consist of all excavation not classified as rock excavation.

3.3.4 Excavated Materials

Satisfactory excavated material required for fill or backfill shall be placed in the proper section of the permanent work required or shall be separately stockpiled if it cannot be readily placed. Satisfactory material in excess of that required for the permanent work and all unsatisfactory material shall be disposed of as specified in Paragraph "DISPOSITION OF SURPLUS MATERIAL."

3.3.5 Final Grade of Surfaces to Support Concrete

Excavation to final grade shall not be made until just before concrete is to be placed.

3.4 SUBGRADE PREPARATION

Unsatisfactory material in surfaces to receive fill or in excavated areas shall be removed and replaced with LCSM, structural fill material, or other material as provided in Paragraph 1.7.1. The surface shall be scarified to a depth of 6 inches before the fill is started. Sloped surfaces steeper than 1 vertical to 4 horizontal shall be plowed, stepped, benched, or broken up so that the fill material will bond with the existing material. When subgrades are less than the specified density, the ground surface shall be broken up to a minimum depth of 6 inches, pulverized, and compacted to the specified density. When the subgrade is part fill and part excavation or natural ground, the excavated or natural ground portion shall be scarified to a depth of 12 inches and compacted as specified for the adjacent fill. Material shall not be placed on surfaces that are muddy, frozen, or contain frost. Compaction shall be accomplished by sheepsfoot rollers, pneumatic-tired rollers, steel-wheeled rollers, or other approved equipment well suited to the soil being compacted. Material shall be moistened or aerated as necessary to plus or minus 2 percent of optimum moisture content. Minimum subgrade density shall be as specified herein.

3.4.1 Proof Rolling

Proof rolling shall be done on an exposed subgrade free of surface water (wet conditions resulting from rainfall) which would promote degradation of an otherwise acceptable subgrade. Compact the exposed subgrade soils with a large static drum roller. After compaction, proof roll a minimum of six passes with a large rubber-tired roller or loaded dump truck over the construction areas to locate loose or soft material. Successive passes should be overlapped 20 percent. Operate the proof rolling equipment in a systematic manner to ensure the number of passes over all areas, and at speeds between 2 1/2 to 3 1/2 miles per hour. Notify the Contracting Officer a minimum of 3 days prior to proof rolling. Proof rolling shall be performed in the presence of the Contracting Officer. Rutting or pumping of material shall be undercut as provided in Paragraph 1.7.1.

3.5 FILLING AND BACKFILLING

Fill and backfill to contours, elevations, and dimensions indicated. Compact each lift before placing overlaying lift.

3.5.1 Common Fill Placement

Provide for general site and under porous fill of pile-supported structures. Place in 6 inch lifts. Compact areas not accessible to rollers or compactors with mechanical hand tampers. Aerate material excessively moistened by rain to a satisfactory moisture content. Finish to a smooth surface by blading, rolling with a smooth roller, or both.

3.5.2 Backfill and Fill Material Placement

Provide for paved areas and under concrete slabs, except where select material is provided. Place in 6 inch lifts. Do not place over wet or frozen areas. Place backfill material adjacent to structures as the structural elements are completed and accepted. Backfill against concrete only when approved. Place and compact material to avoid loading upon or against the structure.

3.5.3 Structural Fill Placement

Place in 10 inch loose lifts. Do not place over wet or frozen areas. Backfill adjacent to structures shall be placed as structural elements are completed and accepted. Backfill against concrete only when approved. Place and compact material to avoid loading upon or against structure. Compact to at least 95 percent of ASTM D1557 maximum dry density.

3.5.4 Backfill and Fill Material Placement Over Pipes and at Walls

Backfilling shall not begin until construction below finish grade has been approved, underground utilities systems have been inspected, tested and approved, forms removed, and the excavation cleaned of trash and debris. Backfill shall be brought to indicated finish grade. Where pipe is coated or wrapped for protection against corrosion, the backfill material up to an elevation 2 feet above sewer lines and 1 foot above other utility lines shall be free from stones larger than 1 inch in any dimension. Heavy equipment for spreading and compacting backfill shall not be operated closer to foundation or retaining walls than a distance equal to the height of backfill above the top of footing; the area remaining shall be compacted in layers not more than 4 inches in compacted thickness with power-driven

hand tampers suitable for the material being compacted. Backfill shall be placed carefully around pipes or tanks to avoid damage to coatings, wrappings, or tanks. Backfill shall not be placed against foundation walls prior to 7 days after completion of the walls. As far as practicable, backfill shall be brought up evenly on each side of the wall and sloped to drain away from the wall.

3.5.5 Porous Fill Placement

Provide under floor and area-way slabs on a compacted subgrade. Place in 4 inch lifts with a minimum of two passes of a hand-operated plate-type vibratory compactor.

3.5.6 Road Crossing Backfill

Place backfill directly behind the Road Crossing walls; extend laterally back from the walls a minimum distance of four feet. Install filter fabric between the backfill and the existing site soils to prevent fines from contaminating the backfill. Compact the backfill to between 95 percent and 97 percent of D1557 maximum dry density. Compact the backfill material to with hand-operated mechanical tampers shall so as to not overcompact the backfill and potentially damage the walls. Heavy compaction equipment shall not be allowed within five feet of the below grade walls.

3.5.7 Trench Backfilling

Backfill as rapidly as construction, testing, and acceptance of work permits. Place and compact backfill under structures and paved areas in 6 inch lifts to top of trench and in 6 inch lifts to one foot over pipe outside structures and paved areas.

3.6 BORROW

Where satisfactory materials are not available in sufficient quantity from required excavations, approved borrow materials shall be obtained as specified herein.

3.7 BURIED WARNING AND IDENTIFICATION TAPE

Provide buried utility lines with utility identification tape. Bury tape 12 inches below finished grade; under pavements and slabs, bury tape 6 inches below top of subgrade.

3.8 BURIED DETECTION WIRE

Bury detection wire directly above non-metallic piping at a distance not to exceed 12 inches above the top of pipe. The wire shall extend continuously and unbroken, from manhole to manhole. The ends of the wire shall terminate inside the manholes at each end of the pipe, with a minimum of 3 feet of wire, coiled, remaining accessible in each manhole. The wire shall remain insulated over it's entire length. The wire shall enter manholes between the top of the corbel and the frame, and extend up through the chimney seal between the frame and the chimney seal. For force mains, the wire shall terminate in the valve pit at the pump station end of the pipe.

3.9 COMPACTION

Determine in-place density of existing subgrade; if required density exists, no compaction of existing subgrade will be required. Density

requirements specified herein are for cohesionless materials. When cohesive materials are encountered or used, density requirements may be reduced by 5 percent.

3.9.1 General Site

Compact underneath areas designated for vegetation and areas outside the 5 foot line of the paved area or structure to 85 percent of ASTM D1557.

3.9.2 Structures, Spread Footings, and Concrete Slabs

Compact top 12 inches of subgrades to 90 percent of ASTM D1557. Compact fill and backfill material to 90 percent of ASTM D1557.

3.9.3 Adjacent Area

Compact areas within 5 feet of structures to 90 percent of ASTM D1557.

3.9.4 Paved Areas

Compact top 12 inches of subgrades to 90 percent of ASTM D1557. Compact fill and backfill materials to 90 percent of ASTM D1557.

3.10 RIP-RAP CONSTRUCTION

Construct rip-rap on bedding material or on filter fabric in the areas indicated.

3.10.1 Preparation

Trim and dress indicated areas to conform to cross sections, lines and grades shown within a tolerance of 0.1 foot.

3.10.2 Bedding Placement

Spread filter fabric and bedding material uniformly to a thickness of at least 3 inches on prepared subgrade as indicated.

3.10.3 Stone Placement

Place rock for rip-rap on prepared bedding material to produce a well graded mass with the minimum practicable percentage of voids in conformance with lines and grades indicated. Distribute larger rock fragments, with dimensions extending the full depth of the rip-rap throughout the entire mass and eliminate "pockets" of small rock fragments. Rearrange individual pieces by mechanical equipment or by hand as necessary to obtain the distribution of fragment sizes specified above.

3.11 FINISH OPERATIONS

3.11.1 Grading

Finish grades as indicated within one-tenth of one foot. Grade areas to drain water away from structures. Maintain areas free of trash and debris. For existing grades that will remain but which were disturbed by Contractor's operations, grade as directed.

3.11.2 Topsoil and Seed

Provide as specified in Section 32 92 19 SEEDING.

3.11.3 Protection of Surfaces

Protect newly backfilled, graded, and topsoiled areas from traffic, erosion, and settlements that may occur. Repair or reestablish damaged grades, elevations, or slopes.

3.12 DISPOSITION OF SURPLUS MATERIAL

Remove from Government property surplus or other soil material not required or suitable for filling or backfilling, and brush, refuse, stumps, roots, and timber.

3.13 FIELD QUALITY CONTROL

3.13.1 Sampling

Take the number and size of samples required to perform the following tests.

3.13.2 Testing

Perform one of each of the following tests for each material used. Provide additional tests for each source change.

3.13.2.1 Fill and Backfill Material Testing

Test fill and backfill material in accordance with ASTM C136 for conformance to ASTM D2487 gradation limits; ASTM D1140 for material finer than the No. 200 sieve; ASTM D4318 for liquid limit and for plastic limit; ASTM D1557 for moisture density relations, as applicable.

3.13.2.2 Structural Fill Testing

Test select material in accordance with ASTM C136 for conformance to ASTM D2487 gradation limits; ASTM D1140 for material finer than the No. 200 sieve; ASTM D1557 for moisture density relations, as applicable.

3.13.2.3 Porous Fill Testing

Test porous fill in accordance with ASTM C136 for conformance to gradation specified in ASTM C33/C33M.

3.13.2.4 Density Tests

Test density in accordance with ASTM D1556, or ASTM D6938. When ASTM D6938 density tests are used, verify density test results by performing an ASTM D1556 density test at a location already ASTM D6938 tested as specified herein. Perform an ASTM D1556 density test at the start of the job, and for every 10 ASTM D6938 density tests thereafter. Test each lift at randomly selected locations every 2000 square feet of existing grade in fills for structures and concrete slabs, and every 2500 square feet for other fill areas and every 2000 square feet of subgrade in cut. Include density test results in daily report.

Bedding and backfill in trenches: One test per 50 linear feet in each lift.

3.13.2.5 Moisture Content Tests

In the stockpile, excavation or borrow areas, a minimum of two tests per day per type of material or source of materials being placed is required during stable weather conditions. During unstable weather, tests shall be made as dictated by local conditions and approved moisture content shall be tested in accordance with ASTM D2216. Include moisture content test results in daily report.

-- End of Section --

SECTION 31 24 00

SETTLEMENT MONITORING

PART 1 - GENERAL

1.1 SYSTEM DESCRIPTION

1.1.1 GENERAL

Work under this Section consists of furnishing all labor, equipment, and materials necessary to install, monitor and maintain as well as subsequent abandoning of settlement gauges and monitoring points required to record fill induced settlement.

Contractor shall procure the services of local personnel from a geotechnical specialty firm hereafter called the Contractor's Geotechnical Engineer to perform all required settlement analysis and data interpretation.

Contractor shall hire a firm hereinafter called Contractor's Surveyor to monitor project settlement gauges and monitoring points.

The system of settlement monitoring is to enable the Contractor's Geotechnical Engineer to observe and determine the magnitude and rate of settlement. The settlement data and monitoring gauges shall be utilized to confirm engineering analyses and to confirm that post construction total movement will be no greater than 1 inch and differential settlement between adjacent footings will be no greater than 1/2 inch.

1.2 REFERENCES

Navy - SH- Naval Sea Systems Command (Ship Systems)

HH-P-117 Packing, Jute, Twisted

1.3 RELATED SECTIONS

Sections related to this include:

Earthwork: DIVISION 31 - EARTHWORK sections.

Wick Drain System: DIVISION 31 - EARTHWORK sections.

1.4 EXPERIENCE REQUIREMENT

All other guidelines for submitting Subcontractor information shall be followed in accordance with that specified elsewhere under DIVISION 01.

1.4.1 Contractor's Geotechnical Engineer

Interpret data and release signed and sealed reporting data and plots.

Contractor's Geotechnical Engineer shall be licensed in the Commonwealth of Virginia as a professional engineer.

1.4.2 Contractor’s Surveyor

Measure settlement gauges and bench marks and release signed and sealed reporting data and plots.

Contractor's Surveyor shall be licensed in the Commonwealth of Virginia as a professional surveyor.

1.5 SUBMITTALS

Government approval is required for submittals with a "G" designation; submittals not having a "G" designation are for Contractor Quality Control approval. Submit the following in accordance with Section 01 33 00.

SD-01 Preconstruction Submittals

At least two weeks prior to proposed filling operations:

List of proposed subcontractors; G

Proposed personnel resumes identifying the specific expertise and past experience of each member of the geotechnical specialty firm to be employed for this work.

Proposed surveying personnel; G

SD-06 Test Reports

Settlement Records; G

Submit elevation measurements to the nearest 0.001 foot, at settlement monitoring locations indicated.

Submit surface settlement information to Contracting Officer the day after measurements are obtained.

Settlement Report; G

Submit at conclusion of settlement monitoring program. Report shall include settlement prediction curves and settlement data and findings of analysis that provide basis for Contractor's Geotechnical Engineer conclusion that specified settlement tolerances for fill have been achieved.

1.6 SITE CONDITIONS

Contractor shall at all times take precautions to prevent damage to settlement gauges. A suitable portable barricade shall be maintained around pipe sleeves projecting above grade during construction operations. In the event the settlement gauges become damaged, fail to function properly or in any way become unreliable through failure on the part of the Contractor to use due care in their operations, the settlement gauges shall be replaced, cleaned out, or reset as required, without any additional cost to the Government.

Provide access to settlement monitoring locations, and facilitate monitoring by temporarily stopping or interrupting certain portions of the Work as they may be required for monitoring and taking readings. Perform

monitoring and measuring in a manner that will not delay the work unnecessarily, and schedule and perform the work in a manner that will not delay monitoring and measuring.

PART 2 - PRODUCTS

2.1 EQUIPMENT

All equipment necessary for monitoring settlement shall be submitted in advance of purchasing to government for review and approval. All proposed procedures for monitoring program shall be submitted to government in advance of purchasing and installing.

2.2 SETTLEMENT GAUGES

2.2.1 Plate

Plate: 0.5 inch thick steel plate, 30 inches square.

2.2.2 Riser Pipe

Riser pipe: 1.5 inch diameter standard galvanized, steel pipe with threaded ends and couplings.

2.2.3 Sleeve Pipe

Sleeve pipe: 3 inch diameter standard galvanized, steel pipe with threaded ends and couplings.

2.2.4 End Cap

1-1/2 inch standard galvanized steel threaded cap.

2.2.5 Oakum

Commercially produced hemp or jute fiber meeting requirements of Federal Specifications HH-P-117.

PART 3 - EXECUTION

3.1 SETTLEMENT GAUGES

3.1.1 Construction Requirements

Settlement gauges and bench marks shall be furnished and installed at locations indicated on the Drawings.

Settlement plates shall be approved by the Contracting Officer before beginning any wick drain installation or embankment construction.

The first section of riser pipe shall be shop welded in position perpendicular to the steel plate and at its center.

Riser pipe shall not extend above the surface of the fill more than 5 feet.

Sections of sleeve pipe are intended to be continuous so as to prevent embankment soils from coming in contact with riser pipe as progressive lifts of fill are placed.

Sections of riser pipe in place shall be held firmly so as to prevent turning as each section of pipe is added. Each section of riser pipe shall be joined using joint compound.

Fill material shall be compacted around the sleeve pipes and bottom section of riser pipe to a radius of 3 feet in 3 inch layers with a power tamper. The power-tamped material shall be carried at least 12 inches above the adjacent fill elevation at all times.

Contractor shall keep riser and sleeve pipes plumb and cap shall be kept on the riser pipe to prevent foreign debris and water from entering during fill placement and settlement monitoring.

Sleeve and riser pipes extending above final grade shall be painted with safety yellow enamel.

The distance from the top of plate to the top of pipe shall be accurately measured and recorded by the Contractor’s surveyor.

3.1.2 Installation

Install settlement gauges subsequent to the installation of the vertical wick drains and prior to the placement of the embankment fill.

Prior to placement of the embankment fill, excavate down through the sand drainage blanket to the native in-place soils. Place a minimum 1-inch thick sand leveling course upon the native in-place soils.

Place the 0.5-inch thick steel plate upon the leveling sand.

Assure that the leveling course sand extends a minimum of 6 inches in all directions beyond the edges of the steel settlement plate.

Place end cap at the top of the riser pipe.

Restore the drainage blanket over the steel settlement plate and surrounding region.

Obtain the first measured readings of the settlement plate and end cap.

Place embankment fill as indicated.

As soon as drainage blanket and embankment soils achieves 2 feet of cover over the steel settlement plate, center sleeve pipe around the riser pipe to isolate and protect the inner pipe for subsequent readings.

Fill bottom 6 inches of first section of sleeve pipe with tightly packed Oakum as indicated, to keep sleeve centered on riser pipe and prevent intrusion of soil into annular space.

Fill material shall be compacted around bottom section of riser pipe and sleeve pipe to a radius of 3 feet in 3 inch layers with a power tamper.

The power-tamped material shall be carried at least 12 inches above the adjacent fill elevation at all times.

Progressively add both riser pipe and sleeve pipe in section increments of 5.0 feet (or other calibrated and measured increments) as embankment fill is continued to be placed, always transferring the end cap to the newest riser pipe top and obtaining new elevation readings at each time of extension addition. No embankment fill shall be placed around settlement gauges until the elevation of the top of the new riser section has been determined by Contractor's Surveyor.

Fill top 6 inches of sleeve pipe with tightly packed Oakum as indicated, prior to fill placement, to keep sleeve centered on riser pipe and prevent intrusion of soil into annular space. Remove prior to extending riser and sleeve pipe.

The Contractor shall notify the Contracting Officer a minimum of one day in advance to and immediately upon completing each installation.

Submit updated elevation readings at the end of each day’s activities to Contracting Officer.

Take precautions to prevent damage to gauges. In the event settlement gauges become damaged or material enters the annular space between sleeve and riser pipe, through failure on the part of the Contractor to use care in his operations, the settlement gauges shall be replaced, cleaned out, or reset as required, without any additional cost to the Owner.

3.1.3 Surveying

Bench marks registering their coordinate locations and elevations to the nearest 0.001 feet elevation shall be established.

Bench marks shall be located sufficiently outside of the zone of stress-settlement influence from on-going construction activities.

The method of determining elevations, along with the method of preserving control points will be subject to review and approval by Contracting Officer.

Approval shall not relieve the Contractor from the responsibility for the correctness of the survey work by the Contractor's Surveyor.

Plan cross-sections shall not be permitted as a means to establishing bench marks or initial plate elevation readings for vertical or horizontal control.

3.1.4 Settlement Readings

Once each settlement gauge is installed at its specific location, Contractor's Geotechnical Engineer will prepare a location-specific settlement curve based upon the actual fill at each settlement gauge location. Curves specific to each planned settlement gauge location will be incorporated for construction observation based upon completed design settlement predictions from backfill materials selected.

Contractor’s Surveyor shall obtain settlement readings to the nearest 0.001 foot and record with the corresponding height of fill placed at each respective settlement gauge location, daily during fill placement operations. Following completion of embankment fill placement perform elevation readings daily for a period of one week, and three times per week for the next 3 months.

Contractor's Geotechnical Engineer shall evaluate the settlement readings as they are taken to compare to the site-specific predicted settlement curves.

Readings shall continue at specified frequency until Contractor's Geotechnical Engineer advises that predicted future settlement of fill achieves specified tolerances. Contractor shall submit Settlement Report. Construction shall not recommence until findings of settlement monitoring are approved by Contracting Officer.

3.1.5 Abandoning Settlement Gauges

Upon completion of monitoring and when advised by Contracting Officer, abandon all settlement gauges in-place. Cut off and remove all steel pipe to a minimum of 3 feet below finished grade and then inject under pressure a cement-based grout via a tremie pipe into both the inner steel riser pipe and the outer steel protective sleeve until both are completely filled.

3.2 SETTLEMENT MONITORING POINTS

3.2.1 Installation

Settlement monitoring points shall be furnished and installed at locations indicated on the Drawings. Establish settlement monitoring points by marking or etching a readily observable "x" into the surface of the concrete that will permit elevation measurement by approved surveying method.

3.2.2 Settlement Monitoring Point Readings

Record elevation of settlement monitoring points to the nearest 0.001 foot at the same frequency as the settlement gauges.

-- END OF SECTION --

SECTION 31 33 34

WICK DRAIN SYSTEM
07/14

PART 1 GENERAL

1.1 MEASUREMENT AND PAYMENT

1.1.1 Installing Wick Drains

1.1.1.1 Payment

Payment will be made for costs associated with installing wick drains, which includes costs of delivery, storage and handling, trial wick drains, augering, spudding, additional subsurface investigation, automated electronic measurement and recording equipment, compiling and submitting installation records, backfilling voids around wick drains, and any other items incidental to installing wick drains to the required elevation.

1.1.1.2 Measurement

Wick drains will be measured for payment for installation on the basis of lengths, to the nearest tenth of a linear foot, along the axis of each drain acceptably in place below the top of drainage blanket.

1.1.1.3 Unit of Measure

Unit of measure: Linear foot.

1.1.2 Drainage System

The drainage system, including associated pipe, and aggregate will not be measured for payment and will be paid for on a lump sum basis, complete. Payment will be full compensation for furnishing all material, labor, equipment, supplies and incidentals to complete the work.

1.2 REFERENCES

The publications listed below form a part of this specification to the extent referenced. The publications are referred to within the text by the basic designation only.

AMERICAN ASSOCIATION OF STATE HIGHWAY AND TRANSPORTATION OFFICIALS (AASHTO)

AASHTO M 252	(2009) Standard Specification for Corrugated Polyethylene Drainage Pipe

ASTM INTERNATIONAL (ASTM)

ASTM D2487	(2011) Soils for Engineering Purposes (Unified Soil Classification System)
ASTM D448	(2012) Sizes of Aggregate for Road and Bridge Construction

ASTM D4491	(1999a; R 2014; E 2014) Water Permeability of Geotextiles by Permittivity
ASTM D4533	(2011) Trapezoid Tearing Strength of Geotextiles
ASTM D4632	(2008; E 2013; R 2013) Grab Breaking Load and Elongation of Geotextiles
ASTM D4751	(2012) Determining Apparent Opening Size of a Geotextile
ASTM D4833	(2007) Index Puncture Resistance of Geotextiles, Geomembranes, and Related Products
ASTM D4873	(2002; R 2009) Identification, Storage, and Handling of Geosynthetic Rolls and Samples

1.3 DEFINITIONS

1.3.1 Drainage Blanket Material

Aggregate which is placed to allow free transmission of wick drain outflow to lateral drains.

1.3.2 Drainage Ditch Material

Aggregate which is placed around lateral drainage pipes to collect flow from drainage blanket.

1.3.3 Embankment Fill

Soil which is placed and compacted within the neat line volume of fill as outlined on the drawings.

1.3.4 Surcharge Fill

Soil which is temporarily placed and compacted above permanent fill within the neat line volume of surcharge as outlined on the plans.

1.3.5 Wick Drain

A geotextile-polymer core composite installed vertically into a compressible subsoil to facilitate pore water drainage and promote an increased rate of consolidation during a specified settlement period.

1.3.6 Drainage Pipe

Pipe placed in drainage ditch to transmit wick drain outflow to daylight location(s) as indicated.

1.3.7 Settlement Gauge

A device installed prior to fill placement and extended upward during fill placement to remain above grade at all times, used to measure the settlement of the fill for a specified period of time.

1.4 SYSTEM DESCRIPTION

Work under this Specification consists of furnishing all labor, equipment and materials necessary to install vertical wick drains, and lateral drains required to complete a drainage system as indicated.

The area to be treated by the installation of vertical wick drains shall be as indicated. All wick drains shall penetrate to the depth indicated. The depth of the treatment shall be from elevation of the drainage blanket to the tip elevation indicated on the drawings.

Lateral drains shall extend to external surface drainage and discharge freely.

Embankment instrumentation consisting of settlement gauges shall be constructed where indicated.

1.5 RELATED SECTIONS

Sections related to the Wick Drain System include:

a. Earthwork: DIVISION 31 Earthworks sections.

b. Settlement Monitoring: DIVISION 31 Earthworks sections.

1.6 BID CRITERIA

Visit the Site prior to bidding to observe and review specific Site conditions and requirements for equipment, methods, and costs to install wick drain system as described herein.

1.7 SUBMITTALS

Government approval is required for submittals with a "G" designation; submittals not having a "G" designation are for Contractor Quality Control approval. The following shall be submitted in accordance with Section 01 33 00 SUBMITTAL PROCEDURES:

SD-02 Shop Drawings

Detailed Drawings; G

SD-03 Product Data

Drainage Pipe Calculations; G

SD-04 Samples

Wick Drain

SD-07 Certificates

Certificates of Compliance; G

SD-11 Closeout Submittals

Construction Records; G

1.8 QUALITY ASSURANCE

1.8.1 Manufacturer Representative

Provide a qualified and experienced representative from the wick drain and horizontal drain pipe manufacturer available on an as-needed basis during the construction. The representative shall visit the Site for consultation as requested by the Contracting Officer.

1.9 DETAILED DRAWINGS AND CONSTRUCTION RECORDS

1.9.1 Detailed Drawings

Submit at least two weeks prior to plans to mobilize equipment to the site drawings indicating fabrication and installation details for the wick drain system, including sequencing and construction procedures. If approved by the Contracting Officer, shop drawings may consist of marked up contract drawings showing exact dimensions for the drainage system components supplied, and other minor revisions. Drawings for the wick drain system shall be subject to the following:

a. All features indicated in the contract documents shall be incorporated in the final construction.

b. Size, type, weight, maximum pushing force, and configuration of the installation rig.

c. Dimensions and length of mandrel.

d. Details of wick drain anchor.

e. Detailed description of proposed installation procedures.

f. Proposed methods for overcoming obstructions.

g. Layout plan shall assign a numeric or alphanumeric label to all wick drains.

h. Layout plan shall indicate the planned location and elevations for all wick drains and horizontal drains as indicated.

i. Layout plan shall indicate drainage blanket and working elevation for all areas of treatment.

j. Approval of the layout plan will not relieve the Contractor of his responsibilities to install wick drains in accordance with the drawings and specifications. If, at any time, the Government considers that the method of installation does not produce a satisfactory wick drain, the Contractor shall alter his method and/or equipment as necessary.

1.9.2 Construction Records

During wick drain installation submit daily to Contracting Officer, a record of each wick drain placed, including, but not limited to:

a. Name of earthwork or building structure.

b. Drawing numbers corresponding to wick drain detail and location.

c. Wick drain number.

d. Alignment of installation rig mast (vertical or battered with angle).

e. Date and start and stop time of advancement.

f. Nature and location of obstructions, if encountered.

g. Wick drain length installed.

h. Wick drain length below working elevation.

i. Crowd force plotted with depth below working elevation.

j. As-built elevation data (subgrade, wick drain tip and cutoff). Note compliance with installation tolerances.

k. As-built location coordinates of wick drains in accepted format.

l. Remarks concerning installation of wick drains.

If using automated measuring and recording equipment, also provide the following information:

a. Wick drain penetration rate (feet per minute) versus depth.

b. Mandrel crowd force and/or line pressure verses depth.

Submit to Contracting Officer a printed copy of automated electronic measurement and recording equipment output as described in this Section for all wick drains installed in the past 24 hours. This data will be used for field evaluation to verify target depth has been reached.

Provide to Contracting Officer a copy of electronic raw data from the automated electronic measurement and recording equipment for all wick drains installed in the past 24 hours in an Excel spreadsheet or other accepted format.

1.9.3 Classification of Soil Materials

Classify when applicable soil materials in accordance with ASTM D2487 to verify compliance with vendor specifications for proper usage of products incorporated into Contractor's Work. Alternate method of soil classification may be proposed by Contractor as required for verification with vendor specifications. Alternate method of soil classification is subject to approval by Contracting Officer. All pertinent vendor specifications shall be provided to Contracting Officer with proposed alternate method of soil classification. All testing completed by the Contractor in conjunction with soil material classification will be considered incidental to the contract work.

1.10 DELIVERY, STORAGE, AND HANDLING

Check products upon delivery to assure that the proper material has been received and is undamaged. Protect the materials from damage and exposure following the guidelines presented in ASTM D4873. Contract Officer may reject material that is damaged during shipment, storage or handling; or which does not meet the minimum requirements of the wick drain material.

1.10.1 Labeling

Label each roll with the manufacturer's name, product identification, roll dimensions, lot number, and date manufactured.

1.10.2 Handling

Wick drain spools shall be handled by hand, or with load carrying straps, a fork lift with a stinger bar, or an axial bar assembly. Wick drain spools shall not be dragged, lifted by one end, lifted by cables or chains, or dropped to the ground.

1.10.3 Storage

Protect wick drain from cement, paint, excessive mud, chemicals, sparks and flames, temperatures in excess of 160 degrees F, and any other environmental condition that may degrade the physical properties. If stored outdoors, elevate the spools from the ground surface. Protect wick drain with an opaque waterproof cover. Deliver wick drain to the Site in a dry and undamaged condition. Wick drain shall not be exposed to direct sunlight for more than 7 days.

PART 2 PRODUCTS

2.1 WICK DRAINS

Submit Certificates of Compliance for the materials. Submit an affidavit certifying that the wick drain meets the project specifications. The affidavit shall be signed by an official authorized to certify on behalf of the manufacturer and shall be accompanied by a mill certificate that verifies physical properties were tested during manufacturing and lists the manufacturer's quality control testing. If the affidavit is dated after award of the contract and/or is not specific to the project, the supplier shall attach a statement certifying that the affidavit addressed to the wholesale company is representative of the material supplied.

Submit Sample of the wick drain material. The samples shall be stamped or labeled by the manufacturer as being representative of the wick drain material having the specified trade name and shall have a minimum length of 5 feet. Approval of the sample material shall be required prior to site delivery of the wick drain material. The Contractor shall submit wick drain samples and indicate the source of the proposed materials prior to delivery to the Site and shall allow sufficient time to evaluate the material.

Wick drains shall be a prefabricated type with a corrugated plastic drainage core wrapped on all sides with non-woven synthetic geotextile filter fabric. The geotextile wrap shall be tight around the core and shall be securely seamed in a manner that will not introduce any new materials nor present an obstruction that will impede the flow in the channels of the core.

The wick drains shall be free of defects, rips, holes, or flaws. During shipment, the wick drain shall be protected from damage. During storage on site, the storage area shall be such that the wick drain is protected from sunlight, mud, dirt, debris, and detrimental substances. Manufacturer certification shall be provided for all wick drain material delivered to Site.

The non-woven geotextile wrap shall conform to the following specifications:

Test Item	Designation	MARV*
Grab Tensile Strength	ASTM D4632	130 lb.
Trapezoidal Tear	ASTM D4533	60 lb.
Puncture Strength	ASTM D4833	40 lb.
Permittivity	ASTM D4491	0.7 sec^{-1}
Apparent Opening Size	ASTM D4751	210 micron

*The property values (except for AOS) represent minimum average roll values in the weakest principal direction. Jacketing wrap material shall be tested in saturated and dry conditions.

One single type of assembled wick drain shall be used on the project unless otherwise specified or approved by the Contracting Officer.

The wick drain shall be band-shaped with an aspect ratio (width divided by thickness) not exceeding 50.

Prefabricated wick drains to promote continuous vertical drainage meeting these specifications acceptable for installation shall be products from the following or approved equal:

a. Alidrain

b. Ameridrain

c. Mebradrain

d. Soil Drain

2.2 AGGREGATES

The material shall be free of ice; snow; frozen earth; trash; debris; sod; roots; organic matter; contamination from hazardous, toxic or radiological substances. Each material shall be obtained entirely from one borrow source, unless the Contracting Officer determines that quality control is adequate and the alternate source produces material that is similar in gradation, texture, and interaction with the wick drains. All materials shall be of a character and quality satisfactory for the purpose intended.

a. Drainage ditch material shall meet the requirements of ASTM D448, size No. 7.

b. Drainage blanket material shall meet the requirements of ASTM D448, size No. 9.

2.3 DRAINAGE PIPE

The drainage pipe shall be corrugated polyethylene pipe meeting requirements of AASHTO M 252. All pipe shall be capable of withstanding anticipated loads due to construction equipment and fill materials per manufacturer recommendations. Submit calculations demonstrating lateral drainage pipe section(s) is adequate to meet these requirements. All fill materials shall be classified according to this Section as required to verify manufacturer recommendations.

2.4 WICK DRAIN INSTALLATION EQUIPMENT

Wick drains shall be installed using a mandrel, which shall be pushed through the drainage blanket and into the soil with a continuous static movement, and vibrated or driven in accordance with manufacturer's recommendations.

Equipment used to push mandrel and wick drains for installation shall be in proper working condition and provide an adequate static force to set all wick drains to the depth indicated.

Mandrel shall protect the wick material from tears, cuts, and abrasions during installation; and shall be rectangular in shape; and of a cross sectional area not to exceed 10 square inches.

Provide anchor plate at bottom of mandrel to cover mandrel end and prevent soil from entering mandrel or wick drain during installation through all soils. Anchor plate shall be sufficient strength and rigidity to anchor wick drain at required depth during mandrel removal.

2.5 AUTOMATED ELECTRONIC MEASUREMENT AND RECORDING EQUIPMENT

Automated electronic measurement instrumentation may be supplied by the Contractor to monitor wick drain installation. The following measurements shall be recorded versus depth of the wick drain anchor point at 2-foot increments over the entire length of wick drain installation:

a. Wick drain penetration rate (feet per minute).

b. Mandrel crowd force and/or line pressure.

Calibration shall be made on all measuring and recording equipment at the beginning of the project to demonstrate that the values indicated by the automated equipment are within 3% of the values reported in the output. Calibrations shall be performed in accordance with the equipment manufacturer's specifications. All measuring and recording equipment shall be recalibrated when Contracting Officer suspects that the performance has changed.

Digital records shall be made of all acquired raw data and made available to the Contracting Officer in an Excel spreadsheet or other accepted format.

Mandrel crowd force or line pressure measurement shall be clearly displayed to guide the Contractor during wick drain installation.

PART 3 EXECUTION

3.1 SITE PREPARATION

Prior to installation of the vertical wick drains complete all site preparation as indicated.

3.2 LATERAL DRAIN INSTALLATION

Excavate drainage ditches, install drain pipe and backfill ditches to true grades and alignment with a continuous fall in the direction of flow as indicated. The interior of the pipe shall be kept clean from soil and debris; and open ends shall be temporarily capped as necessary.

3.3 DRAINAGE BLANKET

Place drainage blanket material to lines and grades indicated.

3.4 VERTICAL WICK DRAIN INSTALLATION

Prior to the installation of wick drains or the mobilization of equipment to the Site, perform the following:

a. Prepare a drawing with each planned wick drain identified and located. Wick drain layout plan shall avoid conflicts with existing abandoned pile foundations. Maintain minimum wick drain spacing indicated.

b. Identify the location of all planned settlement gauges relative to wick drain positions and other planned construction activities.

c. Settlement gauges shall be installed within the middle of the triangular spacing of a wick drain pattern in order to avoid all potential conflicts.

Install wick drains in a triangular pattern, at such spacings and to such tip elevations as indicated. Contractor may complete additional borings at their risk to determine the required depth of wick drains.

a. Contractor's Subsurface Investigation: Provide a plan at least 2 weeks prior to commencement of any Site construction activities or the mobilization of any planned drilling rig for approval by the Contract Officer that depicts the planned location for additional borings to be performed by the Contractor.

   1. Additional borings or cone penetrometer (CPT) soundings may be used by Contractor in-lieu of automated electronic measurement to verify depth of wick drain as indicated has been reached.

   2. A minimum of 10 borings and/or CPTs shall be implemented in Contractor's subsurface investigation.

   3. Contractor shall submit wick drain installation plan based on findings of additional investigation at least 1 week prior to commencement of any wick drain installations.

   4. Wick drain installation plan based on findings of Contractor's subsurface investigation shall include cross sections at no greater than 100 foot spacing along treatment area, depicting depth of wick drains.

Locate, number, and stake the wick drains as indicated on the Drawings. Take all reasonable precautions to protect and preserve the stakes and/or flagging. The drainage blanket shall have sufficient compaction to provide a stable working surface. The locations of the installed wick drains shall not vary by more than 6 inches from the locations indicated.

Construction of the lateral drain system shall be completed prior to placement of drainage blanket material.

Install the wick drains subsequent to the construction of the drainage blanket and prior to placement of embankment instrumentation and embankment fill. Wick drains shall be cut such that at least a 6-inch length protrudes above the top of the drainage blanket at each wick drain location.

Demonstrate that equipment, methods, and materials produce a satisfactory installation. For this purpose, install several trial wick drains at locations within the work area, as designated by the Contracting Officer. Trial wick drains conforming to these specifications will be paid for at the same unit price as the production wick drains.

a. Trial wick drain installations will be observed by the Contracting Officer.

b. Installation shall exhibit the ability to install a wick drain to the indicated tip elevation in accordance with this Section.

Wick drains that deviate from the intended drawing location by more than 6 inches, or that are damaged or improperly installed will be rejected. Rejected wick drains may be removed or abandoned in place, at the Contractor's option. Offset replacement wick drains approximately 18 inches from the location of the rejected wick drain as directed by the Contracting Officer. All rejected wick drains will be replaced at the Contractor's expense.

Install wick drains with equipment which will cause a minimum of disturbance to the drainage blanket or the subsoil during the installation. Install wick drains by pushing or vibrating the mandrel through the soils to the required depth. Jetting shall not be permitted for installation of the wick drain, except with the approval of the Contracting Officer, and then to lubricate the mandrel when working in highly plastic clays.

Install wick drains vertically with a tolerance of not more than 0.25 inches per foot. Carefully check the equipment for the plumbness and provide to the Contract Officer a suitable means of both verifying the plumbness of the mandrel and of determining the depth of the wick drain.

Where obstructions are encountered within the compressible clay layer which cannot be penetrated by augering or spudding, abandon the hole. At the direction of the Contract Officer, install a new wick drain no more than 18 inches from the obstructed wick drain. A minimum of two attempts shall be made to install a new wick drain. If the wick drain still cannot be installed to the design tip elevation, the wick drain location shall be abandoned and the installation equipment should be moved to the next wick drain location. Such obstructed wick drains will be paid for at the unit price per foot for productive wick drains.

Augering may be used to loosen stiff upper soils prior to installation of wick drains provided such operations do not extend more than 2 feet below the drainage blanket subgrade elevation. All holes or voids created from such augering operations shall be filled with drainage blanket material after the wick drain is satisfactorily installed.

During installation, provide suitable surface reference elevation and a means of measuring the vertical length of each wick drain installed at a given wick location in order to derive the tip elevation for each wick drain.

Splices or connections in the wick drain material will not be allowed.

Provide to Contract Officer at the end of each working day a summary of the total amount of vertical wick drains installed that day.

Install wick drains with continuous push using static weight or vibration with a mandrel penetration rate appropriate for the soils encountered; but generally range between 0.5 to 2.0 feet per second.

3.5 PROTECTION

Work shall be protected against damage from subsequent operations.

-- End of Section --

SECTION 31 62 13.20

PRECAST/PRESTRESSED CONCRETE PILES
08/09

PART 1 GENERAL

1.1 REFERENCES

The publications listed below form a part of this specification to the extent referenced. The publications are referred to within the text by the basic designation only.

AMERICAN CONCRETE INSTITUTE INTERNATIONAL (ACI)

ACI 211.1	(1991; R 2009) Standard Practice for Selecting Proportions for Normal, Heavyweight and Mass Concrete
ACI 214R	(2011) Evaluation of Strength Test Results of Concrete
ACI 304R	(2000; R 2009) Guide for Measuring, Mixing, Transporting, and Placing Concrete
ACI 315	Details and Detailing for Concrete Reinforcement
ACI 318	(2011) Building Code Requirements for Structural Concrete and Commentary
ACI SP-66	(2004) ACI Detailing Manual

AMERICAN WELDING SOCIETY (AWS)

AWS D1.4/D1.4M	(2011) Structural Welding Code - Reinforcing Steel

ASTM INTERNATIONAL (ASTM)

ASTM A 416	(2012) Standard Specification for Steel Strand, Uncoated Seven-Wire for Prestressed Concrete
ASTM A 615/A 615M	(2014) Standard Specification for Deformed and Plain Carbon-Steel Bars for Concrete Reinforcement
ASTM A 1064/A 1064M	(2013) Standard Specification for Steel Wire, Plain, for Concrete Reinforcement
ASTM C 1202	(2012) Standard Test Method for Electrical Indication of Concrete's Ability to Resist Chloride Ion Penetration
ASTM C 1218/C 1218M	(1999; R 2008) Standard Specification for Water-Soluble Chloride in Mortar and Concrete

ASTM C 1240	(2014) Standard Specification for Silica Fume Used in Cementitious Mixtures
ASTM C 1260	(2007) Standard Test Method for Potential Alkali Reactivity of Aggregates (Mortar-Bar Method)
ASTM C 136	(2006) Standard Test Method for Sieve Analysis of Fine and Coarse Aggregates
ASTM C 143	(2012) Standard Test Method for Slump of Hydraulic-Cement Concrete
ASTM C 150	(2012) Standard Specification for Portland Cement
ASTM C 1567	(2013) Standard Test Method for Potential Alkali-Silica Reactivity of Combinations of Cementitious Materials and Aggregate (Accelerated Mortar-Bar Method)
ASTM C 171	(2007) Standard Specification for Sheet Materials for Curing Concrete
ASTM C 172	(2014) Standard Practice for Sampling Freshly Mixed Concrete
ASTM C 231	(2009a) Standard Test Method for Air Content of Freshly Mixed Concrete by the Pressure Method
ASTM C 260	(2010a) Standard Specification for Air-Entraining Admixtures for Concrete
ASTM C 309	(2007) Standard Specification for Liquid Membrane-Forming Compounds for Curing Concrete
ASTM C 31	(2012) Standard Practice for Making and Curing Concrete Test Specimens in the Field
ASTM C 33	(2013) Standard Specification for Concrete Aggregates
ASTM C 39	(2014a) Standard Test Method for Compressive Strength of Cylindrical Concrete Specimens
ASTM C 494	(2013) Standard Specification for Chemical Admixtures for Concrete
ASTM C 618	(2012a) Standard Specification for Coal Fly Ash and Raw or Calcined Natural Pozzolan for Use in Concrete
ASTM C666/C666M	(2003; R 2008) Resistance of Concrete to Rapid Freezing and Thawing

ASTM C 989	(2013) Standard Specification for Ground Granulated Blast-Furnace Slag for Use in Concrete and Mortars
ASTM D4945	(2012) High-Strain Dynamic Testing of Piles

PRECAST/PRESTRESSED CONCRETE INSTITUTE (PCI)

PCI JR-382	(1993) Recommended Practice for Design, Manufacture and Installation of Prestressed Concrete Piling
PCI MNL-116	(1999) Manual for Quality Control for Plants and Production of Structural Precast Concrete Products, 4th Edition
PCI STD-112	(1984) Standard Prestressed Concrete Piles Square, Octagonal and Cylinder

1.2 Unit Prices

1.2.1 Driving Prestressed Concrete Piles

1.2.1.1 Payment

Payment will be made for costs associated with driving permanent prestressed concrete piles, which includes costs of handling, driving, mobilization, demobilization, pre-drilling and splicing of piles, additional work required for performing dynamic and/or static pile load testing where indicated, measuring heave, redriving heaved piles, pulled piles, removal of build-ups, driving heads or cutting off piles at the cut-off elevation and removing from the work site, compiling and submitting pile driving records, backfilling voids around piles, and any other items incidental to driving piles to the required elevation.

1.2.1.2 Measurement

Permanent prestressed concrete piles will be measured for payment for driving on the basis of lengths, to the nearest tenth of a linear foot, along the axis of each pile acceptably in place below the cut-off elevation shown.

1.2.1.3 Unit of Measure

Unit of measure: Linear foot.

1.2.2 Pile Dynamic Testing (PDA)

1.2.2.1 Payment

Payment for each acceptably provided complete dynamic testing of a single pile will be made at the contract unit price per test, which price shall include furnishing, placing and removing testing equipment and completion of GRLWEAP and driving analyses (CAPWAP).

1.2.2.2 Measurement

Pile Dynamic Testing will be measured for payment on the basis of each test performed.

1.2.2.3 Unit of Measure

Unit of Measure: Each

1.2.3 Prestressed Concrete Test Piles

1.2.3.1 Payment

Payment will be made for costs associated with furnishing, delivering, and driving of test piles, including splices; conducting pile dynamic tests (PDA); backfilling voids around piles; compiling pile driving test records; interpreting data; and submitting reports.

1.2.3.2 Measurement

Prestressed concrete pile driving tests will be measured for payment on the basis of the applicable contract unit price per test pile.

1.2.3.3 Unit of Measure

Unit of measure: Each.

1.3 PILE REQUIREMENTS

Provide precast prestressed concrete piles, PCI JR-382. Production of piles shall be in accordance with PCI MNL-116. The Contractor's Geotechnical Engineer will determine and list "calculated" tip elevations or driving resistance for each pile from test pile data. This information will be given to the Contracting Officer no later than 7 days from receipt of complete test data. Use this list as the basis for ordering the piles. Do not order piles until list is approved by the Contracting Officer. Test piles shall be 10 feet longer than the length shown on the Drawings.

1.4 SUBMITTALS

The following shall be submitted in accordance with Section 01 33 00 SUBMITTAL PROCEDURES:

Prefabrication Submittals for Piles (at least two weeks prior to piling fabrication).

SD-01 Preconstruction Submittals

Installation Procedures; G

Wave Equation Analysis; G

Pile Driving Layout and Sequencing; G

Show the location, identification, order and orientation in which piles will be driven, and describe how the sequence will minimize piles from being displaced laterally when driving subsequent piles. It is intended that all test piles be installed at final production pile locations as indicated, uniformly distributed across the site, driven in a sequential manner by the Contractor in order to minimize their impact to other work activities at the Site and so as to permit ease of access to subsequent production piles. The location and sequence of driving

of the test piles is subject to review and approval by the Contracting Officer.

Provide submittals addressing each of the following items:

Concrete Records; G

Concrete records for each member indicating date, time, and duration of casting, mix proportions, mixing water corrections, slump, air content, method of curing, ambient temperature during curing, duration of curing, concrete strength at time of detensioning, 28-day concrete strength.

Tensioning and Detensioning Records; G

Submit tensioning and detensioning records indicating data and time of each load, stress, and elongation of strand group under loading and unloading.

Precasting manufacturer's quality control procedures; G

Submit concrete cylinder compressive strength test results.

Certificates; G

Order List; G

Pile Driving Log; G

Provide instructions and procedures on how the Contractor will assist the Government in the processes of Dynamic Pile Testing, Inspection and Monitoring of piles during installation and testing.

SD-02 Shop Drawings

Piles; G

Indicate erection details, build-up details, splice details including type, location and strength, and special embedded or attached lifting devices. Indicate pick-up and support points for piles. Reinforcing details shall conform to ACI 315; G.

SD-03 Product Data

Pile Driving Equipment; G
(At least 30 days prior to commencement of work)

a. Make and model of pile-driving hammer.

b. Weight, dimensions, stiffness, and coefficient of restitution of cap block assembly (helmet and hammer cushion); dimensions, stiffness, coefficient of restitution, and type of material of cushion (pile cushion)

c. Cushion stiffness shall be determined as:

$$S = \frac{AE}{L}$$

Where:
S = Cushion Stiffness
A = Cushion area
E = Secant modulus of elasticity of cushion material
L = Length or height of cushion

d. Leads

e. Extractors

f. Predrilling equipment

Diameter of hole, predrill depth, method and equipment.

SD-05 Design Data

Concrete Mix Design; G

Submit a concrete mix design before concrete is placed, for each type of concrete used for the piles.

SD-06 Test Reports

Aggregate; G

Compressive Strength; G

Slag; G

Dynamic Pile Analysis; G

Submit a summary report of dynamic test results for all test piles prior to production pile driving. For production piles, submit a field summary report within two (2) days of testing. Submit a report summarizing the results of dynamic testing of production piles on a monthly basis.

SD-07 Certificates

Submit certification test reports for manufacturer's supplied cement, silica fume, concrete compressive strength, aggregates, admixtures, curing materials, reinforcing steel, and strand steel. Aggregate certification shall include gradation and quality results. Admixture certification shall include types and quantities to be used during fabrication. Additional certificates if applicable:

Admixtures

Silica fume manufacturer's representative

Prestressing steel

Cement

Fly ash and Pozzolan

Ground Slag

Design Data

SD-11 Closeout Submittals

Pile records; G

During pile driving, submit records to Contracting Officer, each day, to include the following for each pile:

a. Name of structure and pile number.

b. Driven pile length.

c. Pile length after cutoff.

d. Pile cutoff and tip elevations.

e. Ground surface elevation during driving.

f. Continuous driving resistances, including final driving resistances, and pressure gauge readings or hammer ram stroke.

g. Hammer speed in blows per minute during driving.

h. Date and time of day pile driven.

i. Make and model of pile-driving hammer, along with associated capblock cushion material type(s) and dimensions.

j. Time required to drive pile.

k. Predrilling diameter and depth.

l. Heaving or redriving data.

m. Remarks concerning pile-driving operations.

n. Pile location deviations.

1.5 QUALITY ASSURANCE

1.5.1 Experience Qualifications

Piling fabricator shall have been regularly engaged in the production of prestressed reinforced concrete piles for a period of not less than five years, and show a quality capability through certification in the PCI Plant Certification Program or through an established quality control program based on PCI MNL 116.

Piling installation Subcontractor shall have a minimum of five years' experience installing prestressed concrete piles.

Names of piling fabricator and installation Subcontractor along with their experience statements of past specified work shall be submitted at the time of Bid and will be considered in the evaluation of Bids.

Contractor's Geotechnical Engineer shall have been regularly engaged in the production, testing, and monitoring of prestressed piles for a period of not less than five years. Contractor's Geotechnical Engineer shall be well

versed in the use of CAPWAP and GRLWEAP analyses. Contractor's Geotechnical Engineer shall operate Pile Driving Analyzer in the field and be certified at a minimum level (BASIC) to perform all monitoring and reporting activities.

1.5.2 Piles

Prepare in accordance with ACI SP-66. Indicate placement of reinforcement including tendons. Indicate location of special embedded or attached lifting devices, employment of pick-up points, support points other than pick-up points, and any other methods of pick-up. Provide Design Data and certification by a Professional Engineer registered in the jurisdiction of the U.S., that layout and details of reinforcement and tendons conform with that shown on the structural design drawings. Provide prefabrication submittals for Piles a minimum of two weeks prior to piling fabrication.

1.5.3 Quality Control Procedures

Submit the precasting manufacturer's quality control procedures and inspection records established in accordance with PCI MNL-116.

Provide ground surface elevation reference and mark each pile along its entire length at 1-foot intervals and along at least the last foot of driving at 1-inch increments, so as to permit determination of pile tip elevation and corresponding driving resistances during driving.

1.5.4 Installation Procedures

a. Submit information on the type of equipment proposed to be used, proposed methods of operation, pile driving layout and sequencing, and details of all pile driving equipment and accessories.

b. Provide details of pile driving equipment and a Wave Equation Analysis of pile drivability for selection of the hammer along with a statement of driving procedures. The Wave Equation Analysis is to be completed by the Contractor's Geotechnical Engineer for each test pile location where different subsurface conditions exist and is to include the following information pertaining to the proposed pile driving equipment:

   (1) Complete Pile and Driving Equipment Data Form, located at the end of this section, for each proposed pile hammer and pile type combination.

   (2) Copies of computer input and output sheets and graphs showing soil resistance versus blow count as well as maximum tension and compression stresses versus blow count. Analysis shall be run at the estimated tip elevation as well as other required elevations to define maximum stress levels in the pile during driving.

c. Provide detailed procedures and equipment to be used for conducting the dynamic pile load tests. The detailed description shall explain how specific information of pile performance will be evaluated.

1.5.5 Concrete Mix Design

Certify, using a Government-approved independent commercial testing laboratory, that proportioning of mix is in accordance with ACI 211.1 or ACI 318 for specified strength and is based on aggregate data which has been determined by laboratory tests during last twelve months. Submit a

complete list of materials including type; brand; source and amount of cement, fly ash, pozzolan, ground slag, and admixtures; and applicable reference specifications. Submit additional data regarding concrete aggregates if the source of aggregate changes. Submittal shall clearly indicate where each mix design will be used when more than one mix design is submitted.

1.5.6 Silica Fume Manufacturer's Representative

Provide statement that the manufacturer's representative will be present at plant to ensure proper mix, including high range water reducer (HRWR), and batching methods.

1.6 DELIVERY, STORAGE, AND HANDLING

Piles shall be stored, handled, and transported in accordance with PCI MNL-116 and additionally as follows. Methods used for handling and storage of piles shall be such that the piles are not subjected to excessive bending stress, cracking, spalling, or other damage.

a. Unless special lifting devices are attached for pick-up, mark pick-up points clearly and plainly on all piles after removal of forms, and perform all lifting at these points.

b. Lift and handle piles by a suitable bridge or sling where required, which shall be attached to pick-up points.

c. Provide special care in handling and transporting concrete piles to prevent any appreciable buckling of the pile or cracking of concrete.

d. Stabilize storage areas for prestressed piles and provide a suitable base so that differential movements or twisting of piles shall not occur.

e. Stacked piles will not be permitted unless Contractor provides appropriately separated and supported battens placed across the full width of each bearing point.

f. Arrange battens used for storage of piles in vertical planes at a distance not greater than the width of the pile from designated pick-up points.

1.6.1 Damaged Piles

The Contractor shall inspect each pile for sweep and structural damage such as cracking and spalling before transporting them to the project site and immediately prior to placement in the driving leads. Any unusual cracks (cracks other than crazing, surface drying, shrinkage cracks and end cracks) shall be brought to the attention of the Contracting Officer. Piles which are damaged during delivery, storage, or handling to the extent they are rendered unsuitable for the work, in the opinion of the Contracting Officer, shall be rejected and removed from the project site, or may be repaired, if approved, at no cost to the Government.

1.6.1.1 Repairable Cracks

Piles with cracks equal to or greater than 0.006 inches but less than 0.06 inches shall be rejected or repaired. As an alternate to pile rejection, the Contractor may submit a proposal to repair deficient piles, which shall

be restored prior to driving to provide its required design capacity, perform its intended function in the structure, and take into consideration long term durability in corrosive environment.

1.6.1.2 Non-Repairable Cracks

Piles with cracks equal to or greater than 0.06 inches shall be rejected.

1.6.2 Pile Sweep

Sweep shall be limited to 1/8 inch per 10 feet over the length of the pile. Piles having excessive sweep shall be rejected.

PART 2 PRODUCTS

2.1 MATERIALS

2.1.1 Cementitious Materials

Cementitious materials shall be portland cement, blended cement or portland cement in combination with natural pozzolan or fly ash and conforms to appropriate specifications listed below.

2.1.1.1 Cement

ASTM C 150, Type II with a maximum alkali content Of 0.40 percent blended cement except as modified herein. The blended cement shall consist of a mixture of ASTM C 150 cement with alkali content not exceeding 0.40 percent and one of the following materials: ASTM C 618 pozzolan or fly ash, or ASTM C 989 ground iron blast-furnace slag, or ASTM C 1240 silica fume. If no satisfactory test results are available, made within the past six months to prove that the cement alkali content is less than 0.40 percent, then cement with a maximum of 0.60 percent alkali shall be used. Cement certificates shall include test results in accordance with ASTM C 150, including equivalent alkalies indicated in the optional chemical requirements. Use cement with a tricalcium aluminate (C3A) content of less than 8 percent. Type III cement shall not be used in conjunction with silica fume. Type IV cement shall not be used.

2.1.1.2 Fly Ash and Pozzolan

ASTM C 618, Class N, or F except that the maximum total alkalies shall be 3.0 percent, and the maximum allowable loss on ignition shall be 3 percent. If the aggregates are reactive, the maximum calcium oxide content shall be 13.0 percent. Class C shall not be used.

2.1.1.3 Ground Iron Blast-Furnace Slag

ASTM C 989, Grade 120. 2.1.1.4 Silica-Fume ASTM C 1240, provide silica fume that is a by-product of silicon or ferrosilicon production. Provide percent by weight of the total cementitious materials as indicated in the table below.

2.1.1.4 Supplemental Cementitious Materials (SCM) Content

The concrete mix shall contain one of the SCMs listed below, or a linear combination thereof.

SUPPLEMENTARY CEMENTITIOUS MATERIALS CONTENT

SCM	Minimum Content	Maximum Content
Class N Pozzolan or Class F Fly Ash with SiO_2 plus Al_2O_3 plus Fe_2O_3 greater than 70 percent	25 percent	35 percent
Class N Pozzolan or Class F Fly Ash with with SiO_2 plus Al_2O_3 plus Fe_2O_3 greater than 80 percent	20 percent	35 percent
Class N Pozzolan or Class F Fly Ash with with SiO_2 plus Al_2O_3 plus Fe_2O_3 greater than 90 percent	15 percent	35 percent
GGBF Slag	30 percent	50 percent
Silica Fume	5 percent	10 percent

2.1.2 Water

Water shall be fresh, clean, and potable; free from injurious amounts of oils, acids, alkalis, salts, organic materials, or other substances deleterious to concrete or steel.

2.1.3 Aggregates

ASTM C 33, except as modified herein. Provide aggregate free from any substance which may be deleteriously reactive with alkalies in cement in an amount sufficient to cause excessive expansion of concrete. Do not mix, store in same stockpile, or use fine aggregates from different sources of supply in same concrete mix or same structure without approval. Fine aggregate shall consist of clean, natural sand or hard, dense, durable, uncoated rock particles and shall be free from injurious amounts of silt, loam, lumps, soft or flaky particles, shale, alkali, organic matter, mica, and other deleterious substances. The fineness modulus of fine aggregate shall be not less than 2.40 or greater than 3.0. For piles that will be exposed to freezing and thawing, fine and coarse aggregate subjected to five cycles of the sodium sulfate soundness test shall show a loss not greater than 10 percent. If the selected aggregates fail the soundness test, the Contractor may use the aggregate source, provided concrete specimens made with the aggregates to be used for the piles shall have a durability factor of not less than 80 based on 300 cycles of freezing and thawing when tested in accordance with ASTM C666/C666M. Prior to pile fabrication, submit certified test reports for the following tests specified in ASTM C 33,in addition, twice during each shift when the concrete plant is operating, the gradation of each size of aggregate shall be tested in accordance with ASTM C 136:

a. Grading

1. Amount of material finer than No. 200 sieve

2. Organic impurities

3. Soundness

4. Clay lumps and friable particles

5. Coal and lignite

6. Weight of slag

7. Abrasion of coarse aggregate

8. Fineness modulus

9. Reactive aggregates

10. Freezing and thawing

2.1.3.1 Alkali-Silica Reactivity (ASR)

Fine and coarse aggregates to be used in all concrete shall be evaluated and tested by the Contractor for alkali-aggregate activity. The fine and coarse aggregates shall be evaluated separately, using ASTM C 1260. Test results of the individual aggregates shall have a measured expansion equal to or less than 0.08 percent at 16 days after casting. Should the test data indicate an expansion of greater than 0.08 percent, the aggregates(s) shall be rejected or additional testing, using ASTM C 1567, shall be performed as follows: utilize the Contractor's proposed low alkali cement and SCM in combination with the proposed aggregate for the test portioning. The SCM quantity shall be determined that will meet all the requirements of these specifications and that will lower the ASTM C 1567 expansion to equal or less than 0.08 percent at 16 days after casting. If the above option does not lower the expansion to less than 0.08 percent at 16 days after casting, reject the aggregate(s) and submit new aggregate sources for retesting. Submit the results of testing to the Contracting Officer for evaluation and acceptance.

2.1.4 Admixtures

a. Chemical admixtures, if used for water reducing, shall conform to ASTM C 494, Type A or Type F.

b. Chemical admixtures, if used for water reducing and retarding set, shall conform to ASTM C 494, Type D or Type G.

c. Air-entraining admixture shall conform to ASTM C 260. Do not use admixtures containing chlorides.

2.1.5 Curing Materials

a. Curing materials, if used, shall conform to ASTM C 171 or ASTM C 309.

b. Curing materials, if used, shall provide adequate retention of surface moisture.

c. Burlap, if used, shall not have previously been used for storage or handling of sugar products.

2.1.6 Prestressing Steel

a. Prestressing steel shall be seven-wire uncoated low-relaxation strand

conforming to ASTM A 416, Grade 270.

b. The minimum ultimate strength shall be 270,000 pounds per square inch (psi).

c. Prestressing steel shall be free from grease, oil, wax, paint, soil, dirt, loose rust, kinks, bends, or other defects.

2.1.7 Reinforcing Steel

a. Nonprestressed reinforcing steel shall conform to ASTM A 615/A 615M, Grade 60;

b. Welding of reinforcing steel shall not be performed without prior written approval by Contracting Officer, and then only to be performed in strict accordance with AWS D1.4/D1.4M.

2.1.8 Ties and Spirals

Steel, ASTM A 1064/A 1064M for spirals and ASTM A 615/A 615M for ties.

2.1.9 Anchorages and End Fittings

ACI 318.

2.1.10 Grout

Provide cement grout for prestressed piles using materials conforming to requirements stipulated herein for concrete mixes. Use admixtures, if required, known to have no injurious effects on steel or concrete. Do not use calcium chloride.

2.2 CONCRETE MIX DESIGN

ACI 211.1 or ACI 318, Chapter 4. Concrete shall have the minimum compressive strength as indicated at 28 days and a maximum size aggregate of 3/4 inch. Concrete shall be air entrained with a minimum of 4.5 percent and a maximum of 7.5 percent. Mix shall contain fly ash, ground iron blast furnace slag or silica fume to meet the requirements specified herein to mitigate Alkali-Silica Reactivity (ASR). Ensure a dense concrete free of shrinkage cracks, with a minimum degree of permeability. The maximum water cement ratio shall be 0.40.

2.3 PILE REQUIREMENTS

General Requirements:

a. Prestressed reinforced-concrete piles shall be solid, shall be cast as monolithic units of homogeneous high-strength concrete from butt to tip, and shall be stressed with high-tensile, uncoated, cold-drawn, steel strands.

b. Piles shall have a minimum cross section of 12-inches by 12-inches square in cross section (or as otherwise indicated) and conform to VDOT Typical Details and details on the drawings. In case of conflict, the more stringent requirement shall govern.

c. Convey concrete from the mixer to the forms and deposit in place as rapidly as practicable by methods that will not cause segregation or

loss of ingredients in accordance with ACI 304R.

d. Deposit concrete as nearly as practicable in its final position in forms without the need for rehandling.

e. Free-fall, vertical drop of concrete shall not exceed 3 feet.

f. Aluminum conveying or formwork equipment shall not be used.

g. Perform chuting only where concrete is deposited into a hopper first before it is placed in forms.

h. Clean conveying equipment thoroughly before each run.

i. Remove concrete which has segregated in conveying.

j. Piles shall not be driven until either 28 days have elapsed from the time of casting or Contractor can provide documented evidence that piles have attained intended minimum ultimate compressive strength.

2.4 FABRICATION

a. Fabricate piles to conform to the following tolerances from dimensions stipulated:

(1) Pile length +3/8-inch per 10 feet of length but not greater than +1-1/2 inches.

(2) Pile outside width +3/8-inch or -1/4-inch.

(3) Pile head out of square +1/4-inch per 12-inch width.

(4) Pile ends shall be plane surfaces and perpendicular to longitudinal axis of pile with a maximum deviation of 1/8-inch per foot transversely from a true right angle plane.

(5) Pile accumulated deviation from straight-line horizontal alignment (sweep) not more than 1/8-inch per 10 feet of length.

(6) Pile localized deviation from straight line horizontal alignment (sweep) not more than 1/4-inch within any 10-foot horizontal alignment.

(7) Voids or knock-out inserts in piles, if used, +1/4-inch.

(8) Pile stirrup bars and spirals +3/4-inch.

(9) Pile concrete cover to reinforcing steel +1/4-inch or -1/8-inch.

(10) Pile spacing of spirals +1/2-inch.

(11) Pile reinforcing tendons +1/4-inch.

(12) Pile handling devices +6 inches.

(13) Piles shall present a true, smooth, and even surface free from any surface blemishes.

2.4.1 Performance

a. Concrete used in piles shall have a slump of 4 inches +1 inch, as determined in accordance with ASTM C 143.

b. Concrete used in piles shall have entrained air content from 4 to 6 percent, as determined in accordance with ASTM C 231.

c. Chamfer the ends of all piles and the corners of square piles.

d. Prepare test cylinders at the time concrete is deposited for each production line to determine strength of castings. Cure cylinders in same manner as piles and place at the point where the poorest curing conditions are afforded. This point shall be at the coolest region in the bed for steam-cured piles.

e. Make and cure concrete test specimens in accordance with ASTM C 31.

f. Compressive testing of concrete cylinders shall be in accordance with ASTM C 39. Contractor shall submit compressive strength concrete records.

g. Pile pick-up points shall be the responsibility of Contractor.

h. Workmanship of pile fabrication shall conform to PCI MNL 116.

2.4.2 Formwork

Formwork and dimensional tolerances shall be in accordance with PCI MNL-116, and as specified herein. Provide forms of metal, braced and stiffened against deformation, accurately constructed, watertight, and supported on unyielding casting beds and shall be appropriately treated with lacquer, form oil, or other acceptable material prior to placement of reinforcing steel so as to prevent bonding of forms to concrete. Forms shall permit movement of pile without damage during release of prestressing force. Bottom of form shall be within 0.25-inch of a true plane in a length of 50 feet. Form precast dowel holes with galvanized flexible metal conduit. Inside forms or void tubes not to be grouted may be treated cardboard, plywood, or other material. Release side forms as soon as practicable, but do not remove until concrete has attained a minimum compressive strength of not less than 4,000 psi (or as otherwise indicated).

2.4.3 Pretensioning

Pretensioning shall be performed in accordance with PCI MNL-116, and as specified herein. Use gage calibrated within last 6 months by a laboratory approved by Contracting Officer and continue to calibrate every 5 months from the date of commencing throughout the term of work. Gauges shall be incremented to read to the nearest 100 pounds of load. Provide means for measuring elongation of steel to nearest 1/8 inch. When the difference between results of measurement and gauge reading is more than 5 percent, correct the cause of discrepancy. Give tensioning steel a uniform prestress prior to being brought to design prestress. Induce same initial prestress in each unit when several units of prestressing steel in a pile are stretched simultaneously. Account for thermal changes, a variation between ambient temperature at time of prestressing and concrete temperature at time of placing concrete, resulting in stress changes in accordance with PCI MNL-116. For uniform application of load to strands, the face of the anchorage of final design prestress shall be in a plane parallel to its

position under initial prestress. Final design prestress shall be the minimum indicated stress across the cross-sectional area of pile. Effective prestress shall not be lower than 80 percent of design prestress, taking into account creep and other losses. For uniform application of load to strands, the face of the anchorage of final design prestress shall be in a plane parallel to its position under initial prestress.

2.4.4 Casting

2.4.4.1 Conveying

Convey concrete to formwork in accordance with PCI MNL-116, and as specified herein. Clean conveying equipment thoroughly before each run. During placing, make any free vertical drop of the concrete less than 3 feet. Remove concrete which has segregated in conveying or placing.

2.4.4.2 Placing and Casting

Perform concrete casting within 3 days after pretensioning steel; however, do not deposit concrete in forms until placement of reinforcement and anchorages has been inspected and approved by pile manufacturer's quality control representative. Produce each pile of dense concrete straight with smooth surfaces with reinforcement retained in its proper position during fabrication. Use vibrator with heads smaller than the minimum distance between steel for pretensioning. Make surface of pile ends perpendicular to axis of pile. Chamfer, a minimum of 3/4 inch or as otherwise indicated), ends of piles and corners of square piles.

2.4.4.3 Reinforcements and Embedments

a. Position all reinforcing steel, prestressing steel, pick-up points, and embedded items as indicated within forms and secure to prevent movement during concrete placement.

b. All reinforcing steel and prestressing steel shall have the minimum concrete cover as indicated.

c. Installation of reinforcing steel and inserts shall permit even placement and flow of concrete to all parts of pile.

d. Provide all piles with knock-out inserts, to the diameter and lengths indicated.

e. Firmly position all knock-out inserts to prevent them from being displaced during placement of concrete.

2.4.5 Curing of Piles

Cure piles using moist or accelerated curing. Curing of piles shall be in accordance with the PCI MNL-116 except as follows.

2.4.5.1 Moist Curing

Moist cure using moist burlap coverings, plastic sheeting, or membrane curing compound until minimum strength to detension is achieved.

2.4.5.2 Accelerated Curing

After placement of concrete, moist cure for a period of 4 hours. Follow by

accelerated curing until concrete has reached specified release strength. Enclose casting bed for accelerated curing with a suitable enclosure. During application of steam or heat, increase the air temperature at a rate not to exceed 40 degrees F per hour. Cure at a maximum temperature of 150 degrees F until concrete has reached specified release strength. Reduce temperature at a rate not to exceed 20 degrees F per hour until a temperature of 20 degrees F above ambient air temperature is reached. After accelerated curing, moist cure using either water or membrane curing until a total accelerated and moist curing time of 72 hours is achieved.

2.4.6 Detensioning

Detensioning shall be performed in accordance with PCI MNL-116, and as specified herein. Gradually release tension in strands from anchorage in a manner that will minimize sudden or shock loading. Detension after approval by pile manufacturer's quality control representative. Perform transfer of prestressing force when concrete has reached a minimum compressive strength of 4,000 psi (or as otherwise indicated) and in such a way to preclude longitudinal movement. If concrete has been heat cured, perform detensioning immediately following curing while concrete is still warm and moist and before dimensional changes allowing cracking or undesirable stressing of concrete to occur. Submit concrete tensioning and detensioning records.

2.5 PRODUCT QUALITY CONTROL

Where piling is manufactured in a plant with an established quality control program as attested to by a current certification in the PCI "Certification Program for Quality Control" perform product quality control in accordance with PCI MNL-116. Where piling is manufactured by specialists or in plants not currently enrolled in the PCI "Certification Program for Quality Control," set-up a product quality control system in accordance with PCI MNL-116 and perform concrete and aggregate quality control testing using an independent commercial testing laboratory approved by the Contracting Officer in accordance with the following.

2.5.1 Aggregate Tests

Take samples of fine and coarse aggregate at concrete batch plant and test. Perform mechanical analysis (one test for each aggregate size) in accordance with ASTM C 136. Tabulate results of tests in accordance with ASTM C 33.

2.5.2 Slump and Strength Tests

Sample concrete in accordance with ASTM C 172 at time concrete is deposited for each production line. Perform slump tests in accordance with ASTM C 143. Mold cylinders in accordance with ASTM C 31. Mold at least six cylinders per day or one for every 20 cubic yards of concrete placed, whichever is greater. Cure cylinders in same manner as piles and for accelerated curing, place at coolest point in casting bed. Perform strength tests in accordance with ASTM C 39. Test two cylinders of each set at 7 days or 14 days, or at a time for establishing transfer of prestressing force (release strength) and removal of pile from forms. Test remaining cylinders of each set 28 days after molding.

2.5.3 Changes in Proportions

If, after evaluation of strength test results, compressive strength is less

than specified compressive strength, make adjustments in proportions and water content and changes in temperature, moisture, and curing procedures as necessary to secure specified strength. Submit changes in mix design to Contracting Officer in writing.

2.5.4 Compressive Strength Test Results

Evaluate compressive strength test results at 28 days in accordance with ACI 214R using a coefficient of variation of 10 percent. Evaluate strength of concrete by averaging test results of each set of standard cylinders tested at 28 days. Not more than 10 percent of individual cylinders tested shall have a compressive strength less than specified design strength.

2.5.5 Chloride Ion Concentration

Sampling and determination of water soluble chloride ion content in accordance with ASTM C 1218/C 1218M. Maximum water soluble chloride ion concentrations in hardened concrete at ages from 28 to 42 days contributed from the ingredients including water, aggregates, cementitious materials, and admixtures shall not exceed 0.06 percent by weight of cement.

2.5.6 Chloride Ion Penetration

To ensure the durability of concrete in marine environment, concrete shall be proportioned to have the chloride ion penetration test in accordance with ASTM C 1202, and be below 3000 coulombs for concrete specimens tested at 56 days.

2.6 PILE DRIVING EQUIPMENT

a. Pile Driving Hammer

(1) Drive piles with an approved single, partial double-acting or double-acting steam, air, or diesel hammer, or hydraulic hammer developing a driving energy capable of developing ultimate pile capacity. Drive piles with an approved single, partial double-acting or double-acting steam, air, or diesel hammer developing a driving energy of not less than 20,000 foot-pounds per blow with a minimum ram weight of 6,500 pounds for steam or air hammer, and 1,750 pounds for diesel hammer.

(2) Pile driving hammer shall not develop excessive energy which would result in overstressing or crushing of pile during driving.

(3) Submit details of pile hammer to Contracting Officer for approval at least two weeks prior to driving piles. Should a change in hammer or driving equipment be necessitated by Contractor, submit these revised details to Contracting Officer for approval at least two weeks prior to driving piles with revised equipment.

(4) Boiler or compressor capacities for steam- or air-operated hammers shall be sufficient to operate the hammer continuously at full-rated speed and energy.

(5) For steam- or air-operated pile hammers, provide a pressure gauge to be located on the hammer steam or air line in a position such that it can be clearly read by pile driver operator.

(6) For double-acting diesel hammer, provide a bounce chamber pressure

gauge to be located in a position such that it can be clearly read by pile driver operator.

(7) For single-acting diesel hammer, mark the ram as approved by Contracting Officer to permit determination of stroke.

(8) Equip pile driver with fixed leads, may be altered per Contracting Officer approval, secured to pile driving rig with rigid bracing, and extending to the lowest point which hammer must reach to drive piles.

b. Capblock (Helmet and Hammer Cushion) and Cushion (Pile Cushion)

(1) Protect piles during driving by a capblock-and-cushion assembly of approved design. Show details of driving helmets, capblocks, and pile cushions. Submit 2 weeks prior to test pile installation.

(2) If Contractor elects to use a pile head with projecting strands or mild steel reinforcing, use a special driving head or helmet device to prevent damage to reinforcement and prevent direct impact forces from being transmitted through reinforcement.

2.7 TEST PILES

Test piles shall be installed where indicated. All test piles shall be installed using dynamic pile testing with CAPWAP to verify pile capacity, determine driving criteria, evaluate pile stresses and to check drivability of the pile. Test piles shall be installed in accordance with installation methods submitted for production piling. Provide test piles a minimum of 10 feet longer than shown on the Drawings.

2.8 DYNAMIC PILE TESTING

Dynamic monitoring shall be performed using a Pile Driving Analyzer. All equipment necessary for the dynamic monitoring such as sensors, cables, etc., shall be furnished by Contractor's Geotechnical Engineer. The equipment shall conform to the requirements of ASTM D4945. An experienced engineer shall operate the Pile Driving Analyzer in the field.

Contractor shall provide power capable of operating an electric drill to install sensor attachment holes in the test piles. Contractor shall provide a 12 to 24 volt D.C. power source (e.g., car battery) for operating the Pile Driving Analyzer.

PART 3 EXECUTION

3.1 PILE DRIVING EQUIPMENT

3.1.1 Pile Hammers

Furnish a hammer capable of developing the indicated ultimate pile capacity considering hammer impact velocity; ram weight; stiffness of hammer and pile cushions; cross section, length, and total weight of pile; and character of subsurface material to be encountered. Use the same pile hammer, operating at the same rate and in the same manner, as that used for driving test piles. Obtain required driving energy of hammer, except for diesel hammers, by use of a heavy ram and a short stroke with low impact velocity. At final driving, operate pile hammer in accordance with manufacturer's recommendation for driving either end bearing piles or

friction piles. At final driving, operate diesel powered hammers at rate recommended by manufacturer for hard driving. Maintain pressure at steam or air hammer so that: (1) for double-acting hammer, the number of blows per minute during and at completion of driving of a pile is equal approximately to that at which hammer is rated; (2) for single-acting hammer, there is a full upward stroke of the ram; and (3) for differential type hammer, there is a slight rise of hammer base during each upward stroke.

3.1.2 Driving Helmets and Cushion Blocks

3.1.2.1 Driving Helmets or Caps and Pile Cushions

Use a steel driving helmet or cap including a pile cushion between top of pile and driving helmet or cap to prevent impact damage to pile. Use a driving helmet or cap and pile cushion combination capable of protecting pile head, minimizing energy absorption and dissipation, and transmitting hammer energy uniformly over top of pile. Provide driving helmet or cap that fits sufficiently loose around top of pile so that pile may be free to rotate without binding within driving helmet. During test pile installation, demonstrate to satisfaction of Contracting Officer that equipment to be used on project performs specified function. Use pile cushion of laminated plywood with grain parallel to end of pile. Provide pile cushion with thickness of 6 inches minimum and the thickness shall be increased so as to be suitable for the size and length of pile, character of the sub-surface material to be encountered, hammer characteristics, and the required driving resistance. If Contractor can show through project specific PDA that the thickness or material specified is of detriment to driving (i.e. increasing driving time, increasing pile driving costs, not uniformly shedding pile driving energy) Contractor may pose alternate pile cushion, at cost to Contractor, which will be verified by PDA and must be accepted by Contracting Officer. Replace pile cushion at the start of driving of each pile and when it becomes highly compressed, charred or burned, or has become spongy or deteriorated in any manner. If Contractor elects to use a pile head with projecting strands or mild steel reinforcing, use a special driving head or helmet device to prevent damage to reinforcement and prevent direct impact forces from being transmitted through reinforcement.

3.1.2.2 Hammer Cushion or Capblock

Use a hammer cushion or capblock between driving helmet or cap and hammer ram consisting of a solid hardwood block with grain parallel to the pile axis and enclosed in a close-fitting steel housing or aluminum and micarta (or equal) discs stacked alternately in a steel housing or a suitable polymer designed for this specific purpose as indicated by the hammer manufacturer. Use steel plates at top and bottom of capblock. Replace wood capblock when it becomes highly compressed, charred or burned or becomes spongy or deteriorated in any manner. Replace aluminum, micarta or polymer discs that have become damaged, split or deteriorated in any manner. Do not replace wood capblock during final driving of any pile. Do not use small wood blocks, wood chips, rope or other materials that permit excessive loss of hammer energy.

3.2 PRELIMINARY WORK

3.2.1 Wave Equation Analysis of Pile Drivability

a. Two weeks prior to driving the test piles, Contractor shall submit the

driving equipment data to Contracting Officer. Contracting Officer may use the submitted information to perform independent wave equation analyses to compare to the Contractor's and to summarize wave equation results. The wave equation analyses submitted by the Contractor shall be used to assess the ability of the proposed driving system to install the pile to the required capacity and desired penetration depth within the allowable driving stresses.

b. Approval of the proposed driving system by Contracting Officer shall be based upon the wave equation analyses indicating that the proposed driving system can develop the minimum ultimate pile capacities as indicated at an acceptable driving resistance not greater than 10 to 20 blows per inch within allowable driving stress limits. Contracting Officer may suggest a preliminary driving criterion based on this wave equation analysis and anticipated soil strength changes after driving, subject to further dynamic testing results.

c. Prior to driving any pile, the Contractor shall submit a pile Wave Equation Analysis, performed by a licensed Geotechnical Engineer registered in the jurisdiction of the U.S., for each size pile, capacity and distinct subsurface profile condition. These analyses shall take into account the proposed hammer assembly, pile cap block and cushion characteristics, the pile properties and estimated lengths and the soil properties anticipated to be encountered throughout the installed pile length based on static capacity analysis with consideration of driving gain/loss factors. Only one specific model of pile hammer may be used for each pile type and capacity. Minimum and maximum driving resistance will be determined using the U.S. Department of Transportation, Federal Highway Administration Wave Equation Analysis of Pile Driving (GRLWEAP).

d. The Wave Equation Analysis shall demonstrate that the piles will not be damaged during driving, shall indicate that the driving stresses will be maintained within the limits below and indicate the blow count necessary to achieve the required ultimate static pile capacities.

Allowable Driving Stresses

Concrete
Compression - 0.85f'c minus UPL
Tension - (3 times (the square root of f'c)) plus UPL

f'c is compressive strength of concrete
UPL = Unit Prestress after Losses
(Obtain values from pile manufacturer)

e. Upon completion of the dynamic testing program outlined in this specification section, a refined Wave Equation Analysis shall be performed taking into consideration the evaluated capacities, gain/loss factors and recommended production pile lengths. Production pile driving criteria shall be developed by Contractor's Geotechnical Engineer based on the results of the refined Wave Equation Evaluations.

f. All pile driving equipment furnished by the Contractor shall be subject to the approval of the Contracting Officer. Complete the attached pile and driving equipment data form, including hammer information, in full as part of the submittal of the results of the Wave Equation Analyses.

g. The cost of performing the Wave Equation Analyses shall be paid for by

the Contractor and included in the base bid.

3.2.2 Order List

The Contractor shall submit to the Contracting Officer for approval, an itemized list for piles prior to placing the order with the supplier. The list shall indicate the pile lengths required at each location as shown on the plans and the corresponding ordered length of each pile. Load testing and refined wave equation analysis shall be completed prior to submission of an order list.

3.2.3 Pile Length Markings

The Contractor shall mark each pile prior to driving with horizontal lines at one foot intervals, and the number of feet from pile tip at 5 foot intervals.

3.3 PILE DRIVING

3.3.1 Piles Capacity

All piles shall be driven to minimum ultimate capacity as indicated.

3.3.2 Driving Piles

a. Notify Contracting Officer 21 days prior to driving of test piles with PDA testing. Foundation excavation shall be stopped at 1 foot above foundation grade before piles are driven. When pile driving is completed, excavation shall be completed to lines and grade shown.

b. All piles shall be predrilled to the depths indicated.

c. Piles may be driven when the specified 28-day concrete strength has been achieved but not less than 7 days after casting.

d. Drive piles to indicated tip elevation to reach a driving resistance established by the wave equation analyses (GRLWEAP) in accordance with the schedule which the Contractor's Geotechnical Engineer shall prepare from the test-pile driving data.

e. During initial driving and until pile tip has penetrated beyond layers of very soft soil, use a reduced driving energy of the hammer as required to prevent pile damage. Refusal criteria shall be established by the Contracting Officer.

f. If a pile fails to reach indicated tip elevation, or if a pile reaches "calculated" tip elevation without reaching required driving resistance, notify Contracting Officer and perform corrective measures as directed.

g. Provide hearing protection.

h. Piles or pile sections shall not be handled or moved in any manner that would result in cracking or permanent damage to the concrete or to the grout surrounding the prestressing cables. Piles may be driven without pile guides or leads providing a hammer guide frame is used to keep the pile and hammer in alignment.

i. Pile driving shall be suspended if impact shock results in problems to

any adjacent structures or equipment, until corrective measures can be taken by Contractor.

j. Drive piles in a sequential operation which will minimize heaving of adjacent piles.

k. No method requiring force to correct position or line of any pile during driving will be permitted.

3.3.3 Protection of Piles

Take care to avoid damage to piles during handling, placing pile in leads, and during pile driving operations. Support piles laterally during driving, but allow rotation in leads. Where pile or projecting reinforcement orientation is essential, take precautionary measures to maintain the orientation during driving. Square top of pile to longitudinal axis of pile. Maintain axial alignment of pile hammer with that of the pile. If the Contractor elects to use a pile head with projecting strands or mild steel reinforcement, prevent direct impact forces from being transmitted through the reinforcement, by using a special driving head.

3.3.4 Tolerances in Driving

Drive piles with a variation of not more than 2 percent from vertical for plumb piles or more than 4 percent from required angle for batter piles. Maintain and check axial alignment of pile and leads at all times. If subsurface conditions cause pile drifting beyond allowable axial alignment tolerance, notify Contracting Officer and perform corrective measures as directed. Drive pile butts to within 3 inches of location indicated. Manipulation of piles within specified tolerances will not be permitted. Acceptable tolerance of top of pile from intended cutoff elevation shall not be more than 1/2 inch. Contractor may elect to trim piles to cutoff elevation after pile cap is excavated. In addition to specified tolerances, maintain a location to provide a clear distance of at least 6 inches from butt to edge of pile cap. If clear distance can not be maintained, then notify Contracting Officer. Check each pile for heave. Redrive heaved piles to required point elevation.

3.3.5 Rejected Piles

Piles damaged or impaired for use during handling or driving, mislocated, or driven out of alignment beyond the maximum tolerance shall be withdrawn and replaced by new piles or shall be cut-off and abandoned and new piles driven as directed. Excess cut-off from piles and unacceptable piles shall be removed from the work site. All work in connection with withdrawing and removing rejected piles from the site shall be done at no additional cost to the Government. Perform one of the following, as directed by Contracting Officer, for those piles which have been rejected: (1) Leave piles in place, cut off as directed, and drive one or more new piles in locations designated by Contracting Officer to replace rejected pile and maintain symmetry of pile group or cluster (2) Withdraw pile and drive new pile. Any holes which result from pile withdrawal shall be packed with sand, gravel, or other approved nonplastic (noncohesive) material before redriving replacement pile.

3.3.6 Jetting of Piles

Jetting will not be permitted.

3.3.7 Predrilling of Piles

Predrill to remove soil or other material representing the bulk of the volume of the pile to be driven shall be performed. The diameter of the hole should not exceed 70% of the pile width. Predrill only to the depths indicated.

3.3.8 Splices

Full-length piles shall be used where applicable. Splicing may be permitted. Splices will not be allowed within the upper 35 feet of pile unless approved by Government based on review of acceptable submittal. Splices shall be capable of developing the full strength of the member in compression, tension, shear, and bending. Detail drawings of splices and design data calculations demonstrating the strength of the splice shall be submitted for approval.

3.3.9 Build-Ups

Where required, pile section may be extended to cut-off elevation by means of a cast-in-place reinforced concrete build-up. Make build-up in accordance with PCI STD-112. Construct build-ups made after completion of driving in accordance with detail, "Build-Up Without Driving." Make build-ups to be driven in accordance with detail "Build-Up With Driving." Have details of means for protecting joints by a suitable mortar or epoxy approved by Contracting Officer. If in the judgment of the Contracting Officer, the build-ups are undesirable, withdraw piles of insufficient length and replace with longer piles. Payment for such withdrawal and replacement will be made as an adjustment to the contract price.

3.3.10 Pile Cut-Off

Cut-off piles by removing concrete and exposing steel strands for embedment into pile cap as indicated. Concrete debris shall be removed from the site upon completion of the work. Cutoff shall be perpendicular to vertical axis of pile within 1/2-inch of cutoff elevation indicated. If excavation around piles is required to achieve pile cutoff, stockpile excavated material for recompaction or remove and dispose of as directed by Contracting Officer.

3.3.11 Heaving

a. Check heaving on a selected reference pile within each pile group or cluster.

b. Check reference pile by comparison of elevations before and after driving of all adjacent piles within a group or cluster.

c. Heaving shall be considered as occurring to all piles within a group or cluster when reference pile head elevation changes in excess of 0.025-foot.

d. Redrive piles within a group or cluster when reference pile heaves in excess of 0.025-foot.

3.4 FIELD QUALITY CONTROL

3.4.1 Test Pile Test Program

a. Test piles shall be driven to identify and confirm permanent pile driving characteristics at various locations and develop information to establish length variations resulting from changes of bearing stratum elevation or characteristics not disclosed in soils investigation data; and to evaluate performance of Contractor's proposed installation equipment and methods, determine required installation procedures, and establish tentative installation criteria. The specific objectives of the program are:

   (1) Evaluate stresses in the pile during installation considering cushion material and thickness and hammer fuel settings.

   (2) Evaluate driving procedures on rate of installation and ability to achieve the required ultimate capacity.

   (3) Evaluate hammer performance relative to the ability of the hammer to deliver the specified minimum impact stress and transferred energy to develop twice the design capacity.

   (4) Evaluate the effectiveness of Contractor's pile driving equipment and procedures to adequately control pile position and alignment during pile installation without damaging the piles.

   (5) Develop data to aid in determining production pile tip elevations. Included in this data is the minimum penetration depth to achieve required pile capacity.

   (6) Establish tentative installation procedures and criteria including requirements for hammer fuel settings, and final driving criteria.

b. Test piles shall be driven to an ultimate pile capacity and corresponding driving resistance as indicated by Contracting Officer of twice the design capacity based upon the preliminary driving resistance indicated by wave equation results and the dynamic testing. Adjustments to the preliminary driving criteria may be made by Contracting Officer based upon the dynamic testing results of both initial driving and restrike tests.

c. Test piles shall be installed as indicated. All test piles shall be redriven with dynamic testing after a minimum waiting period of 5 to 7 days. The restrike shall be performed with a warmed up hammer and shall consist of striking the piles for 50 blows or until the pile penetrates an additional three inches, whichever occurs first. In the event the pile movement is less than 1/2 inch during the restrike, the restrike may be terminated after 20 blows. To facilitate dynamic testing of piles, all test piles shall be 10 feet longer than that anticipated due to the soil conditions.

3.4.2 Dynamic Pile Analysis (PDA)

a. The purpose of dynamic testing is to provide supplemental information for evaluating pile hammer performance, driving stresses, and bearing capacities. Dynamic testing shall be conducted during the entire time test piles are initially driven or redriven and during test pile restrike testing. Use piles of type as specified elsewhere in this

section. Contractor shall use the same installation equipment (hammer, cushion, capblock, follower) and methods during the driving of the test piles as will be used for production pile driving. Each additional hammer and equipment setup including one of identical make and model shall require performance evaluation (including Pile Driving Analyzer) and Contracting Officer's subsequent approval.

b. Equipment to obtain dynamic measurements, record, reduce and display its data shall be furnished and meet the requirement of ASTM D4945. Dynamic testing requires attaching two strain transducers and two accelerometers to the pile usually 1.5 to 3 pile diameters below the pile head during initial driving or at a convenient location during restrike testing. Contractor's Geotechnical Engineer shall take measures to ensure that the location of strain gage placement does not impact the accuracy of the ultimate compression capacity of the piling per Pile Driving Analyzer and CAPWAP analyses. The equipment shall have been calibrated within 12 months thereafter throughout the contract duration. Drive test at the locations indicated. The Contractor shall employ an independent inspection firm, referred to as the "Contractor's Geotechnical Engineer", experienced in the pile driving process, monitoring of test pile installation, and in the use of the Pile Driving Analyzer and its related equipment. Dynamic pile analysis shall be performed as follows:

Construction Access:

(1) Prior to lifting the pile to be dynamically tested, Contractor shall provide a minimum of 3 feet of clear access to 180 degree opposite faces of the pile for pile preparation. Contractor's Geotechnical Engineer or Contractor's personnel shall then drill and prepare holes in the pile for attachment of sensors.

(2) Contractor's personnel shall attach the sensors to the pile prior to initial driving. Driving shall then continue using routine pile installation procedures. When the sensors approach the ground surface, water surface, or a pile template, driving shall be halted to remove the sensors from the pile to prevent damage to the sensors. If additional driving is required, the pile shall be spliced and the sensors shall be reattached to the next pile segment prior to continuing driving.

(3) Installation is typical of normal pile installation except Contracting Officer may frequently stop driving to request changes in the hammer fuel setting, or to check the PDA gauges and equipment. If requested, Contractor shall provide Contractor's Geotechnical Engineer access to the head of the pile to check the gauge and cable attachments, change gauges, or perform similar work. Provide a qualified member of the pile driving crew to assist Contractor's Geotechnical Engineer with such work as directed.

c. The initial dynamic pile analysis shall be performed to check the hammer, pile and soil performance, and to determine the suitability of the proposed hammer for the size, length and type of pile being installed for the soil types encountered as the piles are driven. This initial monitoring shall determine efficiency of the hammer relative to specified efficiency, effectiveness of cushion, level of compressive and tensile stress in pile and extent/location of any pile damage caused by the initial driving.

d. With each blow of the pile the information listed below shall be electronically recorded and analyzed by the Pile Driving Analyzer:

(1) Blow number

(2) Blow rate per minute and/or stroke.

(3) Input and reflected values of force and velocity.

(4) Value of upward and downward traveling force wave with time.

(5) Maximum and final transferred energy to pile, hammer system efficiency.

(6) Maximum compressive stress, velocity, acceleration and displacement.

(7) Maximum tensile stress in pile.

(8) Pile structural integrity, damage detection, extent and location.

(9) Bearing capacity of pile by Case method.

If the pile, hammer and soil performance evaluation recommends changes to the hammer stroke, pile cushioning, augering or any other aspect for the pile driving operation these changes shall be incorporated into production pile driving in an effort to control excessive stresses and pile damage. Test piles damaged or broken during installation shall be replaced, incorporating driving modifications as determined by the Contractor's Geotechnical Engineer and reviewed and approved by the Contracting Officer. This procedure shall be repeated until allowable tensile and compressive stresses are achieved in the pile and pile damage is minimized. Initial driving records shall be subjected to rigorous computer analysis by the Case Pile Wave Analysis Program (CAPWAP) for determination of resistance distribution, soil resistance and properties, and estimation of anticipated gain/loss factors. Combinations of hammer cushions and thicknesses, and hammer fuel settings shall be investigated during the testing. Contractor shall cooperate with Contracting Officer by installing the test piles using combinations of cushion material and thicknesses, and hammer fuel settings selected by Contracting Officer. Change cushions, or change hammer fuel settings when requested by Contractor's Geotechnical Engineer.

e. In addition to those items listed above, restrike driving records are to be subjected to rigorous computer analysis by the Case Pile Wave Analysis Program (CAPWAP) for determination of resistance distribution, soil resistance and properties, and plot of applied load vs. average pile displacement based on the calculated soil properties.

Performance Report:

(1) Upon satisfactory completion of each dynamic load test a minimum of three copies of a Pile Performance Report shall be submitted by the Contractor's Geotechnical Engineer for review by the Contractor and Contracting Officer. The submittal shall be prepared and sealed by a Professional Engineer registered in the

jurisdiction of the U.S. and shall be made for review immediately upon completion of each dynamic pile testing operation, and prior to installation of further production piling. Contractor's Geotechnical Engineer shall provide Contracting Officer with electronic copies of the X01 data files generated during the dynamic testing immediately upon completion of each dynamic pile testing operation.

(2) The report for the Dynamic Pile Analysis shall contain the following information:

(a) Bearing capacity of pile from Case Pile Wave Analysis Program (CAPWAP). Information resulting from analysis of a selected end of initial drive and restrike blow.

(b) Maximum and final transferred energy, hammer system efficiency during pile installation.

(c) Maximum compressive stress, velocity, acceleration and displacement.

(d) Maximum tensile stress in pile.

(e) Pile structural integrity, damage detection, extent and location.

(f) Blows per minute and blow number.

(g) Input and reflection values of force and velocity, upward and downward traveling force wave with time.

(h) Pile skin friction and toe resistance distribution.

(i) Maximum energy transferred to pile.

(3) The final driving criteria will be proposed by the Contractor's Geotechnical Engineer based upon the results of satisfactory dynamic pile load tests conducted on piles driven as specified herein and shall include the effects of load transfer to the soil above the foundation stratum. The Contracting officer shall review the provided report to check reliability.

All services of the Contractor's Geotechnical Engineer shall be paid for by the Contractor. The Contractor's Geotechnical Engineer shall be available throughout the pile driving operation to consult with the Contracting Officer when required by the Contracting Officer. The cost of changes in the Contractor's procedure, as required by evaluation of the results of the Pile Driving Analysis, shall be at the Contractor's expense.

3.4.3 Pile Records

Keep a complete and accurate record of each pile driven. Indicate the pile location, deviations from pile location, cross section shape and dimensions, original length, ground elevation, tip elevation, cut-off elevations, number of blows required for each foot of penetration and number of blows for the last 6 inches penetration or fraction thereof as required for the "calculated" driving resistance. Include in the record the beginning and ending times of each operation during driving of pile,

type and size of hammer used, rate of operation, stroke or equivalent stroke for diesel hammer, type of driving helmet, and type and dimension of hammer cushion (capblock) and pile cushion used. Record retap data and unusual occurrences during pile driving such as redriving, heaving, weaving, obstructions, and any driving interruptions. The Contractor shall submit a completed Pile Driving Log for all test and production piles, containing all pertinent pile record information.

-- End of Section --

SECTION 31 62 99

VIBRATION MONITORING

PART 1 GENERAL

1.1 SYSTEM DESCRIPTIONS

1.1.1 Performance Requirements

Use a sufficient number of seismographs to monitor Building 336, pipe trench south of Tank 501, pipe trench at Ocean Road, pipe trench at foot of Pier C, and pipe trench at Pier D south and as directed by Contracting Officer. Provide instruments to measure noise during pile driving.

1.2 RELATED SECTIONS

a. DIVISION 31 - Section 31 62 13.20 - PRECAST/PRESTRESSED CONCRETE PILES

1.3 REFERENCES

Standards listed by reference, including revisions by issuing authority, form a part of this Specification Section to extent indicated. Standards listed are identified by issuing authority, authority abbreviation, designation number, title or other designation established by issuing authority. Standards subsequently referenced herein are referred to by issuing authority abbreviation and standard designation.

U.S. DEPARTMENT OF INTERIOR, BUREAU OF MINES

Bureau of Mines	Report of Investigation 8507 by D.E. Siskind, et. al. Appendix, Figure B 1.

U.S. ARMY CORPS OF ENGINEERS (USACE)

EM 1110-2-3800	Engineering and Design - Systematic Drilling and Blasting for Surface Excavations

1.4 SUBMITTALS

Government approval is required for submittals with a "G" designation; submittals not having a "G" designation are for information only. Submit the following in accordance with Section 01 33 00.

SD-01 Preconstruction Submittals

Monitoring Plan; G

Number, Locations and Type of Seismographs Anticipated for Use; G

Condition Survey Report; G

Pre-driving/installation damage survey document for specified structures

SD-06 Test Reports

Site Vibration Records; G

Seismic vibration monitoring readings from electronic seismographs stationed at ground surface or at critical building or structure locations, to include seismograph location, distance away from work, peak particle velocities, frequencies, and time of reading.

Crack or structure displacement measurements at locations predetermined from the pre-driving survey.

SD-11 Closeout Submittals

Damage inspection survey document; G

1.5 QUALITY ASSURANCE

1.5.1 Qualifications

Provide a list of qualifications of the Contractor's Vibration Consultant at time of bid which clearly exhibits technical adequacy. The qualifications shall enumerate a minimum of five similar projects in the recent past (maximum 3 years).

1.5.2 Pre-Installation Conference

Conduct pre-installation meeting to verify project requirements, site conditions which may affect vibration recording activities, installation location and schedule of on-site representation.

1.5.3 Pre-Installation Damage Survey

Perform a damage inspection survey of facilities within 100 feet of pile driving operations prior to the start of pile driving. Document all existing damage to adjacent facilities including written descriptions, diagrams, measurements, photographs and video, as appropriate. Establish additional vibration monitoring points as necessary based on survey results.

Crack displacement monitoring gages shall be installed as appropriate across any significant existing cracks to help verify any additional structure distress if it should develop during pile installation, demolition and other vibration generating activities. The appropriate location, number, and type of gages shall be established by the Contractor with approval from the Contracting Officer. Horizontal and vertical control points shall be established on select locations of the exterior of buildings and existing structures.

The survey shall include the establishment of horizontal and vertical control points to the nearest 0.01 feet, at a spacing not greater than 50 feet on center, along the top of crane and railroad rails and other sensitive structures or those of concern (as identified herein) located within 100 feet of pile driving operations. The survey shall be performed by a Professional Land Surveyor.

1.6 CONDITION SURVEY REPORT

1.6.1 Report

Upon completion of the Pre-Installation Damage Survey and within 7 days prior to commencing pile driving operations, submit a Condition Survey Report to include the following:

a. Site survey including benchmarks and horizontal and vertical control points.

b. Clear identification and documentation of areas of pre-installation damage.

c. Precise location of monitoring points and gages along with baseline data for each from which to measure displacements during and after pile driving operations.

d. Indication of areas, structures, and utilities for which the Contractor has some reason to suspect may need correction or reinforcement prior to pile driving operations in order to maintain safety and continued Government operations.

The report shall include video and photographs as necessary to document conditions.

1.6.2 Report Review

The report must be reviewed and approved by the Contracting Officer before pile driving may begin.

1.7 MONITORING PLAN

1.7.1 Submittal

Submit monitoring plan a minimum of 14 calendar days before the start of work. Monitoring plan shall include the proposed number, location and types of settlement and vibration monitoring points, frequency and duration of readings, acceptable ranges for vibration and settlement readings for all structure locations to be monitored, and procedures for alerting pile driving personnel to excessive vibration levels warranting modifications to pile driving operations.

Within seven (7) calendar days prior to commencement of pile driving operations, submit the number, locations and type of seismographs anticipated for use on the project.

1.7.2 Plan Review

The monitoring plan must be reviewed by the Contracting Officer before pile driving may begin.

1.8 MAINTENANCE

1.8.1 Maintenance Service

Vibration and noise monitoring equipment shall be maintained in good working condition.

PART 2 PRODUCTS

2.1 EQUIPMENT

Use a minimum of two seismographs at each specified location and as otherwise directed by Contracting Officer capable of detecting and recording amplitude (peak particle velocities in three mutually perpendicular directions, otherwise known as the x, y, and z axes) and frequency (hertz). Displacement shall be developed, if needed for frequencies as required, from empirical computer relationships.

A minimum of one dosimeter or noise meter(s) as applicable to ensure threshold noise levels are not surpassed during pile driving.

2.2 TESTS, INSPECTIONS, AND VERIFICATIONS

All equipment utilized shall have been calibrated within one year of the date initially used for this work or results verified based upon manufacturer's guidelines.

PART 3 EXECUTION

3.1 PREPARATION

Contractor's Vibration Consultant shall survey and carefully detail all surrounding structures susceptible to vibration disturbance or deemed necessary by Contracting Officer.

Measure background vibration response and air response noise prior to commencing driving.

Perform background monitoring during construction at times corresponding to those times of proposed driving operations.

Determine locations to set up seismographs, or where to position during various stages of pile driving activities. Establish a relationship between vibration amplitude and distance from the pile driving hammer for various distances across the site.

Perform background monitoring prior to commencement of construction operations.

3.2 MONITORING ACTIVITIES

Monitor driving operations at necessary locations throughout the test pile program and the first five (5) days of production pile installation, referencing location of seismographs and distance away from work.

Perform monitoring activities and survey control points at a frequency no less than one (1) full day weekly for the first four weeks of pile driving activities, bi-weekly thereafter during pile driving activities, or at intervals as required by the Contracting Officer.

Provide a permanent record from each seismograph, referencing location of seismographs and distance away from driving operation. Submit site vibration records within 24 hours of testing.

Work shall cease and the Contracting Officer shall be notified immediately if any movement is detected by surveys or monitoring gages and if noise or

vibration exceeds maximum allowables.

The Contractor shall be responsible for protecting all existing structures, foundations, utilities and other improvements during the course of driving operations and shall modify their equipment and procedures to stay within vibration and movement tolerances noted herein.

3.3 FIELD QUALITY CONTROL

3.3.1 Maximum Vibration

Peak particle velocities and/or displacements at adjacent structures, equipment, exposed or buried, pipelines and conduits shall not exceed the level of criteria as determined by United States Department of Interior, Bureau of Mines in Appendix Figure B 1 from Report of Investigations 8507 by D.E. Siskind, et. al. and EM 1110-2-3800 "Systematic Drilling and Blasting for Surface Excavations".

3.3.2 Maximum Noise

Noise restrictions must follow pertinent OSHA guidelines or Contractor shall ensure proper personal protection equipment (PPE) as directed by Contracting Officer. The Contractor shall force the use of adequate hearing protection of his personnel and provide hearing protection for Government personnel working in the area.

3.4 PROTECTION

Monitoring equipment shall be protected as necessary to monitor driving operations.

All necessary OSHA guidelines must be adhered during driving activities or as indicated by the Contracting Officer.

3.5 SCHEDULES

3.5.1 Post Driving Survey

Perform damage inspection survey of the same facilities and structures evaluated during the pre-vibration survey to detect any effects resulting from driving operations.

Perform damage inspection survey first upon those facilities and structures in which the individuals occupying the structures provide complaints or register a concern to potential damage resulting from driving.

Conduct damage inspection survey commencing at most 45 calendar days after completion of driving. Submit damage inspection survey document within seven (7) calendar days after completion of damage inspection survey. Contractor shall be responsible for any damage to adjacent structures, facilities, equipment or other improvements damaged by the Contractor's operations.

-- End of Section --

SECTION 32 05 33

LANDSCAPE ESTABLISHMENT
02/10

PART 1 GENERAL

1.1 REFERENCES

The publications listed below form a part of this specification to the extent referenced. The publications are referred to within the text by the basic designation only.

ASTM INTERNATIONAL (ASTM)

ASTM D5851	(1995; R 2011) Planning and Implementing a Water Monitoring Program

1.2 DEFINITIONS

1.2.1 Pesticide

Any substance or mixture of substances, including biological control agents, that may prevent, destroy, repel, or mitigate pests and are specifically labeled for use by the U.S. Environmental Protection Agency (EPA). Also, any substance used as a plant regulator, defoliant, disinfectant, or biocide. Examples of pesticides include fumigants, herbicides, insecticides, fungicides, nematicides, molluscicides and rodenticides.

1.2.2 Stand of Turf

95 percent ground cover of the established species.

1.3 RELATED REQUIREMENTS

Section 32 92 19 SEEDING applies to this section for installation of seed requirements, with additions and modifications herein.

1.4 SUBMITTALS

Government approval is required for submittals with a "G" designation; submittals not having a "G" designation are for Contractor Quality Control approval. The following shall be submitted in accordance with Section 01 33 00 SUBMITTAL PROCEDURES:

SD-01 Preconstruction Submittals

Integrated Pest Management Plan; G

SD-03 Product Data

Fertilizer; G

SD-07 Certificates

Maintenance inspection report

SD-10 Operation and Maintenance Data

Maintenance

1.5 DELIVERY, STORAGE AND HANDLING

1.5.1 Delivery

Deliver fertilizer to the site in original containers bearing manufacturer's chemical analysis, name, trade name, or trademark, and indication of conformance to state and federal laws. Instead of containers, fertilizer may be furnished in bulk with a certificate indicating the above information.

1.5.2 Storage

1.5.2.1 Fertilizer and Mulch Storage

Material shall be stored in designated areas. Fertilizer shall be stored in cool, dry locations away from contaminants.

1.5.2.2 Antidessicants Storage

Do not store with fertilizers or other landscape maintenance materials.

1.5.3 Handling

Do not drop or dump materials from vehicles.

1.6 SUSTAINABLE DESIGN REQUIREMENTS

1.6.1 Local/Regional Materials

Use materials or products extracted, harvested, or recovered, as well as manufactured, within a 500 mile radius from the project site, if available from a minimum of three sources.

1.7 MAINTENANCE

Submit Operation and Maintenance (O&M) Manuals for planting materials. Include instructions indicating procedures during one typical year including variations of maintenance for climatic conditions throughout the year. Provide instructions and procedures for watering; promotion of growth, including fertilizing, pruning, and mowing; and integrated pest management. O&M Manuals shall include pictures of planting materials cross referenced to botanical and common names, with a description of the normal appearance in each season.

Develop a water monitoring program for surface and ground water on the project site in accordance with ASTM D5851 and consistent with the water management program utilized during construction operations.

PART 2 PRODUCTS

2.1 POST-PLANT FERTILIZER

Fertilizer for groundcover, wildflowers, and grasses is not permitted. Fertilizer for trees, plants, and shrubs shall be as recommended by plant supplier, except synthetic chemical fertilizers are not permitted.

Fertilizers containing petrochemical additives or that have been treated with pesticides or herbicides are not permitted.

2.1.1 Granular Fertilizer

Organic, granular controlled release fertilizer containing the following minimum percentages, by weight, of plant food nutrients:

20 percent available nitrogen
5 percent available phosphorus
10 percent available potassium

2.2 WATER

Source of water shall be approved by the Contracting Officer, and be of suitable quality for irrigation. Use collected storm water or graywater when available.

2.3 MULCHES TOPDRESSING

Free from noxious weeds, mold, pesticides, or other deleterious materials.

2.3.1 Organic Mulch Materials

Wood cellulose fiber, wood chips, ground or shredded bark, shredded hardwood, bark peelings, pine straw mulch, and recycled from site when available. Biobased content shall be a minimum of 100 percent. Wood cellulose fiber shall be processed to contain no growth or germination-inhibiting factors, dyed with non-toxic, biodegradable dye to an appropriate color to facilitate visual metering of materials application. Paper-based hydraulic mulch shall contain a minimum of 100 percent post-consumer recycled content. Wood-based hydraulic mulch shall contain a minimum of 100 percent recycled material.

2.3.2 Recycled Organic Mulch

Recycled mulch may include compost, tree trimmings, or pine needles with a gradation that passes through a 2-1/2 by 2-1/2 inch screen. It shall be cleaned of all sticks a minimum 1 inch in diameter and plastic materials a minimum 3 inch length. The material shall be treated to retard the growth of mold and fungi.

2.4 PESTICIDES

Pesticides and herbicides are not permitted. Submit an Integrated Pest Management Plan, including weed and pest management strategies and proposed alternatives to herbicides and pesticides. Use biological pest controls as approved in the Plan.

PART 3 EXECUTION

3.1 EXTENT OF WORK

Provide landscape construction maintenance to include mowing, edging, overseeding, aeration, fertilizing, watering, and weeding, for all newly installed landscape areas and existing plant material, unless indicated otherwise, and at all areas inside or outside the limits of the construction that are disturbed by the Contractor's operations.

3.1.1 Policing

The Contractor shall police all landscaped areas. Policing includes removal of leaves, branches and limbs regardless of length or diameter, dead vegetation, paper, trash, cigarette butts, garbage, rocks or other debris. Policing shall extend to both sides of fencing or walls. Collected debris shall be promptly removed and disposed of at an approved disposal site.

3.1.2 Drainage System Maintenance

The Contractor shall remove all obstructions from surface and subsurface drain lines to allow water to flow unrestricted in swales, gutters, catch basins, storm drain curb inlets, and yard drains. Remove grates and clear debris in catch basins. Open drainage channels are to be maintained free of all debris and vegetation at all times. Edges of these channels shall be clear of any encroachment by vegetation.

3.2 GROUNDCOVER ESTABLISHMENT PERIOD

Groundcover establishment period will commence on the date that inspection by the Contracting Officer shows that the new and renovated turf furnished under this contract has been satisfactorily installed to a 95 percent stand of coverage. The establishment period shall continue for a period of 365 days.

3.2.1 Frequency of Maintenance

Begin maintenance immediately after turf has been installed or fully renovated. Inspect areas once a week during the installation and establishment period and perform needed maintenance promptly.

3.2.2 Promotion of Growth

Groundcover shall be maintained in a manner that promotes proper health, growth, natural color. Turf shall have a neat uniform manicured appearance, free of bare areas, ruts, holes, weeds, pests, dead vegetation, debris, and unwanted vegetation that present an unsightly appearance. Mow, remove excess clippings, eradicate weeds, water, fertilize, overseed, aerate, topdress and perform other operations necessary to promote growth, as approved by Contracting Officer and consistent with approved Integrated Pest Management Plan. Remove noxious weeds common to the area from planting areas by mechanical means.

3.2.3 Mowing

3.2.3.1 Turf

Turf shall be mowed at a uniform finished height. Mow turfed areas to a minimum average height of 4 inches when average height of grass becomes 5 inches for spring/summer maintenance and to a minimum average height of 3 inches when the average height of grass reaches 4 inches for fall maintenance. The height of turf is measured from the soil. Mowing of turf shall be performed in a manner that prevents scalping, rutting, bruising, uneven and rough cutting. Prior to mowing, all rubbish, debris, trash, leaves, rocks, paper, and limbs or branches on a turf area shall be picked up and disposed. Adjacent paved areas shall be swept/vacuumed clean.

3.2.3.2 Native Grasses

Mow above height of native grass seedlings (approximately 3.5 to 4 inches). Mow during spring or early summer. Do not mow after early summer during the second growing season.

3.2.4 Turf Edging and Trimming

Perimeter of planter bed edges, sidewalks, driveways, curbs, and other paved surfaces shall be edged. Uniformly edge these areas to prevent encroachment of vegetation onto paved surfaces and to provide a clear cut division line between planter beds, turf, and ground cover. Edging is to be accomplished in a manner that prevents scalping, rutting, bruising, uneven and rough cutting. Edging shall be performed on the same day that turf is mowed. Use of string line trimmers is permitted in "soft" areas such as an edge between turfgrass and a planter bed. Care shall be exercised to avoid damage to any plant materials, structures, and other landscape features.

Trimming around trees, fences, poles, walls, and other similar objects is to be accomplished to match the height and appearance of surrounding mowed turf growth. Trimming shall be performed on the same day the turf's mowed. Care shall be exercised to avoid "Girdling" trees located in turf areas. The use of protective tree collars on trees in turf areas may be utilized as a temporary means to avoid injury to tree trunks. At the end of the plant establishment period Contractor will be responsible for removing all protective tree collars.

3.2.5 Post-Fertilizer Application

Do not fertilize wildflowers, groundcover, and grasses. Apply turf fertilizer in a manner that promotes health, growth, vigor, color and appearance of cultivated turf areas. The method of application, fertilizer type and frequencies shall be determined by the laboratory soil analysis results the requirements of the particular turf species. Organic fertilizer shall be used. In the event that organic fertilizer is not producing the desired effect, the Contractor shall contract the Contracting Officer for approval prior to the use of a synthetic type of fertilizer. Fertilizer shall be applied by approved methods in accordance with the manufacturer's recommendations.

3.2.6 Turf Watering

The Contractor shall perform irrigation in a manner that promotes the health, growth, color and appearance of cultivated vegetation and that complies with all Federal, State, and local water agencies and authorities directives. The Contractor shall be responsible to prevent over watering, water run-off, erosion, and ponding due to excessive quantities or rate of application. The Contractor shall abide by state, local or other water conservation regulations or restrictions in force during the establishment period.

3.2.7 Turf Aeration

Upon completion of weed eradication operations and Contracting Officer's approval to proceed, aerate turf areas by approved device. Core, by pulling soil plugs, to a minimum depth of 6 inches. Leave all soil plugs that are produced in the turf area.

3.2.8 Turf Clearance Area

Trees located in turf areas shall be maintained with a growth free clearance of 24 inches from the tree trunk base. The use of mechanical weed whips to accomplish the turf growth free bed area is prohibited.

3.2.9 Replanting

Replant in accordance with Section 32 92 19 SEEDING and within specified planting dates areas which do not have a satisfactory stand of turf. Replant areas which do not have a satisfactory stand of other groundcover and grasses.

3.2.10 Final Inspection and Acceptance

Final inspection will be make upon written request from the Contractor at least 10 days prior to the last day of the turf establishment period. Final turf acceptance will be based upon a satisfactory stand of turf. Final acceptance of grass areas will be based upon a stand of 95 percent groundcover of established species.

3.2.11 Unsatisfactory Work

When work is found to not meet design intent and specifications, maintenance period will be extended at no additional cost to the Government until work has been completed, inspected and accepted by Contracting Officer.

3.3 FIELD QUALITY CONTROL

3.3.1 Maintenance Inspection Report

Provide maintenance inspection report to assure that landscape maintenance is being performed in accordance with the specifications and in the best interest of plant growth and survivability. Site observations shall be documented at the start of the establishment period, then quarterly following the start, and at the end of establishment period. Results of site observation visits shall be submitted to the Contracting Officer within 7 calendar days of each site observation visit.

-- End of Section --

SECTION 32 11 23

AGGREGATE BASE COURSE
08/08

PART 1 GENERAL

1.1 REFERENCES

The publications listed below form a part of this specification to the extent referenced. The publications are referred to in the text by basic designation only.

AMERICAN ASSOCIATION OF STATE HIGHWAY AND TRANSPORTATION OFFICIALS (AASHTO)

AASHTO T 180	(2010) Standard Method of Test for Moisture-Density Relations of Soils Using a 4.54-kg (10-lb) Rammer and a 457-mm (18-in.) Drop
AASHTO T 224	(2010) Standard Method of Test for Correction for Coarse Particles in the Soil Compaction Test

ASTM INTERNATIONAL (ASTM)

ASTM D1556	(2007) Density and Unit Weight of Soil in Place by the Sand-Cone Method
ASTM D1557	(2012) Standard Test Methods for Laboratory Compaction Characteristics of Soil Using Modified Effort (56,000 ft-lbf/ft3) (2700 kN-m/m3)
ASTM D2167	(2008) Density and Unit Weight of Soil in Place by the Rubber Balloon Method
ASTM D2487	(2011) Soils for Engineering Purposes (Unified Soil Classification System)
ASTM D6938	(2010) Standard Test Method for In-Place Density and Water Content of Soil and Soil-Aggregate by Nuclear Methods (Shallow Depth)
ASTM D75/D75M	(2009) Standard Practice for Sampling Aggregates

VIRGINIA DEPARTMENT OF TRANSPORTATION (VDOT)

Section 208	(2007) Road and Bridge Specifications

1.2 DEFINITIONS

For the purposes of this specification, the following definitions apply.

1.2.1 Aggregate Base Course

Aggregate base course (ABC) is well graded, durable aggregate uniformly moistened and mechanically stabilized by compaction.

1.2.2 Degree of Compaction

Degree of compaction required, except as noted in the second sentence, is expressed as a percentage of the maximum laboratory dry density obtained by the test procedure presented in ASTM D1557 abbreviated as a percent of laboratory maximum dry density. Since ASTM D1557 applies only to soils that have 30 percent or less by weight of their particles retained on the 3/4 inch sieve, the degree of compaction for material having more than 30 percent by weight of their particles retained on the 3/4 inch sieve are expressed as a percentage of the laboratory maximum dry density in accordance with AASHTO T 180 Method D and corrected with AASHTO T 224.

1.3 SYSTEM DESCRIPTION

All plant, equipment, and tools used in the performance of the work will be subject to approval before the work is started and shall be maintained in satisfactory working condition at all times. Submit a list of proposed equipment, including descriptive data. Provide adequate equipment having the capability of producing the required compaction, meeting grade controls, thickness control, and smoothness requirements as set forth herein.

1.4 SUBMITTALS

Government approval is required for submittals with a "G" designation; submittals not having a "G" designation are for Contractor Quality Control approval. Submit the following in accordance with Section 01 33 00 SUBMITTAL PROCEDURES:

SD-03 Product Data

Plant, Equipment, and Tools

SD-06 Test Reports

Sampling and Testing; G
Field Density Tests; G

1.5 QUALITY ASSURANCE

Sampling and testing are the responsibility of the Contractor and performed by a testing laboratory approved in accordance with Section 01 45 00.00 20 QUALITY CONTROL. Work requiring testing will not be permitted until the testing laboratory has been inspected and approved. Test the materials to establish compliance with the specified requirements; perform testing at the specified frequency. The Contracting Officer may specify the time and location of the tests. Furnish copies of test results to the Contracting Officer within 24 hours of completion of the tests.

1.5.1 Sampling

Take samples for laboratory testing in conformance with ASTM D75/D75M. When deemed necessary, the sampling will be observed by the Contracting

Officer.

1.5.2 Tests

Perform tests in conformance with VDOT Section 208, Paragraph 208.03.

1.5.2.1 Moisture-Density Determinations

Determine the laboratory maximum dry density and optimum moisture content in accordance with AASHTO T 180, Method D and corrected with AASHTO T 224.

1.5.2.2 Field Density Tests

Measure field density in accordance with ASTM D1556, ASTM D2167 or ASTM D6938. For the method presented in ASTM D1556 use the base plate as shown in the drawing. For the method presented in ASTM D6938 check the calibration curves and adjust them, if necessary, using only the sand cone method as described in paragraph Calibration, of the ASTM publication. Tests performed in accordance with ASTM D6938 result in a wet unit weight of soil, and ASTM D6938 shall be used to determine the moisture content of the soil. The calibration curves furnished with the moisture gauges shall also be checked along with density calibration checks as described in ASTM D6938. The calibration checks of both the density and moisture gauges shall be made by the prepared containers of material method, as described in paragraph Calibration of ASTM D6938, on each different type of material being tested at the beginning of a job and at intervals as directed.

a. Submit certified copies of test results for approval not less than 30 days before material is required for the work.

b. Submit calibration curves and related test results prior to using the device or equipment being calibrated.

c. Submit copies of field test results within 24 hours after the tests are performed.

1.5.3 Testing Frequency

1.5.3.1 Initial Tests

Perform one of each of the following tests, on the proposed material prior to commencing construction, to demonstrate that the proposed material meets all specified requirements when furnished. If materials from more than one source are going to be utilized, this testing shall be completed for each source.

a. Sieve Analysis.

b. Liquid limit and plasticity index.

c. Moisture-density relationship.

d. Wear.

1.5.3.2 In Place Tests

Perform each of the following tests on samples taken from the placed and compacted ABC. Samples shall be taken and tested at the rates indicated.

a. Perform density tests on every lift of material placed and at a frequency of one set of tests for every 250 square yards, or portion thereof, of completed area.

b. Perform sieve analysis on every lift of material placed and at a frequency of one sieve analysis for every 500 square yards, or portion thereof, of material placed.

c. Perform liquid limit and plasticity index tests at the same frequency as the sieve analysis.

d. Measure the total thickness of the base course at intervals, in such a manner as to ensure one measurement for each 250 square yards of base course. Measurements shall be made in 3 inch diameter test holes penetrating the base course.

1.5.4 Approval of Material

Select the source of the material 30 days prior to the time the material will be required in the work. Tentative approval of material will be based on initial test results. Final approval of the materials will be based on sieve analysis, liquid limit, and plasticity index tests performed on samples taken from the completed and fully compacted course(s).

1.6 ENVIRONMENTAL REQUIREMENTS

Perform construction when the atmospheric temperature is above 35 degrees F. When the temperature falls below 35 degrees F, protect all completed areas by approved methods against detrimental effects of freezing. Correct completed areas damaged by freezing, rainfall, or other weather conditions to meet specified requirements.

PART 2 PRODUCTS

Provide ABC conforming to VDOT Section 208, Size No. 21B, Aggregate Base Type 1.

PART 3 EXECUTION

3.1 GENERAL REQUIREMENTS

When the ABC is constructed in more than one layer, clean the previously constructed layer of loose and foreign matter by sweeping with power sweepers or power brooms, except that hand brooms may be used in areas where power cleaning is not practicable. Provide adequate drainage during the entire period of construction to prevent water from collecting or standing on the working area. Provide line and grade stakes as necessary for control. Grade stakes shall be in lines parallel to the centerline of the area under construction and suitably spaced for string lining.

3.2 OPERATION OF AGGREGATE SOURCES

Clearing, stripping, and excavating are the responsibility of the Contractor. Operate the aggregate sources to produce the quantity and quality of materials meeting the specified requirements in the specified time limit. Aggregate sources on private lands shall be conditioned in agreement with local laws or authorities.

3.3 STOCKPILING MATERIAL

Clear and level storage sites prior to stockpiling of material. Stockpile all materials, including approved material available from excavation and grading, in the manner and at the locations designated. Aggregates shall be stockpiled on the cleared and leveled areas designated by the Contracting Officer to prevent segregation. Materials obtained from different sources shall be stockpiled separately.

3.4 PREPARATION OF UNDERLYING COURSE

Prior to constructing the base course(s), the underlying course or subgrade shall be cleaned of all foreign substances. At the time of construction of the base course(s), the underlying course shall contain no frozen material. The surface of the underlying course or subgrade shall meet specified compaction and surface tolerances. The underlying course shall conform to Section 31 23 00.00 20 EXCAVATION AND FILL. Ruts or soft yielding spots in the underlying courses, areas having inadequate compaction, and deviations of the surface from the requirements set forth herein shall be corrected by loosening and removing soft or unsatisfactory material and by adding approved material, reshaping to line and grade, and recompacting to specified density requirements. For cohesionless underlying courses containing sands or gravels, as defined in ASTM D2487, the surface shall be stabilized prior to placement of the base course(s). Stabilization shall be accomplished by mixing ABC into the underlying course and compacting by approved methods. The stabilized material shall be considered as part of the underlying course and shall meet all requirements of the underlying course. The finished underlying course shall not be disturbed by traffic or other operations and shall be maintained in a satisfactory condition until the base course is placed.

3.5 INSTALLATION

3.5.1 Mixing the Materials

Mix the coarse and fine aggregates in a stationary plant, or in a traveling plant or bucket loader on an approved paved working area. Make adjustments in mixing procedures or in equipment, as directed, to obtain true grades, to minimize segregation or degradation, to obtain the required water content, and to insure a satisfactory base course meeting all requirements of this specification.

3.5.2 Placing

Place the mixed material on the prepared subgrade or subbase in layers of uniform thickness with an approved spreader. When a compacted layer 6 inches or less in thickness is required, place the material in a single layer. When a compacted layer in excess of 6 inches is required, place the material in layers of equal thickness. No layer shall be thicker than 6 inches or thinner than 3 inches when compacted. The layers shall be so placed that when compacted they will be true to the grades or levels required with the least possible surface disturbance. Where the base course is placed in more than one layer, the previously constructed layers shall be cleaned of loose and foreign matter by sweeping with power sweepers, power brooms, or hand brooms, as directed. Such adjustments in placing procedures or equipment shall be made as may be directed to obtain true grades, to minimize segregation and degradation, to adjust the water content, and to insure an acceptable base course.

3.5.3 Grade Control

The finished and completed base course shall conform to the lines, grades, and cross sections shown. Underlying material(s) shall be excavated and prepared at sufficient depth for the required base course thickness so that the finished base course and the subsequent surface course will meet the designated grades.

3.5.4 Edges of Base Course

The base course(s) shall be placed so that the completed section will be a minimum of 2 feet wider, on all sides, than the next layer that will be placed above it. Additionally, place approved fill material along the outer edges of the base course in sufficient quantities to compact to the thickness of the course being constructed, or to the thickness of each layer in a multiple layer course, allowing in each operation at least a 2 foot width of this material to be rolled and compacted simultaneously with rolling and compacting of each layer of base course. If this base course material is to be placed adjacent to another pavement section, then the layers for both of these sections shall be placed and compacted along this edge at the same time.

3.5.5 Compaction

Compact each layer of the base course, as specified, with approved compaction equipment. Maintain water content during the compaction procedure to within plus or minus 2 percent of the optimum water content determined from laboratory tests as specified in this Section. Begin rolling at the outside edge of the surface and proceed to the center, overlapping on successive trips at least one-half the width of the roller. Alternate trips of the roller shall be slightly different lengths. Speed of the roller shall be such that displacement of the aggregate does not occur. In all places not accessible to the rollers, the mixture shall be compacted with hand-operated power tampers. Continue compaction until each layer has a degree of compaction that is at least 100 percent of laboratory maximum density through the full depth of the layer. Make such adjustments in compacting or finishing procedures as may be directed to obtain true grades, to minimize segregation and degradation, to reduce or increase water content, and to ensure a satisfactory base course. Any materials that are found to be unsatisfactory shall be removed and replaced with satisfactory material or reworked, as directed, to meet the requirements of this specification.

3.5.6 Thickness

Construct the compacted thickness of the base course as indicated. No individual layer shall be thicker than 6 inches nor be thinner than 3 inchesin compacted thickness. The total compacted thickness of the base course(s) shall be within 1/2 inch of the thickness indicated. Where the measured thickness is more than 1/2 inch deficient, correct such areas by scarifying, adding new material of proper gradation, reblading, and recompacting as directed. Where the measured thickness is more than 1/2 inch thicker than indicated, the course shall be considered as conforming to the specified thickness requirements. Average job thickness shall be the average of all thickness measurements taken for the job, but shall be within 1/4 inch of the thickness indicated. The total thickness of the base course shall be measured at intervals in such a manner as to ensure one measurement for each 500 square yards of base course. Measurements

shall be made in 3 inch diameter test holes penetrating the base course.

3.5.7 Finishing

The surface of the top layer of base course shall be finished after final compaction by cutting any overbuild to grade and rolling with a steel-wheeled roller. Thin layers of material shall not be added to the top layer of base course to meet grade. If the elevation of the top layer of base course is 1/2 inch or more below grade, then the top layer should be scarified to a depth of at least 3 inches and new material shall be blended in and compacted rolled to bring to grade. Adjustments to rolling and finishing procedures shall be made as directed to minimize segregation and degradation, obtain grades, maintain moisture content, and insure an acceptable base course. Should the surface become rough, corrugated, uneven in texture, or traffic marked prior to completion, the unsatisfactory portion shall be scarified, reworked and recompacted or it shall be replaced as directed.

3.5.8 Smoothness

The surface of the top layer shall show no deviations in excess of 3/8 inch when tested with a 12 foot straightedge. Take measurements in successive positions parallel to the centerline of the area to be paved. Measurements shall also be taken perpendicular to the centerline at 50 foot intervals. Deviations exceeding this amount shall be corrected by removing material and replacing with new material, or by reworking existing material and compacting it to meet these specifications.

3.6 TRAFFIC

Completed portions of the base course may be opened to limited traffic, provided there is no marring or distorting of the surface by the traffic. Heavy equipment shall not be permitted except when necessary to construction, and then the area shall be protected against marring or damage to the completed work.

3.7 MAINTENANCE

Maintain the base course in a satisfactory condition until the full pavement section is completed and accepted. Maintenance shall include immediate repairs to any defects and shall be repeated as often as necessary to keep the area intact. Any base course that is not paved over prior to the onset of winter, shall be retested to verify that it still complies with the requirements of this specification. Any area of base course that is damaged shall be reworked or replaced as necessary to comply with this specification.

3.8 DISPOSAL OF UNSATISFACTORY MATERIALS

Any unsuitable materials that must be removed shall be disposed of outside the limits of Government-controlled land areas indicated. No additional payments will be made for materials that must be replaced.

-- End of Section --

SECTION 32 12 10

BITUMINOUS TACK AND PRIME COATS
08/08

PART 1 GENERAL

1.1 REFERENCES

The publications listed below form a part of this specification to the extent referenced. The publications are referred to within the text by the basic designation only.

AMERICAN ASSOCIATION OF STATE HIGHWAY AND TRANSPORTATION OFFICIALS (AASHTO)

AASHTO T 102	(2009) Standard Method of Test for Spot Test of Asphaltic Materials
AASHTO T 40	(2002; R 2006) Sampling Bituminous Materials

ASTM INTERNATIONAL (ASTM)

ASTM D140/D140M	(2009) Standard Practice for Sampling Bituminous Materials
ASTM D2397	(2005) Standard Specification for Cationic Emulsified Asphalt
ASTM D2995	(1999; R 2009) Determining Application Rate of Bituminous Distributors
ASTM D977	(2013) Emulsified Asphalt

1.2 SYSTEM DESCRIPTION

1.2.1 General Requirements

Plant, equipment, machines and tools used in the work are subject to approval and shall be maintained in a satisfactory working condition at all times. Calibrated equipment such as asphalt distributors, scales, batching equipment, spreaders and similar equipment, should have been recalibrated by a calibration laboratory within 12 months prior to commencing work and every 6 months thereafter, by such laboratory from the date of recalibration, during the term of the contract.

1.2.2 Bituminous Distributor

Provide a distributor with pneumatic tires of such size and number that the load produced on the base surface does not exceed 650 psi of tire width to prevent rutting, shoving or otherwise damaging the base surface or other layers in the pavement structure. Design and equip the distributor to spray the bituminous material in a uniform coverage at the specified temperature, at readily determined and controlled rates from 0.05 to 2.0 gallons per square yard, with a pressure range of 25 to 75 psi and with an allowable variation from the specified rate of not more than

plus or minus 5 percent, and at variable widths. Include with the distributor equipment a separate power unit for the bitumen pump, full-circulation spray bars, tachometer, pressure gauges, volume-measuring devices, adequate heaters for heating of materials to the proper application temperature, a thermometer for reading the temperature of tank contents, and a hand hose attachment suitable for applying bituminous material manually to areas inaccessible to the distributor. Equip the distributor to circulate and agitate the bituminous material during the heating process.

1.2.3 Heating Equipment for Storage Tanks

The equipment for heating the bituminous material shall be steam, electric, or hot oil heaters. Provide steam heaters consisting of steam coils and equipment for producing steam, so designed that the steam cannot get into the material. Fix an armored thermometer to the tank with a temperature range from 40 to 400 degrees F so that the temperature of the bituminous material may be determined at all times.

1.2.4 Power Brooms and Power Blowers

Use power brooms and power blowers suitable for cleaning the surfaces to which the bituminous coat is to be applied.

1.3 SUBMITTALS

Government approval is required for submittals with a "G" designation; submittals not having a "G" designation are for Contractor Quality Control approval. Submit the following in accordance with Section 01 33 00 SUBMITTAL PROCEDURES:

SD-06 Test Reports

Sampling and Testing

Copies of all test results for emulsified asphalt, and bituminous materials, within 24 hours of completion of tests. Certified copies of the manufacturer's test reports indicating temperature viscosity relationship for cutback asphalt, compliance with applicable specified requirements, not less than 30 days before the material is required in the work.

1.4 DELIVERY, STORAGE, AND HANDLING

Inspect the materials delivered to the site for contamination and damage. Unload and store the materials with a minimum of handling.

1.5 ENVIRONMENTAL REQUIREMENTS

Apply bituminous coat only when the surface to receive the bituminous coat is dry. Apply bituminous coat only when the atmospheric temperature in the shade is 50 degrees F or above and when the temperature has not been below 35 degrees F for the 12 hours prior to application, unless otherwise directed.

PART 2 PRODUCTS

2.1 PRIME COAT

Provide emulsified asphalt conforming to ASTM D977, Type SS-1 or SS1h; or ASTM D2397, Type CSS-1 or CSS-1h.

2.2 TACK COAT

Provide emulsified asphalt conforming to ASTM D977, Type SS-1 or SS1h; or ASTM D2397, Type CSS-1 or CSS-1h. Dilute the emulsified asphalt with equal parts of water. The base asphalt used to manufacture the emulsion shall show a negative spot when tested in accordance with AASHTO T 102 using standard naphtha.

PART 3 EXECUTION

3.1 PREPARATION OF SURFACE

Immediately before applying the bituminous coat, remove all loose material, dirt, clay, or other objectionable material from the surface to be treated by means of a power broom or blower supplemented with hand brooms. The surface shall be dry and clean at the time of treatment.

3.2 APPLICATION RATE

The exact quantities within the range specified, which may be varied to suit field conditions, will be determined by the Contracting Officer.

3.2.1 Tack Coat

Apply bituminous material for the tack coat in quantities of not less than 0.05 gallon nor more than 0.15 gallon per square yard of pavement surface.

3.2.2 Prime Coat

Apply bituminous material for the prime coat in quantities of not less than 0.18 gallon nor more than 0.35 gallon per square yard of pavement surface.

3.3 APPLICATION TEMPERATURE

3.3.1 Viscosity Relationship

Asphalt application temperature shall provide an application viscosity between 10 and 60 seconds, Saybolt Furol, or between 20 and 120 centistokes, kinematic. Furnish the temperature viscosity relation to the Contracting Officer.

3.3.2 Temperature Ranges

The viscosity requirements determine the application temperature to be used. The following is a normal range of application temperatures:

Emulsions	
SS-1	70-160 degrees F
SS-1h	70-160 degrees F
CSS-1	70-160 degrees F
CSS-1h	70-160 degrees F

These temperature ranges exceed the flash point of the material and care should be taken in their heating.

3.4 APPLICATION

3.4.1 General

Following preparation and subsequent inspection of the surface, apply the bituminous prime or tack coat with the Bituminous Distributor at the specified rate with uniform distribution over the surface to be treated. Properly treat all areas and spots missed by the distributor with the hand spray. Until the succeeding layer of pavement is placed, maintain the surface by protecting the surface against damage and by repairing deficient areas at no additional cost to the Government. If required, spread clean dry sand to effectively blot up any excess bituminous material. No smoking, fires, or flames other than those from the heaters that are a part of the equipment are permitted within 25 feet of heating, distributing, and transferring operations of bituminous material other than bituminous emulsions. Prevent all traffic, except for paving equipment used in constructing the surfacing, from using the underlying material, whether primed or not, until the surfacing is completed. The bituminous coat shall conform to all requirements as described herein.

3.4.2 Prime Coat

Apply a prime coat at locations shown on the Drawings. Apply the bituminous material uniformly over the surface to be treated at a pressure range of 25 to 75 psi; the rate shall be as specified above in paragraph APPLICATION RATE. To obtain uniform application of the prime coat on the surface treated at the junction of previous and subsequent applications, spread building paper on the surface for a sufficient distance back from the ends of each application to start and stop the prime coat on the paper and to ensure that all sprayers will operate at full force on the surface to be treated. Immediately after application remove and destroy the building paper.

3.4.3 Tack Coat

Apply tack coat at the locations shown on the drawings. Apply the tack coat when the surface to be treated is dry. Immediately following the preparation of the surface for treatment, apply the bituminous material by means of the bituminous distributor, within the limits of temperature specified herein and at a rate as specified above in paragraph APPLICATION RATE. Apply the bituminous material so that uniform distribution is obtained over the entire surface to be treated. Treat lightly coated areas and spots missed by the distributor with the bituminous material. Following the application of bituminous material, allow the surface to cure without being disturbed for period of time necessary to permit setting of the tack coat. Apply the bituminous tack coat only as far in advance of the placing of the overlying layer as required for that day's operation. Maintain and protect the treated surface from damage until the succeeding course of pavement is placed.

3.5 CURING PERIOD

Following application of the bituminous material and prior to application of the succeeding layer of pavement, allow the bituminous coat to cure and to obtain evaporation of any volatiles or moisture. Maintain the coated

surface until the succeeding layer of pavement is placed, by protecting the surface against damage and by repairing and recoating deficient areas. Allow the prime coat to cure without being disturbed for a period of at least 48 hours or longer, as may be necessary to attain penetration into the treated course. Furnish and spread enough sand to effectively blot up and cure excess bituminous material.

3.6 FIELD QUALITY CONTROL

Samples of the bituminous material used shall be obtained by the Contractor as directed, under the supervision of the Contracting Officer. The sample may be retained and tested by the Government at no cost to the Contractor.

3.7 SAMPLING AND TESTING

Submit copies of all test results for emulsified asphalt, and bituminous materials, within 24 hours of completion of tests. Furnish certified copies of the manufacturer's test reports indicating compliance with applicable specified requirements, not less than 30 days before the material is required in the work. Perform sampling and testing by an approved commercial testing laboratory or by facilities furnished by the Contractor. No work requiring testing will be permitted until the facilities have been inspected and approved.

3.7.1 Sampling

The samples of bituminous material, unless otherwise specified, shall be in accordance with ASTM D140/D140M or AASHTO T 40. Sources from which bituminous materials are to be obtained shall be selected and notification furnished the Contracting Officer within 15 days after the award of the contract.

3.7.2 Calibration Test

Furnish all equipment, materials, and labor necessary to calibrate the bituminous distributor. Calibration shall be made with the approved job material and prior to applying the bituminous coat material to the prepared surface. Calibrate the bituminous distributor in accordance with ASTM D2995.

3.7.3 Trial Applications

Before providing the complete bituminous coat, apply three lengths of at least 100 feet for the full width of the distributor bar to evaluate the amount of bituminous material that can be satisfactorily applied.

3.7.3.1 Tack Coat Trial Application Rate

Unless otherwise authorized, apply the trial application rate of bituminous tack coat materials in the amount of 0.05 gallons per square yard. Other trial applications shall be made using various amounts of material as may be deemed necessary.

3.7.3.2 Prime Coat Trial Application Rate

Unless otherwise authorized, apply the trial application rate of bituminous materials in the amount of 0.25 gallon per square yard. Other trial applications shall be made using various amounts of material as may

be deemed necessary.

3.7.4 Sampling and Testing During Construction

Perform quality control sampling and testing as required in paragraph FIELD QUALITY CONTROL.

3.8 TRAFFIC CONTROLS

Keep traffic off surfaces freshly treated with bituminous material. Provide sufficient warning signs and barricades so that traffic will not travel over freshly treated surfaces.

-- End of Section --

SECTION 32 12 17

HOT MIX BITUMINOUS PAVEMENT
04/08

PART 1 GENERAL

1.1 REFERENCES

The publications listed below form a part of this specification to the extent referenced. The publications are referred to within the text by the basic designation only.

ASTM INTERNATIONAL (ASTM)

ASTM C117	(2013) Standard Test Method for Materials Finer than 75-um (No. 200) Sieve in Mineral Aggregates by Washing
ASTM C127	(2012) Standard Test Method for Density, Relative Density (Specific Gravity), and Absorption of Coarse Aggregate
ASTM C128	(2012) Standard Test Method for Density, Relative Density (Specific Gravity), and Absorption of Fine Aggregate
ASTM C131	(2006) Standard Test Method for Resistance to Degradation of Small-Size Coarse Aggregate by Abrasion and Impact in the Los Angeles Machine
ASTM C136	(2006) Standard Test Method for Sieve Analysis of Fine and Coarse Aggregates
ASTM C188	(2009) Standard Test Method for Density of Hydraulic Cement
ASTM C29/C29M	(2009) Standard Test Method for Bulk Density ("Unit Weight") and Voids in Aggregate
ASTM C88	(2013) Standard Test Method for Soundness of Aggregates by Use of Sodium Sulfate or Magnesium Sulfate
ASTM D1188	(2007; E 2010) Bulk Specific Gravity and Density of Compacted Bituminous Mixtures Using Paraffin-Coated Specimens
ASTM D140/D140M	(2009) Standard Practice for Sampling Bituminous Materials
ASTM D2041/D2041M	(2011) Theoretical Maximum Specific Gravity and Density of Bituminous Paving Mixtures
ASTM D2172/D2172M	(2011) Quantitative Extraction of Bitumen

	from Bituminous Paving Mixtures
ASTM D2726/D2726M	(2013) Bulk Specific Gravity and Density of Non-Absorptive Compacted Bituminous Mixtures
ASTM D3666	(2011) Standard Specification for Minimum Requirements for Agencies Testing and Inspecting Road and Paving Materials
ASTM D4867/D4867M	(2009) Effect of Moisture on Asphalt Concrete Paving Mixtures
ASTM D546	(2010) Sieve Analysis of Mineral Filler for Bituminous Paving Mixtures
ASTM D6927	(2006) Standard Test Method for Marshall Stability and Flow of Bituminous Mixtures
ASTM D70	(2009; E 2009) Specific Gravity and Density of Semi-Solid Bituminous Materials (Pycnometer Method)
ASTM D75/D75M	(2009) Standard Practice for Sampling Aggregates
ASTM D854	(2010) Specific Gravity of Soil Solids by Water Pycnometer
ASTM D979/D979M	(2012) Sampling Bituminous Paving Mixtures

VIRGINIA DEPARTMENT OF TRANSPORTATION (VDOT)

Section 211	(2007) Road and Bridge Specifications
Section 315	(2007) Road and Bridge Specifications

1.2 SUBMITTALS

Government approval is required for submittals with a "G" designation; submittals not having a "G" designation are for Contractor Quality Control approval. The following shall be submitted in accordance with Section 01 33 00 SUBMITTAL PROCEDURES:

SD-05 Design Data

Job-mix formula; G

Submit in accordance with VDOT Section 211

Asphalt Cement Binder

Mix Design

SD-06 Test Reports

Specific gravity test of asphalt; G

Coarse aggregate tests; G

Weight of slag test; G

Percent of crushed pieces in gravel; G

Fine aggregate tests; G

Specific gravity of mineral filler; G

Bituminous mixture tests; G

Aggregates tests; G

Bituminous mix tests; G

Pavement courses; G

1.3 QUALITY ASSURANCE

1.3.1 Safety Requirements

Provide adequate and safe stairways with handrails to the mixer platform, and safe and protected ladders or other means for accessibility to plant operations. Guard equipment and exposed steam or other high temperature lines or cover with a suitable type of insulation.

1.4 DELIVERY, STORAGE, AND HANDLING

Inspect materials delivered to the site for damage and store with a minimum of handling. Store aggregates in such a manner as to prevent segregation, contamination, or intermixing of the different aggregate sizes.

1.5 ENVIRONMENTAL CONDITIONS

Place bituminous mixture only during dry weather and on dry surfaces. Place courses only when the surface temperature of the underlying course is greater than 45 degrees F for course thicknesses greater than one inch and 55 degrees F for course thicknesses one inch or less.

1.6 CONSTRUCTION EQUIPMENT

Calibrated equipment, such as scales, batching equipment, spreaders and similar equipment, shall have been recalibrated by a calibration laboratory approved by the Contracting Officer within 12 months of commencing work.

1.6.1 Paving Equipment

1.6.1.1 Spreading Equipment

Self-propelled electronically controlled type, unless other equipment is authorized by the Contracting Officer. Equip spreading equipment of the self-propelled electronically controlled type with hoppers, tamping or vibrating devices, distributing screws, electronically adjustable screeds, and equalizing devices. Capable of spreading hot bituminous mixtures without tearing, shoving, or gouging and to produce a finished surface of specified grade and smoothness. Operate spreaders, when laying mixture, at variable speeds between 5 and 45 feet per minute. Design spreader with a quick and efficient steering device; a forward and reverse traveling speed; and automatic devices to adjust to grade and confine the edges of the

mixture to true lines. The use of a spreader that leaves indented areas or other objectionable irregularities in the fresh laid mix during operations is prohibited.

1.6.1.2 Rolling Equipment

Self-propelled pneumatic-tired rollers supplemented by three-wheel and tandem type steel wheel rollers. The number, type and weight of rollers shall be sufficient to compact the mixture to the required density without detrimentally affecting the compacted material. Rollers shall be suitable for rolling hot-mix bituminous pavements and capable of reversing without backlash. Pneumatic-tired rollers shall be capable of being operated both forward and backward without turning on the mat, and without loosening the surface being rolled. Equip rollers with suitable devices and apparatus to keep the rolling surfaces wet and prevent adherence of bituminous mixture. Vibratory rollers especially designed for bituminous concrete compaction may be used provided rollers do not impair stability of pavement structure and underlying layers. Repair depressions in pavement surfaces resulting from use of vibratory rollers. Rollers shall be self-propelled, single or dual vibrating drums, and steel drive wheels, as applicable; equipped with variable amplitude and separate controls for energy and propulsion.

1.6.1.3 Hand Tampers

Minimum weight of 25 pounds with a tamping face of not more than 50 square inches.

1.6.1.4 Mechanical Hand Tampers

Commercial type, operated by pneumatic pressure or by internal combustion.

PART 2 PRODUCTS

2.1 ASPHALT CONCRETE

Conform to VDOT Section 211. The Base Course shall be Mix Type BM-25.OA, and the Surface Course shall be Mix Type SM-12.5A.

2.2 ASPHALT CEMENT BINDER

Asphalt cement binder shall conform to VDOT Section 211. Test data indicating grade certification shall be provided by the supplier at the time of delivery of each load to the mix plant. Copies of these certifications shall be submitted to the Contracting OfficerEngineer. The supplier is defined as the last source of any modification to the binder. The Contracting OfficerEngineer may sample and test the binder at the mix plant at any time before or during mix production. Samples for this verification testing shall be obtained by the Contractor in accordance with ASTM D140/D140M and in the presence of the Contracting OfficerEngineer. These samples shall be furnished to the Contracting OfficerEngineer for the verification testing, which shall be at no cost to the Contractor. Samples of the asphalt cement specified shall be submitted for approval not less than 14 days before start of the test section.

2.3 MIX DESIGN

The Contractor shall develop the mix design. The asphalt mix shall be composed of a mixture of well-graded aggregate, mineral filler if required, and asphalt material. The aggregate fractions shall be sized, handled in

separate size groups, and combined in such proportions that the resulting mixture meets the grading requirements of the job mix formula (JMF). No hot-mix asphalt for payment shall be produced until a JMF has been approved.

2.3.1 JMF Requirements

The Job-mix formula shall be submitted in writing by the Contractor for approval at least 14 days prior to the start of the test section.

2.3.1.1 Adjustments to JMF

The JMF for each mixture shall be in effect until a new formula is approved in writing by the Contracting Officer. Should a change in sources of any materials be made, a new mix design shall be performed and a new JMF approved before the new material is used. The Contractor will be allowed to adjust the JMF within the limits specified below to optimize mix volumetric properties. Adjustments to the JMF shall be limited to plus or minus 3 percent on the 1/2 inch, No. 4, and No. 8 sieves; plus or minus 1.0 percent on the No. 200 sieve; and plus or minus 0.40 percent binder content. If adjustments are needed that exceed these limits, a new mix design shall be developed. Tolerances given above may permit the aggregate grading to be outside the limits shown in Table I; this is acceptable.

2.4 SOURCE QUALITY CONTROL

Employ a commercial laboratory approved by the Contracting Officer to perform testing. The laboratory used to develop the JMF and the laboratory used to perform all sampling and testing shall meet the requirements of ASTM D3666. A certification signed by the manager of the laboratory stating that it meets these requirements or clearly listing all deficiencies shall be submitted to the Contracting Officer prior to the start of construction. The certification shall contain as a minimum:

a. Qualifications of personnel; laboratory manager, supervising technician, and testing technicians.

b. A listing of equipment to be used in developing the job mix.

c. A copy of the laboratory's quality control system.

d. Evidence of participation in the AASHTO Materials Reference Laboratory (AMRL) program.

2.4.1 Tests

Perform testing in accordance with the following:

a. Specific Gravity Test of Asphalt: ASTM D70

b. Coarse Aggregate Tests:

(1) Bulk Specific Gravity: ASTM C127

(2) Abrasion Loss: ASTM C131

(3) Soundness Loss: ASTM C88

c. Weight of Slag Test: ASTM C29/C29M

d. Percent of Crushed Pieces in Gravel: Count by observation and weight

e. Fine Aggregate Tests:

(1) Bulk Specific Gravity: ASTM C128

(2) Soundness Loss: ASTM C88

f. Specific Gravity of Mineral Filler: ASTM C188 or ASTM D854

g. Bituminous Mixture Tests:

(1) Bulk Specific Gravity: ASTM D1188 or ASTM D2726/D2726M

(2) Theoretical Maximum Specific Gravity: ASTM D2041/D2041M

(3) Tensile Strength Ratio: ASTM D4867/D4867M

PART 3 EXECUTION

3.1 PREPARATION

3.1.1 Preparation of Asphalt Binder Material

The asphalt cement material shall be heated avoiding local overheating and providing a continuous supply of the asphalt material to the mixer at a uniform temperature. The temperature of unmodified asphalts shall be no more than 160 degrees C 325 degrees F when added to the aggregates. Modified asphalts shall be no more than 174 degrees C 350 degrees F when added to the aggregate.

3.1.2 Preparation of Mineral Aggregates

Store different size aggregate in separate stockpiles so that different sizes will not mix. Stockpile different-sized aggregates in uniform layers by use of a clam shell or other approved method so as to prevent segregation. The use of bulldozers in stockpiling of aggregate or in feeding aggregate to the dryer is prohibited. Feed aggregates into the cold elevator by means of separate mechanical feeders so that aggregates are graded within requirements of the job-mix formulas and tolerances specified. Regulate rates of feed of the aggregates so that moisture content and temperature of aggregates are within tolerances specified herein. Dry and heat aggregates to the temperature necessary to achieve the mixture determined by the job mix formula within the job tolerance specified. Provide adequate dry storage for mineral filler.

3.1.3 Preparation of Bituminous Mixture

Accurately weigh aggregates and dry mineral filler and convey into the mixer in the proportionate amounts of each aggregate size required to meet the job-mix formula. In batch mixing, after aggregates and mineral filler have been introduced into the mixer and mixed for not less than 15 seconds, add asphalt by spraying or other approved methods and continue mixing for a period of not less than 20 seconds, or as long as required to obtain a homogeneous mixture. The time required to add or spray asphalt into the mixer will not be added to the total wet-mixing time provided the operation does not exceed 10 seconds and a homogeneous mixture is obtained. When a continuous mixer is employed, mixing time shall be more than 35 seconds to obtain a homogeneous mixture. Additional mixing time, when required, will

be as directed by the Contracting Officer. When mixture is prepared in a twin-pugmill mixer, volume of the aggregates, mineral filler, and asphalt shall not extend above tips of mixer blades when blades are in a vertical position. Overheated and carbonized mixtures, or mixtures that foam or show indication of free moisture, will be rejected. When free moisture is detected in batch or continuous mix plant produced mixtures, waste the mix and withdraw the aggregates in the hot bins immediately and return to the respective stockpiles; for drum-dryer mixer plants, waste the mix, including that in surge or storage bins that is affected by free moisture.

3.1.4 Transportation of Bituminous Mixtures

Transport bituminous material from the mixing plant to the paving site in trucks having tight, clean, smooth beds that have been coated with a minimum amount of concentrated solution of hydrated lime and water or other approved coating to prevent adhesion of the mixture to the truck. Petroleum products will not be permitted for coating truck. If air temperature is less than 60 degrees F or if haul time is greater than 30 minutes, cover each load with canvas or other approved material of ample size to protect the mixture from the loss of heat. Make deliveries so that the spreading and rolling of all the mixture prepared for one day's run can be completed during daylight, unless adequate approved artificial lighting is provided. Deliver mixture to area to be paved so that the temperature at the time of dumping into the spreader is within the range specified herein. Reject loads that are below minimum temperature, that have crusts of cold unworkable material, or that have been wet excessively by rain. Hauling over freshly laid material is prohibited.

3.1.5 Surface Preparation of Underlying Course

Prior to the laying of the asphalt concrete, clean underlying course of foreign or objectionable matter with power blowers or power brooms, supplemented by hand brooms and other cleaning methods where necessary. During the placement of multiple lifts of bituminous concrete, each succeeding lift of bituminous concrete shall have its underlying lift cleaned and provided with a bituminous tack coat if the time period between the placement of each lift of bituminous concrete exceeds 14 days, or the underlying bituminous concrete has become dirty. Remove grass and other vegetative growth from existing cracks and surfaces.

3.1.6 Spraying of Contact Surfaces

Spray contact surfaces of previously constructed pavement with a thin coat of bituminous materials to act as an anti-stripping agent, conforming to Section 32 12 10 BITUMINOUS TACK AND PRIME COATS. Paint contact surfaces of structures with a thin coat of emulsion or other approved bituminous material prior to placing the bituminous mixture. Tack coat the previously placed primed coats on base courses when surface has become excessively dirty and cannot be cleaned or when primed surface has cured to the extent that it has lost all bonding effect.

3.2 PLACEMENT

3.2.1 Machine Spreading

Conform to VDOT Section 315.

3.2.2 Shoveling, Raking, and Tamping After Machine-Spreading

Shovelers and rakers shall follow the spreading machine. Add or remove hot mixture and rake the mixture as required to obtain a course that when completed will conform to requirements specified herein. Broadcasting or fanning of mixture over areas being compacted is prohibited. When segregation occurs in the mixture during placing, suspend spreading operation until the cause is determined and corrected. Correct irregularities in alignment left by the spreader by trimming directly behind the machine. Immediately after trimming, compact edges of the course by tamping laterally with a metal lute or by other approved methods. Distortion of the course during tamping is prohibited.

3.2.3 Hand-Spreading in Lieu of Machine-Spreading

In areas where the use of machine spreading is impractical, spread mixture by hand. The range of temperatures of the mixtures when dumped onto the area to be paved shall be between 250 and 300 degrees F. Mixtures having temperatures less than minimum spreading temperature when dumped onto the area to be paved will be rejected. Spread hot mixture with rakes in a uniformly loose layer of a thickness that, when compacted, will conform to the required grade, thickness, and smoothness. During hand spreading, place each shovelful of mixture by turning the shovel over in a manner that will prevent segregation. Do not place mixture by throwing or broadcasting from a shovel. Do not dump loads any faster than can be properly handled by the shovelers and rakers.

3.3 COMPACTION OF MIXTURE

Conform to VDOT Section 315.

3.4 JOINTS

Joints shall present the same texture and smoothness as other portions of the course, except permissible density at the joint may be up to 2 percent less than the specified course density. Carefully make joints between old and new pavement or within new pavements in a manner to ensure a thorough and continuous bond between old and new sections of the course. Vertical contact surfaces of previously constructed sections that are coated with dust, sand, or other objectionable material shall be painted with a thin uniform coat of emulsion or other approved bituminous material just before placing fresh mixture.

3.4.1 Transverse

Roller shall pass over unprotected end of freshly laid mixture only when laying of course is to be discontinued. Except when an approved bulkhead is used, cut back the edge of previously laid course to expose an even, vertical surface for the full thickness of the course. When required, rake fresh mixture against joints, thoroughly tamp with hot tampers, smooth with hot smoothers, and roll. Transverse joints in adjacent lanes shall be offset a minimum of 2 feet.

3.4.2 Longitudinal Joints

Space 6 inches apart. Do not allow joints to coincide with joints of existing pavement or previously placed courses. Spreader screed shall overlap previously placed lanes 2 to 3 inches and be of such height to permit compaction to produce a smooth dense joint. With a lute, push back

mixture placed on the surface of previous lanes to the joint edge. Do not scatter mix. Remove and waste excess material. When edges of longitudinal joints are irregular, honeycombed, or poorly compacted, cut back unsatisfactory sections of joint and expose an even vertical surface for the full thickness of the course. When required, rake fresh mixture against joint, thoroughly tamp with hot tampers, smooth with hot smoothers, and roll while hot.

3.5 FIELD QUALITY CONTROL

3.5.1 Sampling

3.5.1.1 Aggregates At Source

Prior to production and delivery of aggregates, take at least one initial sample in accordance with ASTM D75/D75M from each stockpile. Collect each sample by taking three incremental samples at random from the source material to make a composite sample of not less than 50 pounds. Repeat the sampling when the material source changes or when testing reveals unacceptable deficiencies or variations from the specified grading of materials.

3.5.1.2 Cold Feed Aggregate Sampling

Take two samples daily from the belt conveying materials from the cold feed. Collect materials in three increments at random to make a representative composite sample of not less than 50 pounds. Take samples in accordance with ASTM D75/D75M.

3.5.1.3 Coarse and Fine Aggregates

Take a 50 pound sample from the cold feed at least once daily for sieve analyses and specific gravity tests. Additional samples may be required to perform more frequent tests when analyses show deficiencies, or unacceptable variances or deviations. The method of sampling is as specified herein for aggregates.

3.5.1.4 Mineral Filler

ASTM D546. Take samples large enough to provide ample material for testing.

3.5.1.5 Pavement and Mixture

Take plant samples for the determination of mix properties and field samples for thickness and density of the completed pavements. Furnish tools, labor and material for samples, and satisfactory replacement of pavement. Take samples and tests at not less than frequency specified hereinafter and at the beginning of plant operations; for each day's work as a minimum; each change in the mix or equipment; and as often as directed. Accomplish sampling in accordance with ASTM D979/D979M.

3.5.2 Testing

3.5.2.1 Aggregates Tests

a. Gradation: ASTM C136.

b. Mineral Filler Content: ASTM D546.

c. Abrasion: ASTM C131 for wear (Los Angeles test). Perform one test initially prior to incorporation into the work and each time the source is changed.

3.5.2.2 Bituminous Mix Tests

Test one sample for each 500 tons, or fraction thereof, of the uncompacted mix for extraction in accordance with ASTM D2172/D2172M; perform a sieve analysis on each extraction sample in accordance with ASTM C136 and ASTM C117. Test one sample for each 500 tons or fraction thereof for stability and flow in accordance with ASTM D6927. Test one sample for each material blend for Tensile Strength Ratio in accordance with ASTM D4867/D4867M.

3.5.2.3 Pavement Courses

Perform density, thickness, smoothness, finish grades, and finish surface texture of weaving courses in conformance with VDOT Section 315.

3.6 PROTECTION

Do not permit vehicular traffic, including heavy equipment, on pavement until surface temperature has cooled to at least 120 degrees F. Measure surface temperature by approved surface thermometers or other satisfactory methods.

-- End of Section --

SECTION 32 17 23.00 20

PAVEMENT MARKINGS
04/06

PART 1 GENERAL

1.1 REFERENCES

The publications listed below form a part of this specification to the extent referenced. The publications are referred to in the text by the basic designation only.

INTERNATIONAL CONCRETE REPAIR INSTITUTE (ICRI)

ICRI 03732	(1997) Selecting and Specifying Concrete Surface Preparation for Sealers, Coatings, and Polymer Overlays

U.S. GENERAL SERVICES ADMINISTRATION (GSA)

FS TT-B-1325	(Rev D; Notice 1) Beads (Glass Spheres) Retro-Reflective (Metric)
FS TT-P-1952	(Rev E) Paint, Traffic and Airfield Markings, Waterborne

1.2 SUBMITTALS

Government approval is required for submittals with a "G" designation; submittals not having a "G" designation are for Contractor Quality Control approval. The following shall be submitted in accordance with Section 01 33 00 SUBMITTAL PROCEDURES:

SD-03 Product Data

Reflective media for roads and streets

Paints for roads and streets

Equipment; G

Lists of proposed equipment, including descriptive data, and notifications of proposed Contractor actions as specified in this section. List of removal equipment shall include descriptive data indicating area of coverage per pass, pressure adjustment range, tank and flow capacities, and safety precautions required for the equipment operation.

Qualifications

Documentation on personnel qualifications, as specified.

SD-06 Test Reports

Reflective media for roads and streets

Paints for roads and streets

Certified reports from sampling and testing made in accordance with paragraph entitled "Sampling and Testing" prior to the use of the materials at the jobsite. Testing shall be performed in an approved independent laboratory.

SD-07 Certificates

Reflective media for roads and streets

Paints for roads and streets

Construction equipment list

SD-08 Manufacturer's Instructions

Paints for roads and streets

1.3 DELIVERY AND STORAGE

Deliver paints and paint materials in original sealed containers that plainly show the designated name, specification number, batch number, color, date of manufacture, manufacturer's directions, and name of manufacturer. Provide storage facilities at the job site, only in areas approved by the Contracting Officer or authorized representative, for maintaining materials at temperatures recommended by the manufacturer. Make available paint stored at the project site or segregated at the source for sampling not less than 30 days prior to date of required approval for use to allow sufficient time for testing. Notify the Contracting Officer when paint is available for sampling.

1.4 WEATHER LIMITATIONS

Apply paint to clean, dry surfaces, and unless otherwise approved, only when the air and pavement surface temperature is at least 5 degrees above the dew point and the air and pavement temperatures are above 40 degrees F and less than 95 degrees F for oil-based materials; above 50 degrees F and less than 110 degrees F for water-based materials. Maintain paint temperature within these same limits.

1.5 EQUIPMENT

Machines, tools, and equipment used in the performance of the work shall be approved by the Contracting Officer and maintained in satisfactory operating condition. Submit construction equipment list for approval by the Contracting Officer.

1.5.1 Mobile and Maneuverable

Application equipment shall be mobile and maneuverable to the extent that straight lines can be followed and normal curves can be made in a true arc.

1.5.2 Paint Application Equipment

1.5.2.1 Hand-Operated, Push-Type Machines

Provide hand-operated push-type applicator machine of a type commonly used for application of paint to pavement surfaces. Paint applicator machine

shall be acceptable for marking small street and parking areas. Applicator machine shall be equipped with the necessary paint tanks and spraying nozzles, and shall be capable of applying paint uniformly at coverage specified. Applicator for water-based markings shall be equipped with non-stick coated hoses; metal parts in contact with the paint material shall be constructed of grade 302, 304, 316, or equal stainless steel.

1.5.3 Reflective Media Dispenser

The dispenser for applying the reflective media shall be attached to the paint dispenser and shall operate automatically and simultaneously with the applicator through the same control mechanism. The dispenser shall be capable of adjustment and designed to provide uniform flow of reflective media over the full length and width of the stripe at the rate of coverage specified in paragraph APPLICATION, at all operating speeds of the applicator to which it is attached.

1.5.4 Surface Preparation Equipment

1.5.4.1 Sandblasting Equipment

Sandblasting equipment shall include an air compressor, hoses, and nozzles of proper size and capacity as required for cleaning surfaces to be painted. The compressor shall be capable of furnishing not less than 150 cfm of air at a pressure of not less than 90 psi at each nozzle used, and shall be equipped with traps that will maintain the compressed air free of oil and water.

1.5.4.2 Water Blast Equipment

The water pressure shall be specified at 2,600 psi at 140 degrees F in order to adequately clean the surfaces to be marked.

1.5.5 Marking Removal Equipment

Equipment shall be mounted on rubber tires and shall be capable of removing markings from the pavement without damaging the pavement surface or joint sealant. Waterblasting equipment shall be capable of producing an adjustable, pressurized stream of water. Sandblasting equipment shall include an air compressor, hoses, and nozzles. The compressor shall be equipped with traps to maintain the air free of oil and water.

1.5.5.1 Shotblasting Equipment

Shotblasting equipment shall be capable of producing an adjustable depth of removal of marking and pavement. Each unit shall be self-cleaning and self-contained, shall be able to confine dust and debris from the operation, and shall be capable of recycling the abrasive for reuse.

1.5.5.2 Chemical Equipment

Chemical equipment shall be capable of application and removal of chemicals from the pavement surface, and shall leave only non-toxic biodegradable residue.

1.5.6 Traffic Controls

Suitable warning signs shall be placed near the beginning of the worksite and well ahead of the worksite for alerting approaching traffic from both

directions. Small markers shall be placed along newly painted lines to control traffic and prevent damage to newly painted surfaces. Painting equipment shall be marked with large warning signs indicating slow-moving painting equipment in operation.

1.6 MAINTENANCE OF TRAFFIC

1.6.1 Roads, Streets, and Parking Areas

When traffic must be rerouted or controlled to accomplish the work, the necessary warning signs, flagpersons, and related equipment for the safe passage of vehicles shall be provided.

1.7 WEATHER LIMITATIONS FOR REMOVAL

Pavement surface shall be free of snow, ice, or slush. Surface temperature shall be at least 40 degrees F and rising at the beginning of operations, except those involving shot or sand blasting. Operation shall cease during thunderstorms. Operation shall cease during rainfall, except for waterblasting and removal of previously applied chemicals. Waterblasting shall cease where surface water accumulation alters the effectiveness of material removal.

1.8 QUALIFICATIONS

The Contractor shall submit documentation certifying that pertinent personnel are qualified for equipment operation and handling of chemicals.

PART 2 PRODUCTS

2.1 MATERIALS

Provide materials conforming to the requirements specified herein.

2.1.1 Paints for Roads and Streets

FS TT-P-1952, color as indicated.

2.1.2 Reflective Media for Roads and Streets

FS TT-B-1325, Type I, Gradation A.

PART 3 EXECUTION

3.1 SURFACE PREPARATION

Allow new pavement surfaces to cure for a period of not less than 30 days before application of marking materials. Thoroughly clean surfaces to be marked before application of the paint. Remove dust, dirt, and other granular surface deposits by sweeping, blowing with compressed air, rinsing with water, or a combination of these methods as required. Remove rubber deposits, existing paint markings, residual curing compounds, and other coatings adhering to the pavement by water blasting. For Portland Cement Concrete pavement, grinding, light shot blasting, and light scarification, to a resulting profile equal to ICRI 03732 CSP 2, CSP 3, and CSP 4, respectively, can be used in addition to water blasting, to either remove existing coatings or for surface preparation on most pavements. Scrub affected areas, where oil or grease is present on old pavements to be marked, with several applications of trisodium phosphate solution or other

approved detergent or degreaser and rinse thoroughly after each application. After cleaning oil-soaked areas, seal with shellac or primer recommended by the manufacturer to prevent bleeding through the new paint. Do not commence painting in any area until pavement surfaces are dry and clean.

3.1.1 Early Painting of Asphalt Pavements

For asphalt pavement systems requiring painting application at less than 30 days, apply the paint and beads at half the normal application rate, followed by a second application at the normal rate after 30 days.

3.2 APPLICATION

3.2.1 Testing for Moisture

Apply pavement markings to dry pavement only. The Contractor shall test the pavement surface for moisture before beginning work after each period of rainfall, fog, high humidity, or cleaning, or when the ambient temperature has fallen below the dew point. Do not commence marking until the pavement is sufficiently dry and the pavement condition has been approved by the CO or authorized representative. Employ the "plastic wrap method" to test the pavement for moisture as follows: Cover the pavement with a 12 inch by 12 inch section of clear plastic wrap and seal the edges with tape. After 15 minutes, examine the plastic wrap for any visible moisture accumulation inside the plastic. Do not begin marking operations until the test can be performed with no visible moisture accumulation inside the plastic wrap.

3.2.2 Rate of Application

3.2.2.1 Reflective Markings

Apply paint evenly to the pavement area to be coated at a rate of 105 plus or minus 5 square feet per gallon. Apply glass spheres uniformly to the wet paint street pavement at a rate of (6) plus or minus (0.5) pounds of glass spheres per gallon. Collect and record readings for white and yellow retroreflective markings at the rate of one reading per 1000 linear feet. The minimum acceptable average for white markings is 200 millicandelas per square meter per lux (mcd/m2/lx) (measured with Mirolux 12 Retroreflectometer or similar instrument as agreed). The minimum acceptable average for yellow markings is 175 millicandelas per square meter per lux (mcd/m2/lx). Readings shall be computed by averaging a minimum of 10 readings taken within the area at random locations. Areas not meeting the retroreflective requirements stated above shall be re-marked.

3.2.2.2 Nonreflective Markings

Apply paint evenly to the pavement surface to be coated at a rate of 105 plus or minus 5 square feet per gallon.

3.2.3 Painting

Apply paint pneumatically with approved equipment at rate of coverage specified herein. Provide guidelines and templates as necessary to control paint application. Take special precautions in marking numbers, letters, and symbols. Manually paint numbers, letters, and symbols. Sharply outline all edges of markings. The maximum drying time requirements of the

paint specifications will be strictly enforced, to prevent undue softening of bitumen, and pickup, displacement, or discoloration by tires of traffic. Discontinue painting operations if there is a deficiency in drying of the markings until cause of the slow drying is determined and corrected.

3.2.4 Reflective Media

Application of reflective media shall immediately follow the application of paint. Accomplish drop-on application of the glass spheres to ensure even distribution at the specified rate of coverage. Should there be malfunction of either paint applicator or reflective media dispenser, discontinue operations until deficiency is corrected.

3.3 FIELD TESTING, INSPECTION, AND DEMONSTRATIONS

3.3.1 Sampling and Testing

As soon as the paint and reflective materials are available for sampling, obtain by random selection from the sealed containers, two quart samples of each batch in the presence of the Contracting Officer. Accomplish adequate mixing prior to sampling to ensure a uniform, representative sample. A batch is defined as that quantity of material processed by the manufacturer at one time and identified by number on the label. Clearly identify samples by designated name, specification number, batch number, project contract number, intended use, and quantity involved. At the discretion of the Contracting Officer, samples provided may be tested by the Government for verification.

3.3.2 Inspection

Examine material at the job site to determine that it is the material referenced in the report of test results or certificate of compliance. A certificate of compliance shall be accompanied by test results substantiating conformance to the specified requirements.

3.3.3 Surface Preparations and Application Procedures

Surface preparations and application procedures will be examined by the Contracting Officer to determine conformance with the requirements specified. Approve each separate operation prior to initiation of subsequent operations.

3.4 TRAFFIC CONTROL AND PROTECTION

Place warning signs near the beginning of the work site and well ahead of the work site for alerting approaching traffic from both directions. Place small markers along newly painted lines to control traffic and prevent damage to newly painted surfaces. Mark painting equipment with large warning signs indicating slow-moving painting equipment in operation. Do not use foil-backed material for temporary pavement marking because of its potential to conduct electricity during accidents involving downed power lines.

3.5 QUALITY ASSURANCE

Demonstrate success of bond of reflective media, new paint marking and the pavement surface, vacuum cured surface of new marking after a seven (7) day dry time. Inspect newly applied markings for signs of bond failure based on visual inspection and comparison to results from Test Stripe

Demonstration paragraph.

3.5.1 Reflective Media and Coating Bond Verification

Within seven (7) days after pavement marking application, use industrial vacuum to sweep new markings. Visually inspect the pavement markings and the material captured by the vacuum. Verify that no significant loss of reflective media has occurred to the pavement marking due to the vacuum cleaning.

3.5.2 Reflective Media and Coating Application Verification

Use a wet film thickness gauge to measure the application of wet paint.

Use a microscope or magnifying glass to evaluate the embedment of glass beads in the paint. Verify the glass bead embedment with approximately 50 percent of the beads embedded and 50 percent of the beads exposed.

-- End of Section --

SECTION 32 92 19

SEEDING
10/06

PART 1 GENERAL

1.1 REFERENCES

The publications listed below form a part of this specification to the extent referenced. The publications are referred to within the text by the basic designation only.

ASTM INTERNATIONAL (ASTM)

ASTM C602	(2013) Agricultural Liming Materials
ASTM D4972	(2001; R 2007) pH of Soils

U.S. DEPARTMENT OF AGRICULTURE (USDA)

AMS Seed Act	(1940; R 1988; R 1998) Federal Seed Act
DOA SSIR 42	(1996) Soil Survey Investigation Report No. 42, Soil Survey Laboratory Methods Manual, Version 3.0

1.2 DEFINITIONS

1.2.1 Stand of Turf

95 percent ground cover of the established species.

1.3 RELATED REQUIREMENTS

Section 31 23 00.00 20 EXCAVATION AND FILL and Section 32 05 33 LANDSCAPE ESTABLISHMENT applies to this section for pesticide use and plant establishment requirements, with additions and modifications herein.

1.4 SUBMITTALS

Government approval is required for submittals with a "G" designation; submittals not having a "G" designation are for Contractor Quality Control approval. The following shall be submitted in accordance with Section 01 33 00 SUBMITTAL PROCEDURES:

SD-03 Product Data

Wood cellulose fiber mulch

Fertilizer

Include physical characteristics, and recommendations.

SD-06 Test Reports

Topsoil composition tests (reports and recommendations).

SD-07 Certificates

State certification and approval for seed

SD-08 Manufacturer's Instructions

Erosion Control Materials

1.5 DELIVERY, STORAGE, AND HANDLING

1.5.1 Delivery

1.5.1.1 Seed Protection

Protect from drying out and from contamination during delivery, on-site storage, and handling.

1.5.1.2 Fertilizer and Lime Delivery

Deliver to the site in original, unopened containers bearing manufacturer's chemical analysis, name, trade name, trademark, and indication of conformance to state and federal laws. Instead of containers, fertilizer and lime may be furnished in bulk with certificate indicating the above information.

1.5.2 Storage

1.5.2.1 Seed, Fertilizer and Lime Storage

Store in cool, dry locations away from contaminants.

1.5.2.2 Topsoil

Prior to stockpiling topsoil, treat growing vegetation with application of appropriate specified non-selective herbicide. Clear and grub existing vegetation three to four weeks prior to stockpiling topsoil.

1.5.2.3 Handling

Do not drop or dump materials from vehicles.

1.6 TIME RESTRICTIONS AND PLANTING CONDITIONS

1.6.1 Restrictions

Do not plant when the ground is frozen, snow covered, muddy, or when air temperature exceeds 90 degrees Fahrenheit.

1.7 TIME LIMITATIONS

1.7.1 Seed

Apply seed within twenty four hours after seed bed preparation.

PART 2 PRODUCTS

2.1 SEED

2.1.1 Classification

Provide State-certified seed of the latest season's crop delivered in original sealed packages, bearing producer's guaranteed analysis for percentages of mixtures, purity, germination, weedseed content, and inert material. Label in conformance with AMS Seed Act and applicable state seed laws. Wet, moldy, or otherwise damaged seed will be rejected. Field mixes will be acceptable when field mix is performed on site in the presence of the Contracting Officer.

2.1.2 Planting Dates

Planting Season	Planting Dates
Season 1	February 15 - May 15
Season 2	September 1 - December 1
Temporary Seeding	All times not listed above

2.1.3 Seed Purity

Common Name	Minimum Percent Pure Seed	Minimum Percent Germination and Hard Seed	Maximum Percent Weed Seed
Turf Fescue	98	90	0.5
Annual Rye Grass	98	90	0.5
Red Top	94	85	0.5

2.1.4 Seed Mixture by Weight

Planting Season	Variety	Percent (by Weight)
Season 1	Turf Fescue Annual Rye Grass	80 20
Season 2	Turf Fescue	100
Temporary Seeding	Annual Rye Grass	100

Proportion seed mixtures by weight. Temporary seeding must later be replaced by Season 2 plantings for a permanent stand of grass. The same requirements of turf establishment for Season 2 apply for temporary seeding.

2.2 TOPSOIL

2.2.1 On-Site Topsoil

Surface soil stripped and stockpiled on site and modified as necessary to meet the requirements specified for topsoil in paragraph entitled "Composition." When available topsoil shall be existing surface soil stripped and stockpiled on-site in accordance with Section 31 23 00.00 20 EXCAVATION AND FILL.

2.2.2 Off-Site Topsoil

Conform to requirements specified in paragraph entitled "Composition." Additional topsoil shall be furnished by the Contractor.

2.2.3 Composition

Containing from 5 to 10 percent organic matter as determined by the topsoil composition tests of the Organic Carbon, 6A, Chemical Analysis Method described in DOA SSIR 42. Maximum particle size, 3/4 inch, with maximum 3 percent retained on 1/4 inch screen. The pH shall be tested in accordance with ASTM D4972. Topsoil shall be free of sticks, stones, roots, and other debris and objectionable materials. Other components shall conform to the following limits:

Silt	25-50 percent
Clay	10-30 percent
Sand	20-35 percent
pH	5.5 to 7.0
Soluble Salts	600 ppm maximum

2.3 SOIL CONDITIONERS

Add conditioners to topsoil as required to bring into compliance with "composition" standard for topsoil as specified herein.

2.3.1 Lime

Commercial grade hydrate or burnt limestone containing a calcium carbonate equivalent (C.C.E.) as specified in ASTM C602 of not less than 80 percent.

2.4 FERTILIZER

2.4.1 Granular Fertilizer

Organic or synthetic, granular controlled release fertilizer containing the following minimum percentages, by weight, of plant food nutrients:

20 percent available nitrogen
5 percent available phosphorus
10 percent available potassium

2.4.2 Hydroseeding Fertilizer

Controlled release fertilizer, to use with hydroseeding and composed of pills coated with plastic resin to provide a continuous release of nutrients for at least 6 months and containing the following minimum percentages, by weight, of plant food nutrients.

20 percent available nitrogen
5 percent available phosphorus
10 percent available potassium

2.5 MULCH

Mulch shall be free from noxious weeds, mold, and other deleterious materials.

2.5.1 Straw

Stalks from oats, wheat, rye, barley, or rice. Furnish in air-dry condition and of proper consistency for placing with commercial mulch blowing equipment. Straw shall contain no fertile seed.

2.5.2 Hay

Air-dry condition and of proper consistency for placing with commercial mulch blowing equipment. Hay shall be sterile, containing no fertile seed.

2.5.3 Wood Cellulose Fiber Mulch

Use recovered materials of either paper-based (100 percent) or wood-based (100 percent) hydraulic mulch. Processed to contain no growth or germination-inhibiting factors and dyed an appropriate color to facilitate visual metering of materials application. Composition on air-dry weight basis: 9 to 15 percent moisture, pH range from 3.5 to 5.0. Use with hydraulic application of grass seed and fertilizer.

2.6 WATER

Source of water shall be approved by Contracting Officer and of suitable quality for irrigation, containing no elements toxic to plant life.

2.7 EROSION CONTROL MATERIALS

Erosion control material shall conform to the following:

2.7.1 Erosion Control Blanket

100 percent agricultural straw or 70 percent agricultural straw/30 percent coconut fiber matrix stitched with a degradable nettings, designed to degrade within 18 months.

2.7.2 Erosion Control Fabric

Fabric shall be knitted construction of polypropylene yarn with uniform mesh openings 3/4 to 1 inch square with strips of biodegradable paper. Filler paper strips shall have a minimum life of 6 months.

2.7.3 Erosion Control Material Anchors

Erosion control anchors shall be as recommended by the manufacturer.

PART 3 EXECUTION

3.1 PREPARATION

3.1.1 EXTENT OF WORK

Provide soil preparation (including soil conditioners as required), fertilizing, seeding, and surface topdressing of all newly graded finished earth surfaces, unless indicated otherwise, and at all areas inside or outside the limits of construction that are disturbed by the Contractor's operations.

3.1.1.1 Topsoil

Provide 4 inches of off-site topsoil to meet indicated finish grade. After areas have been brought to indicated finish grade, incorporate fertilizer and soil conditioners into soil a minimum depth of 4 inches by disking, harrowing, tilling or other method approved by the Contracting Officer. Remove debris and stones larger than 3/4 inch in any dimension remaining on the surface after finish grading. Correct irregularities in finish surfaces to eliminate depressions. Protect finished topsoil areas from damage by vehicular or pedestrian traffic.

3.1.1.2 Soil Conditioner Application Rates

Apply soil conditioners at rates as determined by laboratory soil analysis of the soils at the job site. For bidding purposes only apply at rates for the following:

Lime 6.964 pounds per 1,000 square feet.

3.1.1.3 Fertilizer Application Rates

Apply fertilizer at rates as determined by laboratory soil analysis of the soils at the job site. For bidding purposes only apply at rates for the following:

Organic Granular Fertilizer 1.024 pounds per 1,000 square feet.

Synthetic Fertilizer 1024 pounds per 1,000 square feet.

Hydroseeding Fertilizer 1.024 pounds per 1,000 square feet.

3.2 SEEDING

3.2.1 Seed Application Seasons and Conditions

Immediately before seeding, restore soil to proper grade. Do not seed when ground is muddy, frozen, snow covered or in an unsatisfactory condition for seeding. If special conditions exist that may warrant a variance in the above seeding dates or conditions, submit a written request to the Contracting Officer stating the special conditions and proposed variance. Apply seed within twenty four hours after seedbed preparation. Sow seed by approved sowing equipment. Sow one-half the seed in one direction, and sow remainder at right angles to the first sowing.

3.2.2 Seed Application Method

Seeding method shall be broadcasted and drop seeding or hydroseeding.

3.2.2.1 Broadcast and Drop Seeding

Seed shall be uniformly broadcast at the rate of 10.24 pounds per 1,000 square feet. Use broadcast or drop seeders. Sow one-half the seed in one direction, and sow remainder at right angles to the first sowing. Cover seed uniformly to a maximum depth of 1/4 inch in clay soils and 1/2 inch in sandy soils by means of spike-tooth harrow, cultipacker, raking or other approved devices.

3.2.2.2 Hydroseeding

First, mix water and fiber. Wood cellulose fiber, paper fiber, or recycled paper shall be applied as part of the hydroseeding operation. Fiber shall be added at 1,000 pounds, dry weight, per acre. Then add and mix seed and fertilizer to produce a homogeneous slurry. Seed shall be mixed to ensure broadcasting at the rate of 10.24 pounds per 1,000 square feet. When hydraulically sprayed on the ground, material shall form a blotter like cover impregnated uniformly with grass seed. Spread with one application with no second application of mulch.

3.2.3 Mulching

3.2.3.1 Hay or Straw Mulch

Hay or straw mulch shall be spread uniformly at the rate of 2 tons per acre. Mulch shall be spread by hand, blower-type mulch spreader, or other approved method. Mulching shall be started on the windward side of relatively flat areas or on the upper part of steep slopes, and continued uniformly until the area is covered. The mulch shall not be bunched or clumped. Sunlight shall not be completely excluded from penetrating to the ground surface. All areas installed with seed shall be mulched on the same day as the seeding. Mulch shall be anchored immediately following spreading.

3.2.4 Rolling

Immediately after seeding, firm entire area except for slopes in excess of 3 to 1 with a roller not exceeding 90 pounds for each foot of roller width. If seeding is performed with cultipacker-type seeder or by hydroseeding, rolling may be eliminated.

3.2.5 Erosion Control Material

Install in accordance with manufacturer's instructions, where indicated or as directed by the Contracting Officer.

3.2.6 Watering

Start watering areas seeded as required by temperature and wind conditions. Apply water at a rate sufficient to insure thorough wetting of soil to a depth of 2 inches without run off. During the germination process, seed is to be kept actively growing and not allowed to dry out.

3.3 PROTECTION OF TURF AREAS

Immediately after turfing, protect area against traffic and other use.

3.4 RESTORATION

Restore to original condition existing turf areas which have been damaged during turf installation operations at the Contractor's expense. Keep clean at all times at least one paved pedestrian access route and one paved vehicular access route to each building. Clean other paving when work in adjacent areas is complete.

-- End of Section --

SECTION 33 08 55

COMMISSIONING OF FUEL FACILITY SYSTEMS
07/07

PART 1 GENERAL

1.1 SUMMARY/APPLICABILITY

This specification defines the requirements and procedures for startup and commissioning of fuel facility systems. It covers requirements for safety, Government scheduling and coordination, device testing, system flushing and cleaning, demonstration of indicated and specified system performance and final acceptance and reporting.

1.2 SUBMITTALS

Government approval is required for submittals with a "G" designation; submittals not having a "G" designation are for Contractor Quality Control approval. The following shall be submitted in accordance with Section 01 33 00 SUBMITTAL PROCEDURES:

SD-01 Preconstruction Submittals

Commissioning Plan; G

SD-06 Test Reports

Piping Flushing Checklist; G
Control Valve Checklist; G
Commissioning Report; G

SD-07 Certificates

Certification of Completion
Disposal of Waste Materials

1.3 SAFETY

Prior to any on-site commissioning activities, the following safety procedures shall be accomplished in all fueling areas to be commissioned under this specification section: placement of Contractor-provided portable eyewash units within 100 feet or 10 seconds from the fueling point, verification of proper grounding throughout system, coordination with Government Fire and Safety Office and Fuels personnel, placement of Contractor-provided spill pads and containment booms, placement of Contractor-provided fire extinguishers capable of extinguishing a fuel fire. Ensure that all radios/devices at all Class I, Division 1 areas are intrinsically safe.

1.4 COMMISSIONING PLAN

The Contractor shall submit a detailed written plan for implementation of system commissioning. The commissioning plan shall specify a detailed plan incorporating in a sequenced manner all work specified in PART 3 EXECUTION of this specification section. The plan shall be submitted for Government approval 90 calendar days prior to commencement of fuel system commissioning. The plan shall include:

a. Personnel. List of Contractor's personnel by trade, list of key personnel, list of safety equipment, list of miscellaneous equipment such as two-way radios, and personnel transportation vehicles.

b. Performance Testing. Detailed equipment startup procedures and schedules to perform all system tests under each operating scenario in accordance with paragraph entitled "Performance Tests".

c. Test forms. Develop all test forms required for documenting the fuel system commissioning work. The format of the test forms shall follow the sequencing and terminology of the commissioning plan and shall furnish data grids and ample areas for test data recording.

d. Schedule. Schedules shall generate and list dates and durations of all commissioning activities as well as regular coordination and safety meetings and dates of key events for Government participation.

e. Fuel. Quantities of fuel needed for all commissioning activities and fuel delivery schedules. Plan shall include requirements and schedules for Government-provided materials and equipment.

f. Contingency plans. Information on spill and fire contingencies, along with the required Government Fire and Safety Office involvement and approvals.

g. Coordination with Base. Description of how Contractor shall implement system start-up in coordination with ongoing base operations. Plan shall incorporate all phasing and work restriction requirements of the Contract Documents.

1.5 CERTIFICATION OF COMPLETION

As a prerequisite to fuel system commissioning, the Contractor shall submit a Certificate of Completion that certifies all work provided on the fuel system, except for field painting, has been inspected and approved by the specified approving authorities. Further, the Contractor shall certify on this certificate that all specified checks and inspections have been successfully completed prior to commissioning. The Contractor shall give the Contracting Officer at least 45 calendar days notice prior to commencement of fuel system commissioning. The Contractor shall submit the Certificate of Completion to the Contracting Officer at least 7 calendar days prior to commencement of system commissioning. The Contracting Officer shall then be responsible for scheduling the Government representatives and appropriate military command authority and designers for participation in the inspection, performance testing, and final approval activities. Any contractual deficiencies observed shall be corrected by the Contractor without cost to the Government.

1.6 COMMISSIONING REPORT

Contractor shall prepare a commissioning report that documents the execution of the approved commissioning plan. All items of work specified in the commissioning plan shall be carried out and reported in this report unless otherwise approved by the Contracting Officer. Include as a part of this report verification letters of approved fuel storage tank hydrostatic tests (if performed) and the piping hydrostatic tests, as generated under other specification sections. The commissioning report shall include the

final settings of the control valves and pressure and flow switches with an explanation of what each graph indicates and what the system is doing.

1.7 DISPOSAL OF WASTE MATERIALS

The Contractor shall be responsible for properly disposing of any sludge, debris, and waste fuel resulting from piping and tank cleaning and flushing activities. Comply with all applicable local, State, and Federal Regulations for hazardous waste disposal.

PART 2 PRODUCTS

2.1 DESIGN CONDITIONS

Temporary flushing lines and equipment shall be equal in strength, stability, and materials to the associated permanent components and compatible with the fluid service intended; however, temporary spools may be carbon steel.

2.2 CONTRACTOR PROVIDED MATERIALS AND EQUIPMENT

The Contractor shall provide all material, equipment and labor required for proper start-up of the system(s), except for that specified to be Government furnished. Equipment shall include but not be limited to the following:

a. Temporary strainers.

b. Temporary piping, pipe spools and blind flanges.

c. Test instruments such as flow meters, gauges, calibration devices, and sampling equipment.

d. Test equipment such as pumps, hoses and tanks.

e. Electronic sensors for pressure and flow measurements. This equipment shall be used to monitor and record the system during the "Equipment Test" and "Performance Testing" portions of this Specification Section. Recorded data shall be used by the Contractor and equipment factory representatives to achieve final control valve and equipment adjustments. Recorded data shall include:

   1. Pier loading and unloading flow rates and pressures.

   2. Truck loading flow rates and pressures.

   3. Pipeline Receipt flow rates and pressure.

2.2.1 Tank Trucks

Transport tank trucks and operators will be furnished by the Contractor.

2.3 GOVERNMENT FURNISHED MATERIALS AND EQUIPMENT

The Government will furnish the following materials, equipment and services used during the execution of the commissioning plan. Any damage caused by the Contractor's operations shall be repaired at no additional cost to the Government.

2.3.1 Fuel

The Government will provide the fuel necessary for system testing. The Contractor shall notify the Contracting Officer a minimum of sixty (60) days in advance of the requirements. Additional fuel will be provided by the Government as required for satisfactory flushing of the system. Upon satisfactory completion of the flushing and cleaning operations, the Government will supply the additional quantities of fuel required to complete the other work under this specification section.

Fuel will not be delivered to the system until the Contractor has satisfactorily completed all work and, in particular, the cleaning and coating of the interior surfaces of the storage tanks and the removal of preservatives and foreign matter from those portions coming in contact with the fuel valves, pumps, and other such equipment. Fuel delivered to the system shall remain the property of the Government and the Contractor shall reimburse the Government for shortages not attributable to normal handling losses. The Government shall be reimbursed for fuel lost as a result of defective materials or workmanship.

2.3.2 Utilities

Electric power required for the performance of the work under this specification section will be furnished at no charge to the Contractor.

2.3.3 Fueling Barge

Fueling barge and operator shall be furnished by the Government.

2.3.4 Fuel Testing Laboratory

During all phases of commissioning and system cleaning of the facilities, the Government will provide services of their fuel testing laboratory and technician to monitor the quality of the jet fuel.

PART 3 EXECUTION

3.1 PRELIMINARY REQUIREMENTS

All activities listed in paragraph "PART 3 EXECUTION" shall be performed sequentially in the order they are presented. Prior to any on-site commissioning activities, the Contractor shall ensure that all requirements of the paragraph entitled "Safety" are satisfied. Project shall be substantially complete and Contractor's work area shall be free of debris, trash and obstacles. Perform the following activities prior to receipt of fuel.

3.1.1 Electrical Preparations

Prior to energizing the electrical equipment, verify that short-circuit links have been removed from current transformer and that secondary circuits have been connected. Confirm that all tests required for fire detection and suppression systems have been performed and accepted. Verify all electrical transmitter connections and ensure proper calibration. Verify all electrical equipment meets Class I Division 1 requirements where required. Verify correct rotation of all motors prior to testing. Verify paddle type flow switches by physically actuating vanes and checking outputs. Conduit explosion-proof sealoffs shall be poured after initial electrical checks but before fuel receipt.

3.1.2 Emergency Fuel Shutoff (EFSO) System Testing

Prior to initial fuel receipt, verify that each switch will trip the circuit breaker of the fuel pumps and de-energize the EFSO relay.

3.1.3 Storage Tanks

Ensure approved performance of storage tank integrity testing, hydrostatic tests (if performed) and coating application/inspection per the applicable specifications. Include verification letter of approved test results for information in commissioning report. Ensure that tank interior is clean and free of any fuel-contaminating debris. Verify operation of tank level alarms by closing tank connection valves and filling housings with fuel to confirm action. Ensure that certified strapping charts for all tanks are available for start-up personnel. Verify correct orientation of internal tank inlet diffuser.

3.1.4 Piping System

Ensure that all piping weld integrity and coating inspections have been performed per the applicable specifications. Include verification of approved test results for information in the commissioning report. Evacuate all accumulated water from piping low point drains, valve cavities, and equipment drains. Verify all bolted connections are tightness tested to required torque using a calibrated torque wrench. Verify that all pressure gauges are properly located and installed. Ensure that piping's cathodic protection system is tested and operational. Ensure that pipe marking and identification is provided as specified. Ensure that piping system thermal relief provisions are installed and operating as designed. Verify the correct installation of piping expansion loops, joints, and supports.

3.1.4.1 Pier Piping Systems

For pier delivery/receipt systems or other over-water piping installations, ensure compliance with the Contractor's previously approved spill control plans.

3.2 PREPARATIONS FOR FLUSHING

Upon completion of the construction to the satisfaction of the Contracting Officer, the Contractor shall make the following preparations for system flushing.

3.2.1 Protection Of Equipment

The following components shall be removed from the system prior to start of flushing operations and, where applicable, replaced with pipe spools of internal diameter equal to the item removed.

a. Control valves. The Contractor shall be responsible for any damage to valves left in place.

b. Flow and pressure sensors which are exposed to the system flush.

c. Fuel meters.

After flushing, the above items shall be reinstalled in the system and the

spool sections turned over to the Contracting Officer.

3.2.2 Strainers

Temporary 40 mesh cone type strainers shall be installed in the suction line ahead of each fueling pump for the entire flushing operation. Any damaged strainers shall be replaced by the Contractor at no additional cost to the Government.

3.3 INITIAL FUEL RECEIPT

3.3.1 General

Utilize one storage tank for initial fuel receipt to isolate possibly contaminated fuel. Initial receipt of fuel shall be done by gravity if possible. The Contractor shall station personnel throughout piping system at high point vents to bleed air. All flanges and equipment will be periodically inspected for leaks during filling procedures.

3.3.2 Storage Tanks

Receipt flow rate into an empty storage tank shall not exceed 3 feet per second (FPS), as measured in the main receipt piping, until outlet of tank fill nozzle is submerged and pan/roof legs are lifted.

3.3.3 Components

Ensure vessels are filled slowly by closing outlet valves and venting through air eliminators. Downstream valves shall be throttled to maintain a packed condition in vessels throughout initial fill of piping system. Differential pressure across strainers shall be continuously monitored. Any time a strainer DP reaches 20 psig, it shall be cleaned.

3.3.4 Fuel Quality

Fuel used during initial receipt shall be considered contaminated and shall be positively isolated, with blind flanges or closed, padlocked manual valves, from any truck fueling operations. Fuel isolation shall continue until all flushing and cleaning is completed.

3.3.5 F-24 Fuel Receipt

3.3.5.1 F-24 Fuel Receipt by Pipeline

Start-up personnel shall meet with Government personnel in charge of existing fuel storage to discuss fuel transfer procedures. Topics shall include: methods of communication to start/stop remote pipeline transfer pumps; flow rate and head characteristics of transfer pumps; methods of restricting initial receipt flow rate; methods of straining initial receipt fuel; accommodating multiple pump starts resulting from required strainer cleaning operations; required quantity of fuel to be transferred. Contractor shall provide a written summary of pipeline receipt procedures to the Contracting Officer.

3.3.5.2 Initial Receipt of F-24 Jet Fuel

After completing the removal of equipment as identified in the preceding paragraphs and the installation of all temporary strainers identified in the preceding paragraphs, align the block valves to receive fuel from the

fuel supply pipeline into fuel storage tank 501 (T-501). When receiving the initial fuel, ensure that air is completely vented from the fuel piping as the fuel enters the piping. During fuel receipts, periodically operate the low point drains to remove water and debris and operate high point vents to remove trapped air. When the Contractor has determined that 50,000 BBL minimum have been received into T-501, inspect and clean all the strainers in the flow path from the pipeline to T-501 in the presence of the Contracting Officer.

During the initial fuel transfer operation, monitor the pressures in the lines. A minimum of 2600 gpm fuel transfer rate must be maintained to properly flush the fuel supply pipeline. The presence of debris in any strainer will indicate that the fuel supply pipeline has not been adequately cleaned by the Contractor.

If construction debris is detected in any strainers in the flow path, clean the strainer and continue flowing into T-501 until no debris is detected in the strainers, as witnessed by the Contracting Officer.

3.3.6 Storage Tank and Piping Hydrostatic Tests with Fuel

All remaining fuel system piping shall be packed with fuel, following procedures outlined in paragraph "General" above. F-76 fuel lines shall be filled from either storage tank T-503 or T-504. JP-5 fuel lines shall be filled from Government designated 400 series JP-5 bulk storage tanks. Perform piping hydrostatic tests with fuel per the applicable specifications, ensuring the piping system is completely vented of air through the piping high point vent system. Contractor shall submit a tank and piping testing checklist to ensure the requirements of this and other applicable specifications are met.

3.4 FLUSHING

The intent of the flushing operation is to remove bulk solids and water from the system. All new and modified fuel piping, including the tie-in transfer line, F-24 receipt system piping, pier issue and receipt piping, and truck fillstand piping shall be flushed with fuel.

3.4.1 Flushing Requirements

Align valves for F-24 fuel flow from tank T-501 through the fuel transfer pumps (FTP-5A and FTP-5B) to the Pier D south equipment pad and then back to tank T-502. Close normally open double block and bleed valve at Pier D equipment pad to accomplish this task. Flowrate shall be at minimum of 4200 gpm using only FTP-4A or FTP-4B and pump fuel from T-501 to T-502 until T-501 reaches its 5 percent low level. Continue to operate all low point drains to remove debris and water that has collected and continue to operate high point vents to remove pockets of air that collect during the flushing. At the half way point and at the end of this flush, check all strainers in the flow path for debris; debris on the strainers shall indicate that the fuel supply line has not been adequately cleaned by the Contractor.

Repeat flush by aligning valves for fuel flow from T-502 through FTP-4A and FTP-4B to Pier D south equipment pad and then back to T-501 using same direction of flow through piping. Continue flush until T-502 reaches its 5 percent low level. Operate all low point drains to remove debris and water that has collected and continue to operate high point vents to remove pockets of air that collect during the flushing. At the half way point and

at the end of this flush, check all strainers in the flow path for debris; the presence of any debris on the strainers shall indicate that the fuel supply line has not been adequately cleaned by the Contractor.

During the course of the flushing described above, the Contractor shall flush all jumper lines for a minimum of 30 minutes each at their maximum flowrate.

Completely drain T-502 down to its center sump by pumping the fuel into T-501 by using the low suction pump(FTP-4C). Visually inspect the interior of T-502. If there is any sign of debris in the tank, the Contractor shall clean the tank to the satisfaction of the Contracting Officer. Once the tanks have been accepted, allow T-501 to stand undisturbed at least 96 hours to allow water and debris to accumulate in the sump. Remove water and sediment from T-501's sump and turn over to the Contracting Officer for recycling. Completely drain T-501 down to its center sump by pumping the fuel into T-502 by using FTP-4C. Visually inspect the interior of T-501. If there is any sign of debris in the tank, the Contractor shall clean T-501 to the satisfaction of the Contracting Officer.

Truck fillstand piping shall be flushed by loading a minimum one tanker truck, 8000 gallons. Samples shall be taken during truck fill operation and tested by Government personnel. A minimum of two clear sample tests required for acceptance.

After main piping system has been flushed to the satisfaction of the Contracting Officer, the Contractor shall flush all high point vents and low point drains for a minimum of 10 seconds. On completion of flushing, also drain, open, and inspect the strainers. Remove any construction debris and weld slag observed and thoroughly clean the internals of the equipment. When the Contracting Officer is satisfied with the results of the flushing, reinstall all control valves and equipment removed for flushing. Turn the pipe spools over to the Contracting Officer, remove all temporary strainers, and clean all permanent strainers.

3.4.2 F-24 Pier Piping

Newly installed F-24 Pier piping and loading arms should be hydrostatically tested with fresh water per the applicable specification. After testing, flush piping with fresh water at 12 FPS for 30 minutes. The Contractor will be allowed to use Government-furnished hoses. Drain all water from piping system and refill with product. Perform flushing with product at 12 FPS for 30 minutes. The Contractor shall be allowed to use Government barges/equipment to facilitate system flushing.

3.4.3 Piping Flushing Checklist

The Contractor shall generate a comprehensive matrix of all new and existing piping sections in the system affected by this contracts work. Matrix shall serve as an Owner's piping inventory and a checklist for all Contractor-provided flushing operations. Column entries shall include pipe section name, location, diameter, approximate length, flushing fuel velocity and volume achieved and acceptable results of sampling.

3.5 CONTROL VALVE ADJUSTMENT

All control valve settings shall be checked and field adjusted from the factory settings at start-up as necessary to provide a smooth operation. Adjustments to valves shall be made only by the Valve Manufacturer's

authorized Field Test Engineer.

3.5.1 Control Valve Checklist

The Contractor shall generate a comprehensive matrix of all control valves in the system. Matrix shall serve as a checklist of all required control valve features, settings, and functions as specified. Column entries shall include control valve name, valve tag, pilot features, solenoid control features (if applicable), factory settings, and field adjusted settings. Submit matrix with commissioning "Final Reports".

3.6 VALVE AND EQUIPMENT TAGS

During final phases of construction, and prior to start-up and commissioning effort, FLC Craney personnel will generate unique equipment and valve numbering sequence for items installed under this contract which follows the facility's existing AFHE identification protocol. Contractor shall furnish and install identification tags for the equipment and valves with the numbering sequence provided by Craney. Refer to specification Section 33 52 43 FUEL DISTRIBUTION for tag size and material requirements.

3.7 EQUIPMENT TESTS

After completion of flushing and control valve and electrical component adjustments, the equipment tests and performance tests specified hereinafter shall be performed. Both the mechanical and electrical components shall be adjusted concurrently. Tests will be witnessed by the Contracting Officer and other Government representatives.

3.7.1 Emergency Fuel Shutoff System

With one truck fillstand issue pump operating, test each "Emergency Stop" pushbutton station to verify that the pump stops and valve closes. Repeat this procedure for each fueling pump and "Emergency Stop" pushbutton station. Conduct tests for both the automatic and manual modes.

3.7.2 F-24 Tank Level Controls

Position valves to transfer fuel between tanks. Start one fuel transfer pump, and pump sufficient fuel out of the first operating tank to allow the low liquid level alarm and pump control switch to stop the pump. Continue to pump to receiving tank to allow the high level alarm and high-high level alarm to stop the pumps and perform their other functions as specified. Functionally test, with fuel, all liquid level alarms (including those associated with the level switches and those associated with the tank gauging system) to ensure they actuate properly. Repeat this procedure for each of the pumps and each tank until all controls and alarms perform at the designated set points as specified.

3.7.3 Annunciation

Verify and record that alarms function as intended by design.

3.7.4 Tank Gauging

Verify the automatic tank gauging system with manual gauging of each tank.

3.7.5 Fuel Receipt

3.7.5.1 F-24 Pipeline Receipt

Demonstrate the following features for F-24 Pipeline receipt:

a. Local actuation of motor operated valves required for Pipeline receipt.

b. Pressure indicating transmitter performance and verification of proper calibration.

c. Pipeline turbine meter performance and verification of proper calibration and temperature compensation.

d. Flash point monitor and verification of local initiation of test and calibration of instrument.

e. Additive injection system and verification of proper injector calibration for receipt of F-24 jet fuel.

3.7.5.2 Pier Receipt Systems

Demonstrate the following features for receipt from each pier through the main receipt piping system.

a. Local actuation of motor operated valves for receipt from each pier.

b. Pressure indicating transmitter performance and verification of proper calibration.

c. Pier receipt turbine meter performance and calibration, verification of temperature compensation.

d. Marine loading arm function and operating range at each pier.

3.7.6 JP-5 Day Tank Systems

Demonstrate the following features for the storage tank systems:

a. Local actuation of motor operated valves for tank selection (issue and receipt).

b. Level alarm actuation.

c. Fillstand pump shutdown at low-low level.

d. Tank receipt isolation valve closure on high-high level.

e. High Level Shut-Off Valve's solenoid control, surge control, flow control, and shut-off on high-high level.

f. Automatic tank gauging system.

g. Mechanical tank level gauge.

h. Water draw-off system.

Provide certified strapping charts to the Contracting Officer prior to performance testing. Demonstrate all other tank features and functions are

per the applicable specifications.

3.7.7 Fuel Issue Systems

3.7.7.1 Bulk Fuel Transfer Pump Control Systems

Demonstrate the following features for the Fuel Transfer Pump systems. All bulk fuel transfer pump controls were provided and commissioned by a previous MILCON project. Demonstration of operation is required only to verify proper operation has not been disturbed or affected by this projects work. Contracting Officer shall be notified if operational issues are found with existing controls.

a. Local operation of Hand/Auto switch.

b. Pump shutdown and alarm upon low flow signal from flow switch or low absolute pressure signal from pressure switch.

c. Level alarm actuation.

d. Pump shutdown on tank low-low level alarm.

e. Pump shutdown from EFSO switch.

3.7.7.2 Pier Loading

Demonstrate the following features for issuing to each pier through the main issue piping system separately:

a. Local actuation of motor operated valves required for issuing to each pier.

b. Pressure indicating transmitter performance and verification of proper calibration.

c. Automatic flow and pressure control for issues by transfer pumps for flows 4200 gpm and less.

3.7.7.3 Truck Fillstands

Demonstrate the following features for loading tanker trucks at each truck loading stands:

a. Local actuation of motor operated valves required for truck loading.

b. Manual start/stop pushbutton control.

c. Static and continuity ground verification (with actual ground/continuity readings) and overfill prevention system.

d. Control valve deadman control, surge shutdown, and pressure control features.

e. Loading meter performance, preset controls, and verification of proper calibration.

f. Pressure indicating transmitter performance and verification of proper calibration.

g. Truck Loading Valve solenoid open/close control, flow control, and pressure reducing feature.

h. Truck Loading Valve solenoid interconnections with meter preset and deadman switch for manual and automatic open/close control.

3.7.8 Additive Systems

3.7.8.1 Truck Unloading

Demonstrate the following features for unloading CI/LI additive from tanker trucks at the truck unloading stand:

a. Manual start/stop pushbutton control.

b. Pump shutdown on simulated high motor temperature condition from motor temperature switch and tank high-high level switch.

3.7.8.2 Additive System Storage Tank Systems

Demonstrate the following features for the F-24 Breakout tank, CI/LI additive tank and SDA storage tank systems:

a. Level alarm actuation.

b. Pump shutdown at low level.

c. High Level shut-off valve's solenoid control, flow control, and shut-off on high-high level.

d. Automatic tank gauging system.

e. Mechanical tank level gauge.

Provide certified strapping charts to the Contracting Officer prior to performance testing. Demonstrate all other tank features and functions are per the applicable specifications.

3.7.8.3 F-24 Transfer Pump Control

a. Local start/stop control.

b. Pump shutdown on low level condition in F-24 breakout tank.

c. Transfer meter performance, preset controls, and verification of proper calibration.

d. Pump shutdown on simulated high motor temperature condition from motor temperature switch.

e. Pump shutdown on a no-pulse signal from the meter.

f. Pump shutdown on activation of local or remote EFSO switch.

3.8 PERFORMANCE TESTS

During performance testing, the Contractor shall demonstrate that all portions of the fuel system are operating as designed and specified. Tests shall be performed under all operating scenarios. Additional tests may be

required by the Contracting Officer and Command Fuels Engineer to fully demonstrate system performance. These tests shall be accomplished by the Contractor at no additional cost to the Government. The Contractor shall notify the Contracting Officer 15 calendar days in advance of the test to permit arrangement for the use of Government furnished items. Record required data necessary to prepare reports specified in paragraph entitled "Commissioning Report".

3.8.1 Satisfactory Performance

In the event a portion of the system or any piece of equipment fails to meet the test, the Contractor shall make the necessary repairs or adjustments and repeat the Performance Test until satisfactory performance is obtained. Measured flow rates should be within 5 percent of design. Tank level gauging and alarm measurements should be within 1/16 inches of design. Any component found not to be working as specified shall be repaired/replaced by the Contractor at no additional cost to the Government. The determination of satisfactory performance shall be made by the Contracting Officer and the Military Command Authority and Government representatives. The system shall be filled with fuel and shall be operable and leak-free prior to acceptance. The Contractor shall be responsible for any leaks in the new or modified portions of the system. Anything wet with fuel is considered to be leaking.

3.9 TRAINING / INSTRUCTION FOR GOVERNMENT PERSONNEL

The contracting authority should provide one or two key personnel from their "operations" and "maintenance" departments to participate in all phases of system commissioning. The Contractor will be responsible for coordinating the involvement and training of these individuals during the startup process, including hands-on familiarization and adjustment of devices, valves, and components.

In addition, the Contractor shall conduct two 8-hour formal training sessions at the conclusion of system performance testing. These sessions shall include initial classroom system presentations as well as a complete system walk-through. The function, operation and maintenance procedures for all system devices and components will be explained. Training shall be videotaped and submitted in CD ROM or DVD format.

3.10 PROJECT CLOSEOUT

Ensure that As-Built drawings, equipment warranty documentation, and other project closeout activities are completed per the requirements of the applicable specifications.

-- End of Section --

SECTION 33 09 53.10

CONTROL AND TANK LEVEL PANELS
02/10

PART 1 GENERAL

1.1 REFERENCES

The publications listed below form a part of this specification to the extent referenced. The publications are referred to in the text by basic designation only.

INSTITUTE OF ELECTRICAL AND ELECTRONICS ENGINEERS (IEEE)

IEEE C37.90	(2005) Standard for Relays and Relay Systems Associated With Electric Power Apparatus
IEEE C62.41	(1991; R 1995) Recommended Practice on Surge Voltages in Low-Voltage AC Power Circuits

NATIONAL ELECTRICAL MANUFACTURERS ASSOCIATION (NEMA)

NEMA 250	(2008) Enclosures for Electrical Equipment (1000 Volts Maximum)
NEMA ICS 1	(2000; R 2008; E 2010) Standard for Industrial Control and Systems: General Requirements
NEMA ICS 2	(2000; R 2005; Errata 2008) Standard for Controllers, Contactors, and Overload Relays Rated 600 V
NEMA ICS 4	(2010) Terminal Blocks
NEMA ICS 6	(1993; R 2011) Enclosures

NATIONAL FIRE PROTECTION ASSOCIATION (NFPA)

NFPA 70	(2014; AMD 1 2013; Errata 1 2013; AMD 2 2013; Errata 2 2013; AMD 3 2014; Errata 3 2014) National Electrical Code

UNDERWRITERS LABORATORIES (UL)

UL 1012	(2010; Reprint May 2014) Power Units Other than Class 2
UL 1449	(2006; Reprint Sep 2013) Surge Protective Devices
UL 508	(1999; Reprint Oct 2013) Industrial Control Equipment

1.2 ADMINISTRATIVE REQUIREMENTS

a. Section 26 20 00 INTERIOR DISTRIBUTION SYSTEM applies to this section.

b. The control system supplier shall be responsible for providing a fully functional control system, in accordance with the drawings and specifications, including the field devices. Installation shall be in accordance with NFPA 70.

c. Submit six copies of Operation and Maintenance Manuals, within 7 calendar days following the completion of work. Installation, Operation, and Maintenance manuals for all equipment supplied shall be furnished following completion of work and shall include:

   1. Copy of all internal and external wiring and connection diagrams for the Control Panel, Day Tank Level Panel, and Additive Tank Level Panel.

   2. Bill of materials indicating the equipment installed.

   3. Complete troubleshooting guide, which lists possible operational problems and corrective action to be taken, including all as-built conditions.

d. Submit documents demonstrating the accuracy and completeness of the list of material and components, that items proposed comply fully with contract requirements, and are otherwise suitable for the application indicated. Documents shall consist of all data or drawings published by the manufacturer of individual items listed including manufacturer's descriptive and technical literature, performance data, catalog cuts, and installation instructions. Submit additional material if the listed items are not adequate to identify intent or conformance to technical requirements. Provide typed and electronic copies of these lists for approval. Any delays associated with resubmittals of incomplete or ambiguous initial submittals will be the Contractor's responsibility.

e. Documents shall be bound in a suitable binder adequately marked or identified on the spine and front cover. A table of contents page shall be included and marked with pertinent contract information and contents of the manual. Tabs shall be provided to separate different types of documents, such as catalog ordering information, drawings, instructions, and spare parts data. Index sheets shall be provided for each section of the manual when warranted by the quantity of documents included under separate tabs or dividers.

1.3 SUBMITTALS

Government approval is required for submittals with a "G" designation; submittals not having a "G" designation are for information only. When used, a designation following the "G" designation identifies the office that will review the submittal for the Government. Submit the following in accordance with Section 01 33 00 SUBMITTAL PROCEDURES:

SD-02 Shop Drawings

Shop Drawing; G

SD-03 Product Data

Control Panel and Components; G

Day Tank Panel and Components; G

Additive Tank Level Panel and Components; G

SD-07 Certificates

Experience and Qualifications; G

SD-10 Operation and Maintenance Data

Operation and Maintenance Manuals; G

1.4 TOOLS AND SPARE PARTS

Provide the following:

a. Any special tools necessary for operation and maintenance of the equipment providing supplier name, current cost, catalog order number, and a recommended list of spare parts to be stocked.

b. One spare set of fuses of each type and size

c. Recommended manufacturer list of spare parts, including part number, current unit price, and source of supply.

d. One spare power supply module

e. Minimum of 10 spare lamps for the Day Tank and Level Tank Panels

1.5 EXPERIENCE AND QUALIFICATIONS

Submit the following data for approval:

a. Certification stating the manufacturer or supplier of the panels has manufacturer, installed, and commissioned similar types of panels for at least five different fueling systems.

b. Certification that the control systems have successfully operated over the last 2 years and are currently in service.

c. Project names, locations, and system description of these installations. Include user point-of-contact and current telephone numbers.

1.6 WARRANTY

The Control Panel, Day Tank Level Panel, and Additive Tank Level Panel and all associated devices and hardware shall be warranted for a period of one year from the date of acceptance of the system by the Government. This warranty service shall include parts and labor service for equipment supplied under this specification. Upon notification by the Government of system or component failure, respond at the site with necessary parts within 48 hours of notification.

PART 2 PRODUCTS

2.1 MATERIALS AND EQUIPMENT

2.1.1 Control Panel and Level Panels

NEMA ICS 1, NEMA ICS 6, NEMA 250, and UL 508. The Control Panel enclosure shall be a NEMA Type 12, smooth, gasketed, continuously hinged and lockable enclosure constructed of 14 gauge steel. Both Level Panel enclosures shall be NEMA Type 4X, smooth, gasketed, continuously hinged and lockable enclosure constructed of 14 gauge steel. All seams shall be continuously welded. The Control Panel dimensions shall be a maximum of 36 inches high, maximum 24 inches wide, and a maximum of 12 inches deep. Both Level Panels shall be a maximum of 42 inches high, maximum 24 inches wide, and a maximum of 12 inches deep. The interior surfaces of all panels shall be properly cleaned, primed, and spray painted with white high-gloss enamel. Exterior surfaces shall have standard factory finish. All components within the Control Panel and Level Panels shall be installed such that servicing of one component shall not require removal or disconnection of other components. Terminal facilities shall be arranged for entrance of external conductors from the top or bottom of the enclosure.

2.1.2 Ground Bar

Each panel shall have a tin plated copper equipment ground bar. The bar shall have a minimum of five grounding screws.

2.1.3 Standard Indicator Lights

NEMA ICS 1, NEMA ICS 2, and UL 508. Lights shall be heavy duty, NEMA 4X for Level Panels and NEMA 13 for Control Panel, 1 inch mounting hole, round indicating lights operating at 120 volts ac/dc or 24 volts ac/dc. Long life bulbs shall be used. Indicator lights shall have a legend plate with words as shown on drawings. Lens color as indicated on the drawings. Lights shall be "push to test (lamp)" type. LED type lamps of comparable size and color may be substituted for standard indicator lights.

2.1.4 Pushbuttons

NEMA ICS 1, NEMA ICS 2, and UL 508. Non-illuminated pushbuttons shall be heavy duty, NEMA 4X for Level Panels and NEMA 13 for Control Panel, round, utilize a 7/8 inch mounting hole, and have the number and type of contacts as indicated on the drawings or elsewhere in the specifications. Pushbuttons shall be rated 600 volt, 10 amperes continuous. Legend plates shall be provided with each switch with words as indicated on the drawings.

2.1.5 Relays

IEEE C37.90, NEMA ICS 2, UL 508.

2.1.6 Nameplates

Nameplates shall be made of laminated plastic with black outer layers and a white core. Edges shall be chamfered. Nameplates shall be fastened with black-finished round-head drive screws or approved nonadhesive metal fasteners.

2.1.7 Transient Voltage Surge Suppression Devices

IEEE C62.41 for Category "B" transients, UL 1449.

2.1.8 Terminal Blocks

NEMA ICS 4. Terminal blocks for conductors exiting all control panels shall be two-way type with double terminals, one for internal wiring connections and the other for external wiring connections. Terminal blocks shall be made of bakelite or other suitable insulating material with full deep barriers between each pair of terminals. A terminal identification strip shall form part of the terminal block and each terminal shall be identified by a number in accordance with the numbering scheme on the approved wiring diagrams.

2.1.9 Circuit Breakers

UL 508. Individual, appropriately sized, terminal block mounted, circuit breakers shall be provided for all 120 volt PCP mounted equipment and for the 120 volt terminal boards shown on the drawings.

2.1.10 Miscellaneous Power Supplies

UL 1012. Certain field devices may require power other than 120 VAC (i.e. 24 VDC). The power supplies shall be convection cooled, have fully isolated independent outputs, have constant voltage, have short circuit and overvoltage protection, and have automatic current limiting. Refer to drawings for power supplies required.

2.1.11 Alarm Horns

UL 508. The alarm horns shall consist of resonating horns. The horn associated with the Control Panel shall be a resonating horn mounted on the outside of the Operator's Enclosure as shown on the drawings. The horns associated with the Day Tank and Additive Tank Level Panels shall be resonating horns mounted on the face their respective panels as shown on the drawings. The exterior horns shall each produce 100 db at 10 feet and shall be provided in a weather proof housing.

PART 3 EXECUTION

3.1 CONTROL PANEL, LEVEL PANELS, AND COMPONENTS

3.1.1 General

Where two or more pieces of equipment performing the same function are required, they shall be exact duplicates produced by the same manufacturer. All display instruments of each type shall represent the same outward appearance, having the same physical size and shape, and the same size and style of numbers, characters, pointers, and lamp lenses.

3.1.2 Wiring

Wiring methods and practices shall be in conformance with NEMA ICS 1, NEMA ICS 2, NEMA ICS 4, and NEMA ICS 6 recommendations as applicable. All wiring to instruments and control devices shall be made with stranded wire, and wiring shall be permanently labeled with conductor/wire numbers within 1 inch of termination points. Labels shall be tubular heat-shrinkable wire markers that remain legible after exposure to industrial fluids and

abrasion. Position markers so that wire numbers can be read without disturbing or disconnecting wiring. Use of individual character-markers placed side-by-side is not acceptable. Numbers shall match approved shop drawings. All wiring shall be neatly laced from point of entry into enclosures to termination points with nylon lacing cord or plastic lacing ties. Lacing within wiring channels is not required. Provide typed Control Wiring Data Lists within each terminal cabinet. The data lists shall include: conductor identification number, wire gauge, wire insulation type, "FROM" terminal identification, "TO" terminal identification, and remarks. The preliminary lists generated by the Contractor will be submitted for approval to the Contracting Officer and will be updated to As-Built conditions by the Contractor. The As-Built data lists shall be placed in a document holder within each enclosure.

3.1.3 Grounding

All ground bars shall be connected to the counterpoise via a #10 AWG conductor. Within the enclosure all required equipment shall be grounded to meet the manufacturer's specifications.

3.1.4 Indicator Lights, Switches, and Pushbuttons

Indicator lights, switches, and pushbuttons shall be mounted through the enclosure and shall be arranged to allow easy vision and operation of each device. Each device shall have a nameplate and/or legend plate as indicated on the drawings. Nameplate wordings shall be as indicated on the drawings.

3.1.5 Transient Voltage Surge Suppression Devices

Transient voltage surge suppression (TVSS) devices shall be installed to minimize effects of nearby lightning strikes. TVSS shall be provided for each control circuit ladder. Each ladder may contain any combination of the following devices: Power supplies (e.g., 24 volt), relays, lights, switches etc.

3.1.6 Terminal Blocks

As a minimum, any device that connects to a field device (devices not located in the Control Panel or Level Panels) shall be connected to a terminal block. A connection diagram similar to the drawings shall be provided to the field Contractor for field connections to the panels.

3.1.7 Circuit Breakers

As a minimum, any 120 volt device i.e. (lights, 24 VDC power supplies, etc. shall be provided with an individual circuit breaker. Additionally 120 volt terminal boards connecting to field devices (devices not located in the Control Panel or Level Panels) shall be protected by a 120 volt circuit breaker.

3.1.8 Power Supplies

Provide and install all 120 VAC and 24 VDC power supply.

3.1.9 Alarm Horns

The alarm horns shall be annunciated via signals initiated by hardwires field contacts or internal relay contacts. Annunciation for alarm horns and

indication of lamps shall be provided as shown on control diagrams on the drawings.

3.2 INSTALLATION

Installation shall conform to the manufacturer's drawings, written recommendations and directions.

3.2.1 Shop Drawing

The shop drawing shall be clear and readable and preferably drawn using a computer aided drafting package. At the conclusion of the project the diagram drawings shall be redrafted to include all as-built conditions. These updated drawings shall be included in the O&M Manuals and appropriate section of the drawings placed in a data pocket located in each of the enclosures. The shop drawing at a minimum shall show:

a. Overall dimensions, front, side and interior elevation views of the Control Panel, Day Tank Level Panel, and Additive Tank Level Panel showing size, location and labeling of each device.

b. Complete internal wiring diagrams including external connection diagrams for all field wiring connections.

c. Bill of materials.

d. Written control sequence covering all inputs, outputs, and control scheme.

3.2.2 System Start-Up and Testing

A step-by-step Testing Plan of all panels shall be submitted. The test shall be designed to show that every device (lights, switches, personal computer display screens, alarms, etc.) on the PCP and personal computer is in working order and that the PLC program controls the system per specifications. The test shall be performed in conjunction with Section 33 08 55 COMMISSIONING OF FUEL FACILITY SYSTEMS. The plan shall include a place for the Contractor and government representative to initial each step of the plan after satisfactory completion and acceptance of each step. The complete initialed Record of Test shall be certified by the Contractor and then submitted.

-- End of Section --

SECTION 33 11 00

WATER DISTRIBUTION
02/11

PART 1 GENERAL

1.1 REFERENCES

The publications listed below form a part of this specification to the extent referenced. The publications are referred to within the text by the basic designation only.

AMERICAN WATER WORKS ASSOCIATION (AWWA)

AWWA B300	(2010; Addenda 2011) Hypochlorites
AWWA B301	(2010) Liquid Chlorine
AWWA C104/A21.4	(2008; Errata 2010) Cement-Mortar Lining for Ductile-Iron Pipe and Fittings for Water
AWWA C105/A21.5	(2010) Polyethylene Encasement for Ductile-Iron Pipe Systems
AWWA C110/A21.10	(2012) Ductile-Iron and Gray-Iron Fittings for Water
AWWA C111/A21.11	(2012) Rubber-Gasket Joints for Ductile-Iron Pressure Pipe and Fittings
AWWA C115/A21.15	(2011) Flanged Ductile-Iron Pipe With Ductile-Iron or Gray-Iron Threaded Flanges
AWWA C151/A21.51	(2009) Ductile-Iron Pipe, Centrifugally Cast, for Water
AWWA C153/A21.53	(2011) Ductile-Iron Compact Fittings for Water Service
AWWA C500	(2009) Metal-Seated Gate Valves for Water Supply Service
AWWA C502	(2005) Dry-Barrel Fire Hydrants
AWWA C509	(2009) Resilient-Seated Gate Valves for Water Supply Service
AWWA C515	(2009) Reduced-Wall, Resilient-Seated Gate Valves for Water Supply Service
AWWA C600	(2010) Installation of Ductile-Iron Water Mains and Their Appurtenances
AWWA C651	(2005; Errata 2005) Standard for Disinfecting Water Mains

ASME INTERNATIONAL (ASME)

ASME B16.1	(2010) Gray Iron Pipe Flanges and Flanged Fittings Classes 25, 125, and 250
ASME B18.2.2	(2010) Nuts for General Applications: Machine Screw Nuts, Hex, Square, Hex Flange, and Coupling Nuts (Inch Series)
ASME B18.5.2.1M	(2006; R 2011) Metric Round Head Short Square Neck Bolts
ASME B18.5.2.2M	(1982; R 2010) Metric Round Head Square Neck Bolts

ASTM INTERNATIONAL (ASTM)

ASTM A307	(2012) Standard Specification for Carbon Steel Bolts, Studs, and Threaded Rod 60 000 PSI Tensile Strength
ASTM A47/A47M	(1999; R 2009) Standard Specification for Ferritic Malleable Iron Castings
ASTM A48/A48M	(2003; R 2012) Standard Specification for Gray Iron Castings
ASTM A536	(1984; R 2009) Standard Specification for Ductile Iron Castings
ASTM A563	(2007; R 2013) Standard Specification for Carbon and Alloy Steel Nuts
ASTM C94/C94M	(2014) Standard Specification for Ready-Mixed Concrete

NATIONAL FIRE PROTECTION ASSOCIATION (NFPA)

NFPA 24	(2013) Standard for the Installation of Private Fire Service Mains and Their Appurtenances

UNDERWRITERS LABORATORIES (UL)

UL 246	(2011; Reprint Feb 2013) Hydrants for Fire-Protection Service
UL 262	(2004; Reprint Oct 2011) Gate Valves for Fire-Protection Service

1.2 DESIGN REQUIREMENTS

1.2.1 Water Distribution Mains

Provide water distribution mains indicated as 4 through 12 inch diameter pipe sizes of ductile-iron, pipe. Provide ductile iron pipe for 12 inch diameter or larger pipe sizes. Also provide water main accessories, gate valves and check valves as specified and where indicated.

1.3 SUBMITTALS

Government approval is required for submittals with a "G" designation; submittals not having a "G" designation are for Contractor Quality Control approval. The following shall be submitted in accordance with Section 01 33 00 SUBMITTAL PROCEDURES:

SD-03 Product Data

Piping Materials

Water distribution main piping, fittings, joints, valves, and coupling

Hydrants

Valve boxes

Submit manufacturer's standard drawings or catalog cuts, except submit both drawings and cuts for push-on joints. Include information concerning gaskets with submittal for joints and couplings.

SD-06 Test Reports

Bacteriological Disinfection; G.

Test results from commercial laboratory verifying disinfection

SD-07 Certificates

Water distribution main piping, fittings, joints, valves, and coupling

Lining

Fire hydrants

Certificates shall attest that tests set forth in each applicable referenced publication have been performed, whether specified in that publication to be mandatory or otherwise and that production control tests have been performed at the intervals or frequency specified in the publication. Other tests shall have been performed within 3 years of the date of submittal of certificates on the same type, class, grade, and size of material as is being provided for the project.

SD-08 Manufacturer's Instructions

Installation procedures for water piping

1.4 DELIVERY, STORAGE, AND HANDLING

1.4.1 Delivery and Storage

Inspect materials delivered to site for damage. Unload and store with minimum handling. Store materials on site in enclosures or under protective covering. Store rubber gaskets under cover out of direct sunlight. Do not store materials directly on the ground. Keep inside of

pipes, fittings, valves and hydrants free of dirt and debris.

1.4.2 Handling

Handle pipe, fittings, valves, hydrants, and other accessories in a manner to ensure delivery to the trench in sound undamaged condition. Take special care to avoid injury to coatings and linings on pipe and fittings; make repairs if coatings or linings are damaged. Do not place any other material or pipe inside a pipe or fitting after the coating has been applied. Carry, do not drag pipe to the trench. Use of pinch bars and tongs for aligning or turning pipe will be permitted only on the bare ends of the pipe. The interior of pipe and accessories shall be thoroughly cleaned of foreign matter before being lowered into the trench and shall be kept clean during laying operations by plugging or other approved method. Before installation, the pipe shall be inspected for defects. Material found to be defective before or after laying shall be replaced with sound material without additional expense to the Government. Store rubber gaskets that are not to be installed immediately, under cover out of direct sunlight.

PART 2 PRODUCTS

2.1 WATER DISTRIBUTION MAIN MATERIALS

2.1.1 Piping Materials

2.1.1.1 Ductile-Iron Piping

a. Pipe and Fittings: Pipe, AWWA C151/A21.51, Pressure Class 350. Fittings, AWWA C110/A21.10 or AWWA C153/A21.53; fittings with push-on joint ends conforming to the same requirements as fittings with mechanical-joint ends, except that the bell design shall be modified, as approved, for push-on joint. Fittings shall have pressure rating at least equivalent to that of the pipe. Ends of pipe and fittings shall be suitable for the specified joints. Pipe and fittings shall have cement-mortar lining, AWWA C104/A21.4, standard thickness.

b. Joints and Jointing Material:

1. Joints: Joints for pipe and fittings shall be push-on joints or mechanical joints unless otherwise indicated. Provide mechanical joints where indicated. Provide flanged joints where indicated. Provide mechanically coupled type joints using a sleeve-type mechanical coupling where indicated. Joints made with sleeve-type mechanical coupling may be used in lieu of push-on joint, subject to the limitations specified in paragraph entitled "Sleeve-Type Mechanical Couplings."

2. Push-On Joints: Shape of pipe ends and fitting ends, gaskets, and lubricant for joint assembly, AWWA C111/A21.11.

3. Mechanical Joints: Dimensional and material requirements for pipe ends, glands, bolts and nuts, and gaskets, AWWA C111/A21.11.

4. Flanged Joints: Bolts, nuts, and gaskets for flanged connections as recommended in the Appendix to AWWA C115/A21.15. Flange for setscrewed flanges shall be of ductile iron, ASTM A536, Grade 65-45-12, and conform to the applicable requirements of ASME B16.1, Class 250. Setscrews for setscrewed flanges shall be 190,000 psi

tensile strength, heat treated and zinc-coated steel. Gasket and lubricants for setscrewed flanges, in accordance with applicable requirements for mechanical-joint gaskets specified in AWWA C111/A21.11. Design of setscrewed gasket shall provide for confinement and compression of gasket when joint to adjoining flange is made.

5. Sleeve-Type Mechanical Coupled Joints: As specified in paragraph entitled "Sleeve-Type Mechanical Couplings."

2.1.2 Valves, Hydrants, and Other Water Main Accessories

2.1.2.1 Gate Valves

AWWA C500, AWWA C509, AWWA C515,or UL 262. Unless otherwise specified, valves conforming to:

a. AWWA C500 shall be nonrising stem type with double-disc gates and mechanical-joint ends or push-on joint ends as appropriate for the adjoining pipe.

b. AWWA C509 or AWWA C515 shall be nonrising stem type with mechanical-joint ends or resilient-seated gate valves 3 to 12 inches in size.

c. UL 262 shall be inside-screw type with operating nut, double-disc or split-wedge type gate, designed for a hydraulic working pressure of 150 psi, and shall have mechanical-joint ends or push-on joint ends as appropriate for the pipe to which it is joined. Materials for UL 262 valves shall conform to the reference standards specified in AWWA C500. Valves shall open by counterclockwise rotation of the valve stem.

2.1.2.2 Fire Hydrants

Dry-barrel type. Paint hydrants with at least one coat of primer and two coats of enamel paint. Barrel and bonnet colors shall be in accordance with UFC 3-600-01. Stencil hydrant number and main size on the hydrant barrel using black stencil paint.

a. Dry-Barrel Type Fire Hydrants: Dry-barrel type hydrants, AWWA C502 or UL 246, "Base Valve" design, shall have 6 inch inlet, 5 1/4 inch valve opening, one 4 1/2 inch pumper connection, and two 2 1/2 inch hose connections. Pumper connection and hose connections shall be individually valved with independent nozzle gate valves. Inlet shall have mechanical-joint end only; end shall conform to the applicable requirements as specified for the joint. Size and shape of operating nut, cap nuts, and threads on hose and pumper connections shall be as specified in AWWA C502. All hydrants shall be "traffic type," and shall have frangible sections as mentioned in AWWA C502. The traffic type hydrant shall have special couplings joining upper and lower sections of hydrant barrel and upper and lower sections of hydrant stem and shall be designed to have the special couplings break from a force not less than that which would be imposed by a moving vehicle; hydrant shall operate properly under normal conditions. Contractor shall verify final fire department nozzle configuration with local base fire department prior to ordering fire hydrants.

2.1.2.3 Valve Boxes

Provide a valve box for each gate valve on buried piping, except where indicator post is shown. Valve boxes shall be of cast iron of a size suitable for the valve on which it is to be used and shall be adjustable. Provide a round head. Cast the word "WATER" on the lid. The least diameter of the shaft of the box shall be 5 1/4 inches. Cast-iron box shall have a heavy coat of bituminous paint.

2.1.2.4 Sleeve-Type Mechanical Couplings

Couplings shall be designed to couple plain-end piping by compression of a ring gasket at each end of the adjoining pipe sections. The coupling shall consist of one middle ring flared or beveled at each end to provide a gasket seat; two follower rings; two resilient tapered rubber gaskets; and bolts and nuts to draw the follower rings toward each other to compress the gaskets. The middle ring and the follower rings shall be true circular sections free from irregularities, flat spots, and surface defects; the design shall provide for confinement and compression of the gaskets. For ductile iron pipe, the middle ring shall be of cast-iron and the follower rings shall be of malleable or ductile iron. Cast iron, ASTM A48/A48M not less than Class 25. Malleable and ductile iron shall, conform to ASTM A47/A47M and ASTM A536, respectively. Gaskets shall be designed for resistance to set after installation and shall meet the applicable requirements specified for gaskets for mechanical joint in AWWA C111/A21.11. Bolts shall be track-head type, ASTM A307, Grade A, with nuts, ASTM A563, Grade A; or round-head square-neck type bolts, ASME B18.5.2.1M and ASME B18.5.2.2M with hex nuts, ASME B18.2.2. Bolts shall be 5/8 inch in diameter. Bolt holes in follower rings shall be of a shape to hold fast the necks of the bolts used. Mechanically coupled joints using a sleeve-type mechanical coupling shall not be used as an optional method of jointing except where pipeline is adequately anchored to resist tension pull across the joint. Mechanical couplings shall provide a tight flexible joint under all reasonable conditions, such as pipe movements caused by expansion, contraction, slight setting or shifting in the ground, minor variations in trench gradients, and traffic vibrations. Couplings shall be of strength not less than the adjoining pipeline.

2.2 DISINFECTION

Chlorinating materials shall conform to the following:

Chlorine, Liquid: AWWA B301.

Hypochlorite, Calcium and Sodium: AWWA B300.

PART 3 EXECUTION

3.1 INSTALLATION OF PIPELINES

3.1.1 General Requirements for Installation of Pipelines

These requirements shall apply to all pipeline installation except where specific exception is made in the "Special Requirements..." paragraphs.

3.1.1.1 Location of Water Lines

Do not lay water lines in the same trench with other utilities.

a. Water Piping Installation Parallel With Sewer Piping

Normal Conditions: Lay water piping at least 10 feet horizontally from a sewer or sewer manhole whenever possible. Measure the distance edge-to-edge.

1. The bottom (invert) of the water piping shall be at least 18 inches above the top (crown) of the sewer piping.

2. Where this vertical separation cannot be obtained, the sewer piping shall be constructed of AWWA-approved water pipe and pressure tested in place without leakage prior to backfilling. Approved waste water disposal method shall be utilized.

3. The sewer manhole shall be of watertight construction and tested in place.

b. Installation of Water Piping Crossing Sewer Piping

1. Normal Conditions: Water piping crossing above sewer piping shall be laid to provide a separation of at least 18 inches between the bottom of the water piping and the top of the sewer piping.

2. Unusual Conditions: When local conditions prevent a vertical separation described above, use the following construction:

(a) Sewer piping passing over or under water piping shall be constructed of AWWA-approved ductile iron water piping, pressure tested in place without leakage prior to backfilling.

(b) Water piping passing under sewer piping shall, in addition, be protected by providing a vertical separation of at least 18 inches between the bottom of the sewer piping and the top of the water piping; adequate structural support for the sewer piping to prevent excessive deflection of the joints and the settling on and breaking of the water piping; and that the length, minimum 20 feet, of the water piping be centered at the point of the crossing so that joints shall be equidistant and as far as possible from the sewer piping.

c. Sewer Piping or Sewer Manholes: No water piping shall pass through or come in contact with any part of a sewer manhole.

3.1.1.2 Earthwork

Perform earthwork operations in accordance with Section 31 23 00.00 20 EXCAVATION AND FILL.

3.1.1.3 Pipe Laying and Jointing

Remove fins and burrs from pipe and fittings. Before placing in position, clean pipe, fittings, valves, and accessories, and maintain in a clean condition. Provide proper facilities for lowering sections of pipe into trenches. Do not under any circumstances drop or dump pipe, fittings, valves, or any other water line material into trenches. Cut pipe in a neat workmanlike manner accurately to length established at the site and work into place without springing or forcing. Replace by one of the proper length any pipe or fitting that does not allow sufficient space for proper installation of jointing material. Blocking or wedging between bells and

spigots will not be permitted. Lay bell-and-spigot pipe with the bell end pointing in the direction of laying. Grade the pipeline in straight lines; avoid the formation of dips and low points. Support pipe at proper elevation and grade. Secure firm, uniform support. Wood support blocking will not be permitted. Lay pipe so that the full length of each section of pipe and each fitting will rest solidly on the pipe bedding; excavate recesses to accommodate bells, joints, and couplings. Provide anchors and supports where indicated and where necessary for fastening work into place. Make proper provision for expansion and contraction of pipelines. Keep trenches free of water until joints have been properly made. At the end of each work day, close open ends of pipe temporarily with wood blocks or bulkheads. Do not lay pipe when conditions of trench or weather prevent installation. Depth of cover over top of pipe shall not be less than 3 1/2 feet.

3.1.1.4 Connections to Existing Water Lines

Make connections to existing water lines after approval is obtained and with a minimum interruption of service on the existing line.

3.1.1.5 Penetrations

Pipe passing through walls of valve pits and structures shall be provided with ductile-iron or Schedule 40 steel wall sleeves. Annular space between walls and sleeves shall be filled with rich cement mortar. Annular space between pipe and sleeves shall be filled with mastic.

3.1.1.6 Flanged Pipe

Flanged pipe shall only be installed above ground or with the flanges in valve pits.

3.1.2 Special Requirements for Installation of Water Mains

3.1.2.1 Installation of Ductile-Iron Piping

Unless otherwise specified, install pipe and fittings in accordance with paragraph entitled "General Requirements for Installation of Pipelines" and with the requirements of AWWA C600 for pipe installation, joint assembly, valve-and-fitting installation, and thrust restraint.

a. Jointing: Make push-on joints with the gaskets and lubricant specified for this type joint; assemble in accordance with the applicable requirements of AWWA C600 for joint assembly. Make mechanical joints with the gaskets, glands, bolts, and nuts specified for this type joint; assemble in accordance with the applicable requirements of AWWA C600 for joint assembly and the recommendations of Appendix A to AWWA C111/A21.11. Make flanged joints with the gaskets, bolts, and nuts specified for this type joint. Make flanged joints up tight; avoid undue strain on flanges, fittings, valves, and other equipment and accessories. Align bolt holes for each flanged joint. Use full size bolts for the bolt holes; use of undersized bolts to make up for misalignment of bolt holes or for any other purpose will not be permitted. Do not allow adjoining flange faces to be out of parallel to such degree that the flanged joint cannot be made watertight without overstraining the flange. When flanged pipe or fitting has dimensions that do not allow the making of a proper flanged joint as specified, replace it by one of proper dimensions. Use setscrewed flanges to make flanged joints where conditions prevent the use of full-length flanged

pipe and assemble in accordance with the recommendations of the setscrewed flange manufacturer. Assemble joints made with sleeve-type mechanical couplings in accordance with the coupling manufacturer.

b. Allowable Deflection: The maximum allowable deflection shall be as given in AWWA C600. If the alignment requires deflection in excess of the above limitations, special bends or a sufficient number of shorter lengths of pipe shall be furnished to provide angular deflections within the limit set forth.

c. Pipe Anchorage: Provide concrete thrust blocks (reaction backing) for pipe anchorage. Thrust blocks shall be in accordance with the requirements of AWWA C600 for thrust restraint, except that size and positioning of thrust blocks shall be as indicated. Use concrete, ASTM C94/C94M, having a minimum compressive strength of 2,500 psi at 28 days; or use concrete of a mix not leaner than one part cement, 2 1/2 parts sand, and 5 parts gravel, having the same minimum compressive strength.

d. Exterior Protection: Completely encase buried ductile iron pipelines with polyethylene tube or sheet, using Class A polyethylene film, in accordance with AWWA C105/A21.5.

3.1.2.2 Installation of Valves and Hydrants

a. Installation of Valves: Install gate valves, AWWA C500 and UL 262, in accordance with the requirements of AWWA C600 for valve-and-fitting installation and with the recommendations of the Appendix ("Installation, Operation, and Maintenance of Gate Valves") to AWWA C500. Install gate valves, AWWA C509 or AWWA C515, in accordance with the requirements of AWWA C600 for valve-and-fitting installation and with the recommendations of the Appendix ("Installation, Operation, and Maintenance of Gate Valves") to AWWA C509 or AWWA C515. Make and assemble joints to gate valves as specified for making and assembling the same type joints between pipe and fittings.

b. Installation of Hydrants: Install hydrants in accordance with AWWA C600 for hydrant installation and as indicated. Make and assemble joints as specified for making and assembling the same type joints between pipe and fittings. Install hydrants with the 4 1/2 inch connections facing the adjacent paved surface. If there are two paved adjacent surfaces, contact the Contracting Officer for further instructions.

3.1.3 Disinfection

Prior to disinfection, obtain Contracting Officer approval of the proposed method for disposal of waste water from disinfection procedures. Disinfect new water piping and existing water piping affected by Contractor's operations in accordance with AWWA C651. Fill piping systems with solution containing minimum of 50 parts per million of available chlorine and allow solution to stand for minimum of 24 hours. Flush solution from the systems with domestic water until maximum residual chlorine content is within the range of 0.2 and 0.5 parts per million, or the residual chlorine content of domestic water supply. Obtain at least two consecutive satisfactory bacteriological samples from new water piping, analyze by a certified laboratory, and submit the results prior to the new water piping being placed into service. Disinfection of systems supplying nonpotable water is not required.

3.2 FIELD QUALITY CONTROL

3.2.1 Field Tests and Inspections

Prior to hydrostatic testing, obtain Contracting Officer approval of the proposed method for disposal of waste water from hydrostatic testing. The Contracting Officer will conduct field inspections and witness field tests specified in this section. The Contractor shall perform field tests, and provide labor, equipment, and incidentals required for testing. The Contractor shall produce evidence, when required, that any item of work has been constructed in accordance with the drawings and specifications. Do not begin testing on any section of a pipeline where concrete thrust blocks have been provided until at least 5 days after placing of the concrete.

3.2.2 Testing Procedure

3.2.2.1 Hydrostatic Testing

Test water mains and water service lines in accordance with the applicable specified standard. Where water mains and water service lines provide fire service, test in accordance with the special testing requirements given in paragraph entitled "Special Testing Requirements for Fire Service." Test ductile-iron water mains in accordance with the requirements of AWWA C600 for hydrostatic testing. The amount of leakage on ductile-iron pipelines with mechanical-joints or push-on joints shall not exceed the amounts given in AWWA C600; no leakage will be allowed at joints made by any other method.

3.2.3 Special Testing Requirements for Fire Service

Test water mains and water service lines providing fire service or water and fire service in accordance with NFPA 24. The additional water added to the system must not exceed the limits given in NFPA 24

3.3 CLEANUP

Upon completion of the installation of water lines, and appurtenances, all debris and surplus materials resulting from the work shall be removed.

-- End of Section --

SECTION 33 40 00

STORM DRAINAGE AND CONTAINMENT DRAINAGE
02/10

PART 1 GENERAL

1.1 REFERENCES

The publications listed below form a part of this specification to the extent referenced. The publications are referred to within the text by the basic designation only.

ASTM INTERNATIONAL (ASTM)

ASTM A123/A123M	(2013) Standard Specification for Zinc (Hot-Dip Galvanized) Coatings on Iron and Steel Products
ASTM A48/A48M	(2003; R 2012) Standard Specification for Gray Iron Castings
ASTM A536	(1984; R 2009) Standard Specification for Ductile Iron Castings
ASTM A716	(2008) Standard Specification for Ductile Iron Culvert Pipe
ASTM B26/B26M	(2012) Standard Specification for Aluminum-Alloy Sand Castings
ASTM C1103	(2003; R 2009) Standard Practice for Joint Acceptance Testing of Installed Precast Concrete Pipe Sewer Lines
ASTM C231/C231M	(2010) Standard Test Method for Air Content of Freshly Mixed Concrete by the Pressure Method
ASTM C443	(2011) Standard Specification for Joints for Concrete Pipe and Manholes, Using Rubber Gaskets
ASTM C478	(2013) Standard Specification for Precast Reinforced Concrete Manhole Sections
ASTM C76	(2014) Standard Specification for Reinforced Concrete Culvert, Storm Drain, and Sewer Pipe
ASTM C828	(2011) Low-Pressure Air Test of Vitrified Clay Pipe Lines
ASTM C923	(2008; R 2013) Standard Specification for Resilient Connectors Between Reinforced Concrete Manhole Structures, Pipes and Laterals

ASTM C924	(2002; R 2009) Testing Concrete Pipe Sewer Lines by Low-Pressure Air Test Method
ASTM C990	(2009) Standard Specification for Joints for Concrete Pipe, Manholes and Precast Box Sections Using Preformed Flexible Joint Sealants
ASTM D1056	(2007) Standard Specification for Flexible Cellular Materials - Sponge or Expanded Rubber
ASTM D1171	(1999; R 2007) Rubber Deterioration - Surface Ozone Cracking Outdoors or Chamber (Triangular Specimens)
ASTM D1557	(2012) Standard Test Methods for Laboratory Compaction Characteristics of Soil Using Modified Effort (56,000 ft-lbf/ft3) (2700 kN-m/m3)
ASTM D1751	(2004; E 2013; R 2013) Standard Specification for Preformed Expansion Joint Filler for Concrete Paving and Structural Construction (Nonextruding and Resilient Bituminous Types)
ASTM D1752	(2004a; R 2013) Standard Specification for Preformed Sponge Rubber Cork and Recycled PVC Expansion
ASTM D2167	(2008) Density and Unit Weight of Soil in Place by the Rubber Balloon Method
ASTM D6938	(2010) Standard Test Method for In-Place Density and Water Content of Soil and Soil-Aggregate by Nuclear Methods (Shallow Depth)

AMERICAN WATER WORKS ASSOCIATION (AWWA)

AWWA C509	(2009) Resilient-Seated Gate Valves for Water Supply Service

UNDERWRITERS LABORATORIES (UL)

UL 789	(2004; Reprint Feb 2013) Standard for Indicator Posts for Fire-Protection Service

1.2 SUBMITTALS

Government approval is required for submittals with a "G" designation; submittals not having a "G" designation are for Contractor Quality Control approval. Submit the following in accordance with Section 01 33 00 SUBMITTAL PROCEDURES:

SD-03 Product Data

Placing Pipe

Submit printed copies of the manufacturer's recommendations for installation procedures of the material being placed, prior to installation.

Pipe for Culverts and Storm Drains
Pipe for Containment Drains
Gaskets
Check Valve
Gate Valves
Indicator Posts

SD-07 Certificates

Pipeline Testing
Hydrostatic Test on Watertight Joints
Determination of Density
Frame and Cover for Gratings

1.3 DELIVERY, STORAGE, AND HANDLING

1.3.1 Delivery and Storage

Materials delivered to site shall be inspected for damage, unloaded, and stored with a minimum of handling. Materials shall not be stored directly on the ground. The inside of pipes and fittings shall be kept free of dirt and debris. Before, during, and after installation, plastic pipe and fittings shall be protected from any environment that would result in damage or deterioration to the material. Keep a copy of the manufacturer's instructions available at the construction site at all times and follow these instructions unless directed otherwise by the Contracting Officer. Solvents, solvent compounds, lubricants, elastomeric gaskets, and any similar materials required to install plastic pipe shall be stored in accordance with the manufacturer's recommendations and shall be discarded if the storage period exceeds the recommended shelf life. Solvents in use shall be discarded when the recommended pot life is exceeded.

1.3.2 Handling

Materials shall be handled in a manner that ensures delivery to the trench in sound, undamaged condition. Pipe shall be carried to the trench, not dragged.

PART 2 PRODUCTS

2.1 PIPE FOR CULVERTS AND STORM DRAINS

Pipe for culverts and storm drains shall be of the sizes indicated and shall conform to the requirements specified.

2.1.1 Concrete Pipe

Manufactured in accordance with and conforming to ASTM C76, Class IV.

2.2 PIPE FOR CONTAINMENT DRAINS

Pipe for containment drains shall be of the sizes indicated and shall conform to the requirements specified.

2.2.1 Ductile Iron Pipe

ASTM A716.

2.3 DRAINAGE STRUCTURES

2.3.1 Flared End Sections

Sections shall be reinforced concrete pipe meeting requirements of ASTM C76.

2.4 MISCELLANEOUS MATERIALS

2.4.1 Concrete

Unless otherwise specified, concrete and reinforced concrete shall conform to the requirements for 4,000 psi concrete under Section 03 30 00 CAST-IN-PLACE CONCRETE. The concrete mixture shall have air content by volume of concrete, based on measurements made immediately after discharge from the mixer, of 5 to 7 percent when maximum size of coarse aggregate exceeds 1-1/2 inches. Air content shall be determined in accordance with ASTM C231/C231M. The concrete covering over steel reinforcing shall not be less than 1 inch thick for covers and not less than 1-1/2 inches thick for walls and flooring. Concrete covering deposited directly against the ground shall have a thickness of at least 3 inches between steel and ground. Expansion-joint filler material shall conform to ASTM D1751, or ASTM D1752, or shall be resin-impregnated fiberboard conforming to the physical requirements of ASTM D1752.

2.4.2 Precast Reinforced Concrete Manholes

Conform to ASTM C478. Joints between precast concrete risers and tops shall be made with flexible watertight, rubber-type gaskets meeting the requirements of paragraph JOINTS.

2.4.3 Frame and Cover for Gratings

Submit certification on the ability of frame and cover or gratings to carry the imposed live load. Frame and cover for gratings shall be cast gray iron, ASTM A48/A48M, Class 35B; cast ductile iron, ASTM A536, Grade 65-45-12; or cast aluminum, ASTM B26/B26M, Alloy 356.OT6. Weight, shape, size, and waterway openings for grates and curb inlets shall be as indicated on the plans. If frame and cover are for storm sewer, the word "Storm Sewer" shall be stamped or cast into covers so that it is plainly visible.

2.4.4 Joints

2.4.4.1 Flexible Watertight Joints

a. Materials: Flexible watertight joints shall be made with rubber-type gaskets for concrete pipe. The design of joints and the physical requirements for rubber-type gaskets shall conform to ASTM C443. Gaskets shall have not more than one factory-fabricated splice, except that two factory-fabricated splices of the rubber-type gasket are permitted if the nominal diameter of the pipe being gasketed exceeds 54 inches.

b. Gaskets for ductile iron containment drain pipe shall be fuel resistant.

c. Test Requirements: Watertight joints shall be tested and shall meet test requirements of paragraph HYDROSTATIC TEST ON WATERTIGHT JOINTS. Rubber gaskets shall comply with the oil resistant gasket requirements of ASTM C443. Certified copies of test results shall be delivered to the Contracting Officer before gaskets or jointing materials are installed. Alternate types of watertight joint may be furnished, if specifically approved.

2.4.4.2 Flexible Watertight, Gasketed Joints

a. Gaskets: The closed-cell expanded rubber gaskets shall be a continuous band approximately 7 inches wide and approximately 3/8 inch thick, meeting the requirements of ASTM D1056, Type 2 A1, and shall have a quality retention rating of not less than 70 percent when tested for weather resistance by ozone chamber exposure, Method B of ASTM D1171. Rubber O-ring gaskets shall be 13/16 inch in diameter for pipe diameters of 36 inches or smaller and 7/8 inch in diameter for larger pipe having 1/2 inch deep end corrugation. Rubber O-ring gaskets shall be 1-3/8 inches in diameter for pipe having 1 inch deep end corrugations. O-rings shall meet the requirements of ASTM C990 or ASTM C443. Preformed flexible joint sealants shall conform to ASTM C990, Type B.

b. Connecting Bands: Connecting bands shall be of the type, size and sheet thickness of band, and the size of angles, bolts, rods and lugs as indicated or where not indicated as specified in the applicable standards or specifications for the pipe. Exterior rivet heads in the longitudinal seam under the connecting band shall be countersunk or the rivets shall be omitted and the seam welded. Watertight joints shall be tested and shall meet the test requirements of paragraph HYDROSTATIC TEST ON WATERTIGHT JOINTS.

2.4.5 Check Valve

a. Check valves shall be flexible inline-style. Check valves for containment drains shall be fuel resistant.

b. Check Valves are to be all rubber and the flow operated check type with slip-in cuff or flange connection. The entire check valve shall be ply reinforced throughout the body, disc and bill, which is cured and vulcanized into a one-piece unibody construction. A separate valve body or pipe used as the housing is not acceptable. The valve shall be manufactured with no metal, mechanical hinges or fasteners, which would be used to secure the disc or bill to the valve housing. The port area of the disc shall contour down, which shall allow passage of flow in one direction while preventing reverse flow. The entire valve shall fit within the pipe I.D. Once installed, the check valve shall not protrude beyond the face of the structure or end of the pipe.

c. The downstream end of the valve must be circumferentially in contact with the pipe while in the closed positions.

d. Check valves will be furnished with a set of stainless steel expansion clamps. The clamps, which will secure the valve in place, shall be installed inside the cuff portion of the valve based on installation orientation, and shall expand outwards by means of a turnbuckle. Each clamp shall be predrilled allowing for the valve to be pinned and secured into position in accordance with the manufacturer's

installation instructions.

2.4.6 Gate Valves for Containment Drains

AWWA C509 resilient-seated gate valves shall be nonrising stem type with mechanical-joint ends. Valves shall open by counterclockwise rotation of the valve stem. Stuffing boxes shall have o-ring stem seals. Stuffing boxes shall be bolted and constructed so as to permit easy removal of parts for repair. The valve shall have an indicator post flange.

2.4.6.1 Indicator Posts for Containment Drains

UL 789. Provide for gate valves where indicated.

2.5 STEEL LADDER

Steel ladder shall be provided where the depth of the storm drainage structure exceeds 12 feet. These ladders shall be not less than 16 inches in width, with 3/4 inch diameter rungs spaced 12 inches apart. The two stringers shall be a minimum 3/8 inch thick and 2-1/2 inches wide. Ladders and inserts shall be galvanized after fabrication in conformance with ASTM A123/A123M.

2.6 DOWNSPOUT BOOTS

Boots used to connect exterior downspouts to the storm-drainage system shall be of gray cast iron conforming to ASTM A48/A48M, Class 30B or 35B. Shape and size shall be as indicated.

2.7 RESILIENT CONNECTORS

Flexible, watertight connectors used for connecting pipe to manholes and inlets shall conform to ASTM C923.

2.8 HYDROSTATIC TEST ON WATERTIGHT JOINTS

2.8.1 Concrete Pipe

A hydrostatic test shall be made on the watertight joint types as proposed. Only one sample joint of each type needs testing; however, if the sample joint fails because of faulty design or workmanship, an additional sample joint may be tested. During the test period, gaskets or other jointing material shall be protected from extreme temperatures which might adversely affect the performance of such materials. Performance requirements for joints in reinforced concrete pipe shall conform to ASTM C990 or ASTM C443.

PART 3 EXECUTION

3.1 EXCAVATION FOR PIPE CULVERTS, STORM DRAINS, AND DRAINAGE STRUCTURES

Excavation of trenches, and for appurtenances and backfilling for culverts and storm drains, shall be in accordance with the applicable portions of Section 31 23 00.00 20 EXCAVATION AND FILL and the requirements specified below.

3.1.1 Trenching

The width of trenches at any point below the top of the pipe shall be not

greater than the outside diameter of the pipe plus 8 inches to permit satisfactory jointing and thorough tamping of the bedding material under and around the pipe. Sheeting and bracing, where required, shall be placed within the trench width as specified, without any overexcavation. Where trench widths are exceeded, redesign with a resultant increase in cost of stronger pipe or special installation procedures will be necessary. Cost of this redesign and increased cost of pipe or installation shall be borne by the Contractor without additional cost to the Government.

3.1.2 Removal of Rock

Rock in either ledge or boulder formation shall be replaced with suitable materials to provide a compacted earth cushion having a thickness between unremoved rock and the pipe of at least 8 inches or 1/2 inch for each foot of fill over the top of the pipe, whichever is greater, but not more than three-fourths the nominal diameter of the pipe. Where bell-and-spigot pipe is used, the cushion shall be maintained under the bell as well as under the straight portion of the pipe. Rock excavation shall be as specified and defined in Section 31 23 00.00 20 EXCAVATION AND FILL.

3.1.3 Removal of Unstable Material

Where wet or otherwise unstable soil incapable of properly supporting the pipe, as determined by the Contracting Officer, is unexpectedly encountered in the bottom of a trench, such material shall be removed to the depth required and replaced to the proper grade with select granular material, compacted as provided in paragraph BACKFILLING. When removal of unstable material is due to the fault or neglect of the Contractor while performing shoring and sheeting, water removal, or other specified requirements, such removal and replacement shall be performed at no additional cost to the Government.

3.2 BEDDING

The bedding surface for the pipe shall provide a firm foundation of uniform density throughout the entire length of the pipe.

3.2.1 Concrete Pipe Requirements

When no bedding class is specified or detailed on the drawings, concrete pipe shall be bedded in granular material minimum 4 inch in depth in trenches with soil foundation. Depth of granular bedding in trenches with rock foundation shall be 1/2 inch in depth per foot of depth of fill, minimum depth of bedding shall be 8 inch up to maximum depth of 24 inches. The middle third of the granular bedding shall be loosely placed. Bell holes and depressions for joints shall be removed and formed so entire barrel of pipe is uniformly supported. The bell hole and depressions for the joints shall be not more than the length, depth, and width required for properly making the particular type of joint.

3.2.2 Ductile Iron and Cast-Iron Pipe

Bedding for ductile iron and cast-iron pipe shall be as shown on the drawings.

3.3 PLACING PIPE

Each pipe shall be thoroughly examined before being laid; defective or damaged pipe shall not be used. Plastic pipe shall be protected from

exposure to direct sunlight prior to laying, if necessary to maintain adequate pipe stiffness and meet installation deflection requirements. Pipelines shall be laid to the grades and alignment indicated. Proper facilities shall be provided for lowering sections of pipe into trenches. Lifting lugs in vertically elongated metal pipe shall be placed in the same vertical plane as the major axis of the pipe. Pipe shall not be laid in water, and pipe shall not be laid when trench conditions or weather are unsuitable for such work. Diversion of drainage or dewatering of trenches during construction shall be provided as necessary. Deflection of installed flexible pipe shall not exceed the following limits:

TYPE OF PIPE	MAXIMUM ALLOWABLE DEFLECTION (percent)
Ductile Iron	3

Note post installation requirements of paragraph DEFLECTION TESTING in PART 3 of this specification for all pipe products including deflection testing requirements for flexible pipe.

3.3.1 Concrete and Ductile Iron Pipe

Laying shall proceed upgrade with spigot ends of bell-and-spigot pipe and tongue ends of tongue-and-groove pipe pointing in the direction of the flow.

3.4 JOINTING

3.4.1 Concrete Pipe

3.4.1.1 Flexible Watertight Joints

Gaskets and jointing materials shall be as recommended by the particular manufacturer in regard to use of lubricants, cements, adhesives, and other special installation requirements. Surfaces to receive lubricants, cements, or adhesives shall be clean and dry. Gaskets and jointing materials shall be affixed to the pipe not more than 24 hours prior to the installation of the pipe, and shall be protected from the sun, blowing dust, and other deleterious agents at all times. Gaskets and jointing materials shall be inspected before installing the pipe; any loose or improperly affixed gaskets and jointing materials shall be removed and replaced. The pipe shall be aligned with the previously installed pipe, and the joint pushed home. If, while the joint is being made the gasket becomes visibly dislocated the pipe shall be removed and the joint remade.

3.5 DRAINAGE STRUCTURES

3.5.1 Manholes and Inlets

Construction shall be of reinforced concrete or precast reinforced concrete, complete with frames and covers or gratings; and with fixed galvanized steel ladders where indicated. Pipe connections to concrete manholes and inlets shall be made with flexible, watertight connectors.

3.5.2 Walls and Headwalls

Construction shall be as indicated.

3.6 STEEL LADDER INSTALLATION

Ladder shall be adequately anchored to the wall by means of steel inserts spaced not more than 6 feet vertically, and shall be installed to provide at least 6 inches of space between the wall and the rungs. The wall along the line of the ladder shall be vertical for its entire length.

3.7 CHECK VALVE INSTALLATION

Valve shall be installed in accordance with manufacturer's written Installation and Operation Manual and approved submittals.

3.8 BACKFILLING

3.8.1 Backfilling Pipe in Trenches

After the pipe has been properly bedded, selected material from excavation or borrow, at a moisture content that will facilitate compaction, shall be placed along both sides of pipe in layers not exceeding 6 inches in compacted depth. The backfill shall be brought up evenly on both sides of pipe for the full length of pipe. The fill shall be thoroughly compacted under the haunches of the pipe. Each layer shall be thoroughly compacted with mechanical tampers or rammers. This method of filling and compacting shall continue until the fill has reached an elevation equal to the midpoint (spring line) of RCP or has reached an elevation of at least 12 inches above the top of the pipe for flexible pipe. The remainder of the trench shall be backfilled and compacted by spreading and rolling or compacted by mechanical rammers or tampers in layers not exceeding 8 inches. Tests for density shall be made as necessary to ensure conformance to the compaction requirements specified below. Where it is necessary, in the opinion of the Contracting Officer, that sheeting or portions of bracing used be left in place, the contract will be adjusted accordingly. Untreated sheeting shall not be left in place beneath structures or pavements.

3.8.2 Backfilling Pipe in Fill Sections

For pipe placed in fill sections, backfill material and the placement and compaction procedures shall be as specified below. The fill material shall be uniformly spread in layers longitudinally on both sides of the pipe, not exceeding 6 inches in compacted depth, and shall be compacted by rolling parallel with pipe or by mechanical tamping or ramming. Prior to commencing normal filling operations, the crown width of the fill at a height of 12 inches above the top of the pipe shall extend a distance of not less than twice the outside pipe diameter on each side of the pipe or 12 feet, whichever is less. After the backfill has reached at least 12 inches above the top of the pipe, the remainder of the fill shall be placed and thoroughly compacted in layers not exceeding 8 inches. Use select granular material for this entire region of backfill for flexible pipe installations.

3.8.3 Movement of Construction Machinery

When compacting by rolling or operating heavy equipment parallel with the pipe, displacement of or injury to the pipe shall be avoided. Movement of construction machinery over a culvert or storm drain at any stage of construction shall be at the Contractor's risk. Any damaged pipe shall be repaired or replaced.

3.8.4 Compaction

3.8.4.1 General Requirements

Cohesionless materials include gravels, gravel-sand mixtures, sands, and gravelly sands. Cohesive materials include clayey and silty gravels, gravel-silt mixtures, clayey and silty sands, sand-clay mixtures, clays, silts, and very fine sands. When results of compaction tests for moisture-density relations are recorded on graphs, cohesionless soils will show straight lines or reverse-shaped moisture-density curves, and cohesive soils will show normal moisture-density curves.

3.8.4.2 Minimum Density

Backfill over and around the pipe and backfill around and adjacent to drainage structures shall be compacted at the approved moisture content to the following applicable minimum density, which will be determined as specified below.

a. Under paved roads, streets, parking areas, and similar-use pavements including adjacent shoulder areas, the density shall be not less than 90 percent of maximum density for cohesive material and 95 percent of maximum density for cohesionless material, up to the elevation where requirements for pavement subgrade materials and compaction shall control.

b. Under unpaved or turfed traffic areas, density shall not be less than 90 percent of maximum density for cohesive material and 95 percent of maximum density for cohesionless material.

c. Under nontraffic areas, density shall be not less than that of the surrounding material.

3.8.5 Determination of Density

Testing is the responsibility of the Contractor and performed at no additional cost to the Government. Testing shall be performed by an approved commercial testing laboratory or by the Contractor subject to approval. Tests shall be performed in sufficient number to ensure that specified density is being obtained. Laboratory tests for moisture-density relations shall be made in accordance with ASTM D1557 except that mechanical tampers may be used provided the results are correlated with those obtained with the specified hand tamper. Field density tests shall be determined in accordance with ASTM D2167 or ASTM D6938. When ASTM D6938 is used, the calibration curves shall be checked and adjusted, if necessary, using the sand cone method as described in paragraph Calibration of the referenced publications. ASTM D6938 results in a wet unit weight of soil and ASTM D6938 shall be used to determine the moisture content of the soil. The calibration curves furnished with the moisture gauges shall be checked along with density calibration checks as described in ASTM D6938. Test results shall be furnished the Contracting Officer. The calibration checks of both the density and moisture gauges shall be made at the beginning of a job on each different type of material encountered and at intervals as directed.

3.9 PIPELINE TESTING

3.9.1 Leakage Tests

Lines shall be tested for leakage by low pressure air or water testing or exfiltration tests, as appropriate. Low pressure air testing for concrete pipe shall conform to ASTM C924. Low pressure air testing procedures for other pipe materials shall use the pressures and testing times prescribed in ASTM C828 or ASTM C924, after consultation with the pipe manufacturer. Testing of individual joints for leakage by low pressure air or water shall conform to ASTM C1103. Prior to exfiltration tests, the trench shall be backfilled up to at least the lower half of the pipe. If required, sufficient additional backfill shall be placed to prevent pipe movement during testing, leaving the joints uncovered to permit inspection. Visible leaks encountered shall be corrected regardless of leakage test results. When the water table is 2 feet or more above the top of the pipe at the upper end of the pipeline section to be tested, infiltration shall be measured using a suitable weir or other device acceptable to the Contracting Officer. An exfiltration test shall be made by filling the line to be tested with water so that a head of at least 2 feet is provided above both the water table and the top of the pipe at the upper end of the pipeline to be tested. The filled line shall be allowed to stand until the pipe has reached its maximum absorption, but not less than 4 hours. After absorption, the head shall be reestablished. The amount of water required to maintain this water level during a 2-hour test period shall be measured. Leakage as measured by the exfiltration test shall not exceed 250 gallons per inch in diameter per mile of pipeline per day. When leakage exceeds the maximum amount specified, satisfactory correction shall be made and retesting accomplished.

3.9.2 Deflection Testing

No sooner than 30 days after completion of installation and final backfill, an initial post installation inspection shall be accomplished. Clean or flush all lines prior to inspection. Perform a deflection test on entire length of installed flexible pipeline on completion of work adjacent to and over the pipeline, including leakage tests, backfilling, placement of fill, grading, paving, concreting, and any other superimposed loads. Deflection of pipe in the installed pipeline under external loads shall not exceed limits in paragraph PLACING PIPE above as percent of the average inside diameter of pipe. Determine whether the allowable deflection has been exceeded by use of a laser profiler or mandrel.

a. Laser Profiler Inspection: If deflection readings in excess of the allowable deflection of average inside diameter of pipe are obtained, remove pipe which has excessive deflection, and replace with new pipe. Initial post installation inspections of the pipe interior with laser profiling equipment shall utilize low barrel distortion video equipment for pipe sizes 48 inches or less. Use a camera with lighting suitable to allow a clear picture of the entire periphery of the pipe interior. Center the camera in the pipe both vertically and horizontally and be able to pan and tilt to a 90 degree angle with the axis of the pipe rotating 360 degrees. Use equipment to move the camera through the pipe that will not obstruct the camera's view or interfere with proper documentation of the pipe's condition. The video image shall be clear, focused, and relatively free from roll static or other image distortion qualities that would prevent the reviewer from evaluating the condition of the pipe. For initial post installation inspections for pipe sizes larger than 48 inches, visual inspection shall be completed of the pipe

interior.

b. Pull-Through Device Inspection: Pass the pull-through device through each run of pipe by pulling it by hand. If deflection readings in excess of the allowable deflection of average inside diameter of pipe are obtained, retest pipe by a run from the opposite direction. If retest continues to show excess allowable deflections of the average inside diameter of pipe, remove pipe which has excessive deflection, replace with new pipe, and completely retest in same manner and under same conditions. Pull-through device: The mandrel shall be rigid, nonadjustable having a minimum of 9 fins, including pulling rings at each end, engraved with the nominal pipe size and mandrel outside diameter. The mandrel shall be 5 percent less than the certified-actual pipe diameter for Plastic Pipe, 5 percent less than the certified-actual pipe diameter for Corrugated Steel and Aluminum Alloy, 3 percent less than the certified-actual pipe diameter for Concrete-Lined Corrugated Steel and Ductile Iron Culvert provided by manufacturer. When mandrels are utilized to verify deflection of flexible pipe products, the Government will verify the mandrel OD through the use of proving rings that are manufactured with an opening that is certified to be as shown above.

c. Deflection measuring device: Shall be approved by the Contracting Officer prior to use.

d. Warranty period test: Pipe found to have a deflection of greater than allowable deflection in paragraph PLACING PIPE above, just prior to end of one-year warranty period shall be replaced with new pipe and tested as specified for leakage and deflection. Inspect 100 percent of all pipe systems under the travel lanes, including curb and gutter. Random inspections of the remaining pipe system outside of the travel lanes shall represent at least 10 percent of the total pipe footage of each pipe size. Inspections shall be made, depending on the pipe size, with video camera or visual observations. In addition, for flexible pipe installations, perform deflection testing on 100 percent of all pipes under the travel lanes, including curb and gutter, with either a laser profiler or 9-fin mandrel. For flexible pipe, random deflection inspections of the pipe system outside of the travel lanes shall represent at least 10 percent of the total pipe footage of each pipe size. When mandrels are utilized to verify deflection of flexible pipe products during the final post installation inspection, the Government will verify the mandrel OD through the use of proving rings.

3.9.3 Post-Installation Inspection

One hundred percent of all reinforced concrete pipe installations shall be checked for joint separations, soil migration through the joint, cracks greater than 0.01 inches, settlement and alignment. One hundred percent of all flexible pipes shall be checked for rips, tears, joint separations, soil migration through the joint, cracks, localized bucking, bulges, settlement and alignment.

a. Replace pipes having cracks greater than 0.1 inches in width or deflection greater than 5 percent deflection. An engineer shall evaluate all pipes with cracks greater than 0.01 inches but less than 0.10 inches to determine if any remediation or repair is required. RCP with crack width less than 0.10 inches and located in a non-corrosive environment (pH 5.5) are generally acceptable. Repair or replace any pipe with crack exhibiting displacement across the crack, exhibiting

bulges, creases, tears, spalls, or delamination.

b. Reports: The deflection results and finial post installation inspection report shall include: a copy of all video taken, pipe location identification, equipment used for inspection, inspector name, deviation from design, grade, deviation from line, deflection and deformation of flexible pipe systems, inspector notes, condition of joints, condition of pipe wall (e.g. distress, cracking, wall damage dents, bulges, creases, tears, holes, etc.).

3.10 FIELD PAINTING

After installation, clean cast-iron frames, covers, gratings, and steps not buried in masonry or concrete to bare metal of mortar, rust, grease, dirt, and other deleterious materials and apply a coat of bituminous paint. Do not paint surfaces subject to abrasion.

-- End of Section --

SECTION 33 52 43

FUEL DISTRIBUTION
05/11

PART 1 GENERAL

1.1 SUMMARY

This section defines the requirements for pipe, piping components, and valves as related to an aviation fuel bulk distribution system. Provide the entire aviation fuel distribution system as a complete and fully operational system. Size, select, construct, and install equipment and system components to operate together as a complete system. Substitutions of functions specified herein will not be acceptable. Coordinate the work of the system manufacturer's service personnel during construction, testing, calibration, and acceptance of the system. Equipment and piping specified herein shall be designed to handle a working pressure of 275 psig at 100 deg F. Equipment specified herein shall be compatible with the fuel to be handled.

1.1.1 Related Sections

1.1.1.1 Exterior Epoxy Coating, Underground Carbon Steel Pipe

Coat in accordance with Section 33 52 80 LIQUID FUELS PIPELINE COATING SYSTEMS.

1.1.1.2 Exterior Coating, Aboveground Piping

Coat in accordance with Section 33 52 80 LIQUID FUELS PIPELINE COATING SYSTEMS.

1.1.1.3 Fuel Dispensing Equipment

Fuel dispensing and receipt equipment shall be in accordance with Section 33 57 00 BULK FUEL RECEIVING/DISPENSING EQUIPMENT.

1.1.1.4 Welding

Perform welding activities for pipe and piping components in accordance with Section 33 52 90.00 20 WELDING FOR POL SERVICE PIPING.

1.1.1.5 Commissioning

Commission the fueling system in accordance with Section 33 08 55 COMMISSIONING OF FUEL FACILITY SYSTEMS.

1.1.1.6 Earthwork

Excavate and backfill tanks as specified in Section 31 23 00.00 20 EXCAVATION AND FILL.

1.1.1.7 Cathodic Protection

Provide buried metallic components including pipe, anchors, conduit, etc., with a cathodic protection system as specified in Section 26 42 13.00 20 CATHODIC PROTECTION BY GALVANIC ANODES. Cathodic protection for metal

components that attach to a tank shall be coordinated and compatible with the tank corrosion control system.

1.2 REFERENCES

The publications listed below form a part of this specification to the extent referenced. The publications are referred to within the text by the basic designation only.

AMERICAN PETROLEUM INSTITUTE (API)

API RP 2003	(2008; 7th Ed) Protection Against Ignitions Arising out of Static, Lightning, and Stray Currents
API RP 540	(1999; R 2004) Electrical Installations in Petroleum Processing Plants
API Spec 5L	(2012) Specification for Line Pipe
API Spec 6D	(2008; Errata 1 2008; Errata 2 2008; Errata 3 2009; Addendum 1 2009; Errata 4 2010; Errata 5 2010; Errata 6 2011; Addendum 2 2011; Addendum 3 2012) Specification for Pipeline Valves
API Spec 607	(1999; R 2006; Errata 2006; Errata 2008; R 2011) Specification for Fire Test for Quarter-turn Valves
API Std 520	(2014; 9th Ed.) Sizing, Selection, and Installation of Pressure-relieving devices
API Std 526	(2009, 6th Ed.; Errata 1 2009; Errata 2 2012) Flanged Steel Pressure Relief Valves
API Std 594	(2010) Check Valves: Flanged, Lug, Wafer and Butt-Welding
API Std 607	(2010) Testing of Valves: Fire Test for Soft-Seated Quarter-Turn Valves
API Std 609	(2009) Butterfly Valves: Double Flanged, Lug-and-Wafer Type

ASME INTERNATIONAL (ASME)

ASME B1.1	(2003; R 2008) Unified Inch Screw Threads (UN and UNR Thread Form)
ASME B16.11	(2011) Forged Fittings, Socket-Welding and Threaded
ASME B16.21	(2011) Nonmetallic Flat Gaskets for Pipe Flanges
ASME B16.3	(2011) Malleable Iron Threaded Fittings, Classes 150 and 300

ASME B16.34	(2013) Valves - Flanged, Threaded and Welding End
ASME B16.39	(2009) Standard for Malleable Iron Threaded Pipe Unions; Classes 150, 250, and 300
ASME B16.5	(2013) Pipe Flanges and Flanged Fittings: NPS 1/2 Through NPS 24 Metric/Inch Standard
ASME B16.9	(2012) Standard for Factory-Made Wrought Steel Buttwelding Fittings
ASME B18.2.1	(2012; Errata 2013) Square and Hex Bolts and Screws (Inch Series)
ASME B18.2.2	(2010) Nuts for General Applications: Machine Screw Nuts, Hex, Square, Hex Flange, and Coupling Nuts (Inch Series)
ASME B31.3	(2012) Process Piping
ASME B31.4	(2012) Pipeline Transportation Systems for Liquid Hydrocarbons and Other Liquid
ASME B40.100	(2013) Pressure Gauges and Gauge Attachments
ASME BPVC SEC VIII D1	(2010) BPVC Section VIII-Rules for Construction of Pressure Vessels Division 1

ASTM INTERNATIONAL (ASTM)

ASTM A105/A105M	(2013) Standard Specification for Carbon Steel Forgings for Piping Applications
ASTM A182/A182M	(2014a) Standard Specification for Forged or Rolled Alloy and Stainless Steel Pipe Flanges, Forged Fittings, and Valves and Parts for High-Temperature Service
ASTM A193/A193M	(2012a) Standard Specification for Alloy-Steel and Stainless Steel Bolting Materials for High-Temperature Service and Other Special Purpose Applications
ASTM A194/A194M	(2013) Standard Specification for Carbon and Alloy Steel Nuts for Bolts for High-Pressure or High-Temperature Service, or Both
ASTM A216/A216M	(2012) Standard Specification for Steel Castings, Carbon, Suitable for Fusion Welding, for High-Temperature Service
ASTM A217/A217M	(2012) Standard Specification for Steel Castings, Martensitic Stainless and Alloy, for Pressure-Containing Parts, Suitable for High-Temperature Service

ASTM A234/A234M	(2013) Standard Specification for Piping Fittings of Wrought Carbon Steel and Alloy Steel for Moderate and High Temperature Service
ASTM A269	(2013) Standard Specification for Seamless and Welded Austenitic Stainless Steel Tubing for General Service
ASTM A276	(2013a) Standard Specification for Stainless Steel Bars and Shapes
ASTM A307	(2012) Standard Specification for Carbon Steel Bolts, Studs, and Threaded Rod 60 000 PSI Tensile Strength
ASTM A312/A312M	(2013b) Standard Specification for Seamless, Welded, and Heavily Cold Worked Austenitic Stainless Steel Pipes
ASTM A351/A351M	(2013) Standard Specification for Castings, Austenitic, for Pressure-Containing Parts
ASTM A358/A358M	(2012) Standard Specification for Electric-Fusion-Welded Austenitic Chromium-Nickel Stainless Steel Pipe for High-Temperature Service and General Applications
ASTM A36/A36M	(2012) Standard Specification for Carbon Structural Steel
ASTM A403/A403M	(2013a) Standard Specification for Wrought Austenitic Stainless Steel Piping Fittings
ASTM A53/A53M	(2012) Standard Specification for Pipe, Steel, Black and Hot-Dipped, Zinc-Coated, Welded and Seamless
ASTM A536	(1984; R 2009) Standard Specification for Ductile Iron Castings
ASTM A564/A564M	(2013) Standard Specification for Hot-Rolled and Cold-Finished Age-Hardening Stainless Steel Bars and Shapes
ASTM A733	(2003; E 2009; R 2009) Standard Specification for Welded and Seamless Carbon Steel and Austenitic Stainless Steel Pipe Nipples
ASTM A743/A743M	(2013a) Standard Specification for Castings, Iron-Chromium, Iron-Chromium-Nickel, Corrosion Resistant, for General Application
ASTM A790/A790M	(2007) Standard Specification Seamless and

	Welded Ferritic for Austenitic Stainless Steel
ASTM A815/A815M	(2007, a) Standard Specification for Wrought Ferritic, Ferritic/Austenitic, and Martensitic Stainless Steel Pipe Fittings
ASTM B117	(2011) Standard Practice for Operating Salt Spray (Fog) Apparatus
ASTM B687	(1999; R 2011) Standard Specification for Brass, Copper, and Chromium-Plated Pipe Nipples
ASTM B696	(2000; R 2009) Standard Specification for Coatings of Cadmium Mechanically Deposited
ASTM B766	(1986; R 2008) Standard Specification for Electrodeposited Coatings of Cadmium
ASTM D229	(2013) Rigid Sheet and Plate Materials Used for Electrical Insulation
ASTM D3308	(2012) PTFE Resin Skived Tape
ASTM F436	(2011) Hardened Steel Washers

INSTITUTE OF ELECTRICAL AND ELECTRONICS ENGINEERS (IEEE)

IEEE 1100	(2005) Emerald Book IEEE Recommended Practice for Powering and Grounding Electronic Equipment
IEEE 142	(2007) Recommended Practice for Grounding of Industrial and Commercial Power Systems - IEEE Green Book

U.S. DEPARTMENT OF DEFENSE (DOD)

MIL-DTL-5624	(2013; Rev V) Turbine Fuel, Aviation, Grades JP-4 and JP-5
MIL-DTL-83133	(2011; Rev H; Am 1 2013) Turbine Fuels, Aviation, Kerosene Type, JP-8 (NATO F-34), NATO F-35 and JP-8 + 100 (NATO F-37)

MANUFACTURERS STANDARDIZATION SOCIETY OF THE VALVE AND FITTINGS INDUSTRY (MSS)

MSS SP-58	(2009) Pipe Hangers and Supports - Materials, Design and Manufacture, Selection, Application, and Installation
MSS SP-69	(2003; Notice 2012) Pipe Hangers and Supports - Selection and Application (ANSI Approved American National Standard)

NACE INTERNATIONAL (NACE)

NACE SP0188	(1999; R 2006) Discontinuity (Holiday) Testing of New Protective Coatings on Conductive Substrates

NATIONAL FIRE PROTECTION ASSOCIATION (NFPA)

NFPA 30	(2012; Errata 2011; Errata 2011) Flammable and Combustible Liquids Code
NFPA 407	(2012; TIA 11-1) Standard for Aircraft Fuel Servicing
NFPA 70	(2014; AMD 1 2013; Errata 2013; AMD 2 2013) National Electrical Code
NFPA 77	(2014) Recommended Practice on Static Electricity
NFPA 780	(2014) Standard for the Installation of Lightning Protection Systems

SOCIETY OF AUTOMOTIVE ENGINEERS INTERNATIONAL (SAE)

SAE AMS3275	(2009; Rev C) Sheet, Acrylonitrile Butadiene (NBR) Rubber and Non-Asbestos Fiber Fuel and Oil Resistant
SAE J514	(2012) Hydraulic Tube Fittings

THE SOCIETY FOR PROTECTIVE COATINGS (SSPC)

SSPC SP 5/NACE No. 1	(2007) White Metal Blast Cleaning

1.3 SUBMITTALS

Government approval is required for submittals with a "G" designation; submittals not having a "G" designation are for Contractor Quality Control approval. Submit the following in accordance with Section 01 33 00 SUBMITTAL PROCEDURES:

SD-01 Preconstruction Submittals

Work Plan; G

SD-02 Shop Drawings

Grounding and Bonding
Pipe Supports

SD-03 Product Data

Flanges; G
Flange Gaskets, Non-Isolating; G
Flange Gaskets, Electrically Isolating; G
Flange Protectors; G
Flange Bolts, Nuts, and Washers; G
Carbon Steel Pipe; G

Stainless Steel Pipe; G
Flexible Pipe Connector; G
Strainers; G
Pressure Gauge; G
Full-Opening Swing Check Valve
Dual-Plate Wafer Check Valve; G
Ball Valve; G
Plug Valve (Double Block and Bleed Type); G
Safety Relief Valves
Thermal Relief Valve; G
Butterfly Valve with Fusible Link Operator; G
Pipe Sleeve Seal; G
Flexible Ball Joint; G

SD-06 Test Reports

Exterior Coating Holiday Test; G
Preliminary Pneumatic Test; G
Final Pneumatic Test; G
Hydrostatic Test; G

SD-07 Certificates

Contractor Qualifications; G
Survey Final Elevations and Location Coordinates; G

SD-08 Manufacturer's Instructions

Flexible Ball Joint; Data Package 2

SD-10 Operation and Maintenance Data

Strainers; Data Package 1
Pressure Gauge; Data Package 1
Dual-Plate Wafer Check Valve; Data Package 2
Full-Opening Swing Check Valve; Data Package 2
Ball Valve; Data Package 2
Plug Valve (Double Block and Bleed Type); Data Package 2
Thermal Relief Valve; Data Package 2
Butterfly Valve with Fusible Link Operator; Data Package 2
Pipe Sleeve Seal; Data Package 1
Flexible Ball Joint; Data Package 2

1.4 QUALITY ASSURANCE

1.4.1 Material and Equipment Qualifications

Provide materials and equipment that are standard products of a manufacturer regularly engaged in the manufacturing of such products, that are of a similar material, design and workmanship. Materials and equipment shall have been in satisfactory commercial or industrial use for a minimum 2 years prior to bid opening. The 2 year period shall include applications of the equipment and materials under similar circumstances and of similar size. Materials and equipment shall have been for sale on the commercial market through advertisements, manufacturers' catalogs, or brochures during the 2 year period.

1.4.2 Contractor Qualifications

Each installation Contractor shall have successfully completed at least 3 projects of the same scope and the same size or larger within the last 6 years. Each installation Contractor shall demonstrate specific installation experience in regard to the specific system installation to be performed. Each installation Contractor shall have taken, if applicable, manufacturer's training courses on the installation of piping and shall meet the licensing requirements in the state. Submit a letter listing prior projects, the date of construction, a point of contact for each prior project, the scope of work of each prior project, and a detailed list of work performed. Provide in the letter evidence of prior manufacturer's training and state licensing.

1.4.3 Work Plan

Submit a comprehensive work plan that provides sufficient detail to demonstrate a thorough understanding of the project. Document that all components to be provided will function together and produce the results expected by the Government. Include any proposed dates for piping system shutdowns as well as the Contractor's ability to complete the work within the allotted shutdown periods. Show proposed dates and nature of piping system operations required of the Government. Include a list of manpower, spare piping and equipment that will be on hand for each phase of the work. Describe, in detail, the means of:

a. Coordinating work with Government and third parties.

b. Preparing for safe piping repair work.

c. Pressure testing new piping sections.

d. Interrupting or isolating an existing fuel service or system.

e. Purging piping.

f. Vapor monitoring.

g. Preparations for containing and disposing of residual fuel.

h. Cutting, sealing, and welding into existing piping systems.

i. Welding tie-ins in place.

j. Examining repair section tie-in welds.

k. Collecting, storing and disposing of waste fuel and oily water generated during work.

1.4.4 Nameplates

Attach nameplates to all specified equipment, thermometers, gauges, and valves defined herein. List on each nameplate the manufacturer's name, address, component type or style, model or serial number, catalog number, capacity or size, and the system that is controlled. Construct plates of stainless steel. Install nameplates in prominent locations with nonferrous screws, nonferrous bolts, or permanent adhesive. Minimum size of nameplates shall be 1 by 2.5 inches. Lettering shall be the normal block style with a minimum 0.25 inch height. Accurately align all

lettering on nameplates. Key the nameplates to a chart and schedule for each system. Frame charts and schedule under glass, and locate where directed near each system. Furnish two copies of each chart and schedule. Each nameplate description shall identify its function.

1.5 DELIVERY, STORAGE, AND HANDLING

Handle, store, and protect equipment and materials to prevent damage before and during installation in accordance with the manufacturer's recommendations, and as approved by the Contracting Officer. Replace damaged or defective items.

1.6 FUEL SUPPLY

Fuel required for the hydrostatic test as specified in this section will be provided and delivered by the Government. Do not test any system with fuel or liquid not intended for final system operation. Fuel used in the system shall remain the property of the Government. Fuel shortages not attributable to normal handling losses shall be reimbursed to the Government.

1.7 DESIGN CONDITIONS

Components to be ASME B16.5, Class 150 (275 psig at 100 degrees F). Components to be suitable for outside, unsheltered location, and function normally in ambient temperatures between 0 and 100 degrees F. Components shall be suitable for use with the product systems for which they are intended to serve. The fuel products include F-24 turbine fuel, JP-5 turbine fuel, and F-76 diesel fuel. The additive products are the fuel system Corrosion Inhibitor/Lubricity Improver (CI/LI) and the Static Dissipater Additive (SDA).

1.7.1 Properties of F-24 Turbine Fuel

The properties of F-24 turbine fuel are specific gravity 0.775 to 0.840 at 60 degrees F and True Vapor pressure of 0.05 psia. The military specification is MIL-DTL-83133.

1.7.2 Properties of JP-5 Turbine Fuel

The properties of JP-5 turbine fuel are specific gravity of 0.788 to 0.845 at 60 degrees F and True Vapor Pressure of 0.004 psia. The military specification is MIL-DTL-5624.

1.7.3 Properties of F-76 Diesel Fuel Marine (DFM)

The properties of F-76 diesel fuel are specific gravity of 0.825 to 0.855 at 60 degrees F and True Vapor pressure of 0.05 psia. The military specification is MIL-F-16884G.

1.7.4 Properties of Fuel System Corrosion Inhibitor/Lubricity Improver (CI/LI)

The properties of CI/LI with a 50/50 dilution conforming to MIL-PRF-25017 are; specific gravity is 0.909 at 60 degrees F, flash point is greater than 88 degree F, and viscosity range of 4.6 cSt at 104 degrees F and 25 cSt at 0 degrees F.

1.7.5 Properties of Fuel System Static Dissipater Additive (SDA)

The properties of SDA known as Stadis 450 are; specific gravity of 0.92 at 60 degrees F, flash point of 42 degrees F, and viscosity range of 7.5 cSt at 100 degrees F and 47 cSt at 0 degrees F.

PART 2 PRODUCTS

2.1 MATERIALS AND EQUIPMENT

Internal parts and components of equipment, piping, piping components, and valves that could be exposed to fuel during system operation shall not be constructed of zinc coated (galvanized) metal, brass, bronze, or other copper bearing alloys. Do not install cast iron bodied valves in piping systems that could be exposed to fuel during system operation.

All items of material and equipment shall be new and of the best quality used for the purpose in commercial practice and shall be products of reputable manufacturers. Each major component of equipment shall have the manufacturer's name, address and catalog number on a plate securely affixed in a conspicuous place. The nameplate of a distributing agent only will not be acceptable. The gears, couplings, projecting set screws, keys and other rotating parts located so that any person may come in close proximity thereto shall be fully enclosed or properly guarded. Equipment, assemblies and parts shall be marked for identification in accordance with MIL-STD-130 and MIL-STD-161. Identification tags made of brass, stainless steel, or engraved anodized aluminum, indicating valve number and normally open (NO) or normally closed (NC) shall be installed on valves. Tags shall be 1 inch by 2 inches (minimum) and shall be fastened to the valve. Marking shall be stamped or engraved. Indentations shall be black, for reading clarity. Arrange tag as required so tag is paralleled to valve body and readable from in front of the valve. Valve identification numbers shall be coordinated with FLC Craney Island prior to installation.

2.1.1 Nitrile Butadiene (Buna-N)

Provide Buna-N material that conforms to SAE AMS3275.

2.1.2 Acrylonitrile Butadiene Rubber (NBR)

Provide NBR material that conforms to SAE AMS3275.

2.2 ELECTRICAL WORK

2.2.1 Grounding and Bonding

Ground and bond in accordance with NFPA 70, NFPA 77, NFPA 407, NFPA 780, API RP 540, API RP 2003, IEEE 142, and IEEE 1100. Provide jumpers to overcome the insulating effects of gaskets, paints, or nonmetallic components.

2.3 FLANGED END CONNECTIONS

2.3.1 Flanges

Provide flanged end connections on equipment, fittings, piping, piping components, adapters, couplers,and valves that conform to ASME B16.5, Class 150.

2.3.1.1 Carbon Steel

Carbon steel flanges shall conform to ASTM A105/A105M.

2.3.1.2 Stainless Steel

Stainless steel flanges shall conform to ASTM A182/A182M, Grade F304 or F304L, forged type.

2.3.1.3 S32205 Stainless Steel Flanges

S32205 flanges shall conform to ASTM A182/A182M.

2.3.2 Flange Gaskets, Non-Isolating

Provide flange gaskets that are 1/8 inch thick and that conform to ASME B16.21, that use a Buna-N binder, and that have a raised-face type unless otherwise indicated. Provide gaskets that are factory cut from one piece of material.

2.3.3 Flange Gaskets, Electrically Isolating

Flange gaskets shall conform to ASTM D229 and shall provide an electrical insulating material of 1000 ohms minimum resistance. Provide gasket material that is chemically compatible with the fuel to be handled. Provide gaskets that are the full face type. Provide flanges that have a full surface 0.03 inch thick, spiral-wound mylar insulating sleeves between the bolts and the holes in the flanges. Bolts may have reduced shanks of a diameter not less than the diameter at the root of the threads. Provide high-strength 1/8 inch thick phenolic insulating washers next to the flanges with flat circular stainless steel washers over the insulating washers and under bolt heads and nuts. Provide bolts long enough to compensate for the insulating gaskets and stainless steel washers.

2.3.4 Flange Protectors

On all piping on piers and in salt spray areas provide flange protectors filled with grease preservative to prevent and control corrosion. Protectors shall protect the bolts, studs, nuts, and gaskets of a flanged end connection from corrosion or damage due to exposure to the environment. Protectors shall be weather and ultraviolet (UV) resistant. Protectors shall allow for quick and easy removal and re-installation by maintenance personnel. Provide protectors that allow visual inspection of the flange gasket without requiring removal. For electrically isolating flange connections, provide protectors with corrosion inhibitor grease fittings that allow the injection of grease into the flange cavity.

2.3.5 Flange Bolts, Nuts, and Washers

Bolts and nuts for pipe flanges, flanged fittings, valves and accessories shall conform to ASME B18.2.1 and ASME B18.2.2, except as otherwise specified. Bolts shall be of sufficient length to obtain full bearing on the nuts and shall project no more than two full threads beyond the nuts with the bolts tightened to the required torque. Bolts shall be regular hexagonal bolts conforming to ASME B18.2.1 with material conforming to ASTM A193/A193M, Class 2, Grade B8, stainless steel, when connections are made where a stainless steel flange is involved, and Grade B7 when only carbon steel flanges are involved. Bolts shall be threaded in accordance

with ASME B1.1, Class 2A fit, Coarse Thread Series, for sizes 1 inch and smaller and Eight-Pitch Thread Series for sizes larger than 1 inch. Nuts shall conform to ASME B18.2.2, hexagonal, heavy series with material conforming to ASTM A194/A194M, Grade 8, stainless steel for stainless steel bolts, and Grade 7 for carbon steel bolts. Nuts shall be threaded in accordance with ASME B1.1, Class 2B fit, Coarse Thread Series for sizes 1 inch and smaller and Eight-Pitch Thread Series for sizes larger than 1 inch. Provide washers under bolt heads and nuts. Washers to be ASTM F436, flat circular stainless steel for stainless steel bolts, and carbon steel for carbon steel bolts. Torque wrenches shall be used to tighten all flange bolts to the torque recommended by the gasket manufacturer. Tightening pattern shall be as recommended by the gasket manufacturer. Anti-seize compound shall be used on stainless steel bolts.

2.4 PIPE

Provide pipe that meets the material, fabrication and operating requirements of ASME B31.3, except as modified herein.

2.4.1 Carbon Steel Pipe

Provide carbon steel pipe that complies with one of the following. Pipe 2-1/2 inches and larger shall be Schedule 40. Pipe smaller than 2-1/2 inches shall be Schedule 80.

a. Conform to ASTM A53/A53M, Type S Grade B.

b. Conform to API Spec 5L, Product Specification Level (PSL) 1, Grade B, seamless or electric welded.

2.4.1.1 Fittings and End Connections

End connections for pipe or fittings smaller than 2-1/2 inches shall be forged, socket weld type conforming to ASTM A182/A182M and ASME B16.11, unless indicated otherwise. End connections for pipe or fittings 2-1/2 inches and larger shall be buttweld type conforming to ASTM A234/A234M, Grade WPB and ASME B16.9 of the same wall thickness as the adjoining pipe. Where threaded end connections are indicated, provide connections that conform to ASME B16.3, Class 150 or ASME B16.11.

2.4.2 Stainless Steel Pipe, Additive Systems

Provide stainless steel pipe that complies with one of the following.

a. Conform to ASTM A312/A312M, Type TP304L, seamless only. Pipe smaller than 8 inches shall be Schedule 40S.

b. Conform to ASTM A358/A358M, Grade 304L, Class 1 or 3, longitudinally welded. Radiographically inspect 100 percent of factory longitudinal welds in accordance with ASME BPVC SEC VIII D1. Minimum pipe wall thickness shall be 0.25 inch for pipe 12 inches and smaller.

2.4.2.1 Fittings 2-1/2 in and Larger

Provide buttwelded type fittings that complies with one of the following.

a. Stainless steel conforming to ASTM A403/A403M, Class WP-S, Grade WP 304L, seamless only and ASME B16.9 of the same thickness as the adjoining pipe.

b. Stainless steel conforming to ASTM A403/A403M, Class WP-XX, Grade WP 304L, of wall thickness as indicated. Do not fabricate starting material by the fusion welding process without addition of filler metal. Forming will not be allowed using fusion welding process without addition of filler metal. Radiographically inspect all factory longitudinal welds in accordance with ASME BPVC SEC VIII D1.

2.4.2.2 Fittings 2 in and Smaller

Socket welded type fittings, unless indicated otherwise, shall conform to ASME B16.11. Fitting materials shall be stainless steel that conforms to ASTM A182/A182M, Type F304L.

2.4.2.3 Control Tubing Fittings

Flareless, Type 316 stainless steel type conforming to SAE J514.

2.4.3 Control Tubing

Seamless, fully annealed stainless steel tubing conforming to ASTM A269, Grade TP316, with a Rockwell hardness of B80 or less. For 1/2 inch tubing, provide a minimum 0.049 inches tubing wall thickness.

2.4.4 S32205 Stainless Steel Pipe - (Fuel Piping Within Trenches at Base of Piers)

Provide S32205 stainless steel pipe longitudinally welded that conforms to ASTM A790/A790M-07 for all piping located within road crossing pipe trenches located near the base of piers and as indicated on drawings. Radiographically inspect 100 percent of factory longitudinal welds in accordance with ASME BPVC SEC VIII D1. Minimum pipe wall thickness shall be 0.188 inches for all pipe larger than 12-inches; and schedule 40S for pipe 12 inches and smaller.

2.4.4.1 Fittings 2-1/2 Inch and Larger

Provide buttwelded S32205 type fittings that comply with ASTM A815/A815M, Class WP-WX, grade WPS32205, of the same thickness as the adjoining pipe. Radiographically inspect all factory longitudinal welds in accordance with ASME BPVC SEC VIII D1.

2.5 PIPING COMPONENTS

Provide piping components that meet the material, fabrication and operating requirements of ASME B31.3, except as modified herein. Pressure design class for piping components shall be Class 150 as defined in ASME B16.5.

2.5.1 Welded Nipples

Conform to ASTM A733 or ASTM B687 and be constructed of the same material as the connecting pipe.

2.5.2 Steel Couplings

Conform to API Spec 5L, seamless, extra heavy, wrought steel with recessed ends.

2.5.3 Threaded Unions

Unions shall conform to ASME B16.39, Class 150. Unions materials shall conform to ASTM A312/A312M, Grade 304 or 316.

2.5.3.1 Dielectric Type

Dielectric unions shall conform to dimensional, strength, and pressure requirements of ASME B16.39, Class 150. Steel parts shall be galvanized or plated. Union shall have a water-impervious insulation barrier capable of limiting galvanic current to one percent of the short-circuit current in a corresponding bimetallic joint. When dry, union shall be able to withstand a 600-volt breakdown test.

2.5.4 Joint Compound

Resistant to water and suitable for use with fuel containing 40 percent aromatics.

2.5.5 Flexible Pipe Connector

Connector shall be the flexible, close pitch, metal hose type that is constructed with exterior annular corrugations and provided with a single layer of braided wire sheath covering. Connectors shall be constructed entirely of stainless steel and be rated for the system working pressure and temperature. Connectors shall have flanged end connections.

2.5.6 Flexible Ball Joint

The carbon steel type with chromium plated steel balls capable of 360 degree rotation plus 15 degree angular flex movement. Provide joints with flanged end connections and pressure molded composition gaskets designed for continuous operation at operating conditions.

2.5.7 Strainers

The in-line, cleanable, fabricated basket type designed and constructed in accordance with ASME B31.3 and ASME B31.4. Strainer body shall be fabricated of carbon steel to match the piping system. Strainer body shall include a body cavity drain connection. Install a strainer drain line that is inclusive of pipe nipples, a ball valve for shutoff, and a cap. Strainer shall be equipped with a removable cover, flanged end connections, an air eliminator, differential pressure ports, and arrows clearly cast on the strainer sides that indicate the direction of flow. Strainers baskets shall have a removable, 80 mesh (Aviation Fuel) or 40 mesh (F-76), Type 304 stainless steel sediment screen. The ratio of net effective strainer area to the area of the connecting pipe shall be not less than 3 to 1. The pressure drop for a clean strainer shall not exceed 3 psid at design flow rates.

2.5.7.1 Differential Pressure Transmitter

The strainer shall be equipped with a differential pressure indicating transmitter that shall be a two-wire microprocessor-based transmitter utilizing a solid-state, silicon pressure sensor. The transmitter accuracy shall be plus or minus 20 percent of calibrated span including combined effects of linearity, hysteresis and repeatability. The transmitter may be more accurate. Transmitter shall not require recalibration due to power outages. Differential pressure ranges shall be

selected as necessary to operate in conjunction with the connected system's operating pressures. Connection to the pipe shall be made on the side of the pipe (90 degrees from the top).

a. Transmitter output shall be a 4-20 mA dc, linear signal between 0-100 percent of the input. It simultaneously will produce a digital HART output signal.

b. Transmitter body shall be stainless steel with stainless steel isolating diaphragms and silicone oil fill. Transmitter connecting drain and vent valves shall be of stainless steel construction.

c. Transmitter shall be provided with a 4-1/2 or 5 digit, digital LCD display capable of being read in low/no light conditions. Indicator scale shall be in pounds per square inch differential for positive pressure ranges.

d. Transmitters shall be UL or FM listed. Transmitter enclosure shall be rated for an explosion-proof environment in accordance with NFPA 70 for Class I, Division I, Group D locations.

e. Transmitter shall be supplied with a factory assembled five-valve, 316 stainless steel manifold with 1/2-inch FNPT process, instrument, and vent connections. Vent valves shall be furnished on upper ports of transmitter. The valves shall have a delrin seat and Viton O-ring bonnet packing. Provide the manifold with a mounting kit. Provide a stainless steel plug in the vent connections.

2.5.7.2 Differential Pressure Gauge

Gauge shall be the direct-reading, piston type. Piston shall be spring-supported, corrosion resistant and shall travel vertically inside a glass cylinder. Gauge's scale shall be between 0 to 30 psi and shall have an accuracy of plus or minus 0.5 psi. Gauge's scale shall have 1 psi graduations. Gauge's maximum piston travel shall be 3 inches. Gauge shall be rated for an operating pressure of 300 psi in either direction. Glass cylinder shall have stainless steel end flanges with Viton 0-ring seals. Gauge's high pressure inlet shall have a 10 micron pleated paper filter. Provide a fine mesh stainless steel strainer on the gauge's low pressure inlet connection. Gauge's high and low pressure connections shall be 1/4 inch NPT female with a stainless steel bar stock valve at each connection. Under a differential pressure of 30 psi, leakage past the piston shall not exceed 120 drops per minute. Construction of the gauge shall be such that a 3-valve manifold is not necessary.

2.5.8 Pressure Gauge

Gauge shall be the single style type that conform to ASME B40.100. Gauge shall have a 4-1/2 inches dial, a stainless steel case and tube, a stainless steel ball valve, pressure snubbers, and a scale range as indicated. Gauge shall be liquid-filled with glycerin or silicone.

2.5.9 Pipe Supports

Supports shall conform to MSS SP-58 and MSS SP-69, except as modified herein. Provide hot-dipped galvanized finish on rods, nuts, bolts, washers, and supports. Provide Type 316 stainless steel nuts, bolts, washers, and screws when located under a pier. Provide miscellaneous metal that conforms to ASTM A36/A36M, standard mill finished structural

steel shapes, hot-dipped galvanized.

2.5.9.1 Low Friction Supports

Supports shall have self-lubricating anti-friction bearing elements composed of 100 percent virgin tetrafluoroethylene polymer and reinforcing aggregates, prebonded to appropriate backing steel members. The coefficient of static friction between bearing elements shall be 0.06 from initial installation for both vertical and horizontal loads and deformation shall not exceed 0.002 inch under allowable static loads. Bonds between material and steel shall be heat cured, high temperature epoxy. Design pipe hangers and support elements for the loads applied. Provide anti-friction material with a minimum of 0.09 inch thick. Provide hot-dipped galvanized steel supports. Provide supports that are factory designed and manufactured.

2.5.10 Sight Flow Indicator

Construct indicator of carbon steel and provide with flanged end connections. Indicator shall include an internal rotating propeller to provide visual flow indication. Indicator housing shall include a tempered glass observation port for viewing the rotating propeller. Indicator shall have Buna-N seals.

2.5.11 Spectacle Blinds

Spectacle blinds shall be a combination of a blind and ring spacer, designed in accordance with ASME B31.3, and fabricated as a single unit. Adjoining bar(s) shall provide means for straddling a flange bolt, allowing the bolt to support the spectacle blind during change. The spectacle blind shall be constructed of carbon steel and shall be electroless nickel plated. Surfacing shall be serrated machine finished. The spectacle blind shall be fabricated to be installed between ASME B16.5 raised face flanges of the class indicated on the drawings.

2.6 GENERAL VALVES

Provide valves that meet the material, fabrication and operating requirements of ASME B31.3, except as modified herein. Valves shall have flanged end connections and conform to ASME B16.34, Class 150 except as modified herein. Provide stainless steel stem and trim for each valve. Valves shall have a weatherproof housing. Seats, body seals, and stem seals shall be Viton or Buna-N.

a. Valves Connected to Stainless Steel. Provide valves with bodies, bonnets, and covers constructed of stainless steel conforming to ASTM A743/A743M, Type 304 or 316; or cast steel conforming to ASTM A216/A216M, Grade WCB internally plated with nickel or internally electroless nickel plated; or ductile iron conforming ASTM A536, electroless nickel plated.

b. Valves Connected to Carbon Steel Piping (No Internal Coating). Provide valves with bodies, bonnets, and covers constructed of cast steel conforming to ASTM A216/A216M.

2.6.1 Full-Opening Swing Check Valve

The full-opening, tilting disc, non-slam, swing type that conforms to API Spec 6D. Discs and seating rings shall be renewable without removing

from the line. The disc shall be guided and controlled to contact the entire seating surface.

2.6.2 Dual-Plate Wafer Check Valve

The dual-plate, wafer type that conforms to API Std 594, Type A. Wafer type check valves may be provided in lieu of swing check valves in piping sizes larger than 4 inches. Valve disc shall be constructed of ASTM A351/A351M, Grade CF8M stainless steel. Valve spring, hinge pin, stop pin, and radial-thrust bearing materials shall be constructed of Type 316 stainless steel.

2.6.3 Ball Valve

The non-lubricated, double seated, ball type that conforms to API Spec 6D. Valve shall meet the fire test requirements of API Spec 607. Valve shall operate from fully open to fully closed with 90 degree rotation of the ball. Valve shall be capable of 2-way shutoff. Valve ball and stem shall be constructed of stainless steel. Valves smaller than 2 inches shall have one piece bodies and shall have a minimum bore not less than 55 percent of the internal cross sectional area of a pipe of the same nominal diameter. Balls shall be provided with trunnion type support bearings for valves 12 inches and larger. Provide valves with worm gear operators, except valves 6 inches and smaller may be lever operated with a minimum 10 adjustable positions between fully opened and fully closed.

2.6.4 Plug Valve (Double Block and Bleed Type)

The non-lubricated, resilient, double seated, trunnion mounted type with a tapered lift plug capable of 2-way shutoff that conforms to API Spec 6D. Valve shall have electroplated nickel interiors. Valve plug shall be constructed of steel or ductile iron with electroplated nickel that is supported on upper and lower trunnions. Valve sealing slips shall be constructed of steel or ductile iron with Viton seals. Valve design shall permit sealing slips to be replaced from the bottom with the valve mounted in the piping. Minimum bore size shall be 65 percent of the internal cross sectional area of a pipe of the same nominal diameter, unless the manufacturer can show an equivalent or greater flow rate with a lower percent internal cross sectional area. Valves 6 inches and larger shall have removable lower and bonnet (upper) bushing. Valve shall have weatherproof, worm gear operators with mechanical position indicators. Indicator flag and shaft shall be made of steel. For valves installed in loop or distribution piping, provide valve body with a body cavity drain connection. Install a valve drain line that is inclusive of pipe nipples, a ball valve for shutoff, and a cap. For plug valve motor operators where indicated on drawings see Automated Fuel Handling Equipment (AFHE) General Specifications AUTO-D-GEN-GSPC-01-2.3.

2.6.4.1 Valve Operation

Valve shall operate from fully open to fully closed by rotation of the handwheel to lift and turn the plug. Rotation of the plug toward open shall lift the plug without wiping the seals and retract the sealing slips so that clearance is maintained between sealing slips and valve body. Rotation of the handwheel toward closed shall lower the plug after sealing slips are aligned with the valve body and force the sealing slips against the valve body for positive closure. When valve is closed, slips shall form a secondary fire-safe metal to metal seat on both sides of the resilient seal.

2.6.4.2 Pressure/Thermal Relief

Provide plug valve with an automatic pressure/thermal relief valve(s) to relieve pressure buildup in the internal body cavity when the plug valve is closed. Relief valve shall open at a 25 psi differential pressure, and discharge to the throat of and to the upstream side of the plug valve. Where indicated on drawings, provide plug valve with a balanced type line relief system to relieve pressure build-up across the valve ports. Relief pressure setting shall be as indicated on drawings.

2.6.4.3 Bleed Valve

Provide a manually operated bleed valve for each plug valve in order to verify that the plug valve is not leaking when in the closed position. Provide discharge piping so that released liquid from each bleed valve can be contained.

2.6.4.4 Limit Switches

The day tank bypass valve shall be provided with a factory-installed limit switch that is actuated by the valve opening. The switch shall have one single pole double throw contact and shall be watertight and U.L. listed for Class I, Division 1, Group D hazardous areas.

2.6.4.5 Motor Valve Operators

The motorized valve operators shall be suitable for use on nominal voltage 3 phase electrical power systems. The valve operator shall integrate in a single unit the motor, integral reversing starter with motor protection, local control facilities, terminals for remote power and control system connections, gearbox, drive shaft with drive bushing, valve position indicator, and hand operating facilities.

The actuator shall be sized to guarantee valve opening or closure at maximum differential pressure of 275 psid upstream to downstream line pressure differential, with corresponding 275 psig upstream and 0 psig downstream pressures. Valves shall have a maximum operating speed of 120 seconds. The safety margin shall be such that the operator shall develop torque required for seating or unseating the valve with the supply voltage at 10 percent below nominal.

Actuators shall be waterproof and suitable for outdoor use. In special situations, it may be necessary for the actuators to be fully submersible.

Access for operations and maintenance of the valve and actuator shall be provided.

2.6.4.5.1 Electrical

The actuator enclosure shall be certified for use in hazardous areas rated for Class I, Division 1 and 2, Group D applications.

The electric motor shall have Class F insulation with a full torque rating of at least 15 minutes at 40 deg C, or twice the stroking time of the valve, whichever is longer.

The reversing starter, control transformer and local controls shall be integrated with the motor in the actuator housing to prevent breathing and

condensation. The starter shall be rated for maximum of 60 starts per hour and be appropriately sized for the motor size.

The minimum motor protection shall consist of:

a. Winding temperature monitoring and shutdown.

b. Stall detection and shutdown.

c. Lost phase protection.

d. Over torque.

e. Limit switches set points.

The actuator shall include a mechanism to ensure that the motor runs with connect rotation for the required direction of valve travel irrespective of the phase sequence of the power supply connections.

2.6.4.5.2 Mechanical

The actuator gearing shall be totally enclosed in an oil filled gear case suitable for operation at any angle. All gearing and drive components must be of metallic construction.

A hand wheel shall be provided for manual operation. The hand wheel shall only be engaged when a manually operated clutch is engaged. With this action the motor of the operator is disengaged from the actuator drive. The hand wheel gearing must be mechanically independent from the motor drive to permit emergency operation of the valve. Clockwise operation of the wheel shall result in closing of the valve.

The actuator shall be furnished with drive bushing or shaft connector that shall suit the valve stem for connecting the actuator output shaft to the valve.

2.6.4.5.3 Control

Local control pushbuttons shall be provided on the actuator assembly for close, open, and stop functions along with a Local/Stop/Remote selector switch. The local remote selector switch shall be lockable in any of the three positions.

The valve actuator shall have the capability to be connected into the control system with control signals I/O hard wired or via control loop communications.

The setting of torques level, position limits, and configuration of the indication contacts shall be carried out without the need to remove the actuator cover to maintain the integrity of the enclosure.

2.6.4.5.4 Remote Hand Stations

Remote hand stations may be installed in conjunction with valve actuators to facilitate operation of the valve from a more convenient location than the actual location of the Motor Operated Valve (MOV). Installed remote hand stations shall be compatible with the valve actuator manufacturer.

2.6.4.5.5 Precedence

Commands from valve actuators shall take precedence over commands from remote hand stations. Valve actuator Local/Off/Remote (LOR) switch shall have to be in the "Remote" position while the remote hand station LOR switch is in "Local" for commands from the remote hand station to control the valve actuator. Remote hand stations shall be kept in the "Remote" position for commands from the MMI to control the valve actuator. Valve actuators in the "Local" position shall only be commanded from the valve actuator.

2.6.4.5.6 Location

Remote hand stations shall be installed as needed based on safety and human engineering requirements; all other remote hand stations to be installed will be determined during site surveys and design efforts. The locations for installing remote hand stations shall be coordinated with the site fuels operations personnel. Valve actuators located in confined "Gas Free" spaces shall have remote hand stations located outside the confined "Gas Free" space. Also, valve actuators located in difficult to access areas shall be considered for remote hand stations. These areas include, but are not limited to: MOVs that cannot be easily accessed, MOVs located under grating, MOVs located higher than 4.5 feet, and MOVs located in covered valve pits.

2.6.4.5.7 Miscellaneous

The actuators shall be permanently and properly marked with a nameplate that as a minimum indicates the Model number, serial number, operating voltage, enclosure rating/classification, and tag number.

Each actuator shall have been factory tested prior to shipment to the field and a test certificate shall be submitted by the supplier as part of the documentation supply package, which in addition shall include installation manual, and electrical wiring diagrams.

All actuating equipment shall be installed with strict observance of manufacturer's specifications and recommendations.

SPAWAR Approved Equipment Vendor List		
DESCRIPTION	MANUFACTURER	MODEL OR SERIES
Motor Valve Operator	Limitorque	MX Series

2.6.5 SAFETY RELIEF VALVES

Safety relief valves shall be fully enclosed, spring loaded, angle pattern, single port, hydraulically operated type with plan caps. Valves shall meet the requirements of ASME BPVC SEC VIII D1 and API Std 526. Valve stems shall be fully guided between the closed and fully opened positions. Valve seats shall provide a double seal with a metal-to-metal seat in addition to an o-ring soft seat. End connections shall be ASME B16.5, 150 lb class raised face flanges.

2.6.5.1 Materials of Construction

Valve bodies and bonnets shall be ASTM A217/A217M, Grade WCC carbon steel

unless otherwise noted. Trim and internals shall be 316 stainless steel. O-ring soft seat shall be Viton. SRV-8 value body and bonnet shall be 316 stainless steel.

2.6.5.2 Specific Requirements

Valve manufacturer shall verify sizing of the valve provided in accordance with API Std 520 and the design conditions. Sizing shall include 10 percent overpressure at the given relief flow. Initial sizes and design conditions are given in the following table.

Valve Number	Set Pressure (psi)	Relief Flow (gpm)	Inlet/Outlet Size (Nominal)	API Orifice Size
SRV-1	100	200	3" x 4"	K
SRV-2	100	200	3" x 4"	K
SRV-7	40	200	3" x 4"	K
SRV-8	20	25	1-1/2" x 2"	F
SRV-9	40	250	3" x 4"	K

2.6.6 Thermal Relief Valve

Relief valves shall be the fully enclosed, spring loaded, angle pattern, single port, hydraulically operated type with plain caps, and shall be labeled in accordance with ASME BPVC SEC VIII D1. Valve stems shall be fully guided between the closed and fully opened positions. The valves shall be factory-set to open at the set pressure indicated on the drawings. Operating pressure shall be adjustable by means of an enclosed adjusting screw. The valves shall have a minimum capacity of 20 gpm at 10 percent overpressure and shall operate at rated capacity with a back pressure not exceeding 50 psi. Valves shall have a replaceable soft seat. Valve connections shall be 1-inch ASME B16.5, raised face flanged, of Class indicated on the drawings, unless noted otherwise.

2.6.6.1 Balanced Type Thermal Relief Valves

Where indicated on the drawings, provide thermal relief valves of the balanced design. Balanced thermal relief valves shall relieve the main piping segments at the set point pressure regardless of the backpressure on the relief valve outlet.

2.6.7 Butterfly Valve with Fusible Link Operator

Valve shall conform to API Std 609. Valve shall meet the fire test requirements of API Std 607. Valve shall be designed for bubbletight bidirectional shutoff service at operating conditions. Disc shall be Type 304L or Type 316, stainless steel. Stem shall be ASTM A276 Type 416 or ASTM A564/A564M Type 630 stainless steel. Seal ring shall be Teflon with metal backup. Stem seals shall be capable of withstanding the rated pressure and temperature of the valve seat. Provide valves 6 inches and larger and valves at pump discharge with weatherproof gear operators with handwheel; other valves shall have minimum 10 position throttling handles. Valve shall have a fusible link type valve operator. The fusible link and spring assembly shall close the valve automatically when the link material melts at 165 degrees F and lock the valve in the closed position. Spring assembly shall be fully enclosed to ensure safety. Provide valve with flanged end connections independent of other flanged end connections provided on items such as equipment, piping, piping

components, or valves.

2.7 CONTROL VALVES, HYDRAULICALLY OPERATED

Provide valves in accordance with Section 33 52 43.14 CONTROL VALVES, FUEL SYSTEMS.

2.8 ACCESSORIES

2.8.1 Concrete Anchor Bolts

Concrete anchors shall conform to ASTM A307, Grade C, hot-dipped galvanized.

2.8.2 Coatings for Bolts, Studs, Nuts, and Washers

Carbon steel bolts, studs, nuts, and washers shall be provided with a factory applied cadmium coating that conforms to ASTM B696 or ASTM B766.

2.8.3 Polytetrafluoroethylene (PTFE) Tape

Tape shall conform to ASTM D3308.

2.8.4 Pipe Sleeves

Provided sleeves constructed of uncoated carbon steel pipe conforming to ASTM A53/A53M, Standard weight.

2.8.5 Pipe Sleeve Seal

Provide fire rated, modular nitrile rubber sealing elements to seal between pipe and sleeve where indicated. Use one seal at each end of the sleeve through walls to keep the pipe in proper alignment.

2.8.6 Boot Seal

Boot seals shall be seamless pull on type with flexibility to allow expansion and contraction of piping. Boot seals shall be Buna-N and provided with 1/2 inch stainless steel band clamps.

2.8.7 Buried Utility Tape

Provide detectable aluminum foil plastic-backed tape or detectable magnetic plastic tape for warning and identification of buried piping. Tape shall be detectable by an electronic detection instrument. Provide tape in minimum 3 inches width rolls, color coded for the utility involved, with warning identification imprinted in bold black letters continuously and repeatedly over entire tape length. Warning identification shall be at least 1 inch high and shall state as a minimum "BURIED JET FUEL PIPING BELOW". Provide permanent code and letter coloring that is unaffected by moisture and other substances contained in trench backfill material.

2.9 FINISHES

2.9.1 Factory Coating

2.9.1.1 Valves

Valve surfaces shall be blasted clean according to SSPC SP 5/NACE No. 1. Valve surfaces shall be primed and coated in accordance with Section 09 97 13.27 EXTERIOR COATING OF STEEL STRUCTURES.

2.9.1.2 Equipment and Components

Unless otherwise specified, provide equipment and components fabricated from ferrous metal with the manufacturer's standard factory finish. Each factory finish shall withstand 500 hours exposure to the salt spray test specified in ASTM B117. For test acceptance, the test specimen shall show no signs of blistering, wrinkling, cracking, or loss of adhesion and no sign of rust creepage beyond 1/8 inch on either side of the scratch mark immediately after completion of the test. For equipment and component surfaces subject to temperatures above 120 degrees F, the factory coating shall be appropriately designed for the temperature service.

2.9.2 Field Painting

Painting required for surfaces not otherwise specified shall be field painted as specified in Section 09 97 13.27 EXTERIOR COATING OF STEEL STRUCTURES. Do not paint stainless steel surfaces. Do not coat equipment or components provided with a complete factory coating. Prior to any field painting, clean surfaces to remove dust, dirt, rust, oil, and grease.

PART 3 EXECUTION

3.1 INSTALLATION

Installation, workmanship, fabrication, assembly, erection, examination, inspection, and testing shall be in accordance with ASME B31.3 and NFPA 30, except as modified herein. Safety rules as specified in NFPA 30 and NFPA 407 shall be strictly observed. Never direct bury threaded connections, socket welded connections, unions, flanges, valves, air vents, or drains. Install all work so that parts requiring periodic inspection, operation, maintenance, and repair are readily accessible.

3.1.1 Piping

3.1.1.1 Threaded End Connections

Provide threaded end connections only on piping 2 inches in nominal size or smaller and only where indicated on the drawings. Provide threaded connections with PTFE tape or equivalent thread-joint compound applied to the male threads only. Not more than three threads shall show after the joint is tighten.

3.1.1.2 Existing Piping Systems

No interruptions or isolation of an existing fuel handling service or system shall be performed unless the actions are appropriately documented in the approved work plan. Perform initial cutting of existing fuel pipe with a multiwheel pipe cutter, using a nonflammable lubricant. After cut is made, seal interior of piping with a gas barrier plug. Purge interior

of piping with carbon dioxide or nitrogen prior to performing any welding process.

3.1.2 Bolted Connections

For each bolted connection of stainless steel components (e.g., pipes, piping components, valves, and equipment) use stainless steel bolts or studs, nuts, and washers. For each bolted connection of carbon steel components, use carbon steel bolts or studs, nuts, and washers. Extend bolts, or studs, no less than two full threads beyond their corresponding nut when tightened to the required torque. Prior to installing nuts, apply a compatible anti-seize compound to the male threads.

3.1.3 Flanges and Unions

Except where threaded end connections and/or unions are indicated, provide flanged joints in each line immediately preceding the connection to a piece of equipment or material requiring maintenance such as pumps, general valves, control valves, strainers, and other similar items and as indicated. Assemble flanged joints square and tight with matched flanges, gaskets, and bolts.

3.1.4 Flange Protectors

Provide flange protectors on each electrically isolating flange connection. Fill the flange cavity of electrically isolating flange connections with a corrosion inhibitor type grease.

3.1.5 General Valves

Install isolation plug or ball valves on each side of each piece of equipment, at the midpoint of looped mains, and at any other points indicated or required for draining, isolating, or sectionalizing purpose. Install valves with stems vertically up unless otherwise indicated. Provide individual supports and anchors for each valve.

3.1.6 Air Vents

Provide 2 inch air vents at all high points and where indicated to ensure adequate venting of the piping system.

3.1.7 Differential Pressure Gauge

Install gauge such that high pressure is applied to the top of the gauge piston.

3.1.8 Sight Flow Indicator

Mount indicator rolled one bolt hole to prevent freeze damage from rainwater accumulation on viewing window.

3.1.9 Drains

Provide drains at all low points and where indicated to ensure complete drainage of the piping. Drains shall be accessible, and shall consist of nipples and caps or plugged tees unless otherwise indicated.

3.1.10 Seismic Requirements

Support and brace piping and attach valves to resist seismic loads as specified under Sections 13 48 00.00 10 SEISMIC PROTECTION FOR MECHANICAL EQUIPMENT and as shown on the drawings. Structural steel required for reinforcement to properly support piping, headers, and equipment but not shown shall be provided under this section. Material used for support shall be as specified under Section 05 12 00 STRUCTURAL STEEL.

3.1.11 Structural Attachments

Provide attachment to building structure concrete and masonry by cast-in concrete inserts, built-in anchors, or masonry anchor devices. Apply inserts and anchors with a safety factor not less than 5. Do not attach supports to metal decking. Construct masonry anchors for overhead applications of ferrous materials only. Structural steel brackets required to support piping, headers, and equipment, but not shown, shall be provided under this section. Material used for support shall be as specified under Section 05 12 00 STRUCTURAL STEEL.

3.1.12 Pipe Sleeves

Provide pipe sleeves at any point where a pipe penetrates a concrete wall orfloor. Do not install sleeves in structural members except where indicated or approved. Extend each sleeve through its respective wall or floor a minimum of 6-inches. Install pipe sleeves in concrete structures at the time of the construction. Sleeves shall be of such size as to provide a minimum of 2-inch all-around clearance between bare pipe and sleeves. Sleeves shall be standard weight carbon steel pipe.

3.2 VERIFICATION OF DIMENSIONS

After becoming familiar with details of the work, verify dimensions in the field, and advise the Contracting Officer of any discrepancy before performing any work.

3.3 CLEANING OF PIPING

Keep the interior and ends of all new piping, affected by construction operations, thoroughly cleaned of foreign matter and water before and after being installed. Piping systems shall be kept clean during installation by means of plugs or other approved methods. When work is not in progress, open ends of piping and fittings shall be closed so that no water or other foreign substance will enter the pipes or fittings. Piping shall be inspected before placing into position. The interior of each length of pipe shall be cleaned after welding ensuring that the interior of the piping is free of foreign matter when it is connected into the system.

3.4 TRENCHING AND BACKFILLING

Trenching and backfilling shall conform to Section 31 23 00.00 20 EXCAVATION AND FILL.

3.5 PIPING LAYOUT REQUIREMENTS

3.5.1 Pipe Fabrication

Fabricate piping to measurements established on the project site and

position into place without springing or forcing. Make provisions for absorbing expansion and contraction without undue stress in any part of the system.

3.5.2 Interference and Measurements

Provide offsets, fittings, and accessories required to eliminate interferences and to match actual equipment connection locations and arrangements. Verify measurements before commencing work. Submit discrepancies for clarification before proceeding with the installations to the Contracting Officer.

3.5.3 Space And Access

Keep piping and control tubing, which is not detailed, close to structures and columns so as to take up a minimum amount of spaces. Ensure that access is provided for maintenance of equipment, valves and gauges.

3.5.4 Location

Do not place unions in locations that will be inaccessible after the completion of the work.

3.5.5 Piping and Equipment

Provide anchors where required to absorb or transmit thrust or eliminate vibration or pulsation. Provide supports near each change of direction. Select support components which do not restrict the movement of the pipe due to thermal expansion. Space supports uniformly and arrange symmetrically.

3.5.6 Structural Support

Provide supplementary or intermediate steel or other structural members as required for transmission of loads to members forming part of the supporting structure.

3.5.7 Grade and Location Survey

Where profiles or direction of slope of piping are shown on the drawings, grade the line uniformly between changes in slope or direction. Maintain gradient to within plus or minus 1/8-inch over the entire length of pipe. When backfilling has been completed to the top of the pipe, the pipe shall be surveyed at each joint, and logged by station number. Submit to the Contracting Officer for approval the survey final elevations and location coordinates in CADD format before backfilling can continue.

3.5.8 Size Changes

Make changes in pipe size with reducing fittings. Do not use bushings. In lieu of welding reducing outlet tees for piping 2 inches and larger, welding branches suitable for 100 percent radiographic inspection may be used. Do not use weldolets unless specifically called out (labeled) on the drawings.

3.5.9 Direction Changes

Make changes in direction of pipes with long radius fittings. Provide special fittings when required. Do not make miter welds. Make odd-angle

offsets with pipe bends or elbows cut to the proper angle.

3.6 WELDING

All joints, unless indicated otherwise, in carbon steel and stainless steel piping systems shall be welded. Welding and inspection of fuel pipe joints shall comply with Section 33 52 90.00 20 WELDING FOR POL SERVICE PIPING.

3.7 INSTALLATION OF UNDERGROUND PIPING

3.7.1 Precautions

Take special care to ensure that the protective coating on buried pipe is not damaged during installation and that the completed system is free of rocks, sand, dirt, water, weld slag, and foreign objects including construction debris. Take the following steps to ensure these conditions.

a. Coated pipe shall be handled only with canvas or nylon slings or padded clamps. Any coating damaged by improper handling or storage shall be repaired as specified.

b. Pipe brought to the site shall be stored on blocks or horses at least 18 inches above the ground and adequately supported to prevent sagging. Padded blocks or horses shall be used for coated pipe. The method and height of storing coated pipe shall be in accordance with the coating manufacturer's instructions. Pipe ends shall be protected and capped against weather at all times, except to accommodate immediate installation.

c. Visual inspection shall be made of the inside of each length of pipe to ensure that it is clear and clean prior to installation.

d. The open ends of the pipe system shall be closed at the end of each day's work or when work is not in progress by use of expansion plugs and shall not be opened until the work is resumed.

e. A swab, with a leather or canvas belt disc to fit the inside diameter of pipe, shall be pulled through each length of pipe after welding in place.

f. Obstruction remaining in the pipe after completion of the system shall be removed at the expense of the Contractor.

g. Plasma cutters and torches are not to be used to make penetrations in the pipe or to cut pipe.

3.7.2 Pipe Assembly

Pipe shall be strung parallel and adjacent to or above a trench. The pipe shall be supported on padded skids during welding and inspection of joints. Protective coating shall be inspected and repaired prior to lowering the pipe into the trench. The pipe shall be lowered using only canvas or nylon slings. The sling shall be dug from underneath the pipe after placements and shall not be pulled from underneath the pipe while in contact with it. Care shall be taken to prevent damage to the pipe, welded joints or coating and any such damage shall be repaired as directed by the Contracting Officer. Pressure testing of the pipe shall be done after it has been placed in final position in the trench.

3.7.3 Warning Tapes in Earth Trenches

For the purpose of early warning and identification of buried pipes outside of building walls during future trenching or other excavation, continuous identification tapes shall be provided in the trench. Provide metallic core or metallic-faced, acid- and alkali-resistant, polyethylene plastic warning tape manufactured for the purpose of early warning and identification of utilities buried below the tape. Tape shall be at least 3 inches in width. Color of tape shall be as standard with the manufacturer with respect to the type of utility buried below the tape. Tape shall have lettering at least 1 inch high with warning and identification imprinted in bold black letters continuously over the entire tape length with not less than the following identification on the tape: BURIED JET FUEL PIPING BELOW. Tape shall be installed in accordance with the printed recommendations of the tape manufacturer, as modified herein. Tapes shall be buried at a depth of 6 inches from the top of the subgrade or 12 inches below the top surface of earth. Provide permanent color and printing, unaffected by moisture or soil.

3.7.4 Clearances

Install pipe to be clear of contact with other pipes, pipe sleeves, casings, reinforcing steel, conduits, cables, or other metallic structures. Where pipes cross other pipes or structures with a separation of less than 6 inches, install an insulating separator. Protect the pipe from contact with a 36-inch square by 1/2-inch thick Teflon or UHMWPE sheet.

3.7.5 Protective Coating

When the protective coating on pipe is damaged, the Contracting Officer shall be notified and shall inspect the pipe before the coating is patched. If the damage to the pipe is deeper than 0.050-inch, the damage shall be repaired by welding in accordance with paragraph "WELDING". If the pipe is dented, out of round or damaged to the point that welding will not make it good as new, the length of pipe shall be rejected.

3.8 FIELD QUALITY CONTROL

3.8.1 System Commissioning

Conform to Section 33 08 55 COMMISSIONING OF FUEL FACILITY SYSTEMS.

3.8.2 Tests

Labor, materials, equipment, electricity, repairs, and retesting necessary for any of the tests required herein shall be furnished by the Contractor. Perform piping test in accordance with the applicable requirements of ASME B31.3 except as modified herein. To facilitate the tests, various sections of the piping system may be isolated and tested separately. Where piping sections terminate at flanged valve points, close the line by means of blind flanges in lieu of relying on the valve. Provide tapped flanges to allow a direct connection between the piping and the air compressor and/or pressurizing pump. Use tapped flanges for gauge connections. Taps in the permanent line will not be permitted. Gauges will be subject to testing and approval. Provide provisions to prevent displacement of the piping during testing. Keep personnel clear of the piping during pneumatic testing. Only authorized personnel shall be

permitted in the area during pneumatic and hydrostatic testing. Isolate equipment such as pumps, tanks, filter separators, and meters from the piping system during the testing. Do not exceed the pressure rating of any component in the piping system during the testing. Following satisfactory completion of each test, relieve the test pressure and seal the pipe immediately. Piping to be installed underground shall not receive field applied exterior coatings at the joints or be covered by backfill until the piping has passed the final pneumatic tests described herein.

3.8.2.1 Exterior Coating Holiday Test

Following installation, test the exterior coating of direct buried piping for holidays using high-voltage spark testing in accordance with NACE SP0188. Repair holidays and retest to confirm holiday-free coating. Test shall include all existing underground piping exposed for this project.

3.8.2.2 Preliminary Pneumatic Test

Apply a 25 psig pneumatic test to product piping. Maintain the pressure while soapsuds or equivalent materials are applied to the exterior of the piping. While applying the soapsuds, visually inspect the entire run of piping, including the bottom surfaces, for leaks (bubble formations). If leaks are discovered, repair the leaks accordingly and retest.

3.8.2.3 Final Pneumatic Test

Following the preliminary pneumatic test, apply a 25 psig pneumatic test to all product piping and hold for a period not less than 2 hours. During the test period, there shall be no drop in pressure in the pipe greater than that allowed for thermal expansion and contraction. Disconnect the pressure source during the final test period. If leaks are discovered, repair the leaks accordingly and retest.

3.8.2.4 Hydrostatic Test

Hydrostatically test product piping with the system operating fuel. Test at the corresponding pressures identified in Table 2 for the corresponding product piping material type. Maintain the pressure within the piping for 4 hours with no leakage or reduction in gauge pressure. If leaks are discovered, repair the leaks accordingly and retest.

Table 2. Hydrostatic Test Pressures

Product Piping Material Type	Min Test Pressure	Max Test Pressure
Carbon Steel	205 psig	225 psig
Stainless Steel (1)	205 psig	225 psig
Stainless Steel (2)	205 psig	225 psig

Table 2. Hydrostatic Test Pressures

Notes: 1. Grade F304 Flanges Used
2. Grade F304L Flanges Used

3.8.3 Manufacturer Field Service

Provide manufacturer's field service representatives at no additional cost to the Government to check each pump and control valve for proper installation prior to system flushing. Following the flushing and adjusting procedures, the service representatives shall also witness as a minimum the first two days of operation. Provide any additional time required due to delays or corrections by the Contractor at no additional cost to the Government. The manufacturer's field service representative shall also instruct the required personnel in the proper operation and maintenance of the pumps and control valves.

-- End of Section --

SECTION 33 52 43.14

CONTROL VALVES, FUEL SYSTEMS
02/10

PART 1 GENERAL

1.1 REFERENCES

The publications listed below form a part of this specification to the extent referenced. The publications are referred to in the text by basic designation only.

ASME INTERNATIONAL (ASME)

ASME B16.24	(2011) Cast Copper Alloy Pipe Flanges and Flanged Fittings: Classes 150, 300, 600, 900, 1500, and 2500
ASME B16.5	(2013) Pipe Flanges and Flanged Fittings: NPS 1/2 Through NPS 24 Metric/Inch Standard
ASME BPVC SEC VIII D1	(2010) BPVC Section VIII-Rules for Construction of Pressure Vessels Division 1

ASTM INTERNATIONAL (ASTM)

ASTM A194/A194M	(2013) Standard Specification for Carbon and Alloy Steel Nuts for Bolts for High-Pressure or High-Temperature Service, or Both
ASTM A216/A216M	(2012) Standard Specification for Steel Castings, Carbon, Suitable for Fusion Welding, for High-Temperature Service
ASTM A269	(2013) Standard Specification for Seamless and Welded Austenitic Stainless Steel Tubing for General Service
ASTM A320/A320M	(2011a) Standard Specification for Alloy/Steel and Stainless Steel Bolting Materials for Low-Temperature Service
ASTM A536	(1984; R 2009) Standard Specification for Ductile Iron Castings
ASTM A743/A743M	(2013a) Standard Specification for Castings, Iron-Chromium, Iron-Chromium-Nickel, Corrosion Resistant, for General Application
ASTM D2000	(2012) Standard Classification System for Rubber Products in Automotive Applications
ASTM D751	(2006; R 2011) Coated Fabrics

NATIONAL FIRE PROTECTION ASSOCIATION (NFPA)

NFPA 70	(2014; AMD 1 2013; Errata 2013; AMD 2 2013) National Electrical Code

SOCIETY OF AUTOMOTIVE ENGINEERS INTERNATIONAL (SAE)

SAE AMS 3216	(2005; Rev G) Fluorocarbon (FKM) Rubber High-Temperature - Fluid Resistant Low Compression Set 70 To 80
SAE J200	(2011) Classification System for Rubber Materials
SAE J429	(2013) Mechanical and Material Requirements for Externally Threaded Fasteners

1.2 ADMINISTRATIVE REQUIREMENTS

Design conditions shall be as specified in Section 33 52 43 FUEL DISTRIBUTION. Components shall be suitable for ANSI Class 150 (275 psig at 100 degrees F).

a. Control valves specified herein shall be of one manufacturer. The valve manufacturer shall also produce the hydraulically-operated pilots. For each type control valve required and specified, submit the following:

   1. Flow diagrams.

   2. Operational description of the control valve and pilot control system.

   3. Complete valve assembly list of materials, along with material Certificates of Conformance, used in the manufacture of the control valves and pilot systems.

   4. Sectional drawings of main valve and control pilot systems.

b. Before shipment, each individual control valve shall be operationally tested and adjusted by manufacturer under actual flow conditions utilizing a hydrocarbon test fluid with a specific gravity comparable to either JP-5, F-24, Corrosion Inhibitor, or Static Dissipator additive based on intended use. Manufacturer shall submit certified records of test data.

c. Operation and maintenance information shall be submitted for each individual type control valve specified herein. Refer to Section 01 78 23 OPERATION AND MAINTENANCE DATA for the information to be submitted.

1.3 SUBMITTALS

Government approval is required for submittals with a "G" designation; submittals not having a "G" designation are for Contractor Quality Control approval. Submit the following in accordance with Section 01 33 00 SUBMITTAL PROCEDURES:

SD-02 Shop Drawings

Overfill Prevention Valves (HLV-1 through HLV-7, No HLV-4); G

Truck Fill Stand Two-Stage Set-Stop Control Valve (FCV-1 through FCV-6); G

SD-03 Product Data

Control Valves; G

Overfill Prevention Valves (HLV-1 through HLV-7, No HLV-4); G

Truck Fill Stand Two-Stage Set-Stop Control Valve (FCV-1 through FCV-6); G

SD-06 Test Reports

Control Valves; G.

Overfill Prevention Valves (HLV-1 through HLV-7, No HLV-4); G

Truck Fill Stand Two-Stage Set-Stop Control Valve (FCV-1 through FCV-6); G

SD-07 Certificates

Previous Air Force/Military Projects; G.
Qualified Engineers; G
Field Assistance; G

SD-10 Operation and Maintenance Data

Overfill Prevention Valves (HLV-1 through HLV-7, No HLV-4); Data Package 3

Truck Fill Stand Two-Stage Set-Stop Control Valve (FCV-1 through FCV-6); Data Package 3

1.4 QUALITY ASSURANCE

1.4.1 Field Assistance

Provide the following:

a. Proof of experience on previous Air Force/Military projects.

b. Number of qualified engineers (factory trained)available to provide startup support.

c. Written assurance as to ability to respond to specified time for field assistance.

1.5 WARRANTY

If a problem attributable to the valve's manufacturer or installation arises after the initial system start-up has been accomplished, and after system final acceptance date, 48 hours from the time of notification that a problem exists is allowed to solve the problem. The problem shall be

solved to the satisfaction of the Contracting Officer. If the Contractor cannot effectuate a proper resolution to the problem as outlined above in the 48 hour period, provide a factory trained engineer from the manufacturer of the valve within 48 hours after the expiration of the Contractor's initial 48 hour period to effectuate a resolution of the problem above. All services provided by the valve manufacturer shall be at no cost to the Government. When it has been determined by the Contractor, Contracting Officer, and the valve manufacturer's representative that the valve(s) cannot be repaired in its installed position in the fuel system, it shall be replaced with a new valve and pilot assembly within 48 hours after the initial 96-hour period listed above expires and at no cost to the Government.

PART 2 PRODUCTS

2.1 MATERIALS AND EQUIPMENT

The type of materials which come in contact with the fuel or additives, if not specified herein before, shall be noncorrosive.

2.2 CONTROL VALVES

2.2.1 General

Control valves shall be single-seated globe type, diaphragm actuated, hydraulically operated valves. Valves shall consist of 3 major components: the valve body, valve cover, and diaphragm assembly. The diaphragm assembly shall be the only moving part. In the event of diaphragm failure, valve shall fail closed against flow, unless otherwise indicated. The main valve shall be drip-tight when closed. Each valve shall have an external indicator to show the position of the valve disc at all times. Control valves shall be shipped from the factory as a complete assembly with all pilot controls and pilot auxiliary piping properly installed on the main valve. Materials which come in contact with the fuel or additives shall be resistant to the effects of and not harmful to aircraft engine fuel and shall be stainless steel, or electroless nickel plated ductile iron unless noted otherwise. Materials for control valves, and items to be mounted on the valves shall be as follows:

2.2.1.1 Bodies, Bonnets, and Covers

Shall be constructed of one of the following materials:

a. Cast steel conforming to ASTM A216/A216M, Grade WCB internally plated with chromium, nickel or internally electroless nickel plated.

b. Cast stainless steel conforming to ASTM A743/A743M.

c. Ductile iron conforming to ASTM A536, electroless nickel plated.

d. Bodies shall have flanged inlet and outlet connections. Valve shall have a screwed bottom drain plug.

2.2.1.2 Valve Seats

Valve seats shall be stainless steel in accordance with ASTM A743/A743M. It shall be possible to remove the valve seat while the valve is connected in the line. Valve seat and upper stem bearing shall be removable and screwed in the body and/or cover. The lower stem bearing must be

concentrically contained in the valve seat and shall be exposed to flow on all sides. The diameter of the valve seat shall be the same size as the inlet and/or outlet flanges of the main valve.

2.2.1.3 Valve Discs

Valve discs shall contain a resilient, fluoroelastomer (FKM), commonly referred to as Viton disc conforming to SAE AMS 3216 having a rectangular cross section, contained on 3.5 sides by a disc retainer and a disc guide, forming a drip tight seal against the seat. The disc shall be usable on either side. The disc guide shall be the contoured type capable of holding disc firmly in place during high differential pressure conditions that may develop across the seating surface. The disc retainer shall be capable of withstanding rapid closing shocks.

2.2.1.4 Diaphragm Assembly

Diaphragm Assembly shall form a sealed chamber in the upper portion of the valve, separating the operating fluid from the line pressure. The diaphragm assembly shall contain a valve stem which is fully guided at both ends by a bearing in the valve cover and an integral bearing in the valve seat. Valve body and cover shall be sealed by the diaphragm. Valve stem shall be stainless steel. The bearing material shall be compatible with the fuel specified and shall not contain zinc coated metals, brass, bronze, or other copper bearing alloys. The diaphragm shall be of a nonwicking material or design, with a minimum of 2 layers of nylon fabric bonded with a minimum of 3 layers of synthetic rubber (valves 2-1/2 inches and smaller one layer of nylon fabric). The edge area of the center hole for the valve stem shall be sealed by vulcanization. Materials to be resistant to aromatics of up to 50 percent in accordance with ASTM D2000 (SAE J200). The diaphragm must have a MULLINS-burst rating according to ASTM D751 of a minimum of 600 psi per layer of nylon fabric. All diaphragm sizes must be cycle tested to a minimum of 100,000 cycles, by alternately applying pressure under the diaphragm (main valve pressure) and above the diaphragm (cover chamber pressure). That test shall be certified by the manufacturer. The diaphragm shall not be used as a seating surface. The diaphragm must be fully supported by the body and cover in either the open or closed position.

2.2.1.5 Bolts, Screws and Nuts

a. For Ductile Iron, and Cast Steel Body Valves.

    1. Bolts and Screws, cadmium plated steel in accordance with SAE J429, Grade 5.

    2. Nuts, cadmium plated steel in accordance with ASTM A194/A194M, Grade 2 H.

b. For Stainless Steel Body Valves. Bolts, Screws and Nuts, ASTM A320/A320M, Grade B8M C.1.1.

2.2.1.6 Pilot Control System and Auxiliary Piping

Pilot Control System and auxiliary piping shall be stainless steel, seamless, fully annealed tubing conforming to ASTM A269, Grade TP316, Rockwell hardness B80 or less. Wall thickness for 1/2-inch tubing to be 0.049-inch. Threaded connections shall be used in pilot system piping and shall be o-ring type with FKM o-rings. Tubing connections shall not be

welded.

2.2.1.7 Pilot Valves

Pilot valves shall have stainless steel bodies conforming to ASTM A743/A743M with stainless steel internal working parts. Disc and diaphragm assemblies shall be as specified herein before. The setting of adjustable type pressure operated pilot valves shall be easily adjusted by means of a single adjusting screw. The adjusting screw shall be protected by a threaded cap drilled to accommodate a lead-seal wire and a lock nut shall be provided on the adjusting screw to lock it in position at the desired setting. The lead seal wire shall be installed after final acceptance of the system. Spare wire seals and the "embossing" tool will be turned over to the Contracting Officer for the LFM shop.

2.2.1.8 Solenoids

Solenoids for operation of pilot valves shall be housed in an explosion-proof case suitable for Class I, Division 1, Group D with maximum temperature rating of T2D (419 degrees F), hazardous locations as defined in NFPA 70. Solenoids shall operate on 120 volts, 60 cycle, single phase, alternating current. A manual type operator or needle valve to bypass the solenoid valve shall be provided for emergency manual operation.

2.2.2 Serviceability of Main Valve Internal Parts

Main valve movable parts including strainers, valve seat, stem bearings, and control system shall be replaceable without removing the main valve from the line. All nonmetallic parts shall be replaceable.

2.2.3 Total Lengths

The total valve length does not include the orifice plate flange (when used). If the control valve being supplied has the orifice plate built into its flange, the spacer provided shall bring the valve face-to-face dimension equal to those listed below plus 0.0875 inch. The lengths of the valves shall be equal for the following materials: cast stainless steel, cast steel, and ductile iron.

SIZE inches	VALVE LENGTH inches
1-1/2	8.5
2	9.375
3	12
4	15
6	20
Note: Tolerance shall be plus or minus 0.03 inch for size 1-1/2 inches through 8 inches and plus or minus 0.06 inch for size 10 thru 16 inches.	

Control valves not meeting these face to face dimensions shall be supplied with spacers suitable for the proper installation of the valve.

2.2.4 Flanges

MATERIAL	SEALING SURFACE
Cast Steel, ASME B16.5 Class 150	Raised Face
Cast Stainless Steel, ASME B16.5	Raised Face Class 150
Ductile Iron, ASME B16.24 Class 150	Flat Face
Note: The mating flange shall be made the same as above.	

2.2.5 Identification

2.2.5.1 Main Valve Body

The following shall be cast into the main valve body:

a. Pressure Class

b. Size

c. Material

d. Foundry Heat Number and Identification

e. Manufacturer

f. Flow Pattern

2.2.5.2 Main Valve Cover

The following shall be cast into the main valve cover:

a. Size

b. Material

c. Foundry Heat Number and Identification

2.2.5.3 Brass Name Plates

Brass name plates shall be fastened to the valve. Body name plates shall list the following:

a. Size

b. Model Number

c. Stock Number

d. Manufacturer/Supplier

e. Manufacturer's Inspection Stamp

2.2.5.4 Inlet Name Plate

Inlet name plate shall list the following:

a. Size

b. "Inlet" Marking

c. Assembly Model Number

d. Part Number

2.2.5.5 Outlet Name Plate

Outlet name plate shall list the "Outlet" Marking.

2.2.5.6 Pilot Valves

Pilot valves shall be tag identified. The valve shall have the field adjusted start up setting engraved on a plastic tag, white with black lettering.

2.3 INDIVIDUAL CONTROL VALVE OPERATIONAL REQUIREMENTS

Operation, performance, and special features of the individual control valves shall be as specified herein.

2.3.1 Overfill Prevention Valves for Horizontal Factory-Fabricated Storage Tanks (HLV-1, HLV-2, HLV-3, HLV-5, HLV-6, HLV-7)

2.3.1.1 Size

As indicated on drawings (HLV-1, HLV-2, HLV-3, HLV-5, HLV-6, HLV-7).

2.3.1.2 Capacity

a. JP-5 Day Tanks (HLV-1, HLV-2, HLV-3): 600 gpm

b. F-24 Breakout Tank (HLV-5): 300 gpm

c. Corrosion Inhibitor/Lubricity Improver Tank (HLV-7): 200 gpm

d. Static Dissipator Additive Tank (HLV-6): 300 gpm

2.3.1.3 Operation

Hydraulically operated overfill valve shall close automatically upon rising to fill level as indicated on tank schedule drawings. Valve shall open automatically upon falling below the automatic shutoff fill level.

2.3.1.4 Flow Control, JP-5 Day Tanks (HLV-1, HLV-2, and HLV-3) and F-24 (HLV-5) Breakout Tank Overfill Valves Only

JP-5 Day Tanks (HLV-1, HLV-2, and HLV-3) overfill valves shall limit tank fill flow to 600 gpm. F-24 breakout tank shall limit flow to 300 gpm. Sensing shall be by orifice. Valve to modulate flow without hunting. Rate of flow to be manually adjustable and utilize a downstream orifice plate holder.

2.3.1.5 Control Float

Automatic opening and closing of the valve shall be initiated by a control

float located within the Product Tank. Control float shall be provided with a manual tester, mounted external to the tank, for testing of overfill valve operation.

2.3.1.6 Pressure Reservoir

Valve shall be provided with a pressure reservoir to supply required hydraulic pressure for operation. Valve shall close upon loss of reservoir pressure. Reservoir shall be a 1 gal capacity bladder-type tank, carbon steel constructed, tested and stamped in accordance with ASME BPVC SEC VIII D1 for a working pressure of 125 psi and precharged with air of 13-15 psig. The tank will be epoxy lined. The tank will be fitted with an air charging valve and pressure gauge.

2.3.1.7 Thermal Relief

Overfill valve shall be provided with a pressure sustaining control valve that shall automatically, upon inlet pressure rising to 125 psig, open allowing thermal relief around overfill valve. Pressure sustaining valve shall automatically close upon inlet pressure dropping below 125 psig.

2.3.1.8 Solenoid Control

Overfill valves shall be provided with a solenoid control valve to close the main valve as back-up based on signal from the tanks High-High Level Switch.

2.3.1.9 Strainer

Pressure reservoir inlet line shall be provided with a shut-off valve, strainer and check valve.

2.3.2 Truck Fill Stand Two-Stage Set-Stop Control Valve (FCV-1 through FCV-6)

2.3.2.1 Size

4-inch.

2.3.2.2 Flow

450 GPM.

2.3.2.3 Operation

Dual Solenoid control shall interface with MicroLoad computer to regulate opening/closing of the Truck Fill Stand flow control valve based on set-stop input. Dual Solenoids shall regulate Lowflow condition at start-up and shut-down of truck filling operations to limit system surges.

2.3.2.4 Pressure Reducing Feature

Pressure reducing control is a normally open control that senses main valve outlet pressure changes. An increase in outlet pressure tends to close control and a decrease in outlet pressure tends to open control, this causes main valve cover pressure to vary and the main valve modulates (opens and closes) maintaining a relatively constant outlet pressure.

Pressure Reducing Control shall be field adjustable.

2.3.2.5 Quick Closure

Valve shall close rapidly when outlet pressure exceeds control set-point. Valve shall limit the surge pressure on the bottom loader of a tank truck to a maximum of 85 psig when filling at 450 GPM with a tank truck valve closure of 0.5 second. The valve shall reopen when the outlet pressure drops below the set-point of the pilot if the deadman control lever is still depressed.

2.3.2.6 Opening Speed Control

Valve shall control the opening speed of the main valve. The control shall be adjustable with a range of 2 to 30 seconds. Factory set at 10 seconds.

2.3.2.7 Deadman Control

Deadman shall be hydraulically connected to the pilot system of the main valve. Valve shall open when deadman control lever is pressed and shall close the valve when the lever is released. On rupture of the deadman hose between outlet of deadman control and main valve pilot system, there shall be no fuel leakage. Main valve shall close in 2 seconds maximum when one of the deadman hose couplers is disconnected. Length of hose shall be 15 feet.

2.3.2.8 Thermal Relief

Valve to open for pressure equalization and return flow when downstream pressure exceeds upstream pressure.

2.3.2.9 Strainer

A 40-mesh stainless steel wire, self-cleaning strainer shall be provided in the pilot valve supply piping.

PART 3 EXECUTION

3.1 VALVE TESTING AND START-UP SUPPORT

Provide the services of a factory trained and certified service engineer authorized/sanctioned/certified by the valve manufacturer to verify that each valve has been properly installed and to verify valves were factory operationally tested, adjusted and set per these specifications. The service engineer shall assist the Contractor in the valve start-up adjustment process and will remain on site until all control valves function as required by the contract documents.

-- End of Section --

SECTION 33 52 43.23

AVIATION FUEL PUMPS
02/10

PART 1 GENERAL

1.1 REFERENCES

The publications listed below form a part of this specification to the extent referenced. The publications are referred to in the text by basic designation only.

AMERICAN GEAR MANUFACTURERS ASSOCIATION (AGMA)

AGMA 6013	(2006.04.25) Standard for Industrial Closed Gears

AMERICAN PETROLEUM INSTITUTE (API)

API Std 610	(2010; Errata 2011) Centrifugal Pumps for Petroleum, Petrochemical, and Natural Gas Industries
API Std 676	(2009. 11.01) Positive Displacement Pumps-Rotary - Third Edition

ASME INTERNATIONAL (ASME)

ASME B16.5	(2013) Pipe Flanges and Flanged Fittings: NPS 1/2 Through NPS 24 Metric/Inch Standard

ASTM INTERNATIONAL (ASTM)

ASTM A182/A182M	(2014a) Standard Specification for Forged or Rolled Alloy and Stainless Steel Pipe Flanges, Forged Fittings, and Valves and Parts for High-Temperature Service
ASTM A276	(2013a) Standard Specification for Stainless Steel Bars and Shapes
ASTM A487/A487M	(1993; R 2012) Standard Specification for Steel Castings Suitable for Pressure Service
ASTM A536	(1984; R 2009) Standard Specification for Ductile Iron Castings
ASTM A582/A582M	(2012; E 2012) Standard Specification for Free-Machining Stainless Steel Bars
ASTM A743/A743M	(2013a) Standard Specification for Castings, Iron-Chromium, Iron-Chromium-Nickel, Corrosion Resistant, for General Application

ASTM C827/C827M	(2010) Change in Height at Early Ages of Cylindrical Specimens from Cementitious Mixtures

HYDRAULIC INSTITUTE (HI)

HI M100	(2009) HI Pump Standards Set

INSTITUTE OF ELECTRICAL AND ELECTRONICS ENGINEERS (IEEE)

IEEE 112	(2004) Standard Test Procedure for Polyphase Induction Motors and Generators

NATIONAL ELECTRICAL MANUFACTURERS ASSOCIATION (NEMA)

NEMA MG 1	(2011; Errata 2012) Motors and Generators

NATIONAL FIRE PROTECTION ASSOCIATION (NFPA)

NFPA 70	(2014; AMD 1 2013; Errata 2013; AMD 2 2013) National Electrical Code

THE SOCIETY FOR PROTECTIVE COATINGS (SSPC)

SSPC PA 1	(2000; E 2004) Shop, Field, and Maintenance Painting of Steel
SSPC SP 10/NACE No. 2	(2007) Near-White Blast Cleaning

U.S. DEPARTMENT OF DEFENSE (DOD)

MIL-DTL-24441	(2009; Rev D) Paint, Epoxy-Polyamide, General Specification for
MIL-DTL-5624	(2013 Rev V) Turbine Fuel, Aviation, Grades JP-4 and JP-5
MIL-DTL-83133	(2011; Rev H; Am 1 2013) Turbine Fuels, Aviation, Kerosene Type, JP-8 (NATO F-34), NATO F-35 and JP-8 +100 (NATO F-37)
MIL-F-16884G	(1973; Rev G) Fuel Oil Diesel Marine

1.2 ADMINISTRATIVE REQUIREMENTS

Design conditions shall be as specified in Section 33 52 43 FUEL DISTRIBUTION.

a. Tests: Hydrostatic, performance, vibration, and NPSH tests shall be conducted at the factory on each pump in accord with API 610. Test each pump with the actual motor which will drive the pump in the field, unless the water test media will cause overload of the motor. If so, provide vibration test report for motor separately. All tests will be observed by the Contracting Officer or the designated representative. Provide the Contracting Officer 30 days notice prior to performance of factory tests in order to schedule observing such tests. Performance testing shall not occur prior to acceptance of shop drawing submittal.

b. Test reports shall bear the serial number of both pump and driver.

Submit manufacturer's certified reports of hydrostatic, performance, and NPSH tests. Submit manufacturer's certified test curves.

c. Operation and Maintenance Manuals shall be submitted for the pumps and appurtenance specified herein. Refer to Section 01 78 23 OPERATION AND MAINTENANCE DATA for the information to be submitted.

d. Motors, manual or automatic motor control equipment, except where installed in motor control centers, and protective or signal devices required for the operation specified herein shall be provided under this section in accordance with Section 26 20 00 INTERIOR DISTRIBUTION SYSTEM. Any wiring required for the operation specified herein, but not shown on the electrical plans, shall be provided under this section in accordance with Section 26 20 00 INTERIOR DISTRIBUTION SYSTEM. Motors shall be high efficiency type and in accordance with Section 26 20 00 INTERIOR DISTRIBUTION SYSTEM.

1.3 SUBMITTALS

Government approval is required for submittals with a "G" designation; submittals not having a "G" designation are for Contractor Quality Control approval. Submit the following in accordance with Section 01 33 00 SUBMITTAL PROCEDURES:

SD-02 Shop Drawings

Truck Fillstand Pumps(P-1 through P-6); G
Additive Offload Pumps; G
Transfer Pump; G
Stripper Pumps; G

SD-03 Product Data

Truck Fillstand Pumps(P-1 through P-6); G
Additive Offload Pumps; G
Transfer Pump; G
Stripper Pumps; G

SD-06 Test Reports

Certified Test Curves; G

SD-07 Certificates

Truck Fillstand Pumps(P-1 through P-6); G
Additive Offload Pumps; G
Transfer Pump; G
Stripper Pumps; G

SD-10 Operation and Maintenance Data

Truck Fillstand Pumps (P-1 through P-6); Data Package 3
Additive Offload Pumps; Data Package 3
Transfer Pump; Data Package 3
Stripper Pumps; Data Package 3

PART 2 PRODUCTS

2.1 DESIGN CONDITIONS

Components to be ASME B16.5, Class 150 (275 psig at 100 degrees F). Components to be suitable for outside, unsheltered location, and function normally in ambient temperatures between 0 and 100 degrees F. Components shall be suitable for use with the product systems for which they are intended to serve. The fuel products include F-24 turbine fuel, JP-5 turbine fuel, and F-76 diesel fuel. The additive products are the fuel system Corrosion Inhibitor/Lubricity Improver (CI/LI) and the Static Dissipater Additive (SDA).

2.1.1 Properties of F-24 Turbine Fuel

The properties of F-24 turbine fuel are specific gravity 0.775 to 0.840 at 60 degrees F and True Vapor pressure of 0.05 psia. The military specification is MIL-DTL-83133.

2.1.2 Properties of JP-5 Turbine Fuel

The properties of JP-5 turbine fuel are specific gravity of 0.788 to 0.845 at 60 degrees F and True Vapor Pressure of 0.004 psia. The military specification is MIL-DTL-5624.

2.1.3 Properties of F-76 Diesel Fuel Marine (DFM)

The properties of F-76 diesel fuel are specific gravity of 0.825 to 0.855 at 60 degrees F and True Vapor pressure of 0.05 psia. The military specification is MIL-F-16884G.

2.1.4 Properties Fuel System Corrosion Inhibitor/Lubricity Improver (CI/LI)

The properties of CI/LI with a 50/50 dilution conforming to MIL-PRF-25017 are; specific gravity is 0.909 at 60 degrees F, flash point is greater than 88 degree F, and viscosity range of 4.6 cSt at 104 degrees F and 25 cSt at 0 degrees F.

2.1.5 Properties of Fuel System Static Dissipater Additive (SDA)

The properties of SDA known as Stadis 450 are; specific gravity of 0.92 at 60 degrees F, flash point of 42 degrees F, and viscosity range of 7.5 cSt at 100 degrees F and 47 cSt at 0 degrees F.

2.2 TRUCK FILLSTAND PUMPS

2.2.1 Capacity

Pump No.	Fluid	Capacity	Total Dynamic Head (feet)	Rated Total Motor Power (HP)
P-1	JP-5	450 gpm	154	30
P-2	JP-5	450 gpm	154	30
P-3	F-24	450 gpm	154	30

Pump No.	Fluid	Capacity	Total Dynamic Head (feet)	Rated Total Motor Power (HP)
P-4	F-24	450 gpm	154	30
P-5	F-76	450 gpm	153	30
P-6	F-76	450 gpm	153	30

Overall efficiency at design conditions of pump and driver, connected, shall be minimum of 70 percent. Pump head capacity shall be continually rising and shall be free of dips and valleys from design point to shut-off head. Pump shut-off head shall have a 10 to 20 percent head rise to shut off. Pump shall be capable of at least a 10 percent head increase at rated conditions by installing a new impeller. Pumps shall not overheat or be damaged in any way while operating continuously at a minimum flow condition of 30 percent design flow rate and continuously at a maximum flow condition of 125 percent required capacity GPM. The unit will also be required to operate at a flow of 12.5 percent required capacity without exceeding the vibration limits given in API Std 610.

2.2.2 General Requirements

a. The pumps for this service shall meet the requirements of API Std 610, latest edition. Whenever the information contained herein conflicts with said standard, the information here in shall govern. The pumps for this service shall run at a nominal 3600 rpm and shall be single stage centrifugals, horizontally mounted, vertical or radial split case, enclosed impeller, vertical-in-line with end suction and discharge. All parts shall be factory inspected so that parts are interchangeable. Pumps and motors shall be furnished as complete units as herein specified. Pump assembly shall be statically and dynamically balanced for all flow rates from no flow to 120 percent of design flow.

b. The pump shall require no more than 20-feet of net positive suction head (NPSHR) when it is operated with water at design capacity. A hydrocarbon reduction or correction factor shall not be used. Pump suction specific speed shall be less than 12,000.

c. The pump shall be vertical in-line, single stage, single suction with double volute construction to assure radial balance. It shall be designed to permit removal of the impeller, shaft, bearings and bearing housing as an assembly, without disconnecting the suction or discharge piping.

d. The pump case shall be vertical in-line type for ease of piping alignment. Flange ratings shall be class 300-pound per ASME B16.5. The case shall be designed for maximum discharge pressure at pumping temperature but not less than 550 psig, with a minimum corrosion allowance of 1/8-inch. The suction and discharge flanges as well as the cover bolting surfaces shall be backfaced or spotfaced for positive bolt seating. The radial case to cover split shall be a metal-to-metal fit with a confined, controlled compression gasket.

e. The pump cover shall contain a stuffing box designed to accept an unbalanced mechanical seal. The stuffing box shall have a minimum of 3-inch studs for seal gland bolting. The gasket fit for seal gland to stuffing box shall be of the controlled compression type with

metal-to-metal joint contact.

f. Both case and cover are to be fitted with renewable wear rings.

g. The impeller shall be of the enclosed type, dynamically and hydraulically balanced. It shall be key driven, held in place by a positive lock, threaded against rotation.

h. Mechanical Seal. A single unbalanced mechanical seal per API Std 610 code USTHN of multiple spring design shall be supplied. The seal gland shall be tapped for three connections and each shall be stamped for identification as follows: Q for quench; F for flush; and D for drain. A non-sparking throttle bushing pressed into the seal end plate against an outside shoulder shall be provided to minimize leakage on complete seal failure.

i. Bearing Housing. Grease lubricated anti-friction, radial and thrust bearings of standard design shall be supplied. The bearings shall be selected to give a minimum L-10 rating life of 25,000 hours in continuous operation. Pumps may be provided with or without bearing brackets.

j. Shafts shall be of ample size to transmit the maximum torque required under specified operating conditions, and to withstand continuously all stresses resulting from supported weights, thrusts and starting, including across-the-line motor starting. It shall be key seated to provide positive drive for the line motor starting. It shall be key seated to provide positive drive for the coupling, shaft sleeve and impeller. The shaft stiffness factor shall be under 70. The radial bearing centerline to impeller centerline, distance, and the pump shaft diameter under the sleeve shall be provided to calculate the factor.

k. A rigid type spacer coupling shall be supplied. The spacer length shall permit the removal of the assembled pullout element without disturbing the driver or the suction and discharge piping. Couplings shall be properly keyed in place. Cylindrical fits shall be light enough to permit easy removal of the hub in the field without the need for heating. A service factor of at least 1.5 shall be used in selecting couplings based on manufacturer's ratings.

l. Removable coupling guards of the non-sparking type shall be supplied. They shall comply with the requirements of OSHA.

m. Total indicated shaft runout at coupling end shall be 0.001-inches or less. Total shaft deflection shall be no more than 0.002-inches at face of stuffing box.

n. Materials. Materials shall be Class S-6, unless noted otherwise. No zinc, brass, bronze or other copper bearing alloy shall come in contact with the fuel.

p. Impeller material shall be cast stainless steel ASTM A487/A487M GR CF8M or ASTM A743/A743M CA 6NM, per material Class S-6.

q. Wear rings shall be stainless steel ASTM A182/A182M GR F6 or ASTM A276 TP410 or 416.

r. Shaft shall be stainless steel ASTM A276 type 410 or 416 or ASTM A582/A582M Type 410 or 416 with renewable shaft sleeve of ASTM A276

type 316L with hard facing under mechanical seal gasket.

s. Testing. All shop testing shall be performed in accordance with the HI M100.

2.2.3 Service Nameplate

A pump service nameplate, of type 18-8 stainless steel or monel, attached by stainless steel pins at an accessible point on the pump, shall be furnished in addition to the identification nameplate. The pump service nameplate shall be stamped with the following information:

Manufacturer's name
Serial number of pump
Capacity, gpm
Pumping head, ft.
Maximum specific gravity of fluid to be pumped
Revolutions per minute
Horsepower of driver

2.2.4 Identification Nameplate

A pump identification nameplate of Type 18-8 stainless steel or monel shall be provided and securely attached by stainless steel pins to a conspicuous place on the pump head. Tagging in letters 1/4-inch high shall bear the equipment number as shown on the drawings.

2.2.5 Exterior Primer Coat

Exterior surfaces shall be primed and coated by the manufacturer. Coating shall be applied meeting requirements of SSPC PA 1. Surface cleaning shall meet requirements of SSPC SP 10/NACE No. 2. Metal primer shall be zinc rich paint conforming to specification MIL-DTL-24441, Type 1, Class 3. Dry film thickness shall be 2 to 4 mils.

2.2.6 Exterior Topcoat

Manufacturer's standard exterior topcoat shall be applied at factory.

2.2.7 Motors

a. Motor shall be furnished by the pump manufacturer and shall be suitable for the environment and operating conditions to which it will be subjected. Provide space heaters suitable for operation on 460 or 120 volts as indicated on the drawings within the motor enclosure to prevent moisture condensation after shut-down. Motor shall be UL listed for use in Class 1, Division 1, Group D hazardous areas, and shall have a maximum temperature rating of T2D (419 degrees F) as defined by NFPA 70. The motor nameplate shall include the temperature rating of the motor and locked-rotor indicating code letters in accordance with NFPA 70, Table 430-7(b).

b. Voltage rating shall be 460 volts, 3 phase, 60HZ. Motor nominal speed shall match pump. Motors shall be capable of delivering rated horsepower output successfully and continuously under conditions of voltage variations of 10 percent above or below rated voltage.

c. Pump manufacturer shall assure the specified output and proper operation of the pump without being overloaded at unity service factor

when operating at any point on the pump performance curve. In addition to having sufficient horsepower-output rating at rated speed, motor shall have performance characteristics which will allow, without injurious overheating of the motor, accelerating the load from standstill to rated speed under conditions of 10 starts per hour. Attention is specifically directed to the fact that thermal characteristics of motors with regard to capability for accelerating the load may vary greatly from motor manufacturer to motor manufacturer, notwithstanding that the horsepower rating may be the same. It is the pump manufacturer's responsibility to provide motors with adequate thermal starting characteristics as well as adequate rated-speed operating characteristics. Service factors shall conform with NEMA standards; however, service factors are only applicable at rated nameplate voltage and frequency. Since all system voltages are subject to variation, service factors above unity shall not be applied in sizing motor.

d. Motor shall be squirrel-cage induction type. Motor shall be NEMA Design B (normal-torque, low starting current).

e. Motor insulation shall be non-hydroscopic, NEMA Class F, 300 degrees F for motors. Stator windings shall be epoxy impregnated. The impregnations shall be applied by the vacuum and pressure process.

f. Winding temperature rise, (based on a maximum ambient temperature of 104 degrees F at 3300-feet altitude) shall not exceed 176 degrees F.

g. Bearings shall be ABMA minimum L10 life of 60,000 hours or L50 life of 300,000 hours suitable for the size, type, and application when the pump is operating at the specified flow and head.

h. Motor enclosures shall be totally enclosed, weather sealed, fan cooled, explosion-proof and shall be listed and labeled for Class 1, Group D areas. Provide bronze ground bolt on motor enclosure. All motor external electrical connections shall be terminated within a single terminal housing.

i. The dynamic balance, overspeed withstand capability, and sound power levels of the motor shall conform with NEMA standard requirements.

j. The pump manufacturer shall furnish the Contracting Officer with the recommended minimum run time for the motor.

k. Pump motor shall be provided with temperature limiting thermostats within the motor frame when required to meet Class 1, Group D requirements.

l. Pump motor shall be furnished with lifting lugs on the motor casing.

m. Unless indicated otherwise, motors for conventional applications over 15 horsepower shall be the premium efficient type. This requirement is not applicable to hermetically sealed motors, integrally mounted motors, motors specified as part of energy efficient equipment, wound rotor motors, or any application involving special construction or performance. Guaranteed minimum full load efficiencies shall be (based on 3600 rpm, 2 pole totally enclosed):

20 hp	92.0 percent	75 hp	95.5 percent
25 hp	92.0 percent	100 hp	93.5 percent
30 hp	92.0 percent	125 hp	94.5 percent
40 hp	92.0 percent	150 hp	94.5 percent
50 hp	92.5 percent	200 hp	94.5 percent
60 hp	92.5 percent	500 hp	94.5 percent

n. Other motors of different speed or housing classification shall also be of the premium efficient type, as advertised by the motor manufacturer, with efficiency greater than the standard line. Motor efficiencies shall have been verified in accordance with NEMA MG 1, 12.53.a., and determined using the dynamometer method as described in IEEE 112, Method B. All shop drawing submittals on motor driven equipment shall include the motor efficiency.

2.3 F-24 TRANSFER PUMP (P-9)

The pump for this service shall be sliding vane, positive displacement rotary design, with side suction and discharge. The pump shall be designed and constructed in accordance with API Std 676 and be suitable for F-24 fuel service. Whenever the information contained herein conflicts with said standard, the information herein shall govern.

2.3.1 Capacity

Capacity shall be:

Pump No.	Fluid	Capacity	Total Dynamic Head	Rated Total Motor
P-9	Jet-A	250 gpm	97 feet	15 hp

Overall efficiency at design conditions of pump and driver, connected, shall be minimum 80 percent or best available by manufacturer. The available net positive suction head (NPSHA) for the fluid is 21 feet.

2.3.2 Assembly

a. Pump, motor, gear reducer, couplings, and base plate shall be provided as a complete unit as specified herein. The pump shall have left-hand rotation. The pump design shall allow removal and replacement of the vanes, rotor, liner, and internal parts without removing the pump from the piping system.

b. The pump casing shall be thermal shock resistant ASTM A536 ductile iron with drain plugs. End connections shall be ASME B16.5, Class 150, flat face flanges. The casing and pump shall be designed for a maximum working pressure of 250 psig at operating temperature.

c. The pump shall be provided with external ball bearings. The bearings shall be single row, grease lubricated. The bearings shall be isolated

from the pumpage by mechanical seals. The mechanical seal rotating face shall be carbon and the stationary face shall be silicone carbide. The O-ring seals shall be viton.

d. The pump casing shall be manufactured with a built-in relief valve capable of maintaining a constant discharge pressure with the full capacity of the pump being bypassed. The relief valve set pressure shall be adjustable with an initial setting of 50 psi.

e. The pump shall be mounted on a fabricated base plate. The base plate shall be fabricated steel channels or I-beams, properly cross-braced and welded to steel plate suitable for mounting and maintaining alignment of pump, gear reducer, couplings, coupling guards, and motor. Bent plates or inverted channels are not acceptable. Base plate shall have a raised lip with a 3/4-inch plugged tap for drainage and holes of sufficient size and number for grouting.

f. The pump shaft shall be of ample size to transmit the maximum torque required under specified operating conditions, and to withstand continuously all stresses resulting from supported weights, thrusts and starting, including across-the-line motor starting. The shaft material shall be high strength steel.

g. The pump shall be provided with an ASTM A536 ductile rotor housed in an ASTM A536 ductile iron replaceable liner. The rotor vanes shall be non-metallic. O-rings shall be viton.

h. All shop testing shall be in accordance with HI 3.6.

i. The gear reducer shall be rated in accordance with AGMA 6013 and sized appropriately for the pump power requirements. The gears shall be helical and pinion type, immersed in oil and supported by ball bearings at both ends. The gears and shafts shall be alloy steel. The housing shall be ductile iron.

2.3.3 Exterior Topcoat

Manufacturer's standard exterior topcoat shall be factory applied.

2.3.4 Motor

Provide the pump with a motor meeting the requirements of paragraph 2.2.7 Motors.

2.4 STRIPPER PUMPS (STP-1 AND STP-2)

The pump for this service shall be sliding vane, positive displacement rotary design, with side suction and discharge. The pump shall be designed and constructed in accordance with API Std 676 and be suitable for F-24 fuel service. Whenever the information contained herein conflicts with said standard, the information herein shall govern.

2.4.1 Capacity

Pump No.	Fluid	Capacity	Total Dynamic Discharge Head	Rated Total Motor Power
STP-1	F-24	200 gpm	265 feet	20 HP
STP-2	F-24	200 gpm	265 feet	20 HP

Overall efficiency at design conditions of pump, gear reducer, and driver connected (wire-to-water) shall be a minimum of 80 percent, or best available by manufacturer. The available net positive suction head (NPSHA) for the fluid is 22 feet.

2.4.2 General Requirements

a. Pump, motor, gear reducer, couplings, and base plate shall be provided as a complete unit as specified herein. The pump shall have left-hand rotation. The pump design shall allow removal and replacement of the vanes, rotor, and internal parts without removing the pump from the piping system.

b. The pump casing shall be thermal shock resistant ASTM A536 ductile iron with drain plugs. End connections shall be ASME B16.5, Class 150, flat face flanges. The casing and pump shall be designed for a maximum working pressure of 250 psig at the operating temperature.

c. The pump shall be provided with external bearings. The bearings shall be roller type, grease lubricated. The bearings shall be isolated from the pumpage by cartridge type mechanical seals. The mechanical seal rotating face shall be carbon and the stationary face shall be silicone carbide. The O-ring seals shall be viton.

d. The pump casing shall be manufactured with a built-in relief valve capable of maintaining a constant discharge pressure with the full capacity of the pump being bypassed. The relief valve set pressure shall be adjustable with an initial setting of 115 psi.

e. The pump shall be mounted on a fabricated base plate. The base plate shall be fabricated steel channels or I-beams, properly cross-braced and welded to steel plate suitable for mounting and maintaining alignment of pump, gear reducer, couplings, coupling guards, and motor. Bent plates or inverted channels are not acceptable. Base plate shall have a raised lip with a 3/4-inch plugged tap for drainage and holes of sufficient size and number for grouting.

f. The pump shaft shall be of ample size to transmit the maximum torque required under specified operating conditions, and to withstand continuously all stresses resulting from supported weights, thrusts and starting, including across-the-line motor starting. The shaft material shall be high strength steel.

g. The pump shall be provided with ASTM A536 ductile iron rotor housed in an ASTM A536 ductile iron replaceable liner. The rotor vanes shall be non-metallic. O-rings shall be viton.

h. All shop testing shall be in accordance with HI 3.6.

i. The gear reducer shall be rated in accordance with AGMA 6013 and sized appropriately for the pump power requirements. The gears shall be helical and pinion type, immersed in oil and supported by ball bearings at both ends. The gears and shafts shall be alloy steel. The housing shall be ductile iron.

2.4.3 Exterior Coating

Manufacturer's standard exterior topcoat shall be factory applied.

2.4.4 Motor

Provide the pump with a motor meeting the requirements of paragraph 2.2.7 Motors.

2.5 CORROSION INHIBITOR/LUBRICITY IMPROVER (CI/LI) ADDITIVE OFFLOAD PUMP (P-7)

The pump for this service shall be sliding vane, positive displacement rotary design, with side suction and discharge. The pumps shall be designed and constructed in accordance with API Std 676 and be suitable for CI/LI additive service. Whenever the information contained herein conflicts with said standard, the information herein shall govern.

2.5.1 Capacity

Pump No.	Fluid	Capacity	Total Dynamic Discharge Head	Motor Power
P-7	CI/LI	200 gpm	80 feet	10 HP

Overall efficiency at design conditions of pump, gear reducer, and driver connected (wire-to-water) shall be a minimum of 75 percent, or best available by manufacturer. The available net positive suction head (NPSHA) for the fluid is 20 feet.

2.5.2 General Requirements

a. Pump, motor, gear reducer, couplings, and base plate shall be provided as a complete unit as specified herein. The pump shall have right-hand rotation with right side discharge nozzle. The pump design shall allow removal and replacement of the vanes, rotor, and internal parts without removing the pump from the piping system.

b. The pump casing shall be thermal shock resistant ASTM A536 ductile iron with drain plugs. End connections shall be ASME B16.5, Class 150, flat face flanges. The casing and pump shall be designed for a maximum working pressure of 250 psig at the operating temperature.

c. The pump shall be provided with external bearings. The bearings shall be roller type, grease lubricated. The bearings shall be isolated from the pumpage by cartridge type mechanical seals. The mechanical seal rotating face shall be carbon and the stationary face shall be silicone carbide. The O-rings shall be viton.

d. The pump casing shall be manufactured with a built-in relief valve capable of maintaining a constant discharge pressure with the full capacity of the pump being bypassed. The relief valve set pressure

shall be adjustable with an initial setting of 50 psi.

e. The pump shall be mounted on a fabricated base plate. The base plate shall be fabricated steel channels or I-beams, properly cross-braced and welded to steel plate suitable for mounting and maintaining alignment of pump, gear reducer, couplings, coupling guards, and motor. Bent plates or inverted channels are not acceptable. Base plate shall have a raised lip with a 3/4-inch plugged tap for drainage and holes of sufficient size and number for grouting.

f. The pump shaft shall be of ample size to transmit the maximum torque required under specified operating conditions, and to withstand continuously all stresses resulting from supported weights, thrusts and starting, including across-the-line motor starting. The shaft material shall be high strength steel.

g. The pump shall be provided with ASTM A536 ductile iron rotor housed in an ASTM A536 ductile iron replaceable liner. The rotor vanes shall be non-metallic. O-rings shall be viton.

h. All shop testing shall be in accordance with HI 3.6.

i. The gear reducer shall be rated in accordance with AGMA 6013 and sized appropriately for the pump power requirements. The gears shall be helical and pinion type, immersed in oil and supported by ball bearings at both ends. The gears and shafts shall be alloy steel. The housing shall be ductile iron.

2.5.3 Exterior Coating

Carbon steel surfaces shall be cleaned, prepared, and coated in accordance with Section 09 97 13.27 EXTERIOR COATING OF STEEL STRUCTURES.

2.5.4 Motors

Provide the pump with a motor meeting the requirements of paragraph 2.2.7 Motors.

2.6 STATIC DISAPATER (SDA) ADDITIVE OFFLOAD PUMP (P-8)

The pump for this service shall be sliding vane, positive displacement rotary design, and side suction and discharge. The pumps shall be designed and constructed in accordance with API Std 676 and be suitable for SDA additive service. Whenever the information contained herein conflicts with said standard, the information herein shall govern.

2.6.1 Capacity

Pump No.	Fluid	Capacity	Total Dynamic Discharge Head	Motor Power
P-8	SDA	25 gpm	86 feet	1 HP

Overall efficiency at design conditions of pump, gear reducer, and driver connected (wire-to-water) shall be a minimum of 85 percent, or best available by manufacturer. The available net positive suction head (NPSHA) for the fluid is 25 feet.

2.6.2 General Requirements

a. Pump, motor, gear reducer, couplings, and base plate shall be provided as a complete unit as specified herein. The pump shall have left-hand rotation. The pump design shall allow removal and replacement of the vanes, rotor, liner, and internal parts without removing the pump from the piping system.

b. The pump casing shall be thermal shock resistant ASTM A743/A743M, 316 stainless steel with drain plugs. End connections shall be ASME B16.5, Class 150, flat face flanges. The casing and pump shall be designed for a maximum working pressure of 175 psig at operating temperature.

c. The pump shall be provided with external ball bearings. The bearings shall be single row, grease lubricated. The bearings shall be isolated from the pumpage by mechanical seals. The mechanical seal rotating face shall be carbon and the stationary face shall be ceramic. The O-ring seals shall be viton.

d. The pump casing shall be manufactured with a built-in relief valve capable of maintaining a constant discharge pressure with the full capacity of the pump being bypassed. The relief valve set pressure shall be adjustable with an initial setting of 25 psi.

e. The pump shall be mounted on a fabricated base plate. The base plate shall be fabricated steel channels or I-beams, properly cross-braced and welded to steel plate suitable for mounting and maintaining alignment of pump, gear reducer, couplings, coupling guards, and motor. Bent plates or inverted channels are not acceptable. Base plate shall have a raised lip with a 3/4-inch plugged tap for drainage and holes of sufficient size and number for grouting.

f. The pump shaft shall be of ample size to transmit the maximum torque required under specified operating conditions, and to withstand continuously all stresses resulting from supported weights, thrusts and starting, including across-the-line motor starting. The shaft material shall be high strength steel.

g. The pump shall be provided with an ASTM A743/A743M stainless rotor housed in an ASTM A743/A743M stainless replaceable liner. The rotor vanes shall be non-metallic. O-rings shall be viton.

h. The gear reducer shall be rated in accordance with AGMA 6013 and sized appropriately for the pump power requirements. The gears shall be helical and pinion type, immersed in oil and supported by ball bearings at both ends. The gears and shafts shall be alloy steel. The housing shall be ductile iron.

2.6.3 Exterior Coating

Carbon steel surfaces shall be cleaned, prepared, and coated in accordance with Section 09 97 13.27 EXTERIOR COATING OF STEEL STRUCTURES.

2.6.4 Motor

Provide the pump with a motor meeting the requirements of paragraph 2.2.7 Motors.

PART 3 EXECUTION

3.1 PREPARATION FOR SHIPMENT

3.1.1 Rust Preventative

Exterior machine surfaces shall be coated with a rust preventative. Pumps shall be disassembled after the shop running tests and inspected, and internal parts shall be coated with a rust preventative before reassembling.

3.1.2 Closure of Openings

Threaded openings shall be provided with metallic plugs or caps. Flanges shall be gasketed with rubber and closed with 3/16-inch thick plate of the same outside diameter as the match flange. A minimum of four full-diameter bolts shall hold closure in place.

3.1.3 Assembly

Pumps shall be shipped assembled or a field service engineer shall be furnished to supervise the field assembly at no additional cost to the Government.

3.1.4 Bracing

Each unit shall be suitably prepared for shipment, supported and braced, with auxiliary equipment secured to prevent damage during shipment.

3.1.5 Vapor Inhibiting Wraps

Exposed shafts and shaft couplings shall be wrapped with waterproof moldable waxed cloth or vapor inhibitor paper. The seams shall be sealed with adhesive tape.

3.1.6 Shipping Identification

Each pump shall be identified with a metal tag showing the item number. Material shipped separately shall be marked with a metal tag indicating the item number for which it is intended.

3.2 INSTALLATION

Install equipment and components true to line, level and plumb, and measured from established benchmarks or reference points. Follow manufacturer's recommended practices for equipment installation. Provide required clearances between equipment components. Equipment, apparatus, and accessories requiring normal servicing or maintenance shall be easily accessible.

3.2.1 Anchoring

Anchor equipment in place as indicated on the drawings or per manufacturer's recommendations. Minimum anchor bolt size is 5 inch. Check alignment of anchor bolts and/or bolt holes before installing equipment and clean-out associated sleeves. Do not cut bolts due to misalignment. Notify the Contracting Officer of errors and obtain the Contracting Officer's acceptance before proceeding with corrections. Cut anchor bolts of excess length to the appropriate length without damage to threads.

3.2.2 Grouting

Equipment which is anchored to a pad shall be grouted in place. Before setting equipment in place and before placing grout, clean surfaces to be in contact with grout, including fasteners and sleeves. Remove standing water, debris, oil, rust, coatings and other materials which impair bond. Clean contaminated concrete by grinding. Clean metal surfaces of mill scale and rust by hand or power tool methods. Provide formwork for placing and retaining grout. Grout to be non-metallic, non-shrink, fluid precision grout of a hydraulic cementitious system with graded and processed silica aggregate, portland cement, shrinkage compensating agents, plasticizing and water reducing agents; free of aluminum powder agents, oxidizing agents and inorganic accelerators, including chlorides; proportioned, pre-mixed and packaged at factory with only the addition of water required at the project site. Grouting to meet requirements of ASTM C827/C827M. Perform all grouting in accord with equipment manufacturer's and grout manufacturer's published specifications and recommendations.

3.2.3 Leveling and Aligning

Level and align equipment in accord with respective manufacturer's published data. Do not use anchor bolt, jack-nuts or wedges to support, level or align equipment. Install only flat shims for leveling equipment. Place shims to fully support equipment. Wedging is not permitted. Shims to be fabricated flat carbon steel units of surface configuration and area not less than equipment bearing surface. Shims to provide for full equipment support. Shim to have smooth surfaces and edges, free from burrs and slivers. Flame or electrode cut edges not acceptable.

3.2.4 Direct Drives

Alignment procedure follows.

3.2.4.1 Rotation Direction and Speed

Check and correct drive shaft rotation direction and speed.

3.2.4.2 End Play

Run drive shafts at operational speed. Determine whether axial end play exists. Run drive shaft at operational speed and mark drive shaft axial position when end play exists. Block drive shaft in operating position when aligning drive shaft with driven shaft.

3.2.4.3 Shaft Leveling and Radial Alignment

Check shaft leveling by placing a straightedge across the two coupling half faces in both horizontal and vertical planes.

3.2.4.4 Angular Alignment and End Clearance

Pump alignment shall be accomplished by the factory technician or a millwright trained in pump alignment, and with the use of dial gauges or laser alignment equipment.

3.2.4.5 Final Recheck

Check adjustments with dial indicator after completing recheck. Align shafts within 0.002-inch tolerance, except as otherwise required by more

stringent requirements of equipment manufacturer.

3.2.5 Start-up Representative

A manufacturer's field service representative shall be provided at no additional cost to the Government to check the pumps for proper operation prior to start-up and also to witness, as a minimum, the first two days of operation. Any additional time required due to delays or corrections shall be provided at no additional cost to the Government. The manufacturer's field service representative shall also instruct the required personnel in the proper operation and maintenance of the pumps.

-- End of Section --

SECTION 33 52 80

LIQUID FUELS PIPELINE COATING SYSTEMS
02/10

PART 1 GENERAL

1.1 REFERENCES

The publications listed below form a part of this specification to the extent referenced. The publications are referred to within the text by the basic designation only.

AMERICAN WATER WORKS ASSOCIATION (AWWA)

AWWA C203	(2008) Coal-Tar Protective Coatings and Linings for Steel Water Pipelines - Enamel and Tape - Hot-Applied
AWWA C209	(2013) Cold-Applied Tape Coatings for the Exterior of Special Sections, Connections and Fitting for Steel Water Pipelines
AWWA C210	(2007) Standard for Liquid Epoxy Coating Systems for the Interior and Exterior of Steel Water Pipelines
AWWA C213	(2007) Fusion-Bonded Epoxy Coating for the Interior and Exterior of Steel Water Pipelines
AWWA C215	(2010) Extruded Polyolefin Coatings for the Exterior of Steel Water Pipelines
AWWA C216	(2007) Heat-Shrinkable Cross-Linked Polyolefin Coatings for the Exterior of Special Sections, Connections, and Fittings for Steel Water Pipelines
AWWA C217	(2009) Petrolatum and Petroleum Wax Tape Coatings for the Exterior of Connections and Fittings for Steel Water Pipelines

ASTM INTERNATIONAL (ASTM)

ASTM D3276	(2007) Painting Inspectors (Metal Substrates)

INTERNATIONAL ORGANIZATION FOR STANDARDIZATION (ISO)

ISO 9001	(2008; Corr 1 2009) Quality Management Systems- Requirements

NACE INTERNATIONAL (NACE)

NACE RP0402	(2002) Field-Applied Fusion-Bonded Epoxy (FBE) Pipe Coating Systems for Girth Weld Joints: Application, Performance, and Quality Control

THE SOCIETY FOR PROTECTIVE COATINGS (SSPC)

SSPC PA 1	(2000; E 2004) Shop, Field, and Maintenance Painting of Steel
SSPC QP 1	(1998; E 2004) Standard Procedure for Evaluating Painting Contractors (Field Application to Complex Industrial Structures)
SSPC QP 3	(2010) Standard Procedure for Evaluating Qualifications of Shop Painting Applicators
SSPC QP 5	(1999; E 2004) Standard Procedure for Evaluating the Qualifications of Coating and Lining Inspection Companies
SSPC QS 1	(2004) Standard Procedure for Evaluating a Contractor's Advanced Quality Management System
SSPC SP 10/NACE No. 2	(2007) Near-White Blast Cleaning
SSPC SP COM	(2004) Surface Preparation Commentary for Steel and Concrete Substrates
SSPC VIS 1	(2002; E 2004) Guide and Reference Photographs for Steel Surfaces Prepared by Dry Abrasive Blast Cleaning

U.S. NATIONAL ARCHIVES AND RECORDS ADMINISTRATION (NARA)

29 CFR 1910.1000	Air Contaminants
29 CFR 1910.134	Respiratory Protection

1.2 SYSTEM DESCRIPTION

This section specifies the requirements for exterior coating of aboveground and buried, carbon steel, liquid fuel pipelines. The exterior coating system for aboveground pipelines is specified with the same requirements as the exterior coating system for the exterior of fuel tanks, Section 09 97 13.27 EXTERIOR COATING OF STEEL STRUCTURES. The exterior coating system for buried pipelines is either extruded polyolefin system or fusion bonded epoxy coating.

1.3 SUBMITTALS

Government approval is required for submittals with a "G" designation. Submittals not having a "G" designation are for Contractor Quality Control approval only. The following shall be submitted in accordance with Section 01 33 00 SUBMITTAL PROCEDURES:

SD-03 Product Data

External Pipe Coating; G

Field-Applied External Pipe Coating; G

Field-Applied Coating for Piping Over Water

SD-06 Test Reports

Qualification Testing of Shop-Applied External Pipe Coating

Qualification Testing of Field-Applied External Pipe Coating

Inspection Report Forms

Daily Inspection Reports

SD-07 Certificates

Contract Errors, Omissions, and Other Discrepancies

Corrective Action Procedures

Coating Work Plan

Qualifications of Certified Industrial Hygienist (CIH)

Qualifications of Pipe Coating Shop

Qualifications of Certified Protective Coatings Specialist (PCS)

Qualifications of Coating Inspection Company for Field Coating

Qualifications of Coating Inspector for Field Coating

Qualifications Of Individuals Performing Abrasive Blasting for Field Coating

Qualifications of Individuals Performing Coating Application for Field Coating

Qualifications of Individuals Operating Plural Component Equipment (Pump Tenders) for Field Coating

Qualifications of Coating Contractors

SD-11 Closeout Submittals

Inspection Logbook

1.4 QUALITY ASSURANCE

1.4.1 Contract Errors, Omissions, and Other Discrepancies

Submit all errors, omissions, and other discrepancies in contract documents to the Contracting Officer within 30 days of contract award for all work covered in this Section, other than the work that will not be uncovered until a later date. All such discrepancies shall be addressed and resolved, and the Coating Work Plan modified, prior to beginning the Initial and Follow-Up phases of work. Discrepancies that become apparent only after work is uncovered shall be identified at the earliest discoverable time and submitted for resolution. Schedule time (Float) should be built into the project schedule at those points where old work is

to be uncovered or where access is not available during the first 30 days after award, to allow for resolution of contract discrepancies.

1.4.2 Corrective Action (CA)

CA shall be included in the Quality Control Plan.

1.4.2.1 Corrective Action Procedures

Develop procedures for determining the root cause of each non-compliance, developing a plan to eliminate the root cause so that the non-compliance does not recur, and following up to ensure that the root cause was eliminated. Develop Corrective Action Request (CAR) forms for initiating CA, and for tracking and documenting each step.

1.4.2.2 Implement Corrective Action

The Contractor shall take action to identify and eliminate the root cause of each non-compliance so as to prevent recurrence. These procedures shall apply to non-compliance in the work, and to non-compliance in the QC System. Corrective actions shall be appropriate to the effects of the non-compliance encountered. Each CAR shall be serialized, tracked in a Log to completion and acceptance by the Contracting Officer, and retained in project records. The Corrective Action Log, showing status of each CAR, shall be submitted to the Contracting Officer monthly. A CAR may be initiated by either the Contractor or the Contracting Officer. The Contracting Officer must approve each CAR at the root cause identification stage, the plan for elimination stage, and the close out stage after verification that the root cause has been eliminated.

1.4.3 Coating Work Plan

Provide procedures for reviewing contract documents immediately after award to identify errors, omissions, and discrepancies so that any such issues can be resolved prior to project planning and development of detailed procedures.

Provide procedures for verification of key processes during Initial Phase to ensure that contract requirements can be met. Key processes shall include surface preparation, coating application and curing, inspection, and documentation, and any other process that might adversely impact orderly progression of work.

Provide procedures for all phases of coating operations, including planned work, rework, repair, inspection, and documentation. Address mobilization and setup, surface preparation, coating application, coating initial cure, tracking and correction of non-compliant work, and demobilization. Coordinate work processes with health and safety plans and confined space entry plans. For each process, provide procedures that include appropriate work instructions, material and equipment requirements, personnel qualifications, controls, and process verification procedures. Provide procedures for inspecting work to verify and document compliance with contract requirements, including inspection forms and checklists, and acceptance and rejection criteria.

Provide procedures for correcting non-compliant work. Detailed procedures are required in advance to avoid delays in meeting overcoat windows as well as to avoid delays in production. Provide procedures for repairing defects in the coating film, such as runs, drips, sags, holidays, overspray, as

well as how to handle correct coating thickness non-compliance, any other areas of repair or rework that might be adversely affected by delays in preparing and approving new procedures.

If a procedure is based on a proposed or approved request for deviation, the deviation shall be referenced. Changes to procedures shall be noted by submittal number and date approved, clearly delineating old requirements and new requirements, so that the records provide a continuous log of requirements and procedures.

1.4.4 Qualifications

The qualifications specified in this paragraph must be met throughout the duration of this contract. No work that is subject to specified qualifications shall be provided by personnel or corporate entities unless all specified qualifications are met.

1.4.4.1 Qualifications of Certified Industrial Hygienist (CIH)

Submit name, address, telephone number, FAX number, and e-mail address of the independent third party CIH. Submit documentation that hygienist is certified by the American Board of Industrial Hygiene in comprehensive practice, including certification number and date of certification/recertification. Provide evidence of experience with hazards involved in industrial coating application work.

1.4.4.2 Qualifications of Certified Protective Coatings Specialist (PCS)

Submit name, address, telephone number, FAX number, and e-mail address of the independent third party PCS. Submit documentation that specialist is certified by SSPC: The Society for Protective Coatings (SSPC) as a PCS, including certification number and date of certification/recertification. If the PCS is employed by the same coating inspection company to which the coating inspector is employed, this does not violate the independent third-party requirements. The PCS shall not be the designated coating inspector.

1.4.4.3 Qualifications of Coating Inspection Company for Field Coating

Submit documentation that the selected coating inspection company is certified by SSPC to the requirements of SSPC QP 5 prior to contract award. The coating inspection company must remain so certified for the duration of the project.

1.4.4.4 Qualifications of Coating Inspector for Field Coating

Submit documentation that each coating inspector is employed, and qualified to SSPC QP 5, Level III, by the selected coating inspection company.

1.4.4.5 Qualifications Of Individuals Performing Abrasive Blasting for Field Coating

All individuals performing abrasive blasting shall be certified by SSPC to the SSPC C-7 Dry Abrasive Blaster Qualification Program, and shall remain certified during the entire period of coating application. Submit name, address, telephone number, and evidence of certification of each person that will be performing abrasive blasting.

This requirement applies to all manual abrasive blasting performed in shop

and field locations. This requirement does not apply to automated abrasive blasting performed in the shop.

1.4.4.6 Qualifications of Individuals Performing Coating Application for Field Coating

All individuals performing coating application shall be certified by SSPC to either the SSPC C-12 Marine/Industrial Airless Spray Program or to the SSPC C-15 Plural Component Spray Program; Spray Painter Category, and shall remain certified during the entire period of coating application. Submit name, address, telephone number, and evidence of certification of each person that will be performing coating application by any method.

1.4.4.7 Qualifications of Individuals Operating Plural Component Equipment (Pump Tenders) for Field Coating

All individuals operating plural component equipment shall be certified by SSPC to the SSPC C-15 Plural Component Spray Program; Equipment Operator Category, and shall remain certified during the entire period of coating application. Submit name, address, telephone number, and evidence of certification of each person that will be operating plural component equipment.

1.4.4.8 Qualifications of Pipe Coating Shop

Each shop that applies coatings to pipe shall be certified to either ISO 9001 or SSPC QP 3, Class A prior to contract award.

1.4.4.9 Qualifications of Coating Contractors for Field Coating

All Contractors and Subcontractors that perform surface preparation or coating application shall be certified to either ISO 9001 or SSPC QP 1 and SSPC QS 1 prior to contract award.

1.4.5 Protective Coating Specialist (PCS)

The PCS shall be considered a QC Specialist and shall report to the QC Manager, as specified in Section 01 45 00.00 20 NAVFAC QUALITY CONTROL. The PCS shall approve all submittals prior to submission to the QC Manager for approval or submission to the government for approval.

1.4.6 Pre-Application Meeting For Field Coating

After approval of submittals but prior to the initiation of coating work, Contractor representatives, including at a minimum, project superintendent and QC manager, paint foreman, coating inspector, and PCS shall have a pre-application coating preparatory meeting. This meeting shall be in addition to the pre-construction conference. Specific items addressed shall include: corrective action requirements and procedures, coating work plan, safety plan, coordination with other Sections, inspection standards, inspection requirements and tools, test procedures, environmental control system, safety plan, and test logs. Notify Contracting Officer at least ten days prior to meeting.

1.5 DELIVERY AND STORAGE

Ship, store, and handle materials in accordance with SSPC PA 1, applicable standards, and as modified in this Section. Maintain temperature in storage spaces between 40 and 75 degrees F, and air temperature more than 5

degrees F above the dew-point at all times. Inspect materials for damage and return non-compliant materials to manufacturer. Remove materials with expired shelf life from government property immediately and notify the Contracting Officer. Expired materials may be returned to manufacturer, tested, and if compliant, issued a shelf life extension.

1.6 COATING HAZARDS

Ensure that employees are trained in all aspects of the safety plan. Specified coatings may have potential health hazards if ingested or improperly handled. The coating manufacturer's written safety precautions shall be followed throughout mixing, application, and curing of the coatings. During tank cleaning, cleanup, surface preparation, and paint application phases, ensure that employees are protected from toxic and hazardous chemical agents which exceed concentrations in 29 CFR 1910.1000. Comply with respiratory protection requirements in 29 CFR 1910.134. The CIH shall approve work procedures and personal protective equipment.

1.7 JOB SITE REFERENCES - SHOP

Make available to the Contracting Officer a copy of each standard to which the shop will be applying coating under this Section.

1.8 JOB SITE REFERENCES - FIELD

Make available to the Contracting Officer at least one copy each of AWWA C203, AWWA C209, AWWA C210, AWWA C215, AWWA C216, AWWA C217, ISO 9001, SSPC PA 1, SSPC QP 1, SSPC QP 3, SSPC QS 1, SSPC SP COM, SSPC SP 10/NACE No. 2, and an SSPC Certified Contractor Evaluation Form at the job site.

PART 2 PRODUCTS

2.1 SHOP-APPLIED COATING FOR BURIED PIPING

2.1.1 External Pipe Coating

Fusion-Bonded Epoxy Coating: AWWA C213, minimum 15 mils, maximum 20 mils.

2.1.2 Field Applied Tape Wrap Coating

Apply polyethylene tape wrap minimum 35 mils at all soil to air interface locations, pipe weld joints, and coating holidays. Apply joint wrap tape in a spiral fashion with 50 percent overlap.

2.2 SOURCE QUALITY CONTROL

2.2.1 Test Requirements

Qualification testing of coating materials and coating system performance requirements shall be based on laboratory testing of identical materials used in production, tested within the last two years. All required and optional tests shall be performed. Acceptance of each batch of production coating materials may be based on laboratory testing or manufacturer's certificate of conformity.

Acceptance testing of Fusion Bonded Epoxy coated pipe shall be based on all required and optional production verification testing required by AWWA C213. Perform optional production verification testing described in paragraph

OPTIONAL COATING PERFORMANCE TESTING OF COATED PIPE of AWWA C213, including cross-section porosity, interface porosity, thermal analysis (DSC), permanent strain (bendability), and interfacial contamination. Perform production verification testing on a minimum of one pipe joint in the first half hour of production each day, and on a minimum of one pipe joint in the last half hour of production each day. Perform additional testing as required to segregate any non-compliant material. Testing may be performed using qualified in-house personnel and facilities, or by independent laboratory. Submit results of tests as proof of compliance. Document compliance with the approved Coating Work Plan.

2.2.2 Field-Applied Coating for Piping Over Water

For all aboveground piping located directly over water or in splash zone apply a marine grade petroleum tape coating system comprised of a primer and tape wrap suitable for salt water exposure. Piping surface shall be prepared per manufacturer's recommendation. Coating system shall be UV resistant. Petroleum tape coating system shall be extended on piping to a point of 6-inches above concrete deck.

2.2.3 Coating Inspector for Shop Coating

The coating inspector shall be the shop Quality Manager or appropriate designee. The coating inspector shall be considered a QC Specialist and shall report to the prime Contractor's QC Manager, as specified in Section 01 45 00.00 20 NAVFAC QUALITY CONTROL. The Coating Inspector shall be present during all pre-preparation testing, surface preparation, coating application, initial cure of the coating system, and during all coating repair work required of the shop. The Coating Inspector shall provide complete documentation of conditions and occurrences on the job site, and be aware of conditions and occurrences that are potentially detrimental to the coating system.

2.2.4 Shop Inspection

2.2.4.1 Inspection Requirements

Provide all tools and instruments required to perform the required testing, as well as any tools or instruments that the inspector considers necessary to perform the required inspections and tests. Document each inspection and test, including required hold points and other required inspections and tests, as well as those inspections and tests deemed prudent from on-site evaluation to document a particular process or condition, as follows:

a. Location or area;

b. Purpose (required or special);

c. Method;

d. Criteria for evaluation;

e. Results;

f. Determination of compliance;

g. List of required rework;

h. Observations.

Collect and record Environmental Conditions as described in ASTM D3276 on a 24 hour basis, from beginning of surface preparation through initial curing of coating, as follows:

a. During surface preparation, every two hours or when changes occur;

b. During coating application and the first four days of initial cure, every hour, or when changes occur;

c. Note location, time, and temperature of the highest and lowest surface temperatures each day;

d. Use a non-contact thermometer to locate temperature extremes, then verify with contact thermometers.

Document all equipment used in inspections and testing, including manufacturer, model number, serial number, last calibration date and future calibration date, and results of on-site calibration performed.

Document Contractors compliance with the approved Coating Work Plan.

2.2.4.2 Inspection Report Forms

Develop project-specific report forms as required to report measurements, test results, and observations being complete and conforming to contract requirements. This includes all direct requirements of the contract documents and indirect requirements of referenced documents. Show acceptance criteria with each requirement and indication of conformity of each inspected item. The data may be in any format, but must be legible and presented so that entered data can be quickly compared to the appropriate requirement.

2.2.4.3 Daily Inspection Reports

Submit one copy of daily inspection report completed each day when performing work under this Section, to the Contracting Officer. Note all non-compliance issues, and all issues that were reported for rework in accordance with QC procedures of Section 01 45 00.00 20 NAVFAC QUALITY CONTROL. Each report shall be signed by the coating inspector and the QC Manager. Submit report within 24 hours of date recorded on the report.

2.2.4.4 Inspection Equipment

All equipment shall be in good condition, operational within its design range, and calibrated as required by the specified standard for use of each device.

PART 3 EXECUTION

3.1 FIELD EXTERIOR COATING OF ABOVEGROUND PIPING

Coat aboveground piping in accordance with Section 09 97 13.27 EXTERIOR COATING OF STEEL STRUCTURES.

3.2 FIELD REPAIRS TO EXTERNAL COATING OF BURIED PIPING

3.2.1 Field-Applied External Pipe Coating

Use one or more of the following repair methods, as modified herein, to repair shop applied coatings and coat external girth welds:

a. Fusion-Bonded Epoxy (FBE) Coating: NACE RP0402, coating material to be same as applied to pipe in shop.

b. Liquid-Epoxy Coating System: AWWA C210.

c. Petrolatum field applied Tape Coating.

3.2.2 Surface Preparation

Prepare girth welds, and repairs to bare steel, to SSPC SP 10/NACE No. 2 immediately prior to coating application. Verify that prepared surfaces comply with SSPC VIS 1 at time of coating application. All other surfaces shall be prepared in accordance with the appropriate coating standard referenced herein.

Block or suspended pipeline at a height that will allow the blast nozzle to be perpendicular to the surface being blasted, and at the proper standoff distance, at all times.

3.2.3 Soluble Salt Testing

3.2.3.1 Test Kit for Measuring Chloride, Sulfate and Nitrate Ions on Steel and Coated Surfaces

Provide test kits called CHLOR*TEST CSN Salts, as manufactured by CHLOR*RID International Inc. of Chandler, Arizona (www.chlor-rid.com) or equal. An "equal" test kit shall meet the following requirements:

a. Kit contains all materials, supplies, tools and instructions for field testing and on-site quantitative evaluation of chloride, sulfate and nitrate ions;

b. Kit extract solution is acidic, factory pre-measured, pre-packaged, and of uniform concentration;

c. Kit components and solutions are mercury free and environmentally friendly;

d. Kit contains new materials and solutions for each test extraction;

e. Extraction test container (vessel, sleeve, cell. etc.) creates a sealed, encapsulated environment during salt ion extraction;

f. Test extract container is suitable for testing the following steel surfaces: horizontal (up/down configuration), vertical, flat, curved, smooth, pitted, and rough;

g. All salt ion concentrations are directly measured in micrograms per square centimeter.

3.2.3.2 Pre-Preparation Testing for Soluble Salts Contamination

Test surfaces for soluble salts, and wash as required, prior to abrasive blasting. Soluble salt testing is also required in paragraph PRE-APPLICATION TESTING FOR SOLUBLE SALTS CONTAMINATION as a final acceptance test of prepared surfaces after abrasive blasting, and successful completion of this phase does not negate that requirement. This phase is recommended since pre-preparation testing and washing are generally more advantageous than attempting to remove soluble salt contamination after abrasive blasting. Effective removal of soluble salts will require removal of any barrier to the steel surface, including rust. This procedure may necessitate combinations of wet abrasive blasting, high pressure water rinsing, and cleaning using a solution of water washing and soluble salts remover. The soluble salts remover shall be acidic, biodegradable, nontoxic, noncorrosive, and after application, will not interfere with primer adhesion. Delays between testing and preparation, or testing and coating application, may allow for the formation of new contamination. Use potable water, or potable water modified with soluble salt remover, for all washing or wet abrasive blasting. Test methods and equipment used in this phase are selected at the Contractor's discretion.

3.2.3.3 Pre-Application Testing for Soluble Salts Contamination

Test girth welds and areas to be repaired for chloride contamination using the Test Kit described in paragraph TEST KIT FOR MEASURING CHLORIDE, SULFATE AND NITRATE IONS ON STEEL AND COATED SURFACES. One or more readings greater than 3 micrograms per square centimeter of chlorides or 10 micrograms per square centimeter of sulfates or 5 micrograms per square centimeter of nitrates is evidence of soluble salt contamination. Reject contaminated surfaces, wash as discussed in paragraph PRE-PREPARATION TESTING FOR SOLUBLE SALTS CONTAMINATION, allow to dry, and re-test until all required tests show allowable results. Reblast tested and cleaned areas as required. Label all test tubes and retain for test verification.

3.2.4 Coating Application

Apply coatings in accordance with SSPC PA 1 and as specified herein. Apply coatings to surfaces that meet all stated surface preparation requirements.

3.2.5 Final Inspection of Pipeline Prior to Burial

Verify that all surfaces of the pipeline are holiday-free at time of placement of backfill over pipe. Use holiday inspection requirements and acceptance criteria of the standards applicable to the coatings being tested.

3.3 PROJECT IDENTIFICATION

At the completion of the work, affix pertinent coating data on structure at a location that is readily accessible and visible from the ground. Use either stencils or nameplates. The following list generally describes the pertinent coating data, but should be modified as required to describe the coating systems.

Date coated/accepted: _____/_____
Project Number: _____
Contractor: _____
Address: _____
Coating System

Manufacturer: _____
Surface Prep: SSPC SP ____ Profile: _____
Primer: _____ Thickness: ____
Intermediate: _____ Thickness: ____
Topcoat: _____ Thickness: ____
Total Thickness: _____

3.3.1 Stencils

Use stencils on piping 8 in or larger. Use stencils with 3/4 to one inch Helvetica style letters and acrylic stencil paint of contrasting color.

3.3.2 Nameplates

Use nameplates for piping smaller than 8 in. Construct plates of stainless steel. Install nameplates in prominent locations with nonferrous screws, nonferrous bolts, or permanent adhesive. Minimum size of nameplates shall be one by 2.5 in. Lettering shall be the normal block style with a minimum 0.25 in height. Accurately align all lettering on nameplates.

3.4 FIELD QUALITY CONTROL

For marking of surfaces, use chalk for marking bare steel, and water based markers for marking coated surfaces, and remove marks prior to coating. Do not use any wax or grease based markers, or any other markers that leave a residue or stain.

3.4.1 Coating Inspector

The coating inspector shall be considered a QC Specialist and shall report to the QC Manager, as specified in Section 01 45 00.00 20 NAVFAC QUALITY CONTROL. The Coating Inspector shall be present during all pre-preparation testing, surface preparation, coating application, initial cure of the coating system, during all coating repair work, and during completion activities as specified in Section 01 45 00.00 20. The Coating Inspector shall provide complete documentation of conditions and occurrences on the job site, and be aware of conditions and occurrences that are potentially detrimental to the coating system.The requirements for inspection listed in this Section are in addition to the QC inspection and reporting requirements specified in Section 01 45 00.00 20 NAVFAC QUALITY CONTROL.

3.4.2 Field Inspection

3.4.2.1 Inspection Requirements

Perform field inspection in accordance with ASTM D3276 and the approved Coating Work Plan. Document Contractor's compliance with the approved Coating Work Plan.

Provide all tools and instruments required to perform the required testing, as well as any tools or instruments that the inspector considers necessary to perform the required inspections and tests. Document each inspection and test, including required hold points and other required inspections and tests, as well as those inspections and tests deemed prudent from on-site evaluation to document a particular process or condition, as follows:

a. Location or area;

b. Purpose (required or special);

c. Method;

d. Criteria for evaluation;

e. Results;

f. Determination of compliance;

g. List of required rework;

h. Observations.

Collect and record Environmental Conditions as described in ASTM D3276 on a 24 hour basis, as follows:

a. During surface preparation, every two hours or when changes occur;

b. During coating application and the first four days of initial cure, every hour, or when changes occur;

c. Note location, time, and temperature of the highest and lowest surface temperatures each day;

d. Use a non-contact thermometer to locate temperature extremes, then verify with contact thermometers.

Document all equipment used in inspections and testing, including manufacturer, model number, serial number, last calibration date and future calibration date, and results of on-site calibration performed.

Document Contractors compliance with the approved Coating Work Plan.

3.4.2.2 Inspection Report Forms

Develop project-specific report forms as required to report measurements, test results, and observations being complete and conforming to contract requirements. This includes all direct requirements of the contract documents and indirect requirements of referenced documents. Show acceptance criteria with each requirement and indication of conformity of each inspected item. The data may be in any format, but must be legible and presented so that entered data can be quickly compared to the appropriate requirement.

3.4.2.3 Daily Inspection Reports

Submit one copy of daily inspection report completed each day when performing work under this Section, to the Contracting Officer. Note all non-compliance issues, and all issues that were reported for rework in accordance with QC procedures of Section 01 45 00.00 20 NAVFAC QUALITY CONTROL. Each report shall be signed by the coating inspector and the QC Manager. Submit report within 24 hours of date recorded on the report.

3.4.2.4 Inspection Logbook

A continuous record of all activity related to this Section shall be maintained in an Inspection Logbook on a daily basis. The logbook shall be hard or spiral bound with consecutively numbered pages, and shall be used to record all information provided in the Daily Inspection Reports, as well

as other pertinent observations and information. The Coating Inspector's Logbook that is sold by NACE is satisfactory. Submit the original Inspection Logbook to the Contracting Officer upon completion of the project and prior to final payment.

3.4.2.5 Inspection Equipment

All equipment shall be in good condition, operational within its design range, and calibrated as required by the specified standard for use of each device.

3.5 FINAL CLEANUP

Following completion of the work, remove debris, equipment, and materials from the site. Remove temporary connections to Government or Contractor furnished water and electrical services. Restore existing facilities in and around the work areas to their original condition.

-- End of Section --

SECTION 33 52 90.00 20

WELDING FOR POL SERVICE PIPING
02/10

PART 1 GENERAL

1.1 REFERENCES

The publications listed below form a part of this specification to the extent referenced. The publications are referred to within the text by the basic designation only.

AMERICAN SOCIETY FOR NONDESTRUCTIVE TESTING (ASNT)

ASNT SNT-TC-1A	(2011; Text Correction 2013) Recommended Practice for Personnel Qualification and Certification in Nondestructive Testing

AMERICAN WELDING SOCIETY (AWS)

AWS A2.4	(2012) Standard Symbols for Welding, Brazing and Nondestructive Examination
AWS A3.0M/A3.0	(2010) Standard Welding Terms and Definitions
AWS A5.1/A5.1M	(2012) Specification for Carbon Steel Electrodes for Shielded Metal Arc Welding
AWS A5.18/A5.18M	(2005) Carbon Steel Filler Metals for Gas Shielded Arc Welding
AWS A5.22/A5.22M	(2012) Specification for Stainless Steel Flux Cored and Metal Cored Welding Electrodes and Rods
AWS A5.32/A5.32M	(2011) Specification for Welding Shielding Gases
AWS A5.36/A5.36M	(2012) Specification for Carbon and Low-Alloy Steel Flux Cored Electrodes for Flux Cored Arc Welding and Metal Cored Electrodes for Gas Metal Arc Welding
AWS A5.4/A5.4M	(2012) Specification for Stainless Steel Electrodes for Shielded Metal Arc Welding
AWS A5.9/A5.9M	(2012) Specification for Bare Stainless Steel Welding Electrodes and Rods
AWS C5.5/C5.5M	(2003) Recommended Practices for Gas Tungsten Arc Welding
AWS D1.1/D1.1M	(2010; Errata 2011) Structural Welding Code - Steel
AWS D10.10/D10.10M	(1999; R 2009) Recommended Practices for

	Local Heating of Welds in Piping and Tubing
AWS D10.11M/D10.11	(2007) Guide for Root Pass Welding of Pipe Without Backing
AWS D10.12M/D10.12	(2000) Guideline for Welding Mild Steel Pipe
AWS D10.4	(1986; R 2000) Recommended Practices for Welding Austenitic Chromium-Nickel Stainless Steel Piping and Tubing
AWS QC1	(2007) Standard for AWS Certification of Welding Inspectors
AWS WHB-4.8	(1998) Welding Handbook, Volume 4 - Materials and Applications Part 2
AWS Z49.1	(2012) Safety in Welding and Cutting and Allied Processes

ASME INTERNATIONAL (ASME)

ASME B31.3	(2012) Process Piping
ASME B31.4	(2012) Pipeline Transportation Systems for Liquid Hydrocarbons and Other Liquid
ASME BPVC SEC V	(2010) BPVC Section V-Nondestructive Examination

ASTM INTERNATIONAL (ASTM)

ASTM E329	(2013b) Standard Specification for Agencies Engaged in the Testing and/or Inspection of Materials Used in Construction
ASTM E94	(2004; R 2010) Radiographic Examination

U.S. NAVAL SEA SYSTEMS COMMAND (NAVSEA)

NAVSEA T9074-AS-GIB-010/271	(1999; Notice 1) Requirements for Nondestructive Testing Methods

1.2 DEFINITIONS

Definitions shall be in accordance with AWS A3.0M/A3.0 except as follows:

a. Weld slag is defined as the crystalline residue remaining on the weld surface following a weld procedure which uses flux as a shielding method.

b. POL service piping consists of piping and components used for petroleum, oil and lubricants (POL) under pressure or gravity force including modifications to existing hydrant fueling systems.

1.3 SUBMITTALS

Government approval is required for submittals with a "G" designation; submittals not having a "G" designation are for Contractor Quality Control approval. The following shall be submitted in accordance with Section 01 33 00 SUBMITTAL PROCEDURES:

SD-01 Preconstruction Submittals

Welding procedure specification; G

Welding Operations; G

NDE Testing Procedures; G.

SD-02 Shop Drawings

POL Service Piping; G

Detail drawings showing location, length, and type of welds; and indicating preweld and postweld heat treatment and NDE as required. The drawings shall show the welding procedure specification (WPS) to be used at each weld location.

Weld Map; G

SD-06 Test Reports

Inspection Reports; G

SD-07 Certificates

Welder and welding operator performance qualification certificates. Welding inspectors and NDE personnel certificates. Qualifications of testing laboratory or the Contractor's quality assurance organization.

1.4 GENERAL REQUIREMENTS

This section covers the welding of Petroleum, Oil and Lubricant (POL) Service systems. Deviations from applicable codes, approved procedures, and approved detail drawings will not be permitted without prior written approval by the Contracting Officer. Materials or components with welds made offsite will not be accepted if the welding does not conform to the requirements of this specification, unless otherwise specified. Procedures shall be developed by the Contractor for welding all metals included in the work. Welding shall not be started until welding procedures, welders, and welding operators have been qualified. Qualification testing shall be performed by an approved testing laboratory, or by the Contractor if approved by the Contracting Officer. Costs of such testing shall be borne by the Contractor. The Contracting Officer shall be notified at least 1 week in advance of the time and place of the tests. If the Contracting Officer elects to witness the tests, the qualification tests shall be performed at or near the worksite. The Contractor shall maintain current records of the test results obtained in the welding procedure, welding operator, welder performance qualifications, and nondestructive examination (NDE) procedures readily available at the site for examination by the Contracting Officer. The procedures for making transition welds between different materials or between plates or pipes of different wall

thicknesses shall be qualified. Unless otherwise specified, the choice of welding process shall be the responsibility of the Contractor.

1.5 PERFORMANCE

The Contractor shall be responsible for the quality of all joint preparation, welding, and examination. All materials used in the welding operations shall be clearly identified and recorded. The inspection and testing defined in this specification are minimum requirements. Additional inspection and testing shall be the responsibility of the Contractor when he deems it necessary to achieve the quality required.

1.6 QUALIFICATIONS

Welding procedures, welders, and welding operators previously qualified by test may be accepted for the work without requalification, provided that all of the following conditions are fulfilled:

a. Copies of the welding procedure specifications, the welding procedure qualification record, and the welder and welding operator certifications are submitted and approved in accordance with paragraph SUBMITTALS.

b. Testing was performed by an approved testing laboratory or approved technical consultant or by the Contractor's approved quality assurance organization.

c. The welding procedures, welders, and welding operators were qualified in accordance with ASME B31.3 and ASME B31.4, and base materials, filler materials, electrodes, equipment, and processes conformed to the applicable requirements of this specification.

d. The requirements of paragraph "Renewal of Qualification" below are met and records showing name of employer and period of employment using the process for which qualified are submitted as evidence of conformance.

1.6.1 Welding Operations

The Contractor shall provide a description of how the critical welding operations will be accomplished. Provide the welding procedures to be used for each operation, the sequence of welding to minimize heat distortion, sequence of welding piping sections both in the trench and outside, machine welding if used, and multiple welders on same pipe weld.

1.6.2 Welding Procedure Specification and Qualification Records

The Contractor shall record in detail and shall qualify the Welding Procedure Specifications for every proposed welding procedure. Qualification for each welding procedure shall conform to the requirements of ASME B31.3 and ASME B31.4, and to this specification. The welding procedures shall specify back purge gas requirements, end preparation for butt welds including cleaning, alignment, and root openings. Preheat, interpass temperature control, and postheat treatment of welds shall be as required by approved welding procedures, unless otherwise indicated or specified. Copies of the welding procedure specifications and weld procedure qualification record results for each type of welding required shall be submitted in accordance with paragraph SUBMITTALS. Approval of any procedure does not relieve the Contractor of the sole responsibility for producing acceptable welds. Welding procedures shall be identified

individually and shall be referenced on the POL service piping shop drawings.

1.6.3 Welder and Welding Operator Performance

Each welder and welding operator assigned to work shall be qualified in accordance with ASME B31.3 and ASME B31.4.

1.6.3.1 Certification

Before assigning welders or welding operators to the work, the Contractor shall provide the Contracting Officer with their names together with certification that each individual is performance-qualified as specified. The certification shall state the type of welding and positions for which each is qualified, the code and welding procedure specification under which each is qualified, date qualified, and the firm and individual certifying the qualification tests. The Contractor shall provide a summary table showing all welders and the WPS with which they are qualified to weld.

1.6.3.2 Identification

Each particular weld shall be identified with the personal number, letter, or symbol assigned to each welder or welding operator. To identify welds, written records indicating the location of welds made by each welder or welding operator shall be submitted, and each welder or welding operator shall apply the personal mark adjacent to the welds using a rubber stamp or felt-tipped marker with permanent, weatherproof ink or other methods approved by the Contracting Officer that do not deform the metal. Identification by die stamps or electric etchers will not be allowed.

1.6.3.3 Renewal of Qualification

Requalification of a welder or welding operator shall be required under any of the following conditions:

a. When a welder or welding operator has not used the specific welding procedure for a period of 3 months; the period may be extended to 6 months if the welder or welding operator has been employed on another welding procedure.

b. When a welder or welding operator has not welded with any procedure during a period of 3 months, all the personal qualifications shall be considered expired, including any extension by virtue of a. above.

c. There is specific reason to question the person's ability to make welds that will meet the requirements of the specifications.

d. The welder or welding operator was qualified by an employer, other than those firms performing work under this contract, and a qualification test has not been taken within the preceding 12 months.

e. Renewal of qualification for a specific welding procedure under conditions a., b., and d., above, needs to be made on only a single test joint or pipe of a thickness, position, or material required by the welding procedure specifications to reestablish the welder's or welding operator's qualification for the previous qualification.

1.6.4 Inspection Reports

Inspection test reports shall consist of the following.

a. Records made by the AWS certified inspector for all duties performed per paragraph 4.2 of AWS QC1.

b. All NDE (radiograph, ultrasound, etc.) reports with unique weld ID for each weld tested.

c. "Weld Maps". These maps/drawings correlate the shop drawings submitted to the NDE reports. The NDE report that shows a weld number as acceptable is correlated with weld number on the drawings.

d. Provide the location of each weld, what procedure was used, which welder did the weld, the results of the visual test, and the results of the NDE.

1.6.5 Inspection and NDE Personnel

All inspection and NDE personnel shall be qualified in accordance with the following requirements. The contractor shall submit the qualifications of all the testing personnel that will perform all field tests for review by the Contracting Officer. The qualifications of all personnel on the job site that will perform welding inspections and NDE shall be submitted for approval. All inspectors and NDE personnel shall have a minimum of one (1) year experience inspecting the piping material being used and five (5) years in military or commercial aircraft hydrant fueling systems or truck fueling systems, petroleum refineries, power generating plants, or chemical process plants.

1.6.5.1 Inspector Certification

Welding inspectors shall be qualified in accordance with AWS QC1 and ASME B31.3, Chapter VI.

1.6.5.2 NDE Personnel

NDE personnel shall be certified in accordance with Chapter VI, ASME B31.3 for each NDE procedure he is required to use, and a written procedure for the control and administration of NDE personnel training, examination, and certification shall be established. The procedures shall be based on appropriate specific and general guidelines of training and experience recommended by ASNT SNT-TC-1A.

1.6.5.3 Testing Agency

The testing agency, testing laboratory, technical consultant or contractor's approved quality assurance organization shall meet the requirements of ASTM E329.

1.7 DELIVERY, STORAGE, AND HANDLING

All filler metals, electrodes, and other welding materials shall be delivered to the site in manufacturers' original packages and stored in a dry space until used. Packages shall be properly labeled and designed to give maximum protection from moisture and to insure safe handling.

1.7.1 Material Control

Materials shall be stored in a controlled access and clean, dry area that is weathertight and is maintained at a temperature recommended by the manufacturer. The materials shall not be in contact with the floor and shall be stored on wooden pallets or cribbing.

1.7.1.1 Damaged Containers

Low-hydrogen steel electrodes shall be stored in their sealed shipping container. If the seal is damaged during shipment or storage, and the damage is not immediately detected, the covered electrodes in that container shall be rebaked in accordance with the manufacturer's instructions prior to issuance or shall be discarded. If a container is damaged in storage and the damage is witnessed, the electrodes from that container shall be immediately placed in a storage oven. The storage oven temperature shall be as recommended by the manufacturer or the welding material specification.

1.7.1.2 Partial Issues

When a container of covered electrodes is opened and only a portion of the content is issued, the remaining portion shall, within the limits established by AWS D1.1/D1.1M be placed in a storage oven.

1.7.2 Damaged Materials

Materials which are damaged shall be discarded. Covered electrodes which are oil or water-soaked, dirty, or on which the flux has separated from the wire shall be discarded.

1.8 SYMBOLS

Symbols shall be in accordance with AWS A2.4.

1.9 SAFETY

Safety precautions shall conform to AWS Z49.1.

PART 2 PRODUCTS

2.1 WELDING MATERIALS

Welding materials for carbon steel and stainless steel shall comply with AWS WHB-4.8. Welding equipment, electrodes, welding wire, and fluxes shall be capable of producing satisfactory welds when used by a qualified welder or welding operator using qualified welding procedures. All field girth root pass welds shall be made with non-covered electrodes or welding wire. External welds on the pipe such as attaching pipe supports may be made with covered electrodes or welding wire. Electrodes, welding wire and/or fluxes shall be in accordance with Table 1.

TABLE I				
AWS	Process	Alloy	Consumable	Use
			Example (1)	
AWS A5.1/A5.1M	SMAW	Low Carbon	E7018, E6010	Fill
AWS A5.4/A5.4M	SMAW	Stainless	E308L, E309L	Fill
AWS A5.9/A5.9M	GTAW/GMAW	Stainless	ER308L,ER309L	Root and Fill
AWS A5.18/A5.18M	GTAW/GMAW	Low Carbon	E70S-3,E70S-6	Root and Fill
AWS A5.36/A5.36M	FCAW	Low Carbon	E71T1-1	Fill
AWS A5.22/A5.22M	GTAW/FCAW	Stainless	E308LT1-1	FCAW Fill GTAW-Root
AWS A5.32/A5.32M	GTAW/GMAW	All		Shielding Gas
Note(1): The consumable material designations shown are examples only and are not intended to limit the Contractor's selection of consumable materials.				

PART 3 EXECUTION

3.1 WELDING OPERATIONS

Welding shall be performed in accordance with qualified procedures using qualified welders and welding operators. Welding shall not be done when the quality of the completed weld could be impaired by the prevailing working or weather conditions. The Contracting Officer shall determine when weather or working conditions are unsuitable for welding. Welding of hangers, supports, and plates to structural members shall conform to Section 05 12 00 STRUCTURAL STEEL.

Welding shall be performed in accordance with ASME B31.3 and ASME B31.4 and the applicable portions of AWS D10.4; AWS D10.10/D10.10M; AWS D10.11M/D10.11; AWS D10.12M/D10.12; AWS C5.5/C5.5M

All joints unless indicated otherwise, in carbon steel, aluminum and stainless steel piping systems shall be welded. Unless otherwise approved, all girth welds shall be complete penetration groove welds made in accordance with qualified welding procedures. The root pass on stainless steel and carbon steel pipe shall be by the GMAW or GTAW process.

a. Weld Preparation shall comply with the requirements of ASME B31.3 and the qualified Welding Procedure Specification. The use of "rice paper" as purge blocks is not permitted. Contractor shall submit alternate method for approval.

b. Backing Rings. The use of backing rings for making or repairing welds will not be permitted.

3.1.1 Base Metal Preparation

Oxy-fuel cutting shall not be used on austenitic stainless steel or

nonferrous materials.

Mechanical grinding of thermal cut ends shall be used to remove the heat affected area but should be limited to maximum 1/8".

3.1.2 Weld Joint Fit-Up

Parts that are to be joined by welding shall be fitted, aligned, and retained in position during the welding operation by the use of bars, jacks, clamps, or other mechanical fixtures. End welds shall be properly aligned prior to welding in accordance with Chapter V of ASME B31.3. Welded temporary attachments shall not be used except when it is impractical to use mechanical fixtures. When temporary attachments are used, they shall be the same material as the base metal, and shall be completely removed by grinding or thermal cutting after the welding operation is completed. If thermal cutting is used, the attachment shall be cut to not less than 1/4 inch from the member and the balance removed by grinding. After the temporary attachment has been removed, the area shall be visually examined.

3.1.3 Preheat and Interpass Temperatures

Preheat temperatures shall meet the requirements specified by ASME B31.3 and ASME B31.4. However, in no case shall the preheat be below 50 degrees F for ferritic steel or austenitic stainless steel, or 32 degrees F for nonferrous alloys. The maximum interpass temperatures shall not exceed 300 degrees F for austenitic stainless steels, nickel alloys, and copper alloys; and 500 degrees F for carbon steels. Preheat techniques shall be such as to ensure that the full thickness of the weld joint preparation and/or adjacent base material, at least 3 inches in all directions, is at the specified temperature. Preheating by induction or resistance methods is preferred. When flame heating is used, only a neutral flame shall be employed. Oxy-fuel heating shall not be used on austenitic stainless steel; however, air-fuel heating is acceptable if controlled to insure that the surface temperature does not exceed 150 degrees F. Interpass temperatures shall be checked on the surface of the component within 1 inch of the weld groove and at the starting location of the next weld pass, and for a distance of about 6 inches ahead of the weld, but not on the area to be welded.

3.1.4 Production Welding Instructions

a. Welding shall not be done when the ambient temperature is lower than 0 degrees F.

b. Welding is not permitted on surfaces that are wet or covered with ice, when snow or rain is falling on the surfaces to be welded, or during periods of high winds, unless the welders and the work are properly protected.

c. Gases for purging and shielding shall be welding grade and shall have a dew point of minus 40 degrees F or lower.

d. Back purges are required for austenitic stainless steels and nonferrous alloys welded from one side and shall be set up such that the flow of gas from the inlet to the outlet orifice passes across the area to be welded. The oxygen content of the gas exiting from the purge vent shall be less than 2 percent prior to welding. The flow rate shall be that required by the approved weld procedure specification.

e. The purge on groove welds shall be maintained for at least two passes or 3/16 inch whichever is greater.

f. Removable purge dam materials shall be made of expandable or flexible plugs, such as Plexiglas, plywood (which shall be dry when used), etc. Wood dams shall be kiln-dried quality. Nonremovable purge dams and purge dam adhesives shall be made of water soluble materials. Purge dams shall not be made of polyvinyl alcohol.

g. Any welding process which requires the use of external gas shielding shall not be done in a draft or wind unless the weld area is protected by a shelter. This shelter shall be of material and shape appropriate to reduce wind velocity in the vicinity of the weld to a maximum of 5 mph (440 fpm).

h. Tack welds to be incorporated in the final welds shall have their ends tapered by grinding or welding technique. Tack welds that are cracked or defective shall be removed and the groove shall be retacked prior to welding. Temporary tack welds shall be removed, the surface ground smooth, and visually inspected. For low-alloy and hardenable high-alloy steels, the area shall be magnetic particle examination inspected.

i. Grinding of completed welds is to be performed only to the extent required for NDE, including any inservice examination, and to provide weld reinforcement within the requirements of ASME B31.3 and ASME B31.4. If the surface of the weld requires grinding, reducing the weld or base material below the minimum required thickness shall be avoided. Minimum weld external reinforcement shall be flush between external surfaces.

j. Each qualified welder shall be assigned an identification symbol. All welds shall be permanently marked with the symbol of the individual who made the weld.

k. Direct welded connection of carbon steel and stainless steel shall not be made.

3.1.5 Postweld Heat Treatment

a. Postweld heat treatment shall be performed in accordance with ASME B31.3 and ASME B31.4. Temperatures for local postweld heat treatment shall be measured continuously by thermocouples in contact with the weldment.

b. Postweld heat treatment of low-alloy steels, when required, shall be performed immediately upon completion of welding and prior to the temperature of the weld falling below the preheat temperature. However, postweld heat treatment may be postponed after the completion of the weld, if, immediately after the weld is completed, it is maintained at a minimum temperature of 300 degrees F or the preheat temperature, whichever is greater, for 2 hours per inch of weld thickness.

3.2 EXAMINATIONS, INSPECTIONS, AND TESTS

Weld inspection and NDE shall be performed by the Contractor to detect surface and internal discontinuities in completed welds. The services of a qualified commercial inspection or testing laboratory or technical

consultant meeting the requirements of paragraph "Inspection and NDE Personnel", approved by the Contracting Officer, shall be employed by the Contractor. All tack welds, weld passes, and completed welds shall be visually inspected. In addition, magnetic particle or liquid penetrant examination shall be performed on root passes. Radiographic, Liquid penetrant, Magnetic particle, or Ultrasonic examination shall be required as indicated below. When inspection and testing indicates disqualifying defects in a weld joint, the weld shall be repaired by a qualified welder in accordance with paragraph CORRECTIONS AND REPAIRS. The Contractor shall submit weld inspection and NDE field testing reports to the Contracting Officer.

The person performing the weld inspection shall perform the following:

a. Verify that the base materials and consumable welding materials conform to the specifications and that welding filler metals used are as specified for each base material.

b. Verify that the welding equipment to be used for the work is appropriate for use with the welding procedure specification and has the capability to meet the applicable requirements of the welding procedure.

c. Verify that only approved or qualified welding procedures are used for the work.

d. Verify that the edge preparation or joint geometry meet the requirements of the welding procedure and drawings.

e. Verify that the specified filler metals are used and that filler metals are maintained in proper condition, per requirements, or as recommended by the manufacturer.

f. Verify that the technique and performance of each welder, welding operator, and tack welder are as specified.

g. Verify that the work conforms to requirements of the applicable standards, drawings, or other documents.

h. Verify that the work inspected is identified and documented in accordance with specified requirements.

i. Prepare clear and concise reports and verify that records of the results of examinations are maintained.

j. Verify the approved WPS pre-heat and post heat procedures are being used.

Welders found making multiple defective welds shall be removed from the work or shall be required to be requalified in accordance with ASME B31.3.

3.2.1 Visual Inspection

Weld joints shall be inspected visually as follows:

a. Before welding - for compliance with requirements for joint preparation, alignment and fit-up, and cleanliness.

b. During welding - for cracks and conformance to the approved welding

procedure.

c. After welding - for cracks, contour and finish, bead reinforcement, undercutting, overlap, weld slag on the interior of the pipe and size of welds. Visual examination of the interior of the pipe may be performed by any of the remote means allowed by ASME BPVC SEC V, visual inspection.

3.2.2 NDE Testing Frequency

Provide 100 percent radiographic testing for all underground piping. All piping routed on pier decks, approach ramps and directly over water shall be subject to 100 percent radiographic testing of welds. Provide random radiographic testing in accordance with ASME B31.3 and ASME B31.4 for all other aboveground piping. The inspection shall include an examination of welds made by each welding operator or welder. If the testing reveals that any welds fail to meet minimum quality requirements, an additional percent of the welds in that same group shall be inspected in accordance with ASME B31.3 and ASME B31.4. If all of the additional welds inspected meet the quality requirements, the entire group of welds represented shall be accepted and the defective welds shall be repaired. If any of the additional welds inspected also fail to meet the quality requirements, that entire group of welds shall be rejected. The rejected welds shall be removed and rewelded, or the rejected welds shall be 100 percent inspected and all defective weld areas removed and rewelded.

3.2.3 NDE Testing Procedures

NDE shall be as required by ASME B31.3 and ASME B31.4 and in accordance with written procedures. Procedures for radiographic, liquid penetrant or magnetic particle tests and methods shall conform to ASME BPVC SEC V. The approved procedure shall be demonstrated to the satisfaction of the Contracting Officer. In addition to the information required in ASME BPVC SEC V, the written procedures shall include the timing of the NDE in relation to the welding operations and safety precautions.

The services of a qualified testing agency approved by the Contracting Officer shall be employed by the Contractor for testing of piping welds. Costs of testing, including retesting of repaired welds, shall be borne by the Contractor. Procedures for radiographic inspection shall be in accordance with NAVSEA T9074-AS-GIB-010/271 or ASTM E94. Weld ripples or surface irregularities that might mask or be confused with the radiographic image of any objectionable defect shall be removed by grinding or other suitable mechanical means. The weld surface shall be merged smoothly with the base metal surface.

3.2.4 Inspection and Tests by the Government

The Government may perform inspection and supplemental nondestructive or destructive tests as deemed necessary. The cost of supplemental NDE will be borne by the Government. The correction and repair of defects and the reexamination of weld repairs shall be performed by the Contractor at no additional cost to the Government. Inspection and tests will be performed as required for visual inspection and NDE, except that destructive tests may be required also. When destructive tests are ordered by the Contracting Officer and performed by the Contractor and the specimens or other supplemental examinations indicate that the materials and workmanship do not conform to the contract requirements, the cost of the tests, corrections, and repairs shall be borne by the Contractor. When the

specimens or other supplemental examinations of destructive tests indicate that materials or workmanship do conform to the specification requirements, the cost of the tests and repairs will be borne by the Government. When destructive tests are made, repairs shall be made by qualified welders or welding operators using welding procedures which will develop the full strength of the members cut. Welding shall be subject to inspection and tests in the mill, shop, and field. When materials or workmanship do not conform to the specification requirements, the work may be rejected at any time before final acceptance of the system containing the weldment.

3.3 ACCEPTANCE STANDARDS

Acceptance standards shall be in accordance with ASME B31.3 paragraph 341.3.2, Chapter VI in addition to the following specified items.

Interpretation of test results and limitations on imperfections in welds shall comply with the requirements of 100 percent radiography, per ASME B31.3, paragraph 341.3.2, Chapter VI. For stainless steel piping the evaluation shall be based on severe cyclic conditions in addition to the following-specified items.

3.3.1 Visual

The following indications are unacceptable:

Weld Slag on the interior of the pipe.

3.3.2 Magnetic Particle Examination

The following relevant indications are unacceptable:

a. Any cracks and linear indications.

b. Rounded indications with dimensions greater than 3/16 inch.

c. Four or more rounded indications in a line separated by 1/16 inch or less edge-to-edge.

d. Ten or more rounded indications in any 6 square inches of surface with the major dimension of this area not to exceed 6 inches with the area taken in the most unfavorable location relative to the indications being evaluated.

3.3.3 Liquid Penetrant Examination

Indications with major dimensions greater than 1/16 of an inch shall be considered relevant. The following relevant indications are unacceptable:

a. Any cracks or linear indications.

b. Rounded indications with dimensions greater than 3/16 inch.

c. Four or more rounded indications in a line separated by 1/16 inch or less edge-to-edge.

d. Ten or more rounded indications in any 6 square inches of surface with the major dimension of this area not to exceed 6 inches with the area taken in the most unfavorable location relative to the indications being evaluated.

3.4 CORRECTIONS AND REPAIRS

Disqualifying defects shall be removed and repaired as specified in ASME B31.3 and ASME B31.4, unless otherwise specified. Disqualifying defects discovered between weld passes shall be repaired before additional weld material is deposited. After defect removal is complete and before rewelding, the area shall be examined by the same test method which first revealed the defect to ensure that the defect has been eliminated. After rewelding, the repaired area shall be reexamined by the same test method originally used for that area. Any indication of a defect shall be regarded as a defect unless reevaluation by NDE or by surface conditioning shows that no disqualifying defects are present.

3.4.1 Defect Removal

Defective or unsound weld joints shall be corrected by removing and replacing the entire weld joint, or for the following defects corrections shall be made as follows:

a. Excessive Convexity and Overlap: Reduce by removal of excess metal.

b. Excessive Concavity of Weld, Undersized Welds, Undercutting: Clean and deposit additional weld metal.

c. Excessive Weld Porosity, Inclusions, Lack of Fusion, Incomplete Penetration: Remove defective portions and reweld.

d. Crack in Weld or Base Metal: Remove crack throughout its length, including sound weld metal for a distance of twice the thickness of the base metal or two inches, whichever is less, beyond each end of the crack, followed by the required rewelding. Complete removal shall be confirmed by magnetic particle inspection for carbon steel or liquid penetrant inspection for stainless steel. Inspection procedures shall comply with the requirements of ASME B31.3.

e. Poor Fit-Up: Cut apart improperly fitted parts, and reweld.

3.4.1.1 Methods of Defect Removal

The removal of weld metal or portions of the base metal shall be done preferably by chipping, grinding, sawing, machining, or other mechanical means. Defects also may be removed by thermal cutting techniques. If thermal cutting techniques are used, the cut surfaces shall be cleaned and smoothed by mechanical means to remove the heat affected zone. In addition, a maximum of 1/8-inch of metal shall be removed by mechanical means from the cut surfaces of stainless steel.

Wherever a defect is removed, and repair by welding is not required, the affected area shall be blended into the surrounding surface eliminating sharp notches, crevices, or corners.

3.4.1.2 Rewelding

Repair welds shall be made using an electrode or filler wire smaller than that used in making the original weld. Rewelding shall be done using qualified welding procedures. The surface shall be cleaned before rewelding. Repair welds shall meet the requirements of this specification.

3.4.1.3 Peening or Caulking

The use of force (peening) or foreign materials to mask, fill in, seal, or disguise any welding defects shall not be permitted.

3.5 MAINTAINING CLEANLINESS OF PIPING

The Contractor shall keep the interior and ends of all new piping affected by the Contractor's operations thoroughly cleaned of foreign matter and water before and after being installed. Piping systems shall be kept clean during installation by means of plugs or other approved methods. When work is not in progress, open ends of piping and fittings shall be closed so that no water or other foreign substance will enter the pipes or fittings. Piping shall be inspected before placing into position. The interior of each length of pipe shall be cleaned after welding; A swab, with a leather or canvas belt disc to fit the inside diameter of pipe, shall be pulled through each length of pipe after welding in place. It shall be the Contractor's responsibility for insuring that the interior of the piping is free of foreign matter including weld slag when it is connected into the system.

-- End of Section --

SECTION 33 56 10

FACTORY-FABRICATED FUEL STORAGE TANKS
01/08

PART 1 GENERAL

1.1 SUMMARY

This section defines the requirements for factory-fabricated fuel and fuel additive storage tanks. All requirements and work associated with SDA Tank, F-24 Breakout Tank, and CI/LI Tank are a part of Bid Option A-3.

1.1.1 Related Sections

1.1.1.1 Earthwork

Excavation and backfilling for tanks shall be as specified in Section 31 23 00.00 20 EXCAVATION AND FILL.

1.2 REFERENCES

The publications listed below form a part of this specification to the extent referenced. The publications are referred to within the text by the basic designation only.

AMERICAN PETROLEUM INSTITUTE (API)

API MPMS 2.2E	(2004; Errata 2009; R 2009) Petroleum and Liquid Petroleum Products - Calibration of Horizontal Cylindrical Tanks - Part 1: Manual Methods
API RP 2003	(2008; 7th Ed) Protection Against Ignitions Arising out of Static, Lightning, and Stray Currents
API RP 540	(1999; R 2004) Electrical Installations in Petroleum Processing Plants
API Std 2000	(2009; 6th Ed) Venting Atmospheric and Low-Pressure Storage Tanks

ASME INTERNATIONAL (ASME)

ASME B16.5	(2013) Pipe Flanges and Flanged Fittings: NPS 1/2 Through NPS 24 Metric/Inch Standard

ASTM INTERNATIONAL (ASTM)

ASTM A193/A193M	(2012a) Standard Specification for Alloy-Steel and Stainless Steel Bolting Materials for High-Temperature Service and Other Special Purpose Applications
ASTM A194/A194M	(2013) Standard Specification for Carbon and Alloy Steel Nuts for Bolts for

	High-Pressure or High-Temperature Service, or Both
ASTM A307	(2012) Standard Specification for Carbon Steel Bolts, Studs, and Threaded Rod 60 000 PSI Tensile Strength
ASTM A563	(2007a) Standard Specification for Carbon and Alloy Steel Nuts
ASTM B117	(2011) Standard Practice for Operating Salt Spray (Fog) Apparatus
ASTM F844	(2007a) Washers, Steel, Plain (Flat), Unhardened for General Use

INSTITUTE OF ELECTRICAL AND ELECTRONICS ENGINEERS (IEEE)

IEEE 1100	(2005) Emerald Book IEEE Recommended Practice for Powering and Grounding Electronic Equipment
IEEE 142	(2007) Recommended Practice for Grounding of Industrial and Commercial Power Systems - IEEE Green Book

NATIONAL FIRE PROTECTION ASSOCIATION (NFPA)

NFPA 30	(2012; Errata 2011; Errata 2011) Flammable and Combustible Liquids Code
NFPA 30A	(2012; Errata 2011) Code for Motor Fuel Dispensing Facilities and Repair Garages
NFPA 407	(2012; TIA 11-1) Standard for Aircraft Fuel Servicing
NFPA 70	(2014; AMD 1 2013; Errata 2013; AMD 2 2013) National Electrical Code
NFPA 77	(2014) Recommended Practice on Static Electricity
NFPA 780	(2014) Standard for the Installation of Lightning Protection Systems

STEEL TANK INSTITUTE (STI)

STI 700-50-5007	(2010) Installation Instructions for Shop Fabricated Aboveground Tanks for Flammable, Combustible Liquids

U.S. DEPARTMENT OF DEFENSE (DOD)

MIL-DTL-5624	(2013; Rev V) Turbine Fuel, Aviation, Grades JP-4 and JP-5
MIL-DTL-83133	(2011; Rev H; Am 1 2013) Turbine Fuels, Aviation, Kerosene Type, JP-8 (NATO F-34),

NATO F-35 and JP-8 + 100 (NATO F-37)

UNDERWRITERS LABORATORIES (UL)

UL 1316	(1994; Reprint May 2006) Glass-Fiber-Reinforced Plastic Underground Storage Tanks for Petroleum Products, Alcohols, and Alcohol-Gasoline Mixtures
UL 142	(2006; Reprint Jul 2013) Steel Aboveground Tanks for Flammable and Combustible Liquids

1.3 SUBMITTALS

Government approval is required for submittals with a "G" designation; submittals not having a "G" designation are for Contractor Quality Control approval. Submit the following in accordance with Section 01 33 00 SUBMITTAL PROCEDURES:

SD-02 Shop Drawings

Grounding and Bonding; G
Tank deadman anchors or hold-down slab; G

SD-03 Product Data

Aboveground Storage Tank (SDA Tank); G
Aboveground Storage Tank (F-24 Breakout Tank); G
Aboveground Storage Tank (CI/LI Tank); G
Aboveground Storage Tank (JP-5 Day Tank); G
Underground Storage Tank (Emergency Spill Tank); G
Tank Protective Coatings; G
Tank Levels Panel (TLP) and ATG System; G
Level Alarm System; G
Tank Gauges; G
Tank Manway and Inspection Hatch; G
Tank Mixers; G
Tank Anchoring; G
Pressure/Vacuum Conservation Vent; G
Level Indicator; G
Mechanical Level Gauge; G
Emergency Vent; G

SD-05 Design Data

Calculations for deadman anchor or hold-down slab; G

SD-06 Test Reports

Aboveground Storage Tank Tightness Tests; G
Underground Storage Tank Tightness Tests; G
Tank Manufacturer's Tests
Tank Fill Tests

SD-07 Certificates

Contractor Qualifications; G
Permitting
Registration

Licensed Personnel
Demonstrations

SD-08 Manufacturer's Instructions

Aboveground Storage Tank (SDA Tank); G
Aboveground Storage Tank (F-24 Breakout Tank); G
Aboveground Storage Tank (CI/LI Tank); G
Aboveground Storage Tank (JP-5 Day Tank); G
Underground Storage Tank (Emergency Spill Tank); G
Tank Levels Panel (TLP) and ATG System; G
Level Alarm System; G
Tank Gauges; G
Tank Mixers; G

SD-10 Operation and Maintenance Data

Aboveground Storage Tank (SDA Tank); G
Aboveground Storage Tank (F-24 Breakout Tank); G
Aboveground Storage Tank (CI/LI Tank); G
Aboveground Storage Tank (JP-5 Day Tank); G
Underground Storage Tank (Emergency Spill Tank); G
Tank Levels Panel (TLP) and ATG System; G
Level Alarm System; G
Tank Gauges; G
Tank Mixers; G

1.4 QUALITY ASSURANCE

1.4.1 Contractor Qualifications

Each installation Contractor shall have successfully completed at least 3 projects of the same scope, and the same size or larger within the last 6 years, and demonstrated specific installation experience in regard to the specific system installation to be performed. Each installation Contractor shall have taken, if applicable, manufacturer's training courses on the installation of storage tanks and shall meet all applicable licensing requirements in the state. Submit a letter listing prior projects, the date of construction, a point of contact for each prior project, the scope of work of each prior project, and a detailed list of work performed. The letter shall also provide evidence of prior manufacturer's training, state licensing, and other related information.

1.4.2 Regulatory Requirements

1.4.2.1 Permitting

Obtain necessary permits in conjunction with the installation of underground storage tanks as required by federal, state, or local authority.

1.4.2.2 Registration

Obtain and complete all required tank registration forms required by federal, state, and local authorities. Submit all tank registration forms within 30 days after contract award. The Contracting Officer will submit the forms to the proper regulatory agencies.

1.4.2.3 Licensed Personnel

Tank installers shall be licensed/certified by the state when the state requires licensed installers.

1.5 DELIVERY, STORAGE, AND HANDLING

Handle, store, and protect equipment and materials to prevent damage before and during installation in accordance with the manufacturer's recommendations, and as approved by the Contracting Officer. Replace damaged or defective items.

1.6 PROJECT/SITE CONDITIONS

Exposed moving parts, parts that produce high operating temperatures and pressures, parts that may be electrically energized, and parts that may be a hazard to operating personnel shall be insulated, fully enclosed, guarded, or fitted with other types of safety devices. Install safety devices so that proper operation of equipment is not impaired.

PART 2 PRODUCTS

2.1 DESIGN CONDITIONS

Components to be ASME B16.5, Class 150 (275 psig at 100 degrees F), unless noted otherwise. Components to be suitable for outside, unsheltered location, and functional normally in ambient temperatures between 32 and 100 degrees F. Components shall be suitable for use with the product systems for which they are intended to serve. The fuel products include JP-8 turbine fuel, JP-5 turbine fuel, and fuel additives.

2.1.1 Properties of F-24 Turbine Fuel

The properties of F-24 turbine fuel are specific gravity 0.775 to 0.840 at 60 degrees F and True Vapor pressure of 0.05 psia. The military specification is MIL-DTL-83133.

2.1.2 Properties of JP-5 Turbine Fuel

The properties of JP-5 turbine fuel are specific gravity of 0.788 to 0.845 at 60 degrees F and True Vapor pressure of 0.004 psia. The military specification is MIL-DTL-5624.

2.1.3 Properties of Corrosion Inhibitor/Lubricity Improver (CI/LI) Additive

The properties of CI/LI with a 50/50 dilution conforming to MIL-PRF-25017 are; specific gravity is 0.909 at 60 degrees F, flash point is greater than 88 degrees F, and viscosity range of 4.6 cSt at 104 degrees F and 25 cSt at 0 degrees F.

2.1.4 Properties of Static Dissipator Additive (SDA)

The properties of SDA known as Stadis 450 are; specific gravity of 0.92 at 60 degrees F, flash point of 42 degrees F, and viscosity range of 7.5 cSt at 100 degrees F and 47 cSt at 0 degrees F.

2.2 MATERIALS AND EQUIPMENT

2.2.1 General

Provide materials and equipment that are standard products of a manufacturer regularly engaged in the manufacturing of such products, that are of a similar material, design and workmanship. Provide materials and equipment that have been in satisfactory commercial or industrial use for a minimum 2 years prior to bid opening. The 2 year period shall include applications of the equipment and materials under similar circumstances and of similar size. Provide materials and equipment that have been for sale on the commercial market through advertisements, manufacturers' catalogs, or brochures during the 2 year period.

2.2.2 Nameplates

Attach nameplates to all specified equipment defined herein. List on each nameplate the manufacturer's name, address, contract number, acceptance date, component type or style, model or serial number, catalog number, capacity or size, and the system that is controlled. Construct plates of stainless steel. Install nameplates in prominent locations with nonferrous screws, nonferrous bolts, or permanent adhesive. Minimum size of nameplates shall be one by 2.5 inches. Lettering shall be the normal block style with a minimum 0.25 inch height. Accurately align all lettering on nameplates. Key the nameplates to a chart and schedule for each system. Frame charts and schedule under glass, and locate where directed near each system. Furnish two copies of each chart and schedule. Each nameplate description shall identify its function.

2.3 MATERIALS

Internal parts and components of equipment, piping, piping components, and valves that could be exposed to fuel during system operation shall not be constructed of zinc coated (galvanized) metal, brass, bronze, or other copper bearing alloys. Do not install cast iron bodied valves in piping systems that could be exposed to fuel during system operation.

2.4 ELECTRICAL WORK

Provide controllers, integral disconnects, contactors, controls, and control wiring with their respective pieces of equipment. Provide electrical equipment, including motors and wiring, as specified in Section 26 20 00 INTERIOR DISTRIBUTION SYSTEM. Provide switches and devices necessary for controlling and protecting electrical equipment. Controllers and contactors shall have a maximum of 120-volt control circuits and shall have auxiliary contacts for use with the controls provided.

2.4.1 Underground Wiring

Enclose underground electrical wiring in PVC coated conduit. Dielectrically isolate conduit at any steel storage tank connection.

2.4.2 Grounding and Bonding

Grounding and bonding shall be in accordance with NFPA 70, NFPA 77, NFPA 407, NFPA 780, API RP 540, API RP 2003, IEEE 142, and IEEE 1100. Provide jumpers to overcome the insulating effects of gaskets, paints, or nonmetallic components.

2.5 TANK LEVELS PANEL (TLP) AND ATG SYSTEM

The TLP and ATG shall perform tank gauging. The ATG system shall use rigid stainless steel magnetostrictive type level probes to measure fuel levels at all locations indicated on the drawings. The ATG system must be able to measure and compute fuel level, fuel density, fuel net volume, fuel and water corrected volume, and measurements must be from the tank's datum plate. The same unit shall be able to perform leak detection. The level probes shall be approved for installation in a hazardous area and certified intrinsically safe by an approved agency and provide lightning protection. The ATG system must be able to interface with the site AFHE. The TLP must provide a minimum of four sets of alarm outputs; high-high, high, low, and low-low via alarm horn and indicator lights integral to unit. The high-high, high, low, and low-low alarms shall be coordinated with and match the level switch set points. The following is a list of minimum measurement accuracies required for the ATG System:

a. Level accuracy plus or minus 0.05 inch

b. Corrected volume accuracy plus or minus 0.1 percent

c. Density accuracy plus or minus 1 percent

d. Temperature accuracy plus or minus 1 degree F

The following is a list of minimum requirements for the TLP:

a. Operating Voltage - 120VAC, 60HZ

b. Monitor/HMI - 7 inch display

c. Sensor Inputs - Level, temperature and density inputs for seven tanks

d. Inputs/Outputs - 10AC inputs, 10 relay outputs

e. Communications - One Ethernet port

f. Level Alarm Outputs - Integral to unit horn and indicator lights (coordination with level switch set points required)

g. Calibration - One time calibration (no periodic calibration shall be required)

2.6 Level Alarm System

Provide a system that will monitor liquid level setpoints identified using the tank level switches. The system shall delineate between each individual setpoint as well as each individual tank. The system shall produce an audible and visible alarm in the event of an alarm condition. The system shall be totally independent of the Tank Levels Panel (TLP) and ATG System.

a. Configure each tanks 4 setpoints in accordance with the tank schedules indicated on drawings.

b. Level Panels: Day Tank and Additive Tank Level Panels and components shall be installed in enclosures and rated as identified in Section 33 09 53 CONTROL AND TANK LEVEL PANELS. The following alarms and switches shall be provided at each level panel.

1. Audible Alarm: Panel shall have an audible alarm that annunciates in the event of a detected alarm condition.

2. Visual Alarm: Panel shall have a visual alarm that illuminates in the event of a detected alarm condition.

3. Acknowledge Switch: Panel shall have a manual acknowledge switch that will deactivate the audible alarm. The acknowledge switch shall not deactivate subsequent audible alarms unless depressed manually again for each occurrence. Under no circumstance shall this acknowledgement switch extinguish the visual alarms until the alarm condition has been corrected. The acknowledge switch shall be an integral component located on the front of the control panel. The switch shall be either a key switch or push button.

2.7 ABOVEGROUND STORAGE TANK (SDA TANK), TK-6

(Bid Option A-3)

2.7.1 Stainless Steel Tank With Integral Stainless Steel Supports

For bid option A-3, provide a factory-welded, single wall stainless steel tank that conforms to NFPA 30, NFPA 30A, and UL 142. Tank shall be designed and manufactured for a horizontal cylindrical installation. Tank shall be mounted on the tank manufacturer's standard UL listed tank saddles that elevates the tank above the underlying concrete slab a minimum of 12 inches. Capacity shall be 4,000 gallons nominal with the dimensions of 6'-0" in diameter by 19'-0" in length. Tank shall have lifting lugs that allow for tank relocation. Provide tank with an external ladder and platform assembly. The ladder and platform assembly shall be constructed of galvanized structural steel and shall allow personal access up to and along the tank top. Ladder, platform and railing shall be designed and installed to meet OSHA safety regulations.

2.7.2 Tank Components

2.7.2.1 Tank Manway and Inspection Hatch

Tank manway shall have an internal diameter of 30 inches. Provide each manway with a matching flanged watertight manway cover. Manway covers shall be UL listed, be constructed of pressed or mild steel, and include a UL listed gasket. Tank manway cover shall have a hinged inspection hatch with an internal diameter of 16 inches and a lockable closure lid. Include a blind flange and a UL listed gasket.

2.7.2.2 Tank Piping Penetrations

Provide the size and type of tank piping connection shown in the drawings. For double flanged and single flanged connections provide ASME B16.5, Class 150, raised face flanges. For threaded connections, provide welded in place double tapered NPT full couplings, except when noted otherwise. Unless otherwise noted, tank connections will be made on the top of the tank.

2.7.2.3 Tank Striker/Impact Plates

Provide an interior striker/impact plate under each tank manway and pipe connection. Each plate shall be a minimum of 1/4 inch in thickness, be

larger in diameter than the tank penetration, fit the curvature of the tank bottom, and be completely coated in the same fashion as the interior tank bottom coating. Each plate shall be welded to the tank bottom at the factory (full circumference connection).

2.7.2.4 Tank Fill (SDA)

Provide a 2-inch double flanged nozzle in the top of the tank with a drop tube and elbow for tank fill. Provide an internal drop tube with a 90 degree elbow of aluminum terminating 6 inches above the tank floor and an isolating gasket for dissimilar metal protection.

2.7.2.5 Tank Withdrawal

Provide a 2-inch reinforced double flanged nozzle in the tank head for issue to the additive injector. Locate nozzle 12 inches above the bottom of the tank. Provide a stainless steel, internal withdrawal line with a turned down 45-degree elbow and bell opening. Bell opening shall be located parallel and 3 inches above the tank floor.

2.7.2.6 Water Draw-Off

Provide a 2-inch double flanged nozzle at the low end of the tank for water draw-off. Include an internal aluminum draw-off line extended down to within 1 inch above the tank floor. Provide an isolating flange gasket for dissimilar metal protection.

2.7.2.7 Spare Nozzle

Provide two 4-inch double flanged nozzles in the top of the tank for spares. Include blind flanges.

2.7.3 Tank Accessories

2.7.3.1 Pressure/Vacuum Conservation Vent

Size and construct vent pipe in accordance with NFPA 30, NFPA 30A, and UL 142. Provide a pressure vacuum conservation vent at the termination point of each vent pipe. Vent to be sized to maintain a maximum of 1/2-ounce per square inch pressure or vacuum. Vent body shall be constructed of 316 Stainless Steel. Seats to be replaceable and comprised of Teflon. Provide a minimum 40-mesh stainless steel insect screen. The vent hood shall prevent rain, snow, or ice from entering the vent piping. Vent opening shall be a minimum of 12 ft above grade.

2.7.3.2 Emergency Vent

Provide emergency vents for the primary tank. Emergency vent shall be UL listed and meet the requirements of NFPA 30, UL 142, and API Std 2000. Vent body shall be aluminum with a flat face flange connection in accordance with ASME B16.5, Class 150. Cover shall be aluminum and rest on a Viton O-ring seal. Size shall be determined by the manufacturer to meet the requirements of NFPA 30 and API Std 2000. Provide an isolating flange gasket between the emergency vent and the tank nozzle.

2.7.3.3 Gauge Hatch

Provide a 4 inch double flanged nozzle for manual gauging and an internal aluminum slotted stilling well to within 3 inches of the tank bottom for

manual gauging. Provide a striker plate below gauge hatch. Equip nozzle with a self-closing, lockdown cover/hatch of aluminum. Provide an isolating flange gasket for dissimilar metal protection.

2.7.3.4 Stick Gauge

For each tank, provide 2 wooden stick gauges. Gauge length shall allow the measurement of the entire level of fuel in the corresponding tank. Gauges shall be compatible with the fuel to be measured (no swelling or damage from fuel contact). Provide gauge with non-sparking caps on each end. Mark gauges in feet and inches. The smallest unit of measure on the gauge shall be 1/16 inch.

2.7.3.5 Level Indicator

Provide a clock gauge type liquid level indicator. Gauge body shall be aluminum with a 2-inch NPT connection. Gauge face shall be 6 inches in diameter with a standard 12-hour clock face with the small hand indicating feet and the large hand indicating inches to an accuracy of 1/8 of an inch. Float and cable shall be stainless steel and install through a 2-inch riser.

2.7.3.6 Tank Mixers

Provide two mixers, mounted to the top of the tank. Locate the mixers as indicated on the drawings. Mixers shall be mounted using ASME B16.5, 150 lb. 12-inch flanges. The mixers shall be mounted at a seven degree angle inwards, toward the center of the tank. Each mixer shall have two, 10-inch diameter impellers. The impeller spacing shall be adjustable. the mixers shall be driven by 1/2 HP electric motors. Electric motors shall be rated for use at 60 Hz, single phase, 230V with an A listed and labeled explosionproof, fan-cooled enclosure. All wetted components need to be made of 316L stainless steel. All seals shall be Viton rubber.

2.7.3.7 Automatic Tank Gauge

The automatic tank gauging system shall include one double flanged nozzle, a Magnetostrictive type level probe for the tank, and an aluminum stilling well.

a. Top Mounted Nozzles: Provide a 4-inch, double flanged nozzle in the top of the tank for installation of the level probe.

b. Magnetostrictive type level probe: Shall be as indicated in Section 2.5 TANK LEVELS PANEL (TLP) AND ATG SYSTEM.

2.7.3.8 Tank Level Switches

(2) Two-stage or (1) four-stage liquid level float switch shall be used to monitor low-low, low, high, and high-high tank levels. Float material shall be stainless steel, type 304 or 316, with stop collars and shall be mounted on a stainless steel shaft. Switch contacts shall be single pole double throw switches factory mutual approved or UL-listed for use in Class I, Division 1, Group D hazardous location with a maximum temperature rating of T2D (419 degrees F). Units shall have provisions to check High-High level switch operation without increasing the fuel level in the tanks as shown on the contract drawings. Provide with a fabricated blind flange mounted on a 4-inch single flanged tank nozzle.

2.7.3.9 Tank Strapping Table

Furnish 2 API MPMS 2.2E certified strapping tables (calibration charts) for each tank. Tables shall indicate the liquid contents in gallons for each 1/16 inch of tank depth. For each tank, provide an electronic media file of each strapping table.

2.8 ABOVEGROUND STORAGE TANK (F-24 BREAKOUT TANK), TK-5

(Bid Option A-3)

2.8.1 Steel Tank With Integral Steel Supports

For Bid Option A-3, provide a factory-welded, single wall carbon steel tank that conforms to NFPA 30, NFPA 30A, and UL 142. Tank shall be designed and manufactured for a horizontal cylindrical installation. Tank shall be mounted on the tank manufacturer's standard UL listed tank saddles that elevates the tank above the underlying concrete slab a minimum of 12 inches. Capacity shall be 4,000 gallons nominal with the dimensions of 6'-0" in diameter by 19'-0" in length. Tank shall have lifting lugs that allow for tank relocation. Provide tank with an external ladder and platform assembly. The ladder and platform assembly shall be constructed of galvanized structural steel and shall allow personal access up to and along the tank top. Ladder, platform and handrails shall be designed and installed to meet OSHA safety regulations.

2.8.2 Tank Protective Coatings

2.8.2.1 Interior Surfaces

Coat 100 percent of a metal tank's interior surfaces including all metal piping and metal appurtenances as specified in Section 09 97 13.17 THREE COAT EPOXY INTERIOR COATING OF WELDED STEEL PETROLEUM FUEL TANKS.

2.8.2.2 Exterior Surfaces

Protect the exterior surfaces of each aboveground tank as specified in Section 09 97 13.27 EXTERIOR COATING OF STEEL STRUCTURES.

2.8.3 Tank Components

2.8.3.1 Tank Manway and Inspection Hatch

Tank manway shall have an internal diameter of 30 inches. Provide each manway with a matching flanged watertight manway cover. Manway covers shall be UL listed, be constructed of pressed or mild steel, and include a UL listed gasket. Tank manway cover shall have a hinged inspection hatch with an internal diameter of 16 inches and a lockable closure lid. Include a blind flange and a UL listed gasket.

2.8.3.2 Tank Piping Penetrations

Provide the size and type of tank piping connection shown in the drawings. For double flanged and single flanged connections provide ASME B16.5, Class 150, raised face flanges. For threaded connections, provide welded in place double tapered NPT full couplings, except when noted otherwise. Unless otherwise noted, tank connections will be made on the top of the tank.

2.8.3.3 Tank Striker/Impact Plates

Provide an interior striker/impact plate under each tank manway and pipe connection. Each plate shall be a minimum of 1/4 inch in thickness, be larger in diameter than the tank penetration, fit the curvature of the tank bottom, and be completely coated in the same fashion as the interior tank bottom coating. Each plate shall be welded to the tank bottom at the factory (full circumference connection).

2.8.3.4 Tank Fill/Recirculation

Provide a 3-inch double flanged nozzle in the top of the tank with a drop tube and elbow for tank fill. Provide an internal drop tube with a 90 degree elbow of aluminum terminating 6 inches above the tank floor and an isolating gasket for dissimilar metal protection.

2.8.3.5 Tank Withdrawal

Provide a 4-inch double flanged nozzle in the top of the tank with a drop tube with a reducer. Provide an internal drop tube with a 4-inch by 8-inch reducer of aluminum terminating 3 inches above the tank floor and an isolating gasket for dissimilar metal protection. Provide a carbon steel or stainless steel foot valve with a maximum opening pressure of 0.5 psid on the bottom of the drop tube.

2.8.3.6 Water Draw-Off

Provide a 2-inch double flanged nozzle at the low end of the tank for water draw-off. Include an internal aluminum draw-off line extended down to within 1 inch above the tank floor. Provide an isolating flange gasket for dissimilar metal protection.

2.8.3.7 Thermal Relief Nozzle

Provide 1-inch double tapered NPT full coupling for thermal relief discharge.

2.8.3.8 Spare Nozzle

Provide two 4-inch double flanged nozzles in the top of the tank for spares. Include blind flanges.

2.8.4 Tank Accessories

2.8.4.1 Normal Vent

Size and construct vent pipe in accordance with NFPA 30, NFPA 30A, and UL 142. Provide an atmospheric updraft vent cap at the termination point of each vent pipe. Cap shall be constructed of aluminum. Provide a minimum 40-mesh brass or bronze insect screen internal to the cap. The cap shall prevent rain, snow, or ice from entering the vent piping. Vent opening shall be a minimum of 12 ft above grade.

2.8.4.2 Emergency Vent

Provide emergency vents for the primary tank. Emergency vent shall be UL listed and meet the requirements of NFPA 30, UL 142, and API Std 2000. Vent body shall be aluminum with a flat face flange connection in accordance with ASME B16.5, Class 150. Cover shall be aluminum and rest on

a Viton O-ring seal. Size shall be determined by the manufacturer to meet the requirements of NFPA 30 and API Std 2000. Provide an isolating flange gasket between the emergency vent and the tank nozzle.

2.8.4.3 Gauge Hatch

Provide a 4 inch double flanged nozzle for manual gauging and an internal aluminum slotted stilling well to within 3 inches of the tank bottom for manual gauging. Provide a striker plate below gauge hatch. Equip nozzle with a self-closing, lockdown cover/hatch of aluminum. Provide an isolating flange gasket for dissimilar metal protection.

2.8.4.4 Stick Gauge

For each tank, provide 2 wooden stick gauges. Gauge length shall allow the measurement of the entire level of fuel in the corresponding tank. Gauges shall be compatible with the fuel to be measured (no swelling or damage from fuel contact). Provide gauge with non-sparking caps on each end. Mark gauges in feet and inches. The smallest unit of measure on the gauge shall be 1/16 inch.

2.8.4.5 Level Indicator

Provide a clock gauge type liquid level indicator. Gauge body shall be aluminum with a 2-inch NPT connection. Gauge face shall be 6 inches in diameter with a standard 12-hour clock face with the small hand indicating feet and the large hand indicating inches to an accuracy of 1/8 of an inch. Float and cable shall be stainless steel and install through a 2-inch riser.

2.8.4.6 Automatic Tank Gauge

The automatic tank gauging system shall include one double flanged nozzle, a Magnetostrictive type level probe for the tank, and an aluminum stilling well.

a. Top Mounted Nozzles: Provide a 4-inch, double flanged nozzle in the top of the tank for installation of the level probe.

b. Magnetostrictive type level probe: Shall be as indicated in Section 2.5 TANK LEVELS PANEL (TLP) AND ATG SYSTEM.

2.8.4.7 Tank Level Switches

The switches shall be an external mount liquid level switch with four-stage (High-High, High, Low, Low-Low) stainless steel shaft and four stainless steel, type 304 or 316, floats and stop collars. Switch contacts shall be double pole double throw switches factory mutual approved or UL-listed for use in Class I, Division 1, Group D hazardous location with a maximum temperature rating of T2D (419 degrees F). Units shall have provisions to check High-High level switch operation without increasing the fuel level in the tanks as shown on the contract drawings. Provide with a fabricated blind flange mounted on a 4-inch single flanged tank nozzle.

2.8.4.8 Tank Strapping Table

Furnish 2 API MPMS 2.2E certified strapping tables (calibration charts) for each tank. Tables shall indicate the liquid contents in gallons for each 1/16 inch of tank depth. For each tank, provide an electronic media file

of each strapping table.

2.9 ABOVEGROUND STORAGE TANK (CI/LI TANK), TK-7

(Bid Option A-3)

2.9.1 Steel Tank With Integral Steel Supports

For Bid Option A-3, provide a factory-welded, single wall carbon steel tank that conforms to NFPA 30, NFPA 30A, and UL 142. Tank shall be designed and manufactured for a horizontal cylindrical installation. Tank shall be mounted on the tank manufacturer's standard UL listed tank saddles that elevates the tank above the underlying concrete slab a minimum of 12 inches. Capacity shall be 5,000 gallons nominal with the dimensions of 8'-0" in diameter by 13'-4" in length. Tank shall have lifting lugs that allow for tank relocation. Provide tank with an external ladder and platform assembly. The ladder and platform assembly shall be constructed of galvanized structural steel and shall allow personal access up to and along the tank top. Ladder, platform and railing shall be designed and installed to meet OSHA safety regulations.

2.9.2 Tank Protective Coatings

2.9.2.1 Interior Surfaces

Coat 100 percent of a metal tank's interior surfaces including all metal piping and metal appurtenances as specified in Section 09 97 13.17 THREE COAT EPOXY INTERIOR COATING OF WELDED STEEL PETROLEUM FUEL TANKS.

2.9.2.2 Exterior Surfaces

Protect the exterior surfaces of each aboveground tank as specified in Section 09 97 13.27 EXTERIOR COATING OF STEEL STRUCTURES.

2.9.3 Tank Components

2.9.3.1 Tank Manway and Inspection Hatch

Tank manway shall have an internal diameter of 30 inches. Provide each manway with a matching flanged watertight manway cover. Manway covers shall be UL listed, be constructed of pressed or mild steel, and include a UL listed gasket. Tank manway cover shall have a hinged inspection hatch with an internal diameter of 16 inches and a lockable closure lid. Include a blind flange and a UL listed gasket.

2.9.3.2 Tank Piping Penetrations

Provide the size and type of tank piping connection shown in the drawings. For double flanged and single flanged connections provide ASME B16.5, Class 150, raised face flanges. For threaded connections, provide welded in place double tapered NPT full couplings, except when noted otherwise. Unless otherwise noted, tank connections will be made on the top of the tank.

2.9.3.3 Tank Striker/Impact Plates

Provide an interior striker/impact plate under each tank manway and pipe connection. Each plate shall be a minimum of 1/4 inch in thickness, be larger in diameter than the tank penetration, fit the curvature of the tank

bottom, and be completely coated in the same fashion as the interior tank bottom coating. Each plate shall be welded to the tank bottom at the factory (full circumference connection).

2.9.3.4 Tank Internal Ladder

Provide interior tank ladders constructed of either fiberglass or steel. If steel, coat the ladder in the same fashion as the tank interior. The two stringers shall be a minimum 3/8 inch thick and a minimum 2 inches wide. The rungs shall be a minimum 3/4 inch rod on 12 inches centers. Members of the ladder shall be securely affixed. Ladder shall be of sufficient length to extend from the bottom of the tank to the top surface of the tank. Ladder shall be rigidly connected to the tank bottom in accordance with the tank manufacturer's standard. Ladder shall be connected to the top of the tank with pipe guides or slip bars to accommodate expansion of the two stringers.

2.9.3.5 Tank Fill

Provide a 3-inch double flanged nozzle in the top of the tank with a drop tube and diffuser for tank fill. Provide an internal drop tube with diffuser of aluminum terminating 6 inches above the tank floor and an isolating gasket for dissimilar metal protection.

2.9.3.6 Tank Withdrawal

Provide a 2-inch double flanged nozzle in the tank head for issue to the additive injector. Locate nozzle 12 inches above the bottom of the tank. Provide an aluminum, internal withdrawal line with a turned down 45-degree elbow and bell opening. Bell opening shall be located parallel and 3 inches above the tank floor. Provide an isolating flange gasket for dissimilar metal protection.

2.9.3.7 Water Draw-Off

Provide a 2-inch double flanged nozzle at the low end of the tank for water draw-off. Include an internal aluminum draw-off line extended down to within 1 inch above the tank floor. Provide an isolating flange gasket for dissimilar metal protection.

2.9.3.8 Spare Nozzle

a. Provide two 4-inch double flanged nozzles in the top of the tank for spares. Include blind flanges.

b. Provide a 12-inch single flanged nozzle in the top of the tank as a spare or for future use for a mixer. Include a blind flange.

2.9.4 Tank Accessories

2.9.4.1 Pressure/Vacuum Conservation Vent

Size and construct vent pipe in accordance with NFPA 30, NFPA 30A, and UL 142. Provide a pressure vacuum conservation vent at the termination point of each vent pipe. Vent to be sized to maintain a maximum of 1/2-ounce per square inch pressure or vacuum. Vent body shall be constructed of 316 Stainless Steel. Seats to be replaceable and comprised of Teflon. Provide a minimum 40-mesh stainless steel insect screen. The vent hood shall prevent rain, snow, or ice from entering the vent piping.

Vent opening shall be a minimum of 12 ft above grade.

2.9.4.2 Emergency Vent

Provide emergency vents for the primary tank. Emergency vent shall be UL listed and meet the requirements of NFPA 30, UL 142, and API Std 2000. Vent body shall be aluminum with a flat face flange connection in accordance with ASME B16.5, Class 150. Cover shall be aluminum and rest on a Viton O-ring seal. Size shall be determined by the manufacturer to meet the requirements of NFPA 30 and API Std 2000. Provide an isolating flange gasket between the emergency vent and the tank nozzle.

2.9.4.3 Gauge Hatch

Provide a 4 inch double flanged nozzle for manual gauging and an internal aluminum slotted stilling well to within 3 inches of the tank bottom for manual gauging. Provide a striker plate below gauge hatch. Equip nozzle with a self-closing, lockdown cover/hatch of aluminum. Provide an isolating flange gasket for dissimilar metal protection.

2.9.4.4 Stick Gauge

For each tank, provide 2 wooden stick gauges. Gauge length shall allow the measurement of the entire level of fuel in the corresponding tank. Gauges shall be compatible with the fuel to be measured (no swelling or damage from fuel contact). Provide gauge with non-sparking caps on each end. Mark gauges in feet and inches. The smallest unit of measure on the gauge shall be 1/16 inch.

2.9.4.5 Level Indicator

Provide a clock gauge type liquid level indicator. Gauge body shall be aluminum with a 2-inch NPT connection. Gauge face shall be 6 inches in diameter with a standard 12-hour clock face with the small hand indicating feet and the large hand indicating inches to an accuracy of 1/8 of an inch. Float and cable shall be stainless steel and install through a 2-inch riser.

2.9.4.6 Automatic Tank Gauge

The automatic tank gauging system shall include one double flanged nozzle, a Magnetostrictive type level probe for the tank, and an aluminum stilling well.

a. Top Mounted Nozzles: Provide a 4-inch, double flanged nozzle in the top of the tank for installation of the level probe.

b. Magnetostrictive type level probe: Shall be as indicated in Section 2.5 TANK LEVELS PANEL (TLP) AND ATG SYSTEM.

2.9.4.7 Tank Level Switches

The switches shall be an external mount liquid level switch with four-stage (High-High, High, Low, Low-Low) stainless steel shaft and four stainless steel, type 304 or 316, floats and stop collars. Switch contacts shall be double pole double throw switches factory mutual approved or UL-listed for use in Class I, Division 1, Group D hazardous location with a maximum temperature rating of T2D (419 degrees F). Units shall have provisions to check High-High level switch operation without increasing the fuel level in

the tanks as shown on the contract drawings. Provide with a fabricated blind flange mounted on a 4-inch single flanged tank nozzle.

2.9.4.8 Tank Strapping Table

Furnish 2 API MPMS 2.2E certified strapping tables (calibration charts) for each tank. Tables shall indicate the liquid contents in gallons for each 1/16 inch of tank depth. For each tank, provide an electronic media file of each strapping table.

2.10 ABOVEGROUND STORAGE TANKS (JP-5 DAY TANK), TK-1, 2 and 3

2.10.1 Steel Tank With Integral Steel Supports

Provide a factory-welded, single wall carbon steel tank that conforms to NFPA 30, NFPA 30A, and UL 142. Tank shall be designed and manufactured for a horizontal cylindrical installation. Tank shall be mounted on the tank manufacturer's standard UL listed tank saddles that elevates the tank above the underlying concrete slab a minimum of 12 inches. Capacity shall be 25,000 gallons nominal with the dimensions of 10'-6" in diameter by 38'-9" in length. Typical of three day tanks. Tanks shall have lifting lugs that allow for tank relocation. Provide tank with an external ladder and platform assembly. The ships ladder type stairs, crossover catwalk, and platform assembly shall be constructed of galvanized structural steel and shall allow personal access up to and along the tank top. Stairs, catwalk, platform and railing shall be designed and installed to meet OSHA safety regulations. Platform assembly and crossover catwalk shall be supported by the tank.

2.10.2 Tank Protective Coatings

2.10.2.1 Interior Surfaces

Coat 100 percent of a metal tank's interior surfaces including all metal piping and metal appurtenances as specified in Section 09 97 13.17 THREE COAT EPOXY INTERIOR COATING OF WELDED STEEL PETROLEUM FUEL TANKS.

2.10.2.2 Exterior Surfaces

Protect the exterior surfaces of each aboveground tank as specified in Section 09 97 13.27 EXTERIOR COATING OF STEEL STRUCTURES.

2.10.3 Tank Components

2.10.3.1 Tank Manway and Inspection Hatch

Tank manway shall have an internal diameter of 36 inches. Provide each manway with a matching flanged watertight manway cover. Manway covers shall be UL listed, be constructed of pressed or mild steel, and include a UL listed gasket. Typical of two manways. One tank manway cover shall have a hinged inspection hatch with an internal diameter of 16 inches and a lockable closure lid. Include a blind flange and a UL listed gasket for manway.

2.10.3.2 Tank Piping Penetrations

Provide the size and type of tank piping connection shown in the drawings. For double flanged and single flanged connections provide ASME B16.5, Class 150, raised face flanges. For threaded connections, provide welded in

place double tapered NPT full couplings, except when noted otherwise. Unless otherwise noted, tank connections will be made on the top of the tank.

2.10.3.3 Tank Striker/Impact Plates

Provide an interior striker/impact plate under each tank manway and pipe connection. Each plate shall be a minimum of 1/4 inch in thickness, be larger in diameter than the tank penetration, fit the curvature of the tank bottom, and be completely coated in the same fashion as the interior tank bottom coating. Each plate shall be welded to the tank bottom at the factory (full circumference connection).

2.10.3.4 Tank Internal Ladder

Provide interior tank ladders constructed of either fiberglass or steel. If steel, coat the ladder in the same fashion as the tank interior. The two stringers shall be a minimum 3/8 inch thick and a minimum 2 inches wide. The rungs shall be a minimum 3/4 inch rod on 12 inches centers. Members of the ladder shall be securely affixed. Ladder shall be of sufficient length to extend from the bottom of the tank to the top surface of the tank. Ladder shall be rigidly connected to the tank bottom in accordance with the tank manufacturer's standard. Ladder shall be connected to the top of the tank with pipe guides or slip bars to accommodate expansion of the two stringers.

2.10.3.5 Tank Fill

Provide a 6-inch double flanged nozzle in the top of the tank with a drop tube and diffuser for tank fill. Provide an internal drop tube with diffuser of aluminum terminating 6 inches above the tank floor and an isolating gasket for dissimilar metal protection.

2.10.3.6 Tank Withdrawal

Provide an 8-inch reinforced double flanged nozzle in the tank head for issue to the truck fillstand. Locate nozzle 12 inches above the bottom of the tank. Provide an aluminum, internal withdrawal line with a turned down 45-degree elbow and bell opening. Bell opening shall be located parallel and 3 inches above the tank floor. Provide an isolating flange gasket for dissimilar metal protection.

2.10.3.7 Water Draw-Off

Provide a 2-inch double flanged nozzle at the low end of the tank for water draw-off. Include an internal aluminum draw-off line extended down to within 1 inch above the tank floor. Provide an isolating flange gasket for dissimilar metal protection.

2.10.3.8 Spare Nozzle

Provide two 4-inch double flanged nozzles in the top of the tank for spares. Include blind flanges.

2.10.4 Tank Accessories

2.10.4.1 Normal Vent

Size and construct vent pipe in accordance with NFPA 30, NFPA 30A, and

UL 142. Provide an atmospheric updraft vent cap at the termination point of each vent pipe. Cap shall be constructed of aluminum. Provide a minimum 40-mesh brass or bronze insect screen internal to the cap. The cap shall prevent rain, snow, or ice from entering the vent piping. Vent opening shall be a minimum of 12 ft above grade.

2.10.4.2 Emergency Vent

Provide emergency vents for the primary tank. Emergency vent shall be UL listed and meet the requirements of NFPA 30, UL 142, and API Std 2000. Vent body shall be aluminum with a flat face flange connection in accordance with ASME B16.5, Class 150. Cover shall be aluminum and rest on a Viton O-ring seal. Size shall be determined by the manufacturer to meet the requirements of NFPA 30 and API Std 2000. Provide an isolating flange gasket between the emergency vent and the tank nozzle.

2.10.4.3 Gauge Hatch

Provide a 4 inch double flanged nozzle for manual gauging and an internal aluminum slotted stilling well to within 3 inches of the tank bottom for manual gauging. Provide a striker plate below gauge hatch. Equip nozzle with a self-closing, lockdown cover/hatch of aluminum. Provide an isolating flange gasket for dissimilar metal protection.

2.10.4.4 Stick Gauge

For each tank, provide 2 wooden stick gauges. Gauge length shall allow the measurement of the entire level of fuel in the corresponding tank. Gauges shall be compatible with the fuel to be measured (no swelling or damage from fuel contact). Provide gauge with non-sparking caps on each end. Mark gauges in feet and inches. The smallest unit of measure on the gauge shall be 1/16 inch.

2.10.4.5 Mechanical Level Gauge

The mechanical level gauge shall be complete with all necessary incidental pipe, pulleys, fittings, supports, support brackets, tension spring, and guide wire assemblies. The head shall be made of aluminum and be mounted on the exterior of the tank approximately 54 inches above the tank bottom. The head shall contain a glass covered window complete with an inside wiper. The seals shall be made of Teflon. The shafts, graduated tape, and tape drum assembly shall be made of stainless steel. The tape shall be of sufficient length to measure the liquid level from the bottom to the top of the storage tank. Gauge measurements shall be graduated in 1/16-inch increments. The tape shall be carried over pulleys housed in elbow assemblies at each change of direction. The gauge shall include a stainless steel float, guided from the top of the tank to the bottom, and providing the actual liquid level to within plus or minus 1/16 of an inch.

2.10.4.6 Automatic Tank Gauge

The automatic tank gauging system shall include one double flanged nozzle, a Magnetostrictive type level probe for the tank, and an aluminum stilling well.

a. Top Mounted Nozzles: Provide a 4-inch, double flanged nozzle in the top of the tank for installation of the level probe.

b. Magnetostrictive type level probe: Shall be as indicated in Section

2.5 TANK LEVELS PANEL (TLP) AND ATG SYSTEM.

2.10.4.7 Tank Level Switches

The switches shall be an external mount liquid level switch with four-stage (High-High, High, Low, Low-Low) stainless steel shaft and four stainless steel, type 304 or 316, floats and stop collars. Switch contacts shall be double pole double throw switches factory mutual approved or UL-listed for use in Class I, Division 1, Group D hazardous location with a maximum temperature rating of T2D (419 degrees F). Units shall have provisions to check High-High level switch operation without increasing the fuel level in the tanks as shown on the contract drawings. Provide with a fabricated blind flange mounted on a 4-inch single flanged tank nozzle.

2.10.4.8 Tank Strapping Table

Furnish 2 API MPMS 2.2E certified strapping tables (calibration charts) for each tank. Tables shall indicate the liquid contents in gallons for each 1/16 inch of tank depth. For each tank, provide an electronic media file of each strapping table.

2.11 UNDERGROUND STORAGE TANK (EMERGENCY SPILL TANK)

Provide a factory-fabricated, fiberglass double-walled type storage tank that conforms to UL 1316, NFPA 30 and NFPA 30A. Tank shall be designed and manufactured for an underground, horizontal installation. The exterior tank walls shall be separated from the interior tank walls by standoffs; thus creating an open or interstitial space that allows for free flow of liquid. The entire interstitial space shall be monitorable for leaks. For tanks requiring concrete anchor pads or concrete deadmen, provide holddown straps and accessories as recommended by the tank manufacturer. Use filler strips between the tank shell and any metal holddown straps that conform to the tank manufacturer's requirements.

2.11.1 Design

2.11.1.1 Loading Conditions

Tank shall meet these design criteria:

a. Interstitial Pressure - The interstitial space of the tank shall withstand a minimum 20-psig pressure test.

b. Internal Load - Tank shall withstand a 5-psig air-pressure test with a 5:1 safety factor.

c. Surface Loads - Tank shall withstand surface H-20 axle loads.

d. External Hydrostatic Pressure - Tank shall be designed for 7' of overburden over the top of the tank, the hole fully flooded and a safety factor of 5:1 against general buckling.

2.11.1.2 Product Storage

a. The primary containment of double wall tanks shall be vented and operated at atmospheric pressure only.

b. Tank shall be capable of storing liquids with a specific gravity up to 1.1.

2.11.1.3 Materials

a. The primary and secondary walls of the tank shall be manufactured with 100 percent premium resin and glass-fiber reinforcement. No sand or silica fillers shall be added to the resin.

b. The interstitial space between the primary and secondary walls shall allow for free flow of liquid.

2.11.1.4 Tank Dimensions

a. Tank shall have nominal capacity of 8,000 gallons.

b. Tank shall have nominal outside diameter of 8 feet.

c. Tank shall have a nominal overall length of 26 feet/inches.

2.11.2 Accessories

2.11.2.1 Tank Anchoring

a. Anchor straps shall be as supplied by tank manufacturer and designed for a maximum load of 25,000 lbs.

b. Galvanized turnbuckles (two per anchor strap) shall be supplied by the tank manufacturer.

c. Tank deadman anchors or hold-down slab shall be designed and supplied by the tank manufacturer, designed to the ACI 318-11 standard, manufactured with 4,000 psi concrete and shall have adjustable anchor points. Calculations for deadman anchor or hold-down slab shall be submitted and sealed by a Professional Engineer in the Commonwealth of Virginia. Deadman anchors or hold-down slab shall be designed to withstand the following buoyancy conditions:

1. Empty tank without backfill and water level at mid-height of tank. Minimum safety factor against buoyancy = 1.10.

2. Empty tank with backfill and water level at top of grade. Minimum safety factor against buoyancy = 150.

(a) Buoyancy design shall assume the use of bedding material with submerged density of 47 pound/cubic foot.

2.11.2.2 Manways

The tank access manway shall be flanged, 36" I.D. and complete with UL-listed gaskets, bolts and covers as shown on tank drawings.

2.11.2.3 Threaded Fittings

a. All threaded fittings shall be NPT half or full couplings, in 2", 4" or 6" diameters.

b. Fittings shall be installed on the tank-top centerline or in the cover of the manway as shown on the tank drawings.

2.11.2.4 Containment Collars and Sumps

a. The tank shall have factory installed 40"-diameter containment collars as shown on the tank drawings.

b. Containment sumps in 40" diameter, provided by the tank manufacturer and designed for mounting in the containment collars, shall be supplied as shown on the tank drawings.

c. UL-listed adhesive shall be provided by the tank manufacturer with each containment collar and sump.

d. Containment collars and sumps shall be UL-listed for use with the manufacturer's tank.

e. Containment collars and sumps shall be designed and supplied as a containment system. Only sumps provided by the manufacturer shall be allowed.

2.12 FINISHES

Factory Coating: Unless otherwise specified, provide equipment and components fabricated from ferrous metal with the manufacturer's standard factory finish. Each factory finish shall withstand 500 hours exposure to the salt spray test specified in ASTM B117. For test acceptance, the test specimen shall show no signs of blistering, wrinkling, cracking, or loss of adhesion and no sign of rust creepage beyond 1/8 inch on either side of the scratch mark immediately after completion of the test. For equipment and component surfaces subject to temperatures above 120 degrees F, the factory coating shall be appropriately designed for the temperature service.

2.13 ACCESSORIES

a. Concrete Anchor Bolts: Concrete anchors shall conform to ASTM A307, Grade C, hot-dipped galvanized.

b. Bolts and Studs: Carbon steel bolts and studs shall conform to ASTM A307, Grade B, hot-dipped galvanized. Stainless steel bolts and studs that conform to ASTM A193/A193M, Grade 8.

c. Nuts: Carbon steel nuts shall conform to ASTM A563, Grade A, hex style, hot-dipped galvanized. Stainless steel nuts shall conform to ASTM A194/A194M, Grade 8.

d. Washers: Provide flat circular washers under each bolt head and each nut. Washer materials shall be the same as the connecting bolt and nut. Carbon steel washers shall conform to ASTM F844, hot-dipped galvanized. Stainless steel washers shall conform to ASTM A194/A194M, Grade 8.

PART 3 EXECUTION

3.1 INSTALLATION

Install work so that parts requiring periodic inspection, operation, maintenance, and repair are readily accessible. Handle storage tanks with extreme care to prevent damage during placement and install in accordance with the manufacturer's installation instructions and NFPA 30 or NFPA 30A, as applicable. Inspect the exterior surface of each tank for obvious

visual damage prior to and during the placement of each storage tank. Repair surface damage to a storage tank according to manufacturer's requirements before proceeding with the system installation. Provide the termination of fill lines within a tank with an antisplash deflector. Provide nylon dielectric bushings on pipe connections to a steel tank.

3.1.1 FRP Tank Handling

Handle tank with extreme care to prevent damage during installation and transportation to the site. Any damaged tank shall be replaced or repaired and tested under direct supervision and advice of the tank manufacturer, using the manufacturer's written procedures.

3.1.2 FRP Tank Installation Procedures

Set tank on a minimum of 1 foot of backfill material. Anchor tank with premanufactured concrete anchors as indicated through the use of manufacturer's supplied holddown straps. Follow tank manufacturers Installation Manual and Operating Guidelines.

3.1.3 Equipment

Properly level, align, and secure equipment in place in accordance with manufacturer's instructions. Provide supports for equipment, appurtenances, and pipe as required. Install anchors, bolts, nuts, washers, and screws where required for securing the work in place. Sizes, types, and spacings of anchors and bolts not indicated or specified shall be as required for proper installation.

3.2 FIELD QUALITY CONTROL

3.2.1 Aboveground Storage Tank Tightness Tests

Perform tightness tests on each aboveground storage tank prior to making piping connections. Perform testing in accordance with STI 700-50-5007 except as modified herein. Gauges used to monitor the tests shall have a scale with a maximum limit of 10 psig. Repair leaks discovered during the tightness tests in accordance with tank manufacturer's instructions. Following any repair, re-test the tank until the tank successfully passes the testing requirements of this paragraph.

3.2.2 Underground Storage Tank Tightness Tests

Perform a tightness test on each underground storage tank on-site just prior to their placement into the ground. Pneumatically pressurize each storage tank's primary chamber to 5 psig and monitor for a drop in pressure over a 2-hour period during which there shall be no drop in pressure in the tank greater than that allowed for thermal expansion and contraction. Following the successful completion of the primary chamber test, bleed the pressure from the primary chamber into the interstitial space. Maintain this pressure while applying soapsuds or equivalent material over the exterior of the tank. While applying the soapsuds, visually inspect the entire tank, including the bottom surfaces, for leaks (bubble formations). Inspection of the bottom surfaces of a tank may be performed by rotating the tank; however a tank shall only be rotated in strict accordance with the manufacturer's recommendations. Do not rotate a tank more than 90 degrees from the upright position. During testing, install a pressure relief device that relieves at the tank manufacturer's suggested pneumatic pressure limit. Gauges used in pneumatic tests shall have a scale with a

maximum limit of 10 psig.

3.2.2.1 Brine Level Test

In lieu of the pneumatic testing procedures described above, a brine level test may be performed on the interstitial space of double-walled FRP tanks (not applicable to steel tanks). For a brime level test, completely fill a FRP tank's interstitial space with a brine solution. Connect a riser pipe to the interstitial space that will allow the solution to rise up within the riser at least 12 inches. After filling the interstitial space, the tank shall set approximately 3 hours. Following the 3-hour period, measure and record the level of solution within the riser. After a subsequent 4-hour period, again measure and record the level of solution within the riser. If the level of solution within the interstitial decreases anytime during the test, the tank is considered leaking and therefore fails the test.

3.2.2.2 Repairs

Repair leaks discovered in either the primary chamber or the interstitial space in accordance with the tank manufacturer's instructions. Following any tank repairs, re-test the tank until the tank successfully passes the testing requirements defined herein.

3.2.3 Tank Manufacturer's Tests

In addition to the tests required herein, perform any additional tests (i.e., leak tests, cathodic protection verification tests, etc.) on each storage test that is required by the tank manufacturer's written test procedures. Manufacturer's tests that are redundant to tests already required by this specification will only be performed once per tank. Repair all leaks discovered during the tests in accordance with manufacturer's instructions. Following tank repairs, re-test the tank until the tank successfully passes the manufacturer's testing requirements.

3.2.4 System Commissioning

System commissioning shall conform to Section 33 08 55 COMMISSIONING OF FUEL FACILITY SYSTEMS.

3.3 DEMONSTRATIONS

Conduct a training session for designated Government personnel in the operation and maintenance procedures related to the equipment/systems specified herein. Include pertinent safety operational procedures in the session as well as physical demonstrations of the routine maintenance operations. Furnish instructors who are familiar with the installation/equipment/systems, both operational and practical theories, and associated routine maintenance procedures. The training session shall consist of a total of 8 hours of normal working time and shall start after the system is functionally completed, but prior to final system acceptance. Submit a letter, at least 14 working days prior to the proposed training date, scheduling a proposed date for conducting the onsite training.

3.4 Tank Fill Tests

Tank fill tests shall not be performed until after the flushing, cleaning, and adjusting requirements defined in Section 33 08 55 COMMISSIONING OF

FUEL FACILITY SYSTEMS. For the tank fill tests, initially fill each storage tank with fuel in order to verify the tank level alarm system operates properly and the tank overfill protection device functions as designed. Stop filling each tank immediately once the overfill devices operates. Do not overfill any storage tank more than the 98 percent level. Drain the system below the low liquid level setpoint to verify operation of the low level alarm. Correct and retest any problems with the level alarm system or the overfill device until each operate as specified herein. During the tests, verify that all tank gauges are calibrated and operating appropriately.

3.5 FIELD PAINTING

Painting required for surfaces not otherwise specified shall be field painted as specified in Section 09 97 13.27 EXTERIOR COATING OF STEEL STRUCTURES. Do not paint stainless steel and aluminum surfaces. Do not coat equipment or components provided with a complete factory coating. Prior to any field painting, clean surfaces to remove dust, dirt, rust, oil, and grease.

-- End of Section --

SECTION 33 56 13.13

ALTERATIONS TO STEEL TANKS WITH FIXED ROOFS
05/12

PART 1 GENERAL

1.1 REFERENCES

The publications listed below form a part of this specification to the extent referenced. The publications are referred to within the text by the basic designation only.

AMERICAN PETROLEUM INSTITUTE (API)

API MPMS 2.2A	(1995; R 2012) Measurement and Calibration of Upright Cylindrical Tanks by the Manual Strapping Method
API MPMS 2.2B	(1989; R 2007) Manual of Petroleum Measurement Standards Chapter 2: Tank Calibration - Section 2B: Calibration of Upright Cylindrical Tanks Using the Optical Reference Line Method
API MPMS 2.2C	(2002; R 2008) Manual of Petroleum Measurement Standards Chapter 2: Tank Calibration - Section 2C: Calibration of Upright Cylindrical Tanks Using the Optical Triangulation Method
API MPMS 2.2D	(2003; R 2009) Manual of Petroleum Measurement Standards Chapter 2: Tank Calibration - Section 2D: Calibration of Upright Cylindrical Tanks Using the Internal Electro-Optical Distance Ranging Method
API RP 2009	(2002; R 2007; 7th Ed) Safe Welding, Cutting, and Hot Work Practices in Refineries, Gasoline Plants, and Petrochemical Plants
API Std 650	(2013; Errata 2013) Welded Tanks for Oil Storage
API Std 653	(2009; Addendum 1 2010; Addendum 2 2012; Addendum 3 2013) Tank Inspection, Repair, Alteration, and Reconstruction

AMERICAN SOCIETY FOR NONDESTRUCTIVE TESTING (ASNT)

ASNT SNT-TC-1A	(2011; Text Correction 2013) Recommended Practice for Personnel Qualification and Certification in Nondestructive Testing

AMERICAN WELDING SOCIETY (AWS)

AWS A5.10/A5.10M	(2012) Welding Consumables - Wire Electrodes, Wires and Rods for Welding of Aluminum and Aluminum-Alloys - Classification
AWS QC1	(2007) Standard for AWS Certification of Welding Inspectors

ASME INTERNATIONAL (ASME)

ASME B16.11	(2011) Forged Fittings, Socket-Welding and Threaded
ASME B16.5	(2013) Pipe Flanges and Flanged Fittings: NPS 1/2 Through NPS 24 Metric/Inch Standard
ASME B16.9	(2012) Standard for Factory-Made Wrought Steel Buttwelding Fittings
ASME B31.3	(2012) Process Piping

ASTM INTERNATIONAL (ASTM)

ASTM A492	(1995; R 2013) Standard Specification for Stainless Steel Rope Wire
ASTM B209	(2010) Standard Specification for Aluminum and Aluminum-Alloy Sheet and Plate
ASTM B241/B241M	(2012; E 2013) Standard Specification for Aluminum and Aluminum-Alloy Seamless Pipe and Seamless Extruded Tube
ASTM B247	(2009) Standard Specification for Aluminum and Aluminum-Alloy Die Forgings, Hand Forgings, and Rolled Ring Forgings
ASTM E329	(2013b) Standard Specification for Agencies Engaged in the Testing and/or Inspection of Materials Used in Construction

NACE INTERNATIONAL (NACE)

NACE RP0285	(1993; R 2006) Standard for Industrial Controls and Systems Enclosures
NACE SP0169	(1988; R 1997) Standard for Specialty Transformers (Except General Purpose Type)
NACE SP0178	(2007) Design, Fabrication, and Surface Finish Practices for Tanks and Vessels to be for Immersion Service

U.S. DEPARTMENT OF DEFENSE (DOD)

MIL-DTL-83133	(2011; Rev H; Am 1 2013) Turbine Fuels,

Aviation, Kerosene Type, JP-8 (NATO F-34), NATO F-35 and JP-8 + 100 (NATO F-37)

U.S. NATIONAL ARCHIVES AND RECORDS ADMINISTRATION (NARA)

29 CFR 1910.27 Fixed Ladders

1.2 SUBMITTALS

Government approval is required for submittals with a "G" designation; submittals not having a "G" designation are for Contractor Quality Control approval. The following shall be submitted in accordance with Section 01 33 00 SUBMITTAL PROCEDURES:

SD-01 Preconstruction Submittals

Copies of API Publications; G

NACE Visual Comparator; G

Acknowledgement of surface finish requirements; G

Acknowledgement of API Std 650 and API Std 653; G

SD-02 Shop Drawings

Steel tank alterations; G

Floating pan; G

Overflow/Circulation Vents; G

Channel mounting pads; G

SD-03 Product Data

Carbon steel, pipe fittings, flanges, gaskets, and bolting; G

Structural steel; G

Floating pan; G

Mechanical tape level gauge; G

Gaskets for Manhole Covers and Stilling Well Flanges; G

Aluminum piping; G

Aluminum flanges; G

Antiseize compound; G

Floating Seal and Retrieval Winch; G

SD-05 Design Data

Floating pan design; G

SD-06 Test Reports

Visual examination of vertical shell-seam tack welds

Visual examination of shell butt welds

Visual examination of fillet welds

Pneumatic tests of reinforcing plates

Cathodic Protection System Verification Report

Submit reports for inspection of welds and radiographs to the Contracting Officer

SD-07 Certificates

Welding Procedure Specifications (WPS)

Welding Procedure Qualification Records (PQRs)

Welder Performance Qualification Records (WPQ)

Qualifications of tank Contractor

Qualifications of floating pan manufacturer

Qualifications of API Std 653 Inspector

Weld Inspector Certification

NDE Personnel Certification

Qualifications of Testing Agency

Tank calibration experience

SD-09 Manufacturer's Field Reports

Floating pan prototype fire test; G

Mill test reports; G

Impact Test Data; G

SD-10 Operation and Maintenance Data

Tank calibration table, Data Package 2

Electronic Calibration Table, Data Package 2

API Std 653 inspection reports, Data Package 2

Maintenance instructions, Data Package 2

Operator instructions, Data Package 2

Submit in accordance with Section 01 78 23 OPERATION AND MAINTENANCE DATA.

1.3 COPIES OF API PUBLICATIONS

Provide four copies of API RP 2009, API Std 650, and API MPMS 2.2A, API MPMS 2.2B, API MPMS 2.2C and API MPMS 2.2D to the Contracting Officer.

1.4 RELATED REQUIREMENTS

Materials, design, fabrication, welding, alterations, testing, and appurtenances shall be in accordance with API Std 650 and API Std 653, or as indicated and specified herein. Submit acknowledgement of API Std 650 and API Std 653 as required standards. Product to be stored in the tank is MIL-DTL-83133 F-24 turbine fuel. Section 05 50 13 MISCELLANEOUS METAL FABRICATIONS and Section 26 20 00 INTERIOR DISTRIBUTION SYSTEM apply to this section except as specified otherwise

1.5 DESIGN REQUIREMENTS

Design tank alterations to resist the following loads and forces:

a. Wind: 124 mph

b. Design specific gravity of liquid is 0.775 to 0.840.

c. Design shell and nozzles for a design liquid level equal to overflow condition.

1.5.1 Seismic Design Requirements

Seismic loads and forces shall be in accordance with API Std 650 Appendix E.

1.5.1.1 Shell Height Overflow/Circulation Vents

Shell height placement of overflow/circulation vents shall provide clearance between the pan at full overflow (bottom of pan at top of overflow) and the fixed roof that includes an allowance of at least 1.58 feet for sloshing due to seismic event.

1.5.2 Tank Nozzles

Design tank nozzles to accommodate external piping loads in accordance with API Std 650.

1.5.3 Tank Roof

Provide repair to tank roof as required for tank alteration work. Provide tank roof plates, lap welded with inner plates on top, and at least 1/4 inch thick (includes 1/16 inch corrosion allowance). Do not attach roof support members to the roof plate. Provide a roof with every part having a slope between 1-1/2:12 and 2:12.

1.5.4 Corrosion Allowance

Provide corrosion allowance of 1/16 inch in thickness of new steel for the interior of the shell, roof, and interior structural members.

1.5.5 Tank Bottom

Provide repair to tank bottom as required for tank alteration work. Tank

bottom and annular ring shall be as indicated. Bottom plates shall be lap welded with inner plates on bottom.

1.6 QUALIFICATIONS OF TANK CONTRACTOR

The Contractor shall be regularly engaged in the repair, alteration and reconstruction of API Std 650 tanks. The Contractor shall certify successful repair or alteration projects of at least 12 field erected API Std 650 aboveground tanks in the past three years. The information provided in the Contractor's certification shall include the date of the notice to proceed, date of completion, location of tank, Owner, Owner's point of contact, tank size, configuration (e.g. vertical AST, horizontal AST), product stored, and material of construction.

1.6.1 Welding Qualifications

Submit Welding Procedure Specifications (WPS), Welding Procedure Qualification Records (PQRs), and Welder Performance Qualification Records (WPQ). Qualify all welders on site. Complete all WPQs specifically for this project. Give the Contracting Officer notice and opportunity to witness each of the welder performance qualification tests 24 hours in advance of the performance of each of the tests.

1.7 TANK CALIBRATION EXPERIENCE

Perform calibration of the tank using a qualified organization that can certify to having performed successful and accurate calibration of at least eight tanks of comparable type and size within the last two years. Submit certified data on tank calibration experience.

1.8 QUALIFICATIONS OF FLOATING PAN MANUFACTURER

The floating pan manufacturer shall be regularly engaged in the manufacture and installation of floating pans in API Std 650 tanks. The manufacturer shall certify successful manufacture and installation by the manufacturer of at least 10 floating pans of the type specified in field erected API Std 650 aboveground tanks within the past five years. A minimum of five of those installations shall have been performed on US military installations. The information provided in the manufacturer's certification shall include the date of the notice to proceed, date of completion, location of tank, customer project number or construction contract number, Owner's point of contact, tank size, and construction type.

1.9 QUALITY ASSURANCE

1.9.1 Delivery and Storage Handling

Handle, store, and protect equipment and materials to prevent damage before and during installation in accordance with the manufacturer's recommendations, and as approved by the Contracting Officer. Replace damaged or defective items.

1.9.2 Steel Tank Alterations Drawing Requirements

Drawings for the steel tank alterations and floating pan installation shall be prepared, sealed, signed, and dated by a registered professional engineer. Include alteration diagrams and detail drawings of the tank roof, shell plates, wind girders, openings, and connections for fittings and appurtenances. The steel tank drawings shall include the following:

a. Tank alteration details showing dimensions, sizes, thickness, gages, materials, finishes, and erection procedures.

b. Tank component details to include as a minimum:

1. Floating pan (including details of support legs, manways, periphery seals, joint attachments, anti-rotation cables, and grounding cables).

2. Locations of floating pan pressure/vacuum vents and rim seals.

3. Internal pipe and fittings, including supports and bearing plates.

4. Location of alarm and level control switches.

5. Location of nozzles including nozzles for gauges and alarms.

6. Floating Pan Installation Hatch.

7. Circulation vents/inspection hatches.

8. Overflow port/circulation vent.

9. Tank Data Plate Plan and Information.

10. Stilling wells.

11. Scaffold Table Support.

1.9.3 Data Requirements

Calculations for the steel tank alterations design and floating pan design shall be prepared by a State registered Professional Engineer. Include calculations for the buoyancy of the floating pan and the structural stability of the floating pan when resting on the support legs. Steel tank alterations design calculations shall include calculations for the design of the shell penetrations, as well as calculations for the design of the roof penetrations.

1.9.4 Weld Inspector Certification

Contractor shall arrange for the services of an independent (not employee) weld inspector certified by the American Welding Society to oversee all weld tests and examinations required by API Std 650.

1.9.5 Test Reports

Test Reports shall consist of the following:

a. Records made by the AWS certified inspector for all duties performed per paragraph 4.2 of AWS QC1.

b. All Nondestructive Examination (NDE) (e.g.; radiograph, ultrasound, etc) reports with unique weld ID for each weld tested.

c. "Weld Map". These maps/drawings correlate the shop drawings submitted to the NDE reports. The NDE report that shows a weld number as acceptable is correlated with weld number on the drawings.

Provide the location of each weld, what procedure was used, which welder made the weld, the results of the visual test, and the results of the NDE.

1.9.6 Inspection and NDE Personnel

All inspection and NDE personnel shall be qualified in accordance with the following requirements. The contractor shall submit the qualifications of all the testing personnel that will perform all field tests for review by the Contracting Officer. The qualifications of all personnel on the job site that will perform welding inspections and NDE shall be submitted for approval. All inspectors and NDE examiners shall have a minimum of one (1) year experience inspecting the piping or plate material being used and five (5) years in military or commercial fueling systems or petroleum refineries, power generating plants, or chemical process plants.

1.9.6.1 NDE Personnel Certification

A written procedure/quality assurance program for the training, examination, certification, control and administration of NDE personnel shall be established. The procedures shall be based on appropriate specific and general guidelines of training and experience recommended by ASNT SNT-TC-1A. Submit proof of compliance of nondestructive test examiners with API Std 650 including, but not limited to, examiners performing radiographic (RT), visual (VT), penetrant (PT), ultrasonic (UT), and/or magnetic particle (MT) testing.

1.9.6.2 Qualifications of Testing Agency

The testing agency, testing laboratory, technical consultant or contractor's approved quality assurance organization shall meet the requirements of ASTM E329.

1.9.7 Qualifications of API Std 653 Inspector

Contractor shall arrange for the services of an independent (not employee) API Std 653 inspector. API Std 653 Inspector shall have a minimum of five years of experience. Submit copy of current certificate.

PART 2 PRODUCTS

2.1 MATERIALS

Conform to the following requirements except that materials not definitely specified shall conform to API Std 650.

2.1.1 Materials for Equipment, Pipe, and Fittings

a. All piping, and fittings 2.5 inches and larger shall be exterior coated carbon steel. All piping and fittings 2 inches and smaller shall be stainless steel. All valves larger than 2.5 inches shall be carbon steel with stainless steel trim. All valves 2 inches and smaller shall be stainless steel. DBB valves shall be as specified.

b. All piping and fittings inside the tank shall be exterior epoxy coated carbon steel except for piping 2 inches and smaller which shall have an uncoated interior. Stilling well and ladder material shall be as indicated.

c. Do not weld stainless steel to carbon steel, except where specifically indicated or specified.

d. If materials for equipment are not specified, they shall be stainless steel.

e. Provide stainless steel level switch housings.

2.2 STRUCTURAL STEEL

API Std 650. Provide mill test reports for shell plates, shell nozzle reinforcing plates, shell insert plates, and all steel plate used in construction of new shell penetrations. Provide impact test data when required by API Std 650 for the material group and thickness provided.

2.3 CARBON STEEL, PIPE FITTINGS, FLANGES, GASKETS, AND BOLTING

Carbon steel, pipe fittings, flanges, gaskets, and bolting shall be provided in accordance with Section 33 52 43 FUEL DISTRIBUTION (NON-HYDRANT), except gaskets inside tank and on roof nozzles shall be non-asbestos, fuel resistant composition, or preformed type. Flanges shall be weld-neck type in accordance with ASME B16.5. Threaded fittings shall conform to ASME B16.11 (3000 lb), and butt-welded fittings shall conform to ASME B16.9.

2.4 STAINLESS STEEL PIPE, FITTINGS, FLANGES, GASKETS, AND BOLTING

Stainless steel pipe, pipe fittings, flanges, gaskets, and bolting shall be provided in accordance with Section 33 52 43 FUEL DISTRIBUTION and API Std 650, except: flanges shall be weld-neck type in accordance with ASME B16.5, threaded fittings shall conform to ASME B16.11 (3000 lb), and butt-welded fittings shall conform to ASME B16.9.

2.5 ALUMINUM PIPING FOR STILLING WELLS

Aluminum pipe shall be ASTM B241/B241M, alloy 6061-T6, Schedule 40 for pipe sizes 2 inches through 12 inches; Schedule 80 for pipe sizes 2 inches and smaller.

2.6 BOLTING AND ALUMINUM FLANGES FOR STILLING WELLS

Aluminum flanges shall be ASME B16.5, Class 150 or Class 300 where indicated, Flat Face Type, except aluminum shall conform to ASTM B247, alloy 6061-T6 or alloy 356-T6. Aluminum flanges may be welding neck or slip-on type. Provide bolting in accordance with Section 33 52 43 FUEL DISTRIBUTION (NON-HYDRANT). Provide electrical isolation for separation of dissimilar metals.

2.7 WELDING FOR ALUMINUM PIPING

2.7.1 Process for Aluminum

ASME B31.3, Gas Tungsten Arc Welding (GTAW) Process or Gas Metal Arc Welding (GMAW) Process. Backing rings shall not be permitted.

2.7.2 Aluminum Welding Electrodes and Rods

AWS A5.10/A5.10M, ER5356 electrodes.

2.8 BOLTING FOR SHELL MANHOLE COVERS

Bolting for shell manholes shall be in accordance with Section 33 52 43 FUEL DISTRIBUTION (NON-HYDRANT).

2.9 GASKETS FOR MANHOLE COVERS AND STILLING WELL FLANGES

Provide composition asbestos-free, fuel and fire-resistant gaskets for shell manhole covers and stilling well flanges.

2.10 INTERIOR PROTECTIVE COATING SYSTEM

Section 09 97 13.15 REPAIR OF EPOXY/FLUOROPOLYURETHANE INTERIOR COATING OF WELDED STEEL PETROLEUM FUEL TANKS.

2.11 EXTERIOR PROTECTIVE COATING SYSTEM

Section 09 97 13.27 EXTERIOR COATING OF STEEL STRUCTURES.

2.12 APPURTENANCES

2.12.1 Floating Pan Installation Hatch

Provide permanent floating pan installation hatch on the tank roof. Provide with bolted cover and water tight gasket.

2.12.2 Floating Pan

The floating pan shall be naturally buoyant by means of honeycomb cell aluminum sandwich panels, be suitable for operation with liquids having a specific gravity of 0.70, be internal to the tank, have full surface contact with the fuel, be equipped with a seal at each penetration, and meet the requirements of API Std 650 Appendix H. A rim shall be provided around the floating pan periphery and extend a minimum of 6 inches above the free liquid surface. The rim shall contain turbulence and prevent fuel from splashing up onto the top surface of the floating pan.

2.12.2.1 Pan Integrity

The floating pan shall support the following loading conditions without causing damage to the pan, sinking the pan, or allowing product to spill onto the top surface of the pan in the event the pan is punctured.

a. A uniform load of three times the weight of the pan.

b. A point load of 500 pounds on a one square foot area anywhere on the floating pan while it is floating or resting on the legs.

2.12.2.2 Floating Pan Prototype Fire Test

Perform a fire test on another floating pan design of the same manufacturer that is constructed from the same materials and joining method of the pan being proposed and that meets the floating pan specification in aviation turbine fuel or motor gasoline with a flash point of less than 20 degrees F. Submit manufacturer's certification of fire test indicating the manufacturer's floating pan design has been successfully fire tested and that both of the following tests were successfully performed, without significant damage to the pan, sinking the pan or the fire spreading to the whole surface of the fuel.

a. Hole Fire: The test-floating pan shall have a 12 inch or larger diameter hole cut through it. After being lit, the fuel in the hole shall burn for a minimum of 2 hours.

b. Rim Fire: After being lit, the fuel around the test rim section shall burn for a minimum of 2 hours.

2.12.2.3 Joint Connections

Aluminum sandwich panels shall be joined together by means of a gasketed joint that transmits loads without structural failure or leakage.

2.12.2.4 Aluminum Extrusions

Extrusions shall be made from alloy 6063-T6 in accordance with ASTM B209.

2.12.2.5 Aluminum Sandwich Panels

Panels shall be made from alloy 3003 H14, 3003 H16, 3105 H14, or 5010 H24 in accordance ASTM B209. The skin of the panels shall have a minimum thickness of 0.014 inches. The core of the panels shall be one inch aluminum honeycomb.

2.12.2.6 Support Legs

Floating pan shall be provided with two position self-draining legs that are designed to support a uniform load of 12.5 pounds per square foot. The legs shall be tubular structural members at least 2 inches in diameter and ride with the pan when the fuel level is above the high leg position. The low position shall be as indicated and the high position shall be 75 inches above the shell-to-bottom joint. The exact location and number of the support legs shall be as recommended by the floating pan manufacturer. Provide each support leg with a 2.5 inch polytetrafluoroethylene (PTFE) foot securely fastened to the bottom end of the leg. The portion of the PTFE foot below the metal leg shall be 1 inch thick. The PTFE foot shall be slotted on one side to allow for drainage. The legs shall be capable of allowing a person, standing on top of the floating pan while the tank is in service, to perform the following functions:

a. Change from the high to the low position.

b. Change from the low to the high position.

c. Completely remove the legs.

d. Adjust the legs vertically a distance equal of plus or minus 3 inches.

2.12.2.7 Periphery Seals

Periphery seals shall be flexible wiper squeegee and made of closed cell cast urethane or approved fuel resistant material of 100 percent aromatic resistance. The periphery seal shall fit the space between the tank shell and the outer edge of the floating pan with two flexible seals, a primary and a secondary. The seals, primary and secondary as a unit, shall accommodate a deviation between the path of the floating pan relative to the tank shell of an additional 4 inches of compression and an additional extension of 2 inches from its normal compressed position at any fluid level. The primary seal shall be above the liquid level. Foam filled

coated-fabric seals shall not be accepted. The secondary seal shall be above the primary seal. Seals shall be capable of being replaced during tank operations, be durable in the tank's environment, be abrasion resistant, and not discolor or contaminate the liquid stored in the tank.

2.12.2.8 Penetrations

All penetrations shall have a rim that extends a minimum of 6 inches above the free liquid to contain product turbulence and prevent the tank product from splashing up onto the top surface of the floating pan.

2.12.2.9 Manhole

Provide 36 inch combination floating pan manhole and pressure/vacuum vent. Manhole shall have a clear inside diameter of at least 36 inches. Manhole shall have a rim that extends a minimum of 6 inches above the free liquid to contain product turbulence and prevent the tank product from splashing up onto the top surface of the floating pan. The manhole cover shall be equipped with a ground cable connected to the floating pan.

2.12.2.10 Grounding Cables

Provide two or more 3/16-inch diameter, stranded, extra-flexible, stainless steel, wire rope ground cables. Each cable shall extend from the top of the floating pan to the fixed roof and shall be long enough to accommodate the full travel of the pan. The exact location, number, and size of grounding cables shall be as recommended by the floating pan manufacturer.

2.12.2.11 Anti-Rotation Cable

Provide a minimum of three 1/4-inch diameter anti-rotation cables made of 304 stainless steel conforming to ASTM A492. Fittings for anti-rotation cables including cable clamps, pins, sockets, turnbuckles, U-bolts and nuts, etc. shall be 304 stainless steel. Cable shall be made taut by means of the turnbuckle. The exact location, number, and size of the anti-rotation cables shall be as recommended by the floating pan manufacturer.

2.12.3 Tank Level Alarm System

2.12.3.1 High and High-High Level Switches

Readjust and configure insertion length of the existing liquid level switches (High, High-High) located on top of the tank for alarm setpoints in accordance with the tank schedule indicated on drawings.

Information from an existing liquid level switch data plate:

Serial No. 100707076
Model No. 733A-F4C-B-F5-N7-TTSLMC

2.12.4 Floating Seal and Retrieval Winch

Provide a floating seal, retrieval cable, weight, and a retrieval winch on sample gauge roof nozzle equipped with fully slotted stilling well. Floating seal shall move freely inside the stilling well with the rise or fall in liquid level while providing a double seal against the escape of vapors from the stilling well. Seal elastomers shall be Buna-N and shall

seal at approximately the same level as the stilling well floating pan penetration seal (approximately 6 inches above the level of the liquid). Retrieval winch and cable shall be capable of retrieving floating seal into a storage compartment mounted on top of the stilling well nozzle. All fasteners shall be stainless steel; all other metallic components of float and seal shall be aluminum. Storage compartment and components, except for bearings, shall be stainless steel. The retrieval cable shall be 1/8 inch stainless steel. Storage compartment shall be equipped with a latch and hinge so that the compartment (with a fully retrieved float, cable, and weight) and winch can be temporarily moved out of the way to provide access to the stilling well. Latch and hinge shall be designed to hold the compartment securely to the nozzle in winds up to 125 mph. Storage compartment flange shall also be provided with a rain lip to provide a weather tight seal around the top of the roof nozzle. Winch shall be hand operated, shall require no more than 5 pounds of force to operate, and shall be equipped with an anti-reverse mechanism and operator that may be disengaged from the retrieval spool when not being operated manually. When disengaged from the winch, the retrieval spool shall maintain tension on the retrieval cable not exceeding the weight of the cable and the weight.

2.12.5 Mechanical Tape Level Gauge

Alter existing mechanical tape level gauge with float to attach to new internal floating pan. The mechanical tape level gauge shall be complete with all necessary incidental pipe, pulleys, fittings, supports, support brackets, tension springs, and guide wire assemblies. The gauge shall automatically provide the location of the floating pan within plus or minus 1/8 inch of the actual liquid level. The head shall be made of aluminum and shall be mounted on the exterior of the tank shell approximately 54 inches above the tank bottom. The head shall contain a glass covered window complete with an inside wiper. The seals shall be made of Teflon. The shafts, graduated tape, and tape drum assembly shall be made of stainless steel. The tape shall be of sufficient length to measure the liquid level from the bottom to the top of the storage tank. Gauge measurements shall be graduated in 1/16 inch increments. The tape shall be carried over pulleys housed in elbow assemblies at each change of direction.

2.12.6 Venting

Provide tank venting as indicated.

2.12.6.1 Overflow/Circulation Vents

Provide open overflow/circulation vents on the upper shell as indicated and in accordance with API Std 650, Appendix H. Provide vents with stainless steel bird screen with 2.0 square feet of net open area minimum. Insect screens shall not be allowed.

2.12.7 Roof Perimeter Guardrail Alteration

Construction of roof perimeter guardrail shall be as-detailed on the drawings and in accordance with OSHA. Finishing of roof perimeter guardrail shall be similar to the stairway. Cut railing as required where roof circulation vent/inspection hatches to be installed. Provide safety chain between guardrail posts as detailed on drawings.

2.12.8 Internal Ladders

OSHA 29 CFR 1910.27. Provide a new internal ladder extending from the roof manhole to the tank bottom as indicated. Removal of existing shell mounted ladder is required for installation of internal floating pan. Provide new ladder with aluminum safety rail as indicated. Provide removable aluminum safety rail extension as indicated. Provide two 2 1/2 inch sch 40 pipe 2 1/2 inches long. Weld one of the pipes to the top rail of the roof perimeter guardrail near the roof manhole. Weld the second pipe to the toeboard directly below the first for storing the removable safety rail extension.

2.12.9 Roof Circulation Vent/Inspection Hatches

Provide stainless steel roof vent/inspection hatches in the fixed roofs of aboveground storage tanks as indicated and in accordance with API Std 650, Appendix H. Each roof vent/inspection hatch shall be provided with a roof reinforcing plate the same thickness as the roof plate. Provide with stainless steel bird screen with 1/2 inch square openings and 2.0 square feet of net open area minimum. Insect screens shall not be allowed.

2.12.10 Scaffold Cable Support

Provide two scaffold cable supports on the tank roof in accordance with API Std 650. Locate the support near the center of the tank and in a manner that supported cables will have maximum range and flexibility of operation with minimum interference with other tank fittings.

2.12.11 Antiseize Compound

Provide marine grade antiseize compound for fasteners on tank exterior flanges and bolted connections and covers. On tank interior fasteners, use oil only.

2.12.12 Channel Mounting

Provide seal welded channel mounting pads with seal welded stainless steel bolting studs for mounting channel to support conduit, tubing, and level alarm test/drain piping. Rack tubing, small piping, and conduit parallel to the shell as indicated. Do not mount within 7 feet above stairway.

PART 3 EXECUTION

3.1 SAFETY PRECAUTIONS

API RP 2009 for fire and explosion hazard areas.

3.2 API Std 653 INSPECTION REPORTS

The API Std 653 inspector and state licensed Professional Engineer shall inspect the completed tank in accordance with API Std 653 and deliver a full report to the Contracting Officer. Provide electronic copies of the tank inspection reports to MAJCOM, Service Headquarters, Service Control Points, and DLA-Energy. The paper and electronic copies of the report shall be provided to the Contracting Officer for filing with the tank's "as-built drawings." Refer to Section 01 45 00.00 20 NAVFAC QUALITY CONTROL for API Std 653 inspector certification requirements.

3.3 CONSTRUCTION

3.3.1 Accessibility

Install all work so that parts requiring periodic inspection, operation, maintenance, and repair are readily accessible. Install concealed valves, expansion joints, controls, dampers, and equipment requiring access in locations freely accessible through access doors.

3.3.2 Tank Alterations Work Site Superintendent

Tank alterations work site superintendent shall be on site at all times during any work by that crew.

3.3.3 Floating Pan Superintendent

Floating pan superintendent shall be on site at all times during any work by the crew.

3.3.4 Tank

Reinforce openings larger than 2 inches in diameter through plating of the tank shell and roof. Provide structural stiffening, consisting of rings, thicker plates, or other approved means, to maintain roundness when the tank is subjected to wind or seismic loads.

3.3.5 Roof Plate Seams

Tank roof plate shall be lap welded with the plates closer to the center of the tank on top.

3.3.5.1 Prohibition of Protective Coatings on Surfaces to be Welded

Remove existing protective coatings on surfaces to be welded and on surfaces not less than two inches from weld preparation. "Weld-through" inorganic zinc coatings and similar coatings will not be permitted.

3.3.6 Surface Finishing

Provide Contracting Officer with NACE visual comparator as described in NACE SP0178 Section 4. Finish interior surfaces before hydrotesting, in accordance with Section 4 of NACE SP0178 and accompanying Visual Comparator, to the condition described and shown for NACE Weld Designation "C" welds. Finish exterior surfaces, in accordance with Section 4 of NACE SP0178 and accompanying Visual Comparator, to the condition described and shown for NACE Weld Designation "D" welds. Submit acknowledgement of surface finish requirements. Remove all weld splatter, sharp corners, edges and points from all carbon steel surfaces before coating. Protect all remaining interior coating not impacted by alterations work from surface preparation and weld splatter.

3.3.7 Attachments

All exterior shell and roof attachments shall be connected to the tank using continuously welded mounting plates. Mounting plates shall exceed the size of the attachment by a minimum of 1 inch. All mounting plate corners shall have a 1 inch radius. Attachment shall be seal welded to the mounting plate with structurally sound welds of sufficient size to support the intended loads.

3.3.8 Nozzles

All shell nozzles shall be flanged type. Shell nozzles sizes 2 inches or larger shall have a reinforcing plate. Nozzles for pipe connections inside the tank shall be flanged inside near the shell. Reinforcing plates for shell nozzles shall be rolled to the curvature of the shell.

3.4 INSTALLATION OF INTERNAL FLOATING PAN

Install floating pan after coating of the interior of the tank is complete. Protect tank coatings during installation of floating pan to prevent damage. Repair damage to the coating that may occur during the installation of the pan.

3.5 END CONNECTIONS FOR EQUIPMENT, VALVES, PIPE, AND FITTINGS

All valve, equipment, pipe and fitting connections including, but not limited to, level switches shall be welded or flanged except as indicated. Piping and fittings 2.5 inches and larger shall be butt welded. Piping and fittings 2 inches and smaller may be butt welded or socket welded. Threaded connections shall not be allowed except where welded or flanged connections to appurtenances are not available, e.g., pressure gauges, fuel sample connections, and level switch probes.

3.6 FIELD QUALITY CONTROL

The Contracting Officer will conduct field inspections and witness field tests and trial operations specified in this section. The Contractor shall perform all trial operations and field tests and provide all labor, equipment and incidentals required for testing.

3.6.1 Tank Calibration Table

After alterations to each tank is complete, provide two calibration tables stamped by a Professional Engineer, one in English units and one in metric units. Tables shall be laminated. Both tables shall show the volume of the fuel for all liquid levels in the tank starting at the bottom of the sump and going up to the level of the overflow. The English unit calibration table shall show the volume of fuel in gallons and in barrels of 42 gallons and the level of the fuel in 1/16-inch increments. The metric table shall show the volume of the fuel in liters and in m3 and the level of the fuel in 2.0 mm increments. The table shall include notes at the bottom indicating 42 gallons = 1 barrel; and one kiloliter = one cubic meter. Volume calculations shall be in the smaller units. Larger units may be obtained by rounding off. The 0 inch level shall be the level of the bottom of the shell. Level below the bottom of the shell shall be shown in negative units starting at the bottom of the shell. The level of the bottom of the shell, alarm set points, high level shut off valve actuation point, and the level of the overflows shall be identified on the calibration table (strapping chart). The table shall not include tank volume above the level of the overflows. Also, provide Electronic Calibration Table compatible with the Electronic Automatic Tank Gauging System. Contact Contracting Officer for direction on required format.

3.6.1.1 Tank Calibration Method

The tank gauging systems shall be calibrated in accordance with the API Manual of Petroleum Measurement Standards (API MPMS) for critical

measurement using methods outlined in one of the following chapters.

a. API MPMS 2.2A, Measurement and Calibration of Upright Cylindrical Tanks by the Manual Strapping Method.

b. API MPMS 2.2B, Calibration of Upright Cylindrical Tanks Using the Optical Reference Line Method.

c. API MPMS 2.2C, Calibration of Upright Cylindrical Tanks Using the Optical Triangulation Method.

d. API MPMS 2.2D, Calibration of Upright Cylindrical Tanks Using the Internal Electro-Optical Distance Ranging Method.

3.6.2 Weld Inspection

Perform inspection of welds in accordance with API Std 650. Inspect butt welds requiring complete penetration and complete fusion by the radiographic method. Inspect roof support column welds below design liquid level by visual and dye penetrant methods. Submit the following weld inspection reports to the Contracting Officer:

a. Visual examination of vertical shell-seam tack welds, if left in place, in butt welds. Only if shell welds are affected by alterations.

b. Radiographic examination of shell butt weld.

c. Visual examination of shell butt welds.

d. Visual examination of fillet welds.

e. Pneumatic tests of reinforcing plates.

3.6.3 Reports of Other Tests and Examinations

Submit reports of the results of the following examinations and tests required by API Std 650 and API Std 653 to the contracting officer.

a. Hydrostatic Testing Exemption Letter.

3.6.3.1 Hydrostatic Testing Exemption Letter

All tank alterations and repair completed by contractor shall be reviewed and approved by a state licensed professional engineer experienced in storage tank design and alterations. The engineer shall provide in writing a letter to the Contracting Officer that all repairs and alterations were completed and tested per the requirements of API Std 650 and API Std 653 and recommends taking the hydrostatic testing exemption as allowed by API Std 653.

3.6.4 Fill Test and Related Miscellaneous Tests

3.6.4.1 Fill Test

After application and cure of the interior and exterior coatings, fill test the tank using fuel per the requirements in Section 33 08 55 COMMISSIONING OF FUEL FACILITY SYSTEMS. Tank piping and appurtenances shall be ready for service. The Government will provide the necessary fuel and labor to fill the tank with fuel. Advise the Contracting Officer, in writing, at least

14 calendar days in advance of the need for this service and provide access to the interior of the tank for the Contracting Officer's inspection to ensure the tank is clean and dry to the Government's satisfaction prior to receiving fuel.

a. Floating Pan Tests

Following the installation of a floating pan, the deck penetrations and rim area shall be subjected to a visual inspection for seal tightness. Leaks or seal deformations shall be corrected according to manufacturer's recommendations. Following the seal inspection, the floating pan shall be subjected to a flotation test. The tank shall be filled to the 10 foot level with fuel and the top of the floating pan shall be visually inspected for fuel leakage. The appearance of damp spots on the top of the floating pan shall be considered evidence of leakage; the Contracting Officer shall be notified and the fuel removed immediately. Leaks shall be repaired and the flotation test performed again.

3.6.5 Cathodic Protection System Verification Report

Contractor shall provide a NACE certified inspector to inspect and test the existing impressed current cathodic protection system for tanks T-501 and T-502 after all tank alterations are complete. Verification tests shall be conducted in accordance with NACE SP0169 and NACE RP0285. Results shall be compared to last annual test report to verify cathodic protection of tank bottoms has not been altered by this contract's work and the system is functioning as designed.

3.6.6 Maintenance Instructions

Provide the following instructions in the Operation and Maintenance Data as follows: Schedule periodic recalibration of ATG at 15 year intervals in accordance with API Manual of Petroleum Measurement Standard (API MPMS) Chapter 2.0 for tanks in custody transfer service and at 15-20 year intervals for all others, or when operating variables of the storage tank change, or when internal dimensions and structural variables of the tank change.

3.6.7 Operator Instructions

Provide the following instructions in the Operation and Maintenance Data as follows:

a. Inspect the tank bottom to foundation perimeter mastic seal quarterly for deterioration and request maintenance when deterioration is found.

b. Keep the leak detection tell-tale valve/valves normally closed. Temporarily open the valves to check for tank bottom leaks on a monthly basis.

c. Test the high and high-high level alarm switches semiannually. Test level switches by simulating product levels either manually or by operating the water stripping system pump and level alarm/control

test/drain header valves.

d. Examine and clear the tank venting semi-annually to insure the vents have not become plugged.

-- End of Section --

SECTION 33 57 00

BULK FUEL RECEIVING/DISPENSING EQUIPMENT
08/11

PART 1 GENERAL

1.1 REFERENCES

The publications listed below form a part of this specification to the extent referenced. The publications are referred to within the text by the basic designation only.

AMERICAN PETROLEUM INSTITUTE (API)

API MPMS 5.3	(2005; 5th Ed) Measurement of Liquid Hydrocarbons by Turbine Meters
API RP 1004	(2003; 8th Ed) Bottom Loading and Vapor Recovery for MC-306 and DOT-406 Tank Motor Vehicles

ASME INTERNATIONAL (ASME)

ASME B16.5	(2013) Pipe Flanges and Flanged Fittings: NPS 1/2 Through NPS 24 Metric/Inch Standard
ASME B31.3	(2012) Process Piping

ASTM INTERNATIONAL (ASTM)

ASTM A312/A312M	(2013b) Standard Specification for Seamless, Welded, and Heavily Cold Worked Austenitic Stainless Steel Pipes
ASTM B117	(2011) Standard Practice for Operating Salt Spray (Fog) Apparatus

NATIONAL ELECTRICAL MANUFACTURERS ASSOCIATION (NEMA)

NEMA 250	(2008) Enclosures for Electrical Equipment (1000 Volts Maximum)

NATIONAL FIRE PROTECTION ASSOCIATION (NFPA)

NFPA 30	(2012; Errata 2011; Errata 2011) Flammable and Combustible Liquids Code
NFPA 407	(2012; TIA 11-1) Standard for Aircraft Fuel Servicing
NFPA 70	(2014; AMD 1 2013; Errata 2013; AMD 2 2013) National Electrical Code

SOCIETY OF AUTOMOTIVE ENGINEERS INTERNATIONAL (SAE)

SAE AMS3275	(2009; Rev C) Sheet, Acrylonitrile Butadiene (NBR) Rubber and Non-Asbestos

Fiber Fuel and Oil Resistant

U.S. GENERAL SERVICES ADMINISTRATION (GSA)

CID A-A-59326	(Rev D) General Specification For Coupling Halves, Quick-Disconnect, Cam-Locking Type

UNDERWRITERS LABORATORIES (UL)

UL 913	(2006; Reprint Sep 2011) UL Standard for Safety Intrinsically Safe Apparatus and Associated Apparatus for Use in Class I, II, and III, Division 1, Hazardous (Classified) Locations

1.2 SYSTEM DESCRIPTION

Equipment specified herein shall be designed to handle a working pressure of 275 psig at 100 degrees F. Equipment specified herein shall be compatible with the fuel to be handled.

1.3 SUBMITTALS

Government approval is required for submittals with a "G" designation; submittals not having a "G" designation are for Contractor Quality Control approval. The following shall be submitted in accordance with Section 01 33 00 SUBMITTAL PROCEDURES:

SD-03 Product Data

Truck Fillstand Loading Arm; G
Pressure Indicating Transmitter; G
Recondition Positive Displacement Meters; G
Turbine Meter Assemblies; G
Dry-Break Coupler; G
Control Stations
Flash Point Monitor; G
Additive Injector; G

SD-10 Operation and Maintenance Data

Truck Fillstand Loading Arm; Data Package 3
Pressure Indicating Transmitter; Data Package 5
Recondition Positive Displacement Meters; Data Package 3
Turbine Meter Assemblies; Data Package 4
Control Stations
Flash Point Monitor; Data Package 4
Additive Injector; Data Package 4

1.4 QUALITY ASSURANCE

1.4.1 Material and Equipment Qualifications

Provide materials and equipment that are standard products of a manufacturer regularly engaged in the manufacturing of such products, that are of a similar material, design and workmanship. Materials and equipment shall have been in satisfactory commercial or industrial use for a minimum two years prior to bid opening. The two year period shall include applications of the equipment and materials under similar circumstances and

of similar size. Materials and equipment shall have been for sale on the commercial market through advertisements, manufacturers' catalogs, or brochures during the two year period.

1.4.2 Nameplates

Attach nameplates to all specified equipment, gauges, and valves defined herein. List on each nameplate the manufacturer's name, address, component type or style, model or serial number, catalog number, capacity or size, and the system that is controlled. Construct plates of stainless steel. Install nameplates in prominent locations with nonferrous screws, nonferrous bolts, or permanent adhesive. Minimum size of nameplates shall be 1 by 2-1/2 inches. Lettering shall be the normal block style with a minimum 1/4 inch height. Accurately align all lettering on nameplates. Key the nameplates to a chart and schedule for each system. Frame charts and schedule under glass, and locate where directed near each system. Furnish two copies of each chart and schedule. Each nameplate description shall identify its function.

1.5 DELIVERY, STORAGE, AND HANDLING

Handle, store, and protect equipment and materials to prevent damage before and during installation in accordance with the manufacturer's recommendations, and as approved by the Contracting Officer. Replace damaged or defective items.

PART 2 PRODUCTS

2.1 MATERIALS

Internal parts and components of equipment, piping, piping components, and valves that could be exposed to fuel during system operation shall not be constructed of zinc coated (galvanized) metal, brass, bronze, or other copper bearing alloys. Do not install cast iron bodied valves in piping systems that could be exposed to fuel during system operation.

2.1.1 Nitrile Butadiene (Buna-N)

Provide Buna-N material that conforms to SAE AMS3275.

2.1.2 Acrylonitrile Butadiene Rubber (NBR)

Provide NBR material that conforms to SAE AMS3275.

2.2 ELECTRICAL WORK

2.2.1 General

Provide motors, motor starters, controllers, integral disconnects, contactors, controls, and control wiring with their respective pieces of equipment, except controllers indicated as part of motor control centers. Provide electrical equipment, including motors and wiring, as specified in Section 26 20 00 INTERIOR DISTRIBUTION SYSTEM.

2.3 FLANGED END CONNECTIONS

2.3.1 Flanges

Flanges shall be in accordance with Section 33 52 43 FUEL DISTRIBUTION

(NON-HYDRANT).

2.3.2 Flange Gaskets

Gaskets shall be in accordance with Section 33 52 43 FUEL DISTRIBUTION (NON HYDRANT).

2.3.3 Flange Protectors

Flange protectors shall be be provided in accordance with Section 33 52 43 FUEL DISTRIBUTION (NON-HYDRANT).

2.3.4 Flange Bolts, Nuts, and Washers

Flange bolts, nuts, and washers shall be provided in accordance with Section 33 52 43 FUEL DISTRIBUTION (NON-HYDRANT).

2.4 TRUCK FILLSTAND LOADING ARM

Truck fillstand loading arm shall be the factory fabricated, factory assembled, bottom loading type. Loading arm shall include swivel joints, boom assemblies, counter balance spring, and riser standpipe. Loading arm's pipe and fittings shall be Schedule 10S, Grade TP304L, stainless steel in accordance with ASTM A312/A312M. Provide adjacent loading arm assemblies with the ability to crossover one another during operation.

2.4.1 Dispensing End

The weight of the loading arm's dispensing end (includes piping, valves, nozzles, miscellaneous components, and fuel weight) shall be counteracted by a counterbalance system. The counterbalance system shall be the spring counterweight type. The counterbalance system shall allow one operator to manually maneuver and control the dispensing end at all times. The counterbalance system shall ensure that minimum force is transferred from the dispensing end to a fueling connection. Nozzle in the dispensing end shall be in accordance with paragraph API TRUCK COUPLERS.

2.4.1.1 Hose Loader Type

Dispensing end shall be the fixed reach, hose loader type. Drop hose shall be of an inner T321 stainless steel corrugated metal hose restrained by a single braided outer T304 stainless steel cover. The overall length of the connector shall vary based on the elevation for the loading arms. Refer to the drawings for the loading arm elevations. The working pressure for the flexible hose shall be 285 psig for Class 150 systems. End connections shall be ASME B16.5, 150 lb class and facing of the connecting equipment and piping. Provide protective spring guard to protect the braided hose.

2.4.2 Swivel Joints

Swivel joints shall be the flanged, non-lubricated type with non-lubricated bearings. Swivel joints shall come from the manufacturer with required flanged bodies and flanged elbows. Welded swivel joints and welding of swivel joints to the pipe and/or elbow will not be permitted. Welding of swivel joints to flange joints will not be permitted. Swivel joints shall be warranted for two years against leakage due to both positive and negative pressure conditions. Swivel joints shall be capable of 360 degree rotation.

2.5 PRESSURE INDICATING TRANSMITTER

The pressure indicating transmitter shall be a two-wire microprocessor-based transmitter utilizing a solid-state, silicon pressure sensor. The transmitter accuracy shall be minus 0.20 percent of calibrated span including combined effects of linearity, hysteresis and repeatability. The transmitter may be more accurate. Transmitter shall not require recalibration due to power outages. The pressure indicating transmitter shall be rated for up to 275 psig. Connection to the pipe shall be made on the side of the pipe (90 degrees from the top).

a. Transmitter output shall be a 4-20 mA dc, linear signal between 0-100 percent of the input. It simultaneously will produce a digital HART output signal.

b. Transmitter body shall be stainless steel with stainless steel isolating diaphragms and silicone oil fill.

c. Transmitter shall operate on voltage as indicated in design drawings. Transmitter shall be provided with a 4 1/2 or 5 digit, digital LCD display capable of being read in low/no light conditions. Indicator scale shall be in pounds per square inch gauge for positive pressure ranges.

d. Transmitters shall be UL or FM listed. Transmitter enclosure shall be rated for an explosion-proof environment in accordance with NFPA 70 for Class I, Division I, Group D locations.

e. Provide each transmitter with a 2-valve instrument manifold, one valve for isolation, the second valve for venting. The manifold body shall be 316 stainless steel with 1/2-inch FNPT process, instrument, and vent connections. The valves shall have a delrin seat and viton O-ring bonnet packing. Provide the manifold with a mounting kit. Provide a stainless steel plug in the vent connection.

2.6 PUMPS

Provide pumps as specified in Section 33 52 43.23 AVIATION FUEL PUMPS.

2.7 FLOW CONTROL VALVES

Flow control valves shall be in accordance with 33 52 43.14 CONTROL VALVES, FUEL SYSTEM.

2.8 RECONDITION POSITIVE DISPLACEMENT METERS

The existing Smith Meter® (Model F4-S3) double-case, straight-through rotary vane, positive displacement meter shall be reconditioned by the manufacturer. An evaluation by the manufacturer, shall dictate the extent of the required replacement or repair of worn or damaged components to bring the meter to like new condition. The meter is temperature compensated. The meter flanges are ASME B16.5, raised face, 150 lb. flanges rated up to 285 psig. Reconditioned meters (JP-5, F-24, and F-76) shall use polytetrafluoroethylene (PTFE) for O-ring cover, packing gland, and O-ring packing gland replacement.

Information from an existing meter data plate:
Serial No. P655652081
Assembly No. YPDDC-1329

Flow Range: 600-120 GPM

2.8.1 Pulse Output Device

The existing meters pulse transmitters shall be re-used. Existing pulse transmitters are Smith Meter® Model UPT (Universal Pulse) Transmitter. The UPT is a photo-electric, dual channel, high resolution, pulse generator that is directly connected to the output shaft of a positive displacement meter.

Information from an existing pulse output device data plate:
Model Number: XU-1000-STD-01
Serial No. MB041A
Assembly No. 554665-020

2.9 TURBINE METER ASSEMBLIES

2.9.1 Turbine Meter

The turbine meter shall be a rimmed, rotor-type meter with helical blades, supported by upstream and downstream stators. The meter shall be suitable for a uni-directional normal flow rate. Minimum flow rate of the turbine meters shall be 20 percent of stated maximum in. Linearity shall be plus or minus 0.15 percent over the normal flow range and repeatability plus or minus 0.02 percent. End connections shall be ASME B16.5, Class 150 raised-face flanged. Meter body shall be carbon steel with stainless steel internals and tungsten carbide bearings. The temperature range of operation of the turbine meter shall be minus 100 degrees F to plus 225 degrees F. Provide with dual pickup coils and dual preamplifiers in two UL Listed Class I, Div. 1, Group C and D junction boxes. The preamplifiers input power shall be 24 Vdc. Output shall be a 12V minimum square wave pulse.

2.9.2 Flow Straightening Assembly

Provide a flow straightening assembly upstream of the turbine meter to condition the fluid velocity profile. The assembly shall be designed and manufactured to meet the requirements of API MPMS 5.3 and ASME B31.3. The pipe segments shall be standard weight carbon steel with ASME B16.5, raised face flanged end connections of the same class as the piping system. The flow straightening assembly shall be from the same manufacturer as the turbine meter.

2.9.2.1 Upstream Assembly

The flanged assembly upstream of the turbine meter shall be 10 diameters total length and include an in-line straightening vane insert. There shall be three pipe diameters prior to the straightening vane insert, two pipe diameters of straightening vanes, and five pipe diameters downstream of the straightening vanes. The straightening vane insert shall be stainless steel.

2.9.2.2 Downstream Assembly

Downstream of the meter shall be a minimum of five diameters of straight pipe without bends, tees, or change in diameter.

2.9.3 Flow Computer

All flow meters used by the AFHE system shall be interfaced with the AFHE system via a flow computer. The standardized software interface exists in the Factory Link SCADA package to interface these devices to the system without development of additional communication protocols.

The flow computer shall have the following minimum features:

a. Voltage as indicated on design drawings,

b. accept two uni-directional flow signals from measuring devices,

c. flow signals from meters shall be pulse inputs from the turbine meters, and 4-wire RTD for temperature compensation measurement,

d. accepts a minimum of four other analog inputs,

e. accepts a minimum of four digital inputs,

f. accepts two serial communications connections, RS-232 and RS-485,

g. support for Modbus protocol,

h. outputs: two pulse/contact outputs, 3 contact outputs, and two analog outputs.

2.9.4 Thermowells

Thermowell shall be tapered flanged type constructed of 316 stainless steel. The process connection shall be 1-inch ASME B16.5, raised face flanged of the class of the piping in which it is installed.

2.9.5 Temperature Probe

The temperature probe shall be an RTD type to provide input to the remote electronic meter register for temperature compensation. The RTD shall be a 100 ohm, 4-wire platinum probe. Instrument accuracy shall be plus or minus 0.5 degrees F over the measured range.

2.10 NOZZLES, ADAPTERS AND COUPLERS

2.10.1 API Truck Couplers

The API truck couplers shall be a dry-break, bottom loading coupler, constructed to mate with API RP 1004 dry-break adapters. The couplers shall be constructed of lightweight aluminum with all wetted components constructed of stainless steel and anodized aluminum. Seals shall be of Viton. Coupler shall be rated for 200 psig in the closed position. Coupler shall be self-aligning with five cams locking the coupler in place when positioned on the API truck adapter with the poppet-opening handle engaged. Coupler shall include handles for positioning the coupler on the truck adapter.

2.11 Dry-Break Coupler

Coupler shall be compatible with the connecting adaptor. Coupler shall provide a positive, leakproof connection when under constant or surge fuel flow. Coupler shall prevent vapor emissions during fuel flow. Seals

within the coupler shall be Buna-N or Viton. Coupler shall have an internal, manually operated shutoff valve. The valve shall have an external operating handle with the valve's position (open or closed) clearly labeled. The internal valve shall not be capable of being manually opened unless the coupler is properly connected to its connecting adapter. After connecting coupler and adapter, opening of the coupler valve shall in turn open the poppet of the adjoining adapter to allow fuel flow.

2.12 Quick Disconnect Coupler

Coupler shall be the quick disconnect, cam type that conforms to CID A-A-59326. Provide coupler with a stainless steel dust plug and a stainless steel hanging eye.

2.13 FUEL SAMPLING CONNECTION

Sampling connection shall include a 1/4 inch stainless steel sampling probe, a 1/4 inch stainless steel ball valve, and a stainless steel quick disconnect coupling. Fit the end of the coupling with a compatible aluminum dust cap. Connect the dust cap to the sampling connection with a bronze chain.

2.14 FLOW SWITCH

Switch shall be the actuating vane type that has a single adjustable setpoint. Switch shall be mounted on ASME B16.5 Class 150 flanged end connection. Switch shall be provided with a snap action switch mechanism that is UL listed. Switch enclosure shall be weatherproof as well as explosion-proof in accordance with NFPA 70 for Class I, Division I, Group D locations. Switch to be double pole double throw (DPDT). Switch power shall be 120 volts, single phase, 60 hertz, and 10 amps minimum.

2.15 CONTROL STATIONS

Electrical supply and electrical control equipment shall be suitable for Class I, Division 1, Group D locations, be intrinsically safe, be weather resistant and be in accordance with UL 913, NEMA 250, and NFPA 70. Mounting hardware shall be corrosion resistant.

2.15.1 Pump Control System

System shall include all required hardware and software in an integrated system. System shall include the following parts as a minimum.

2.15.1.1 Pump Control Start/Stop Station

Station shall be an 18 gauge galvanized steel NEMA 250, Type 4X/7 enclosure. Station shall have with a start pushbutton, a stop pushbutton, and a red run indicating light. Mounting hardware shall be corrosion resistant. The start pushbutton shall be NO and momentary contact and the stop pushbutton shall be NC and momentary contact.

2.15.1.2 Pump Motor Starter Controls at MCC

Motor starter shall include run indication light for each pump. The motor starter shall include an HOA switch for each pump to allow for "hand" control of each pump or "auto" control where the microload controls the pump's operation. Refer to sequence of operations on mechanical design drawings for "hand" operation and "auto" operation at the truck fillstand.

2.15.2 Load Computers at Truck Fillstand and Additive Transfer System (Microloads)

The Microload load computers at the existing truck fillstand shall be re-used, quantity as indicated on design drawings.

Information from an existing Microload Load Computer:

Model No.: MLXP-STD-1

2.15.3 Tank Truck Ground Verification, Overfill Prevention and Deadman Control at Truck Fillstand

The SCULLY system at the existing truck fillstand shall be re-used, quantity as indicated on design drawings. Included in the system is deadman control, ground verification and overfill prevention.

Information from an existing Scully Intellitrol:

Model No.: IC-OGV

2.16 FLASH POINT MONITOR

Flash Point Monitor shall be microprocessor based monitor capable of automatic product flash point monitoring. The monitor shall be capable of remote and local monitoring and control. The system requires a maximum of 30 seconds to perform a flash point reading with a programmable delay between readings from 0 to 9999 seconds. Product flashpoint can be monitored with user programmable high and low alarm set points. The monitoring system shall have a proven history for determining the flash point of aviation fuel. Monitoring system shall have a 4-20 milliamp signal for API gravity input for potential use with a densitometer in the future. Monitoring system shall also have the capability of hard programming the API gravity into the unit's microprocessor and a 4-20 milliamp output signal for remote and local monitoring of the product flash point. Monitor to output and alarm on system malfunction. Flash Point Monitor shall be provided in an explosionproof enclosure. Flash Point Monitor shall be provided wireless (i.e. Bluetooth, Wifi, etc.) connectivity for local monitoring.

2.16.1 Product Recovery System

Provide recovery system consisting of a 15 gallon stainless steel tank, 4 level stainless steel float system, 2HP, 460V, 60 Hz, 3-phase, explosionproof motor, reduction gear box, triplex piston pump, and a programmable logic controller (PLC). Provide pump with 230 Micron "T" type inlet filtration. Recovery system shall have an alarm output to alert station personnel of an abnormal or malfunction condition and PLC protection to prevent tank overflow or pump/motor damage. The product recovery system shall be interlocked with the flash point monitoring system. The 15 gallon recovery tank shall be of 304 stainless steel, with a minimum wall thickness of 0.105 inches. The product recovery system shall come from the same manufacturer as the Flash Point Monitoring system and shall be mounted to the same standard rack. Product recovery system PLC and associated electrical equipment shall be provided in an explosionproof enclosure.

2.17 ADDITIVE INJECTION SYSTEM

The Government will provide the corrosion inhibitor/lubricity improver (CI/LI) and the static dissipater (SDA) required for testing the additive mixing tank and the additive injector. The Contractor shall notify the Contracting Officer a minimum of 90 days in advance of the requirements.

Additive injector shall be a self-contained unit with a positive displacement fluid motor driving two, positive displacement dual plunger pumps with heavy duty pump frames. The two additive injector pumps shall be plunger rated up to 285 psig. Injector shall be capable to continuously dispense the diluted (1:1) CI/LI additive at 10 - 58 ppm and the diluted (9:1) SDA additive at 10 - 58 ppm into Jet-A turbine fuel. Injection rates shall be adjustable. Injection operation shall be passive and strictly mechanical. Duty cycle shall be intermittent.

2.17.1 Materials of Construction

The fluid motor housing and rotor shall be carbon steel. The fluid motor shaft, the injection pump manifolding, and all wetted parts shall be stainless steel. Injection pump elastomers shall be Aflas.

2.17.2 Size and Orientation

Additive injector shall have 10-inch ASME B16.5, Class 150, raised faced end connections and shall have a product flow range of 2100 to 3200 gpm. Shall be installed such that the Injector shaft is in the horizontal.

2.17.3 Suction Calibration Gauge

Provide each injector pump with a suction calibration gauge to enable verification of the system operation and assist in calibration of the injector. Provide calibration gauge with Y-strainer with 60 mesh.

2.17.4 Static Dissipater Mixing/Storage Tank

Additive mixing/storage tank and mixers shall be in accordance with Section 33 56 10 FACTORY-FABRICATED FUEL STORAGE TANKS.

2.17.5 Corrosion Inhibitor Storage Tank

Additive storage tank shall be in accordance with Section 33 56 10 FACTORY-FABRICATED FUEL STORAGE TANKS.

2.17.6 Jet Fuel Breakout Storage Tank

Jet fuel breakout storage tank shall be in accordance with Section 33 56 10 FACTORY-FABRICATED FUEL STORAGE TANKS.

2.18 FINISHES

2.18.1 New Equipment and Components

2.18.1.1 Factory Coating

Unless otherwise specified, provide equipment and components fabricated from ferrous metal with the manufacturer's standard factory finish. Each factory finish shall be capable of withstanding 500 hours exposure to the salt spray test specified in ASTM B117. For test acceptance, the test

specimen shall show no signs of blistering, wrinkling, cracking, or loss of adhesion and no sign of rust creepage beyond 1/8 in on either side of the scratch mark immediately after completion of the test. For equipment and component surfaces subject to temperatures above 120 degrees F, the factory coating shall be appropriately designed for the temperature service.

2.18.1.2 Field Painting

Painting required for surfaces not otherwise specified shall be field painted as specified in Section 09 97 13.27 EXTERIOR COATING OF STEEL STRUCTURES. Do not paint stainless steel and aluminum surfaces. Do not coat equipment or components provided with a complete factory coating. Prior to any field painting, clean surfaces to remove dust, dirt, rust, oil, and grease.

PART 3 EXECUTION

3.1 INSTALLATION

Installation, workmanship, fabrication, assembly, erection, examination, inspection, and testing shall be in accordance with ASME B31.3 and NFPA 30, except as modified herein. Safety rules as specified in NFPA 30 and NFPA 407 shall be strictly observed. When work is not in progress, securely close open ends of pipe and fittings with expansion plugs so that water, earth, or other substances cannot enter the pipe or fittings.

3.1.1 Equipment

Properly level, align, and secure equipment in place in accordance with manufacturer's instructions. Provide supports for equipment, appurtenances, and pipe as required. Provide floor-mounted pumps with mechanical vibration isolators or a vibration isolation foundation. Install anchors, bolts, nuts, washers, and screws where required for securing the work in place. Sizes, types, and spacings of anchors and bolts not indicated or specified shall be as required for proper installation.

3.1.1.1 Pumps

Fuel system pumps shall conform to Section 33 52 43.23 PUMPS, FUEL SYSTEM.

3.1.1.2 Fuel Sampling Connection

Install the sampling probe to piping through a 1/4 inch threadolet. Install the open face of the probe in the center of the connecting pipe. Face the probe opening in the direction of the upstream fluid.

3.2 SYSTEM COMMISSIONING

System commissioning shall conform to Section 33 08 55 COMMISSIONING OF FUEL FACILITY SYSTEMS.

3.3 ADDITIVE INJECTION SYSTEM

The Contractor shall provide the Contracting Officer with written notice 90 days prior to the need for Jet A, the corrosion inhibitor (CI) and static dissipator (SDA) additives to test the additive injection system. The Contractor shall demonstrate the following features:

a. Manual start/stop of the static dissipator additive mixers.

b. Calibration of the additive injector for the two additives; CI and SDA and the resulting additized product.

3.4 FLASH POINT MONITORING SYSTEM

A manufacturer's field service representative shall be provided during installation, programming, and start-up/testing to verify the Flash Point Monitor and Recovery System is functioning properly. Coordinate the start-up and testing of the Flash Point System with the electrical and mechanical contractors.

3.5 MICROLOAD LOAD COMPUTERS

Qualified personnel with Microload programming experience shall be provided at no additional cost to the Government. This personnel shall provide programming assistance, technical assistance, and start-up/testing support of the Microload system. A manufacturer's field service representative shall also be provided during start-up to verify the Microload system is functioning properly. Coordinate the start-up and testing of the Microload systems with the electrical and mechanical contractors.

-- End of Section --

SECTION 33 57 00.10

MARINE LOADING ARMS TAKEDOWN, STORAGE AND REINSTALLATION
02/10

PART 1 GENERAL

This specification shall apply to all work related to marine loading arms, takedown, storage, and re-installation.

The Government will provide the services of a qualified and approved Marine Loading Arm Equipment Specialist, (MLAE Specialist), to supervise and advise the special procedures required to take down the existing Marine Loading Arm Equipment (MLAE) from DFSP Yorktown; provide recommendations and supervision for rigging and transportation to an approved special storage facility at DFSP Craney Island; special storage requirements during the construction period; onsite overhaul, check out and certification of MLAE prior to re-installation at DFSP Craney Island; and for transportation, rigging, and re-installation of all MLAE on the new piers.

Services of the MLAE Specialist will include supervision and recommendations for start up testing, check out procedures, certifications, including any and all requirements for final operations of the MLAE.

The MLAE Specialist will be on-site to support and supervise the following activities:

a. On-site walk thru at DFSP Yorktown.

b. Takedown of MLAE No. 2 and MLAE No. 4 at DFSP Yorktown, rigging and transportation to DFSP Craney Island for storage.

c. Check-out, onsite overhaul and certification of MLAE No. 2 and No. 4 prior to installation activities on Pier C and Pier D South at DFSP Craney.

d. Installation, startup and commissioning of MLA No. 2 on Pier C.

e. Installation, startup and commissioning MLA No. 4 on Pier D South.

f. Takedown of MLAE No. 3 at DFSP Yorktown, rigging and transportation to DFSP Craney for storage.

g. Checkout, onsite overhaul and certification of MLAE No. 3 prior to installation activities on Pier D North at DFSP Craney.

h. Installation, startup and commissioning of MLA No. 3 on Pier D North.

The MLAE shall be defined to include the marine loading arms, the associated hydraulics and hydraulic controls and panels, pumps and associated piping and valves, and electrical controls.

Comply with applicable requirements of the following specification Sections:

01 14 00 WORK RESTRICTIONS
01 35 26 GOVERNMENTAL SAFETY REQUIREMENTS
01 32 17.00 20 NETWORK ANALYSIS SCHEDULES

1.1 SUBMITTALS

Government approval is required for submittals with a "G" designation; submittals not having a "G" designation are for Contractor Quality Control approval. Submit the following in accordance with Section 01 33 00 SUBMITTAL PROCEDURES:

SD-01 Preconstruction Submittals

MLAE Work Plan; G

Work plan for procedures to takedown, transport, storage, and install of all related equipment, including schedules of proposed work. (To be included with requirements of Section 01 32 17.00 20 NETWORK ANALYSIS SCHEDULES.)

Crane Critical Lift Plan; G

SD-02 Shop Drawings

Detail Drawings; G

Rigging Drawings, including crane certifications, transportation procedures

Diagrams and instructions from MLAE Specialist

SD-05 Design Data

Crane rigging calculations and diagrams

SD-06 Test Reports

Crane Reports

Pre-Takedown and Pre-Installation Inspections Report; G

Field Tests Reports; G

Test reports in booklet form showing all field tests performed to adjust each component and all field tests performed to prove compliance with the specified performance criteria, within 14 days after the successful completion of testing the installed system.

Acceptance Testing; G

Loss of Power Test; G

Grounding Test; G

SD-07 Certificates

Certificate of Compliance (Crane)

SD-08 Manufacturer's Instructions

MLAE; G

Preprinted or custom printed material describing recommended

installation of all MLAE

SD-11 Closeout Submittals

Field Tests Reports; G

Grounding Test; G

Pressure Test Reports; G

1.2 QUALITY ASSURANCE

1.2.1 MLAE Specialist

Contractor shall perform work specified in the section under the direct guidance and approval of the MLAE Specialist who is engaged in the supervision of work required by this section of the specifications.

1.2.2 Pre-Takedown and Pre-Installation Inspections

Contractor is responsible for performance of quality control inspections. Submit Pre-Takedown and Pre-Installation Inspections Report for approval by Contracting Officer.

1.2.3 MLAE Work Plan

Work plan for procedures to takedown, transport, store, overhaul and re-installation of related equipment, including schedules of proposed work. (To be included with requirements of Section 01 32 17.00 20 NETWORK ANALYSIS SCHEDULES.)

1.3 SAFETY

1.3.1 Crane Critical Lift Plan

Provide Crane Critical Lift Plan as required in Section 01 35 26 GOVERNMENT SAFETY REQUIREMENTS.

1.4 REPORTS

1.4.1 Crane Reports

Provide Crane Reports as required in Section 01 35 26 GOVERNMENT SAFETY REQUIREMENTS.

1.4.2 Certificate of Compliance

Provide Certificate of Compliance as required in Section 01 35 26 GOVERNMENT SAFETY REQUIREMENTS.

PART 2 PRODUCTS

2.1 DETAIL DRAWINGS

Submit detail drawings, including dimensioned layouts in plan and elevation including rigging drawings, transportation tie-down requirements and storage blocking requirements.

Provide special instructions for long-term storage and packing requirements.

Provide diagrams and instructions.

Submit all documents to Contracting Officer for approval.

PART 3 EXECUTION

3.1 EXAMINATION

After becoming familiar with all details of the work, and before performing any work, Contractor shall verify all dimensions in the field, and submit a letter describing the results of this verification, including discrepancies, to the Contracting Officer.

3.2 INSTALLATION

Perform the entire MLAE installation in accordance with MLAE specialists instructions under the supervision of the MLAE specialist.

Provide a written certificate from MLAE Specialist indicating the MLAE is erected in accordance with MLAE Specialist's recommendations before testing the completed installation.

3.3 ADVANCE NOTICE

Provide Contracting Officer with 30 days written notice before takedown and before reinstallation of each MLAE.

3.4 FIELD QUALITY CONTROL

3.4.1 Testing Materials and Instruments

Provide testing materials and instruments required for final inspection.

3.4.2 Field Tests

Submit Field Tests Reports after completing each of the specified tests, as required in the Submittals paragraph.

3.4.2.1 Hydraulic Pressure Tests

Check all hydraulic operating pressures under no load conditions and under standard operating load conditions.

3.4.2.2 Mechanical Alignment

Align all elements of operating equipment, motors, couplings, and drive components when reinstalled in accordance with MLAE Specialist's instructions.

3.5 ACCEPTANCE TESTING

3.5.1 General

Provide all personnel necessary to conduct the required testing, including but not limited to, crane operators, riggers, and tradesmen.

Perform testing in the presence of Contracting Officer.

A representative of the Contractor responsible for installing MLAE shall be present along with MLAE Specialist to direct the field testing.

Furnish three copies of all test reports to Contracting Officer.

3.5.2 Test Data

Record operating and startup measurements for all operating components.

Compare recorded values with manufacturer's specifications or Manufacturer's recommended values.

Justify abnormal differences in the remarks and perform appropriate adjustments.

Note any abnormal operation of any equipment or machinery, investigate and correct.

3.5.3 Grounding Test

Test MLAE to determine that the MLAE and all related components are properly grounded during all phases of operation.

3.5.4 Adjustments and Repairs

Perform adjustments and repairs under the direction of the MLAE Specialist at no additional cost to the Government, until satisfactory conditions are maintained, and contract compliance is affected.

3.5.5 Pressure Test

Pressure test the MLAE as directed by the MLAE Specialist. Submit Pressure Test Reports for approval by Contracting Officer.

3.5.6 Loss of Power Test

Perform a loss of power test for each Marine Loading Arm as directed by the MLAE Specialist.

3.6 FINAL ACCEPTANCE

Final acceptance of MLAE system will not be given until Contractor and MLAE Specialist have successfully completed all testing operations, corrected all material and equipment defects, and made all proper operation adjustments.

-- End of Section --

SECTION 33 57 00.20

NEW MARINE LOADING ARMS
02/10

PART 1 GENERAL

This specification shall apply to all work related to the purchase of three new marine loading arms, storage and installation. Work in this section is part of Bid Option A-2.

The Government will provide the services of a qualified and approved Marine Loading Arm Equipment (MLAE) Specialist,(MLAE Specialist), to supervise and advise the special procedures required for transportation, rigging and installation of the MLAE on the piers at DFSP Craney Island.

Services of the MLAE Specialist will include supervision and recommendations for start up testing, check out procedures, certifications, including any and all requirements for final operations of the MLAE.

The MLAE Specialist will be on-site to support and supervise the following activities:

a. On-site walk thru at DFSP Craney for Pier C, Pier D South and Pier D North prior to MLAE installation. Three separate visits will be required to coincide with construction activities.

b. Installation, startup and commissioning of MLA No. 1 on Pier C.

c. Installation, startup and commissioning MLA No. 2 on Pier D South.

d. Installation, startup and commissioning of MLA No. 3 on Pier D North.

The MLAE shall be defined to include the marine loading arms, the associated hydraulics and hydraulic controls and panels, pumps and associated piping and valves, and electrical controls to provide a complete and operational system.

1.1 REFERENCES

The publications listed below form a part of this specification to the extent referenced. The publications are referred to in the text by basic designation only.

ASME INTERNATIONAL (ASME)

ASME B16.5	(2013) Pipe Flanges and Flanged Fittings: NPS 1/2 Through NPS 24 Metric/Inch Standard

OIL COMPANIES AND INTERNATIONAL MARINE FORUM (OCIMF)

Design and Construction	Design and Construction Specification for Marine Loading Arms

1.2 ADMINISTRATIVE REQUIREMENTS

As part of approved Additive Bid Option A-2, provide three (3) new marine

loading arm equipment (MLAE) approved by the Navy. Submit scaled assembly drawings identifying components and showing dimensions and tolerances. Complete technical literature shall be submitted on specific function equipment. OMSI information shall be submitted for the equipment items or systems specified. Refer to Section 01 78 23 OPERATION AND MAINTENANCE DATA for the information to be submitted for various types of equipment and systems.

Comply with applicable requirements of the following specification Sections:

01 14 00 WORK RESTRICTIONS
01 35 26 GOVERNMENTAL SAFETY REQUIREMENTS
01 32 17.00 20 NETWORK ANALYSIS SCHEDULES

1.3 SUBMITTALS

Government approval is required for submittals with a "G" designation; submittals not having a "G" designation are for Contractor Quality Control approval. Submit the following in accordance with Section 01 33 00 SUBMITTAL PROCEDURES:

SD-01 Preconstruction Submittals

MLAE Work Plan; G

Work plan for procedures to takedown, transport, store, and re-install all related equipment, including schedules of proposed work. (To be included with requirements of Section 01 32 17.00 20 NETWORK ANALYSIS SCHEDULES.)

Crane Critical Lift Plan; G

SD-02 Shop Drawings

Marine Loading Arm (MLAE); G

Rigging Drawings, including crane certifications, transportation procedures

Diagrams and instructions from MLAE Specialist

SD-05 Design Data

Crane rigging calculations and diagrams

SD-06 Test Reports

Crane Reports

Pre-Installation Inspection Report; G

Field Tests Reports; G

Test reports in booklet form showing all field tests performed to adjust each component and all field tests performed to prove compliance with the specified performance criteria, within 14 days after the successful completion of testing the installed system.

Acceptance Testing; G

Loss of Power Test; G

Grounding Test; G

SD-07 Certificates

Certificate of Compliance (Crane)

SD-08 Manufacturer's Instructions

MLAE; G

Preprinted or custom printed material describing recommended installation of all MLAE

SD-10 Operation and Maintenance Data

MLAE; Data Package 4

SD-11 Closeout Submittals

Field Tests Reports; G

Grounding Test; G

Pressure Test Reports; G

1.4 QUALITY ASSURANCE

1.4.1 MLAE Specialist

Contractor shall perform work specified in the section under the direct guidance and approval of the MLAE Specialist who is engaged in the supervision of work required by this section of the specifications.

1.4.2 MLAE Work Plan

Work plan for procedures to install all related equipment, including schedules of proposed work. (To be included with requirements of Section 01 32 17.00 20 NETWORK ANALYSIS SCHEDULES.)

1.5 SAFETY

1.5.1 Crane Critical Lift Plan

Provide Crane Critical Lift Plan as required in Section 01 35 26 GOVERNMENT SAFETY REQUIREMENTS.

1.6 REPORTS

1.6.1 Crane Reports

Provide Crane Reports as required in Section 01 35 26 GOVERNMENT SAFETY REQUIREMENTS.

1.6.2 Pre-Installation Inspection Report

Contractor shall perform on-site walk thru prior to MLAE installation and

shall provide report to Contracting Officer that site conditions are ready for MLAE installation.

1.6.3 Certificate of Compliance

Provide Certificate of Compliance as required in Section 01 35 26 GOVERNMENT SAFETY REQUIREMENTS.

PART 2 PRODUCTS

2.1 GENERAL

The marine loading arm shall meet the requirements of this specification and the specification "Design and Construction Specification for Marine Loading Arms" by Oil Companies and International Marine Forum (OCIMF), Third Edition 1999.

Marine loading arms shall be hydraulically operated fully balanced with independent counterweights; self supporting pantograph design.

Components shall be ASME B16.5 Class 150 (275 psig at 100 degrees F, except that swivel joints and pressure fueling nozzles shall be 125 psig at 100 degrees F).

Marine loading arm operating envelope shall match as a minimum the operating envelope of the existing MLAE currently installed at Pier C and Pier D Craney Island:

a. Pier C Marine Load Arm

1. Maximum True Reach - 56 feet - 10 inches (Nom.)

2. Primary Arm: 36 feet - 0 inches

3. Secondary Arm: 38 feet - 0 inches

4. Fulcrum Height: 22 feet - 0 inches

5. Ship End Connection: 8 inches, 150 pounds ANSI Coupler

6. Inlet Flange Connection - 8 inches, 150 pounds

b. Pier D South Marine Load Arm:

1. Maximum True Reach - 54 feet - 0 inches.

2. Primary Arm: 32 feet - 0 inches

3. Secondary Arm: 34 feet - 0 inches

4. Fulcrum Height: 22 feet - 0 inches

5. Ship End Connection: 8 inches, 150 pounds ANSI Coupler

6. Inlet Flange Connection - 8 inches, 150 pounds

c. Pier D North Marine Load Arm:

1. Maximum True Reach - 54 feet - 0 inches.

2. Primary Arm: 32 feet - 0 inches

3. Secondary Arm: 34 feet - 0 inches

4. Fulcrum Height: 22 feet - 0 inches

5. Ship End Connection: 8 inches, 150 pounds ANSI Coupler

6. Inlet Flange Connection - 8 inches, 150 pounds

d. MLAE Designed to Meet Maximum Wind Speeds:

1. Parked Position: 120 mph

2. Operating Position: 60 mph

3. Service Position: 30 mph

2.2 MARINE LOADING ARM (MLAE)

2.2.1 Fuel Piping Components

Fuel piping components shall be constructed of carbon steel.

2.2.2 Hydraulic and Lubrication Components

Hydraulic and lubrication components shall be constructed from stainless steel.

2.2.3 Manual Coupler

All seals shall be Buna-N compatible with jet fuel.

Quick connect/disconnect coupler shall be manually operated. Unit shall consist of three or more clamps to secure to the ship's assembly. The clamps shall extend quickly to secure connection. An O-ring fitted to coupling flange shall ensure positive sealing. Quick connect shall couple to metric, ANSI and BS flanges.

2.2.4 Swivel Joints

Swivel joints shall incorporate 4-point contact ball races to ensure smooth operation. The swivel seal shall be replaceable without removing balls. Unit shall have long life lubrication. Unit shall have a stainless-steel packing face. Provide flanged fittings on each swivel joint.

2.2.5 Drain Ports

Provide 2-inch drain ports.

2.2.6 Vacuum Breaker

Provide a vacuum breaker to allow air to enter arm to completely drain the product from the arm. Provide a manually-operated spring return valve and check valve at vacuum breaker.

2.2.7 Ladders and Platforms

Provide ladders that shall allow maintenance of the arm.

2.2.8 Electrical Insulating, Electrical Continuity and Earthing

Provide electrical insulating (10,000 ohms), electrical continuity along the arm, and earthing lug at riser.

2.2.9 Tie-Down Device

Provide tie-down device in rest position controlled manually from dock level.

2.3 ELECTRIC, HYDRAULIC AND REMOTE CONTROL

2.3.1 Electrical Components and Motors

All electrical components and motors shall be explosionproof Class 1 Division 2 Group D.

2.3.2 PLC Controller

MLAE shall be compatible with existing PLC controller located on each pier.

2.3.3 Selector Valve Assembly System and Panel

MLAE furnished shall be compatible with existing selector valve assembly and panel located on each pier.

2.3.4 Hydraulic Power Units

Existing hydraulic power units shall be utilized to operate furnished MLAE.

2.3.5 Local Control

Provide local control plug connection for MLAE.

2.4 PAINTING

Provide 3 coats of paint: Primer (75 microns), intermediate (150 microns) and top coat (60 microns) for a total thickness of 285 microns.

a. Primer: Zinc rich primer epoxy polyamide.

b. Intermediate: High build, modified amine epoxy paint.

c. Top: Polyurethane.

PART 3 EXECUTION

3.1 EXAMINATION

After becoming familiar with all details of the work, and before performing any work, Contractor shall verify all dimensions in the field, and submit a letter describing the results of this verification, including discrepancies, to the Contracting Officer.

3.2 INSTALLATION

Perform the entire MLAE installation in accordance with MLAE specialists instructions under the supervision of the MLAE specialist.

Provide a written certificate from MLAE Specialist indicating the MLAE is erected in accordance with MLAE Specialist's recommendations before testing the completed installation.

3.3 ADVANCE NOTICE

Provide Contracting Officer with 30 days written notice before reinstallation of each MLAE.

3.4 FIELD QUALITY CONTROL

3.4.1 Testing Materials and Instruments

Provide testing materials and instruments required for final inspection.

3.4.2 Field Tests

Submit Field Tests Reports after completing each of the specified tests, as required in the Submittals paragraph.

3.4.2.1 Hydraulic Pressure Tests

Check all hydraulic operating pressures under no load conditions and under standard operating load conditions.

3.4.2.2 Mechanical Alignment

Align all elements of operating equipment, motors, couplings, and drive components when reinstalled in accordance with MLAE Specialist's instructions.

3.5 ACCEPTANCE TESTING

3.5.1 General

Provide all personnel necessary to conduct the required testing, including but not limited to, crane operators, riggers, and tradesmen.

Perform testing in the presence of Contracting Officer.

A representative of the Contractor responsible for installing MLAE shall be present along with MLAE Specialist to direct the field testing.

Furnish three copies of all test reports to Contracting Officer.

3.5.2 Test Data

Record operating and startup measurements for all operating components.

Compare recorded values with manufacturer's specifications or Manufacturer's recommended values.

Justify abnormal differences in the remarks and perform appropriate adjustments.

Note any abnormal operation of any equipment or machinery, investigate and correct.

3.5.3 Grounding Test

Test MLAE to determine that the MLAE and all related components are properly grounded during all phases of operation.

3.5.4 Adjustments and Repairs

Perform adjustments and repairs under the direction of the MLAE Specialist at no additional cost to the Government, until satisfactory conditions are maintained, and contract compliance is affected.

3.5.5 Pressure Test

Pressure test the MLAE as directed by the MLAE Specialist. Submit Pressure Test Reports for approval by Contracting Officer.

3.5.6 Loss of Power Test

Perform a loss of power test for each Marine Loading Arm as directed by the MLAE Specialist.

3.6 FINAL ACCEPTANCE

Final acceptance of MLAE system will not be given until Contractor and MLAE Specialist have successfully completed all testing operations, corrected all material and equipment defects, and made all proper operation adjustments.

-- End of Section --

SECTION 33 65 00

CLEANING PETROLEUM STORAGE TANKS
08/11

PART 1 GENERAL

1.1 REFERENCES

The publications listed below form a part of this specification to the extent referenced. The publications are referred to within the text by the basic designation only.

AMERICAN PETROLEUM INSTITUTE (API)

API RP 2003	(2008; 7th Ed) Protection Against Ignitions Arising out of Static, Lightning, and Stray Currents
API RP 500	(2012) Classification of Locations for Electrical Installations at Petroleum Facilities Classified as Class I, Division and Division 2
API Std 2015	(2001; R 2006) Safe Entry and Cleaning of Petroleum Storage Tanks

NATIONAL FIRE PROTECTION ASSOCIATION (NFPA)

NFPA 306	(2014) Standard for Control of Gas Hazards on Vessels
NFPA 70	(2014; AMD 1 2013; Errata 2013; AMD 2 2013) National Electrical Code

NATIONAL INSTITUTE FOR OCCUPATIONAL SAFETY AND HEALTH (NIOSH)

NIOSH 99-109	(Latest) Certified Equipment List

U.S. ARMY CORPS OF ENGINEERS (USACE)

EM 385-1-1	(2008; Errata 1-2010; Changes 1-3 2010; Changes 4-6 2011; Change 7 2012) Safety and Health Requirements Manual

U.S. DEPARTMENT OF DEFENSE (DOD)

MIL-PRF-680	(2010; Rev C) Degreasing Solvent

U.S. GENERAL SERVICES ADMINISTRATION (GSA)

FS O-D-1276	(Rev B; Notice 1) Disinfectant-Detergent, General Purpose (Pine Oil)

U.S. NATIONAL ARCHIVES AND RECORDS ADMINISTRATION (NARA)

29 CFR 1910.1025	Lead

29 CFR 1910.1028	Benzene
29 CFR 1910.120	Hazardous Waste Operations and Emergency Response
29 CFR 1910.1200	Hazard Communication
29 CFR 1910.134	Respiratory Protection
29 CFR 1910.146	Permit-required Confined Spaces
40 CFR 260	Hazardous Waste Management System: General
40 CFR 261	Identification and Listing of Hazardous Waste
40 CFR 262	Standards Applicable to Generators of Hazardous Waste
40 CFR 263	Standards Applicable to Transporters of Hazardous Waste
40 CFR 264	Standards for Owners and Operators of Hazardous Waste Treatment, Storage, and Disposal Facilities
40 CFR 265	Interim Status Standards for Owners and Operators of Hazardous Waste Treatment, Storage, and Disposal Facilities
40 CFR 266	Standards for the Management of Specific Hazardous Wastes and Specific Types of Hazardous Waste Management Facilities

UNDERWRITERS LABORATORIES (UL)

UL 844	(2012) Standard for Luminaires for Use in Hazardous (Classified) Locations

1.2 SUBMITTALS

Government approval is required for submittals with a "G" designation; submittals not having a "G" designation are for Contractor Quality Control approval. The following shall be submitted in accordance with Section 01 33 00 SUBMITTAL PROCEDURES:

SD-03 Product Data

Cleaning agents

Gasoline-oil-resisting rubber gloves and boots

Cotton coveralls and hard hat

Respiratory protective equipment

Disinfectant

Submit identification for the items by designated name,

specification number, project contracting number, and intended use.

SD-06 Test Reports

Monitoring Results; G

SD-07 Certificates

Qualifications of Marine Chemist

Qualifications of Certified Industrial Hygienist (CIH)

Testing laboratory

Safety plan

Work plan

Tank certification of safety

Training certification

Respiratory protective equipment

Breathing-air supply source

Combustible gas indicator

Hydrogen-sulfide (H2S) indicator

Benzene indicator

Oxygen meter

Velometers

Lighting

First aid kit

Tank exhaust blower

Submit certificates for the items listed. Where equipment or materials are specified to conform with the standards of organizations, such as National Institute for Occupational Safety and Health (NIOSH), Underwriters Laboratories (UL), and American Petroleum Institute (API), include a label or listing indicating compliance. In lieu of the label or listing, the Contractor may submit a test report from an approved testing organization stating that the item has been tested in accordance with the specified organization's test methods and that the item conforms with the organization's standard or code.

SD-08 Manufacturer's Instructions

Tank cleaning agents

Submit material safety data sheets for materials to be used at the job site, in accordance with 29 CFR 1910.1200.

SD-11 Closeout Submittals

Safety permits

Submit copies of permits required to comply with local, State, and Federal regulations.

1.3 DEFINITIONS

1.3.1 Certified Industrial Hygienist (CIH)

As used in this section, refers to an Industrial Hygienist employed by the Contractor and is certified by the American Board of Industrial Hygiene in comprehensive practice.

1.3.2 Marine Chemist

The holder of a valid Certificate issued by the National Fire Protection Association in accordance with the "Rules for Certification of Marine Chemists," establishing him as a person qualified to determine whether construction, alteration, repair, or shipbreaking of vessels, which may involve hazards covered by NFPA 306 can be undertaken with safety.

1.3.3 Hazardous Areas

Hazardous areas shall be defined as any area within 100 feet of active aboveground storage tanks, areas within 100 feet of leaking sections of fuel pipelines or other vapor sources, areas within 200 feet of the downwind side of potential vapor emission sources (i.e., pressure-vacuum vents or open vents on active tanks, leaking sections of pipelines), areas within existing tanks, and areas within a dike.

1.3.4 Hot Work Operations

Hot work, for work covered by this section, includes: flame heating, welding, torch cutting, brazing, carbon arc gouging, or any work which produces heat, by any means, of 400 degrees F or more; or in the presence of flammables or flammable atmospheres, other ignition sources such as spark or arc producing tools (except steel hand tools) or equipment, static discharges, friction, impact, open flames or embers, nonexplosion-proof lights, fixtures, motors or equipment.

1.3.5 Personal Monitoring

Sampling of lead concentrations within the breathing zone of an employee to determine the 8-hour time weighted average concentration in accordance with 29 CFR 1910.1025. Samples shall be representative of the employee's work tasks. Breathing zone shall be considered an area within a hemisphere, forward of the shoulders, with a radius of 6 to 9 inches and the center at the nose or mouth of an employee.

1.3.6 Reproductive Hazard

A reproductive hazard is defined as any occupational stressor (biological, chemical, or physical) that has the potential to adversely affect the human reproductive process. For example, it is well known that central nervous system problems often occur in the offspring of mothers exposed to organic mercury during pregnancy. Therefore, based on the example cited, organic

mercury can be classified as a reproductive stressor. Many reproductive hazards also cause other adverse health effects; for example, ethylene oxide is also known to be a carcinogen (i.e., produces cancer). Certain reproductive stressors can also have adverse effects on the male reproductive system. (If requested by the Contractor, the Contracting Officer will make available the Navy's standard on reproductive hazards.)

1.4 QUALITY ASSURANCE

1.4.1 Modification of References

Except as modified herein, the work shall conform with the recommendations of API RP 500 and API RP 2003 and API Std 2015. Where the word "should" appears in these publications, substitute "shall."

1.4.2 Copies of Standards

Furnish four copies of API RP 500 AND API RP 2003 and API Std 2015.

1.4.3 Safety Permits and Equipment

Acquire safety permits (specified by the facility safety authorities) and necessary safety equipment.

1.4.4 Regulatory Requirements

a. Obtain permits required to comply with local, State, and Federal regulations.

b. Hazardous wastes, such as water, sediment, and sludge, shall be packaged, labeled, stored, transported, treated and disposed of in accordance with 40 CFR 260 through 40 CFR 266 and State and local regulations. Transporters, sorters, treaters and disposers must be certified and have EPA ID numbers. Payment for disposal of hazardous waste will not be made until a completed hazardous waste manifest from the treatment or disposal facility is returned, and a copy furnished to the Government.

1.4.5 CIH Responsibilities

a. Certify training.

b. Review and approve safety plans and work plan for conformance to the applicable referenced standards.

c. Inspect tank cleaning work for conformance with the approved safety and work plans.

d. Direct monitoring.

e. Ensure work is performed in strict accordance with specifications at all times.

f. Ensure hazardous exposure to personnel and to the environment are adequately controlled at all times.

1.4.6 Training

Train each employee performing tank cleaning, waste disposal, and air

sampling operations prior to the time of initial job assignment, in accordance with API Std 2015, 29 CFR 1910.120, 29 CFR 1910.134, and 29 CFR 1910.1200. The training shall also include counseling of each employee on reproductive hazards involved in the work.

1.4.7 Pre-Construction Conference

Along with the CIH, marine chemist, or gas-free engineer, meet with the Contracting Officer to discuss in detail the tank cleaning work plan, including work procedures and precautions for the work plan.

1.4.8 Certificates

1.4.8.1 Qualifications of Marine Chemist

Submit name, address, and telephone number of the marine chemist selected to perform the required duties. Submit documentation that the marine chemist is certified by the National Fire Protection Association, including the certificate number and date of certification or recertification. The NFPA certification will be acceptable for non-ship work on this contract.

1.4.8.2 Qualifications of Certified Industrial Hygienist (CIH)

Submit name, address, and telephone number of the CIH selected to perform responsibilities in paragraph entitled "CIH Responsibilities." Provide previous experience of the CIH. Submit proper documentation that the Industrial Hygienist is certified by the American Board of Industrial Hygiene in comprehensive practice, including certification number and date of certification/recertification. The CIH shall be familiar with the hazards involved in fuel systems work.

1.4.8.3 Testing Laboratory

Submit the name, address, and telephone number of the testing laboratory selected to perform the monitoring, testing, and reporting of airborne concentrations of lead and other contaminants. Provide proper documentation that persons performing the analysis have been judged proficient by successful participation within the last year in the National Institute for Occupational Safety and Health (NIOSH) Proficiency Analytical Testing (PAT) Program. The laboratory shall be accredited by the American Industrial Hygiene Association (AIHA). Provide AIHA documentation along with date of accreditation/reaccreditation.

1.4.8.4 Safety Plan

Submit a safety plan within 45 calendar days after contract award and 30 days prior to commencing work. The safety plan shall meet OSHA requirements and address the following:

a. Identification and evaluation of the hazards and risks associated with each site being studied, including reproductive hazards and precautionary measures to be followed by workers for all hazards.

b. Names and qualifications of each Contractor's representative in charge of the work and present at the job site when tank cleaning and repair work will be performed.

c. Identification of supervisory personnel and alternates responsible for site safety/response operations.

d. Determination of levels of personal protection to be worn for various site operations.

e. List of equipment with adequate nomenclature by item, that will be used at the job site and the date and location where this equipment can be inspected by the Contracting Officer.

f. Establishment of work zones (exclusion area, contamination area, and support area).

g. Establishment of a tank entry and work permit program in accordance with 29 CFR 1910.146 and EM 385-1-1.

h. Establishment of decontamination methods and procedures.

i. Determination of the number of people required to enter the contamination zones during the initial entries and subsequent operations.

j. Establishment of emergency procedures, such as: escape routes, fire protection, signals for withdrawing work parties from site, emergency communications, wind indicators, including Navy notification.

k. Identification and arrangements with nearest medical facility for emergency medical care for both routine-type injuries and toxicological problems. Submit name, location, and telephone number of this medical facility.

l. Establishment of continual air and personnel monitoring procedures.

m. Establishment of procedures for obtaining and handling potentially contaminated samples.

n. Identification of medical monitoring program, including respirator medical qualification examination for each individual at the work site.

o. Identification of training plan to be instituted, including contents of 29 CFR 1910.1200 and 29 CFR 1910.134; its training contents; and instructor with appropriate training certification. Training plan shall also include counseling to each employee on reproductive hazards.

p. Establishment of a respiratory protection program conforming to 29 CFR 1910.134.

q. Establishment of a hazard communication program (29 CFR 1910.1200).

1.4.8.5 Work Plan

The shut down or interruption to normal operations or traffic shall be listed on the progress schedule and submitted to the Contracting Officer.

1.4.8.6 Tank Certification of Safety

Submit certification, from an NFPA certified "Marine Chemist" or CIH stating that tank is safe for hot work and that special precautionary measures have been taken for workers to enter the tank to perform the work.

1.4.8.7 Training Certification

Submit certifications signed and dated by the CIH specified in the testing plan and by each employee stating that the employee has received training on work practices and received counseling on and fully understands the reproductive hazards involved with toulene exposure and the work.

1.4.8.8 Non-Hazardous Waste Permits

Submit local permits for disposal site for non-hazardous residues and wastes.

1.4.9 Air Monitoring

Submit monitoring results to the Contracting Officer within 2 working days after the samples are taken, signed by the testing laboratory employee performing the air monitoring, the employee that analyzed the sample, and the CIH.

1.5 DELIVERY AND STORAGE

Deliver equipment and materials to the site in an undamaged condition bearing the manufacturer's name and brand designation. Store equipment and materials off the ground to provide proper ventilation, drainage, and protection against dampness. Replace defective and damaged equipment and materials.

1.6 JOB CONDITIONS

1.6.1 Ventilation

Maintain a vapor-free condition throughout the course of the work inside the tank. The air movers shall be non-sparking, explosion-proof, electrically operated or air-driven exhaust type. A rate of one air change per hour shall be the lowest acceptable rate, for tanks under 30,000 BBL. For tanks greater than 30,000 BBL, use 10,000 cfm. Air movers shall be kept in operation whenever workers are in the tanks; except the air movers shall be shut down 15 minutes before taking tests.

1.7 SCHEDULING AND SEQUENCING

1.7.1 Sequence of Primary Phases of the Cleaning Procedure

a. Planning the operations

b. Preparation for cleaning

c. Vapor-freeing of the tank

d. Cleaning the tank

e. Clean-up, residue disposal, inspection, and acceptance.

1.7.2 General Scheduling

Complete the work specified in this section before any other work in the tank is started. The work includes the complete interior cleaning of the storage tanks.

PART 2 PRODUCTS

2.1 MATERIALS

2.1.1 Cleaning Agents

a. Detergent: FS O-D-1276.

b. Solvent: MIL-PRF-680, Type II, minimum flashpoint of 60 degrees C.

c. Approved commercial cleaning agent.

2.2 EQUIPMENT

Furnish necessary clothing and equipment for the work and protection of people entering the tank. Electrical equipment and wiring shall be in accordance with NFPA 70, Class 1, Group D, Division 1. Provide any item or items for the protection of these people including but not limited to the following:

a. Gasoline-Oil-Resisting Rubber Gloves and Boots: Gauntlet type and conductive type respectively (acid-proof rubber is an acceptable material); furnished for each person entering or working inside the tank or handling sludge materials on the exterior of the tank, plus one extra pair each for emergency use.

b. Cotton Coveralls and Hard Hat: Light colored; one change per person per day, and an adequate supply of chemical-resistant disposable coveralls to be worn over cotton coveralls.

c. Respiratory Protection: Provide one of the following types of NIOSH-approved respiratory protective equipment for each person working inside the tank, plus one extra for emergency use. NIOSH 99-109 listing constitutes NIOSH approval.

   1. Self-contained breathing apparatus with a full facepiece operated in a positive pressure mode.

   2. A combination respirator which includes a Type C supplied-air respirator which a full facepiece operated in a positive pressure mode and an auxiliary positive pressure self-contained breathing apparatus.

   3. The CIH may specify airline (Type C) respirator in place of those specified above; however, the decision shall be based on the results of personal monitoring.

   4. CIH shall specify respiratory protection if required for personnel handling sludge material outside of the tank.

d. Safety Harness: For each person working inside tank, plus one extra for outside the tank.

e. One half Inch Diameter Life Rope of Required Length: For each person working inside the tank.

f. Breathing-Air Supply Source: 29 CFR 1910.134.

g. Combustible Gas Indicator, Hydrogen-Sulfide (H_2S) Indicator, Benzene

Indicator and Oxygen Meter. Recommend a portable gas chromatograph or other more accurate instrument for the benzene indicator.

h. Shovels, Buckets, Brooms, Wrenches, Scrapers, Squeegees, Wire Brushes, Scrub-Brushes, Ladders, Staging, and Other Tools: Do not use brooms or brushes that have plastic or synthetic bristles.

i. Lighting: UL 844, explosion-proof, minimum 50 footcandle, floodlight type, or Mining Enforcement and Safety Administration (MESA) approved, explosion-proof, portable battery-powered light.

j. Air Movers for Tank Ventilation: Explosion proof electrically operated or air driven. Nonferrous fan blades. Use velometers for measuring velocity.

k. Disinfectant for Cleaning Face Masks: Cleaner-sanitizer for cleaning and disinfecting respirator facepieces as specified in 29 CFR 1910.134, Appendix B-2.

l. Soap for Personnel Washing: Non-phosphate type.

m. A.B.C. Fire Extinguishers: UL listed 2A: 40B: C, 2A: 20B: C, or 4A: 30B: C; minimum 15 pound capacity.

n. First Aid Kit: One 16-unit kit for each 25 persons.

PART 3 EXECUTION

3.1 PROJECT CONDITIONS

3.1.1 Permission for Each Entry Into a Tank

Obtain written permission from the Contracting Officer prior to each entry into a tank. Permission will be granted only under the following conditions:

a. The Contractor's qualified supervisor is present.

b. The Contractor's personnel have been briefed by the supervisor on the procedure and role of each employee in the event of an emergency.

c. Required equipment is approved and properly located.

d. Personnel are properly equipped with properly fitted protective equipment and have received adequate training from a qualified instructor.

e. The entire area adjacent to the tank is secured.

f. A minimum of two persons outside and two or more persons inside of each tank are provided at all times during cleaning operations.

g. Tank air is monitored and corrective action is taken to ensure that the vapor concentration is less than 10 percent of the lower flammable limit (LFL), hydrogen sulfide is less than 10 ppm permissible exposure level (PEL), benzene is less than one ppm PEL and oxygen content is a minimum of 19.5 percent.

h. An NFPA certified "Marine Chemist" or CIH has certified that the tank

is safe for hot work, and that the required special precautionary measures have been taken due to the potential health hazard to the worker that still exists, even when the vapor concentration is well below the LFL. The Contractor shall be responsible for reviewing the record drawing(s) of the tank to be cleaned.

i. People entering the area leave smoking materials such as cigarettes and flame-producing devices at a previously determined location.

j. Permit only personnel authorized in the safety plan within 100 feet of the tank perimeter.

3.1.2 Traffic Control

Direct traffic minimum 200 feet away from the tank cleaning area. Set up road blocks and warning signs. Do not operate vehicles in hazardous areas.

3.1.3 Lavatory Facilities

Arrange for lavatory and toilet facilities.

3.1.4 Miscellaneous

Ensure that the manufacturers have labeled containers holding products involving hazards in use or storage, in accordance with 29 CFR 1910.1200. Remove small objects of ferrous metal within the working areas to prevent the accidental striking of a spark. Place equipment upwind of tank openings at highest elevation possible; do not place in a spot lower than the surrounding terrain. Review drawings of the tank to be cleaned and brief workers on the location of pits, sumps, piping, or other tank appurtenances which could be hazardous to personnel. Provide floodlights to illuminate the work area without the need for battery operated handlights. Provide scaffolding, platforms, and ladders for secure, safe accessibility to tank surfaces. Install electrical equipment in accordance with API RP 500. Provide floodlights to illuminate the work area without the need for battery operated handlights. Do not use artificial lights inside tank until the tank is vapor-free.

3.1.4.1 Grounding and Bonding for Equipment

Provide grounding and bonding for equipment which may generate static electricity. Do not pass the air hose through an area where flammable vapors may exist.

3.1.4.2 Fire Extinguishers

Furnish two carbon-dioxide fire extinguishers of minimum 15 pounds capacity each, in the immediate vicinity of the work. Provide a continuous fire watch. CAUTION: Do not discharge high pressure carbon dioxide extinguishers where explosive vapors exist since the discharge can cause a spark which will ignite the vapors.

3.1.4.3 Disconnection Pipelines

Disconnect pipelines connected to the tank. Insert a solid-plate blind flange between two flanges near the tank, or remove a valve or piece of pipe and install a blind flange to prevent flammable material from entering the tank. Blind flanges shall be of sufficient strength to withstand pressure which might be exerted by the material being blanked off, and

shall be gasketed on both sides if blind flange is inserted between two flanges. CAUTION: Do not disconnect piping or valves until it is certain the line has been emptied of fuel.

3.1.4.4 Removal of Ignition Sources

Remove sources of ignition from the cleaning area. Do not permit ignition producing devices, including matches, lighters or cigarettes, within 100 feet upwind and 200 feet downwind of a tank, or inside the tank farm, or within the tank firewall, whichever is farther.

3.1.4.5 Survey of Hazardous Areas

Carefully survey the entire area around the tank to be cleaned to ensure that there are no vapors present in the pit, low places, or hazardous areas and that all unauthorized personnel are cleared from the area. Ensure that there is no possibility of anyone smoking in the immediate vicinity. Hazardous areas are defined as follows:

a. Interior of tanks.

b. Areas within 100 feet from points having flammable vapor emissions which, for example, are from the exhaust manholes of tanks under repair, open vents or pressure vacuum vents (breather valves) of active tanks in the vicinity of tanks under repairs or cleaning. CAUTION: Allowance shall be made for 4 or more miles per hour winds by increasing the size of the hazardous area to a minimum of 200 feet on the downward side.

c. For aboveground tanks, all areas within a common impoundment dike up to the height of the dike walls and within 10 feet in all directions of the exterior surfaces of tank shell and roof.

3.1.4.6 Exit from a Tank During Emergencies

To permit quick, free exit from a tank during emergencies, keep the area around the tank openings and emergency routes clear of obstructions.

3.2 INSPECTION

3.2.1 Inspection of Equipment

3.2.1.1 Respirators

Respirator users shall inspect their respirators in strict accordance with the instructions provided by the manufacturer.

3.2.1.2 Air Hose from Breathing-Air Supply

If air line respirators are used, ensure that:

a. There are no breaks in outside covering;

b. Condition of gaskets is good;

c. Connections are tight; and

d. There are no restrictions in the hose.

3.2.1.3 Safety Harness and Life Line

Ensure that:

a. There is no frayed or weak material; and

b. Condition of harness is good.

3.2.1.4 Breathing-Air Supply Source

Ensure:

a. Good working condition; and

b. Location in vapor-free area.

c. Compliance with 29 CFR 1910.134 for breathing air quality, frequency of air analysis, and presence of safety devices.

d. Backup air supply source.

3.2.1.5 Monitoring Equipment

Calibrate each day before use:

a. Combustible gas indicator

b. Oxygen meter

c. H2S Indicator

3.2.1.6 Other Equipment

Ensure:

a. Proper grounding and bonding;

b. Explosion-proof motors; and

c. Explosion-proof lighting.

3.2.2 Personnel Inspection

3.2.2.1 Clothing

Personnel for Proper Attire Commensurate with Hazards Involved: Check for:

a. Clean clothing in good condition (wear freshly laundered clothing at the beginning of the job and at the start of each workday thereafter).

b. Boots and gloves of approved type and in good condition.

3.2.2.2 Breathing-Air Supply

If air line respirators are used, ensure that air is supplied to the facepiece at a rate of 4 to 15 cfm. If self-contained breathing apparatus are use, ensure sufficient number of full replacement cylinders are available to last the duration of the job.

3.2.2.3 Harness and Lifeline

Harness and lifeline shall be in good condition and properly attached.

3.2.2.4 Gum or Tobacco Chewing

Ensure that gum or tobacco chewing is prohibited.

3.2.2.5 Physical Defects or Injuries

Ensure that people have no physical defects or injuries which may prevent their wearing respirators or which may cause rescue to be difficult. No beards, sideburns, or large mustaches shall be allowed on people who must wear respirators.

3.2.2.6 Alcoholic Beverages and Drugs

Ensure that people entering the tank are not under influence of alcoholic beverages and drugs.

3.2.2.7 Counseling on Reproductive Hazards

Ensure that all employees have been counseled on and fully understand the reproductive hazards related to work in contaminated areas or in leaded gasoline or chemically contaminated tanks since they may be seriously affected by organic lead compounds or other chemical contaminants.

3.2.2.8 Hazardous Areas

Check hazardous areas as defined in paragraph entitled "Survey of Hazardous Areas."

3.3 TABLE OF TANK HISTORY

Tank Number	Tank Capacity (BBLS)	Date Constructed	Type of Lining (If Applicable)	Type of Fuel	Remarks from the Last Inspection
501	100,000	2013	Steel	JP-5	None
502	100,000	2013	Steel	JP-5	None
40	5,000	1944	Steel	JP-5	None
42	5,000	1944	Steel	JP-5	None
43	5,000	1944	Steel	JP-5	None

3.4 FUEL REMOVAL

Government personnel will transfer as much fuel as possible from the existing tanks to 400 series tanks utilizing existing and new piping and pumps. It is anticipated that less than 10 BBLS of residual fuel will remain in each tank. The residual fuel and sludge will remain the property of the government. Residual fuel and sludge from the tanks and fuel lines connected to the tanks, will be removed and loaded onto Contractor-provided tanker trucks and offloaded into the FOR system.

3.5 TANK CLEANING

The tanks shall be professionally cleaned and certified by an industrial hygienist or marine chemist for personnel entry after cleaning and before inspection or repairs.

The Contractor shall remove any residual fuel and sludge; clean the tanks and fuel lines connecting to the tanks; load residual fuel and sludge onto Contractor-provided tanker trucks; and offload at the FOR system. Liquids generated as a result of tank cleaning free of detergents and solvents may be collected and delivered to the OWWO facility at a cost to the Contractor dependent on volumes generated. The Contractor shall coordinate all deliveries of tank liquid and sludge wastes with the FOR and OWWO facility operators.

For the interior of the tanks, the shell, bottom, columns, roof, roof beams, and interior accessory equipment such as pumps, piping, and ladders, shall be cleaned not to bare metal but only to the sound surface of the lining or coating, free of rust, dirt, scale, loose materials, fuel, oil, grease, sludge, and other deleterious materials. Do not damage sound existing lining material. Immediately notify the Contracting Officer if the lining or coating is deteriorated or loose.

3.5.1 Monitoring

Monitoring of airborne concentrations of benzene in accordance with 29 CFR 1910.1028, and as specified herein. Air monitoring, testing, and reporting shall be performed by a CIH or an Industrial Hygiene (IH) Technician who is under the direction of the CIH.

a. The CIH or the IH Technician under the direction of the CIH shall be on the jobsite directing the monitoring, and inspecting the work to ensure that the requirements of the Contract have been satisfied during the entire operation.

b. Take personal air monitoring samples on employees who are anticipated to have the greatest risk of exposure as determined by the CIH. In addition, take air monitoring samples on at least 25 percent of the work crew or a minimum of two employees, whichever is greater, during each work shift.

c. Submit results of air monitoring samples, signed by the CIH, within 2 working days after the air samples are taken. Notify the Contracting Officer immediately of exposure to benzene at or in excess of 0.5 ppm.

3.5.1.1 Monitoring During Tank Cleaning Work

Perform personal and area monitoring during the entire tank cleaning operation. Sufficient area monitoring shall be conducted at the physical boundary to ensure unprotected personnel are not exposed above 0.5 ppm for benzene at all times. If the outside boundary lead levels are at or exceed benzene levels greater than 0.5 ppm, work shall be stopped and the CIH shall immediately correct the condition(s) causing the increased levels and notify the Contracting Officer immediately. The CIH shall review the sampling data collected on that day to determine if condition(s) requires any further change in work methods. Tank cleaning work shall resume when approval is given by the CIH. The Contractor shall control the benzene levels to less than 0.5 ppm at all times outside the work boundary area.

As a minimum, conduct area monitoring daily on each shift in which tank cleaning operations are performed in areas immediately adjacent to the control area. For outdoor operations, at least one sample on each shift shall be taken on the downwind side of the control area. If adjacent areas are contaminated, clean and visually inspect contaminated areas. The CIH shall certify that the area has been cleaned of contamination.

3.5.2 Water, Sediment, and Sludge Analysis

The Contractor shall be responsible for independently testing the water, sediment, and sludge in accordance with 40 CFR 261. Submit laboratory reports to the Contracting Officer describing sampling and testing procedures used, test results, and findings. If the results differ such that the Contractor must handle the waste differently from the method specified, notify the Contracting Officer, and the Contractor will be subject to an equitable adjustment to the Contract under the Changes clause of the Contract Clauses. If the Contractor's tests determine that the water, sediment, and sludge are hazardous, then the hazardous wastes shall be packaged, labeled, stored, transported, treated and disposed of in accordance with 40 CFR 260, 40 CFR 261, 40 CFR 262, 40 CFR 263, 40 CFR 264, 40 CFR 265, and 40 CFR 266. Transporters, storers, treaters and disposers must be certified and have EPA ID numbers. Payment for disposal of hazardous waste will not be made until a completed hazardous waste manifest from the treatment or disposal facility is returned, and a copy furnished to the Government. Nonhazardous or hazardous wastes shall be handled and disposed of as described below.

3.5.3 Water Removal and Disposal

Pump or otherwise remove water from the tank. Ensure that the sludge and sediment are not pumped out or mixed with the water. The Contractor shall remove all wash and rinse water from the tanks and transport/dispose of the water at the OWWO facility at DFSP Craney. Liquids must be free of solvents and detergents. Contractor will be responsible for payment to OWWO facility which is dependant on the volume of oily water generated.

3.5.4 Sludge and Sediment Removal and Disposal

Squeegee or brush any sludge, sediment, or other loose material into piles, shovel into buckets or other suitable containers, and remove from the tank. The Contractor shall transport and dispose of these materials at the FOR facility.

3.5.5 Washing

After water, fuel, and sludge have been removed, thoroughly wash the tank interior. Minimize the use of water; substitute brushing when practical. Start washing at the top of the walls and columns and work down to the floor. Wash the floor last starting from the sides and working towards the sump. Wash to remove oil, sludge, wax, tar, and other fuel residue adhering to the surface. Wash by any one or a combination of the following methods, however if detergents or solvents are used by the Contractor then all wash water must be collected and disposed of off site per state and local regulations.

a. Use only fresh water under pressure.

b. Apply a detergent conforming to FS O-D-1276 by spray or brush and soak approximately 30 minutes.

c. Apply a detergent cleaning solution by spray or brush and allow to soak approximately 30 minutes. The cleaning solution shall be either a one-to-one ratio of detergent conforming to FS O-D-1276 and solvent conforming to MIL-PRF-680 or an equivalent commercial cleaning agent as approved by the Contracting Officer.

d. Hand-scrub the surfaces vigorously with long-handled stiff-bristle brushes. Wet the brushes intermittently during scrubbing process. For heavily oil-soaked areas which still appear to retain some residue after first scrubbing, give a second application of cleaning agent and repeat the scrub process a second time. Scrub until clean.

e. Rinse the surfaces thoroughly with fresh water.

3.5.6 Wash Water, Detergent Solution, and Sediment Removal

During the washing process, operate a portable pump continuously with suction hose extended to the tank bottom to remove water, detergent, dirt, oil, or other loose materials washed off. Following the final rinse, pump, squeegee, and mop the tank dry.

a. Prior to discharge or disposal, test the wash water, sediment, and sludge in accordance with paragraph entitled "Water, Sediment, and Sludge Analysis." The Contractor shall furnish temporary tanks to hold water and detergent solution until testing is completed.

b. The wash water shall be handled in accordance with paragraph entitled "Water Removal and Disposal" only if no detergents or solvents were not used for tank cleaning. Any wash water with detergents or solvents must be collected and disposed of off site per state and local regulations at the Contractors cost.

c. For bidding purposes, assume the water and detergent solution is nonhazardous and can be disposed of at the FOR facility at a cost of $0.036 per gallon.

3.5.7 Special Instructions for Cleaning Tank Storage JP-5 Fuel

a. Comply with the precautions and procedures outlined above for cleaning petroleum storage tanks.

b. Use respiratory equipment specified for "Respiratory Protection" under paragraph entitled "Equipment," in this section, at all times, regardless whether or not combustible gas indicator indicates any vapors present in the tank. Wear the respiratory protective equipment continuously until the tank side and bottom has been thoroughly cleaned, washed and dried.

3.5.8 Special Precautions

Special Precautions for Tanks with Pipe Columns and Braces:

a. Pipes used for columns and braces, are a potential source of explosive vapors even after the tank is cleaned. The tank may be determined to be vapor free below 4 percent of lower explosive limit; but after one or two hours, explosive readings must again be obtained from these sources. The Contractor shall take readings at least every half hour when working in tanks after they have been cleaned and each floating

roof or pan pontoon shall be checked individually with a combustible gas indicator.

b. If the repair work is to be performed on floating roof tanks, the interior of each pontoon on the roof shall be thoroughly cleaned of fuel, rust, water, and debris.

3.6 FINAL CLEAN-UP

After the Contracting Officer has inspected and accepted the tank cleaning and before final inspection, accomplish the following work:

3.6.1 Stenciling Tank

Stencil on the tank in 3/4 inch letters adjacent to the manhole openings the following data:

Date Cleaned

Contractor Name

Address

3.6.2 Restoration of Site to Original Condition

Do not reconnect pipelines until application of interior and exterior coatings specified in other sections of this specification, have been completed. Replace valves, piping, manhole covers, and similar items which were removed at the start of the job with new gasket material resistant to fuel. Pressure check valves and piping. Remove, from the site, debris and equipment and materials used for the cleaning operations. Restore the site to its original condition.

-- End of Section --

SECTION 33 71 02

UNDERGROUND ELECTRICAL DISTRIBUTION
02/14

PART 1 GENERAL

1.1 REFERENCES

The publications listed below form a part of this specification to the extent referenced. The publications are referred to within the text by the basic designation only.

AMERICAN ASSOCIATION OF STATE HIGHWAY AND TRANSPORTATION OFFICIALS (AASHTO)

AASHTO HB-17	(2002; Errata 2003; Errata 2005, 17th Edition) Standard Specifications for Highway Bridges

AMERICAN CONCRETE INSTITUTE INTERNATIONAL (ACI)

ACI 318M	(2011; Errata 2013) Building Code Requirements for Structural Concrete & Commentary
ACI SP-66	(2004) ACI Detailing Manual

ASSOCIATION OF EDISON ILLUMINATING COMPANIES (AEIC)

AEIC CS8	(2007) specification for Extruded Dielectric Shielded Power Cables Rated 5 Through 46 kV

ASTM INTERNATIONAL (ASTM)

ASTM B1	(2013) Standard Specification for Hard-Drawn Copper Wire
ASTM B3	(2013) Standard Specification for Soft or Annealed Copper Wire
ASTM B496	(2013a) Standard Specification for Compact Round Concentric-Lay-Stranded Copper Conductors
ASTM B8	(2011) Standard Specification for Concentric-Lay-Stranded Copper Conductors, Hard, Medium-Hard, or Soft
ASTM C309	(2011) Standard Specification for Liquid Membrane-Forming Compounds for Curing Concrete
ASTM C32	(2013) Standard Specification for Sewer and Manhole Brick (Made from Clay or Shale)

ASTM C478	(2013) Standard Specification for Precast Reinforced Concrete Manhole Sections
ASTM C857	(2013) Standard Practice for Minimum Structural Design Loading for Underground Precast Concrete Utility Structures
ASTM C990	(2009) Standard Specification for Joints for Concrete Pipe, Manholes and Precast Box Sections Using Preformed Flexible Joint Sealants
ASTM F512	(2012) Smooth-Wall Poly (Vinyl Chloride) (PVC) Conduit and Fittings for Underground Installation

INSTITUTE OF ELECTRICAL AND ELECTRONICS ENGINEERS (IEEE)

IEEE 400.2	(2013) Guide for Field Testing of Shielded Power Cable Systems Using Very Low Frequency (VLF)
IEEE 404	(2012) Standard for Extruded and Laminated Dielectric Shielded Cable Joints Rated 2500 V to 500,000 V
IEEE 48	(2009) Standard for Test Procedures and Requirements for Alternating-Current Cable Terminations Used on Shielded Cables Having Laminated Insulation Rated 2.5 kV through 765 kV or Extruded Insulation Rated 2.5 kV through 500 kV
IEEE 81	(2012) Guide for Measuring Earth Resistivity, Ground Impedance, and Earth Surface Potentials of a Ground System
IEEE C2	(2012; Errata 2012; INT 1-4 2012; INT 5-6 2013) National Electrical Safety Code
IEEE Stds Dictionary	(2009) IEEE Standards Dictionary: Glossary of Terms & Definitions

INTERNATIONAL ELECTRICAL TESTING ASSOCIATION (NETA)

NETA ATS	(2013) Standard for Acceptance Testing Specifications for Electrical Power Equipment and Systems

NATIONAL ELECTRICAL MANUFACTURERS ASSOCIATION (NEMA)

ANSI C119.1	(2011) Electric Connectors - Sealed Insulated Underground Connector Systems Rated 600 Volts
ANSI/NEMA WC 71/ICEA S-96-659	(1999) Standard for Nonshielded Cables Rated 2001-5000 Volts for use in the Distribution of Electric Energy

NEMA RN 1	(2005; R 2013) Polyvinyl-Chloride (PVC) Externally Coated Galvanized Rigid Steel Conduit and Intermediate Metal Conduit
NEMA TC 14	(2002) Standard for Reinforced Thermosetting Resin Conduit (RTRC) and Fittings
NEMA TC 2	(2013) Standard for Electrical Polyvinyl Chloride (PVC) Conduit
NEMA TC 9	(2004) Standard for Fittings for Polyvinyl Chloride (PVC) Plastic Utilities Duct for Underground Installation
NEMA WC 74/ICEA S-93-639	(2012) 5-46 kV Shielded Power Cable for Use in the Transmission and Distribution of Electric Energy

NATIONAL FIRE PROTECTION ASSOCIATION (NFPA)

NFPA 70	(2014; AMD 1 2013; Errata 2013; AMD 2 2013) National Electrical Code

TELECOMMUNICATIONS INDUSTRY ASSOCIATION (TIA)

TIA-758	(2012b) Customer-Owned Outside Plant Telecommunications Infrastructure Standard

U.S. DEPARTMENT OF AGRICULTURE (USDA)

RUS Bull 1751F-644	(2002) Underground Plant Construction

U.S. GENERAL SERVICES ADMINISTRATION (GSA)

CID A-A-60005	(Basic; Notice 2) Frames, Covers, Gratings, Steps, Sump And Catch Basin, Manhole

UNDERWRITERS LABORATORIES (UL)

UL 1072	(2006; Reprint Jun 2013) Medium-Voltage Power Cables
UL 44	(2010) Thermoset-Insulated Wires and Cables
UL 486A-486B	(2013) Wire Connectors
UL 510	(2005; Reprint Jul 2013) Polyvinyl Chloride, Polyethylene and Rubber Insulating Tape
UL 514A	(2013) Metallic Outlet Boxes
UL 514B	(2012) Conduit, Tubing and Cable Fittings
UL 6	(2007; reprint Nov 2010) Electrical Rigid Metal Conduit-Steel

UL 651	(2011; Reprint Mar 2012) Standard for Schedule 40 and 80 Rigid PVC Conduit and Fittings
UL 83	(2008) Thermoplastic-Insulated Wires and Cables
UL 854	(2004; Reprint Sep 2011) Standard for Service-Entrance Cables

1.2 DEFINITIONS

a. Unless otherwise specified or indicated, electrical and electronics terms used in these specifications, and on the drawings, are as defined in IEEE Stds Dictionary.

b. In the text of this section, the words conduit and duct are used interchangeably and have the same meaning.

c. In the text of this section, "medium voltage cable splices," and "medium voltage cable joints" are used interchangeably and have the same meaning.

1.3 SUBMITTALS

Government approval is required for submittals with a "G" designation; submittals not having a "G" designation are for Contractor Quality Control approval. Submit the following in accordance with Section 01 33 00 SUBMITTAL PROCEDURES:

SD-02 Shop Drawings

Precast underground structures; G

SD-03 Product Data

Medium voltage cable; G

Medium voltage cable joints; G

Medium voltage cable terminations; G

Precast concrete structures; G

Sealing Material

Pulling-In Irons

Manhole frames and covers; G

Handhole frames and covers; G

Cable supports (racks, arms and insulators); G

SD-06 Test Reports

Medium voltage cable qualification and production tests; G

Field Acceptance Checks and Tests; G

Arc-proofing test for cable fireproofing tape; G

Cable Installation Plan and Procedure; G

Six copies of the information described below in 8-1/2 by 11 inch binders having a minimum of three rings from which material may readily be removed and replaced, including a separate section for each cable pull. Separate sections by heavy plastic dividers with tabs, with all data sheets signed and dated by the person supervising the pull.

a. Site layout drawing with cable pulls numerically identified.

b. A list of equipment used, with calibration certifications. The manufacturer and quantity of lubricant used on pull.

c. The cable manufacturer and type of cable.

d. The dates of cable pulls, time of day, and ambient temperature.

e. The length of cable pull and calculated cable pulling tensions.

f. The actual cable pulling tensions encountered during pull.

SD-07 Certificates

Cable splicer/terminator; G

Cable Installer Qualifications; G

1.4 QUALITY ASSURANCE

1.4.1 Precast Underground Structures

Submittal required for each type used. Provide calculations and drawings for precast manholes and handholes bearing the seal of a registered professional engineer including:

a. Material description (i.e., f'c and Fy)

b. Manufacturer's printed assembly and installation instructions

c. Design calculations

d. Reinforcing shop drawings in accordance with ACI SP-66

e. Plans and elevations showing opening and pulling-in iron locations and details

1.4.2 Certificate of Competency for Cable Splicer/Terminator

The cable splicer/terminator must have a certification from the National Cable Splicing Certification Board (NCSCB) in the field of splicing and terminating shielded medium voltage (5 kV to 35 kV) power cable using pre-manufactured kits (pre-molded, heat-shrink, cold shrink). Submit "Proof of Certification" for approval, for the individuals that will be performing cable splicer and termination work, 30 days before splices or terminations are to be made.

1.4.3 Cable Installer Qualifications

Provide at least one onsite person in a supervisory position with a documentable level of competency and experience to supervise all cable pulling operations. Provide a resume showing the cable installers' experience in the last three years, including a list of references complete with points of contact, addresses and telephone numbers. Cable installer must demonstrate experience with a minimum of three medium voltage cable installations. The Contracting Officer reserves the right to require additional proof of competency or to reject the individual and call for an alternate qualified cable installer.

1.4.4 Regulatory Requirements

In each of the publications referred to herein, consider the advisory provisions to be mandatory, as though the word, "must" had been substituted for "should" wherever it appears. Interpret references in these publications to the "authority having jurisdiction," or words of similar meaning, to mean the Contracting Officer. Equipment, materials, installation, and workmanship must be in accordance with the mandatory and advisory provisions of IEEE C2 and NFPA 70 unless more stringent requirements are specified or indicated.

1.4.5 Standard Products

Provide materials and equipment that are products of manufacturers regularly engaged in the production of such products which are of equal material, design and workmanship. Products must have been in satisfactory commercial or industrial use for 2 years prior to bid opening. The 2-year period must include applications of equipment and materials under similar circumstances and of similar size. The product must have been for sale on the commercial market through advertisements, manufacturers' catalogs, or brochures during the 2-year period. Where two or more items of the same class of equipment are required, these items must be products of a single manufacturer; however, the component parts of the item need not be the products of the same manufacturer unless stated in this section.

1.4.5.1 Alternative Qualifications

Products having less than a 2-year field service record will be acceptable if a certified record of satisfactory field operation for not less than 6000 hours, exclusive of the manufacturers' factory or laboratory tests, is furnished.

1.4.5.2 Material and Equipment Manufacturing Date

Products manufactured more than 3 years prior to date of delivery to site are not acceptable, unless specified otherwise.

PART 2 PRODUCTS

2.1 CONDUIT, DUCTS, AND FITTINGS

2.1.1 Rigid Metal Conduit

UL 6.

2.1.1.1 Rigid Metallic Conduit, PVC Coated

NEMA RN 1, Type A40, except that hardness must be nominal 85 Shore A durometer, dielectric strength must be minimum 400 volts per mil at 60 Hz, and tensile strength must be minimum 3500 psi.

2.1.2 Plastic Conduit for Direct Burial

UL 651, Schedule 40 as indicated NEMA TC 2, EPC-40-PVC as indicated.

2.1.3 Nonmetallic Duct for Concrete Encasement

UL 651 and ASTM F512, NEMA TC 2, Type EPC-40-PVC, NEMA TC 14, Type RTRC or as indicated.

2.1.4 Innerduct

Provide corrugated or solid wall polyethylene (PE) or PVC innerducts, or fabric-mesh innerducts, with pullwire. Size as indicated.

2.1.5 Conduit Sealing Compound

Compounds for sealing ducts and conduit must have a putty-like consistency workable with the hands at temperatures as low as 35 degrees F, must neither slump at a temperature of 300 degrees F, nor harden materially when exposed to the air. Compounds must adhere to clean surfaces of fiber or plastic ducts; metallic conduits or conduit coatings; concrete, masonry, or lead; any cable sheaths, jackets, covers, or insulation materials; and the common metals. Compounds must form a seal without dissolving, noticeably changing characteristics, or removing any of the ingredients. Compounds must have no injurious effect upon the hands of workmen or upon materials.

2.1.6 Fittings

2.1.6.1 Metal Fittings

UL 514B.

2.1.6.2 PVC Conduit Fittings

UL 514B, UL 651.

2.1.6.3 PVC Duct Fittings

NEMA TC 9.

2.1.6.4 Outlet Boxes for Steel Conduit

Outlet boxes for use with rigid or flexible steel conduit must be cast-metal cadmium or zinc-coated if of ferrous metal with gasketed closures and must conform to UL 514A.

2.2 LOW VOLTAGE INSULATED CONDUCTORS AND CABLES

Insulated conductors must be rated 600 volts and conform to the requirements of NFPA 70, including listing requirements. Wires and cables manufactured more than 12 months prior to date of delivery to the site are not acceptable. Service entrance conductors must conform to UL 854, type XHHW-2.

2.2.1 Conductor Types

Cable and duct sizes indicated are for copper conductors and THHN/THWN unless otherwise noted. All conductors in 600V cables shall be stranded, except that solid #12 conductors may be used for lighting and receptacle applications. All conductors must be copper.

2.2.2 Conductor Material

Unless specified or indicated otherwise or required by NFPA 70, wires in conduit, other than service entrance, must be 600-volt, Type THWN/THHN-2 conforming to UL 83 or Type XHHW-2 conforming to UL 44. Copper conductors must be annealed copper complying with ASTM B3 and ASTM B8.

2.2.3 Jackets

Multiconductor cables must have an overall PVC outer jacket.

2.2.4 Cable Marking

Insulated conductors must have the date of manufacture and other identification imprinted on the outer surface of each cable at regular intervals throughout the cable length.

Identify each cable by means of a fiber, laminated plastic, or non-ferrous metal tags, or approved equal, in each manhole, handhole, junction box, and each terminal. Each tag must contain the following information; cable type, conductor size, circuit number, circuit voltage, cable destination and phase identification.

Conductors must be color coded. Provide conductor identification within each enclosure where a tap, splice, or termination is made. Conductor identification must be by color-coded insulated conductors, plastic-coated self-sticking printed markers, colored nylon cable ties and plates, heat shrink type sleeves,or colored electrical tape. Control circuit terminations must be properly identified. Color must be green for grounding conductors and white for neutrals; except where neutrals of more than one system are installed in same raceway or box, other neutrals must be white with a different colored (not green) stripe for each. Color of ungrounded conductors in different voltage systems must be as follows:

a. 208/120 volt, three-phase

(1) Phase A - black

(2) Phase B - red

(3) Phase C - blue

b. 480/277 volt, three-phase

(1) Phase A - brown

(2) Phase B - orange

(3) Phase C - yellow

c. 120/240 volt, single phase: Black and red

2.3 LOW VOLTAGE WIRE CONNECTORS AND TERMINALS

Must provide a uniform compression over the entire conductor contact surface. Use solderless terminal lugs on stranded conductors.

a. For use with copper conductors: UL 486A-486B.

2.4 LOW VOLTAGE SPLICES

Provide splices in conductors with a compression connector on the conductor and by insulating and waterproofing using one of the following methods which are suitable for continuous submersion in water and comply with ANSI C119.1.

2.4.1 Heat Shrinkable Splice

Provide heat shrinkable splice insulation by means of a thermoplastic adhesive sealant material applied in accordance with the manufacturer's written instructions.

2.4.2 Cold Shrink Rubber Splice

Provide a cold-shrink rubber splice which consists of EPDM rubber tube which has been factory stretched onto a spiraled core which is removed during splice installation. The installation must not require heat or flame, or any additional materials such as covering or adhesive. It must be designed for use with inline compression type connectors, or indoor, outdoor, direct-burial or submerged locations.

2.5 MEDIUM VOLTAGE CABLE

Cable (conductor) sizes are designated by American Wire Gauge (AWG) and Thousand Circular Mils (Kcmil). Conductor and conduit sizes indicated are for copper conductors unless otherwise noted. Insulated conductors must have the date of manufacture and other identification imprinted on the outer surface of each cable at regular intervals throughout cable length. Wires and cables manufactured more than 12 months prior to date of delivery to the site are not acceptable. Provide single conductor type cables unless otherwise indicated.

2.5.1 Cable Configuration

Provide Type MV cable, conforming to NEMA WC 74/ICEA S-93-639 and UL 1072. Provide cables manufactured for use in duct applications as indicated. Cable must be rated 15 kV as indicated with 133 percent insulation level.

2.5.2 Conductor Material

Provide concentric-lay-stranded, Class B compact round conductors. Provide soft drawn copper cables complying with ASTM B3 and ASTM B8 for regular concentric and compressed stranding or ASTM B496 for compact stranding.

2.5.3 Insulation

Provide ethylene-propylene-rubber (EPR) insulation conforming to the requirements of ANSI/NEMA WC 71/ICEA S-96-659 and AEIC CS8.

2.5.4 Shielding

Cables rated for 2 kV and above must have a semiconducting conductor shield, a semiconducting insulation shield, and an overall copper tape shield for each phase.

2.5.5 Neutrals

Neutral conductors must be copper, employing the same insulation and jacket materials as phase conductors, except that a 600-volt insulation rating is acceptable.

2.5.6 Jackets

Provide cables with a PVC jacket. Provide PVC jackets with a separator that prevents contact with underlying semiconducting insulating shield.

2.6 MEDIUM VOLTAGE CABLE TERMINATIONS

IEEE 48 Class 1; of the molded elastomer, prestretched elastomer, or heat-shrinkable elastomer. Acceptable elastomers are track-resistant silicone rubber or track-resistant ethylene propylene compounds, such as ethylene propylene rubber or ethylene propylene diene monomer. Separable insulated connectors may be used for apparatus terminations, when such apparatus is provided with suitable bushings. Terminations, where required, must be provided with mounting brackets suitable for the intended installation and with grounding provisions for the cable shielding, metallic sheath, or armor. Terminations must be provided in a kit, including: skirts, stress control terminator, ground clamp, connectors, lugs, and complete instructions for assembly and installation. Terminations must be the product of one manufacturer, suitable for the type, diameter, insulation class and level, and materials of the cable terminated. Do not use separate parts of copper or copper alloy in contact with aluminum alloy parts in the construction or installation of the terminator.

2.6.1 Cold-Shrink Type

Terminator must be a one-piece design, utilizing the manufacturer's latest technology, where high-dielectric constant (capacitive) stress control is integrated within a skirted insulator made of silicone rubber. Termination must not require heat or flame for installation. Termination kit must contain all necessary materials (except for the lugs). Termination must be designed for installation in low or highly contaminated indoor and outdoor locations and must resist ultraviolet rays and oxidative decomposition.

2.6.2 Heat Shrinkable Type

Terminator must consist of a uniform cross section heat shrinkable polymeric construction stress relief tubing and environmentally sealed outer covering that is nontracking, resists heavy atmospheric contaminants, ultra violet rays and oxidative decomposition. Provide heat shrinkable sheds or skirts of the same material. Termination must be designed for installation in low or highly contaminated indoor or outdoor locations.

2.7 MEDIUM VOLTAGE CABLE JOINTS

Provide joints (splices) in accordance with IEEE 404 suitable for the rated voltage, insulation level, insulation type, and construction of the cable.

Joints must be certified by the manufacturer for waterproof, submersible applications. Upon request, supply manufacturer's design qualification test report in accordance with IEEE 404. Connectors for joint must be tin-plated electrolytic copper, having ends tapered and having center stops to equalize cable insertion.

2.7.1 Heat-Shrinkable Joint

Consists of a uniform cross-section heat-shrinkable polymeric construction with a linear stress relief system, a high dielectric strength insulating material, and an integrally bonded outer conductor layer for shielding. Replace original cable jacket with a heavy-wall heat-shrinkable sleeve with hot-melt adhesive coating.

2.7.2 Cold-Shrink Rubber-Type Joint

Joint must be of a cold shrink design that does not require any heat source for its installation. Splice insulation and jacket must be of a one-piece factory formed cold shrink sleeve made of black EPDM rubber. Splice must be packaged three splices per kit, including complete installation instructions.

2.8 TAPE

2.8.1 Insulating Tape

UL 510, plastic insulating tape, capable of performing in a continuous temperature environment of 80 degrees C.

2.8.2 Buried Warning and Identification Tape

Provide detectable tape in accordance with Section 31 23 00.00 20 EXCAVATION AND FILL.

2.8.3 Fireproofing Tape

Provide tape composed of a flexible conformable unsupported intumescent elastomer. Tape must be not less than .030 inch thick, noncorrosive to cable sheath, self-extinguishing, noncombustible, and must not deteriorate when subjected to oil, water, gases, salt water, sewage, and fungus.

2.9 PULL ROPE

Plastic or flat pull line (bull line) having a minimum tensile strength of 200 pounds.

2.10 GROUNDING AND BONDING

2.10.1 Driven Ground Rods

Provide ground rods in accordance with Section 26 20 00 INTERIOR DISTRIBUTION SYSTEM.

2.10.2 Grounding Conductors

Stranded-bare copper conductors must conform to ASTM B8, Class B, soft-drawn unless otherwise indicated. Solid-bare copper conductors must conform to ASTM B1 for sizes No. 8 and smaller. Insulated conductors must be of the same material as phase conductors and green color-coded, except

that conductors must be rated no more than 600 volts. Aluminum is not acceptable.

2.11 CAST-IN-PLACE CONCRETE

Provide concrete in accordance with Section 03 30 00 CAST-IN-PLACE CONCRETE. In addition, provide concrete for encasement of underground ducts with 3000 psi minimum 28-day compressive strength. Concrete associated with electrical work for other than encasement of underground ducts must be 4000 psi minimum 28-day compressive strength unless specified otherwise.

2.12 UNDERGROUND STRUCTURES

Provide precast concrete underground structures or standard type cast-in-place manhole types as indicated, conforming to ASTM C857 and ASTM C478. Top, walls, and bottom must consist of reinforced concrete. Walls and bottom must be of monolithic concrete construction. Locate duct entrances and windows near the corners of structures to facilitate cable racking. Covers must fit the frames without undue play. Form steel and iron to shape and size with sharp lines and angles. Castings must be free from warp and blow holes that may impair strength or appearance. Exposed metal must have a smooth finish and sharp lines and arises. Provide necessary lugs, rabbets, and brackets. Set pulling-in irons and other built-in items in place before depositing concrete. Install a pulling-in iron in the wall opposite each duct line entrance. Cable racks, including rack arms and insulators, must be adequate to accommodate the cable.

2.12.1 Cast-In-Place Concrete Structures

Concrete must conform to Section 03 30 00 CAST-IN-PLACE CONCRETE. Construct walls on a footing of cast-in-place concrete except that precast concrete base sections may be used for precast concrete manhole risers.

2.12.2 Precast Concrete Structures, Risers and Tops

Precast concrete underground structures may be provided in lieu of cast-in-place subject to the requirements specified below. Precast units must be the product of a manufacturer regularly engaged in the manufacture of precast concrete products, including precast manholes.

2.12.2.1 General

Precast concrete structures must have the same accessories and facilities as required for cast-in-place structures. Likewise, precast structures must have plan area and clear heights not less than those of cast-in-place structures. Concrete materials and methods of construction must be the same as for cast-in-place concrete construction, as modified herein. Slope in floor may be omitted provided precast sections are poured in reinforced steel forms. Concrete for precast work must have a 28-day compressive strength of not less than 4000 psi. Structures may be precast to the design and details indicated for cast-in-place construction, precast monolithically and placed as a unit, or structures may be assembled sections, designed and produced by the manufacturer in accordance with the requirements specified. Structures must be identified with the manufacturer's name embedded in or otherwise permanently attached to an interior wall face.

2.12.2.2 Design for Precast Structures

ACI 318M. In the absence of detailed on-site soil information, design for the following soil parameters/site conditions:

a. Angle of Internal Friction (phi) = 30 degrees

b. Unit Weight of Soil (Dry) = 110 pcf, (Saturated) = 130 pcf

c. Coefficient of Lateral Earth Pressure (Ka) = 0.33

d. Ground Water Level = 3 feet below ground elevation

e. Vertical design loads must include full dead, superimposed dead, and live loads including a 30 percent magnification factor for impact. Live loads must consider all types and magnitudes of vehicular (automotive, industrial, or aircraft) traffic to be encountered. The minimum design vertical load must be for H20 highway loading per AASHTO HB-17.

f. Horizontal design loads must include full geostatic and hydrostatic pressures for the soil parameters, water table, and depth of installation to be encountered. Also, horizontal loads imposed by adjacent structure foundations, and horizontal load components of vertical design loads, including impact, must be considered, along with a pulling-in iron design load of 6000 pounds.

g. Each structural component must be designed for the load combination and positioning resulting in the maximum shear and moment for that particular component.

h. Design must also consider the live loads induced in the handling, installation, and backfilling of the manholes. Provide lifting devices to ensure structural integrity during handling and installation.

2.12.2.3 Construction

Structure top, bottom, and wall must be of a uniform thickness of not less than 6 inches. Thin-walled knock-out panels for designed or future duct bank entrances are not permitted. Provide quantity, size, and location of duct bank entrance windows as directed, and cast completely open by the precaster. Size of windows must exceed the nominal duct bank envelope dimensions by at least 12 inches vertically and horizontally to preclude in-field window modifications made necessary by duct bank misalignment. However, the sides of precast windows must be a minimum of 6 inches from the inside surface of adjacent walls, floors, or ceilings. Form the perimeter of precast window openings to have a keyed or inward flared surface to provide a positive interlock with the mating duct bank envelope. Provide welded wire fabric reinforcing through window openings for in-field cutting and flaring into duct bank envelopes. Provide additional reinforcing steel comprised of at least two No. 4 bars around window openings. Provide drain sumps a minimum of 12 inches in diameter and 4 inches deep for precast structures.

2.12.2.4 Joints

Provide tongue-and-groove joints on mating edges of precast components. Shiplap joints are not allowed. Design joints to firmly interlock

adjoining components and to provide waterproof junctions and adequate shear transfer. Seal joints watertight using preformed plastic strip conforming to ASTM C990. Install sealing material in strict accordance with the sealant manufacturer's printed instructions. Provide waterproofing at conduit/duct entrances into structures, and where access frame meets the top slab, provide continuous grout seal.

2.12.3 Manhole Frames and Covers

Provide cast iron frames and covers for manholes conforming to CID A-A-60005. Cast the words "ELECTRIC" or "TELECOMMUNICATIONS" in the top face of power and telecommunications manhole covers, respectively.

2.12.4 Handhole Frames and Covers

Frames and covers of steel must be welded by qualified welders in accordance with standard commercial practice. Steel covers must be rolled-steel floor plate having an approved antislip surface. Hinges must be of stainless steel with bronze hinge pin, 5 by 5 inches by approximately 3/16 inch thick, without screw holes, and must be for full surface application by fillet welding. Hinges must have nonremovable pins and five knuckles. The surfaces of plates under hinges must be true after the removal of raised antislip surface, by grinding or other approved method.

2.12.5 Brick for Manhole Collar

Provide sewer and manhole brick conforming to ASTM C32, Grade MS.

2.13 CABLE SUPPORTS (RACKS, ARMS, AND INSULATORS)

The metal portion of racks and arms must be zinc-coated after fabrication.

2.13.1 Cable Rack Stanchions

The wall bracket or stanchion must be 4 inches by approximately 1-1/2 inch by 3/16 inch channel steel, or 4 inches by approximately 1 inch glass-reinforced nylon with recessed bolt mounting holes, 48 inches long (minimum) in manholes. Slots for mounting cable rack arms must be spaced at 8 inch intervals.

2.13.2 Rack Arms

Cable rack arms must be steel or malleable iron or glass reinforced nylon and must be of the removable type. Rack arm length must be a minimum of 8 inches and a maximum of 12 inches.

2.13.3 Insulators

Insulators for metal rack arms must be dry-process glazed porcelain. Insulators are not required for nylon arms.

2.14 CABLE TAGS IN MANHOLES

Provide tags for each power cable located in manholes. The tags must be polyethylene. Do not provide handwritten letters. The first position on the power cable tag must denote the voltage. The second through sixth positions on the tag must identify the circuit. The next to last position must denote the phase of the circuit and include the Greek "phi" symbol. The last position must denote the cable size. As an example, a tag could

have the following designation: "11.5 NAS 1-8(Phase A)500," denoting that the tagged cable is on the 11.5kV system circuit number NAS 1-8, underground, Phase A, sized at 500 kcmil.

2.14.1 Polyethylene Cable Tags

Provide tags of polyethylene that have an average tensile strength of 3250 pounds per square inch; and that are 0.08 inch thick (minimum), non-corrosive non-conductive; resistive to acids, alkalis, organic solvents, and salt water; and distortion resistant to 170 degrees F. Provide 0.05 inch (minimum) thick black polyethylene tag holder. Provide a one-piece nylon, self-locking tie at each end of the cable tag. Ties must have a minimum loop tensile strength of 175 pounds. The cable tags must have black block letters, numbers, and symbols one inch high on a yellow background. Letters, numbers, and symbols must not fall off or change positions regardless of the cable tags' orientation.

2.15 SOURCE QUALITY CONTROL

2.15.1 Arc-Proofing Test for Cable Fireproofing Tape

Manufacturer must test one sample assembly consisting of a straight lead tube 12 inches long with a 2 1/2 inch outside diameter, and a 1/8 inch thick wall, and covered with one-half lap layer of arc and fireproofing tape per manufacturer's instructions. The arc and fireproofing tape must withstand extreme temperature of a high-current fault arc 13,000 degrees K for 70 cycles as determined by using an argon directed plasma jet capable of constantly producing and maintaining an arc temperature of 13,000 degrees K. Temperature (13,000 degrees K) of the ignited arc between the cathode and anode must be obtained from a dc power source of 305 (plus or minus 5) amperes and 20 (plus or minus 1) volts. The arc must be directed toward the sample assembly accurately positioned 5 (plus or minus 1) millimeters downstream in the plasma from the anode orifice by fixed flow rate of argon gas (0.18 g per second). Each sample assembly must be tested at three unrelated points. Start time for tests must be taken from recorded peak current when the specimen is exposed to the full test temperature. Surface heat on the specimen prior to that time must be minimal. The end point is established when the plasma or conductive arc penetrates the protective tape and strikes the lead tube. Submittals for arc-proofing tape must indicate that the test has been performed and passed by the manufacturer.

2.15.2 Medium Voltage Cable Qualification and Production Tests

Results of AEIC CS8 qualification and production tests as applicable for each type of medium voltage cable.

PART 3 EXECUTION

3.1 INSTALLATION

Install equipment and devices in accordance with the manufacturer's published instructions and with the requirements and recommendations of NFPA 70 and IEEE C2 as applicable. In addition to these requirements, install telecommunications in accordance with TIA-758 and RUS Bull 1751F-644.

3.2 CABLE INSPECTION

Inspect each cable reel for correct storage positions, signs of physical

damage, and broken end seals prior to installation. If end seal is broken, remove moisture from cable prior to installation in accordance with the cable manufacturer's recommendations.

3.3 CABLE INSTALLATION PLAN AND PROCEDURE

Obtain from the manufacturer an installation manual or set of instructions which addresses such aspects as cable construction, insulation type, cable diameter, bending radius, cable temperature limits for installation, lubricants, coefficient of friction, conduit cleaning, storage procedures, moisture seals, testing for and purging moisture, maximum allowable pulling tension, and maximum allowable sidewall bearing pressure. Prepare a checklist of significant requirements and submit along with the manufacturer's instructions in accordance with SUBMITTALS. Install cable strictly in accordance with the cable manufacturer's recommendations and the approved installation plan.

Calculations and pulling plan must include:

a. Site layout drawing with cable pulls identified in numeric order of expected pulling sequence and direction of cable pull.

b. List of cable installation equipment.

c. Lubricant manufacturer's application instructions.

d. Procedure for resealing cable ends to prevent moisture from entering cable.

e. Cable pulling tension calculations of all cable pulls.

f. Cable percentage conduit fill.

g. Cable sidewall bearing pressure.

h. Cable minimum bend radius and minimum diameter of pulling wheels used.

i. Cable jam ratio.

j. Maximum allowable pulling tension on each different type and size of conductor.

k. Maximum allowable pulling tension on pulling device.

3.4 UNDERGROUND FEEDERS SUPPLYING BUILDINGS

Terminate underground feeders supplying building at a point 5 feet outside the building and projections thereof, except that conductors must be continuous to the terminating point indicated. Coordinate connections of the feeders to the service entrance equipment with Section 26 20 00 INTERIOR DISTRIBUTION SYSTEM. Provide RTRC conduit from the supply equipment to a point 5 feet outside the building and projections thereof. Protect ends of underground conduit with plastic plugs until connections are made.

Encase the underground portion of the conduit in a concrete envelope and bury as specified for underground duct with concrete encasement.

3.5 UNDERGROUND STRUCTURE CONSTRUCTION

Provide standard type cast-in-place construction as specified herein and as indicated, or precast construction as specified herein. Horizontal concrete surfaces of floors must have a smooth trowel finish. Cure concrete by applying two coats of white pigmented membrane forming-curing compound in strict accordance with the manufacturer's printed instructions, except that precast concrete may be steam cured. Curing compound must conform to ASTM C309. Locate duct entrances and windows in the center of end walls (shorter) and near the corners of sidewalls (longer) to facilitate cable racking and splicing. Covers for underground structures must fit the frames without undue play. Steel and iron must be formed to shape and size with sharp lines and angles. Castings must be free from warp and blow holes that may impair strength or appearance. Exposed metal must have a smooth finish and sharp lines and arises. Provide necessary lugs, rabbets, and brackets. Set pulling-in irons and other built-in items in place before depositing concrete. Manhole locations, as indicated, are approximate. Coordinate exact manhole locations with other utilities and finished grading and paving.

3.5.1 Cast-In-Place Concrete Structures

Construct walls on a footing of cast-in-place concrete except that precast concrete base sections may be used for precast concrete manhole risers.

3.5.2 Precast Concrete Construction

Set commercial precast structures on 6 inches of level, 90 percent compacted granular fill, 3/4 inch to 1 inch size, extending 12 inches beyond the structure on each side. Compact granular fill by a minimum of four passes with a plate type vibrator. Installation must additionally conform to the manufacturer's instructions.

3.5.3 Pulling-In Irons

Provide steel bars bent as indicated, and cast in the walls and floors. Alternatively, pipe sleeves may be precast into the walls and floors where required to accept U-bolts or other types of pulling-in devices possessing the strengths and clearances stated herein. The final installation of pulling-in devices must be made permanent. Cover and seal exterior projections of thru-wall type pulling-in devices with an appropriate protective coating. In the floor the irons must be a minimum of 6 inches from the edge of the sump, and in the walls the irons must be located within 6 inches of the projected center of the duct bank pattern or precast window in the opposite wall. However, the pulling-in iron must not be located within 6 inches of an adjacent interior surface, or duct or precast window located within the same wall as the iron. If a pulling-in iron cannot be located directly opposite the corresponding duct bank or precast window due to this clearance limitation, locate the iron directly above or below the projected center of the duct bank pattern or precast window the minimum distance required to preserve the 6 inch clearance previously stated. In the case of directly opposing precast windows, pulling-in irons consisting of a 3 foot length of No. 5 reinforcing bar, formed into a hairpin, may be cast-in-place within the precast windows simultaneously with the end of the corresponding duct bank envelope. Irons installed in this manner must be positioned directly in line with, or when not possible, directly above or below the projected center of the duct bank pattern entering the opposite wall, while maintaining a minimum clear distance of 3 inches from any edge of the cast-in-place duct bank envelope or any

individual duct. Pulling-in irons must have a clear projection into the structure of approximately 4 inches and must be designed to withstand a minimum pulling-in load of 6000 pounds. Irons must be hot-dipped galvanized after fabrication.

3.5.4 Cable Racks, Arms and Insulators

Cable racks, arms and insulators must be sufficient to accommodate the cables. Space racks in power manholes not more than 3 feet apart, and provide each manhole wall with a minimum of two racks. Space racks in signal manholes not more than 16 1/2 inches apart with the end rack being no further than 12 inches from the adjacent wall. Methods of anchoring cable racks must be as follows:

a. Provide a 5/8 inch diameter by 5 inch long anchor bolt with 3 inch foot cast in structure wall with 2 inch protrusion of threaded portion of bolt into structure. Provide 5/8 inch steel square head nut on each anchor bolt. Coat threads of anchor bolts with suitable coating immediately prior to installing nuts.

b. Provide concrete channel insert with a minimum load rating of 800 pounds per foot. Insert channel must be steel of the same length as "vertical rack channel;" channel insert must be cast flush in structure wall. Provide 5/8 inch steel nuts in channel insert to receive 5/8 inch diameter by 3 inch long steel, square head anchor bolts.

c. Provide concrete "spot insert" at each anchor bolt location, cast flush in structure wall. Each insert must have minimum 800 pound load rating. Provide 5/8 inch diameter by 3 inch long steel, square head anchor bolt at each anchor point. Coat threads of anchor bolts with suitable coating immediately prior to installing bolts.

3.5.5 Field Painting

Cast-iron frames and covers not buried in concrete or masonry must be cleaned of mortar, rust, grease, dirt and other deleterious materials, and given a coat of bituminous paint.

3.6 UNDERGROUND CONDUIT AND DUCT SYSTEMS

3.6.1 Requirements

Run conduit in straight lines except where a change of direction is necessary. Provide numbers and sizes of ducts as indicated. Ducts must have a continuous slope downward toward underground structures and away from buildings, laid with a minimum slope of 4 inches per 100 feet. Depending on the contour of the finished grade, the high-point may be at a terminal, a manhole, a handhole, or between manholes or handholes. Short-radius manufactured 90-degree duct bends may be used only for pole or equipment risers, unless specifically indicated as acceptable. The minimum manufactured bend radius must be 18 inches for ducts of less than 3 inch diameter, and 36 inches for ducts 3 inches or greater in diameter. Otherwise, long sweep bends having a minimum radius of 25 feet must be used for a change of direction of more than 5 degrees, either horizontally or vertically. Both curved and straight sections may be used to form long sweep bends, but the maximum curve used must be 30 degrees and manufactured bends must be used. Provide ducts with end bells whenever duct lines terminate in structures.

3.6.2 Treatment

Ducts must be kept clean of concrete, dirt, or foreign substances during construction. Field cuts requiring tapers must be made with proper tools and match factory tapers. A coupling recommended by the duct manufacturer must be used whenever an existing duct is connected to a duct of different material or shape. Ducts must be stored to avoid warping and deterioration with ends sufficiently plugged to prevent entry of any water or solid substances. Ducts must be thoroughly cleaned before being laid. Plastic ducts must be stored on a flat surface and protected from the direct rays of the sun.

3.6.3 Conduit Cleaning

As each conduit run is completed, for conduit sizes 3 inches and larger, draw a flexible testing mandrel approximately 12 inches long with a diameter less than the inside diameter of the conduit through the conduit. After which, draw a stiff bristle brush through until conduit is clear of particles of earth, sand and gravel; then immediately install conduit plugs. For conduit sizes less than 3 inches, draw a stiff bristle brush through until conduit is clear of particles of earth, sand and gravel; then immediately install conduit plugs.

3.6.4 Galvanized Conduit Concrete Penetrations

Galvanized conduits which penetrate concrete (slabs, pavement, and walls) in wet locations must be PVC coated and must extend from at least 2 inches within the concrete to the first coupling or fitting outside the concrete (minimum of 6 inches from penetration).

3.6.5 Multiple Conduits

Separate multiple conduits by a minimum distance of 3 inches, except that light and power conduits must be separated from control, signal, and telephone conduits by a minimum distance of 12 inches. Stagger the joints of the conduits by rows (horizontally) and layers (vertically) to strengthen the conduit assembly. Provide plastic duct spacers that interlock vertically and horizontally. Spacer assembly must consist of base spacers, intermediate spacers, ties, and locking device on top to provide a completely enclosed and locked-in conduit assembly. Install spacers per manufacturer's instructions, but provide a minimum of two spacer assemblies per 10 feet of conduit assembly.

3.6.6 Conduit Plugs and Pull Rope

New conduit indicated as being unused or empty must be provided with plugs on each end. Plugs must contain a weephole or screen to allow water drainage. Provide a plastic pull rope having 3 feet of slack at each end of unused or empty conduits.

3.6.7 Conduit and Duct Without Concrete Encasement

Depths to top of the conduit must be not less than 24 inches below finished grade. Provide not less than 3 inches clearance from the conduit to each side of the trench. Grade bottom of trench smooth; where rock, soft spots, or sharp-edged materials are encountered, excavate the bottom for an additional 3 inches, fill and tamp level with original bottom with sand or earth free from particles, that would be retained on a 1/4 inch sieve. The first 6 inch layer of backfill cover must be sand compacted as previously

specified. The rest of the excavation must be backfilled and compacted in 3 to 6 inch layers. Provide color, type and depth of warning tape as specified in Section 31 23 00.00 20 EXCAVATION AND FILL.

3.6.7.1 Encasement Under Roads and Structures

Under roads, paved areas, and railroad tracks, install conduits in concrete encasement of rectangular cross-section providing a minimum of 3 inch concrete cover around ducts. Reinforce ductbank as indicated. Concrete encasement must extend at least 5 feet beyond the edges of paved areas and roads. Depths to top of the concrete envelope must be not less than 24 inches below finished grade.

3.6.8 Duct Encased in Concrete

Construct underground duct lines of individual conduits encased in concrete. Depths to top of the concrete envelope must be not less than 18 inches below finished grade, except under roads and pavement, concrete envelope must be not less than 24 inches below finished grade. Do not mix different kinds of conduit in any one duct bank. Concrete encasement surrounding the bank must be rectangular in cross-section and must provide at least 3 inches of concrete cover for ducts. Separate conduits by a minimum concrete thickness of 3 inches. Before pouring concrete, anchor duct bank assemblies to prevent the assemblies from floating during concrete pouring. Anchoring must be done by driving reinforcing rods adjacent to duct spacer assemblies and attaching the rods to the spacer assembly. Provide color, type and depth of warning tape as specified in Section 31 23 00.00 20 EXCAVATION AND FILL.

3.6.8.1 Connections to Manholes

Duct bank envelopes connecting to underground structures must be flared to have enlarged cross-section at the manhole entrance to provide additional shear strength. Dimensions of the flared cross-section must be larger than the corresponding manhole opening dimensions by no less than 12 inches in each direction. Perimeter of the duct bank opening in the underground structure must be flared toward the inside or keyed to provide a positive interlock between the duct bank and the wall of the structure. Use vibrators when this portion of the encasement is poured to assure a seal between the envelope and the wall of the structure.

3.6.8.2 Connections to Existing Underground Structures

For duct bank connections to existing structures, break the structure wall out to the dimensions required and preserve steel in the structure wall. Cut steel and bend out to tie into the reinforcing of the duct bank envelope. Chip the perimeter surface of the duct bank opening to form a key or flared surface, providing a positive connection with the duct bank envelope.

3.6.8.3 Connections to Existing Concrete Pads

For duct bank connections to concrete pads, break an opening in the pad out to the dimensions required and preserve steel in pad. Cut the steel and bend out to tie into the reinforcing of the duct bank envelope. Chip out the opening in the pad to form a key for the duct bank envelope.

3.6.8.4 Connections to Existing Ducts

Where connections to existing duct banks are indicated, excavate the banks to the maximum depth necessary. Cut off the banks and remove loose concrete from the conduits before new concrete-encased ducts are installed. Provide a reinforced concrete collar, poured monolithically with the new duct bank, to take the shear at the joint of the duct banks. Remove existing cables which constitute interference with the work. Abandon in place those no longer used ducts and cables which do not interfere with the work.

3.6.8.5 Partially Completed Duct Banks

During construction wherever a construction joint is necessary in a duct bank, prevent debris such as mud and dirt from entering ducts by providing suitable conduit plugs. Fit concrete envelope of a partially completed duct bank with reinforcing steel extending a minimum of 2 feet back into the envelope and a minimum of 2 feet beyond the end of the envelope. Provide one No. 4 bar in each corner, 3 inches from the edge of the envelope. Secure corner bars with two No. 3 ties, spaced approximately one footapart. Restrain reinforcing assembly from moving during concrete pouring.

3.6.8.6 Removal of Ducts

Where duct lines are removed from existing underground structures, close the openings to waterproof the structure. Chip out the wall opening to provide a key for the new section of wall.

3.7 CABLE PULLING

Pull cables down grade with the feed-in point at the manhole or buildings of the highest elevation. Use flexible cable feeds to convey cables through manhole opening and into duct runs. Do not exceed the specified cable bending radii when installing cable under any conditions, including turnups into switches, transformers, switchgear, switchboards, and other enclosures. Cable with tape shield must have a bending radius not less than 12 times the overall diameter of the completed cable. If basket-grip type cable-pulling devices are used to pull cable in place, cut off the section of cable under the grip before splicing and terminating.

3.7.1 Cable Lubricants

Use lubricants that are specifically recommended by the cable manufacturer for assisting in pulling jacketed cables.

3.8 CABLES IN UNDERGROUND STRUCTURES

Do not install cables utilizing the shortest path between penetrations, but route along those walls providing the longest route and the maximum spare cable lengths. Form cables to closely parallel walls, not to interfere with duct entrances, and support on brackets and cable insulators. Support cable splices in underground structures by racks on each side of the splice. Locate splices to prevent cyclic bending in the spliced sheath. Install cables at middle and bottom of cable racks, leaving top space open for future cables, except as otherwise indicated for existing installations. Provide one spare three-insulator rack arm for each cable rack in each underground structure.

3.8.1 Cable Tag Installation

Install cable tags in each manhole as specified, including each splice. Tag wire and cable provided by this contract. Install cable tags over the fireproofing, if any, and locate the tags so that they are clearly visible without disturbing any cabling or wiring in the manholes.

3.9 CONDUCTORS INSTALLED IN PARALLEL

Conductors must be grouped such that each conduit of a parallel run contains 1 Phase A conductor, 1 Phase B conductor, 1 Phase C conductor, and 1 neutral conductor.

3.10 LOW VOLTAGE CABLE SPLICING AND TERMINATING

Make terminations and splices with materials and methods as indicated or specified herein and as designated by the written instructions of the manufacturer. Do not allow the cables to be moved until after the splicing material has completely set. Make splices in underground distribution systems only in accessible locations such as manholes, handholes, or aboveground termination pedestals.

3.11 MEDIUM VOLTAGE CABLE TERMINATIONS

Make terminations in accordance with the written instruction of the termination kit manufacturer.

3.12 MEDIUM VOLTAGE CABLE JOINTS

Provide power cable joints (splices) suitable for continuous immersion in water. Make joints only in accessible locations in manholes or handholes by using materials and methods in accordance with the written instructions of the joint kit manufacturer.

3.12.1 Joints in Shielded Cables

Cover the joined area with metallic tape, or material like the original cable shield and connect it to the cable shield on each side of the splice. Provide a bare copper ground connection brought out in a watertight manner and grounded to the manhole grounding loop as part of the splice installation. Ground conductors, connections, and rods must be as specified elsewhere in this section. Wire must be trained to the sides of the enclosure to prevent interference with the working area.

3.13 CABLE END CAPS

Cable ends must be sealed at all times with coated heat shrinkable end caps. Cables ends must be sealed when the cable is delivered to the job site, while the cable is stored and during installation of the cable. The caps must remain in place until the cable is spliced or terminated. Sealing compounds and tape are not acceptable substitutes for heat shrinkable end caps. Cable which is not sealed in the specified manner at all times will be rejected.

3.14 FIREPROOFING OF CABLES IN UNDERGROUND STRUCTURES

Fireproof (arc proof) wire and cables which will carry current at 2200 volts or more in underground structures.

3.14.1 Fireproofing Tape

Tightly wrap strips of fireproofing tape around each cable spirally in half-lapped wrapping. Install tape in accordance with manufacturer's instructions.

3.15 GROUNDING SYSTEMS

NFPA 70 and IEEE C2, except provide grounding systems with a resistance to solid earth ground not exceeding 25 ohms.

3.15.1 Grounding Electrodes

Installation of ground rods shall be in accordance with Section 26 20 00 INTERIOR DISTRIBUTION SYSTEM.

3.15.2 Grounding Connections

Make grounding connections which are buried or otherwise normally inaccessible, by compression connector.

a. Make compression connections using a hydraulic compression tool to provide the correct circumferential pressure. Tools and dies must be as recommended by the manufacturer. An embossing die code or other standard method must provide visible indication that a connector has been adequately compressed on the ground wire.

3.15.3 Grounding Conductors

Provide bare grounding conductors, except where installed in conduit with associated phase conductors. Ground cable sheaths, cable shields, conduit, and equipment with No. 6 AWG. Ground other noncurrent-carrying metal parts and equipment frames of metal-enclosed equipment. Ground metallic frames and covers of handholes and pull boxes with a braided, copper ground strap with equivalent ampacity of No. 6 AWG.

3.15.4 Ground Cable Crossing Expansion Joints

Protect ground cables crossing expansion joints or similar separations in structures and pavements by use of approved devices or methods of installation which provide the necessary slack in the cable across the joint to permit movement. Use stranded or other approved flexible copper cable across such separations.

3.15.5 Manhole Grounding

Loop a 4/0 AWG grounding conductor around the interior perimeter, approximately 12 inches above finished floor. Secure the conductor to the manhole walls at intervals not exceeding 36 inches. Connect the conductor to the manhole grounding electrode with 4/0 AWG conductor. Connect all incoming 4/0 grounding conductors to the ground loop adjacent to the point of entry into the manhole. Bond the ground loop to all cable shields, metal cable racks, and other metal equipment with a minimum 6 AWG conductor.

3.16 EXCAVATING, BACKFILLING, AND COMPACTING

Provide in accordance with NFPA 70 and Section 31 23 00.00 20 EXCAVATION AND FILL.

3.16.1 Reconditioning of Surfaces

3.16.1.1 Unpaved Surfaces

Restore to their original elevation and condition unpaved surfaces disturbed during installation of duct or direct burial cable. Preserve sod and topsoil removed during excavation and reinstall after backfilling is completed. Replace sod that is damaged by sod of quality equal to that removed. When the surface is disturbed in a newly seeded area, re-seed the restored surface with the same quantity and formula of seed as that used in the original seeding, and provide topsoiling, fertilizing, liming, seeding, sodding, sprigging, or mulching.

3.16.1.2 Paving Repairs

Where trenches, pits, or other excavations are made in existing roadways and other areas of pavement where surface treatment of any kind exists, restore such surface treatment or pavement the same thickness and in the same kind as previously existed, except as otherwise specified, and to match and tie into the adjacent and surrounding existing surfaces.

3.17 CAST-IN-PLACE CONCRETE

Provide concrete in accordance with Section 03 30 00 CAST-IN-PLACE CONCRETE.

3.17.1 Concrete Slabs for Equipment

Unless otherwise indicated, the slab must be at least 8 inches thick, reinforced with a 6 by 6 - W2.9 by W2.9 mesh, placed uniformly 4 inches from the top of the slab. Slab must be placed on a 6 inch thick, well-compacted gravel base. Top of concrete slab must be approximately 4 inches above finished grade with gradual slope for drainage. Edges above grade must have 1/2 inch chamfer. Slab must be of adequate size to project at least 8 inches beyond the equipment.

Stub up conduits, with bushings, 2 inches into cable wells in the concrete pad. Coordinate dimensions of cable wells with transformer cable training areas.

3.17.2 Sealing

When the installation is complete, seal all conduit and other entries into the equipment enclosure with an approved sealing compound. Seals must be of sufficient strength and durability to protect all energized live parts of the equipment from rodents, insects, or other foreign matter.

3.18 FIELD QUALITY CONTROL

3.18.1 Performance of Field Acceptance Checks and Tests

Perform in accordance with the manufacturer's recommendations, and include the following visual and mechanical inspections and electrical tests, performed in accordance with NETA ATS.

3.18.1.1 Medium Voltage Cables

Perform tests after installation of cable, splices, and terminators and before terminating to equipment or splicing to existing circuits.

a. Visual and Mechanical Inspection

(1) Inspect exposed cable sections for physical damage.

(2) Verify that cable is supplied and connected in accordance with contract plans and specifications.

(3) Inspect for proper shield grounding, cable support, and cable termination.

(4) Verify that cable bends are not less than ICEA or manufacturer's minimum allowable bending radius.

(5) Inspect for proper fireproofing.

(6) Visually inspect jacket and insulation condition.

(7) Inspect for proper phase identification and arrangement.

b. Electrical Tests

(1) Perform a shield continuity test on each power cable by ohmmeter method. Record ohmic value, resistance values in excess of 10 ohms per 1000 feet of cable must be investigated and justified.

(2) Perform acceptance test on new cables before the new cables are connected to existing cables and placed into service, including terminations and joints. Perform maintenance test on complete cable system after the new cables are connected to existing cables and placed into service, including existing cable, terminations, and joints. Tests must be very low frequency (VLF) alternating voltage withstand tests in accordance with IEEE 400.2. VLF test frequency must be 0.05 Hz minimum for a duration of 60 minutes using a sinusoidal waveform. Test voltages must be as follows:

CABLE RATING AC TEST VOLTAGE for ACCEPTANCE TESTING	
5 kV	10kV rms(peak)
8 kV	13kV rms(peak)
15 kV	20kV rms(peak)
25 kV	31kV rms(peak)
35 kV	44kV rms(peak)

CABLE RATING AC TEST VOLTAGE for MAINTENANCE TESTING	
5 kV	7kV rms(peak)
8 kV	10kV rms(peak)

CABLE RATING AC TEST VOLTAGE for MAINTENANCE TESTING	
15 kV	16kV rms(peak)
25 kV	23kV rms(peak)
35 kV	33kV rms(peak)

3.18.1.2 Low Voltage Cables, 600-Volt

Perform tests after installation of cable, splices and terminations and before terminating to equipment or splicing to existing circuits.

a. Visual and Mechanical Inspection

(1) Inspect exposed cable sections for physical damage.

(2) Verify that cable is supplied and connected in accordance with contract plans and specifications.

(3) Verify tightness of accessible bolted electrical connections.

(4) Inspect compression-applied connectors for correct cable match and indentation.

(5) Visually inspect jacket and insulation condition.

(6) Inspect for proper phase identification and arrangement.

b. Electrical Tests

(1) Perform insulation resistance tests on wiring No. 6 AWG and larger diameter using instrument which applies voltage of approximately 1000 volts dc for one minute.

(2) Perform continuity tests to insure correct cable connection.

3.18.1.3 Grounding System

a. Visual and mechanical inspection

Inspect ground system for compliance with contract plans and specifications

b. Electrical tests

Perform ground-impedance measurements utilizing the fall-of-potential method in accordance with IEEE 81. On systems consisting of interconnected ground rods, perform tests after interconnections are complete. On systems consisting of a single ground rod perform tests before any wire is connected. Take measurements in normally dry weather, not less than 48 hours after rainfall. Use a portable megohmmeter tester in accordance with manufacturer's instructions to test each ground or group of grounds. The instrument must be equipped with a meter reading directly in ohms or fractions thereof to indicate the ground value of the ground rod or grounding systems under test.

3.18.2 Follow-Up Verification

Upon completion of acceptance checks and tests, show by demonstration in service that circuits and devices are in good operating condition and properly performing the intended function. As an exception to requirements stated elsewhere in the contract, the Contracting Officer must be given 5 working days advance notice of the dates and times of checking and testing.

-- End of Section --