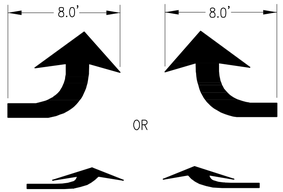

TURN ARROWS (D1)
NTS

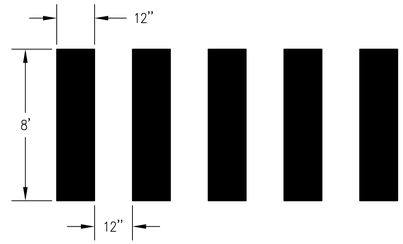

CROSSWALK (D2)
NTS CP101, CP102, CP103, CP104

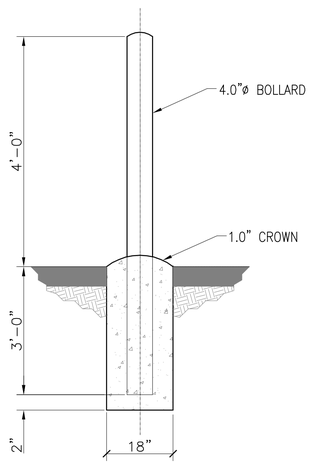

PERMANENT BOLLARD (B2)
NTS

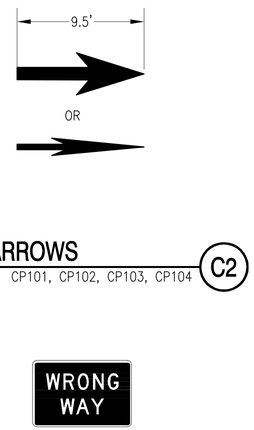

TRAFFIC ARROWS (C2)
NTS CP101, CP102, CP103, CP104

WRONG WAY SIGN (B3)
NTS CP104

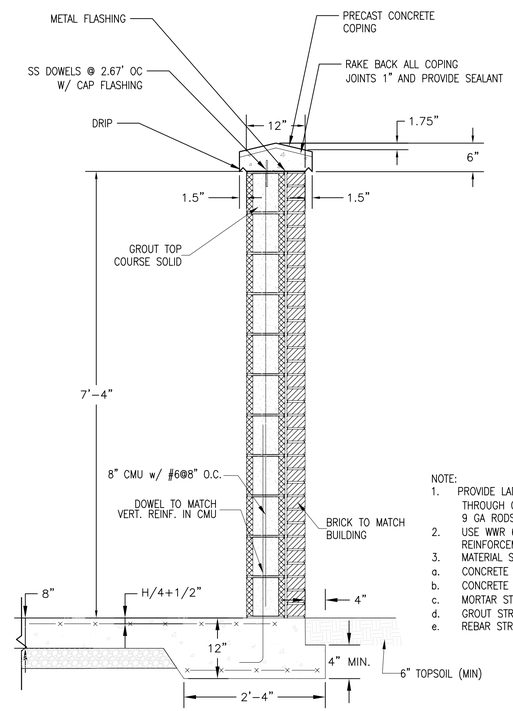

NOTE:
1. PROVIDE LADDER REINFORCING EXTENDING THROUGH CMU AND BRICK @ 16" USING 9 GA RODS.
2. USE WWR 6"X6" W2.5XW2.5 FOR SLAB REINFORCEMENT
3. MATERIAL STRENGTHS
a. CONCRETE FOR SLAB ON GRADE: f'c = 5,000 psi
b. CONCRETE FOR FOOTING: f'c = 3,000 psi
c. MORTAR STRENGTH: f'm = 1,500 psi
d. GROUT STRENGTH: f'c = 2,000 psi
e. REBAR STRENGTH: fy = 60,000 psi

DUMPSTER PAD WALL (B4)
NTS CP104

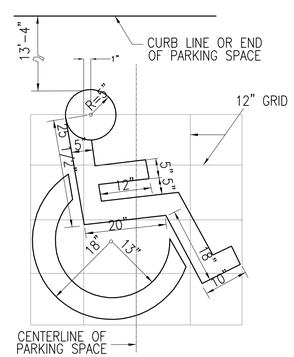

ABA PAVEMENT MARKING SYMBOL (A2)
NTS CP101, CP104

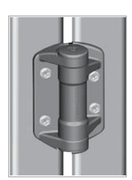

GATE HINGE DETAIL
SCALE: NTS

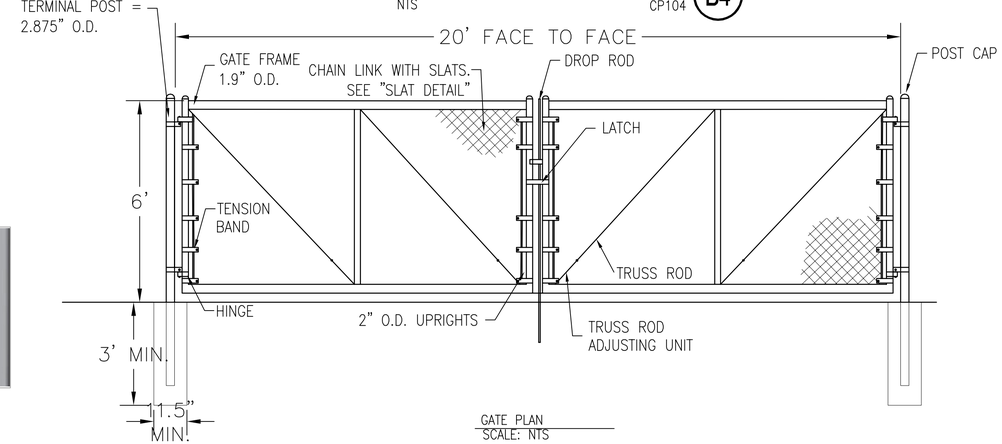

GATE PLAN
SCALE: NTS

NOTES:
1. THE POSTS, GATES, CHAIN LINK, AND HARDWARE SHALL BE BLACK VINYL COATED.
2. USE MERCHANT METALS TYPICAL DOUBLE SWING GATE OR AN APPROVED EQUAL.

DUMPSTER ACCESS GATE (A5)
SCALE: NTS CP102

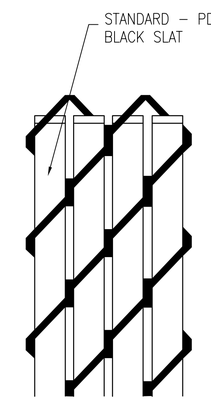

SLAT DETAIL
SCALE: NTS

SYM	DESCRIPTION	DATE	APPR
	SIGNATURE SUBMITTAL	6/10/2014	

NAVFAC

COMMONWEALTH OF VIRGINIA
JON-MICHAEL C. LEMON
Lic. No. 041993
06/10/2014
PROFESSIONAL ENGINEER
SEAL

PARSONS BRINCKERHOFF
engineering
architecture
277 Bendix Road
Suite 300
Virginia Beach, Virginia
23452
Phone: 757.466.1732
Fax: 757.466.1493

AE LOGO

APPROVED
FOR COMMANDER NAVFAC
ACTIVITY
SATISFACTORY TO DATE

DES KC	DRW KC	CHK JL
PM		MMP
BRANCH MANAGER		BDB
CHIEF ENG/ARCH		RLJ/CRB
FIRE PROTECTION		DAS

DEPARTMENT OF THE NAVY
NAVAL FACILITIES ENGINEERING COMMAND
NAVAL FACILITIES ENGINEERING COMMAND ~ MID-ATLANTIC
HAMPTON ROADS IPT
NAVAL STATION – NORFOLK, VIRGINIA
NAVAL WEAPONS STATION
YORKTOWN, VIRGINIA
P-984 REGIMENTAL HEADQUARTERS
SIGNAGE & STRIPING DETAILS

SCALE: AS NOTED
EPROJECT NO. 1113910
CONSTR. CONTR. NO. N40085-08-D-9739
NAVFAC DRAWING NO. 12664791
SHEET OF
CP511

DRAWFORM REVISION: 6 AUG 2007

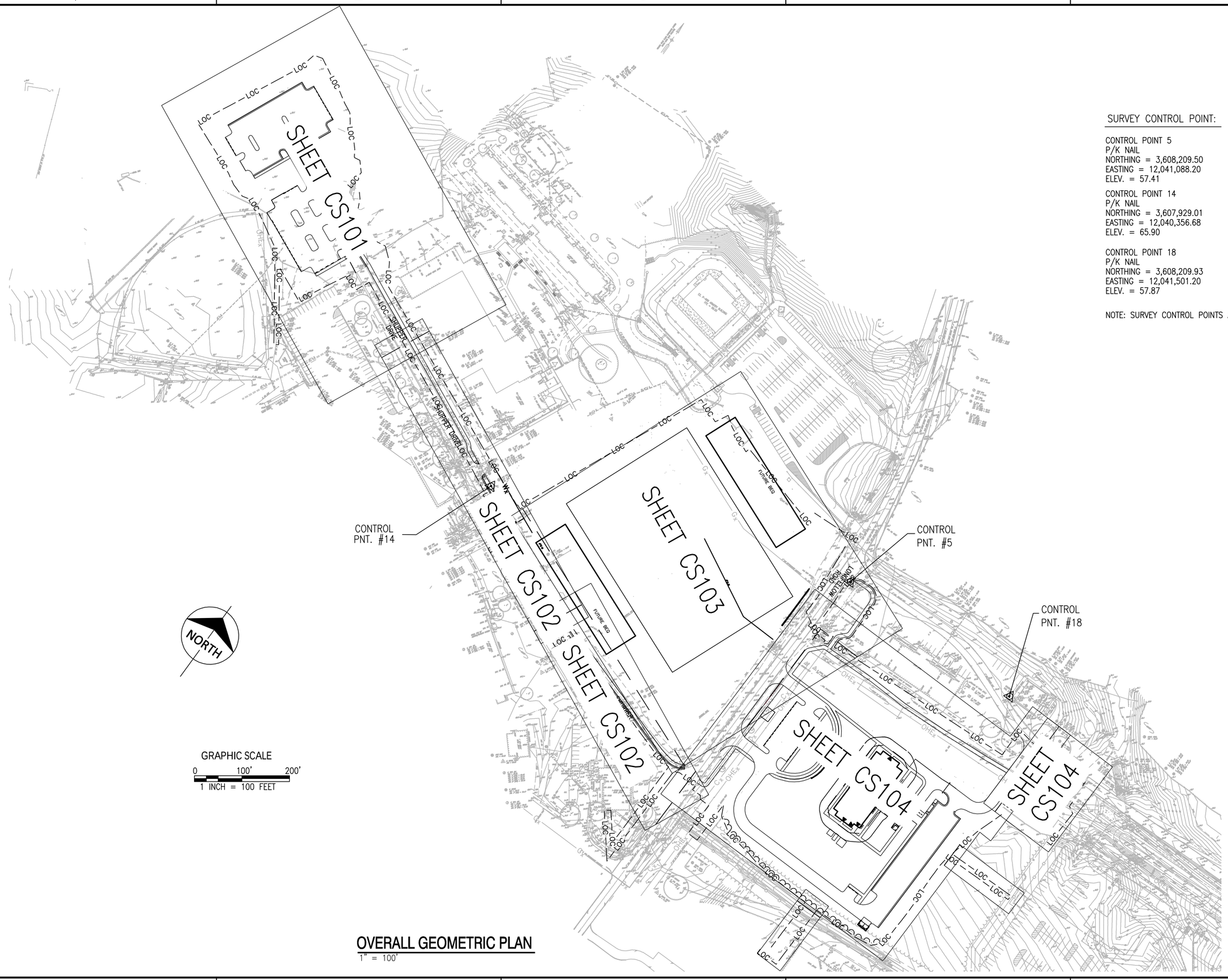

SURVEY CONTROL POINT:

CONTROL POINT 5
P/K NAIL
NORTHING = 3,608,209.50
EASTING = 12,041,088.20
ELEV. = 57.41

CONTROL POINT 14
P/K NAIL
NORTHING = 3,607,929.01
EASTING = 12,040,356.68
ELEV. = 65.90

CONTROL POINT 18
P/K NAIL
NORTHING = 3,608,209.93
EASTING = 12,041,501.20
ELEV. = 57.87

NOTE: SURVEY CONTROL POINTS ARE PROVIDED BY NAVFAC

OVERALL GEOMETRIC PLAN

1" = 100'

SYM	DESCRIPTION	DATE	APPR
	SIGNATURE SUBMITTAL	6/10/2014	

NAVFAC

COMMONWEALTH OF VIRGINIA
JON-MICHAEL C. LEMON
Lic. No. 041993
06/10/2014
PROFESSIONAL ENGINEER
SEAL

PARSONS BRINCKERHOFF
engineering
architecture
277 Bendix Road
Suite 300
Virginia Beach, Virginia
23452
Phone: 757.466.1732
Fax: 757.466.1493

AE LOGO

APPROVED

FOR COMMANDER NAVFAC

ACTIVITY

SATISFACTORY TO DATE

DES	CL	DRW CL	CHK JL
PM	MMP		
BRANCH MANAGER	BDB		
CHIEF ENG/ARCH	RLJ/CRB		
FIRE PROTECTION	DAS		

DEPARTMENT OF THE NAVY
NAVAL FACILITIES ENGINEERING COMMAND
HAMPTON ROADS IPT
NAVAL FACILITIES ENGINEERING COMMAND ~ MID-ATLANTIC
NAVAL STATION ~ NORFOLK, VIRGINIA
NAVAL WEAPONS STATION
YORKTOWN, VIRGINIA
P-984 REGIMENTAL HEADQUARTERS
OVERALL GEOMETRIC PLAN

SCALE: AS NOTED
EPROJECT NO. 1113910
CONSTR. CONTR. NO. N40085-08-D-9739
NAVFAC DRAWING NO. 12664792
SHEET OF
CS100

DRAWFORM REVISION: 6 AUG 2007

NOTES:

ALL COORDINATES FOR THE PARKING LOT ARE AT THE FACE OF CURB.

POINT TABLE		
POINT #	NORTHING	EASTING
C1	3608220.4382	12039461.6275
C2	3608384.7554	12039535.1113
C3	3608335.7662	12039644.6560
C4	3608278.2660	12039618.9124
C5	3608230.8056	12039597.6637
C6	3608165.0604	12039568.3111
C7	3608203.6958	12039654.5394
C8	3608146.1956	12039628.7958
C9	3608074.0134	12039793.6957
C10	3608131.5136	12039819.4393

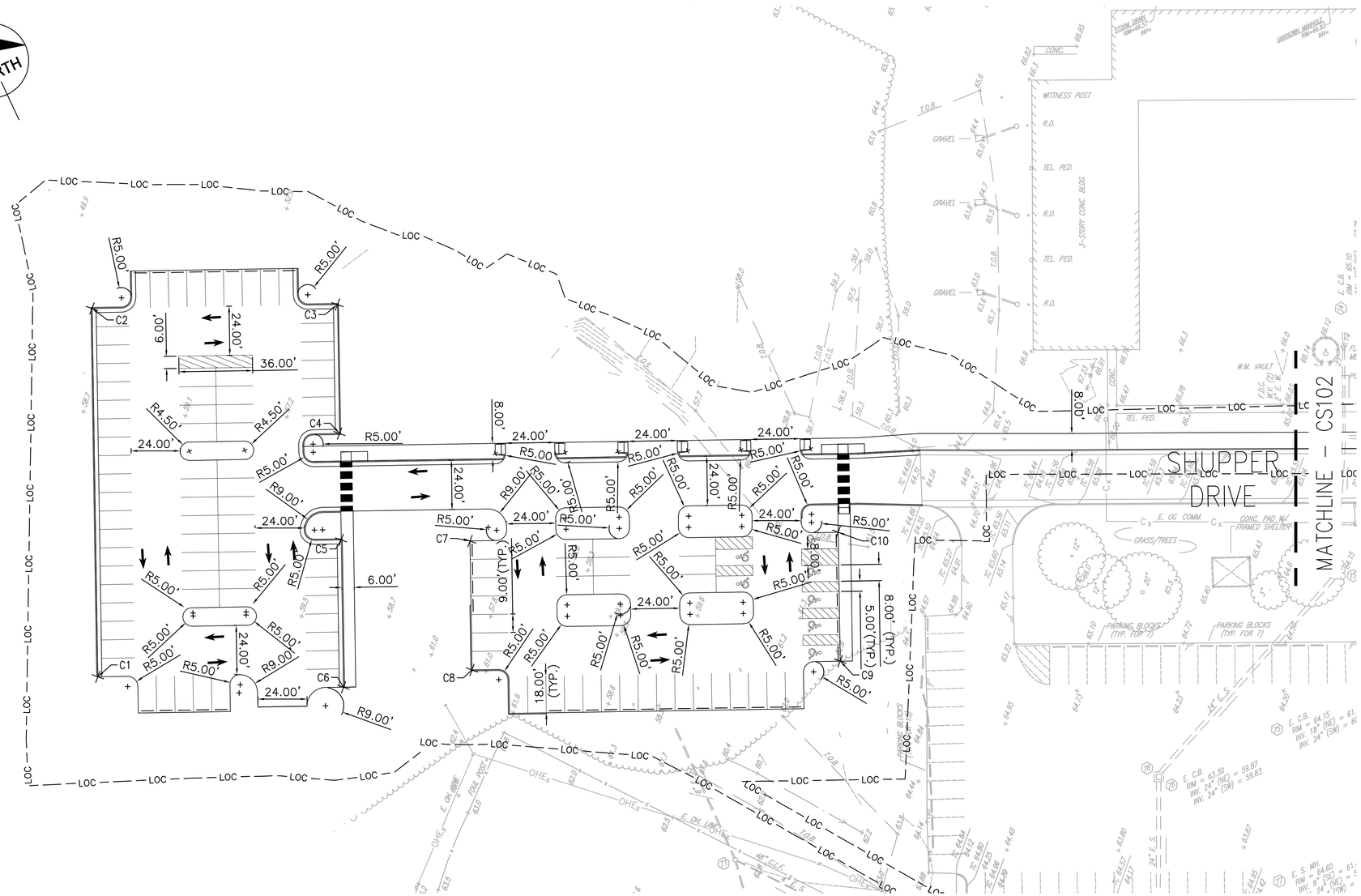

GEOMETRIC PLAN - PARKING

1" = 30'

GRAPHIC SCALE

0 30' 60'

1 INCH = 30 FEET

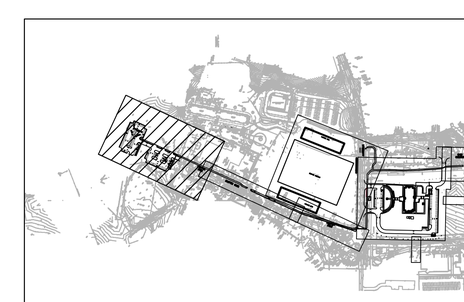

SYM	DESCRIPTION	DATE	APPR
	SIGNATURE SUBMITTAL	6/10/2014	

NAVFAC

COMMONWEALTH OF VIRGINIA
JON-MICHAEL C. LEMON
Lic. No. 041993
06/10/2014
PROFESSIONAL ENGINEER
SEAL

PARSONS BRINCKERHOFF
engineering
architecture
277 Bendix Road
Suite 300
Virginia Beach, Virginia
23452
Phone: 757.466.1732
Fax: 757.466.1493
AE LOGO

APPROVED

FOR COMMANDER NAVFAC

ACTIVITY

SATISFACTORY TO DATE

DES	CL	DRW CL	CHK JL
PM	MMP		
BRANCH MANAGER	BDB		
CHIEF ENG/ARCH	RLJ/CRB		
FIRE PROTECTION	DAS		

DEPARTMENT OF THE NAVY
NAVAL FACILITIES ENGINEERING COMMAND
HAMPTON ROADS IPT
NAVAL FACILITIES ENGINEERING COMMAND – MID-ATLANTIC
NAVAL STATION – NORFOLK, VIRGINIA
NAVAL WEAPONS STATION YORKTOWN, VIRGINIA

P-984 REGIMENTAL HEADQUARTERS

GEOMETRIC PLAN – PARKING

SCALE: AS NOTED

EPROJECT NO. 1113910

CONSTR. CONTR. NO. N40085-08-D-9739

NAVFAC DRAWING NO. 12664793

SHEET OF

CS101

DRAWFORM REVISION: 6 AUG 2007

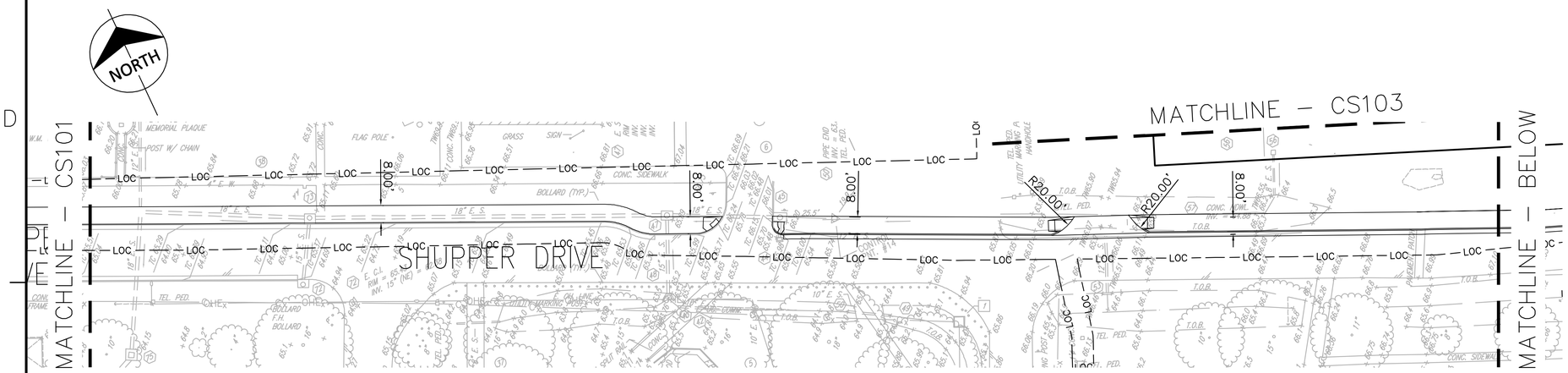

GEOMETRIC PLAN - SIDEWALK 1

1" = 30'

GRAPHIC SCALE

0 30' 60'

1 INCH = 30 FEET

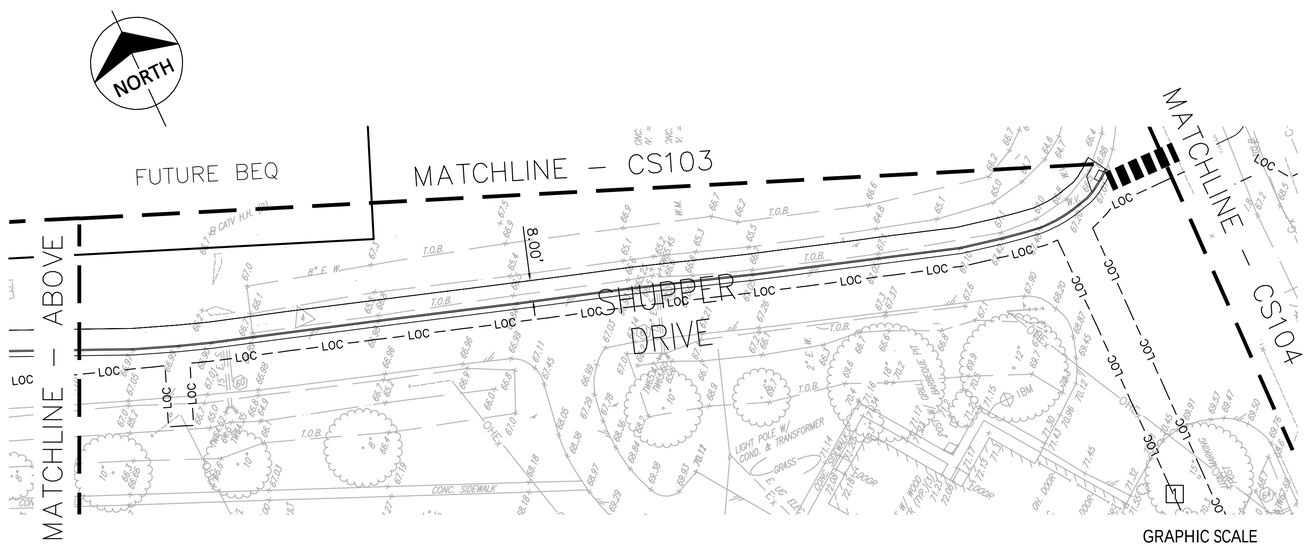

GEOMETRIC PLAN - SIDEWALK 2

1" = 30'

GRAPHIC SCALE

0 30' 60'

1 INCH = 30 FEET

NOTES

1 SEE SITE ELECTRICAL PLANS FOR PROPOSED COMMUNICATION UTILITY WORK ON SOUTH SIDE OF SHUPPER DRIVE.

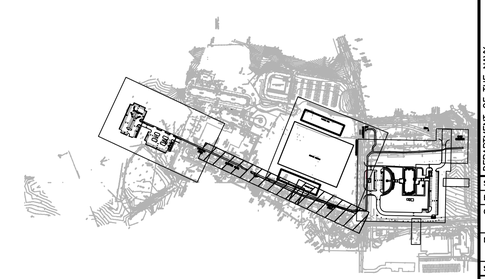

SYM	DESCRIPTION	DATE	APPR
	SIGNATURE SUBMITTAL	6/10/2014	

NAVFAC

COMMONWEALTH OF VIRGINIA
JON-MICHAEL C. LEMON
Lic. No. 041993
06/10/2014
PROFESSIONAL ENGINEER
SEAL

PARSONS BRINCKERHOFF
engineering
architecture
277 Bendix Road
Suite 300
Virginia Beach, Virginia
23452
Phone: 757.466.1732
Fax: 757.466.1493

AE LOGO

APPROVED

FOR COMMANDER NAVFAC

ACTIVITY

SATISFACTORY TO DATE

DES	CL	DRW CL	CHK JL
PM	MMP		
BRANCH MANAGER	BDB		
CHIEF ENG/ARCH	RLJ/CRB		
FIRE PROTECTION	DAS		

DEPARTMENT OF THE NAVY
NAVAL FACILITIES ENGINEERING COMMAND
HAMPTON ROADS IPT

NAVAL FACILITIES ENGINEERING COMMAND – MID-ATLANTIC
NAVAL STATION – NORFOLK, VIRGINIA

NAVAL WEAPONS STATION
YORKTOWN, VIRGINIA

P-984 REGIMENTAL HEADQUARTERS

GEOMETRIC PLAN – SIDEWALK

SCALE: AS NOTED

EPROJECT NO. 1113910

CONSTR. CONTR. NO. N40085-08-D-9739

NAVFAC DRAWING NO. 12664794

SHEET OF

CS102

DRAWFORM REVISION: 6 AUG 2007

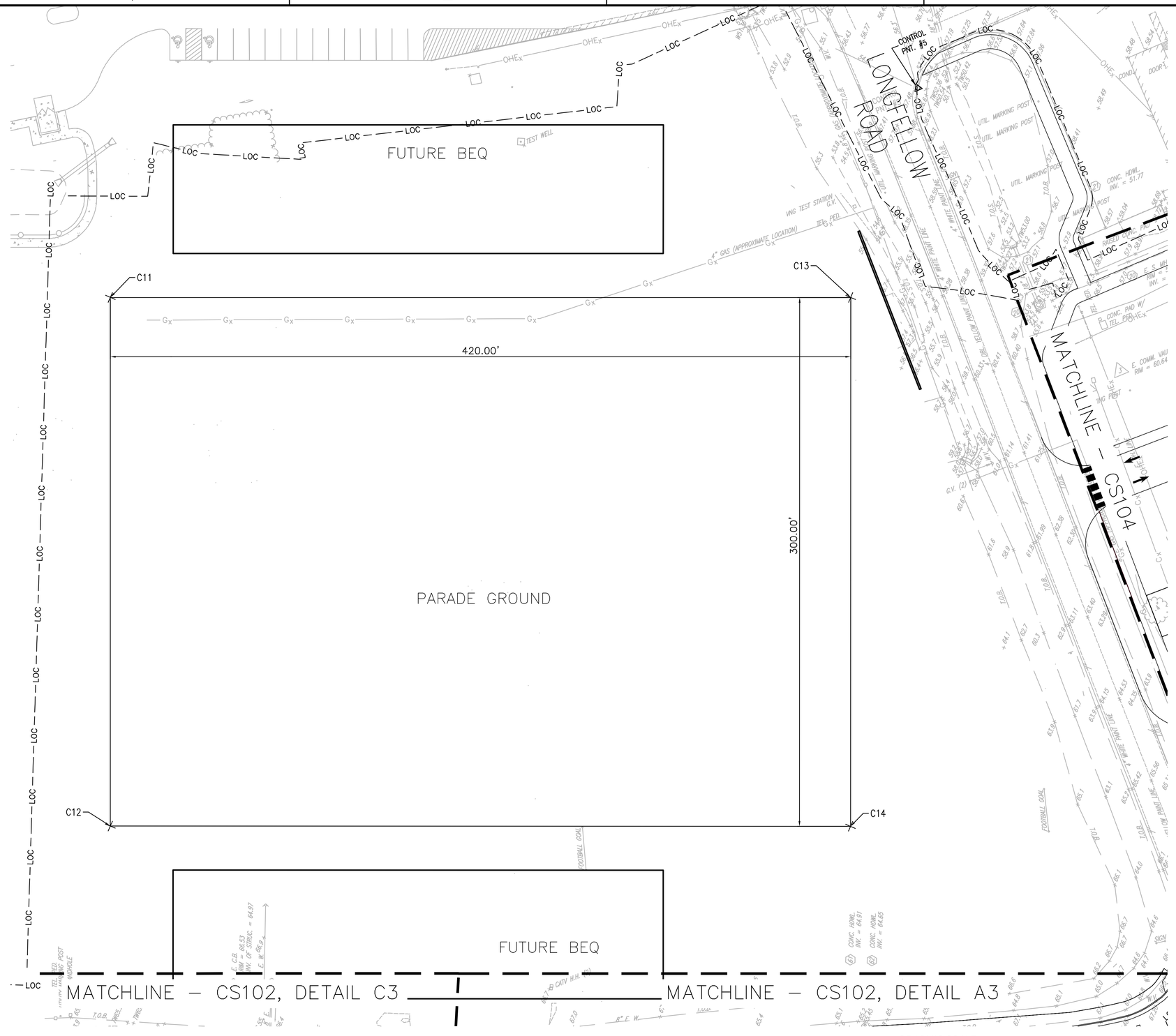

GEOMETRIC PLAN - PARADE GROUND

1" = 30'

POINT TABLE		
POINT #	NORTHING	EASTING
C11	3608270.3630	12040618.8892
C12	3607992.0987	12040506.7777
C13	3608113.3850	12041008.4551
C14	3607835.0503	12040896.2363

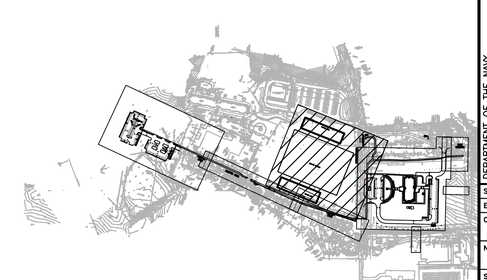

SYM	DESCRIPTION	DATE	APPR
	SIGNATURE SUBMITTAL	6/10/2014	

NAVFAC

COMMONWEALTH OF VIRGINIA
JON-MICHAEL C. LEMON
Lic. No. 041993
06/10/2014
PROFESSIONAL ENGINEER
SEAL

PARSONS BRINCKERHOFF
engineering
architecture
277 Bendix Road
Suite 300
Virginia Beach, Virginia
23452
Phone: 757.466.1732
Fax: 757.466.1493

AE LOGO

APPROVED

FOR COMMANDER NAVFAC

ACTIVITY

SATISFACTORY TO DATE

DES CL	DRW CL	CHK JL
PM	MMP	
BRANCH MANAGER	BDB	
CHIEF ENG/ARCH	RLJ/CRB	
FIRE PROTECTION	DAS	

DEPARTMENT OF THE NAVY
NAVAL FACILITIES ENGINEERING COMMAND
NAVAL FACILITIES ENGINEERING COMMAND ~ MID-ATLANTIC
NAVAL STATION – NORFOLK, VIRGINIA
HAMPTON ROADS IPT
NAVAL WEAPONS STATION
YORKTOWN, VIRGINIA

P-984 REGIMENTAL HEADQUARTERS

GEOMETRIC PLAN – PARADE GROUND

SCALE: AS NOTED
EPROJECT NO. 1113910
CONSTR. CONTR. NO. N40085-08-D-9739
NAVFAC DRAWING NO. 12664795
SHEET OF
CS103

DRAWFORM REVISION: 6 AUG 2007

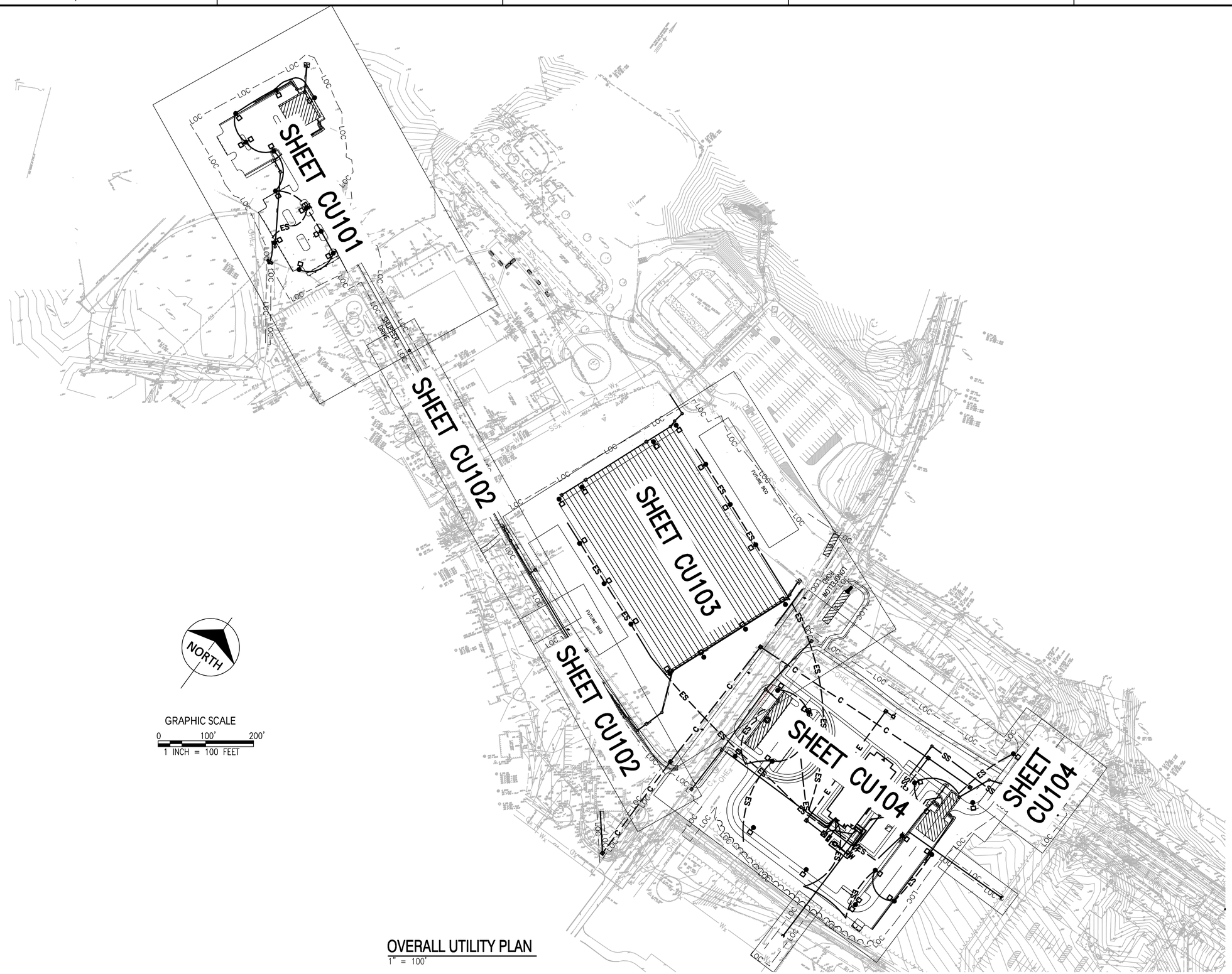

OVERALL UTILITY PLAN
1" = 100'

SYM	DESCRIPTION	DATE	APPR
	SIGNATURE SUBMITTAL	6/10/2014	

NAVFAC

COMMONWEALTH OF VIRGINIA
JON-MICHAEL C. LEMON
Lic. No. 041993
06/10/2014
PROFESSIONAL ENGINEER
SEAL

PARSONS BRINCKERHOFF
engineering
architecture
277 Bendix Road
Suite 300
Virginia Beach, Virginia
23452
Phone: 757.466.1732
Fax: 757.466.1493
AE LOGO

APPROVED
FOR COMMANDER NAVFAC
ACTIVITY
SATISFACTORY TO DATE

DES TC	DRW TC	CHK JL	
PM	MMP		
BRANCH MANAGER	BDB		
CHIEF ENG/ARCH	RLJ/CRB		
FIRE PROTECTION	DAS		

DEPARTMENT OF THE NAVY
NAVAL FACILITIES ENGINEERING COMMAND
HAMPTON ROADS IPT
NAVAL FACILITIES ENGINEERING COMMAND ~ MID-ATLANTIC
NAVAL STATION ~ NORFOLK, VIRGINIA
NAVAL WEAPONS STATION
YORKTOWN, VIRGINIA
P-984 REGIMENTAL HEADQUARTERS
OVERALL UTILITY PLAN

SCALE: AS NOTED
EPROJECT NO. 1113910
CONSTR. CONTR. NO. N40085-08-D-9739
NAVFAC DRAWING NO. 12664797
SHEET OF
CU100

DRAWFORM REVISION: 6 AUG 2007

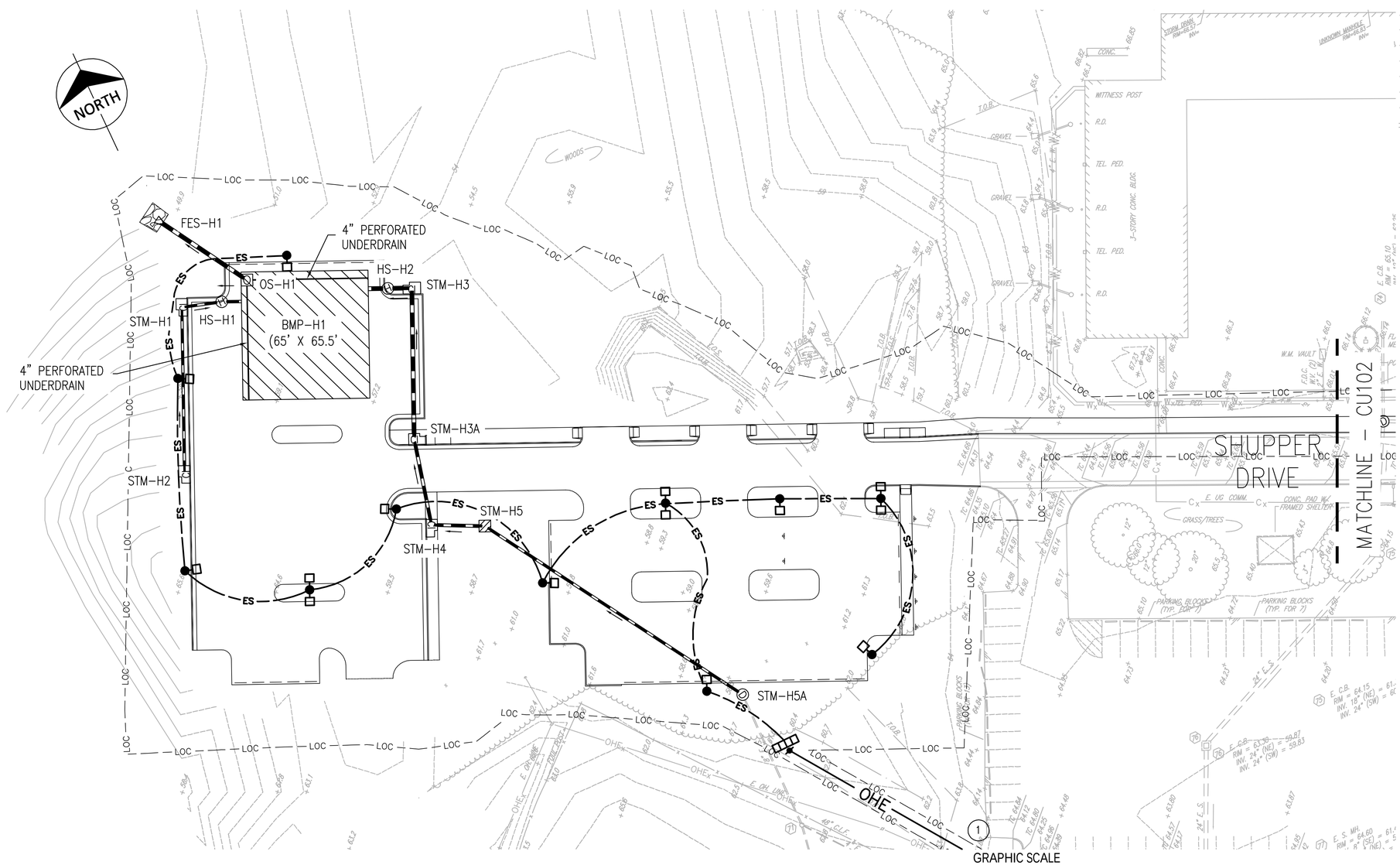

UTILITY PLAN - PARKING

1" = 30'

UTILITY LEGEND

EXISTING	PROPOSED	
C_x	C	COMMUNICATIONS UNDERGROUND
E_x	E	PRIMARY ELECTRIC UNDERGROUND
ES_x	ES	SECONDARY ELECTRIC UNDERGROUND
OHE_x	OHE	OVERHEAD ELECTRIC
G_x	G	GAS LINE
SS_x	SS	SANITARY LINE
W_x	W	WATER LINE
		STORM LINE
	SD	FOUNDATION DRAINAGE SYSTEM
	RW	COOLING TOWER RETURN WATER
	SW	COOLING TOWER SUPPLY WATER

- STORM GRATE INLET SEE DETAIL A2 ON SHEET CU511
- CI — STORM CURB INLET ON GRADE SEE DETAIL A2 ON SHEET CU513
- CI — STORM CURB INLET AT SAG SEE DETAIL A2 ON SHEET CU513
- ELEC/COMM MANHOLE/HANDHOLE SEE SHEET CU531
- TRANSFORMER
- GENERATOR
- CLOSED CIRCUIT COOLER
- SWITCHGEAR
- LIGHT POLE
- ELECTRICAL POLE
- FIRE DEPARTMENT CONNECTION SEE DETAIL B5 ON SHEET CU501
- FIRE HYDRANT SEE DETAIL A5 ON SHEET CU501
- WATER VALVE SEE DETAIL D1 ON SHEET CU501
- POST INDICATOR VALVE SEE DETAIL C3 ON SHEET CU501
- S — SANITARY MANHOLE SEE DETAIL A4 ON SHEET CU521
- CO — CLEANOUT SEE DETAIL B3 ON SHEET CU512
- D — STORM MANHOLE SEE DETAIL A5, B5 ON SHEET CU511
- BMP SEE SHEET CU514 AND CU515
- END SECTION SEE DETAIL A2 ON SHEET CU512
- OUTLET STRUCTURE SEE DETAIL A2 ON SHEET CU514
- H — HYDRODYNAMIC SEPARATOR SEE DETAIL A5 ON SHEET CU514

KEYNOTES

1. SEE SITE ELECTRICAL PLANS FOR CONTINUATION OF THE PROPOSED ELECTRIC UTILITY.

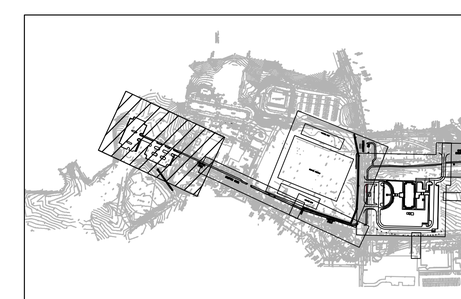

SYM	DESCRIPTION	DATE	APPR
	SIGNATURE SUBMITTAL	6/10/2014	

NAVFAC

COMMONWEALTH OF VIRGINIA
JON-MICHAEL C. LEMON
Lic. No. 041993
06/10/2014
PROFESSIONAL ENGINEER
SEAL

PARSONS BRINCKERHOFF
engineering
architecture
277 Bendix Road
Suite 300
Virginia Beach, Virginia
23452
Phone: 757.466.1732
Fax: 757.466.1493

AE LOGO

APPROVED

FOR COMMANDER NAVFAC

ACTIVITY

SATISFACTORY TO DATE

DES	TC	DRW TC	CHK JL
PM	MMP		
BRANCH MANAGER	BDB		
CHIEF ENG/ARCH	RLJ/CRB		
FIRE PROTECTION	DAS		

DEPARTMENT OF THE NAVY
NAVAL FACILITIES ENGINEERING COMMAND
HAMPTON ROADS IPT
NAVAL FACILITIES ENGINEERING COMMAND ~ MID-ATLANTIC
NAVAL STATION ~ NORFOLK, VIRGINIA
NAVAL WEAPONS STATION YORKTOWN, VIRGINIA

P-984 REGIMENTAL HEADQUARTERS

UTILITY PLAN – PARKING

SCALE: AS NOTED
EPROJECT NO. 1113910
CONSTR. CONTR. NO. N40085-08-D-9739
NAVFAC DRAWING NO. 12664798
SHEET OF
CU101

DRAWFORM REVISION: 6 AUG 2007

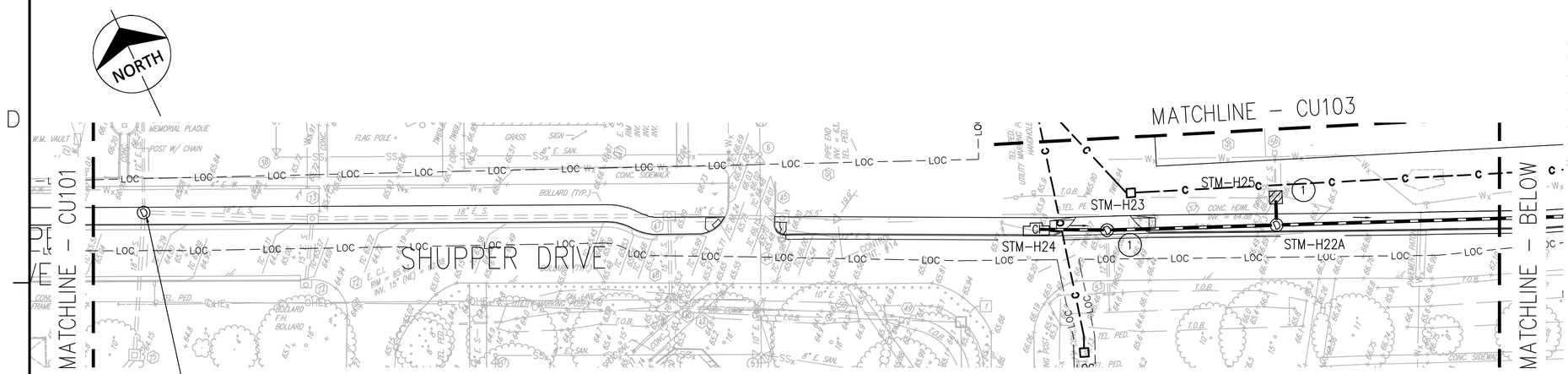

UTILITY PLAN - SIDEWALK 1

1" = 30'

GRAPHIC SCALE

0 30' 60'

1 INCH = 30 FEET

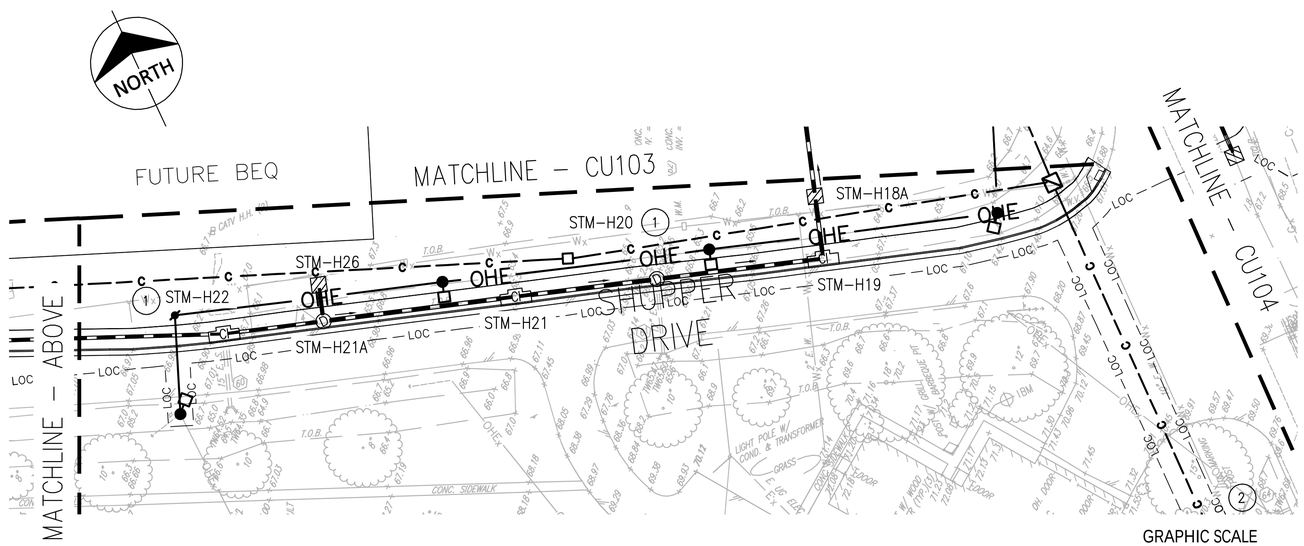

UTILITY PLAN - SIDEWALK 2

1" = 30'

GRAPHIC SCALE

0 30' 60'

1 INCH = 30 FEET

UTILITY LEGEND

EXISTING	PROPOSED	
C_x	C	COMMUNICATIONS UNDERGROUND
E_x	E	PRIMARY ELECTRIC UNDERGROUND
ES_x	ES	SECONDARY ELECTRIC UNDERGROUND
OHE_x	OHE	OVERHEAD ELECTRIC
G_x	G	GAS LINE
SS_x	SS	SANITARY LINE
W_x	W	WATER LINE
		STORM LINE
	SD	FOUNDATION DRAINAGE SYSTEM
	RW	COOLING TOWER RETURN WATER
	SW	COOLING TOWER SUPPLY WATER
		STORM GRATE INLET SEE DETAIL A2 ON SHEET CU511
	CI	STORM CURB INLET ON GRADE SEE DETAIL A2 ON SHEET CU513
	CI	STORM CURB INLET AT SAG SEE DETAIL A2 ON SHEET CU513
		ELEC/COMM MANHOLE/HANDHOLE SEE SHEET CU531
		TRANSFORMER
		GENERATOR
		CLOSED CIRCUIT COOLER
		SWITCHGEAR
		LIGHT POLE
		ELECTRICAL POLE
		FIRE DEPARTMENT CONNECTION SEE DETAIL B5 ON SHEET CU501
		FIRE HYDRANT SEE DETAIL A5 ON SHEET CU501
		WATER VALVE SEE DETAIL D1 ON SHEET CU501
		POST INDICATOR VALVE SEE DETAIL C3 ON SHEET CU501
S	S	SANITARY MANHOLE SEE DETAIL A4 ON SHEET CU521
	CO	CLEANOUT SEE DETAIL B3 ON SHEET CU512
D	D	STORM MANHOLE SEE DETAIL A5, B5 ON SHEET CU511
		BMP SEE SHEET CU514 AND CU515
		END SECTION SEE DETAIL A2 ON SHEET CU512
		OUTLET STRUCTURE SEE DETAIL A2 ON SHEET CU514
	H	HYDRODYNAMIC SEPARATOR SEE DETAIL A5 ON SHEET CU514

KEYNOTES

1. CONNECT EXISTING STORM SYSTEM INTO THE PROPOSED STORM STRUCTURE
2. SEE SITE ELECTRICAL PLANS FOR PROPOSED COMMUNICATION UTILITY WORK ON SOUTH SIDE OF SHUPPER DRIVE.

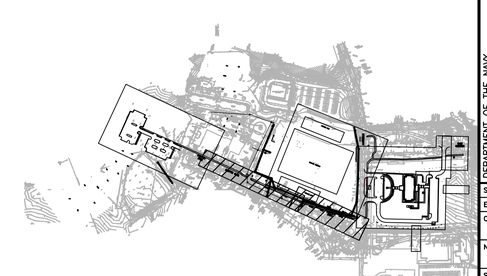

SYM	DESCRIPTION	DATE	APPR
	SIGNATURE SUBMITTAL	6/10/2014	

NAVFAC

COMMONWEALTH OF VIRGINIA
JON-MICHAEL C. LEMON
Lic. No. 041993
06/10/2014
PROFESSIONAL ENGINEER
SEAL

PARSONS BRINCKERHOFF
engineering
architecture
277 Bendix Road
Suite 300
Virginia Beach, Virginia
23452
Phone: 757.466.1732
Fax: 757.466.1493

AE LOGO

APPROVED

FOR COMMANDER NAVFAC

ACTIVITY

SATISFACTORY TO DATE

DES	TC	DRW TC	CHK JL
PM	MMP		
BRANCH MANAGER	BDB		
CHIEF ENG/ARCH	RLJ/CRB		
FIRE PROTECTION	DAS		

NAVAL FACILITIES ENGINEERING COMMAND
DEPARTMENT OF THE NAVY
NAVAL FACILITIES ENGINEERING COMMAND – MID-ATLANTIC
NAVAL STATION – NORFOLK, VIRGINIA
HAMPTON ROADS IPT
NAVAL WEAPONS STATION
YORKTOWN, VIRGINIA

P-984 REGIMENTAL HEADQUARTERS

UTILITY PLAN – SIDEWALK

SCALE: AS NOTED

EPROJECT NO. 1113910

CONSTR. CONTR. NO. N40085-08-D-9739

NAVFAC DRAWING NO. 12664799

SHEET OF

CU102

DRAWFORM REVISION: 6 AUG 2007

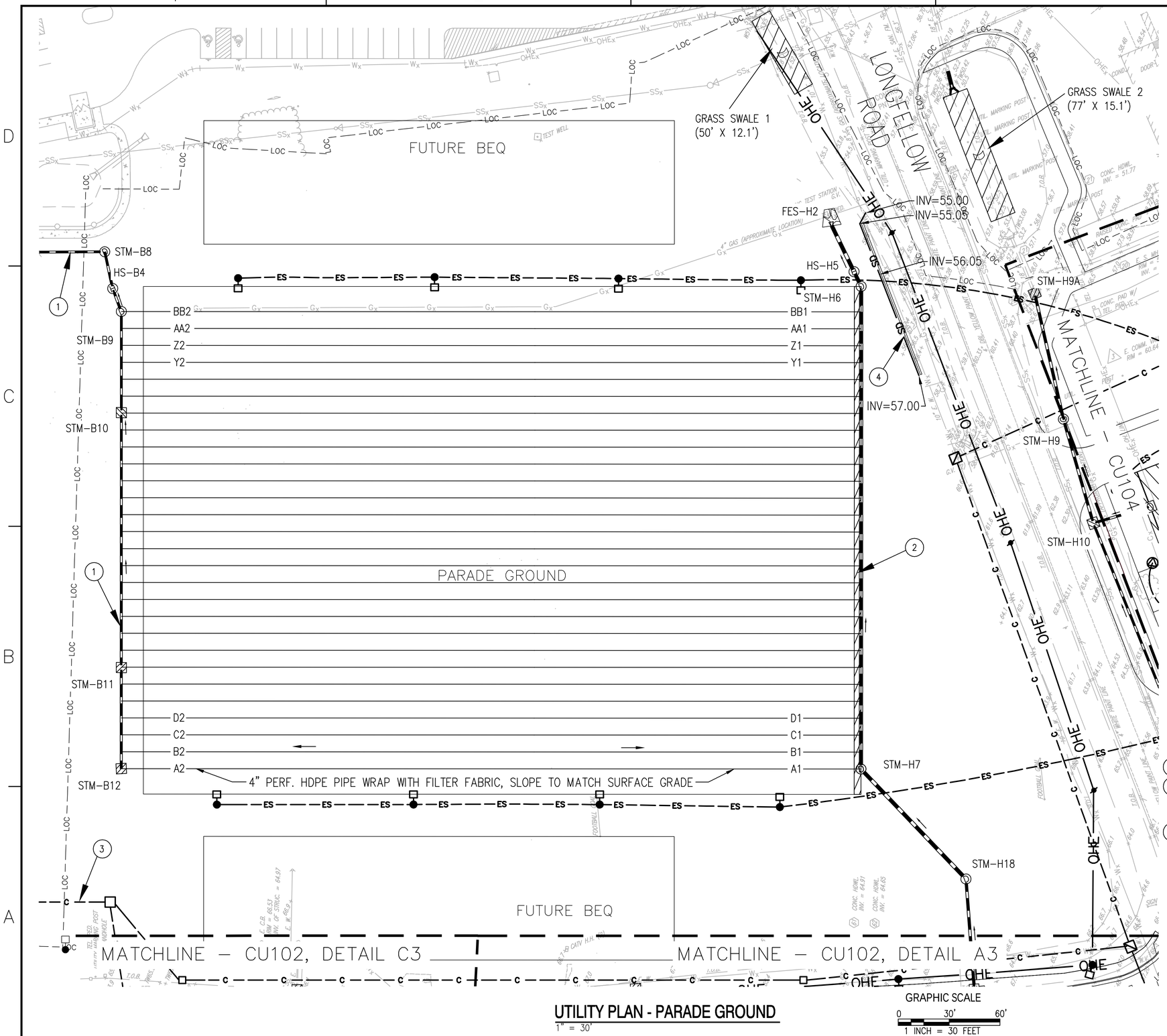

UTILITY PLAN - PARADE GROUND

1" = 30'

UTILITY LEGEND

EXISTING	PROPOSED	
Cx	C	COMMUNICATIONS UNDERGROUND
Ex	E	PRIMARY ELECTRIC UNDERGROUND
ESx	ES	SECONDARY ELECTRIC UNDERGROUND
OHEx	OHE	OVERHEAD ELECTRIC
Gx	G	GAS LINE
SSx	SS	SANITARY LINE
Wx	W	WATER LINE
		STORM LINE
	SD	FOUNDATION DRAINAGE SYSTEM
	RW	COOLING TOWER RETURN WATER
	SW	COOLING TOWER SUPPLY WATER
		STORM GRATE INLET SEE DETAIL A2 ON SHEET CU511
	CI	STORM CURB INLET ON GRADE SEE DETAIL A2 ON SHEET CU513
	CI	STORM CURB INLET AT SAG SEE DETAIL A2 ON SHEET CU513
E/C		ELEC/COMM MANHOLE/HANDHOLE SEE SHEET CU531
		TRANSFORMER
		GENERATOR
		CLOSED CIRCUIT COOLER
		SWITCHGEAR
		LIGHT POLE
		ELECTRICAL POLE
		FIRE DEPARTMENT CONNECTION SEE DETAIL B5 ON SHEET CU501
		FIRE HYDRANT SEE DETAIL A5 ON SHEET CU501
		WATER VALVE SEE DETAIL D1 ON SHEET CU501
		POST INDICATOR VALVE SEE DETAIL C3 ON SHEET CU501
S	S	SANITARY MANHOLE SEE DETAIL A4 ON SHEET CU521
	CO.	CLEANOUT SEE DETAIL B3 ON SHEET CU512
D	D	STORM MANHOLE SEE DETAIL A5, B5 ON SHEET CU511
		BMP SEE SHEET CU514 AND CU515
		END SECTION SEE DETAIL A2 ON SHEET CU512
	O	OUTLET STRUCTURE SEE DETAIL A2 ON SHEET CU514
	H	HYDRODYNAMIC SEPARATOR SEE DETAIL A5 ON SHEET CU514

NOTES

1. STORM PIPES ARE ASSOCIATED WITH P-985 BEQ PROJECT
2. 4-FT WIDE, 3-FT HIGH GRAVEL UNDERGROUND STORAGE. BOTTOM OF GRAVEL UNDERGROUND STORAGE SHALL BE FLUSH WITH THE BOTTOM OF STORM PIPE BETWEEN STM-H7 AND STM-H6.
3. SEE P985 BEQ PLANS FOR CONTINUATION OF THE COMM DUCTBANK.
4. 6" PVC FOUNDATION DRAINAGE SYSTEM SEE RETAINING WALL SECTION ON SHEET S-302

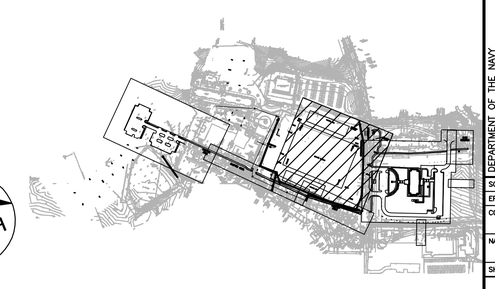

SYM	DESCRIPTION	DATE	APPR
	SIGNATURE SUBMITTAL	6/10/2014	

NAVFAC

COMMONWEALTH OF VIRGINIA
JON-MICHAEL C. LEMON
Lic. No. 041993
06/10/2014
PROFESSIONAL ENGINEER
SEAL

PARSONS BRINCKERHOFF
engineering
architecture
277 Bendix Road
Suite 300
Virginia Beach, Virginia
23452
Phone: 757.466.1732
Fax: 757.466.1493
AE LOGO

APPROVED

FOR COMMANDER NAVFAC

ACTIVITY

SATISFACTORY TO DATE

DES	TC	DRW TC	CHK JL
PM	MMP		
BRANCH MANAGER	BDB		
CHIEF ENG/ARCH	RLJ/CRB		
FIRE PROTECTION	DAS		

DEPARTMENT OF THE NAVY
NAVAL FACILITIES ENGINEERING COMMAND
NAVAL FACILITIES ENGINEERING COMMAND ~ MID-ATLANTIC
NAVAL STATION – NORFOLK, VIRGINIA
HAMPTON ROADS IPT
NAVAL WEAPONS STATION
YORKTOWN, VIRGINIA

P-984 REGIMENTAL HEADQUARTERS

UTILITY PLAN – PARADE GROUND

SCALE:	AS NOTED
EPROJECT NO.	1113910
CONSTR. CONTR. NO.	N40085-08-D-9739
NAVFAC DRAWING NO.	12664800
SHEET	CU103
OF	

DRAWFORM REVISION: 6 AUG 2007

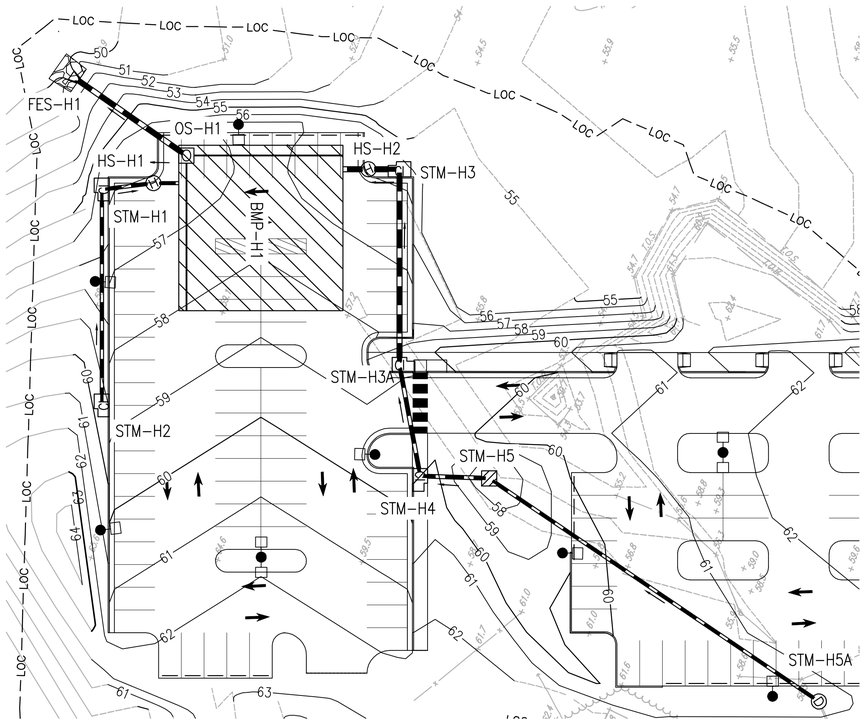

STORM SEWER PLAN 1

1" = 30'

KEYNOTES

1. FLARED END SECTION
   SEE SHEET CU512 DETAIL A2
2. OUTLET STRUCTURE
   SEE SHEET CU514 DETAIL A2
3. UNDERGROUND DETENTION BMP
   SEE SHEET CU514 DETAIL D4
4. HYDRODYNAMIC SEPARATOR
   SEE SHEET CU514 DETAIL A5
5. STORM GRATE INLET
   SEE SHEET CU511 DETAIL A2
6. CURB STORM INLET, DI-3B
   SEE SHEET CU515 DETAIL A2
8. STORM MANHOLE
   SEE SHEET CU511 DETAIL B5

NOTES

1. SEE SHEET CU516 FOR STORM CALCULATIONS

NORTH

GRAPHIC SCALE
0 30' 60'
1 INCH = 30 FEET

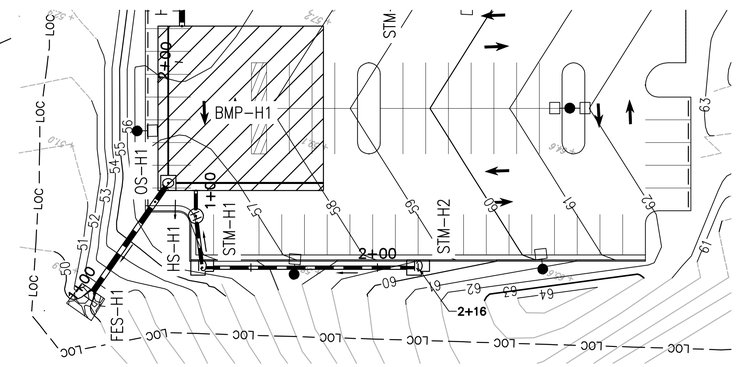

STORM SEWER PLAN 2

1" = 30'

GRAPHIC SCALE
0 30' 60'
1 INCH = 30 FEET

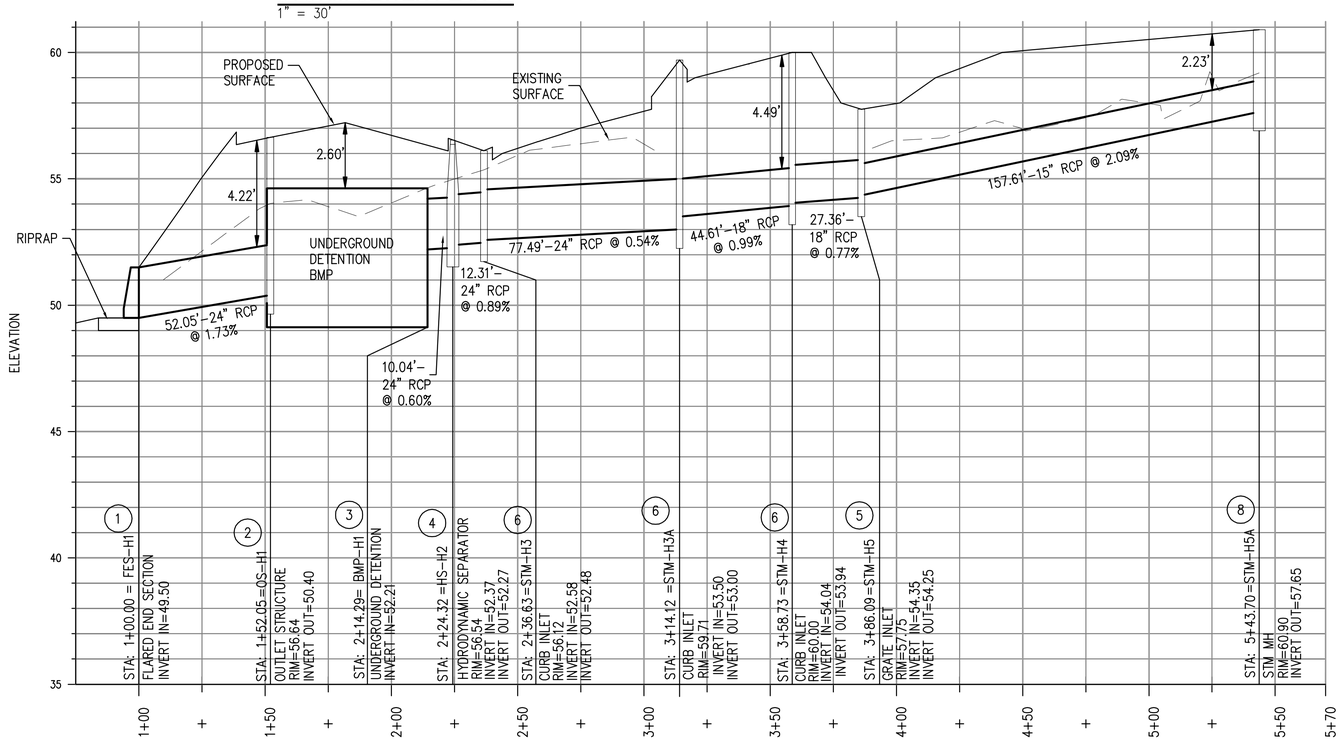

STORM SEWER PROFILE 1

1"=30'(H) 1"=3'(V)

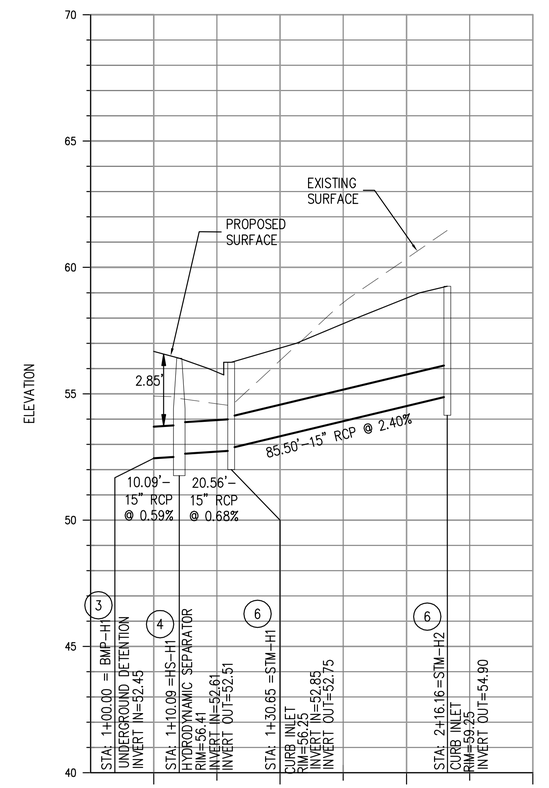

STORM SEWER PROFILE 2

1"=30'(H) 1"=3'(V)

SYM	DESCRIPTION	DATE	APPR
	SIGNATURE SUBMITTAL	6/10/2014	

NAVFAC

COMMONWEALTH OF VIRGINIA
JON-MICHAEL C. LEMON
Lic. No. 041993
06/10/2014
PROFESSIONAL ENGINEER
SEAL

PARSONS BRINCKERHOFF
engineering
architecture
277 Bendix Road
Suite 300
Virginia Beach, Virginia
23452
Phone: 757.466.1732
Fax: 757.466.1493

AE LOGO

APPROVED

FOR COMMANDER NAVFAC

ACTIVITY

SATISFACTORY TO DATE

DES	SM	DRW SM	CHK JL
PM	MMP		
BRANCH MANAGER	BDB		
CHIEF ENG/ARCH	RLJ/CRB		
FIRE PROTECTION	DAS		

DEPARTMENT OF THE NAVY
NAVAL FACILITIES ENGINEERING COMMAND
HAMPTON ROADS IPT

NAVAL FACILITIES ENGINEERING COMMAND ~ MID-ATLANTIC
NAVAL STATION ~ NORFOLK, VIRGINIA

NAVAL WEAPONS STATION
YORKTOWN, VIRGINIA

P-984 REGIMENTAL HEADQUARTERS

STORM SEWER PLAN & PROFILE

SCALE: AS NOTED
EPROJECT NO. 1113910
CONSTR. CONTR. NO. N40085-08-D-9739
NAVFAC DRAWING NO. 12664803
SHEET CU211 OF

DRAWFORM REVISION: 6 AUG 2007

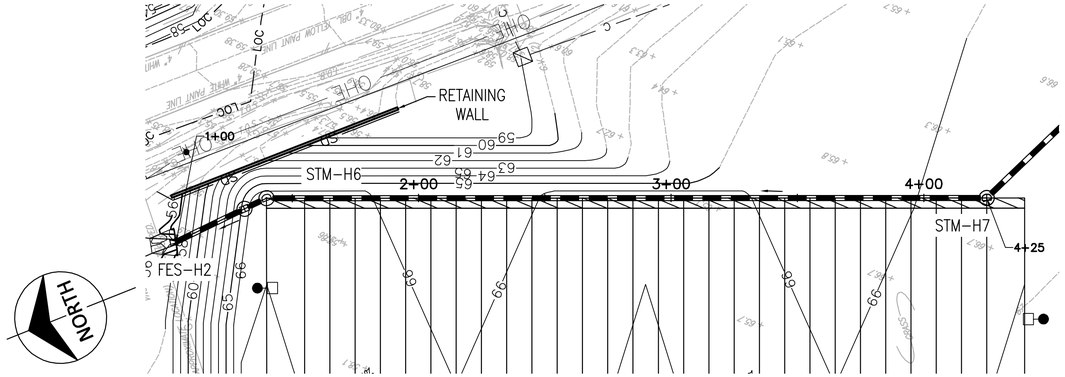

STORM SEWER PLAN 3

1" = 30'

GRAPHIC SCALE
0 30' 60'
1 INCH = 30 FEET

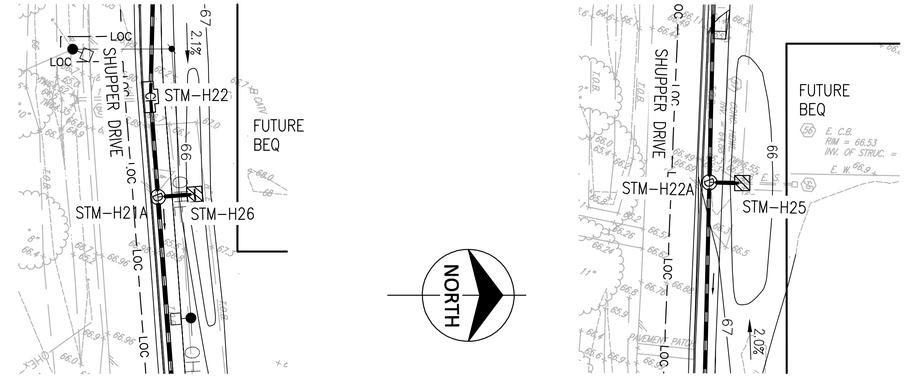

STORM SEWER PLAN 4

1" = 30'

GRAPHIC SCALE
0 30' 60'
1 INCH = 30 FEET

STORM SEWER PLAN 5

1" = 30'

KEYNOTES

1. FLARED END SECTION SEE SHEET CU512 DETAIL A2
2. OUTLET STRUCTURE SEE SHEET CU514 DETAIL A2
3. UNDERGROUND DETENTION BMP SEE SHEET CU514 DETAIL D4
4. HYDRODYNAMIC SEPARATOR SEE SHEET CU514 DETAIL A5
5. STORM GRATE INLET SEE SHEET CU511 DETAIL A2
6. CURB STORM INLET, DI-3B SEE SHEET CU515 DETAIL A2
7. CURB STORM INLET, DI-3C SEE SHEET CU515 DETAIL A2
8. STORM MANHOLE SEE SHEET CU511 DETAIL B5
9. DROP MANHOLE SEE SHEET CU513 DETAIL A5

NOTES

1. SEE SHEET CU516 FOR STORM CALCULATIONS
2. SEE SHEET CU513 DETAIL C2 FOR PIPE UNDERDRAIN DETAIL

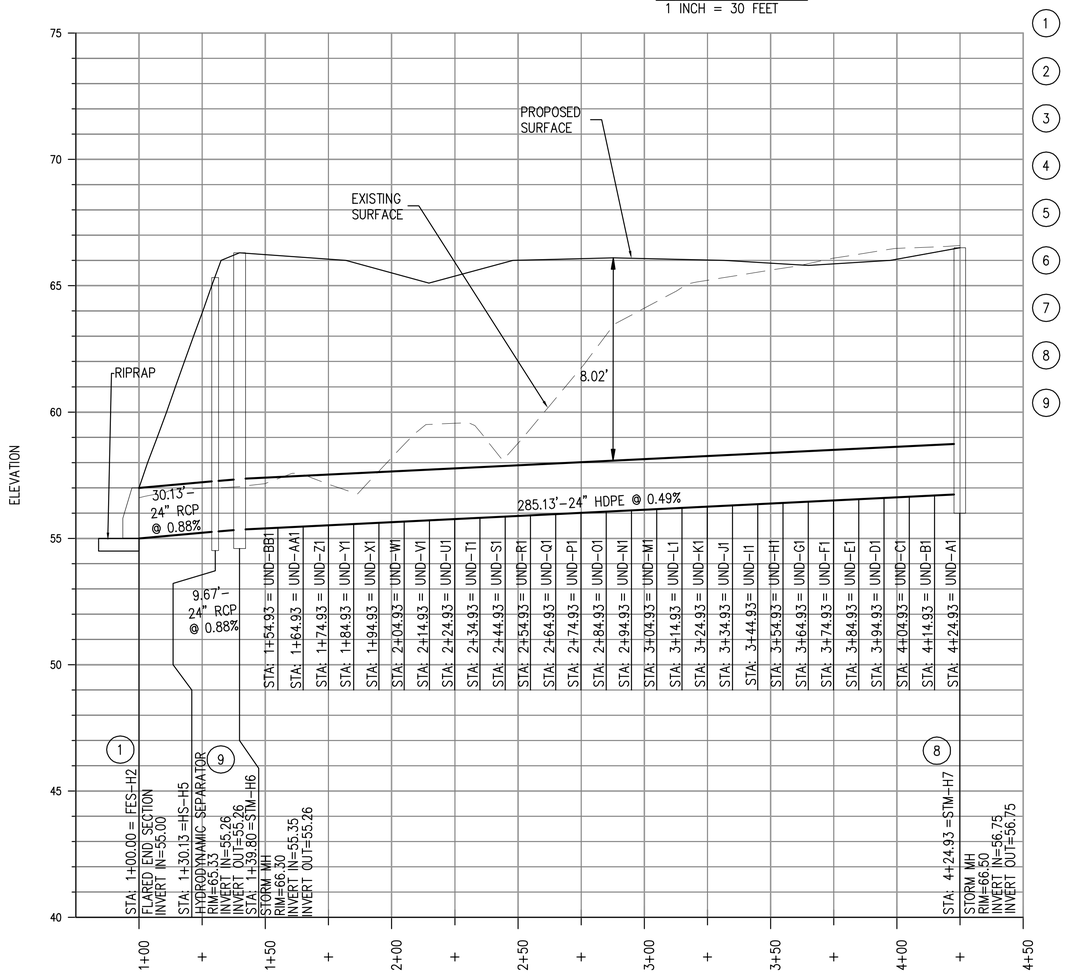

STORM SEWER PROFILE 3

1"=30'(H) 1"=3'(V)

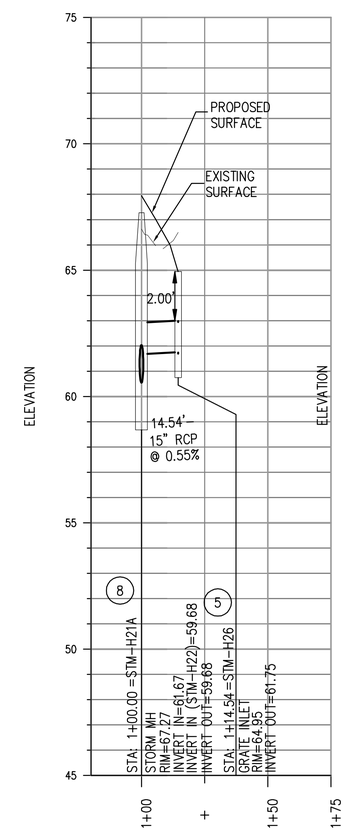

STORM SEWER PROFILE 4

1"=30'(H) 1"=3'(V)

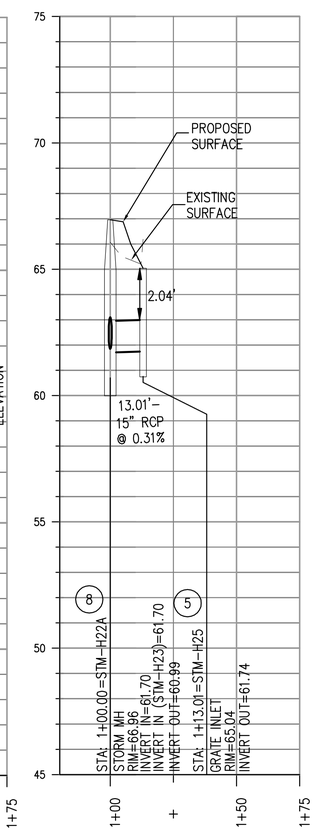

STORM SEWER PROFILE 5

1"=30'(H) 1"=3'(V)

SYM	DESCRIPTION	DATE	APPR
	SIGNATURE SUBMITTAL	6/10/2014	

NAVFAC

COMMONWEALTH OF VIRGINIA
JON-MICHAEL C. LEMON
Lic. No. 041993
06/10/2014
PROFESSIONAL ENGINEER
SEAL

PARSONS BRINCKERHOFF
engineering
architecture
277 Bendix Road
Suite 300
Virginia Beach, Virginia
23452
Phone: 757.466.1732
Fax: 757.466.1493
AE LOGO

APPROVED

FOR COMMANDER NAVFAC

ACTIVITY

SATISFACTORY TO DATE

DES SM	DRW SM	CHK JL	
PM		MMP	
BRANCH MANAGER		BDB	
CHIEF ENG/ARCH		RLJ/CRB	
FIRE PROTECTION		DAS	

DEPARTMENT OF THE NAVY
NAVAL FACILITIES ENGINEERING COMMAND
HAMPTON ROADS IPT
NAVAL FACILITIES ENGINEERING COMMAND ~ MID-ATLANTIC
NAVAL STATION - NORFOLK, VIRGINIA
NAVAL WEAPONS STATION YORKTOWN, VIRGINIA

P-984 REGIMENTAL HEADQUARTERS

STORM SEWER PLAN & PROFILE

SCALE: AS NOTED
EPROJECT NO. 1113910
CONSTR. CONTR. NO. N40085-08-D-9739
NAVFAC DRAWING NO. 12664804
SHEET OF
CU212

DRAWFORM REVISION: 6 AUG 2007

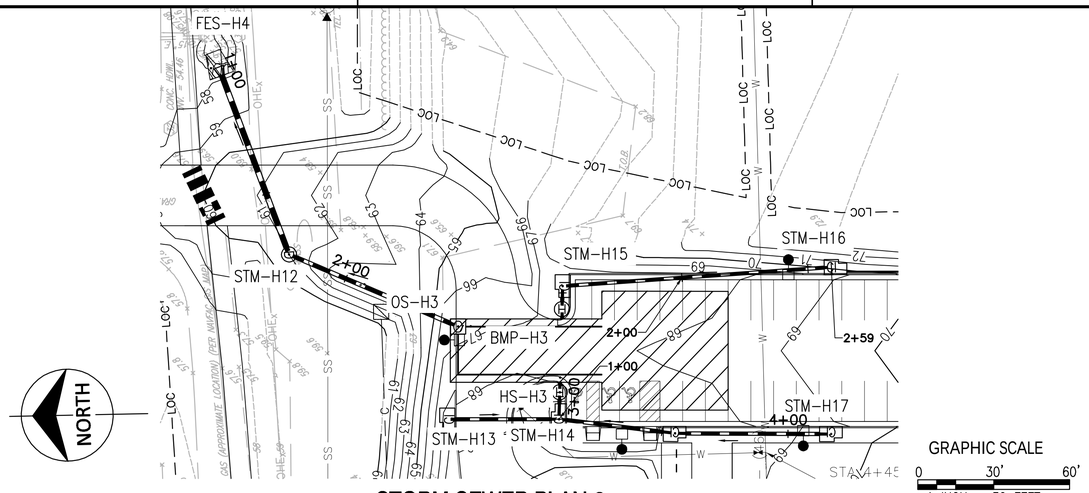

STORM SEWER PLAN 6

1" = 30'

KEYNOTES

1. FLARED END SECTION
   SEE SHEET CU512 DETAIL A2
2. OUTLET STRUCTURE
   SEE SHEET CU514 DETAIL A2
3. UNDERGROUND DETENTION BMP
   SEE SHEET CU514 DETAIL D4
4. HYDRODYNAMIC SEPARATOR
   SEE SHEET CU514 DETAIL A5
5. STORM GRATE INLET
   SEE SHEET CU511 DETAIL A2
6. CURB STORM INLET, DI-3B
   SEE SHEET CU515 DETAIL A2
7. CURB STORM INLET, DI-3C
   SEE SHEET CU515 DETAIL A2
8. STORM MANHOLE
   SEE SHEET CU511 DETAIL B5
9. DROP MANHOLE
   SEE SHEET CU513 DETAIL A5

NOTES

1. SEE SHEET CU516 FOR STORM CALCULATIONS

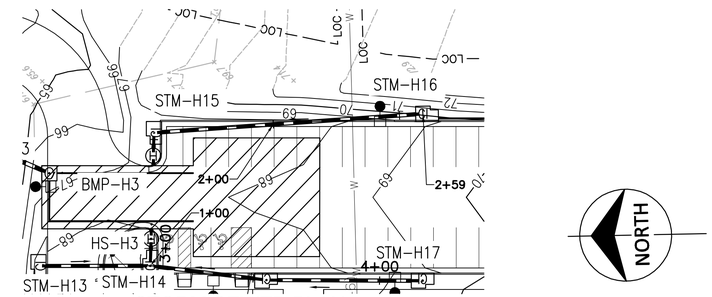

STORM SEWER PLAN 7

1" = 30'

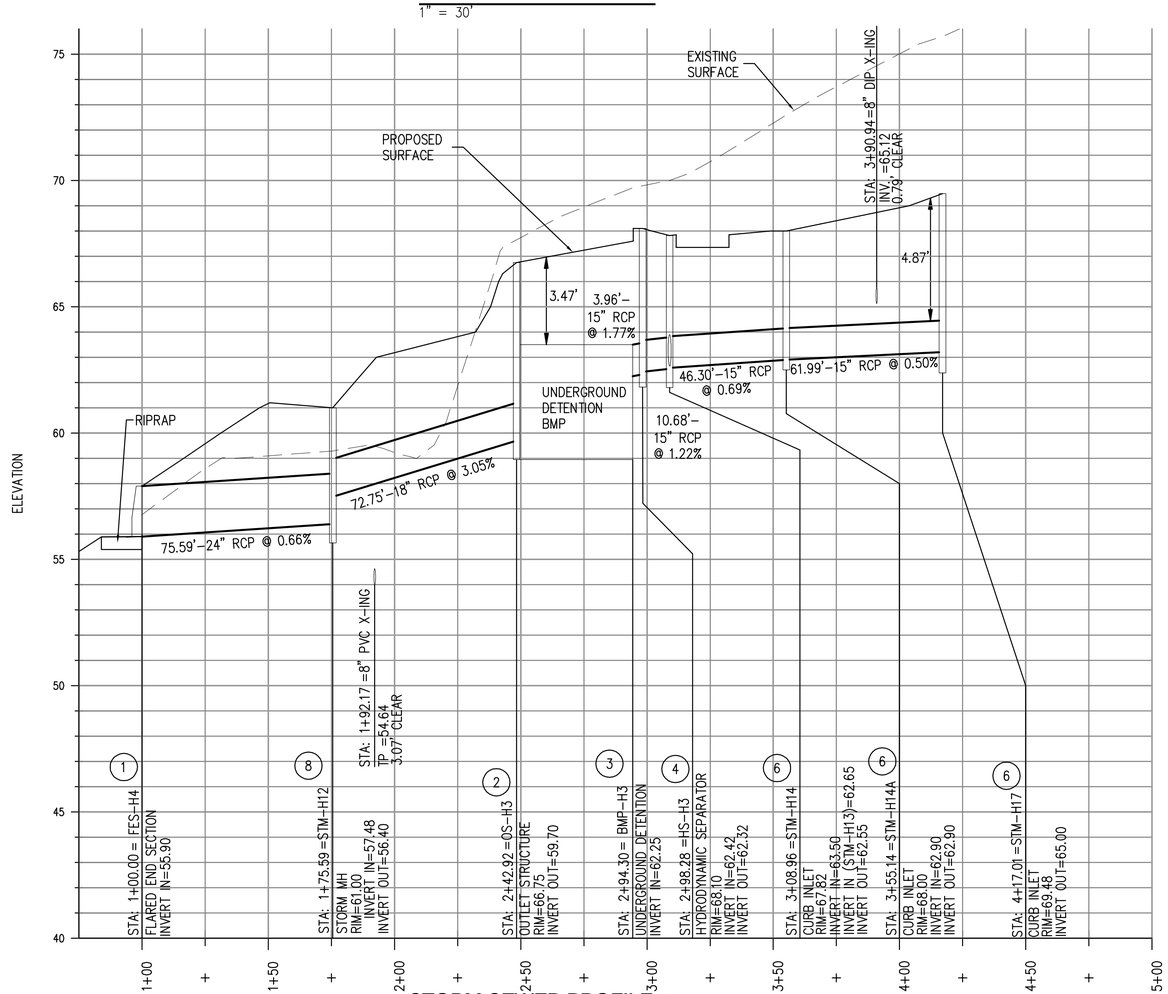

STORM SEWER PROFILE 6

1"=30'(H) 1"=3'(V)

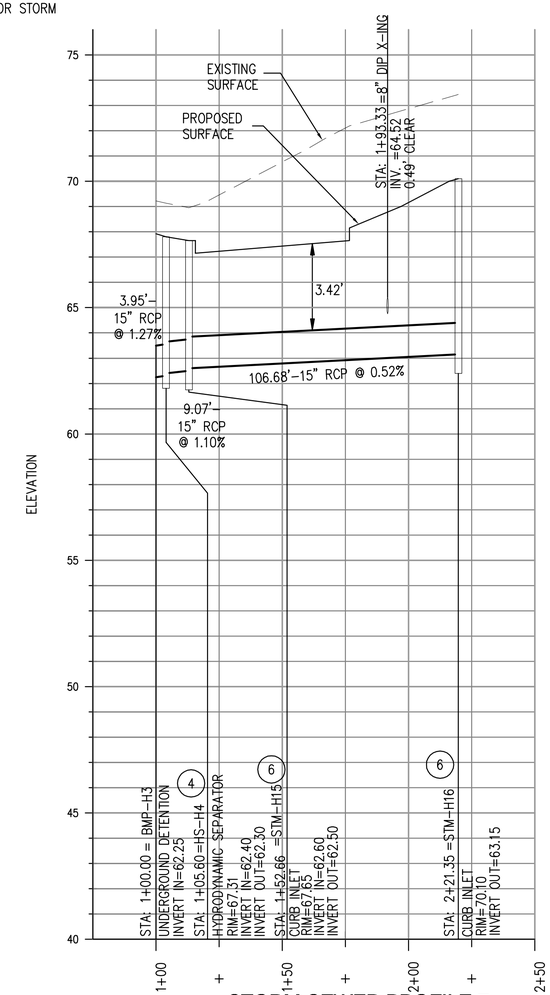

STORM SEWER PROFILE 7

1"=30'(H) 1"=3'(V)

SYM	DESCRIPTION	DATE	APPR
	SIGNATURE SUBMITTAL	6/10/2014	

NAVFAC

COMMONWEALTH OF VIRGINIA
JON-MICHAEL C. LEMON
Lic. No. 041993
06/10/2014
PROFESSIONAL ENGINEER
SEAL

PARSONS BRINCKERHOFF
engineering
architecture
277 Bendix Road
Suite 300
Virginia Beach, Virginia
23452
Phone: 757.466.1732
Fax: 757.466.1493
AE LOGO

APPROVED

FOR COMMANDER NAVFAC

ACTIVITY

SATISFACTORY TO DATE

DES	SM	DRW SM	CHK JL
PM	MMP		
BRANCH MANAGER	BDB		
CHIEF ENG/ARCH	RLJ/CRB		
FIRE PROTECTION	DAS		

NAVAL FACILITIES ENGINEERING COMMAND
DEPARTMENT OF THE NAVY
NAVAL FACILITIES ENGINEERING COMMAND – MID-ATLANTIC
NAVAL STATION – NORFOLK, VIRGINIA
HAMPTON ROADS IPT
NAVAL WEAPONS STATION
YORKTOWN, VIRGINIA

P-984 REGIMENTAL HEADQUARTERS

STORM SEWER PLAN & PROFILE

SCALE: AS NOTED
EPROJECT NO. 1113910
CONSTR. CONTR. NO. N40085-08-D-9739
NAVFAC DRAWING NO. 12664805
SHEET OF
CU213

DRAWFORM REVISION: 6 AUG 2007

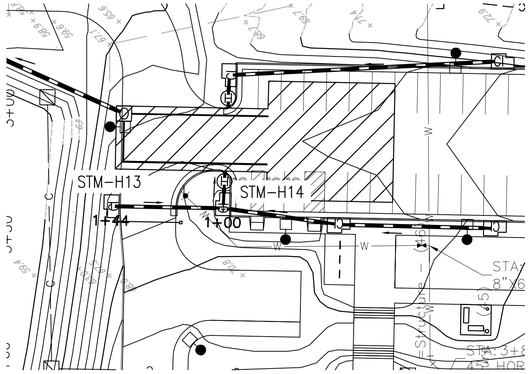

STORM SEWER PLAN 8

1" = 30'

GRAPHIC SCALE
0 30' 60'
1 INCH = 30 FEET

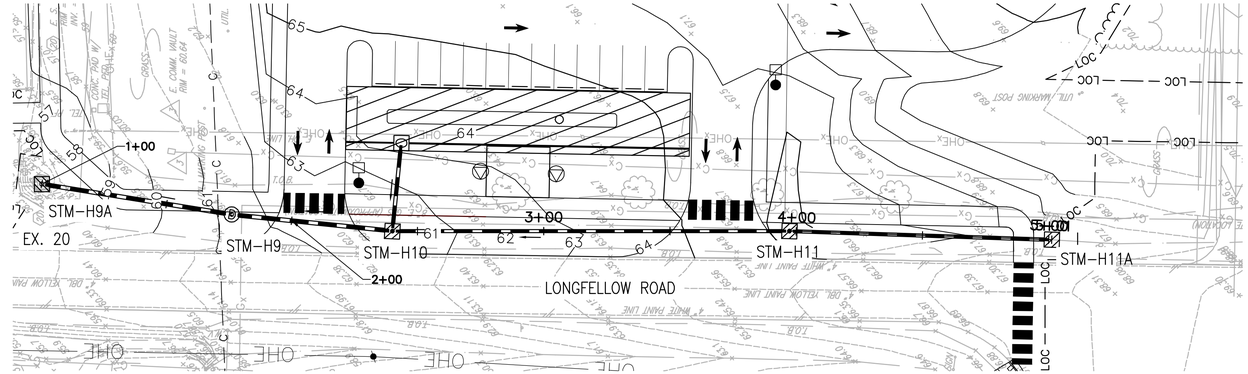

STORM SEWER PLAN 9

1" = 30'

GRAPHIC SCALE
0 30' 60'
1 INCH = 30 FEET

NORTH

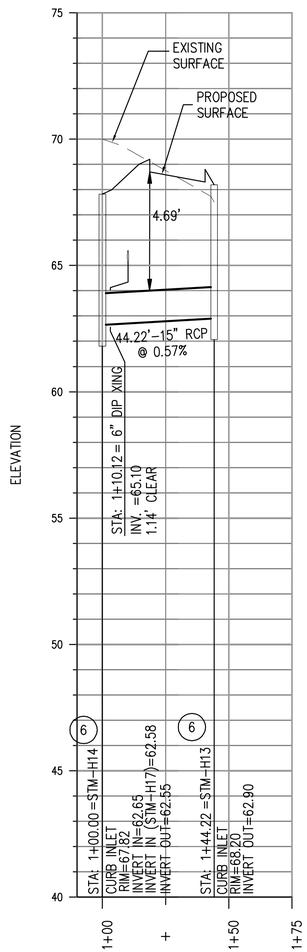

STORM SEWER PROFILE 8

1"=30'(H) 1"=3'(V)

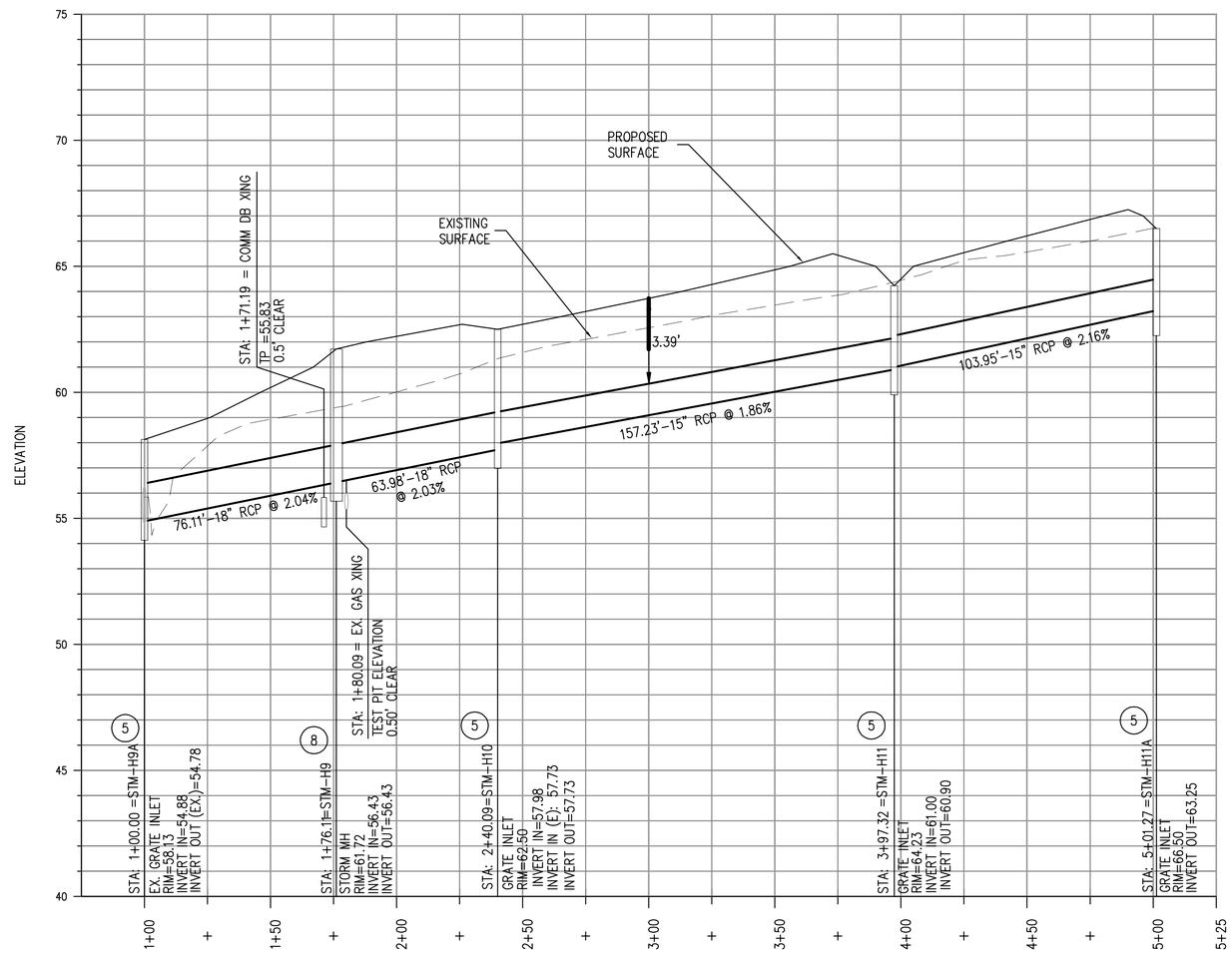

STORM SEWER PROFILE 9

1"=30'(H) 1"=3'(V)

KEYNOTES

1. FLARED END SECTION
   SEE SHEET CU512 DETAIL A2
2. OUTLET STRUCTURE
   SEE SHEET CU514 DETAIL A2
3. UNDERGROUND DETENTION BMP
   SEE SHEET CU514 DETAIL D4
4. HYDRODYNAMIC SEPARATOR
   SEE SHEET CU514 DETAIL A5
5. STORM GRATE INLET
   SEE SHEET CU511 DETAIL A2
6. CURB STORM INLET, DI-3B
   SEE SHEET CU515 DETAIL A2
7. CURB STORM INLET, DI-3C
   SEE SHEET CU515 DETAIL A2
8. STORM MANHOLE
   SEE SHEET CU511 DETAIL B5
9. DROP MANHOLE
   SEE SHEET CU513 DETAIL A5

NOTES

1. SEE SHEET CU516 FOR STORM CALCULATIONS

SYM	DESCRIPTION	DATE	APPR
	SIGNATURE SUBMITTAL	6/10/2014	

NAVFAC

COMMONWEALTH OF VIRGINIA
JON-MICHAEL C. LEMON
Lic. No. 041993
06/10/2014
PROFESSIONAL ENGINEER
SEAL

PARSONS BRINCKERHOFF
engineering
architecture
277 Bendix Road
Suite 300
Virginia Beach, Virginia
23452
Phone: 757.466.1732
Fax: 757.466.1493
AE LOGO

APPROVED
FOR COMMANDER NAVFAC
ACTIVITY
SATISFACTORY TO DATE

DES	SM	DRW SM	CHK JL
PM	MMP		
BRANCH MANAGER	BDB		
CHIEF ENG/ARCH	RLJ/CRB		
FIRE PROTECTION	DAS		

DEPARTMENT OF THE NAVY
NAVAL FACILITIES ENGINEERING COMMAND ~ MID-ATLANTIC
NAVAL FACILITIES ENGINEERING COMMAND
NAVAL STATION - NORFOLK, VIRGINIA
HAMPTON ROADS IPT
NAVAL WEAPONS STATION
YORKTOWN, VIRGINIA
P-984 REGIMENTAL HEADQUARTERS
STORM SEWER PLAN & PROFILE

SCALE:	AS NOTED
EPROJECT NO.	1113910
CONSTR. CONTR. NO.	N40085-08-D-9739
NAVFAC DRAWING NO.	12664806
SHEET	CU214

DRAWFORM REVISION: 6 AUG 2007

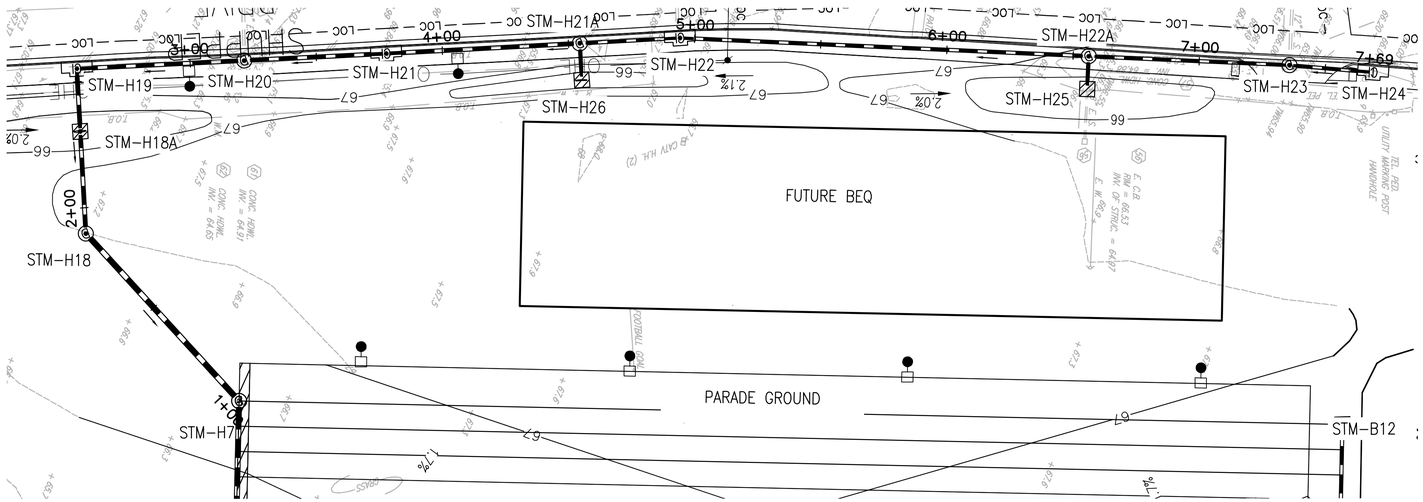

STORM SEWER PLAN 10

1" = 30'

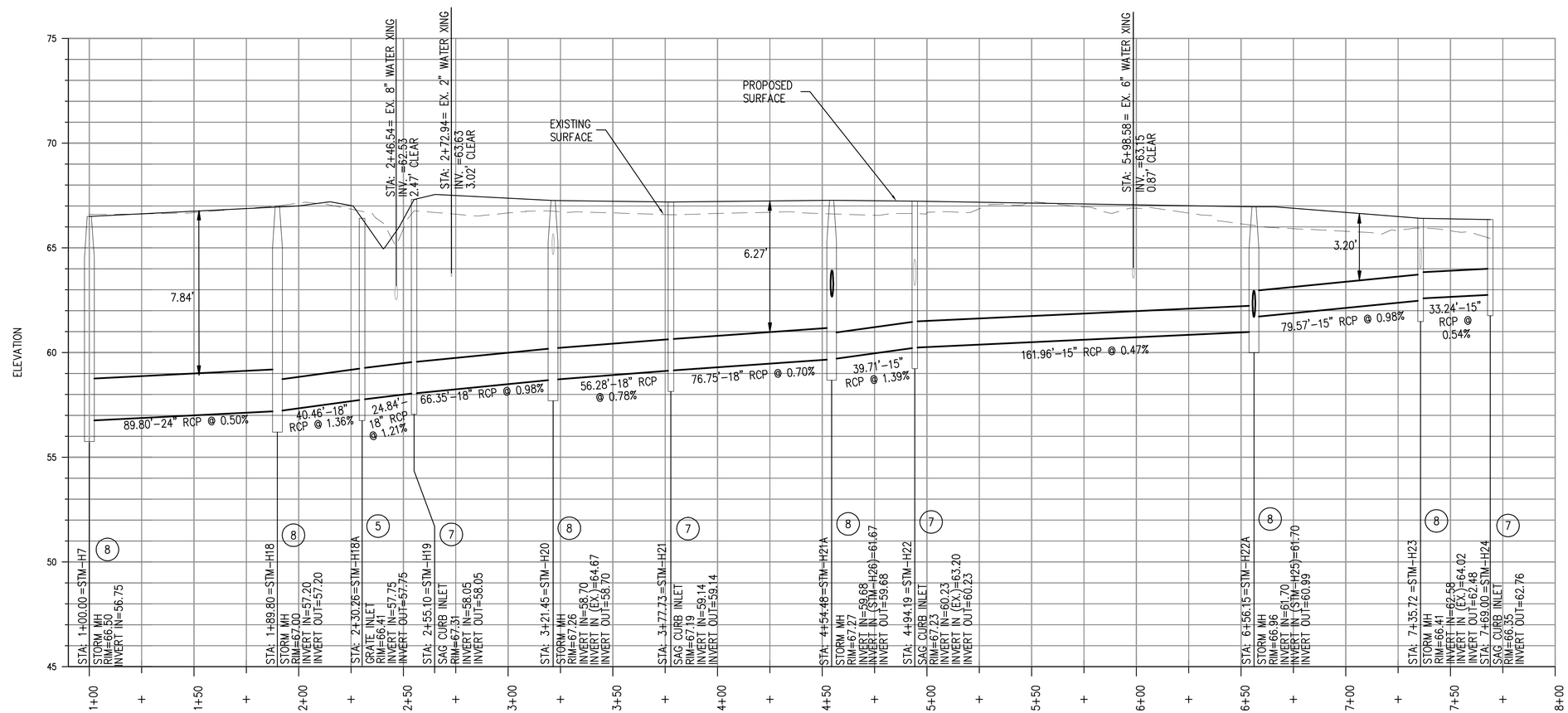

STORM SEWER PROFILE 10

1"=30'(H) 1"=3'(V)

KEYNOTES

1. FLARED END SECTION
   SEE SHEET CU512 DETAIL A2
2. OUTLET STRUCTURE
   SEE SHEET CU514 DETAIL A2
3. UNDERGROUND DETENTION BMP
   SEE SHEET CU514 DETAIL D4
4. HYDRODYNAMIC SEPARATOR
   SEE SHEET CU514 DETAIL A5
5. STORM GRATE INLET
   SEE SHEET CU511 DETAIL A2
6. CURB STORM INLET, DI-3B
   SEE SHEET CU515 DETAIL A2
7. CURB STORM INLET, DI-3C
   SEE SHEET CU515 DETAIL A2
8. STORM MANHOLE
   SEE SHEET CU511 DETAIL B5
9. DROP MANHOLE
   SEE SHEET CU513 DETAIL A5

NOTES

1. SEE SHEET CU516 FOR STORM CALCULATIONS

SYM	DESCRIPTION	DATE	APPR
	SIGNATURE SUBMITTAL	6/10/2014	

NAVFAC

COMMONWEALTH OF VIRGINIA
JON-MICHAEL C. LEMON
Lic. No. 041993
06/10/2014
PROFESSIONAL ENGINEER
SEAL

PARSONS BRINCKERHOFF
engineering
architecture
277 Bendix Road
Suite 300
Virginia Beach, Virginia
23452
Phone: 757.466.1732
Fax: 757.466.1493

AE LOGO

APPROVED
FOR COMMANDER NAVFAC
ACTIVITY
SATISFACTORY TO DATE

DES	SM	DRW SM	CHK JL
PM	MMP		
BRANCH MANAGER	BDB		
CHIEF ENG/ARCH	RLJ/CRB		
FIRE PROTECTION	DAS		

DEPARTMENT OF THE NAVY
NAVAL FACILITIES ENGINEERING COMMAND
HAMPTON ROADS IPT
NAVAL WEAPONS STATION
YORKTOWN, VIRGINIA

NAVAL FACILITIES ENGINEERING COMMAND ~ MID-ATLANTIC
NAVAL STATION – NORFOLK, VIRGINIA

P-984 REGIMENTAL HEADQUARTERS

STORM SEWER PLAN & PROFILE

SCALE: AS NOTED
EPROJECT NO. 1113910
CONSTR. CONTR. NO. N40085-08-D-9739
NAVFAC DRAWING NO. 12664807
SHEET OF
CU215

DRAWFORM REVISION: 6 AUG 2007

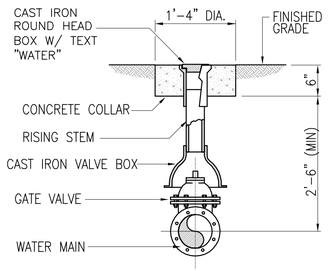

GATE VALVE
NTS CU104 D1

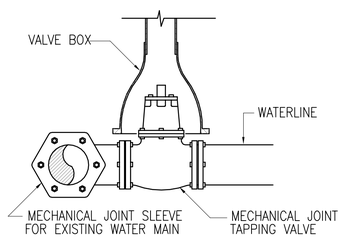

WET TAP
NTS C1

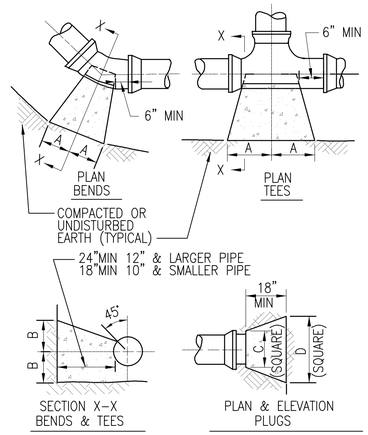

SIZE	1/4 BENDS		1/8 BENDS		1/16 BENDS		TEES		PLUGS	
	A	B	A	B	A	B	A	B	C	D
6"	16"	10"	9"	10"	6"	8"	10"	12"	10"	21"
8"	22"	13"	12"	13"	8"	10"	13"	16"	12"	29"

THRUST BLOCK
NTS C2

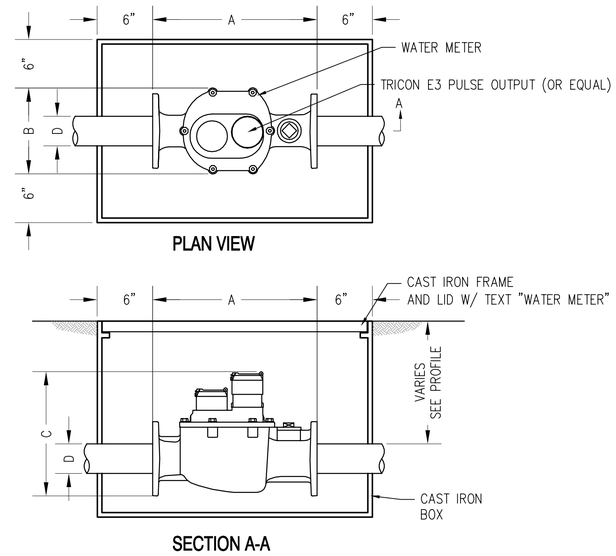

WATER METER AND BOX
NTS C4

NOTES

1. WATER METERS SHALL BE COMPOUND TYPE.
2. ALL METERS SHALL COMPLY WITH ANSI/AWAA C700 STANDARDS.
3. METERING CHAMBER SHALL BE DIMENSIONALLY STABLE AND NONCORROSIVE.
4. WATER METER SHALL BE AN ADVANCED TYPE WITH AUTOMATIC METER READING FUNCTIONALITY THAT PROVIDES STANDARD CONSUMPTION AND INTERVAL DATA MESSAGES THAT ARE UNIT IDENTIFICATION NUMBER, UNIT TYPE, WATER USAGE, TAMPER STATUS AND CRC CHECK AT A MINIMUM.
5. WATER METERS SHALL BE NEPTUNE HP TURBINES WITH TRICON E3 PULSE OUTPUTS INSTALLED (OR EQUAL). NEPTUNE WATER METERS SHALL BE EQUIPPED WITH TOUCH PADS THAT ENABLE REMOTE READING AND TRICON E3 PULSE OUTPUTS. THE COMMUNICATION OF EVERY METER SHALL BE VERIFIED AFTER INSTALLATION.
6. TEST SWITCHES SHALL BE INSTALLED WITH THE METER.
7. WATER METER SHALL BE EQUIPPED WITH A TOUCH PAD THAT ENABLES REMOTE READING. TOUCH PAD SHALL BE INSTALLED ON THE WATER METER BOX LID.
8. INSTALL A 1" PVC CONDUIT FROM THE WATER METER BOX TO THE ELECTRICAL METER LOCATED NEAR THE TRANSFORMER.

DIMENSIONS PER NEPTUNE HP TURBINE METER (INCHES)				
METER SIZE	A	B	C	D
3"	12	7 1/2	10	3
4"	14	9	10 7/8	4

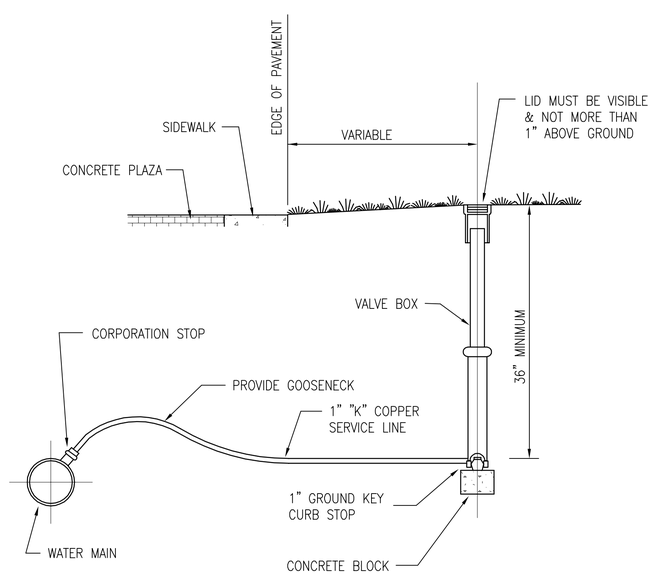

WATER SERVICE
NTS A1

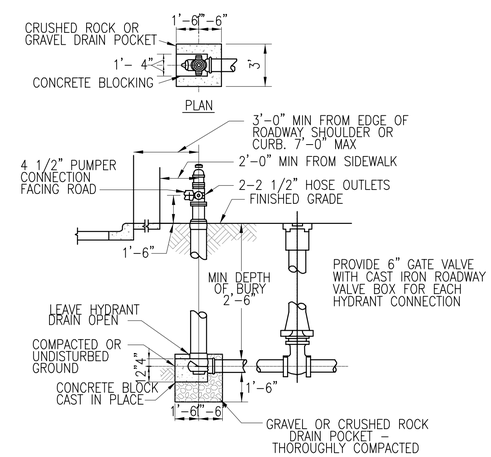

HYDRANTS RECEIVING POTABLE WATER SHALL HAVE BARRELS PAINTED YELLOW.

FIRE HYDRANT
NTS CU104 A5

SYM	DESCRIPTION	DATE	APPR
	SIGNATURE SUBMITTAL	6/10/2014	

NAVFAC

COMMONWEALTH OF VIRGINIA
JON-MICHAEL C. LEMON
Lic. No. 041993
06/10/2014
PROFESSIONAL ENGINEER
SEAL

PARSONS BRINCKERHOFF
engineering
architecture
277 Bendix Road
Suite 300
Virginia Beach, Virginia
23452
Phone: 757.466.1732
Fax: 757.466.1493

AE LOGO

APPROVED

FOR COMMANDER NAVFAC

ACTIVITY

SATISFACTORY TO DATE

DES	TC	DRW KC	CHK JL
PM	MMP		
BRANCH MANAGER	BDB		
CHIEF ENG/ARCH	RLJ/CRB		
FIRE PROTECTION	DAS		

DEPARTMENT OF THE NAVY
NAVAL FACILITIES ENGINEERING COMMAND
NAVAL FACILITIES ENGINEERING COMMAND - MID-ATLANTIC
NAVAL STATION - NORFOLK, VIRGINIA
HAMPTON ROADS IPT

NAVAL WEAPONS STATION
YORKTOWN, VIRGINIA

P-984 REGIMENTAL HEADQUARTERS

WATER DISTRIBUTION DETAILS

SCALE: AS NOTED
EPROJECT NO. 1113910
CONSTR. CONTR. NO. N40085-08-D-9739
NAVFAC DRAWING NO. 12664809
SHEET OF
CU501

DRAWFORM REVISION: 6 AUG 2007

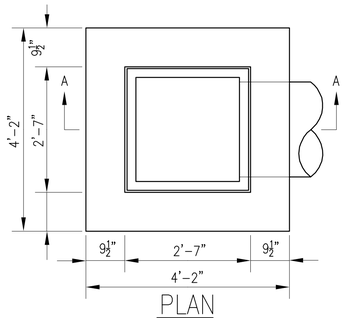

PLAN
(GRATE REMOVED)

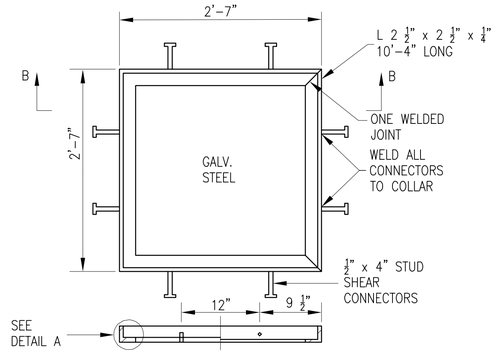

SECTION B-B
COLLAR DETAIL

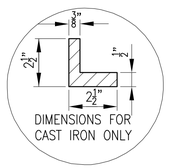

DETAIL A

DETAIL B

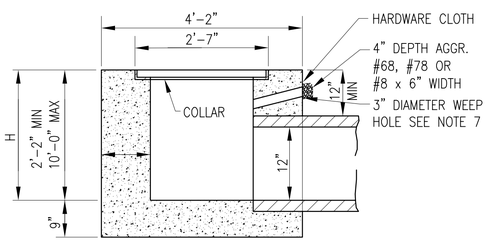

SECTION A-A

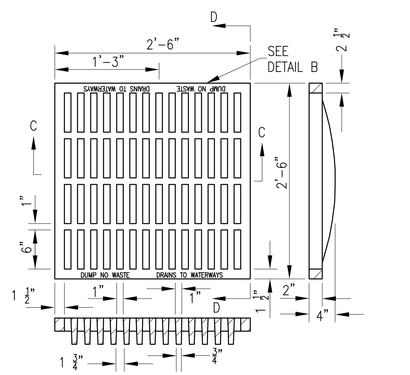

SECTION C-C SECTION D-D
GRATE DETAIL

STANDARD GRATE INLET NOTES:

1. THE "H" DIMENSION SHOWN ON THE STANDARDS AND SPECIFIED ON THE PLANS WILL BE MEASURED FROM THE INVERT OF THE OUTFALL PIPE TO THE TOP OF THE STRUCTURE. PLAN "H" DIMENSIONS ARE APPROXIMATE ONLY FOR ESTIMATING PURPOSES AND THE ACTUAL DIMENSIONS SHALL BE DETERMINED BY THE CONTRACTOR FROM FIELD CONDITIONS.
2. WHEN SPECIFIED ON THE PLANS THE INVERT IS TO BE SHAPED IN ACCORDANCE TO DETAIL B5 SHEET CU502. THE COST OF FURNISHING AND PLACING ALL MATERIALS INCIDENTAL TO THE SHAPING IS TO BE INCLUDED IN THE BID PRICE FOR THE STRUCTURE.
3. IN THE EVENT THE INVERT OF THE OUTFALL PIPE IS HIGHER THAN THE BOTTOM OF THE STRUCTURE, THE INVERT OF THE STRUCTURE SHALL BE SHAPED WITH CEMENT MORTAR TO PREVENT STANDING OR PONDING OF WATER IN THE STRUCTURE. THE COST OF FURNISHING AND PLACING ALL MATERIALS INCIDENTAL TO INLET SHAPING IS TO BE INCLUDED IN THE BID PRICE FOR THE STRUCTURE.
4. STEPS ARE TO BE PROVIDED WHEN "H" IS 4'-0" OR GREATER. FOR DETAILS SEE DETAIL A2 SHEET CU502.
5. THIS ITEM MAY BE PRECAST OR CAST-IN-PLACE.
6. #4 x 8" SMOOTH DOWELS AT APPROXIMATELY 12" C-C TO BE PLACED IN ALL AREAS ADJACENT TO ABUTTING CONCRETE TO PREVENT SETTLEMENT. IN LIEU OF DOWELS A 2"X4" NOTCH MAY BE PROVIDED.
7. 3" DIAMETER WEEP HOLE WITH 12"x12" PLASTIC HARDWARE CLOTH ¼" MESH OR GALVANIZED STEEL WIRE, MINIMUM WIRE DIAMETER 0.03", NUMBER 4 MESH HARDWARE CLOTH ANCHORED FIRMLY TO THE OUTSIDE OF THE STRUCTURE.
8. CAST IN PLACE CONCRETE IS TO BE CLASS A3 (3000 PSI). PRECAST CONCRETE IS TO BE 4000 PSI.
9. ANY ALTERNATE METHODS OF ANCHORAGE MEETING THE APPROVAL OF THE ENGINEER MAY BE SUBSTITUTED FOR THE CAST IRON LUGS AS SHOWN HEREON.
10. DUMP NO WASTE DRAINS TO WATERWAY LETTERING IS REQUIRED ON ALL GRATES. LOCATION OF LETTERING MAY VARY BY MANUFACTURER.

STANDARD GRATE INLET (A2)

NTS CU101, CU103, CU104

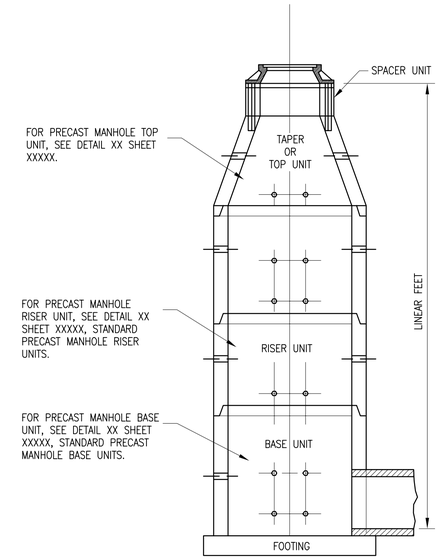

GENERAL PRECAST MANHOLE NOTES:

1. IN THE EVENT THE INVERT OF THE OUTFALL PIPE IS HIGHER THAN THE BOTTOM OF THE STRUCTURE, THE INVERT OF THE STRUCTURE SHALL BE SHAPED WITH CEMENT MORTAR TO PREVENT STANDING OR PONDING OF WATER IN THE STRUCTURE. THIS WILL APPLY TO ALL STRUCTURES MEETING THIS CONDITION. THE COST FOR INVERT SHAPING SHALL BE INCLUDED IN THE PRICE BID FOR THE STRUCTURE.
2. WHEN SPECIFIED ON THE PLANS THE INVERT IS TO BE SHAPED IN ACCORDANCE TO DETAIL _ SHEET _. THE COST OF FURNISHING AND PLACING ALL MATERIALS INCIDENTAL TO THE SHAPING IS TO BE INCLUDED IN THE PRICE BID FOR THE STRUCTURE.
3. ALL PRECAST STRUCTURES TO BE CONSTRUCTED WITH 4000 PSI MINIMUM CONCRETE.
4. STEPS IN ACCORDANCE WITH DETAIL _ SHEET _ ARE TO BE PROVIDED IN ALL MANHOLES AND IN ALL DROP INLETS WITH AN "H" DIMENSION OF 4'-0" OR GREATER.
5. 3" DIAMETER WEEP HOLES WILL BE REQUIRED IN PRECAST STRUCTURE LOCATED ADJACENT TO THE PAVEMENT TO DRAIN SUBBASE. PLACEMENT OF WEEP HOLES IN THE PRECAST UNIT WILL BE DETERMINED BY THE PROXIMITY OF THE STRUCTURE TO THE SUBBASE.
6. WEEP HOLES WILL HAVE 12"X12" PLASTIC HARDWARE CLOTH, ¼" MESH OR GALVANIZED STEEL WIRE, MINIMUM WIRE DIAMETER 0.03", NUMBER 4 MESH HARDWARE CLOTH ANCHORED FIRMLY TO OUTSIDE OF STRUCTURE.
7. PRECAST UNITS LOCATED ADJACENT TO CAST-IN-PLACE CONCRETE ITEMS, SUCH AS FLUMES, DITCHES, GUTTERS, AND SIDEWALKS SHALL BE CONNECTED TO THE ADJACENT UNIT BY MEANS OF NO. 4 SMOOTH STEEL DOWELS SPACED ON APPROXIMATELY 12" CENTERS THROUGHOUT THE CONTACT LENGTH AND EXTENDING AT LEAST 4" INTO BOTH THE PRECAST UNIT TO RECEIVE THE DOWELS, THEY SHALL NOT EXCEED ⅝" DIAMETER.
8. ¾" CHAMFER MAY BE PROVIDED ON ALL EDGES AT MANUFACTURER'S OPTION.

PRECAST CONCRETE STORM MANHOLE (B5)

NTS CU101, CU103, CU104

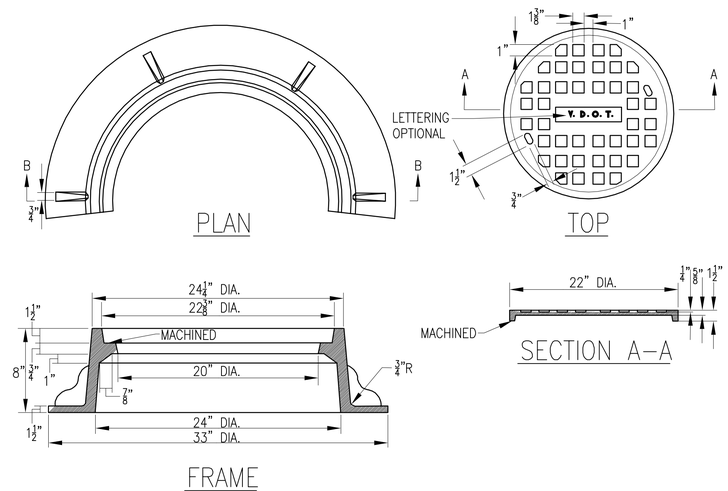

STORM MANHOLE FRAME & COVER (A5)

NTS CU101, CU103, CU104

SYM	DESCRIPTION	DATE	APPR
	SIGNATURE SUBMITTAL	6/10/2014	

NAVFAC

COMMONWEALTH OF VIRGINIA
JON-MICHAEL C. LEMON
Lic. No. 041993
06/10/2014
PROFESSIONAL ENGINEER
SEAL

PARSONS BRINCKERHOFF
engineering
architecture
277 Bendix Road
Suite 300
Virginia Beach, Virginia
23452
Phone: 757.466.1732
Fax: 757.466.1493
AE LOGO

APPROVED
FOR COMMANDER NAVFAC
ACTIVITY
SATISFACTORY TO DATE

DES	SM	DRW KC	CHK JL
PM	MMP		
BRANCH MANAGER	BDB		
CHIEF ENG/ARCH	RLJ/CRB		
FIRE PROTECTION	DAS		

DEPARTMENT OF THE NAVY
NAVAL FACILITIES ENGINEERING COMMAND - MID-ATLANTIC
NAVAL FACILITIES ENGINEERING COMMAND
NAVAL STATION - NORFOLK, VIRGINIA
HAMPTON ROADS IPT
NAVAL WEAPONS STATION YORKTOWN, VIRGINIA
P-984 REGIMENTAL HEADQUARTERS
STORM SEWER DETAILS

SCALE: AS NOTED
EPROJECT NO. 1113910
CONSTR. CONTR. NO. N40085-08-D-9739
NAVFAC DRAWING NO. 12664810
SHEET OF
CU511

DRAWFORM REVISION: 6 AUG 2007

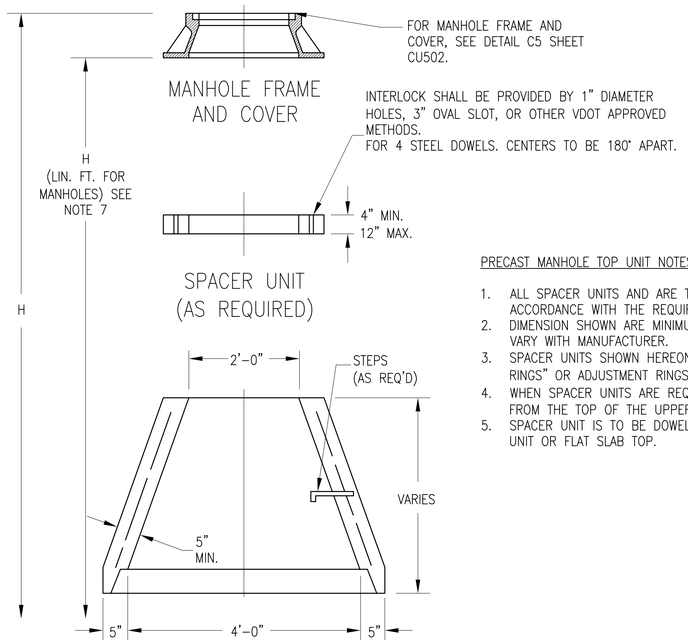

PRECAST MANHOLE TOP UNIT NOTES:

1. ALL SPACER UNITS AND ARE TAPER UNITS ARE TO BE IN ACCORDANCE WITH THE REQUIREMENTS OF AASHTO M199.
2. DIMENSION SHOWN ARE MINIMUM. ACTUAL DIMENSIONS MAY VARY WITH MANUFACTURER.
3. SPACER UNITS SHOWN HEREON ARE ALSO KNOWN AS "GRADE RINGS" OR ADJUSTMENT RINGS".
4. WHEN SPACER UNITS ARE REQUIRED, "H" IS TO BE MEASURED FROM THE TOP OF THE UPPERMOST SPACER.
5. SPACER UNIT IS TO BE DOWELED OR MORTARED TO TAPER UNIT OR FLAT SLAB TOP.

STANDARD PRECAST MANHOLE TOP UNITS

NTS — C2

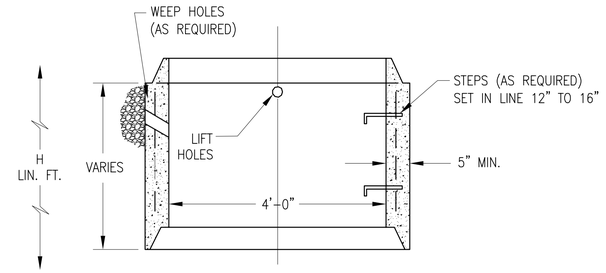

PRECAST MANHOLE RISER UNIT NOTES:

1. ALL RISER UNITS ARE TO BE IN ACCORDANCE WITH THE REQUIREMENTS OR AASHTO M199
2. WHERE OPENINGS ARE REQUIRED FOR PIPE, THEY SHALL BE FORMED, DRILLED, OR NEATLY CUT AS APPROVED BY THE ENGINEER. THE CONTRACTOR SHALL FURNISH THE FABRICATOR WITH THE ANGLES BETWEEN CENTER LINES, THE INVERT ELEVATIONS, AND THE SIZE OF ALL PIPES TO ENTER THE MANHOLE.
3. DIMENSIONS SHOWN ARE MINIMUM. ACTUAL DIMENSIONS MAY VARY WITH MANUFACTURER.
4. "D" IS NOMINAL DIAMETER.
5. TONGUE AND GROOVE JOINT ARE TO BE OR FABRICATOR'S DESIGN MEETING VDOT APPROVAL. JOINTS ARE TO BE SEALED WITH MORTAR, O-RING GASKETS, OR BUTYL RUBBER.

STANDARD PRECAST MANHOLE RISER UNITS

NTS — CU101, CU103, CU104 — D5

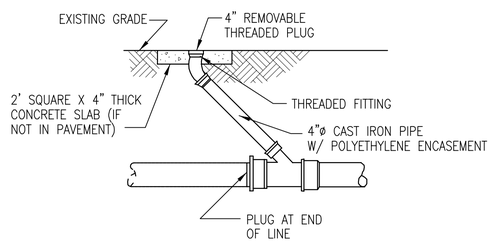

CLEANOUT

NTS — B3

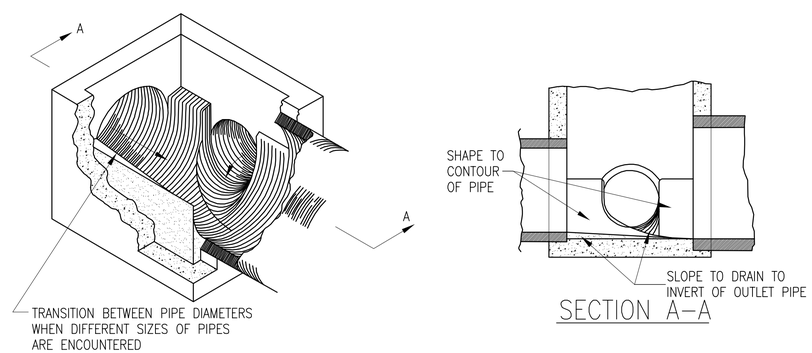

METHOD OF TREATMENT IN DROP INLETS

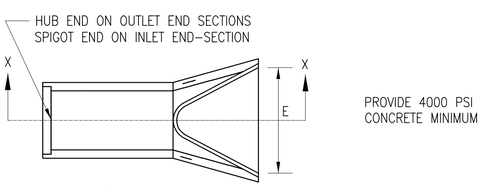

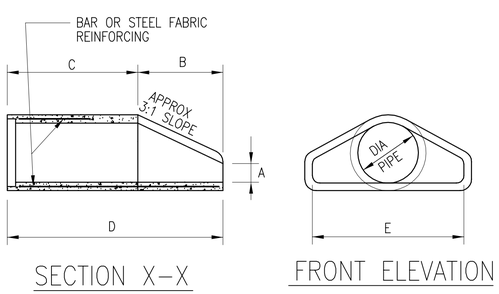

END SECTION DIMENSIONS					
PIPE DIAMETER (IN.)	A	B	C	D	E
15	6"	2'-3"	1'-9"	4'-0"	2'-6"
18	9''	2'-3''	1'-9''	4'-0''	3'-0''
24	9½''	3'-7''	2'-6''	6'-1''	4'-0''

FLARED END SECTION

NTS — CU101, CU103 — A2

STANDARD METHOD OF SHAPING MANHOLE & INLET INVERTS NOTES:

1. SHAPING OF MANHOLE AND INLET INVERTS IN ACCORDANCE WITH THIS DRAWING IS TO APPLY TO THOSE STRUCTURES SPECIFIED ON PLANS OR WHERE INVERT OF PIPE IS ABOVE INVERT OF STRUCTURE.
2. MANHOLE OR DROP INLET IS TO BE FORMED AND CONSTRUCTED IN ACCORDANCE WITH APPLICABLE STANDARD OR SPECIAL DRAWING. THE INVERT SHAPING AS DETAILED HEREON IS TO CONSIST OF A PORTLAND CEMENT CONCRETE MIX CONFORMING TO CLASS A3 OR CLASS C1, EXCEPT THAT 25% OF COARSE AGGREGATE MAY BE BROKEN CONCRETE OR BROKEN CONCRETE BLOCK. THE SURFACE SHALL BE LEFT SMOOTH BY MEANS OF HAND TROWELLING. NONE OF THE COARSE AGGREGATE SHALL REMAIN EXPOSED.
3. DETAILS OF INVERT SHAPING AS SHOWN HEREON ARE FOR EXAMPLE PURPOSES ONLY. EACH MANHOLE OR DROP INLET IS TO BE SHAPED INDIVIDUALLY TO BEST FIT THE PARTICULAR INLET AND OUTLET CONFIGURATION AND FLOW LINES.

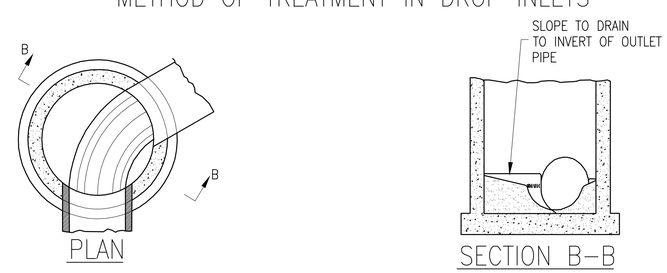

METHOD OF TREATMENT IN MANHOLES

STANDARD METHOD OF SHAPING MANHOLE & INLETS

NTS — CU101, CU103, C104 — A5

SYM	DESCRIPTION	DATE	APPR
	SIGNATURE SUBMITTAL	6/10/2014	

NAVFAC

COMMONWEALTH OF VIRGINIA — JON-MICHAEL C. LEMON — Lic. No. 041993 — 06/10/2014 — PROFESSIONAL ENGINEER — SEAL

PARSONS BRINCKERHOFF
engineering
architecture
277 Bendix Road
Suite 300
Virginia Beach, Virginia
23452
Phone: 757.466.1732
Fax: 757.466.1493

AE LOGO

APPROVED
FOR COMMANDER NAVFAC
ACTIVITY
SATISFACTORY TO DATE

DES	SM	DRW KC	CHK JL
PM	MMP		
BRANCH MANAGER	BDB		
CHIEF ENG/ARCH	RLJ/CRB		
FIRE PROTECTION	DAS		

DEPARTMENT OF THE NAVY
NAVAL FACILITIES ENGINEERING COMMAND
NAVAL FACILITIES ENGINEERING COMMAND ~ MID-ATLANTIC
NAVAL STATION ~ NORFOLK, VIRGINIA
HAMPTON ROADS IPT
NAVAL WEAPONS STATION YORKTOWN, VIRGINIA
P-984 REGIMENTAL HEADQUARTERS
STORM SEWER DETAILS

SCALE: AS NOTED
EPROJECT NO. 1113910
CONSTR. CONTR. NO. N40085-08-D-9739
NAVFAC DRAWING NO. 12664811
SHEET OF
CU512

DRAWFORM REVISION: 6 AUG 2007

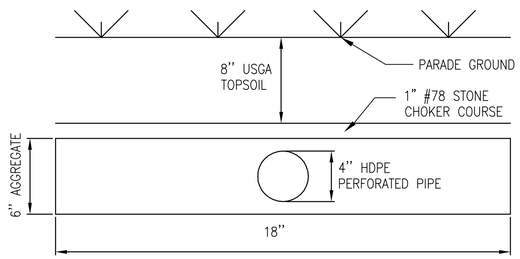

PARADE GROUND

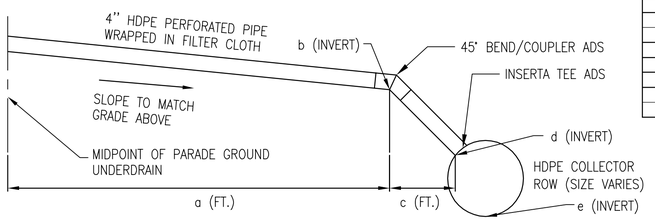

PARADE GROUND UNDERDRAIN

NTS

C2

Underdrain	Finished Grade at Center of Parade Ground (FT)	a (FT)	b (FT)	c (FT)	d (FT)	e (FT)
A1	67.66	211.05	65.77	7.45	58.25	56.75
B1	67.50	211.16	65.61	7.34	58.20	56.70
C1	67.34	211.27	65.45	7.23	58.15	56.65
D1	67.18	211.38	65.29	7.12	58.11	56.61
E1	67.02	211.50	65.13	7.00	58.06	56.56
F1	66.86	211.61	64.97	6.89	58.01	56.51
G1	66.70	211.72	64.81	6.78	57.96	56.46
H1	66.86	211.51	64.97	6.99	57.91	56.41
I1	67.02	211.30	65.13	7.20	57.87	56.37
J1	67.18	211.10	65.29	7.40	57.82	56.32
K1	67.34	210.89	65.45	7.61	57.77	56.27
L1	67.50	210.68	65.61	7.82	57.72	56.22
M1	67.66	210.48	65.77	8.02	57.67	56.17
N1	67.82	210.27	65.94	8.23	57.63	56.13
O1	67.82	210.22	65.93	8.28	57.58	56.08
P1	67.66	210.34	65.77	8.16	57.53	56.03
Q1	67.50	210.45	65.61	8.05	57.48	55.98
R1	67.34	210.56	65.45	7.94	57.43	55.93
S1	67.18	210.67	65.29	7.83	57.39	55.89
T1	67.02	210.78	65.13	7.72	57.34	55.84
U1	66.86	210.89	64.97	7.61	57.29	55.79
V1	66.70	211.00	64.81	7.50	57.24	55.74
W1	66.86	210.80	64.97	7.70	57.19	55.69
X1	67.02	210.59	65.13	7.91	57.15	55.65
Y1	67.18	210.38	65.29	8.12	57.10	55.60
Z1	67.34	210.18	65.45	8.32	57.05	55.55
AA1	67.50	209.97	65.61	8.53	57.00	55.50
BB1	67.66	209.76	65.77	8.74	56.95	55.45

Underdrain	Finished Grade at Center of Parade Ground (FT)	a (FT)	b (FT)	c (FT)	d (FT)	e (FT)
A2	67.66	217.02	65.74	1.48	64.25	62.75
B2	67.50	216.34	65.58	2.16	63.41	61.91
C2	67.34	215.67	65.43	2.83	62.57	61.07
D2	67.18	214.99	65.27	3.51	61.73	60.23
E2	67.02	214.31	65.12	4.19	60.89	59.39
F2	66.86	213.64	64.96	4.86	60.05	58.55
G2	66.70	212.96	64.80	5.54	59.21	57.71
H2	66.86	212.75	64.96	5.75	59.16	57.66
I2	67.02	212.54	65.12	5.96	59.11	57.61
J2	67.18	212.33	65.29	6.17	59.06	57.56
K2	67.34	212.12	65.45	6.38	59.01	57.51
L2	67.50	211.92	65.61	6.58	58.96	57.46
M2	67.66	211.71	65.77	6.79	58.91	57.41
N2	67.82	211.50	65.93	7.00	58.86	57.36
O2	67.82	211.45	65.93	7.05	58.81	57.31
P2	67.66	211.56	65.77	6.94	58.76	57.26
Q2	67.50	211.67	65.61	6.83	58.71	57.21
R2	67.34	211.78	65.44	6.72	58.66	57.16
S2	67.18	211.89	65.28	6.61	58.61	57.11
T2	67.02	212.00	65.12	6.50	58.56	57.06
U2	66.86	212.11	64.96	6.39	58.51	57.01
V2	66.70	212.22	64.80	6.28	58.46	56.96
W2	66.86	211.94	64.96	6.56	58.34	56.84
X2	67.02	211.67	65.13	6.83	58.23	56.73
Y2	67.18	211.39	65.29	7.11	58.11	56.61
Z2	67.34	211.11	65.45	7.39	57.99	56.49
AA2	67.50	210.84	65.61	7.66	57.88	56.38
BB2	67.66	210.57	65.77	7.93	57.77	56.27

PARADE GROUND UNDERDRAIN VARIABLES

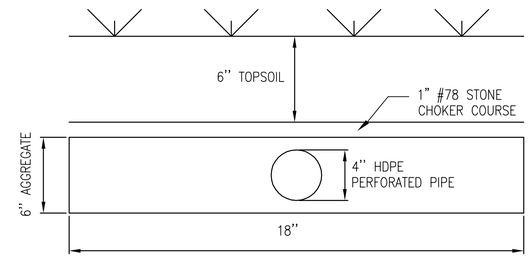

PARKING LOT UNDERDRAIN

NTS

C5

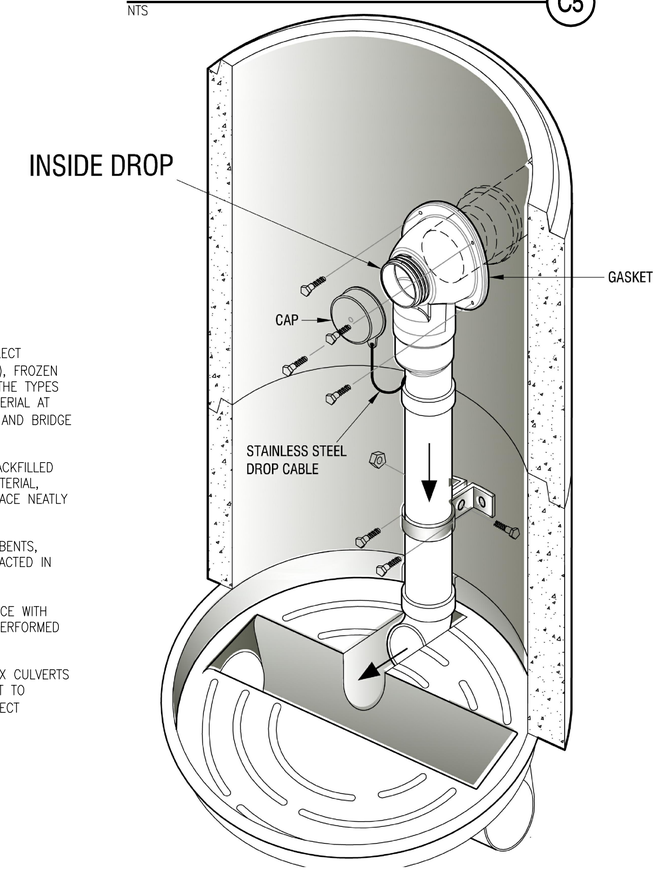

INSIDE DROP MANHOLE

NTS

CU221

A5

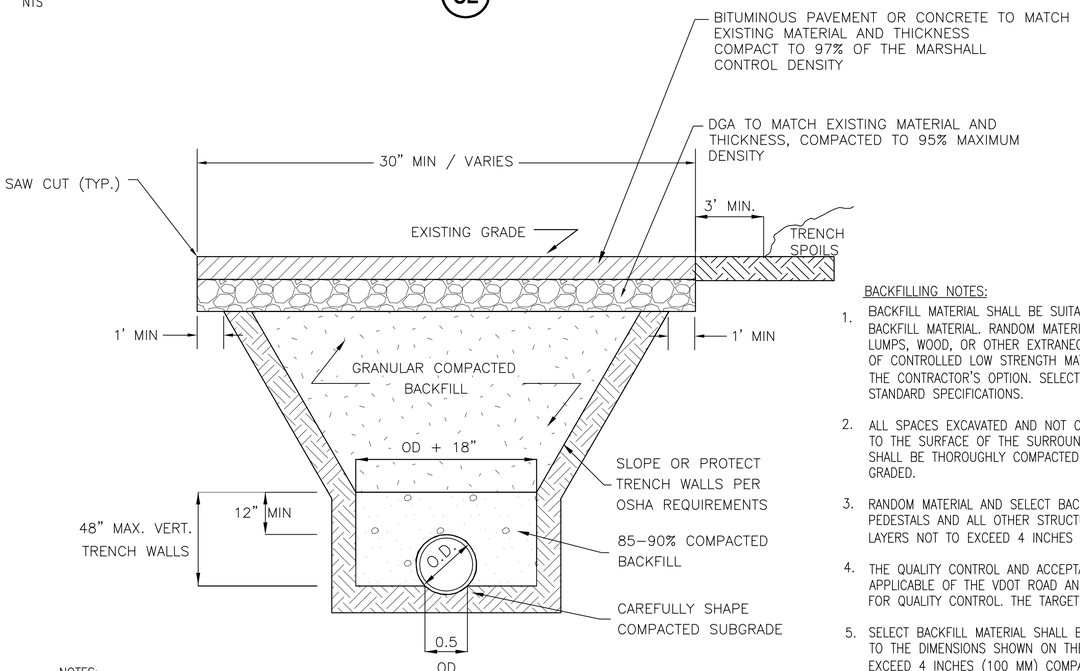

NOTES:

TRENCHING OPERATIONS SHALL CONFORM TO ALL OSHA REQUIREMENTS.

IF THE PIPE DIAMETER EXCEEDS 48", THE MINIMUM 12" COVER SHALL STILL APPLY.

CLASS C BEDDING SHALL BE EXCAVATED OR OVER EXCAVATED, IF NECESSARY, SO A UNIFORM FOUNDATION FREE OF PROTRUDING ROCKS IS PROVIDED.

THIS TRENCH SHALL BE USED ONLY UNDER STABLE SOIL CONDITIONS.

TRENCH DETAIL CLASS C BEDDING

NTS

A2

BACKFILLING NOTES:

1. BACKFILL MATERIAL SHALL BE SUITABLE RANDOM MATERIAL, CONTROLLED LOW STRENGTH MATERIAL OR SELECT BACKFILL MATERIAL. RANDOM MATERIAL SHALL BE FREE FROM PARTICLES LARGER THAN 3 INCHES (75 MM), FROZEN LUMPS, WOOD, OR OTHER EXTRANEOUS MATERIAL. UNLESS OTHERWISE SPECIFIED IN THE PLANS, ANY OF THE TYPES OF CONTROLLED LOW STRENGTH MATERIAL MAY BE USED AND SHALL BE AN ALTERNATIVE TO RANDOM MATERIAL AT THE CONTRACTOR'S OPTION. SELECT BACKFILL MATERIAL SHALL BE IN ACCORDANCE WITH THE VDOT ROAD AND BRIDGE STANDARD SPECIFICATIONS.
2. ALL SPACES EXCAVATED AND NOT OCCUPIED BY ABUTMENTS, PIERS, OR OTHER STRUCTURES SHALL BE BACKFILLED TO THE SURFACE OF THE SURROUNDING GROUND. ALL BACKFILL, EXCEPT CONTROLLED LOW STRENGTH MATERIAL, SHALL BE THOROUGHLY COMPACTED BY ROLLING OR TAMPING AS PRESCRIBED BELOW AND THE TOP SURFACE NEATLY GRADED.
3. RANDOM MATERIAL AND SELECT BACKFILL MATERIAL BEHIND AND AROUND ABUTMENTS, WINGWALLS, PIERS, BENTS, PEDESTALS AND ALL OTHER STRUCTURES, INCLUDING THOSE INACCESSIBLE TO A ROLLER, SHALL BE COMPACTED IN LAYERS NOT TO EXCEED 4 INCHES (100 MM) AFTER COMPACTION.
4. THE QUALITY CONTROL AND ACCEPTANCE FOR COMPACTION OR RANDOM MATERIAL SHALL BE IN ACCORDANCE WITH APPLICABLE OF THE VDOT ROAD AND BRIDGE STANDARD SPECIFICATIONS. FIVE DENSITY TESTS SHALL BE PERFORMED FOR QUALITY CONTROL. THE TARGET PERCENTAGE OF DRY DENSITY SHALL BE 95%.
5. SELECT BACKFILL MATERIAL SHALL BE PLACED BEHIND ABUTMENTS, WINGWALLS, RETAINING WALLS, AND BOX CULVERTS TO THE DIMENSIONS SHOWN ON THE PLANS. THE MATERIAL SHALL BE PLACED IN HORIZONTAL LAYERS NOT TO EXCEED 4 INCHES (100 MM) COMPACTED. THE QUALITY CONTROL TESTING AND ACCEPTANCE FOR THE SELECT BACKFILL SHALL BE IN ACCORDANCE WITH THE VDOT ROAD AND BRIDGE STANDARD SPECIFICATIONS.
6. THE MAXIMUM TRENCH LAYBACK SLOPE IS 2:1
   PROVIDE 1" STEEL PLATE OVER ANY OPEN TRENCH IN AN EXISTING TRAVEL LANE.
7. TRENCH DETAIL APPLY TO BOTH SANITARY SEWER AND WATER LINE INSTALLATION.
8. 18" MINIMUM COVER FOR SANITARY SEWER AND 36" MINIMUM COVER FOR WATER LINE.

SYM	DESCRIPTION	DATE	APPR
	SIGNATURE SUBMITTAL	6/10/2014	

NAVFAC

COMMONWEALTH OF VIRGINIA
JON-MICHAEL C. LEMON
Lic. No. 041993
06/10/2014
PROFESSIONAL ENGINEER
SEAL

PARSONS BRINCKERHOFF
engineering
architecture
277 Bendix Road
Suite 300
Virginia Beach, Virginia
23452
Phone: 757.466.1732
Fax: 757.466.1493
AE LOGO

APPROVED

FOR COMMANDER NAVFAC

ACTIVITY

SATISFACTORY TO DATE

DES SM	DRW KC	CHK JL	
PM	MMP		
BRANCH MANAGER	BDB		
CHIEF ENG/ARCH	RLJ/CRB		
FIRE PROTECTION	DAS		

DEPARTMENT OF THE NAVY
NAVAL FACILITIES ENGINEERING COMMAND ~ MID-ATLANTIC
NAVAL FACILITIES ENGINEERING COMMAND
NAVAL STATION ~ NORFOLK, VIRGINIA
HAMPTON ROADS IPT
NAVAL WEAPONS STATION
YORKTOWN, VIRGINIA
P-984 REGIMENTAL HEADQUARTERS
STORM SEWER DETAILS

SCALE: AS NOTED

EPROJECT NO. 1113910

CONSTR. CONTR. NO. N40085-08-D-9739

NAVFAC DRAWING NO. 12664812

SHEET OF

CU513

DRAWFORM REVISION: 6 AUG 2007

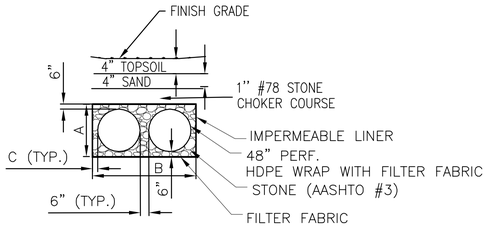

BMP #	ROW	LENGTH (FT)	TOTAL WIDTH (B) (FT)	DEPTH (A) (FT)	PIPE SIZE DIA. (FT)	COVER (FT)	SURFACE ELEV.	SIDE SEPARATION (C) (FT)
BMP H2	4	136	25	5	4	0.75	64.55	3.75

STORMWATER BMP (D2)

NTS CU104

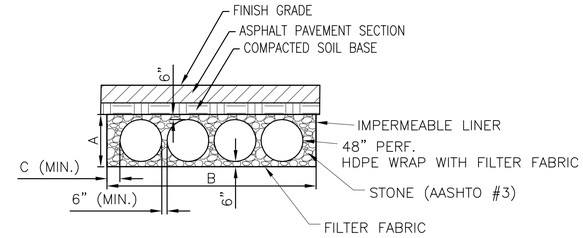

BMP #	ROW	LENGTH (FT)	TOTAL WIDTH (B) (FT)	DEPTH (A) (FT)	PIPE SIZE DIA. (FT)	COVER (FT)	SURFACE ELEV.	SIDE SEPARATION (C) (FT)
BMP H1	8	65	65.50	5	4	2	56.64	15
BMP H3	9 (The 5 center rows extend the full 110-ft. The 4 outer rows, the 2 farthest east and 2 farthest west, extend 50-ft)	See HQ CU104		5	4	3.05	66.75	3.5 FOR 47-FT WIDE SECTION 1.5 FOR 25-FT WIDE SECTION

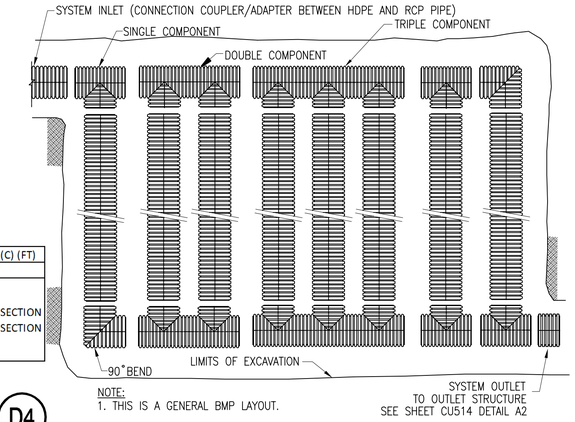

NOTE:
1. THIS IS A GENERAL BMP LAYOUT.

STORMWATER BMP (D4)

NTS CU101, CU104

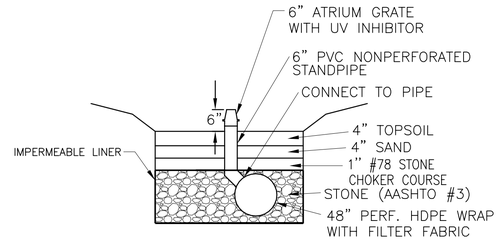

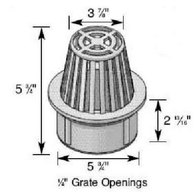

ATRIUM DROP INLET
NTS

OBSERVATION WELL/CLEANOUT (C3)

NTS CU104

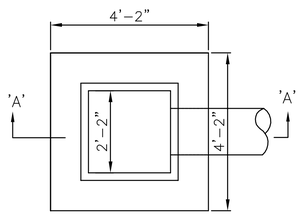

PLAN
NTS

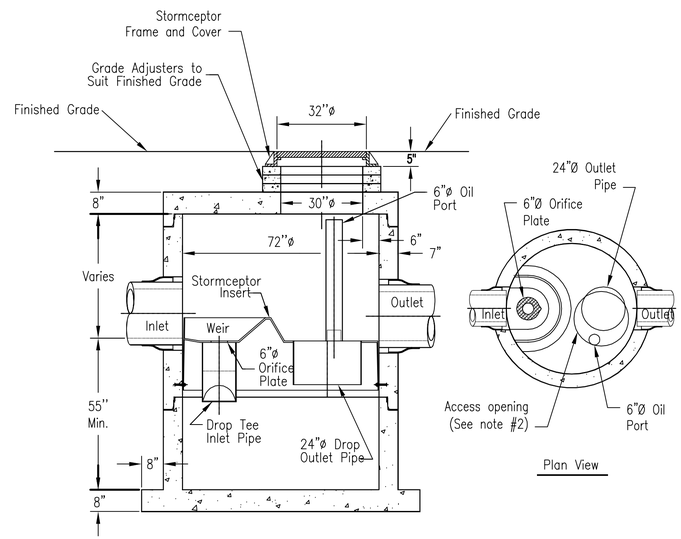

Plan View

Section Thru Chamber

Notes:
1. The Use Of Flexible Connection is Recommended at The Inlet and Outlet Where Applicable.
2. The Cover Should be Positioned Over The Outlet Drop Pipe and The Oil Port.
3. The Stormceptor System is protected by one or more of the following U.S. Patents: #4985148, #5498331, #5725760, #5753115, #5849181, #6068765, #6371690.
4. Contact a Concrete Pipe Division representative for further details not listed on this drawing.

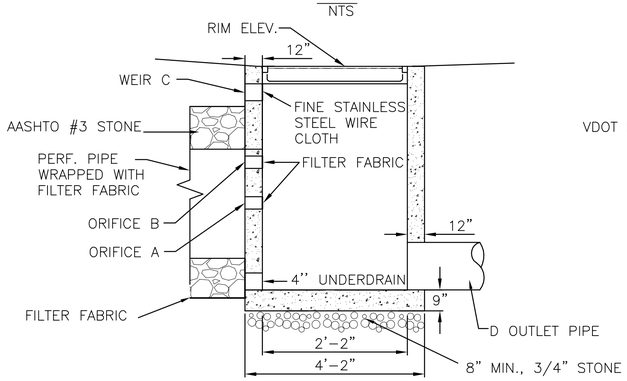

SECTION 'A-A'

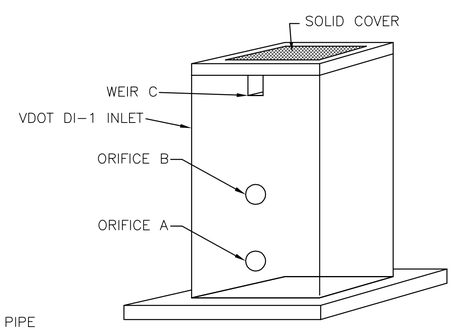

NOTES:

1, OUTLET STRUCTURE WAS MODIFIED FROM VDOT DI-1 STANDARD DROP INLET. ALL HARDWARE AND COVER ARE TO MATCH VDOT SPECIFICATIONS.
2. THE TOP OF WEIR ELEVATION CORRESPONDS TO THE TOP ELEVATION OF THE AASHTO #3 STONE REFERENCED IN THE STORMWATER BMP DETAIL ABOVE.

BMP #	ORIFICE A SIZE (INCHES)	ORIFICE B SIZE (INCHES)	WEIR C WIDTH (FT)	OUTLET PIPE SIZE DIA. (FT)
BMP H1	11	NA	NA	24
BMP H2	6	6	0.5	15
BMP H3	3	8	NA	18

BMP #	GRATE ELEV.	ORIFICE A ELEV.	ORIFICE B ELEV.	WEIR C ELEV.	OUTLET PIPE INVERT ELEV.	UNDERDRAIN PIPE INVERT ELEV.
BMP H1	56.64	51.39	-	-	50.40	50.40
BMP H2	64.55	59.10	59.90	62.80	58.05	58.05
BMP H3	66.75	59.70	61.20	-	59.70	59.70

BMP OUTLET STRUCTURE (A2)

NTS CU101, CU104, CU211

StormCeptor Selection				
BMP -H1	Area (sf)	Area (ac)	Percent Impervious (%)	Stormceptor Model
Stormceptor 1 (west)	14,683	0.34	100	STC-450i
Stormceptor 2 (east)	117,303	2.69	55	STC-3600
BMP- H3				
Stormceptor 1 (west)	50,485	1.16	45	STC-450i
Stormceptor 2 (east)	20,030	0.46	85	STC-900

HYDRODYNAMIC SEPARATOR (A5)

NTS CU101, CU104

SYM	DESCRIPTION	DATE	APPR
	SIGNATURE SUBMITTAL	6/10/2014	

NAVFAC

COMMONWEALTH OF VIRGINIA
JON-MICHAEL C. LEMON
Lic. No. 041993
06/10/2014
PROFESSIONAL ENGINEER
SEAL

PARSONS BRINCKERHOFF
engineering
architecture
277 Bendix Road
Suite 300
Virginia Beach, Virginia
23452
Phone: 757.466.1732
Fax: 757.466.1493
AE LOGO

APPROVED
FOR COMMANDER NAVFAC
ACTIVITY
SATISFACTORY TO DATE

DES CL	DRW KC	CHK JL
PM		MMP
BRANCH MANAGER		BDB
CHIEF ENG/ARCH		RLJ/CRB
FIRE PROTECTION		DAS

DEPARTMENT OF THE NAVY
NAVAL FACILITIES ENGINEERING COMMAND ~ MID-ATLANTIC
NAVAL FACILITIES ENGINEERING COMMAND
NAVAL STATION ~ NORFOLK, VIRGINIA
HAMPTON ROADS IPT
NAVAL WEAPONS STATION
YORKTOWN, VIRGINIA
P-984 REGIMENTAL HEADQUARTERS
STORM BMP DETAILS

SCALE: AS NOTED
EPROJECT NO. 1113910
CONSTR. CONTR. NO. N40085-08-D-9739
NAVFAC DRAWING NO. 12664813
SHEET OF
CU514
DRAWFORM REVISION: 6 AUG 2007

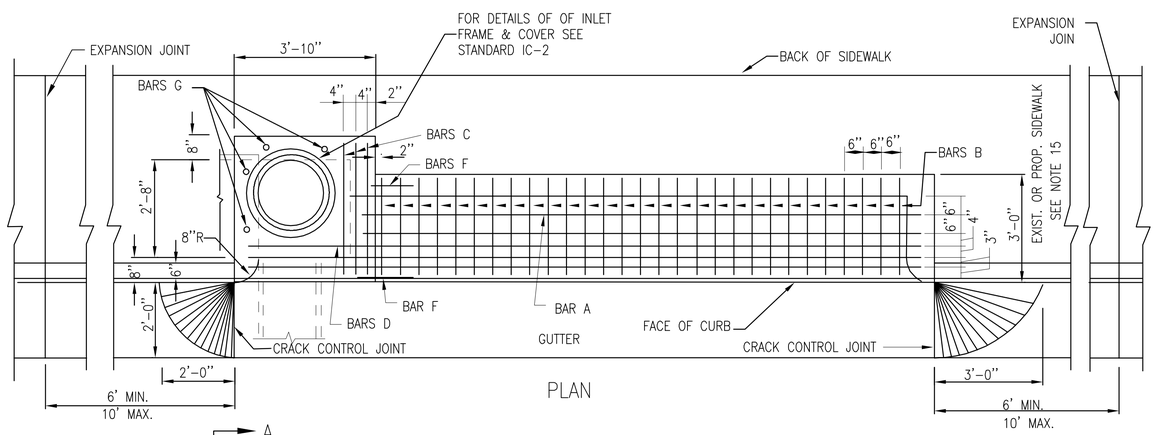

PLAN

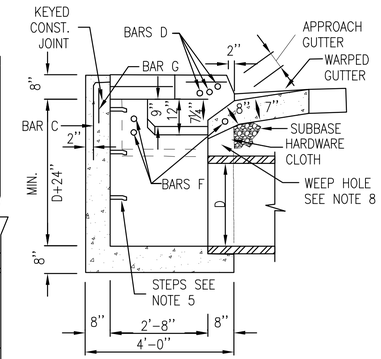

SECTION A–A

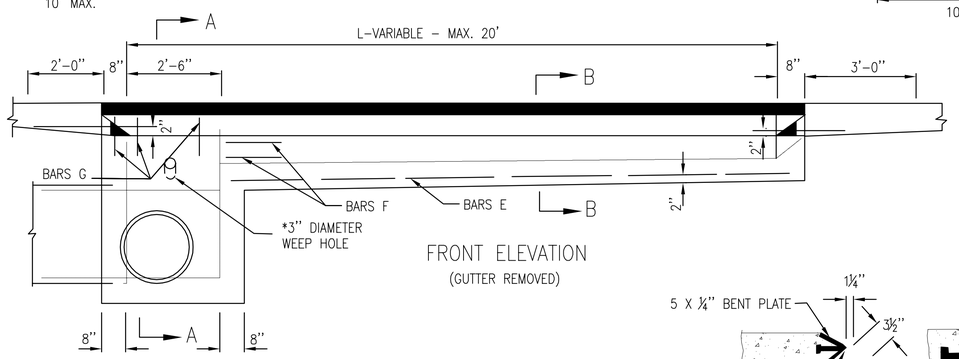

FRONT ELEVATION
(GUTTER REMOVED)

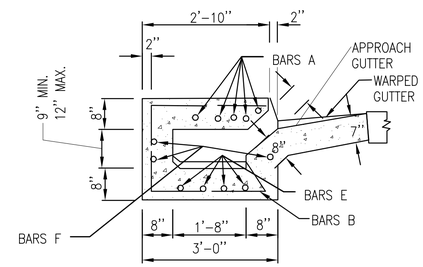

SECTION B–B

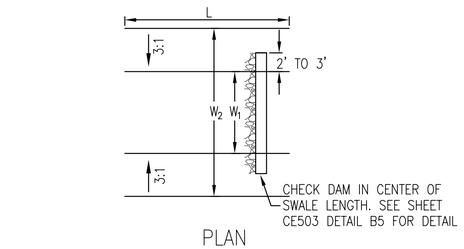

PLAN

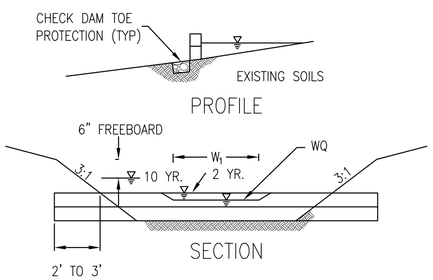

TYPE A A NOSE DETAIL SHALL BE USED WITH CG-3 & CG-7 STANDARDS.

TYPE B NOSE DETAIL SHALL BE USED WITH CG-2 STANDARDS.

GALVANIZED PLATE FOR TYPE A TO BE BENT ON AN ANGLE OF 68°30' CONNECTORS AND IS TO BE ANCHORED WITH ½" X 4" STUD SHEAR WELDED TO BENT PLATE AT 2' C-C.

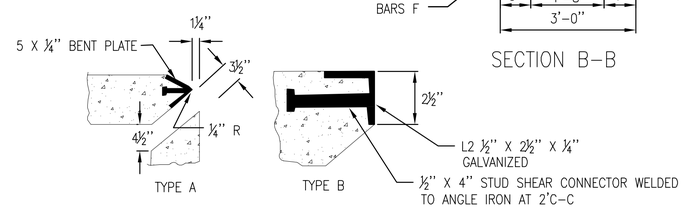

NOSE DETAILS

	W1 (ft)	W2 (ft)	Slope (%)	WQ (Water Quality Depth, ft)	2 YR. (2 yr. Depth, ft)	10 YR. (10 yr. Depth, ft)
Grass Swale 1	2.00	12.20	2.36	0.19	0.86	1.20
Grass Swale 2	6.00	15.12	2.19	0.17	0.71	1.02

GRASS SWALE

NTS CU103 B5

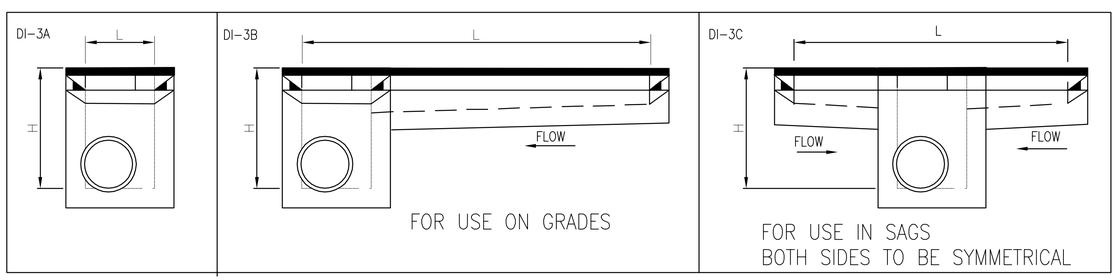

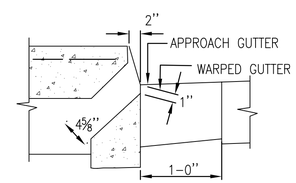

DETAIL WHEN USED ADJACENT TO CURB WITHOUT GUTTER

STANDARD CURB DROP INLET

NTS CU104 A2

SYM	DESCRIPTION	DATE	APPR
	SIGNATURE SUBMITTAL	6/10/2014	

NAVFAC

COMMONWEALTH OF VIRGINIA
JON-MICHAEL C. LEMON
Lic. No. 041993
06/10/2014
PROFESSIONAL ENGINEER
SEAL

PARSONS BRINCKERHOFF
engineering
architecture
277 Bendix Road
Suite 300
Virginia Beach, Virginia
23452
Phone: 757.466.1732
Fax: 757.466.1493

AE LOGO

APPROVED

FOR COMMANDER NAVFAC

ACTIVITY

SATISFACTORY TO DATE

DES SM DRW KC CHK JL
PM MMP
BRANCH MANAGER BDB
CHIEF ENG/ARCH RLJ/CRB
FIRE PROTECTION DAS

DEPARTMENT OF THE NAVY
NAVAL FACILITIES ENGINEERING COMMAND ~ MID-ATLANTIC
HAMPTON ROADS IPT
NAVAL FACILITIES ENGINEERING COMMAND
NAVAL STATION ~ NORFOLK, VIRGINIA
NAVAL WEAPONS STATION
YORKTOWN, VIRGINIA
P-984 REGIMENTAL HEADQUARTERS
STORM SEWER & BMP DETAILS

SCALE: AS NOTED
EPROJECT NO. 1113910
CONSTR. CONTR. NO. N40085-08-D-9739
NAVFAC DRAWING NO. 12664814
SHEET OF
CU515

DRAWFORM REVISION: 8 AUG 2007

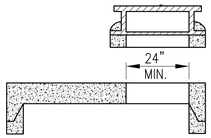

FLAT SLAB TOP

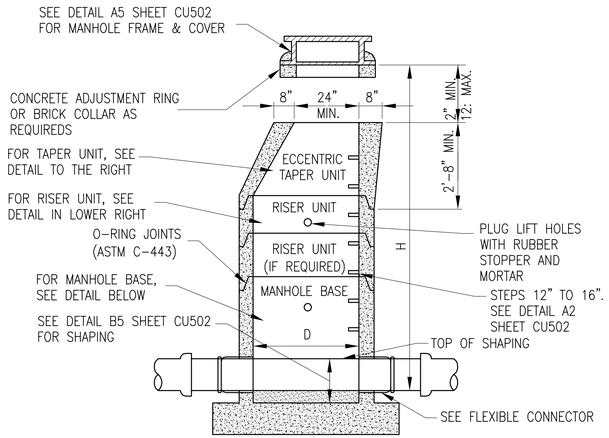

PRECAST CONCRETE MANHOLE

NOTES:

1. STEPS SHALL BE ENCASED IN CORROSION RESISTANT RUBBER OR AN APPROVED EQUAL.

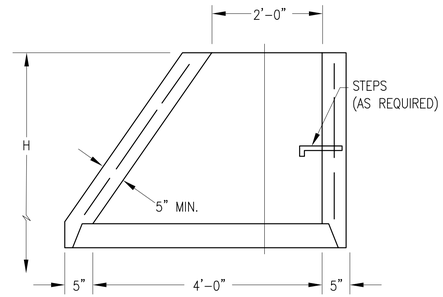

PRECAST MANHOLE TOP UNIT NOTES:

1. ALL SPACER UNITS AND ARE TAPER UNITS ARE TO BE IN ACCORDANCE WITH THE REQUIREMENTS OF AASHTO M199.
2. DIMENSION SHOWN ARE MINIMUM. ACTUAL DIMENSIONS MAY VARY WITH MANUFACTURER.
3. SPACER UNITS SHOWN HEREON ARE ALSO KNOWN AS "GRADE RINGS" OR ADJUSTMENT RINGS".
4. WHEN SPACER UNITS ARE REQUIRED, "H" IS TO BE MEASURED FROM THE TOP OF THE UPPERMOST SPACER.
5. SPACER UNIT IS TO BE DOWELED OR MORTARED TO TAPER UNIT OR FLAT SLAB TOP.

ECCENTRIC TAPER UNIT

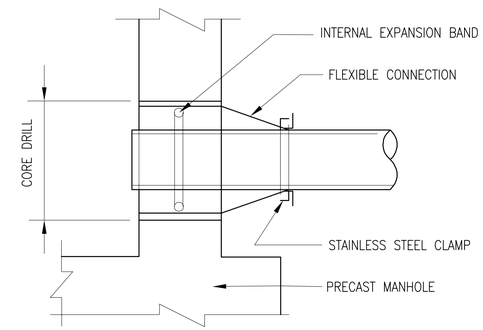

FLEXIBLE CONNECTOR

FLEXIBLE CONNECTOR NOTES:

PIPE TO PRECAST MANHOLE CONNECTIONS SHALL BE MADE WITH A FLEXIBLE BOOT. THE BOOT SHALL MEET ASTM SPECIFICATION C-923 AND CONSIST OF NEOPRENE RUBBER, EPDM RUBBER, OR POLYISOPRENE RUBBER, WHERE PREFERENCE MAY BE GIVEN TO A CERTAIN MATERIAL IN PROJECT SPECIFIC INSTANCES. THE INTERNAL EXPANSION BAND TO SECURE THE BOOT IN PLACE SHALL BE COMPOSED OF STAINLESS STEEL OR A NON-METALLIC MATERIAL. THE EXTERNAL BAND TO CLAMP AND SEAL THE BOOT TO THE PIPE SHALL BE CORROSION RESISTANT STAINLESS STEEL CONFORMING TO ASTM SPECIFICATION A-167. THE PORT TO RECEIVE THE BOOT SHALL BE CORE DRILLED AND SHOULD BE MANUFACTURED TO ALLOW FOR LATERAL AND VERTICAL MOVEMENT. ALL FIELD INSTALLATION OF PIPE THRU MANHOLE SEAL SHALL BE DONE IN ACCORDANCE WITH THE MANUFACTURER'S RECOMMENDATIONS AND SPECIFICATIONS.

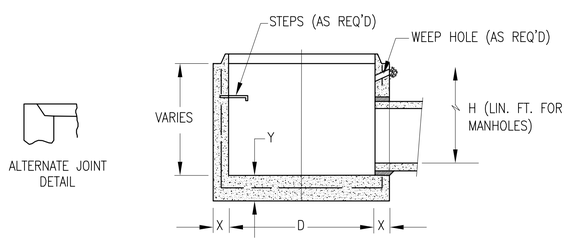

ALTERNATE JOINT DETAIL

PRECAST MANHOLE BASE UNIT NOTES:

1. ALL BASE UNITS ARE TO BE IN ACCORDANCE WITH THE REQUIREMENTS OR AASHTO M199
2. WHERE OPENINGS ARE REQUIRED FOR PIPE, THEY SHALL BE FORMED, DRILLED, OR NEATLY CUT AS APPROVED BY THE ENGINEER. THE CONTRACTOR SHALL FURNISH THE FABRICATOR WITH THE ANGLES BETWEEN CENTER LINES, THE INVERT ELEVATIONS, AND THE SIZE OF ALL PIPES TO ENTER THE MANHOLE. HOLES ARE TO BE A MINIMUM OF 4" TO A MAXIMUM OF 8" LARGER THAN THE OUTSIDE DIAMETER OF THE PROPOSED SITE.
3. DIMENSIONS SHOWN ARE MINIMUM. ACTUAL DIMENSIONS MAY VARY WITH MANUFACTURER.
4. "D" IS NOMINAL DIAMETER.
5. TONGUE AND GROOVE JOINT ARE TO BE OR FABRICATOR'S DESIGN MEETING VDOT APPROVAL. JOINTS ARE TO BE SEALED WITH MORTAR, O-RING GASKETS, OR BUTYL RUBBER.

DIMENSIONS				
D	X MINIMUM	Y MINIMUM	SUGGESTED MAX. PIPE SIZE	ABSOLUTE MAXIMUM
48"	5"	6"	24"	27"

STANDARD PRECAST MANHOLE BASE UNITS

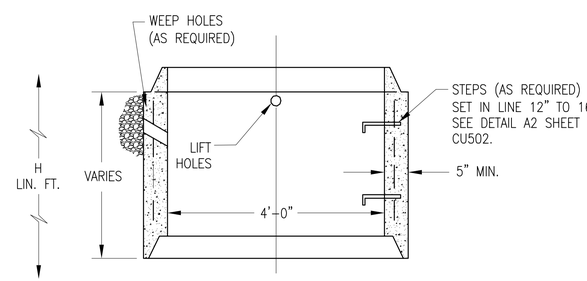

PRECAST MANHOLE RISER UNIT NOTES:

1. ALL RISER UNITS ARE TO BE IN ACCORDANCE WITH THE REQUIREMENTS OR AASHTO M199
2. WHERE OPENINGS ARE REQUIRED FOR PIPE, THEY SHALL BE FORMED, DRILLED, OR NEATLY CUT AS APPROVED BY THE ENGINEER. THE CONTRACTOR SHALL FURNISH THE FABRICATOR WITH THE ANGLES BETWEEN CENTER LINES, THE INVERT ELEVATIONS, AND THE SIZE OF ALL PIPES TO ENTER THE MANHOLE.
3. DIMENSIONS SHOWN ARE MINIMUM. ACTUAL DIMENSIONS MAY VARY WITH MANUFACTURER.
4. "D" IS NOMINAL DIAMETER.
5. TONGUE AND GROOVE JOINT ARE TO BE OR FABRICATOR'S DESIGN MEETING VDOT APPROVAL. JOINTS ARE TO BE SEALED WITH MORTAR, O-RING GASKETS, OR BUTYL RUBBER.

STANDARD PRECAST MANHOLE RISER UNITS

PRECAST SANITARY MANHOLE

NTS

CU104 A4

SYM	DESCRIPTION	DATE	APPR
	SIGNATURE SUBMITTAL	6/10/2014	

NAVFAC

COMMONWEALTH OF VIRGINIA
JON-MICHAEL C. LEMON
Lic. No. 041993
06/10/2014
PROFESSIONAL ENGINEER
SEAL

PARSONS BRINCKERHOFF
engineering
architecture
277 Bendix Road
Suite 300
Virginia Beach, Virginia
23452
Phone: 757.466.1732
Fax: 757.466.1493

AE LOGO

APPROVED

FOR COMMANDER NAVFAC

ACTIVITY

SATISFACTORY TO DATE

DES	CL	DRW KC	CHK JL
PM	MMP		
BRANCH MANAGER	BDB		
CHIEF ENG/ARCH	RLJ/CRB		
FIRE PROTECTION	DAS		

DEPARTMENT OF THE NAVY
NAVAL FACILITIES ENGINEERING COMMAND
NAVAL FACILITIES ENGINEERING COMMAND ~ MID-ATLANTIC
HAMPTON ROADS IPT
NAVAL STATION ~ NORFOLK, VIRGINIA
NAVAL WEAPONS STATION
YORKTOWN, VIRGINIA
P-984 REGIMENTAL HEADQUARTERS
SANITARY SEWER DETAILS

SCALE:	AS NOTED
EPROJECT NO.	1113910
CONSTR. CONTR. NO.	N40085-08-D-9739
NAVFAC DRAWING NO.	12664816
SHEET	OF

CU521

DRAWFORM REVISION: 6 AUG 2007

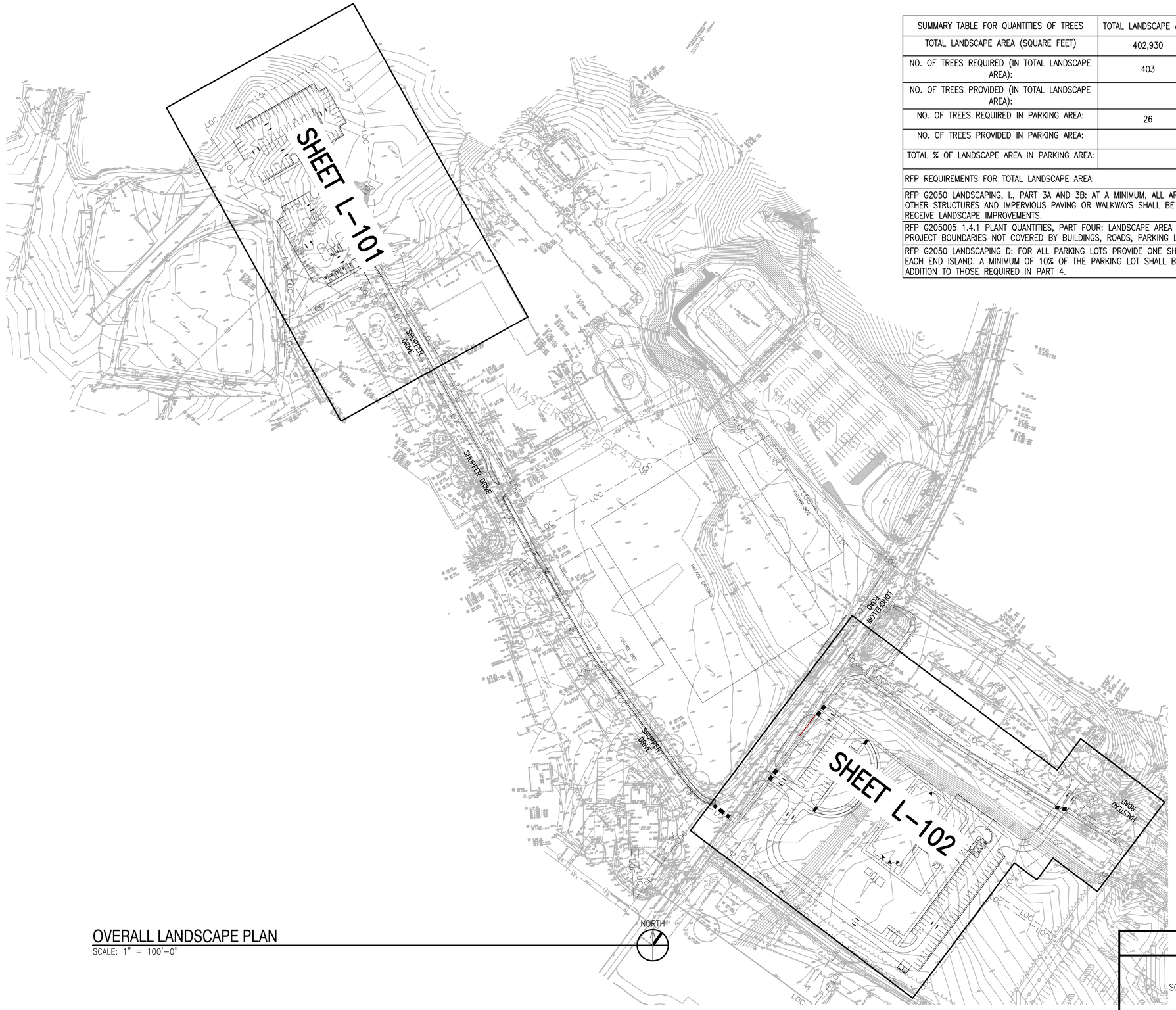

SUMMARY TABLE FOR QUANTITIES OF TREES	TOTAL LANDSCAPE AREA	P-984 HQ	P-985 BEQ	
TOTAL LANDSCAPE AREA (SQUARE FEET)	402,930			SF
NO. OF TREES REQUIRED (IN TOTAL LANDSCAPE AREA):	403			TOTAL
NO. OF TREES PROVIDED (IN TOTAL LANDSCAPE AREA):		236	163	TOTAL
NO. OF TREES REQUIRED IN PARKING AREA:	26			TOTAL
NO. OF TREES PROVIDED IN PARKING AREA:		27	21	TOTAL
TOTAL % OF LANDSCAPE AREA IN PARKING AREA:				%
RFP REQUIREMENTS FOR TOTAL LANDSCAPE AREA:				
RFP G2050 LANDSCAPING, I., PART 3A AND 3B: AT A MINIMUM, ALL AREAS OF THE SITE NOT COVERED BY BUILDINGS OR OTHER STRUCTURES AND IMPERVIOUS PAVING OR WALKWAYS SHALL BE CONSIDERED TOTAL LANDSCAPE AREA AND THEREFORE, RECEIVE LANDSCAPE IMPROVEMENTS.				
RFP G205005 1.4.1 PLANT QUANTITIES, PART FOUR: LANDSCAPE AREA IS DEFINED AS ALL PERMEABLE AREAS WITHIN THE PROJECT BOUNDARIES NOT COVERED BY BUILDINGS, ROADS, PARKING LOTS, SIDEWALKS, AND OTHER NON-PERMEABLE AREAS.				
RFP G2050 LANDSCAPING D: FOR ALL PARKING LOTS PROVIDE ONE SHADE TREE FOR EVERY 10 PARKING SPACES AND IN EACH END ISLAND. A MINIMUM OF 10% OF THE PARKING LOT SHALL BE LANDSCAPED. TREES IN THE PARKING LOT ARE IN ADDITION TO THOSE REQUIRED IN PART 4.				

OVERALL LANDSCAPE PLAN

SCALE: 1" = 100'-0"

GRAPHIC SCALE

SCALE: 1" = 100'-0" 0 50' 100' 200'

SYM	DESCRIPTION	DATE	APPR

NAVFAC

STATE OF MARYLAND — DAVID LEE PATTERSON — No. 894 — REGISTERED LANDSCAPE ARCHITECT

AUGUST 22, 2014 SEAL

PARSONS BRINCKERHOFF
engineering
architecture
277 Bendix Road
Suite 300
Virginia Beach, Virginia
23452
Phone: 757.466.1732
Fax: 757.466.1493
AE LOGO

APPROVED

FOR COMMANDER NAVFAC

ACTIVITY

SATISFACTORY TO DATE

DES PB DRW PB CHK PB

PM MMP

BRANCH MANAGER BDB

CHIEF ENG/ARCH RLJ/CRB

FIRE PROTECTION DAS

DEPARTMENT OF THE NAVY
NAVAL FACILITIES ENGINEERING COMMAND
HAMPTON ROADS IPT
NAVAL FACILITIES ENGINEERING COMMAND ~ MID-ATLANTIC
NAVAL STATION - NORFOLK, VIRGINIA
NAVAL WEAPONS STATION
YORKTOWN, VIRGINIA

P-984 REGIMENTAL HEADQUARTERS

OVERALL LANDSCAPE PLAN

SCALE: AS NOTED

EPROJECT NO. 1113910

CONSTR. CONTR. NO. N40085-08-D-9739

NAVFAC DRAWING NO. 12664825

SHEET 10 OF 573

L-100

DRAWFORM REVISION: 6 AUG 2007

8/25/2014 12:11 pm

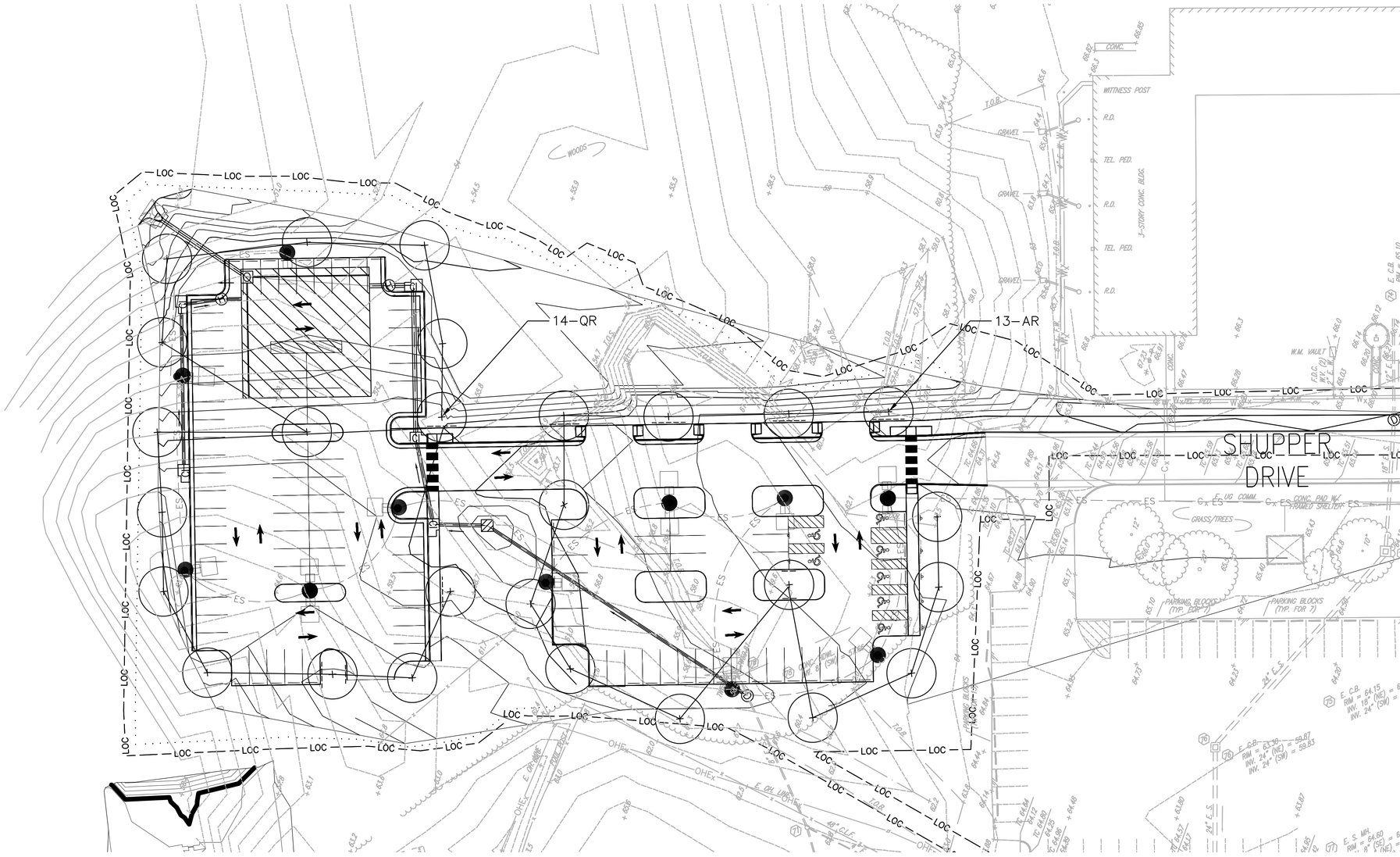

LANDSCAPE PLAN - PARKING

SCALE: 1" = 30'–0"

NORTH

LEGEND

	RIVER ROCK
	GROUNDCOVER/ORNAMENTAL GRASS
	CONCRETE UNIT PAVER PAVING
	BENCH
	TRASH RECEPTACLE
	BIKE RACK
	PICNIC TABLE
	SHELTER
— LOC —	LIMIT OF CONSTRUCTION/ LIMIT OF SOD
13–AR	QUANTITY AND PLANT NAME– REFERENCE SHEET L–501 FOR PLANT SCHEDULE
-------	ROOT CONTROL BARRIER

KEY PLAN

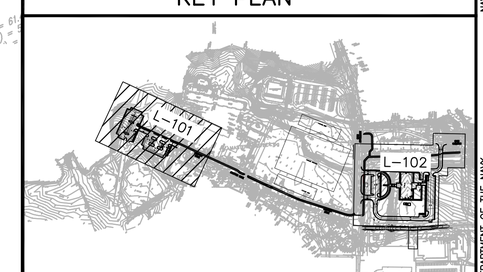

GRAPHIC SCALE

SCALE: 1" = 30'–0" 0 15' 30' 60'

MAS	DESCRIPTION	DATE	APPR

NAVFAC

STATE OF MARYLAND — MARK LEE PATTERSON — No. 884 — REGISTERED LANDSCAPE ARCHITECT

AUGUST 22, 2014 SEAL

PARSONS BRINCKERHOFF
engineering
architecture
277 Bendix Road
Suite 300
Virginia Beach, Virginia
23452
Phone: 757.466.1732
Fax: 757.466.1493

AE LOGO

APPROVED

FOR COMMANDER NAVFAC

ACTIVITY

SATISFACTORY TO DATE

DES	PB	DRW	PB	CHK	PB
PM	MMP				
BRANCH MANAGER	BDB				
CHIEF ENG/ARCH	RLJ/CRB				
FIRE PROTECTION	DAS				

DEPARTMENT OF THE NAVY
NAVAL FACILITIES ENGINEERING COMMAND
HAMPTON ROADS IPT

NAVAL FACILITIES ENGINEERING COMMAND ~ MID-ATLANTIC
NAVAL STATION – NORFOLK, VIRGINIA

NAVAL WEAPONS STATION
YORKTOWN, VIRGINIA

P-984 REGIMENTAL HEADQUARTERS

LANDSCAPE PLAN – PARKING

SCALE:	AS NOTED
EPROJECT NO.	1113910
CONSTR. CONTR. NO.	N40085–08–D–9739
NAVFAC DRAWING NO.	12664826
SHEET	11 OF 573

L-101

DRAWFORM REVISION: 6 AUG 2007

8/25/2014 12:10 pm

GENERAL NOTES:

1. EXISTING UTILITIES AND OBSTRUCTIONS SHOWN ON THESE PLANS ARE FROM THE BEST AVAILABLE RECORDS. VERIFY PRIOR TO CONSTRUCTION.
2. CALL 'MISS UTILITY' PRIOR TO THE COMMENCEMENT OF PLANTING OPERATIONS.
3. MAKE REPAIRS OR REPLACEMENT TO UTILITIES OR PROPERTY DAMAGED AS A RESULT OF NEGLIGENCE, OR METHOD OF OPERATION, TO THE SATISFACTION OF THE CONTRACTING OFFICER.
4. PERFORM WORK IN A MANNER THAT WILL ENSURE SAFETY OF THE GENERAL PUBLIC, EMPLOYEES AND THE CONTRACTING OFFICER AND OWNER.
5. LAYOUT PLANTING FOR APPROVAL BY THE CONTRACTING OFFICER PRIOR TO THE COMMENCEMENT OF PLANTING OPERATIONS.
6. COORDINATE PLANTING PLAN WITH OTHER ELEMENTS OF WORK PERFORMED UNDER THE PROJECT, INCLUDING BUT NOT LIMITED TO FINAL GRADING, TOPSOIL PLACEMENT, TURF ESTABLISHMENT, UTILITIES, AND SIGNING/LIGHTING; INSTALLATION APPEARANCE PLAN, NAVAL WEAPONS STATION YORKTOWN, APRIL 18, 2008; LEED GREEN BUILDING RATING SYSTEM, 2009 v3; AND UNIFIED FACILITIES CRITERIA UFC 3-201-02 LANDSCAPE ARCHITECTURE.
7. PLACE TOPSOIL AND SOD IN ACCORDANCE WITH THE ENGINEERING AND LANDSCAPE PLANS AND SPECIFICATIONS; AND THE UFGS PERFORMANCE TECHNICAL SPECIFICATIONS, INCLUDING SECTION NUMBER 32 05 33 LANDSCAPE ESTABLISHMENT AND SECTION NUMBER 32 92 23 SODDING.
8. PLACE PLANT MATERIAL IN ACCORDANCE WITH THE LANDSCAPE PLANS; AND THE UFGS PERFORMANCE TECHNICAL SPECIFICATIONS, INCLUDING SECTION NUMBER 32 05 33 LANDSCAPE ESTABLISHMENT AND SECTION NUMBER 32 93 00 EXTERIOR PLANTS.
9. PROVIDE COMPLETE LANDSCAPING MAINTENANCE, INCLUDING ROUTINE MOWING, FOR ONE FULL GROWING SEASON AFTER COMPLETION OF PLANTING.
10. PROVIDE TREES AT THE MINIMUM SIZE INDICATED ON THE PLANT SCHEDULE, BALLED AND BURLAPPED, AND GROWN AT A NURSERY FROM WITHIN 150 MILES OF THE PROJECT SITE.
11. TAG LANDSCAPE MATERIALS DELIVERED TO THE SITE WITH A PLANT IDENTIFICATION TAG FROM THE NURSERY INDICATING SPECIES AND COMMON NAME. STORE IN A SHADED AREA AS DIRECTED BY THE CONTRACTING OFFICER AND HEEL IN WITH STRAW MULCH. COVER ROOT BALLS WITH UP TO 4 INCHES OF STRAW MULCH AND WATER DAILY UNTIL PLANTED.
12. STORE LANDSCAPING MATERIAL ON SITE FOR NO MORE THAN THREE WEEKS. REJECT MATERIALS STORED FOR MORE THAN THREE WEEKS.
13. MAINTAIN AND WARRANTY PLANT MATERIALS FOR ONE YEAR FROM THE TIME OF PROJECT ACCEPTANCE.
14. PLANT MATERIAL TO COMPLY WITH ANSI Z60.1 INCLUDING MINIMUM ROOT BALL SIZE, MINIMUM HEIGHT, AND MINIMUM STEMS FOR MULTI-STEM PLANTS.
15. PROVIDE SITE FURNISHINGS BY THE MANUFACTURERS SPECIFIED IN THE SCHEDULE OF SITE FURNISHINGS IN UFGS PERFORMANCE TECHNICAL SPECIFICATION SECTION NUMBER 12 93 00 SITE FURNISHINGS. PER RFP, ANCHOR SITE FURNISHINGS TO THE CONCRETE FOOTINGS BELOW.
16. FOR LIMIT OF CONSTRUCTION FOR P-984, REFERENCE SITE/CIVIL EROSION AND SEDIMENT CONTROL AND GRADING PLANS.
17. PER G205004: "AREAS INDICATED TO BE TURF SHALL BE SODDED. PROVIDE SOD AND FERTILIZE EXISTING GRASS AREAS DISTURBED BY CONTRACTOR OPERATIONS." FOR LIMIT OF CONSTRUCTION/LIMIT OF SOD FOR P-984, REFERENCE SITE/CIVIL EROSION AND SEDIMENT CONTROL AND GRADING PLANS.
18. FOR SUMMARY TABLE FOR QUANTITIES OF TREES PER RFP PART 3 G2050 (m), REFERENCE SHEET L-100.
19. PROVIDE ROOT CONTROL BARRIER FOR TREES WITHIN 8 FEET OF HARDSCAPE (SIDEWALK, CURB AND GUTTER, RETAINING WALL).

MASTER PLANT SCHEDULE

SYMBOL	TOTAL QUANTITY	SHEET L-101	SHEET L-102	BOTANICAL NAME	COMMON NAME	SIZE	ROOT TYPE	COMMENTS
SHADE TREES WITHIN ATFP								
QR1	4		4	QUERCUS RUBRA	RED OAK	4" CAL.	B&B	
SHADE TREES								
AR	58	13	45	ACER RUBRUM 'RED SUNSET'	RED SUNSET RED MAPLE	3" CAL.	B&B	
BN	17		17	BETULA NIGRA 'HERITAGE'	HERITAGE RIVER BIRCH	3" CAL.	B&B	MULTI-STEM
QR	41	14	27	QUERCUS RUBRA	RED OAK	3" CAL.	B&B	
QS	11		11	QUERCUS SHUMARDII	SHUMARD OAK	3" CAL.	B&B	
FLOWERING TREES								
AA	12		12	AMELANCHIER ARBOREA 'SNOWCLOUD'	SNOWCLOUD SERVICEBERRY	8' HT.	B&B	MULTI-STEM
CC	6		6	CERCIS CANADENSIS	EASTERN REDBUD	2" CAL.	B&B	
CF	29		29	CORNUS FLORIDA 'CHEROKEE PRINCESS'	CHEROKEE PRINCESS DOGWOOD	2" CAL.	B&B	
MV	6		6	MAGNOLIA VIRGINIANA	SWEETBAY MAGNOLIA	8' HT.	B&B	MULTI-STEM
EVERGREEN TREES								
IOK	3		3	ILEX OPACA 'JERSEY KNIGHT'	JERSEY KNIGHT AMERICAN HOLLY	10' HT.	B&B	
IOP	11		11	ILEX OPACA 'JERSEY PRINCESS'	JERSEY PRINCESS AMERICAN HOLLY	10' HT.	B&B	
JV	22		22	JUNIPERUS VIRGINIANA	EASTERN REDCEDAR	10' HT.	B&B	
MG	16		16	MAGNOLIA GRANDIFLORA 'LITTLE GEM'	LITTLE GEM SOUTHERN MAGNOLIA	10' HT.	B&B	
SHRUBS								
IGS	68		68	ILEX GLABRA 'SHAMROCK'	SHAMROCK INKBERRY	3 GAL.	CONT.	4' O.C. TYP.
IGC	17		17	ILEX GLABRA 'COMPACTA'	DWARF INKBERRY	3 GAL.	CONT.	6' O.C. TYP.
GROUNDCOVER AND ORNAMENTAL GRASSES								
JH	23		23	JUNIPERUS HORIZONTALIS 'WILTONI'	BLUE RUG JUNIPER	1 GAL.	CONT.	6' O.C. TYP.
LM	187		187	LIRIOPE SPICATA	CREEPING LILY TURF	1 GAL.	CONT.	18" O.C. TYP.
PA	123		123	PENNISETUM ALOPECUROIDES 'LITTLE BUNNY'	LITTLE BUNNY FOUNTAIN GRASS	1 GAL.	CONT.	12" O.C. TYP.

167.6 SY RIVER STONE
365.4 SY MULCH
506.3 LF STEEL EDGING
465.9 SY WEED CONTROL FABRIC

SYM	DESCRIPTION	DATE	APPR.

NAVFAC

STATE OF MARYLAND — DAVID LEE PATTERSON — No. 804 — REGISTERED LANDSCAPE ARCHITECT

AUGUST 22, 2014 SEAL

PARSONS BRINCKERHOFF
engineering
architecture
277 Bendix Road
Suite 300
Virginia Beach, Virginia
23452
Phone: 757.466.1732
Fax: 757.466.1493
AE LOGO

APPROVED

FOR COMMANDER NAVFAC

ACTIVITY

SATISFACTORY TO DATE

DES PB DRW PB CHK PB
PM MMP
BRANCH MANAGER BDB
CHIEF ENG/ARCH RLJ/CRB
FIRE PROTECTION DAS

DEPARTMENT OF THE NAVY
NAVAL FACILITIES ENGINEERING COMMAND ~ MID-ATLANTIC
HAMPTON ROADS IPT
NAVAL FACILITIES ENGINEERING COMMAND
NAVAL STATION - NORFOLK, VIRGINIA
NAVAL WEAPONS STATION YORKTOWN, VIRGINIA
P-984 REGIMENTAL HEADQUARTERS
LANDSCAPE SCHEDULE AND NOTES

SCALE: AS NOTED
EPROJECT NO. 1113910
CONSTR. CONTR. NO. N40085-08-D-9739
NAVFAC DRAWING NO. 12664828
SHEET 13 OF 573

L-501

DRAWFORM REVISION: 6 AUG 2007

8/25/2014 4:41 pm

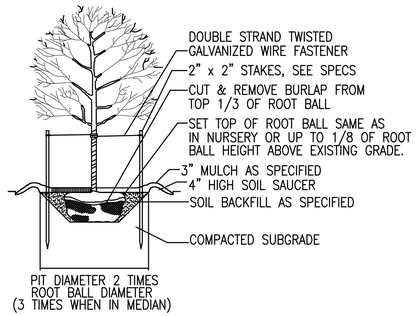

TYPICAL TREE PLANTING IN LAWN AREAS (D1)

SCALE: NTS — GENERAL

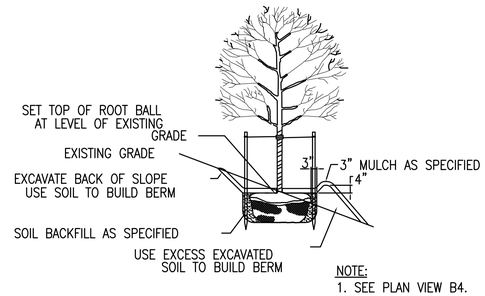

NOTE:
1. SEE PLAN VIEW B4.

TYPICAL TREE PLANTING ON SLOPE (D3)

SCALE: NTS — GENERAL

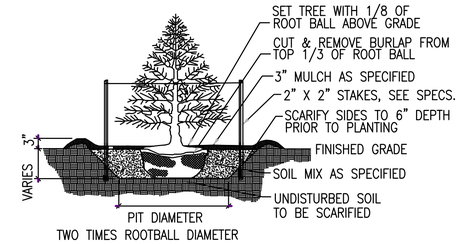

TYPICAL EVERGREEN TREE PLANTING (D4)

SCALE: NTS — GENERAL

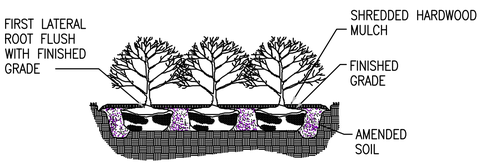

SHRUB PLANTING DETAIL (B1)

SCALE: NTS — GENERAL

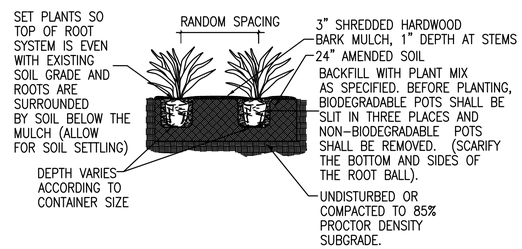

GROUNDCOVER/ORNAMENTAL GRASS PLANTING DETAIL (B3)

SCALE: NTS — GENERAL

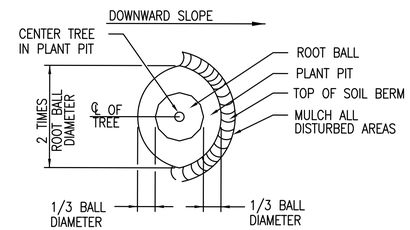

ELONGATED PLANT PIT FOR SLOPES - PLAN DETAIL (B4)

SCALE: NTS — GENERAL

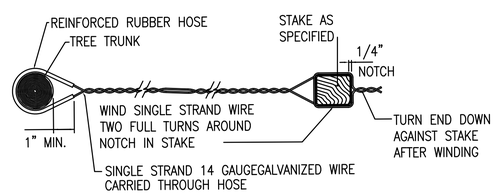

SINGLE STRAND GALVANIZED WIRE FASTENER (A1)

SCALE: NTS — GENERAL

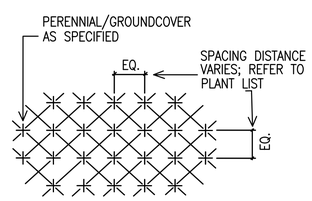

GROUNDCOVER/ORNAMENTAL GRASS SPACING (A3)

SCALE: NTS — GENERAL

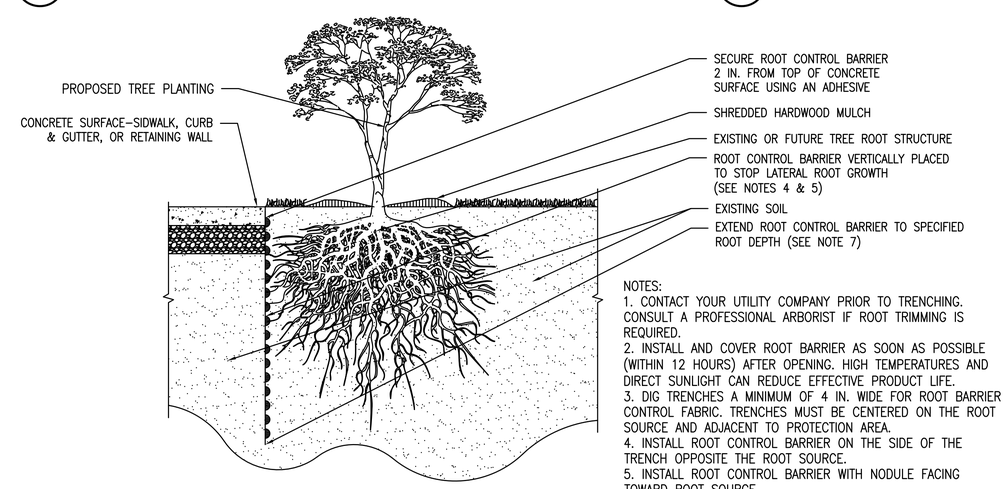

NOTES:
1. CONTACT YOUR UTILITY COMPANY PRIOR TO TRENCHING. CONSULT A PROFESSIONAL ARBORIST IF ROOT TRIMMING IS REQUIRED.
2. INSTALL AND COVER ROOT BARRIER AS SOON AS POSSIBLE (WITHIN 12 HOURS) AFTER OPENING. HIGH TEMPERATURES AND DIRECT SUNLIGHT CAN REDUCE EFFECTIVE PRODUCT LIFE.
3. DIG TRENCHES A MINIMUM OF 4 IN. WIDE FOR ROOT BARRIER CONTROL FABRIC. TRENCHES MUST BE CENTERED ON THE ROOT SOURCE AND ADJACENT TO PROTECTION AREA.
4. INSTALL ROOT CONTROL BARRIER ON THE SIDE OF THE TRENCH OPPOSITE THE ROOT SOURCE.
5. INSTALL ROOT CONTROL BARRIER WITH NODULE FACING TOWARD ROOT SOURCE
6. FIXING PINS SHOULD PENETRATE BARRIER BETWEEN THE NODULES ¼ IN. FROM TOP EDGE OF FABRIC AND AT A 45 DEGREE ANGLE TO THE TRENCH WALL.
7. ROOT CONTROL BARRIER SHALL BE 24 IN. DEPTH AT CURB & GUTTER, 39 IN. DEPTH AT RETAINING WALLS, AND 19.5 IN. DEPTH AT SIDEWALKS.

ROOT CONTROL BARRIER DETAIL (A4)

SCALE: NTS — GENERAL

MS	DESCRIPTION	DATE	APPR

NAVFAC

STATE OF MARYLAND — MARK LEE PATTERSON — No. 804 — REGISTERED LANDSCAPE ARCHITECT

AUGUST 22, 2014 SEAL

PARSONS BRINCKERHOFF
engineering architecture
277 Bendix Road
Suite 300
Virginia Beach, Virginia 23452
Phone: 757.466.1732
Fax: 757.466.1493
AE LOGO

APPROVED
FOR COMMANDER NAVFAC
ACTIVITY
SATISFACTORY TO DATE

DES PB	DRW PB	CHK PB	
PM	MMP		
BRANCH MANAGER	BDB		
CHIEF ENG/ARCH	RLJ/CRB		
FIRE PROTECTION	DAS		

DEPARTMENT OF THE NAVY
NAVAL FACILITIES ENGINEERING COMMAND
NAVAL FACILITIES ENGINEERING COMMAND ~ MID-ATLANTIC
HAMPTON ROADS IPT — NAVAL STATION - NORFOLK, VIRGINIA
NAVAL WEAPONS STATION — YORKTOWN, VIRGINIA
P-984 REGIMENTAL HEADQUARTERS
LANDSCAPE PLANTING DETAILS

SCALE:	AS NOTED
EPROJECT NO.	1113910
CONSTR. CONTR. NO.	N40085-08-D-9739
NAVFAC DRAWING NO.	12664829
SHEET	14 OF 573

L-502

DRAWFORM REVISION: 8 AUG 2007

8/25/2014 4:42 pm

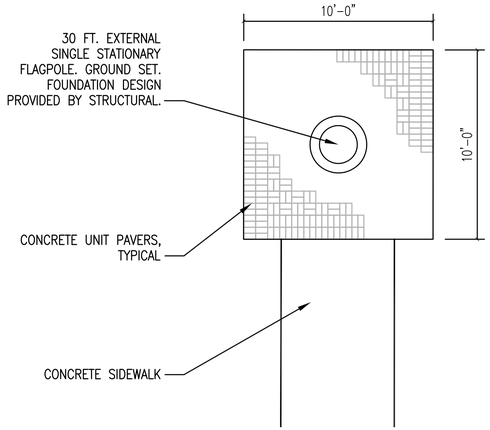

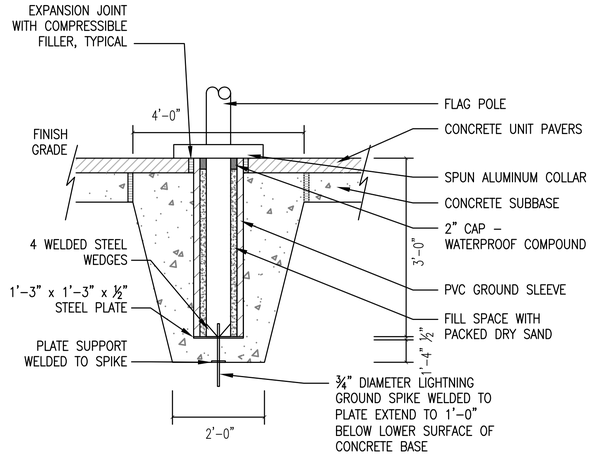

FLAG POLE PLAZA - PLAN DETAIL AND FOOTING

SCALE: 1/4" = 1'-0" L-102 C1

NOTE: STRUCTURAL DESIGN INFORMATION PROVIDED BY OTHERS.

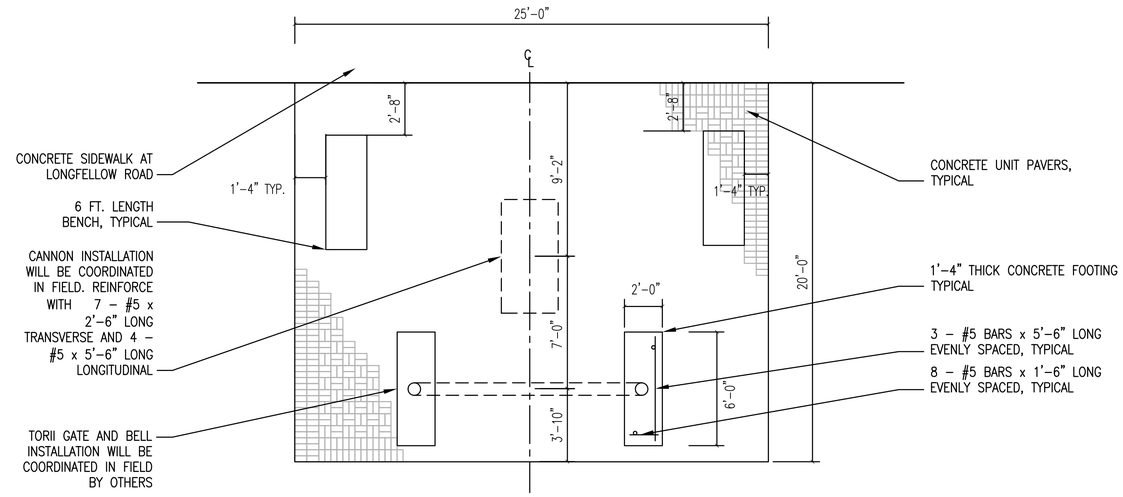

TORII GATE AND CANNON PLAZA - PLAN DETAIL

SCALE: NTS L-102 C4

NOTE: 1. STRUCTURAL DESIGN INFORMATION PROVIDED BY OTHERS.
2. FOOTING AND SUPPORTS FOR TORII GATE, CANNON, AND BENCHES ARE UNDERNEATH THE CONCRETE UNIT PAVERS.

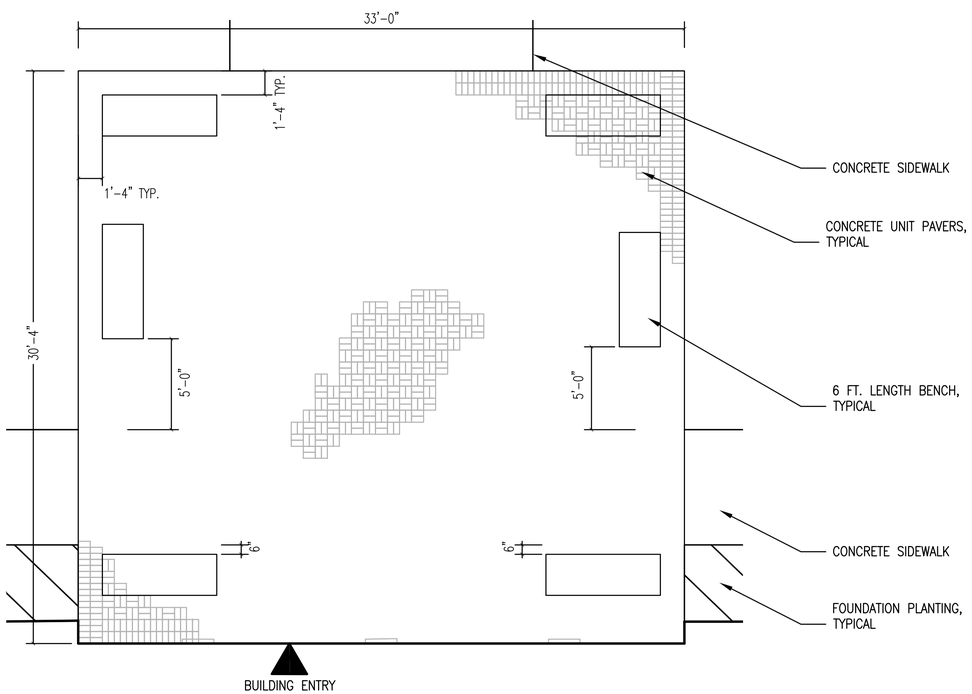

WEST ENTRY PLAZA - PLAN DETAIL

SCALE: NTS L-102 A1

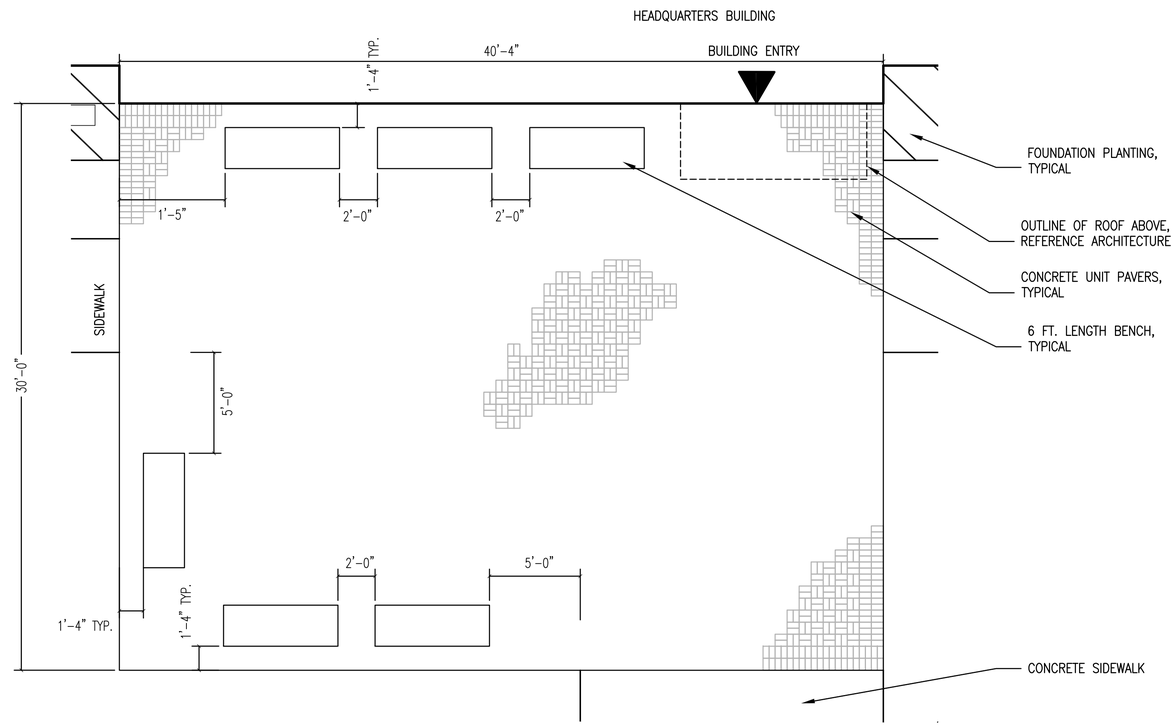

EAST ENTRY PLAZA - PLAN DETAIL

SCALE: NTS L-102 A4

GRAPHIC SCALE

SCALE: 1/4" = 1'-0" 0 2' 4' 8'

SYM	DESCRIPTION	DATE	APPR

NAVFAC

STATE OF MARYLAND – MARK LEE PATTERSON – No. 884 – REGISTERED LANDSCAPE ARCHITECT

AUGUST 22, 2014 SEAL

PARSONS BRINCKERHOFF
engineering
architecture
277 Bendix Road
Suite 300
Virginia Beach, Virginia
23452
Phone: 757.466.1732
Fax: 757.466.1493

AE LOGO

APPROVED

FOR COMMANDER NAVFAC

ACTIVITY

SATISFACTORY TO DATE

DES	PB	DRW	PB	CHK	PB
PM	MMP				
BRANCH MANAGER	BDB				
CHIEF ENG/ARCH	RLJ/CRB				
FIRE PROTECTION	DAS				

DEPARTMENT OF THE NAVY
NAVAL FACILITIES ENGINEERING COMMAND
HAMPTON ROADS IPT
NAVAL FACILITIES ENGINEERING COMMAND ~ MID-ATLANTIC
NAVAL STATION – NORFOLK, VIRGINIA
NAVAL WEAPONS STATION
YORKTOWN, VIRGINIA

P-984 REGIMENTAL HEADQUARTERS

LANDSCAPE DETAILS – HQ

SCALE: AS NOTED
EPROJECT NO. 1113910
CONSTR. CONTR. NO. N40085-08-D-9739
NAVFAC DRAWING NO. 12664830
SHEET 15 OF 573

L-503

DRAWFORM REVISION: 6 AUG 2007

8/25/2014 12:07 pm

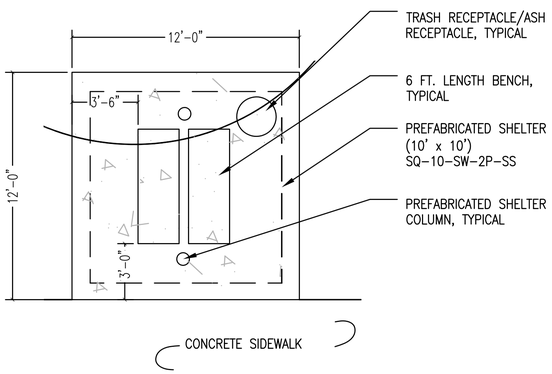

SMOKING SHELTER - PLAN DETAIL (C1)

SCALE: 1/4" = 1'-0" L-102

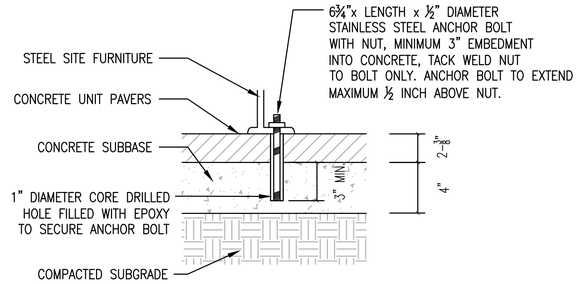

NOTES:
1. ANCHOR BOLTS SHALL NOT BE LOCATED AND INSTALLED UNTIL SITE FURNITURE IS IN PLACE. ANCHOR BOLT EMBEDMENT INTO CONCRETE SHALL BE MINIMUM 3".

2. PROVIDE A SHOP DRAWING FOR EACH SPECIFIED SITE FURNITURE ITEM INCLUDING ANCHORING DETAIL FOR REVIEW AND APPROVAL BY THE CONTRACTING OFFICER.

TYPICAL STEEL SITE FURNITURE DETAIL ON PAVER SURFACE (C3)

SCALE: NTS GENERAL

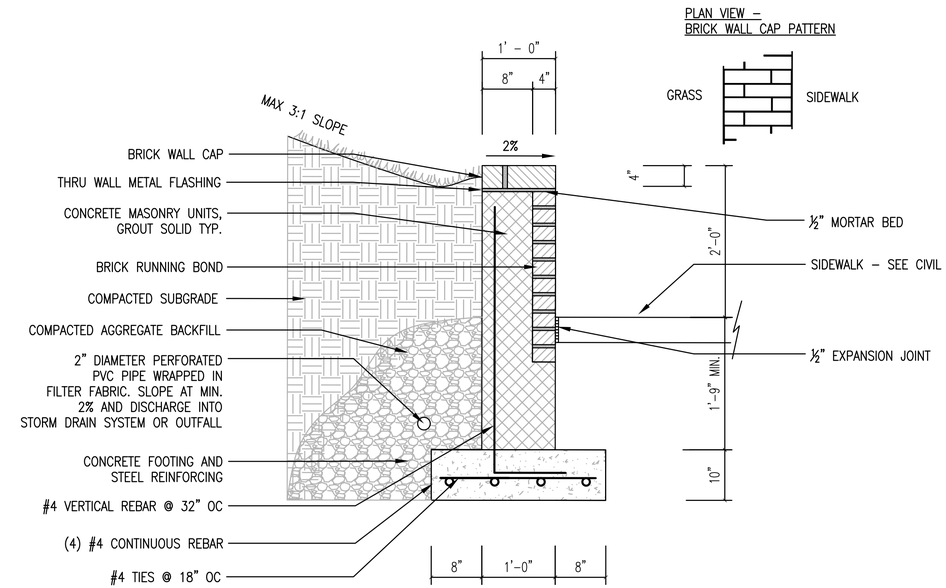

NOTE:
1. BRICK TO MATCH BUILDING BRICK DIMENSIONS AND COLOR. MORTAR JOINTS TO MATCH BUILDING MORTAR JOINTS.
2. BRICK SHALL FACE CMU AT ALL ABOVE GRADE AND EXPOSED LOCATIONS OF SEAT WALL.
3. STRUCTURAL DESIGN INFORMATION PROVIDED BY OTHERS.

SEATING WALL SECTION (C4)

SCALE: 1" = 1'-0" L-102

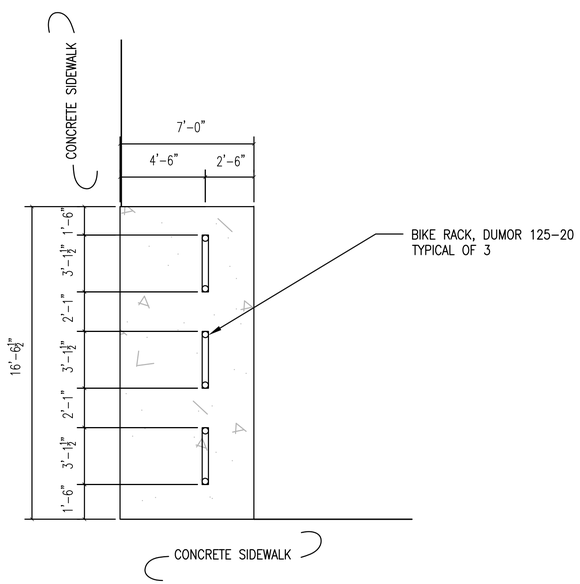

BICYCLE RACK - PLAN DETAIL (B1)

SCALE: NTS L-102

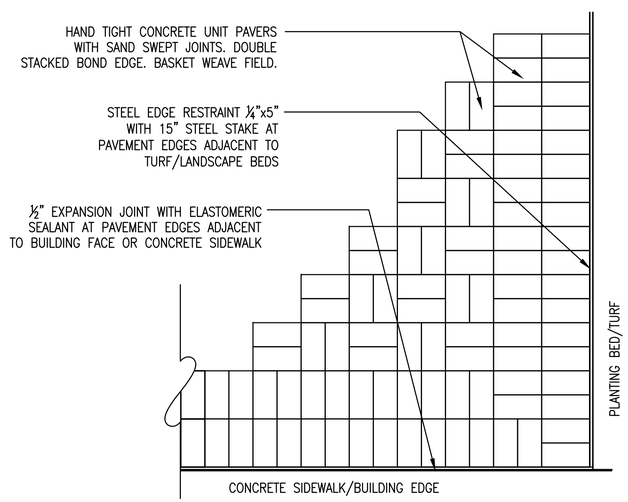

TYPICAL PAVING PATTERN - PLAN DETAIL (B3)

SCALE: 1" = 1'-0" GENERAL

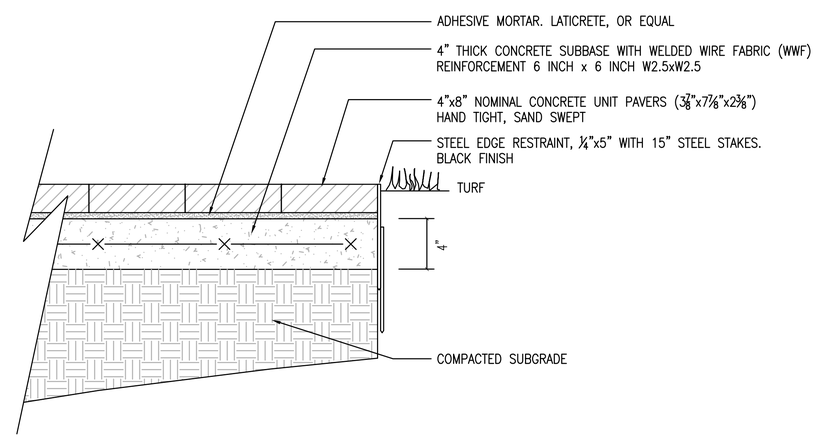

TYPICAL PAVING SECTION (B4)

SCALE: NTS GENERAL

GRAPHIC SCALE

SCALE: 1/4" = 1'-0" 0 2' 4' 8'

SCALE: 1" = 1'-0" 0 6" 1' 2'

SYM	DESCRIPTION	DATE	APPR

NAVFAC

STATE OF MARYLAND – JAMES LEE PATTERSON – No. 804 – REGISTERED LANDSCAPE ARCHITECT

AUGUST 22, 2014 SEAL

PARSONS BRINCKERHOFF
engineering
architecture
277 Bendix Road
Suite 300
Virginia Beach, Virginia
23452
Phone: 757.466.1732
Fax: 757.466.1493

AE LOGO

APPROVED

FOR COMMANDER NAVFAC

ACTIVITY

SATISFACTORY TO DATE

DES PB	DRW PB	CHK PB	
PM	MMP		
BRANCH MANAGER	BDB		
CHIEF ENG/ARCH	RLJ/CRB		
FIRE PROTECTION	DAS		

DEPARTMENT OF THE NAVY
NAVAL FACILITIES ENGINEERING COMMAND
HAMPTON ROADS IPT
NAVAL FACILITIES ENGINEERING COMMAND ~ MID-ATLANTIC
NAVAL STATION – NORFOLK, VIRGINIA
NAVAL WEAPONS STATION YORKTOWN, VIRGINIA
P-984 REGIMENTAL HEADQUARTERS
LANDSCAPE DETAILS – HQ

SCALE:	AS NOTED
EPROJECT NO.	1113910
CONSTR. CONTR. NO.	N40085-08-D-9739
NAVFAC DRAWING NO.	12664831
SHEET 16 OF 573	

L-504

DRAWFORM REVISION: 6 AUG 2007

8/25/2014 12:06 pm

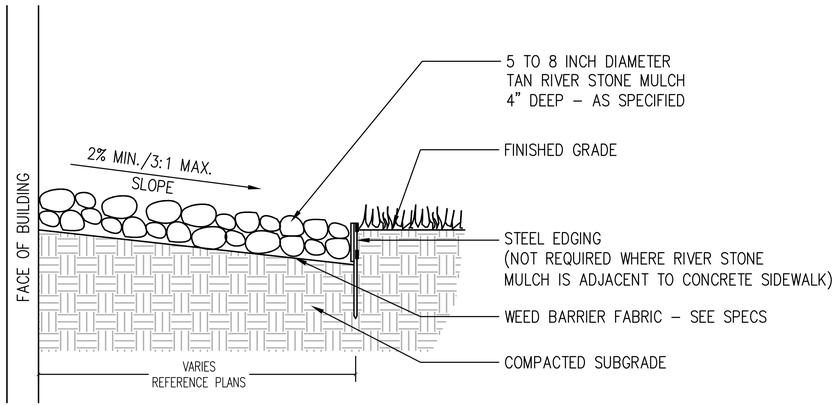

RIVER STONE MULCH - SECTION DETAIL

SCALE: NTS

L-102 D1

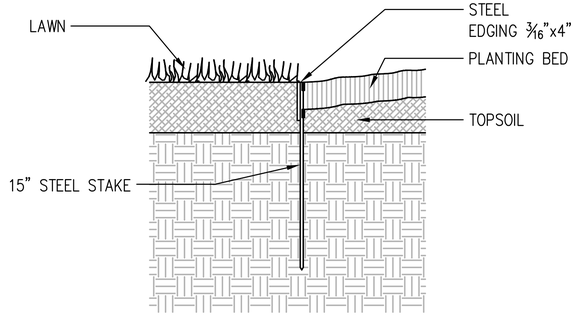

STEEL EDGING AT PLANTING BED - SECTION DETAIL

SCALE: NTS

L-102 B1

SYM	DESCRIPTION	DATE	APPR

NAVFAC

STATE OF MARYLAND — MARK LEE PATTERSON — No. 804 — REGISTERED LANDSCAPE ARCHITECT

AUGUST 22, 2014 SEAL

PARSONS BRINCKERHOFF
engineering
architecture
277 Bendix Road
Suite 300
Virginia Beach, Virginia
23452
Phone: 757.466.1732
Fax: 757.466.1493
AE LOGO

APPROVED

FOR COMMANDER NAVFAC

ACTIVITY

SATISFACTORY TO DATE

DES	PB	DRW	PB	CHK	PB
PM	MMP				
BRANCH MANAGER	BDB				
CHIEF ENG/ARCH	RLJ/CRB				
FIRE PROTECTION	DAS				

DEPARTMENT OF THE NAVY
NAVAL FACILITIES ENGINEERING COMMAND
HAMPTON ROADS IPT

NAVAL FACILITIES ENGINEERING COMMAND ~ MID-ATLANTIC
NAVAL STATION – NORFOLK, VIRGINIA

NAVAL WEAPONS STATION
YORKTOWN, VIRGINIA

P-984 REGIMENTAL HEADQUARTERS

LANDSCAPE DETAILS – HQ

SCALE:	AS NOTED
EPROJECT NO.	1113910
CONSTR. CONTR. NO.	N40085-08-D-9739
NAVFAC DRAWING NO.	12664832
SHEET	17 OF 573

L-505

DRAWFORM REVISION: 6 AUG 2007

8/25/2014 12:14 pm

DEMOLITION LEGEND

- DEMOLISH PAVEMENT
- DEMOLISH SITE FEATURES
- MILL AND OVERLAY PAVEMENT
- -XXXX- DEMOLISH UTILITY
- DEMOLISH FENCE, CURB, BOLLARDS, AND STRIPING
- DEMOLISH TREE
- DEMOLISH MISCELLANEOUS SITE

EROSION LEGEND

- SA — TEMPORARY SAFETY FENCE
- CE — TEMPORARY CONSTRUCTION ENTRANCE
- S — TEMPORARY SILT FENCE
- IP — TEMPORARY INLET PROTECTION
- CIP — TEMPORARY CULVERT INLET PROTECTION
- TD — TEMPORARY DIVERSION DIKE
- RWD — TEMPORARY RIGHT-OF-WAY DIVERSION
- ST# — TEMPORARY SEDIMENT TRAP
- OP# — PERMANENT OUTLET PROTECTION
- CD# — TEMPORARY ROCK CHECK DAMS
- TS — TEMPORARY TOPSOIL STOCKPILE
- LOC — LIMITS OF CONSTRUCTION
- DRAINAGE DIVIDE
- SS — TEMPORARY SUPER SILT FENCE
- TEMPORARY CULVERT
- B — TEMPORARY SEDIMENT TRAP BAFFLE

PAVING LEGEND

- ASPHALT PAVEMENT MILL AND OVERLAY
- ASPHALT PAVEMENT
- UNIT PAVERS
- CONCRETE
- PLANTING AREA (SEE PLANTING PLANS)
- PARADE GROUND
- TRAFFIC ARROW
- CROSSWALK
- TRAFFIC SIGN
- BOLLARD
- FLAG POLE

UTILITY LEGEND

EXISTING	PROPOSED	
C_X	C	COMMUNICATIONS UNDERGROUND
E_X	E	PRIMARY ELECTRIC UNDERGROUND
ES_X	ES	SECONDARY ELECTRIC UNDERGROUND
OHE_X	OHE	OVERHEAD ELECTRIC
G_X	G	GAS LINE
SS_X	SS	SANITARY LINE
W_X	W	WATER LINE
		STORM LINE
	SD	FOUNDATION DRAINAGE SYSTEM
	RW	COOLING TOWER RETURN WATER
	SW	COOLING TOWER SUPPLY WATER
		STORM GRATE INLET SEE DETAIL A2 ON SHEET CU511
	CI	STORM CURB INLET ON GRADE SEE DETAIL A2 ON SHEET CU513
	CI	STORM CURB INLET AT SAG SEE DETAIL A2 ON SHEET CU513
E/C		ELEC/COMM MANHOLE/HANDHOLE SEE SHEET CU531
		TRANSFORMER
		GENERATOR
		CLOSED CIRCUIT COOLER
		SWITCHGEAR
		LIGHT POLE
		ELECTRICAL POLE
		FIRE DEPARTMENT CONNECTION SEE DETAIL B5 ON SHEET CU501
		FIRE HYDRANT SEE DETAIL A5 ON SHEET CU501
		WATER VALVE SEE DETAIL D1 ON SHEET CU501
		POST INDICATOR VALVE SEE DETAIL C3 ON SHEET CU501
S	S	SANITARY MANHOLE SEE DETAIL A4 ON SHEET CU521
	CO	CLEANOUT SEE DETAIL B3 ON SHEET CU512
D	D	STORM MANHOLE SEE DETAIL A5, B5 ON SHEET CU511
		BMP SEE SHEET CU514 AND CU515
		END SECTION SEE DETAIL A2 ON SHEET CU512
	O	OUTLET STRUCTURE SEE DETAIL A2 ON SHEET CU514
	H	HYDRODYNAMIC SEPARATOR SEE DETAIL A5 ON SHEET CU514

ABBREVIATIONS

ABA	ARCHITECTURAL BARRIERS ACT
AC	AIR CONDITIONER UNIT
ADA	AMERICANS WITH DISABILITIES ACT
BOV	BLOW OFF VALVE
BLDG	BUILDING
BW	BOTTOM OF WALL
C/O	CLEAN OUT
CB	CATCH BASIN
CI	CURB INLET
CIP	CAST IRON PIPE
CL	CENTER LINE
COMM	COMMUNICATION
CONC	CONCRETE
DB	DUCTBANK
DI	DROP INLET
DIA /	DIAMETER
DIP	DUCTILE IRON PIPE
DS	DOWNSPOUT
ELEV	ELEVATION
EMH	ELECTRICAL MANHOLE
EP	EDGE OF PAVEMENT
E. S.	EXISTING STORM
EW	END WALL
EX	EXISTING
FF	FINISHED FLOOR
FH	FIRE HYDRANT
FL	FIRE LINE
HS	HYDRODYNAMIC SEPARATOR
HDPE	HIGH DENSITY POLYETHYLENE
INV	INVERT
LP	LOW POINT
MECH	MECHANICAL
MH	MANHOLE
MIN	MINIMUM
OC	ON CENTER
PC	POINT OF CURVATURE
PE	POLYETHYLENE
PSI	POUNDS PER SQUARE INCH
PVC	POLYVINYL CHLORIDE
RCP	REINFORCED CONCRETE PIPE
RIM	MANHOLE RIM
S	SLOPE
S/W	SIDEWALK
SF	SQUARE FEET
SS	SANITARY SEWER
SSMH	SANITARY SEWER MANHOLE
ST	STORM
STA	STATION
STM	STORM
TB	THRUST BLOCK
TC	TOP OF CURB
TR	THRUST RESTRAINT
TP	TOP OF PIPE
TW	TOP OF WALL
TYP	TYPICAL
WL	WATERLINE
W/	WITH
W/M	WATER MAIN
WV	WATER VALVE
X-ING	CROSSING

GRADING LEGEND

- 61.60 — SPOT GRADE
- 60 — MAJOR PROPOSED CONTOUR
- 61 — MINOR PROPOSED CONTOUR
- 60 — EXISTING CONTOUR
- TW61.00 / BW62.00 — TOP OF WALL SPOT GRADE / BOTTOM OF WALL SPOT GRADE
- 61.53(T) / 61.03(B) — TOP OF STEP / BOTTOM OF STEP
- 1.0% — GRADE SLOPE

NOTES:

1. SPOT SHOTS AT CURB REPRESENT ELEVATIONS AT EDGE OF PAVEMENT UNLESS OTHERWISE NOTED.
2. FINAL RETAINING WALL AND FOOTER DESIGN WILL BE INCORPORATED IN THE STRUCTURAL PORTION OF THE BUILDING DESIGN PACKAGE

SYM	DESCRIPTION	DATE	APPR

NAVFAC

COMMONWEALTH OF VIRGINIA
JON-MICHAEL C. LEMON
Lic. No. 041993
05/23/2014
PROFESSIONAL ENGINEER
SEAL

PARSONS BRINCKERHOFF
engineering
architecture
277 Bendix Road
Suite 300
Virginia Beach, Virginia
23452
Phone: 757.466.1732
Fax: 757.466.1493
AE LOGO

APPROVED
FOR COMMANDER NAVFAC
ACTIVITY
SATISFACTORY TO DATE

DES SM	DRW SM	CHK JL
PM MMP		
BRANCH MANAGER BDB		
CHIEF ENG/ARCH RLJ/CRB		
FIRE PROTECTION DAS		

DEPARTMENT OF THE NAVY
NAVAL FACILITIES ENGINEERING COMMAND
HAMPTON ROADS IPT
NAVAL FACILITIES ENGINEERING COMMAND ~ MID-ATLANTIC
NAVAL STATION ~ NORFOLK, VIRGINIA
NAVAL WEAPONS STATION YORKTOWN, VIRGINIA

P-985 BACHELOR ENLISTED QUARTERS

GENERAL NOTES & SYMBOLS & ABBREVIATIONS

SCALE: AS NOTED
EPROJECT NO. 1113911
CONSTR. CONTR. NO. N40085-08-D-9739
NAVFAC DRAWING NO. 12664304
SHEET OF
C-001

DRAWFORM REVISION: 6 AUG 2007

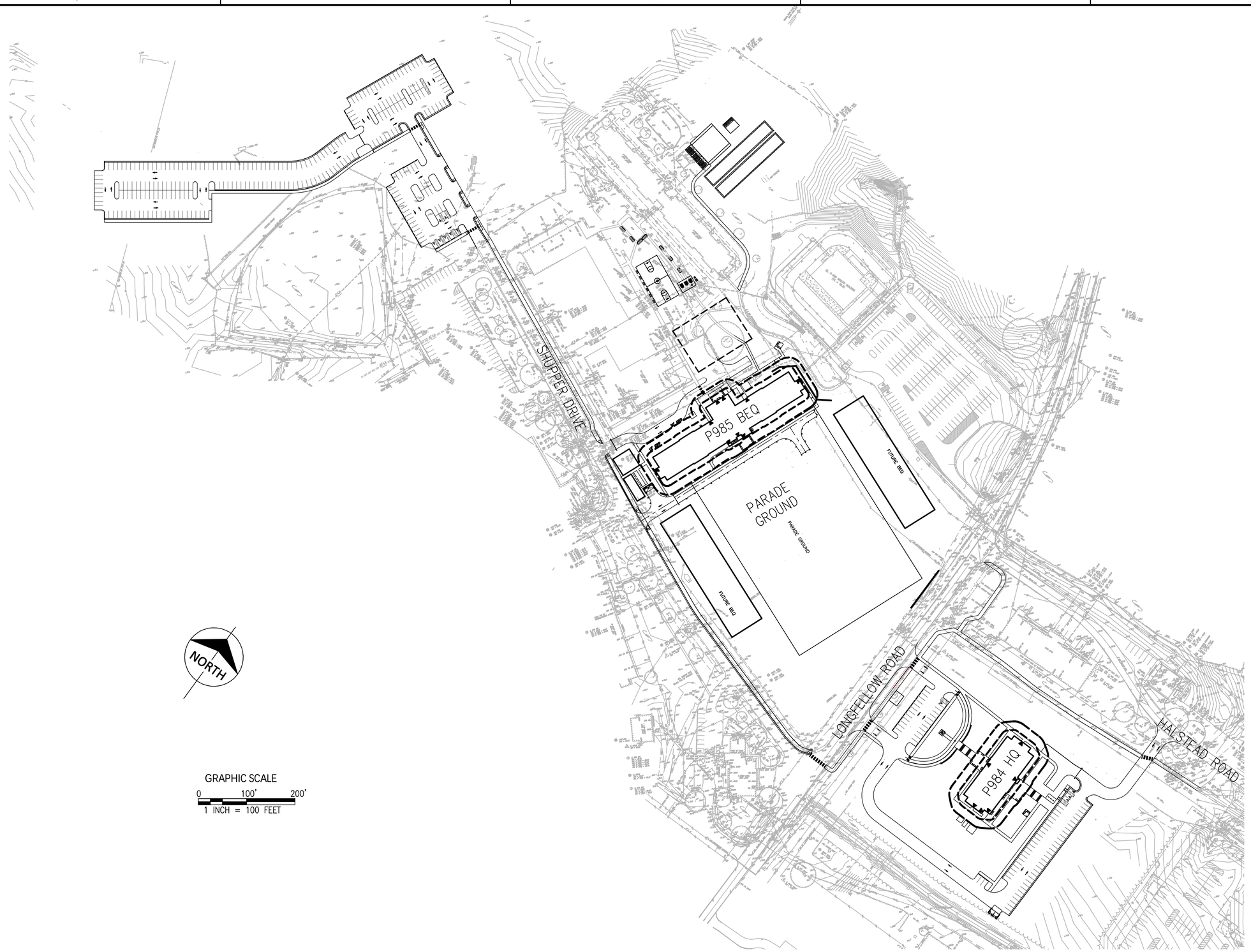

GRAPHIC SCALE

0 100' 200'

1 INCH = 100 FEET

OVERALL SITE PLAN

1" = 100'

A3

SYM	DESCRIPTION	DATE	APPR

NAVFAC

COMMONWEALTH OF VIRGINIA
JON-MICHAEL C. LEMON
Lic. No. 041993
05/23/2014
PROFESSIONAL ENGINEER
SEAL

PARSONS BRINCKERHOFF
engineering
architecture
277 Bendix Road
Suite 300
Virginia Beach, Virginia
23452
Phone: 757.466.1732
Fax: 757.466.1493
AE LOGO

APPROVED

FOR COMMANDER NAVFAC

ACTIVITY

SATISFACTORY TO DATE

DES	SM	DRW SM	CHK JL
PM			MMP
BRANCH MANAGER			BDB
CHIEF ENG/ARCH			RLJ/CRB
FIRE PROTECTION			DAS

DEPARTMENT OF THE NAVY
NAVAL FACILITIES ENGINEERING COMMAND
HAMPTON ROADS IPT

NAVAL FACILITIES ENGINEERING COMMAND ~ MID-ATLANTIC
NAVAL STATION ~ NORFOLK, VIRGINIA

NAVAL WEAPONS STATION
YORKTOWN, VIRGINIA

P-985 BACHELOR ENLISTED QUARTERS

OVERALL SITE PLAN

SCALE: AS NOTED

EPROJECT NO. 1113911

CONSTR. CONTR. NO. N40085-08-D-9739

NAVFAC DRAWING NO. 12664305

SHEET OF

C-002

DRAWFORM REVISION: 6 AUG 2007