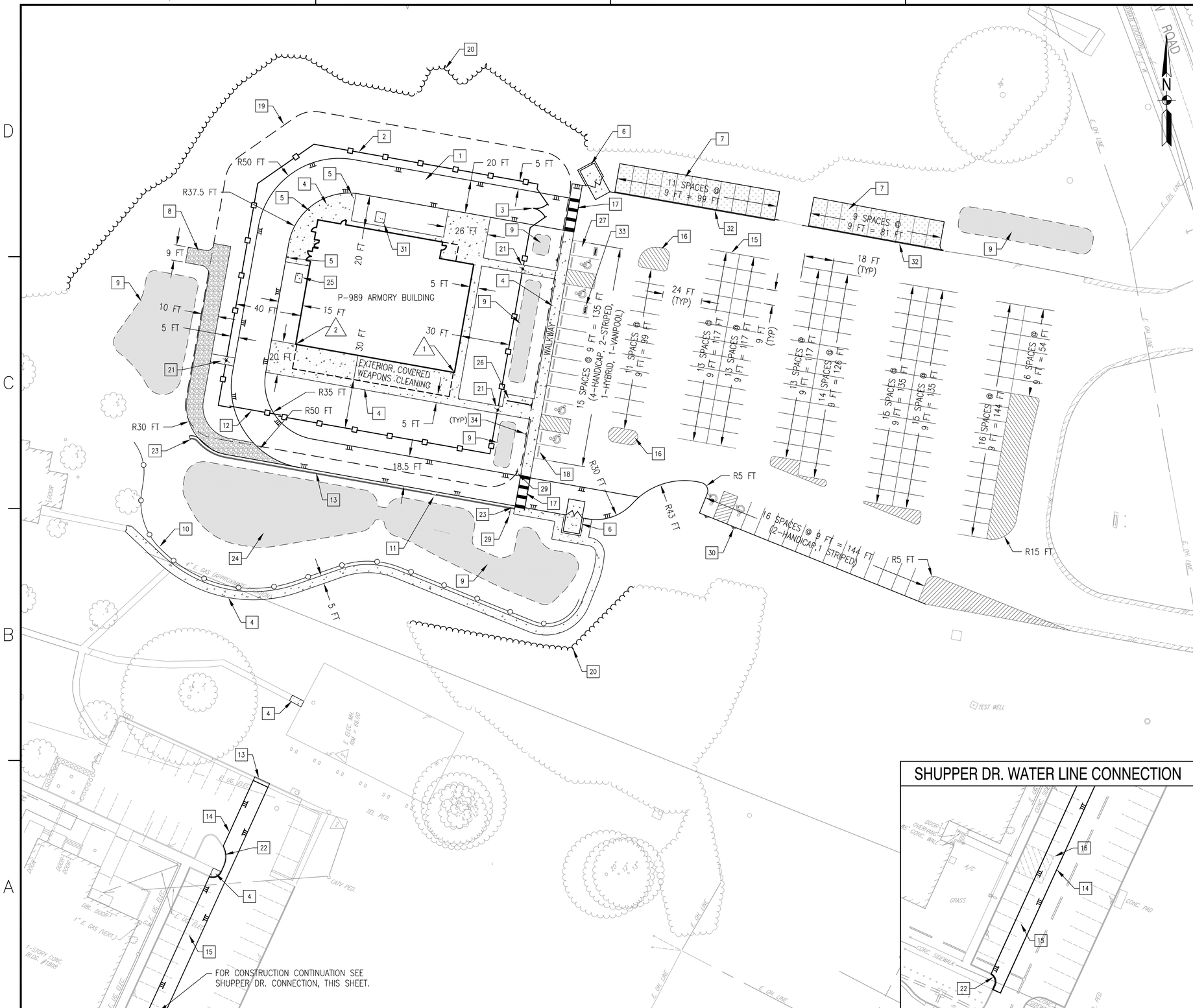

SHUPPER DR. WATER LINE CONNECTION

SHEET NOTES

1. VERIFY FIELD CONDITIONS, QUANTITIES AND DIMENSIONS PRIOR TO COMMENCEMENT OF WORK. ANY DISCREPANCIES SHALL BE PROMPTLY BROUGHT TO THE ATTENTION OF THE CONTRACTING OFFICER.
2. DIMENSIONS ARE TO FACE OF BUILDING AND EDGE OF PAVEMENT.
3. STRIPED ISLAND RADIUS DIMENSIONS ARE 2 FT UNLESS OTHERWISE SHOWN.
4. SEE LANDSCAPE ARCHITECT PLANS FOR WOOD FENCE DETAIL AND SPECIFICATIONS.
5. SEE ARCHITECTURE PLANS FOR BICYCLE RACK DETAILS AND SPECIFICATIONS.
6. SEE ARCHITECTURE AND STRUCTURAL PLANS FOR EXTERIOR COVERED WEAPONS CLEANING AREA AND DUMPSTER DETAILS.

PARKING SUMMARY

PARKING SPACES PROVIDED = 136 STANDARD RESTRIPED SPACES
6 HANDICAP SPACES
1 HYBRID SPACE
1 VANPOOL SPACE
20 POROUS PAVEMENT SPACES
TOTAL = 164 SPACES

SITE KEY NOTES

1	ONE-WAY DRIVE	18	PARKING BUMPER BLOCK
2	SECURITY FENCE	19	CLEAR ZONE
3	SWING GATE	20	CLEARING LIMITS
4	CONCRETE SIDEWALK	21	TURNSTILE
5	BOLLARD	22	CURB
6	DUMPSTER PAD W/ENCLOSURE	23	CURB TAPER
7	POROUS PAVEMENT	24	DRY DETENTION BASIN
8	PATROL ROAD	25	MECHANICAL EQUIPMENT PAD
9	BIORETENTION BASIN	26	BICYCLE RACK
10	WOOD FENCE	27	HYBRID PARKING SPACE
11	CURB CUT	28	NOT USED
12	SLIDING GATE	29	DO NOT ENTER SIGN
13	CURB AND GUTTER	30	HANDICAP SIGN
14	PAVEMENT PATCH	31	ELECTRICAL TRANSFORMER PAD
15	PARKING SPACE STRIPING	32	RIBBON CURB
16	PAINTED ISLAND	33	VANPOOL PARKING SPACE
17	CROSSWALK MARKING	34	HANDICAP SIGN

BUILDING CORNER COORDINATES

1 N: 3608468.2656 E: 12040551.0500

2 N: 3608485.5126 E: 12040454.1561

GRAPHIC SCALE

1" = 30' 0 15' 30' 60'

SYM	DESCRIPTION	DATE	APPR

NAVFAC

SEAL

A/E INFO

APPROVED

FOR COMMANDER NAVFAC

ACTIVITY

LT. TREVOR BINGHAM

SATISFACTORY TO DATE 4/19/13

DES RWP DRW RWP CHK BJL

DM CWR

BRANCH MANAGER

CHIEF ENG/ARCH

FIRE PROTECTION

DEPARTMENT OF THE NAVY
NAVAL FACILITIES ENGINEERING COMMAND
NAVAL FACILITIES ENGINEERING COMMAND MID-ATLANTIC
NAVAL STATION NORFOLK, NORFOLK, VIRGINIA
HAMPTON ROADS IPT
U.S. NAVAL WEAPONS STATION YORKTOWN
YORKTOWN, VIRGINIA

MCSFR CONSOLIDATION
P-989 ARMORY

SITE LAYOUT PLAN

SCALE: AS NOTED

EPROJECT NO.: 1113914

CONSTR. CONTR. NO.

NAVFAC DRAWING NO. 12646147

SHEET 16 OF 114

CS101

DRAWFORM REVISION: 10 MARCH 2009

FILE NAME: D:\Documents and Settings\robert.w.price\Desktop\P-989 ARMORY\P989_111391_CS_101.dwg LAYOUT NAME: CS-101 PLOTTED: Wednesday, May 01, 2013 - 2:52pm USER: robert.w.price

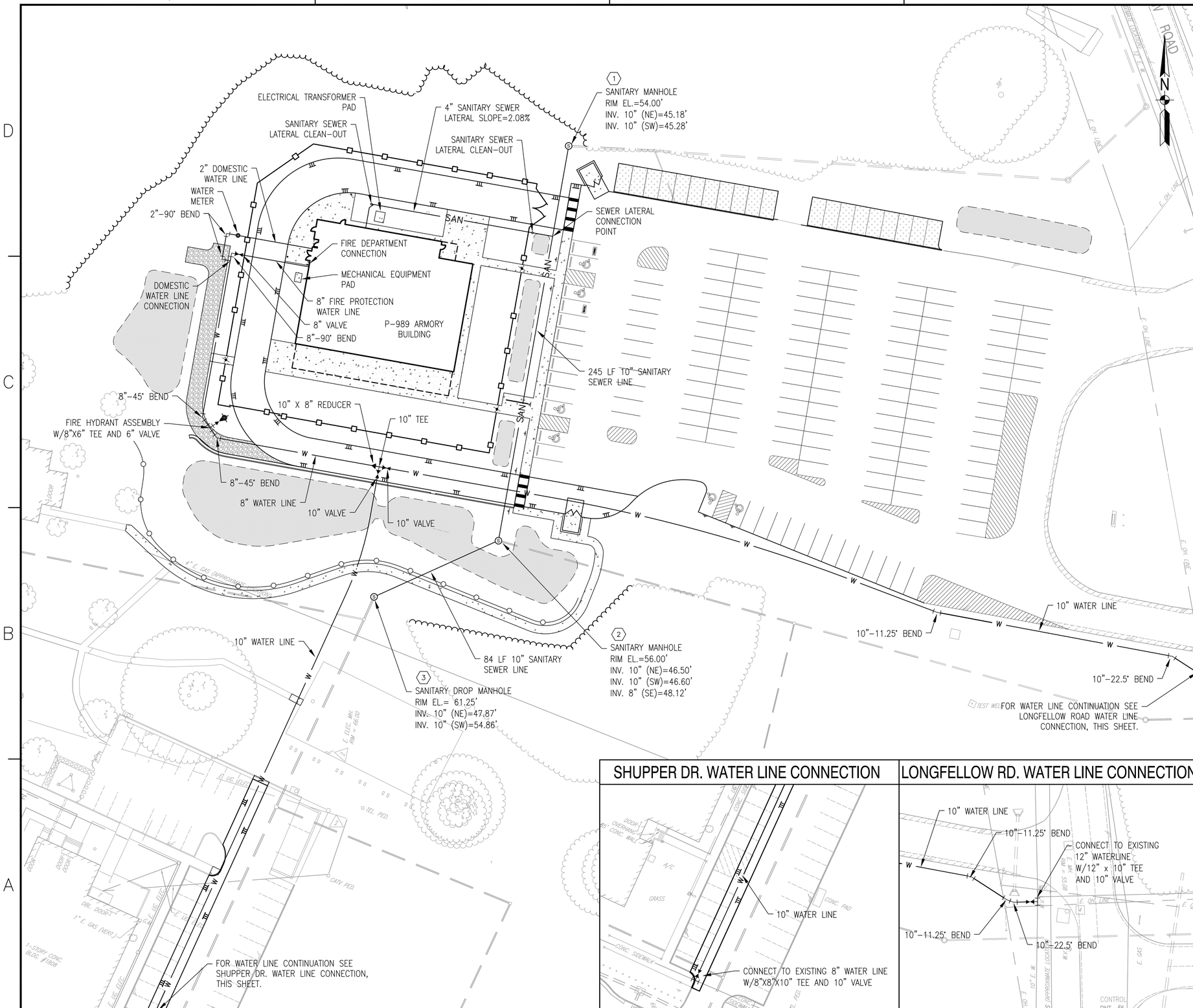

SHEET NOTES

1. SEE SHEET C-506 FOR PIPE BEDDING DETAIL.

2. VERIFY FIELD CONDITIONS, QUANTITIES AND DIMENSIONS PRIOR TO COMMENCEMENT OF WORK. ANY DISCREPANCIES SHALL BE PROMPTLY BROUGHT TO THE ATTENTION OF THE CONTRACTING OFFICER.

3. WATER LINE THRUST RESTRAINTS (NOT SHOWN FOR CLARITY) SHALL BE PROVIDED AS SPECIFIED. FOR TYPICAL CONCRETE THRUST BLOCK DETAIL FOR USE AT FIRE HYDRANTS, SEE SHEET C-505.

4. THE CONTRACTOR SHALL BE RESPONSIBLE FOR KEEPING THE EXISTING ONSITE SEWAGE COLLECTION SYSTEM OPERABLE THROUGHOUT THE CONSTRUCTION PERIOD. THE CONTRACTOR SHALL PROVIDE AND MAINTAIN ALL NECESSARY TEMPORARY EQUIPMENT NEEDED. THE NEW SANITARY SEWER SYSTEM SHALL NOT BE PLACED IN SERVICE UNTIL ALL APPLICABLE TESTING AND INSPECTIONS ARE COMPLETE.

GRAPHIC SCALE

1" = 30' 0 15' 30' 60'

NO.	DESCRIPTION	DATE	APPR.

NAVFAC

SEAL

A/E INFO

APPROVED

FOR COMMANDER NAVFAC

ACTIVITY

LT. TREVOR BINGHAM

SATISFACTORY TO DATE 4/19/13

DES RWP | DRW RWP | CHK BJL

DM CWR

BRANCH MANAGER

CHIEF ENG/ARCH

FIRE PROTECTION

DEPARTMENT OF THE NAVY
NAVAL FACILITIES ENGINEERING COMMAND
NAVAL FACILITIES ENGINEERING COMMAND MID-ATLANTIC
NAVAL STATION NORFOLK, NORFOLK, VIRGINIA
HAMPTON ROADS IPT
U.S. NAVAL WEAPONS STATION YORKTOWN
YORKTOWN, VIRGINIA

MCSFR CONSOLIDATION
P-989 ARMORY

UTILITY PLAN

SCALE: AS NOTED

EPROJECT NO.: 1113914

CONSTR. CONTR. NO.

NAVFAC DRAWING NO. 12646148

SHEET 17 OF 114

CU101

DRAWFORM REVISION: 10 MARCH 2009

FILE NAME: D:\Documents and Settings\robert.w.price\Desktop\P-989 ARMORY\P989_111391_CU_101.dwg LAYOUT NAME: CU-101 PLOTTED: Wednesday, May 01, 2013 - 2:53pm USER: robert.w.price

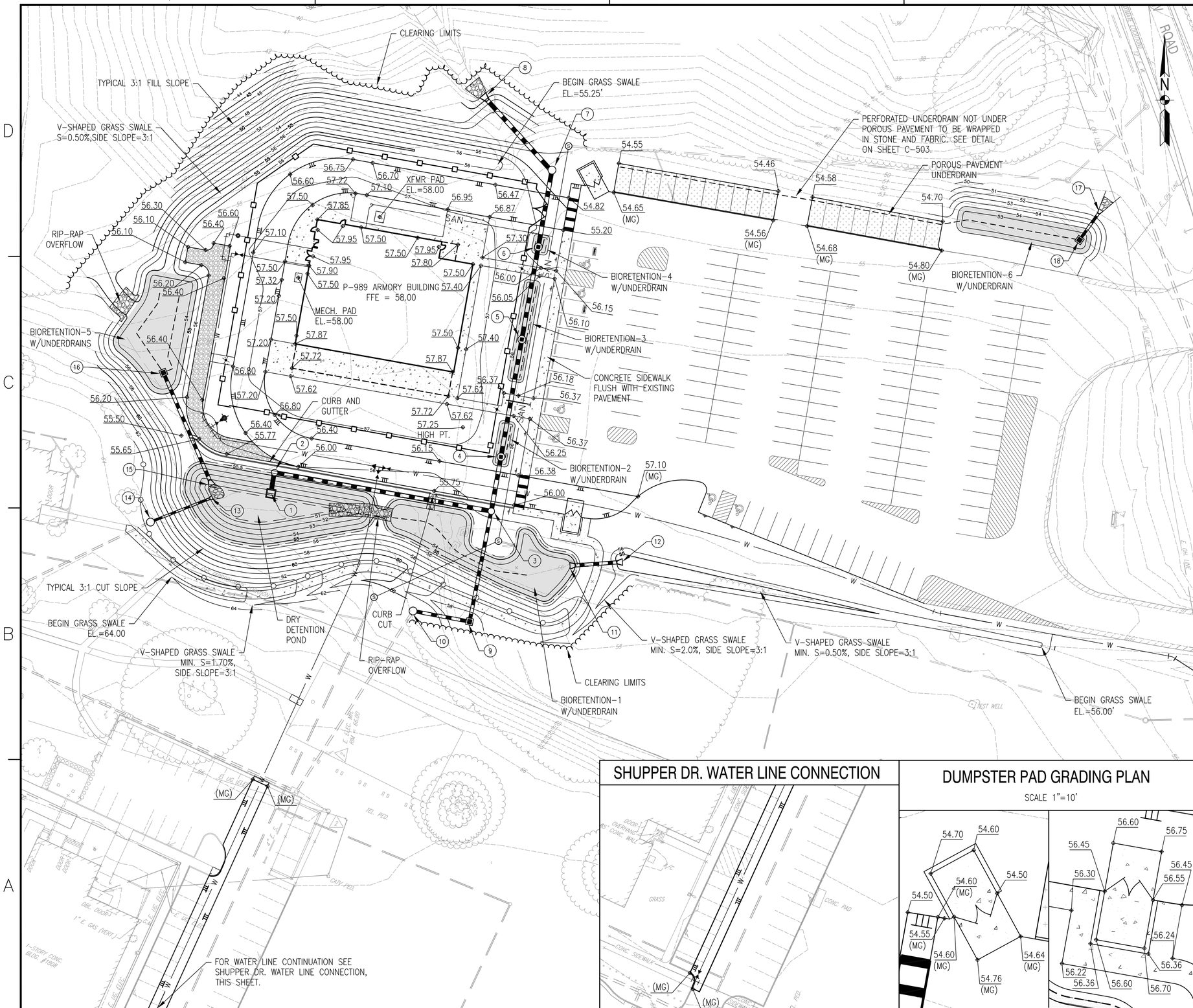

SHUPPER DR. WATER LINE CONNECTION

DUMPSTER PAD GRADING PLAN

SCALE 1"=10'

SHEET NOTES

1. PROVIDE VDOT R-3 RISER AND B-1 BASE FOR VDOT T-DI-1 TOP DRAINAGE STRUCTURES.
2. REFER TO VDOT ROAD AND BRIDGE STANDARDS AND SPECIFICATIONS FOR STORM DETAILS NOT SHOWN ON THESE DRAWINGS.
3. PROVIDE SHAPING OF MANHOLE AND INLET INVERTS IN ACCORDANCE WITH VDOT IS-1.

STORM SEWER KEY NOTES

1. VDOT SWM-1
   RIM EL.=54.40
   INV. IN=50.00'
2. VDOT MH-1
   RIM EL.=56.00'
   INV. IN=49.93'
   INV. OUT=49.88'
3. VDOT MH-1
   RIM EL.=56.25
   INV. IN (NW)=49.20'
   INV. IN (SW)=49.20'
   INV. OUT=49.15'
4. VDOT T-DI-1 TOP
   RIM EL.=55.75
   INV. IN=48.98'
   INV. OUT=48.93'
5. VDOT T-DI-1 TOP
   RIM EL.=55.75
   INV. IN=48.56'
   INV. OUT=48.51'
6. VDOT T-DI-1 TOP
   RIM EL.=54.75'
   INV. IN=48.22'
   INV. OUT=48.17'
7. VDOT MH-1
   RIM EL.=54.50'
   INV. IN=47.93'
   INV. OUT=47.88'
8. FLARED END-SECTION
   INV. EL.=47.57'
9. VDOT DI-1
   RIM EL.=57.00
   INV. IN=49.60'
   INV. OUT=49.55'
10. VDOT MH-1
    RIM. EL.=60.00'
    INV. IN =55.64'
    INV. OUT =54.00'
11. FLARED END-SECTION
    INV. EL.=54.00'
12. FLARED END-SECTION
    INV. EL.=54.20'
13. FLARED END-SECTION
    INV. EL.=50.50'
14. VDOT MH-1
    RIM. EL.=63.25'
    EX. INV. IN =59.68'
    INV. OUT =51.60'
15. FLARED END-SECTION
    INV. EL.=50.50'
16. VDOT DI-1
    RIM. EL.=54.20'
    INV. EL.=50.88'
17. FLARED END SECTION
    INV. EL.=49.89'
18. VDOT DI-1
    RIM. EL.=53.50'
    INV. EL. =50.00'

1-2 13 LF 30" RCP S=0.50%	13-14 37 LF 18" RCP S=2.75%
2-3 135 LF 30" RCP S=0.50%	15-16 69 LF 24" RCP S=0.50%
3-4 34 LF 30" RCP S=0.50%	17-18 18 LF 18" RCP S=0.50%
4-5 73 LF 30" RCP S=0.50%	
5-6 58 LF 30" RCP S=0.50%	
6-7 48 LF 30" RCP S=0.50%	
7-8 56 LF 30" RCP S=0.50%	
3-9 69 LF 19"X30" ECP S=0.50%	
9-10 35 LF 18" RCP S=12.6%	
11-12 20 LF 14"X23" ECP S=1.0%	

GRAPHIC SCALE

1" = 30' 0 15' 30' 60'

SYM	DESCRIPTION	DATE	APPR

NAVFAC

SEAL

A/E INFO

APPROVED

FOR COMMANDER NAVFAC

ACTIVITY

LT. TREVOR BINGHAM

SATISFACTORY TO DATE 4/19/13

DES RWP DRW RWP CHK BJL

DM CWR

BRANCH MANAGER

CHIEF ENG/ARCH

FIRE PROTECTION

DEPARTMENT OF THE NAVY
NAVAL FACILITIES ENGINEERING COMMAND
NAVAL FACILITIES ENGINEERING COMMAND MID-ATLANTIC
NAVAL STATION NORFOLK, NORFOLK, VIRGINIA
HAMPTON ROADS IPT
U.S. NAVAL WEAPONS STATION YORKTOWN
YORKTOWN, VIRGINIA

MCSFR CONSOLIDATION
P-989 ARMORY

GRADING AND DRAINAGE PLAN

SCALE: AS NOTED

EPROJECT NO.: 1113914

CONSTR. CONTR. NO.

NAVFAC DRAWING NO.
12646149

SHEET 18 OF 114

CG101

DRAWFORM REVISION: 10 MARCH 2009

FILE NAME: D:\Documents and Settings\robert.w.price\Desktop\P-989 ARMORY\P989_111391_CG_101.dwg LAYOUT NAME: CG-101 PLOTTED: Wednesday, May 01, 2013 - 2:56pm USER: robert.w.price

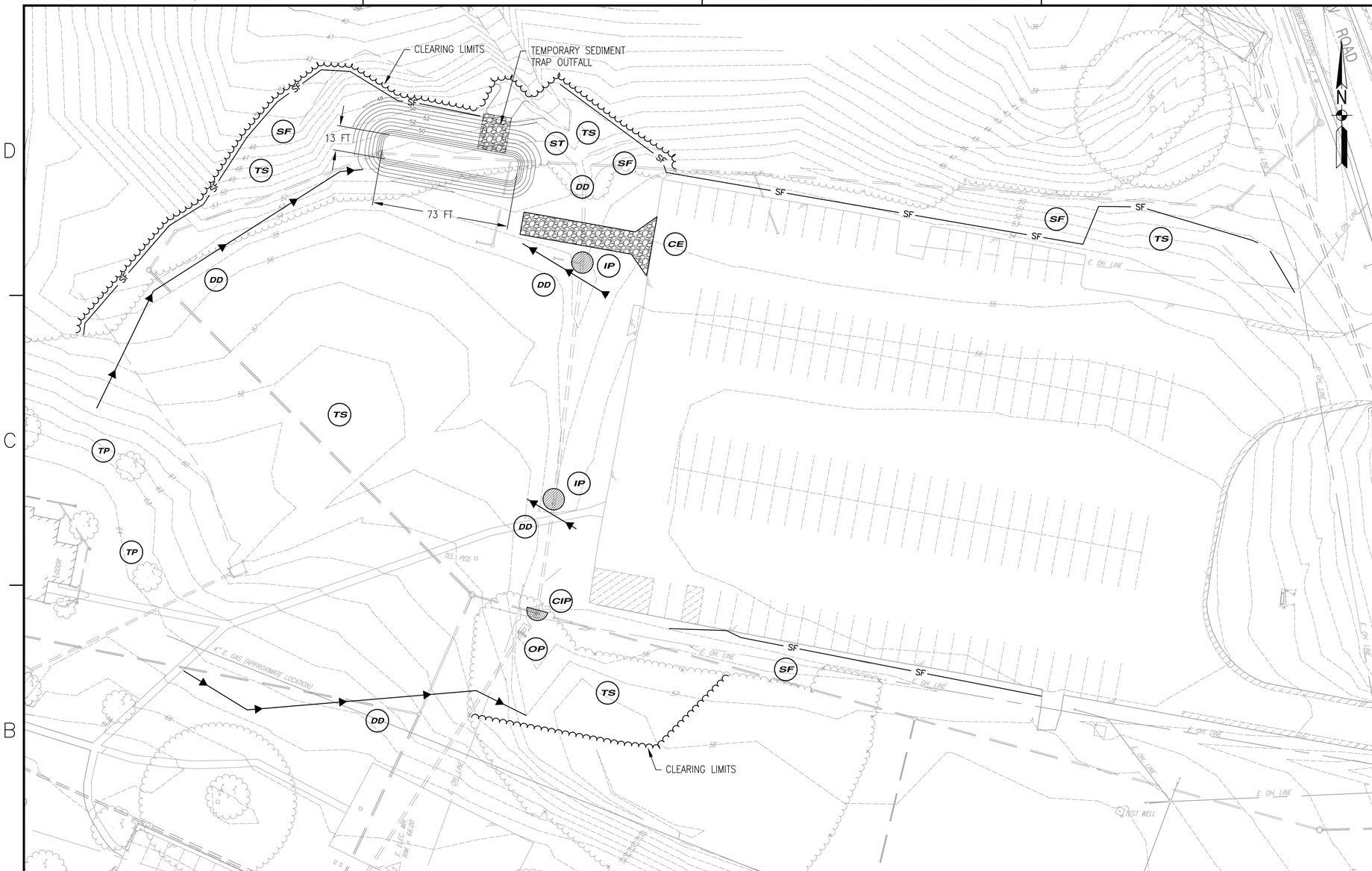

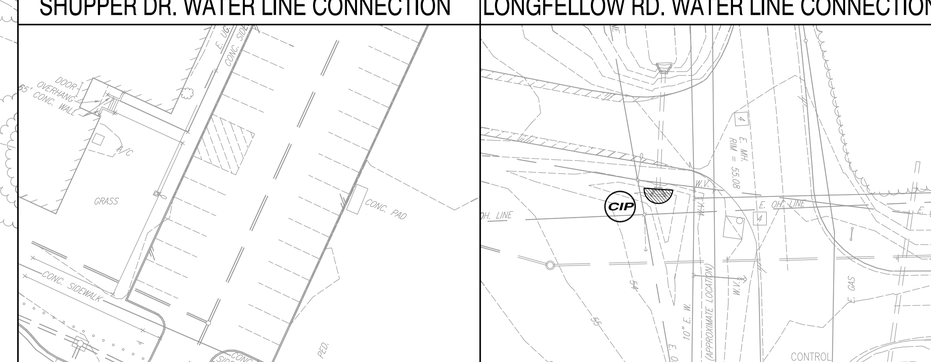

SHEET NOTES

1. SEDIMENT TRAP LENGTH AND WIDTH DIMENSIONS ARE TO BOTTOM OF TRAP. SEE DETAIL ON SHEET C-504 FOR SEDIMENT TRAP DETAILS.

EROSION AND SEDIMENT CONTROL LEGEND

ALL EROSION AND SEDIMENT CONTROL DEVICES SHALL BE IN ACCORDANCE WITH THE VIRGINIA EROSION AND SEDIMENT CONTROL HANDBOOK

- CE — CONSTRUCTION ENTRANCE
- ST — TEMPORARY SEDIMENT TRAP
- SF — SILT FENCE
- TP — TREE PROTECTION
- DD — DIVERSION DIKE
- CIP — CULVERT INLET PROTECTION
- IP — INLET PROTECTION
- OP — OUTLET PROTECTION
- TS — TEMPORARY SEEDING

GRAPHIC SCALE

1" = 30' 0 15' 30' 60'

SYM	DESCRIPTION	DATE	APPR

NAVFAC

SEAL

A/E INFO

APPROVED

FOR COMMANDER NAVFAC

ACTIVITY

LT. TREVOR BINGHAM

SATISFACTORY TO DATE 4/19/13

DES RWP DRW RWP CHK BJL

DM CWR

BRANCH MANAGER

CHIEF ENG/ARCH

FIRE PROTECTION

DEPARTMENT OF THE NAVY
NAVAL FACILITIES ENGINEERING COMMAND
NAVAL FACILITIES ENGINEERING COMMAND MID-ATLANTIC
NAVAL STATION NORFOLK, NORFOLK, VIRGINIA
HAMPTON ROADS IPT
U.S. NAVAL WEAPONS STATION YORKTOWN YORKTOWN, VIRGINIA
MCSFR CONSOLIDATION
P-989 ARMORY
EROSIOIN AND SEDIMENT CONTROL PLAN – PHASE 1

SCALE: AS NOTED

EPROJECT NO.: 1113914

CONSTR. CONTR. NO.

NAVFAC DRAWING NO. 12646150

SHEET 19 OF 114

CG102

DRAWFORM REVISION: 10 MARCH 2009

FILE NAME: D:\Documents and Settings\robert.w.price\Desktop\P-989 ARMORY\P989_111391_CG-102.dwg LAYOUT NAME: CG-102 PLOTTED: Wednesday, May 01, 2013 - 2:55pm USER: robert.w.price

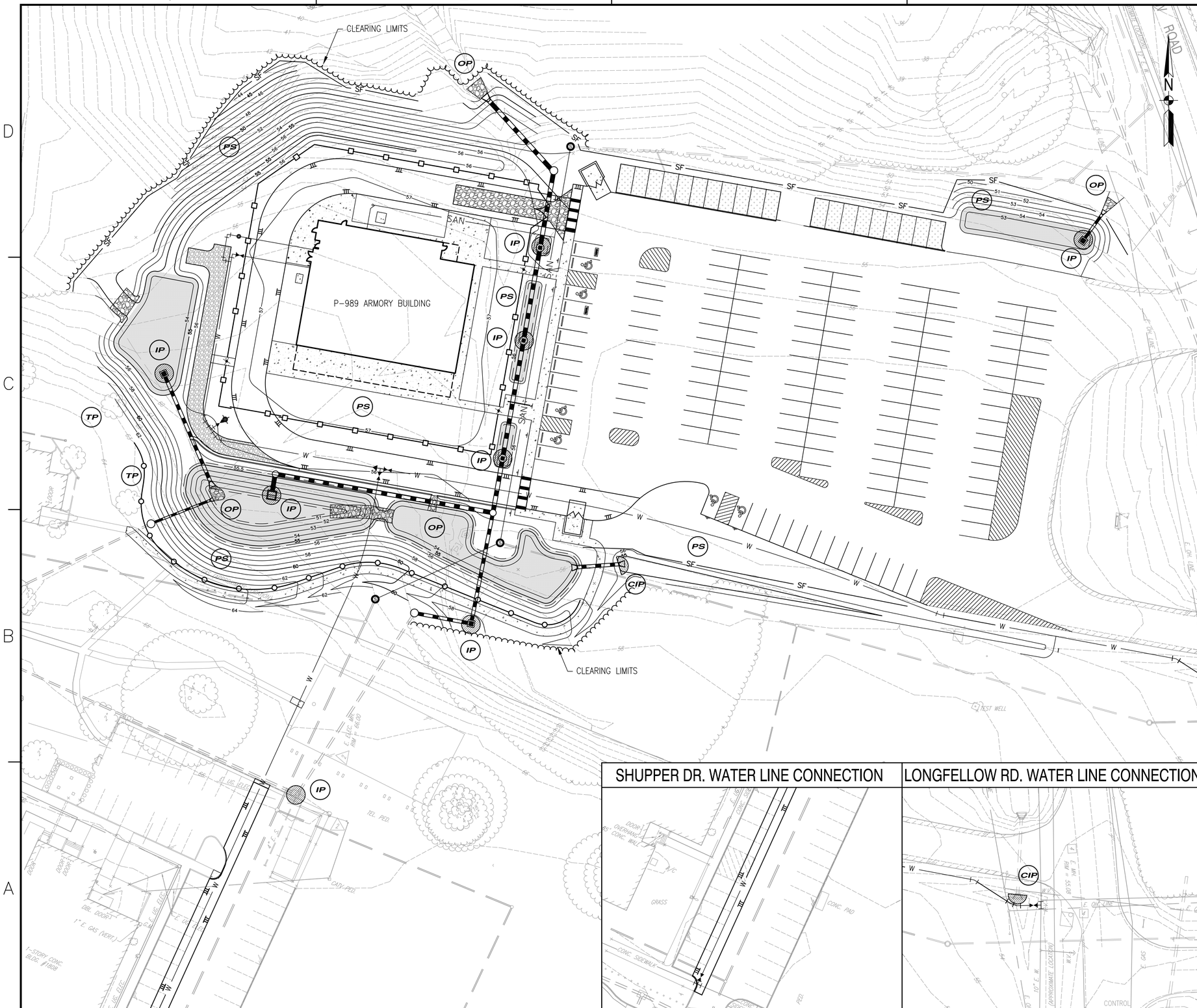

EROSION AND SEDIMENT CONTROL LEGEND

ALL EROSION AND SEDIMENT CONTROL DEVICES SHALL BE IN ACCORDANCE WITH THE VIRGINIA EROSION AND SEDIMENT CONTROL HANDBOOK

- SF — SILT FENCE
- TP — TREE PROTECTION
- CIP — CULVERT INLET PROTECTION
- IP — INLET PROTECTION
- OP — OUTLET PROTECTION
- PS — PERMANENT SEEDING

GRAPHIC SCALE

1" = 30' 0 15' 30' 60'

SYM	DESCRIPTION	DATE	APPR

NAVFAC

SEAL

A/E INFO

APPROVED

FOR COMMANDER NAVFAC

ACTIVITY

LT. TREVOR BINGHAM

SATISFACTORY TO DATE 4/19/13

DES RWP DRW RWP CHK BJL

DM CWR

BRANCH MANAGER

CHIEF ENG/ARCH

FIRE PROTECTION

DEPARTMENT OF THE NAVY
NAVAL FACILITIES ENGINEERING COMMAND
NAVAL FACILITIES ENGINEERING COMMAND MID-ATLANTIC
NAVAL STATION NORFOLK, NORFOLK, VIRGINIA
HAMPTON ROADS IPT
U.S. NAVAL WEAPONS STATION YORKTOWN YORKTOWN, VIRGINIA

MCSFR CONSOLIDATION
P-989 ARMORY

EROSION AND SEDIMENT CONTROL PLAN – PHASE 2

SCALE: AS NOTED

EPROJECT NO.: 1113914

CONSTR. CONTR. NO.

NAVFAC DRAWING NO. 12646151

SHEET 20 OF 114

CG103

DRAWFORM REVISION: 10 MARCH 2009

FILE NAME: D:\Documents and Settings\robert.w.price\Desktop\P-989 ARMORY\P989_111391_CG-103.dwg LAYOUT NAME: CG-103 PLOTTED: Wednesday, May 01, 2013 - 2:57pm USER: robert.w.price

STORM SEWER PROFILE

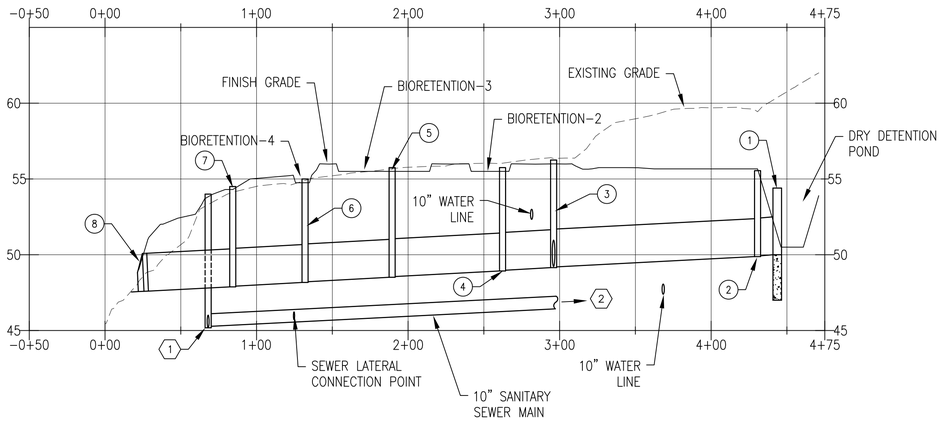

STORM SEWER PROFILE

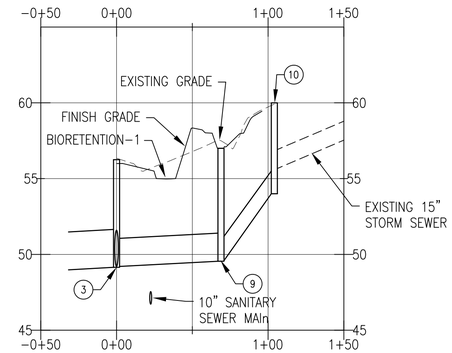

STORM SEWER PROFILE

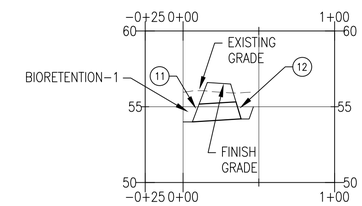

STORM SEWER PROFILE

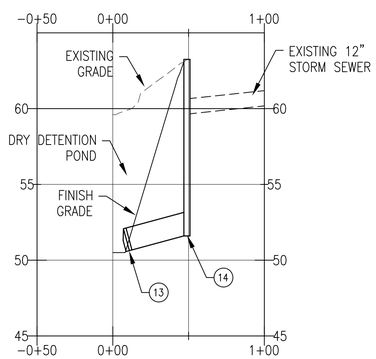

STORM SEWER PROFILE

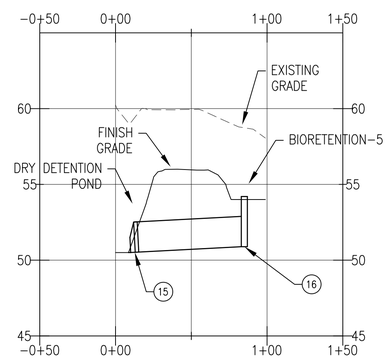

STORM SEWER PROFILE

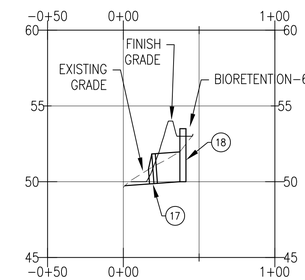

SANITARY SEWER PROFILE

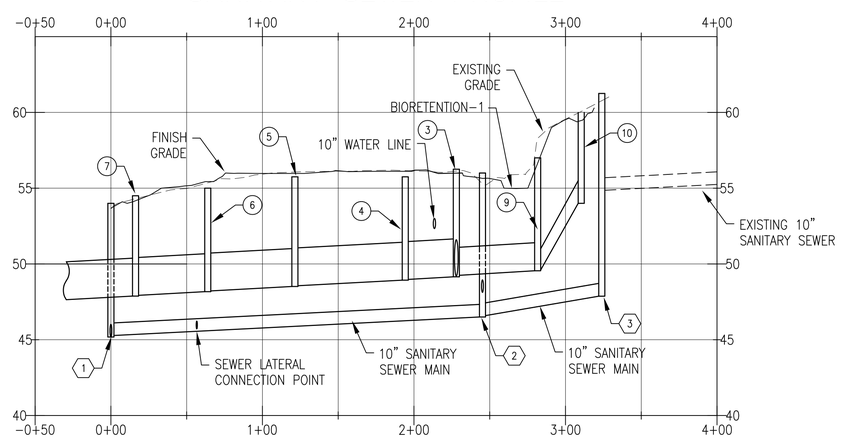

SHEET NOTES

1. SEE SHEET CG101 FOR STORM SEWER KEY NOTES.
2. SEE SHEET CU101 FOR SANITARY SEWER ELEVATIONS.

VERTICAL SCALE

1" = 5' 0 2.5' 5' 10'

HORIZONTAL SCALE

1" = 50' 0 25' 50' 100'

SYM	DESCRIPTION	DATE	APPR

NAVFAC

SEAL

A/E INFO

APPROVED

FOR COMMANDER NAVFAC

ACTIVITY

LT. TREVOR BINGHAM

SATISFACTORY TO DATE 4/19/13

DES RWP DRW RWP CHK BJL

DM CWR

BRANCH MANAGER

CHIEF ENG/ARCH

FIRE PROTECTION

DEPARTMENT OF THE NAVY
NAVAL FACILITIES ENGINEERING COMMAND
HAMPTON ROADS IPT
NAVAL FACILITIES ENGINEERING COMMAND MID-ATLANTIC
NAVAL STATION NORFOLK, NORFOLK, VIRGINIA
U.S. NAVAL WEAPONS STATION YORKTOWN
YORKTOWN, VIRGINIA

MCSFR CONSOLIDATION
P-989 ARMORY

STORM AND SANITARY SEWER PROFILES

SCALE: AS NOTED

EPROJECT NO.: 1113914

CONSTR. CONTR. NO.

NAVFAC DRAWING NO. 12646152

SHEET 21 OF 114

CP101

DRAWFORM REVISION: 10 MARCH 2009

FILE NAME: P:\Yorktown\MILCON\2013_1113914_P-989_MCSFR Armory\B_Design\Drawings\CIVIL\P989_111391_CP-101.dwg LAYOUT NAME: CP-101 PLOTTED: Wednesday, May 01, 2013 - 2:58pm USER: robert.w.price

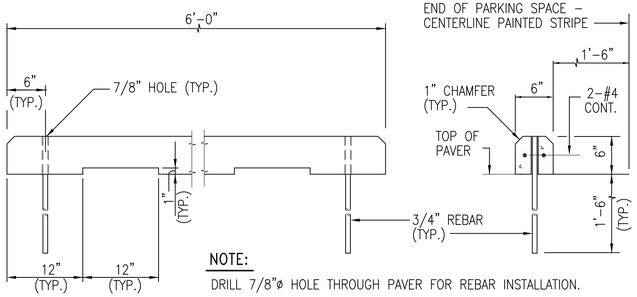

NOTE:
DRILL 7/8"ø HOLE THROUGH PAVER FOR REBAR INSTALLATION.

PARKING BUMPER
(PRECAST CONCRETE)
NOT TO SCALE

NOTE:
FOR PAVEMENT SLOPE AND DIMENSIONS SEE SITE LAYOUT AND GRADING PLAN.

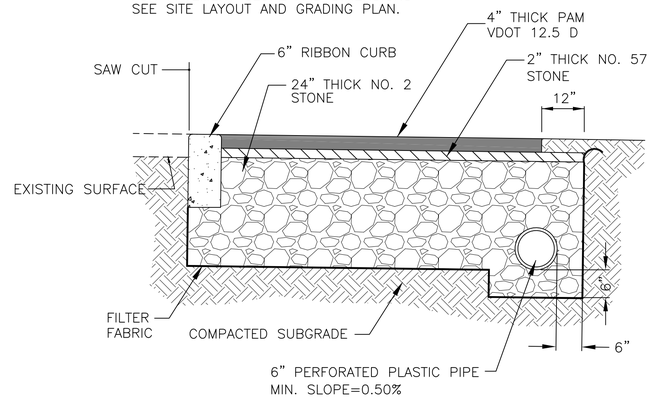

POROUS PAVEMENT SECTION
NOT TO SCALE

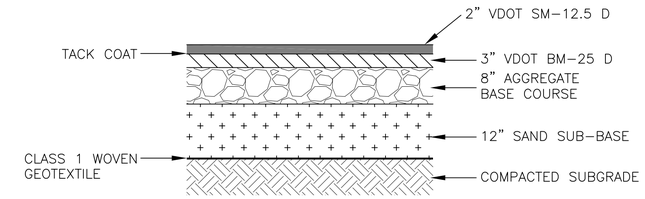

ONE-WAY DRIVE BITUMINOUS CONCRETE PAVEMENT (HEAVY DUTY)
NOT TO SCALE

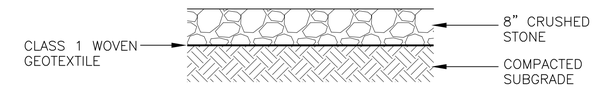

PATROL ROAD PAVEMENT SECTION
NOT TO SCALE

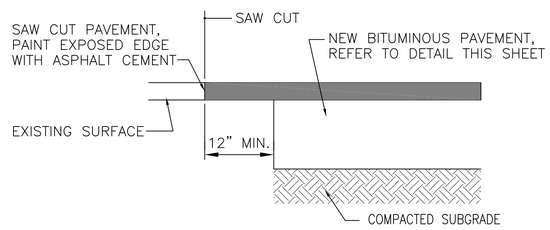

PAVEMENT INTERFACE DETAIL
NOT TO SCALE
(FOR USE WHERE NEW BITUMINOUS PAVEMENT ABUTTS EXISTING BITUMINOUS PAVEMENT)

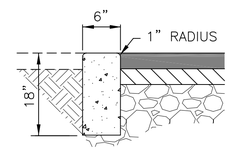

RIBBON CURB
NOT TO SCALE

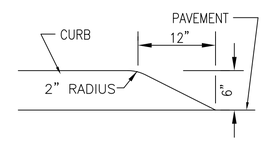

CURB WIPEDOWN
NOT TO SCALE

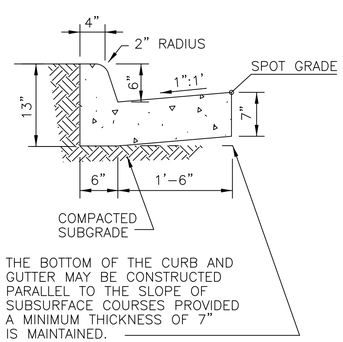

CURB AND GUTTER
NOT TO SCALE

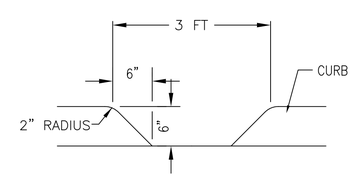

CURB CUT
NOT TO SCALE

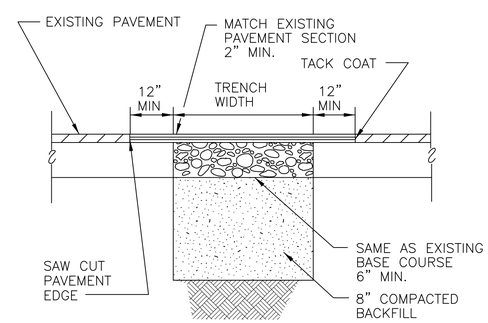

PAVEMENT PATCHING
NOT TO SCALE

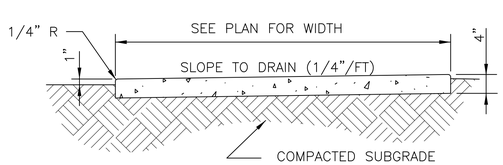

CONCRETE SIDEWALK
NOT TO SCALE

SYM	DESCRIPTION	DATE	APPR

NAVFAC

SEAL

A/E INFO

APPROVED
FOR COMMANDER NAVFAC
ACTIVITY
LT. TREVOR BINGHAM
SATISFACTORY TO DATE 4/19/13
DES RWP DRW RWP CHK BJL
DM CWR
BRANCH MANAGER
CHIEF ENG/ARCH
FIRE PROTECTION

DEPARTMENT OF THE NAVY
NAVAL FACILITIES ENGINEERING COMMAND
NAVAL FACILITIES ENGINEERING COMMAND MID-ATLANTIC
NAVAL STATION NORFOLK, NORFOLK, VIRGINIA
HAMPTON ROADS IPT
U.S. NAVAL WEAPONS STATION YORKTOWN YORKTOWN, VIRGINIA
MCSFR CONSOLIDATION
P-989 ARMORY
SITE GENERAL DETAILS

SCALE: AS NOTED
EPROJECT NO.: 1113914
CONSTR. CONTR. NO.
NAVFAC DRAWING NO.
12646153
SHEET 22 OF 114
C-501
DRAWFORM REVISION: 10 MARCH 2009

FILE NAME: D:\Documents and Settings\robert.w.price\Desktop\P-989 ARMORY\P989_111391_C-501-C-508.dwg LAYOUT NAME: C-501 PLOTTED: Wednesday, May 01, 2013 - 2:59pm USER: robert.w.price

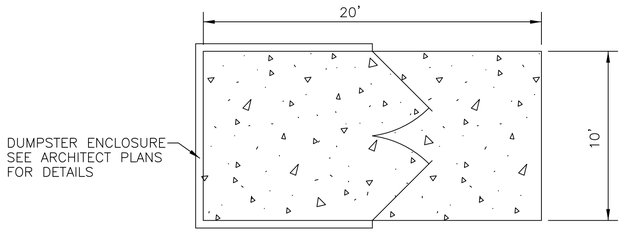

PLAN

NOTE:
SEE SHEET CG-101 FOR GRADES.

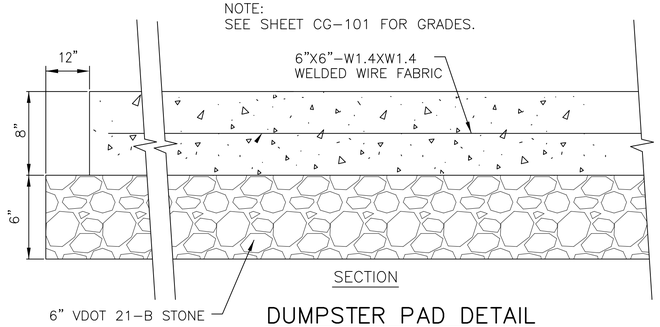

SECTION

DUMPSTER PAD DETAIL

NOT TO SCALE

HANDICAP SIGN

NOT TO SCALE

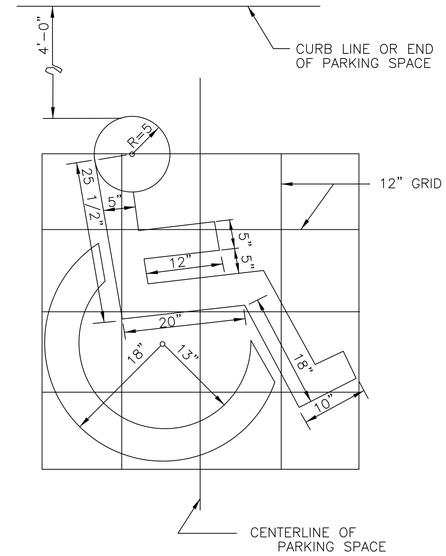

HANDICAP PARKING SYMBOL

NOT TO SCALE

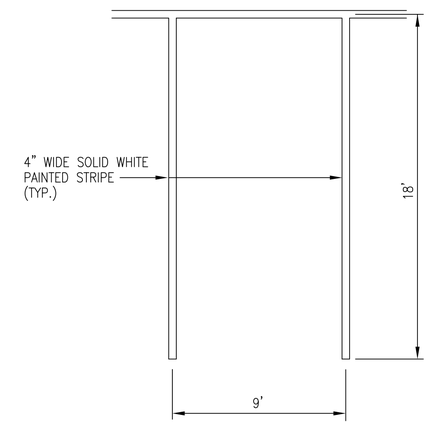

NEW PARKING SPACE LINES

NOT TO SCALE

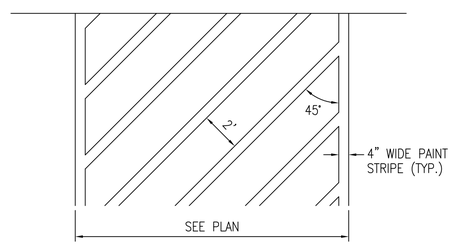

PAINTED ISLAND

NOT TO SCALE

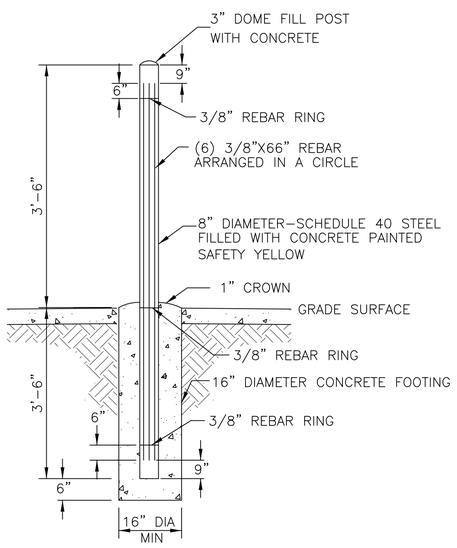

BOLLARD

NOT TO SCALE

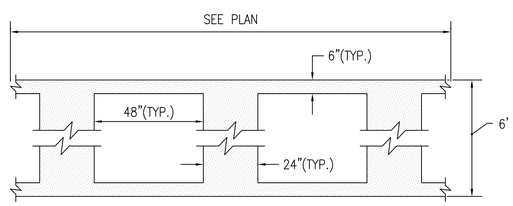

CROSSWALK MARKING DETAIL

N.T.S.

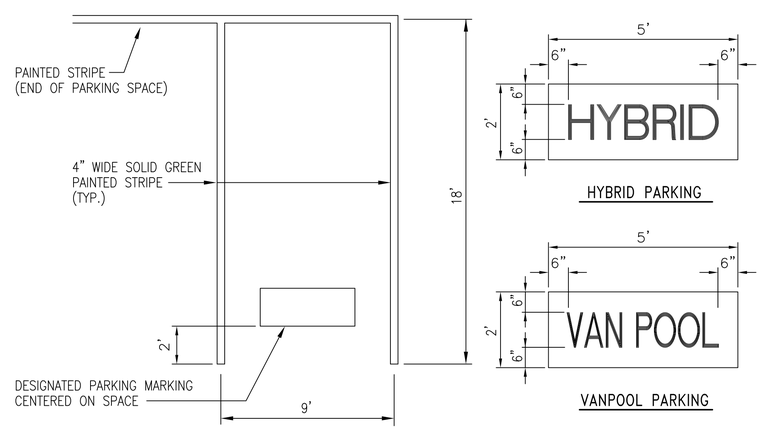

NOTES:

1. LETTERING SHALL BE SOLID GREEN ON SOLID WHITE BACKGROUND.
2. SEE SITE LAYOUT PLAN FOR DESIGNATED PARKING LOCATION.

DESIGNATED PARKING SPACE MARKING

NOT TO SCALE

SYM	DESCRIPTION	DATE	APPR

NAVFAC

SEAL

A/E INFO

APPROVED

FOR COMMANDER NAVFAC

ACTIVITY

LT. TREVOR BINGHAM

SATISFACTORY TO DATE 4/19/13

DES RWP DRW RWP CHK BJL

DM CWR

BRANCH MANAGER

CHIEF ENG/ARCH

FIRE PROTECTION

DEPARTMENT OF THE NAVY
NAVAL FACILITIES ENGINEERING COMMAND
NAVAL FACILITIES ENGINEERING COMMAND MID-ATLANTIC
NAVAL STATION NORFOLK, NORFOLK, VIRGINIA
HAMPTON ROADS IPT
U.S. NAVAL WEAPONS STATION YORKTOWN
YORKTOWN, VIRGINIA

MCSFR CONSOLIDATION
P-989 ARMORY

SITE GENERAL DETAILS

SCALE: AS NOTED

EPROJECT NO.: 1113914

CONSTR. CONTR. NO.

NAVFAC DRAWING NO.
12646154

SHEET 23 OF 114

C-502

DRAWFORM REVISION: 10 MARCH 2009

FILE NAME: D:\Documents and Settings\robert.w.price\Desktop\P-989 ARMORY\P989_111391_C-501-C-508.dwg LAYOUT NAME: C-502 PLOTTED: Wednesday, May 01, 2013 - 3:00pm USER: robert.w.price

BIORETENTION 1 THROUGH 6						
BIORETENTION	1	2	3	4	5	6
TOP ELEVATION	55.5'	56.0'	56.0'	55.0'	56.0'	54.0'
SURFACE ELEVATION	54.0'	55.5'	55.5'	54.5'	54.0'	53.0'
TOTAL MEDIA DEPTH	2.0'	2.0'	2.0'	2.0'	2.0'	2.0'
STONE DEPTH	0.5'	0.75'	0.5'	1.0'	0.5'	0.5'

FILTER MEDIA
86%–WASHED SHARP SAND
10%–SOIL FINES
4% ORGANIC MATTER
TILL THE TOP 3 INCHES WITH LEAF COMPOST

NOTES:
1. BIORENTENTION FILTER SHALL BE CONSTRUCTED PER THE VIRGINIA DCR STORMWATER DESIGN SPECIFICATION NO. 9.
2. UNDERDRAIN SHALL TIE TO BMP DRAINAGE SRUCTURE.
3. SEED THE BIORETENTION WITH TIFWAY 419 BERMUDA HYDROSEED.

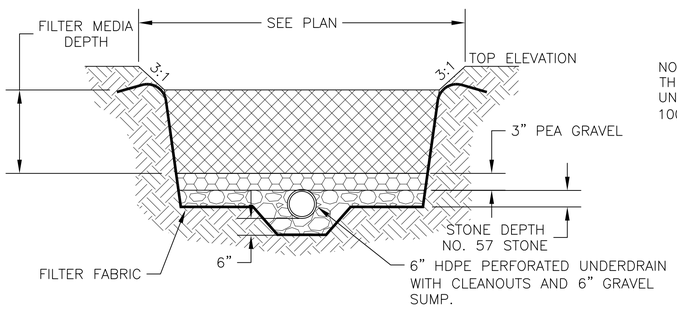

BIORETENTION 1 THROUGH 6
CROSS SECTION
NOT TO SCALE

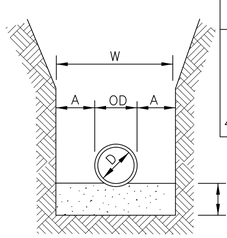

PIPE DIA "D"	MAXIMUM "A"
6" TO 15"	8"
18" TO 21"	10"
24" TO 30"	12"
33" TO 42"	15"
48" & LARGER	18"

MAXIMUM TRENCH WIDTH "W" TAKEN AT TOP OF PIPE

NOTE: PROVIDE BEDDING IN ACCORDANCE WITH THE SPECIFICATIONS.

TRENCH FOR NON–PLASTIC PIPE
NOT TO SCALE

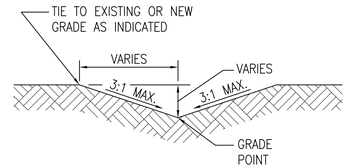

SWALE DETAIL
NOT TO SCALE

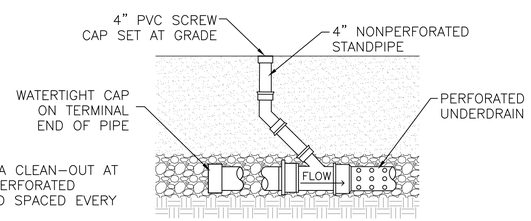

NOTE: PROVIDE A CLEAN–OUT AT THE HEAD OF PERFORATED UNDERDRAIN AND SPACED EVERY 100'.

USE 45° WYE AND FITTING OR EQUIVALENT TO CONNECT UNDERDRAIN TO STANDPIPE

UNDERDRAIN CLEANOUT DETAIL
NOT TO SCALE

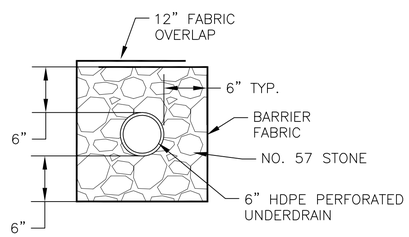

PERFORATED UNDERDRAIN
NOT UNDER PAVEMENT DETAIL
NOT TO SCALE

NOTE: PROVIDE TRASH RACK AND DEBRIS RACK (NOT SHOWN) PER VDOT SWM–1 AND SWM–DR.

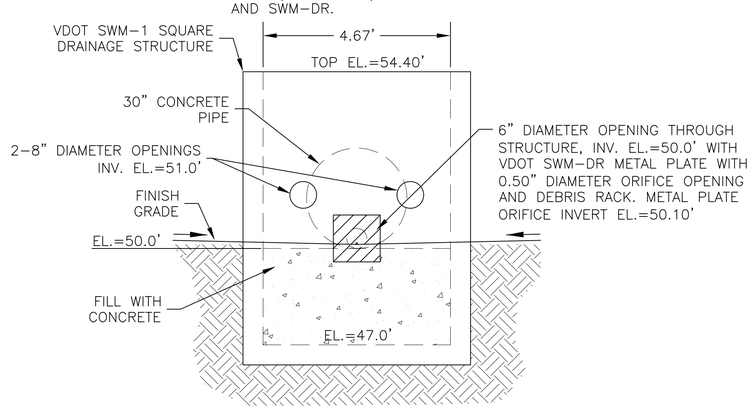

DRY POND
DRAINAGE STRUCTURE 1
NOT TO SCALE

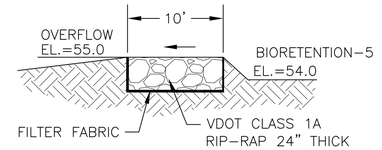

PROFILE

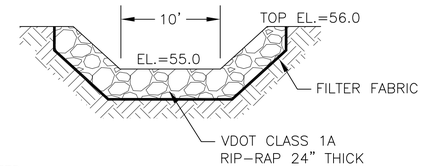

CROSS SECTION

BIORETENTION–5
RIP–RAP OVERFLOW
NOT TO SCALE

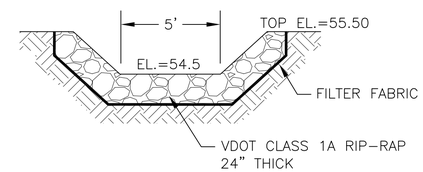

CROSS SECTION

BIORETENTION–1
RIP–RAP OVERFLOW
NOT TO SCALE

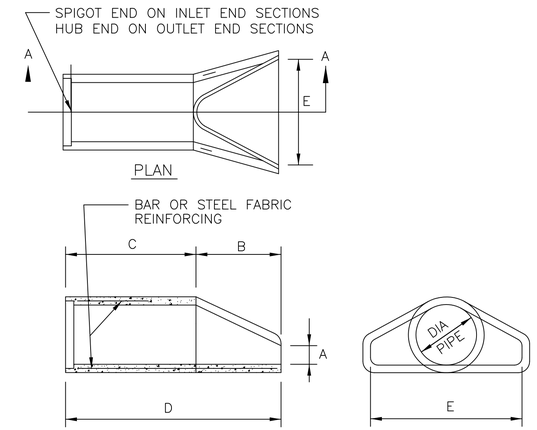

END SECTION DIMENSIONS					
DIA	A	B	C	D	E
12"	4"	2'–0"	2'–0"	4'–0"	2'–0"
15"	6"	2'–3"	1'–9"	4'–0"	2'–6"
18"	9"	2'–3"	1'–9"	4'–0"	3'–0"
24"	9 1/2"	3'–7"	2'–6"	6'–1"	4'–0"
30"	1'–0"	4'–6"	1'–7 3/4"	6'–1 3/4"	5'–0"

FLARED END SECTION 12" – 30"
CONCRETE PIPE
NOT TO SCALE

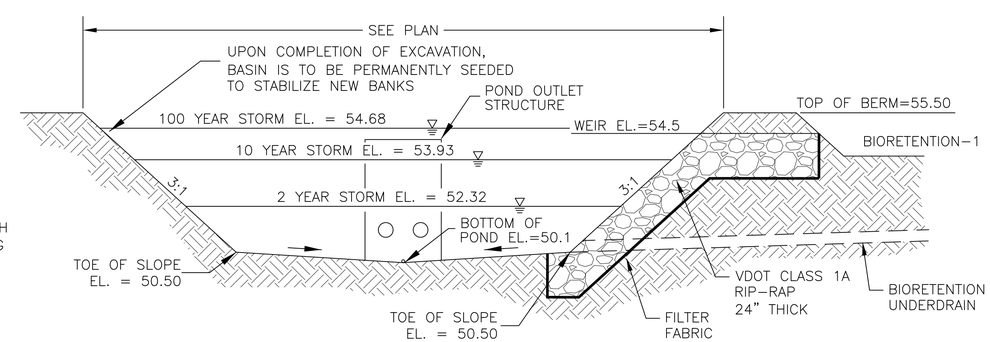

DRY DETENTION POND CROSS SECTION
NOT TO SCALE

MSS	DESCRIPTION	DATE	APPR.

NAVFAC

SEAL

A/E INFO

APPROVED
FOR COMMANDER NAVFAC
ACTIVITY
LT. TREVOR BINGHAM
SATISFACTORY TO DATE 4/19/13
DES RWP DRW RWP CHK BJL
DM CWR
BRANCH MANAGER
CHIEF ENG/ARCH
FIRE PROTECTION

DEPARTMENT OF THE NAVY
NAVAL FACILITIES ENGINEERING COMMAND
HAMPTON ROADS IPT
U.S. NAVAL WEAPONS STATION YORKTOWN
NAVAL FACILITIES ENGINEERING COMMAND MID-ATLANTIC
NAVAL STATION NORFOLK, NORFOLK, VIRGINIA
YORKTOWN, VIRGINIA
MCSFR CONSOLIDATION
P-989 ARMORY
DRAINAGE DETAILS

SCALE: AS NOTED
EPROJECT NO.: 1113914
CONSTR. CONTR. NO.
NAVFAC DRAWING NO.
12646155
SHEET 24 OF 114
C-503

DRAWFORM REVISION: 10 MARCH 2009

FILE NAME: D:\Documents and Settings\robert.w.price\Desktop\P-989 ARMORY\P989_111391_C-501-C-508.dwg LAYOUT NAME: C-503 PLOTTED: Wednesday, May 01, 2013 - 3:01pm USER: robert.w.price

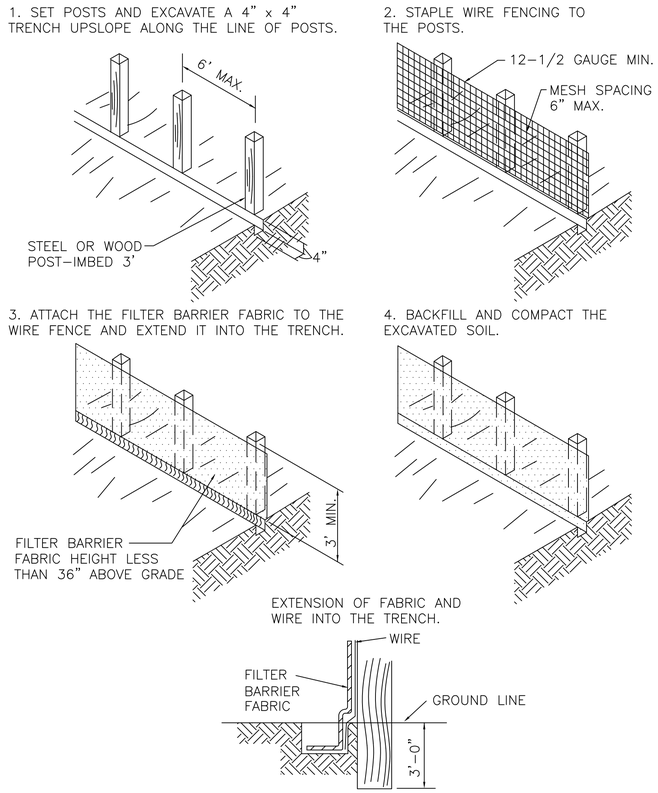

TEMPORARY SEDIMENT FENCE (SF)

NOT TO SCALE

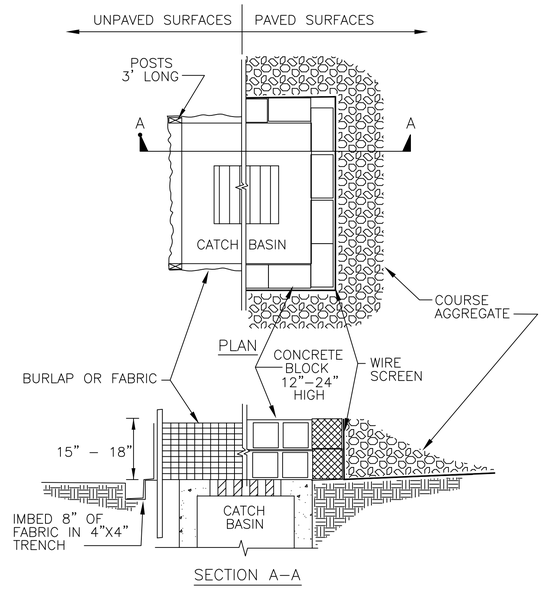

BASIN PROTECTION (BP)

NOT TO SCALE

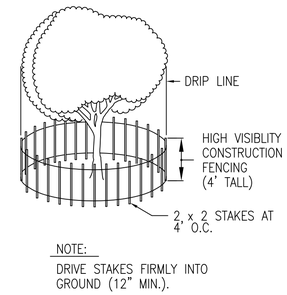

TREE PROTECTION DETAIL

N.T.S.

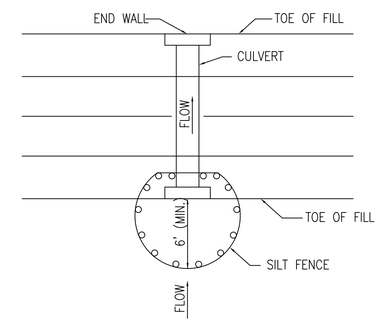

CULVERT INLET PROTECTION

N.T.S.

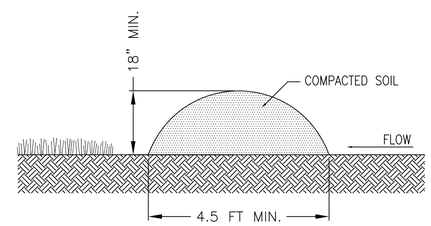

DIVERSION DIKE

N.T.S.

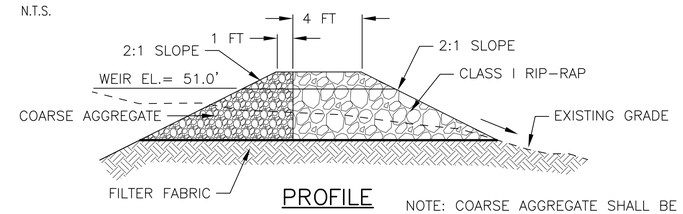

PROFILE

NOTE: COARSE AGGREGATE SHALL BE VDOT #3, #357 OR #5.

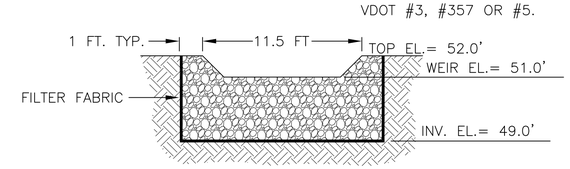

CROSS SECTION

TEMPORARY SEDIMENT TRAP OUTFALL

NOT TO SCALE

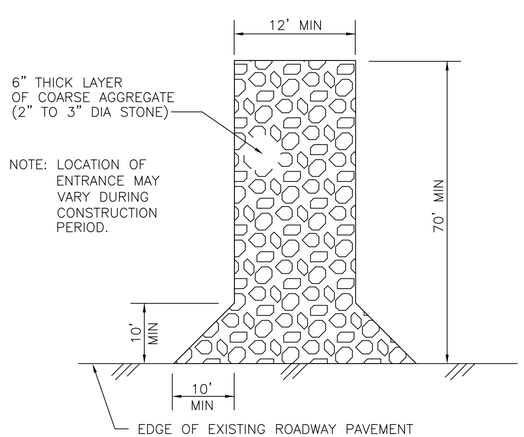

TEMPORARY CONSTRUCTION ENTRANCE

NOT TO SCALE

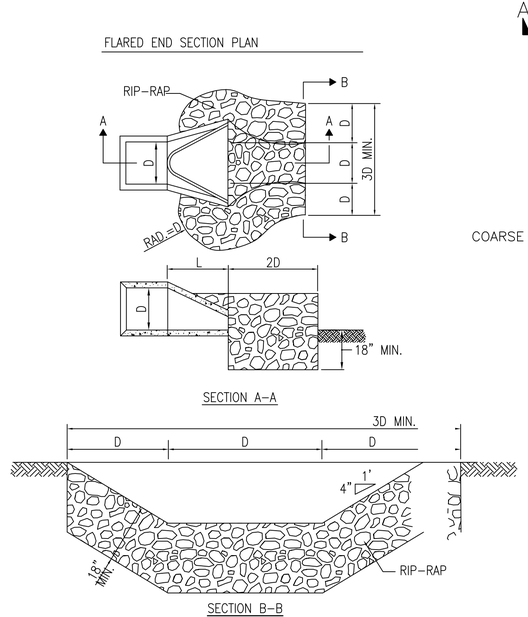

DISCHARGE AREA EROSION CONTROL DETAIL

N.T.S.

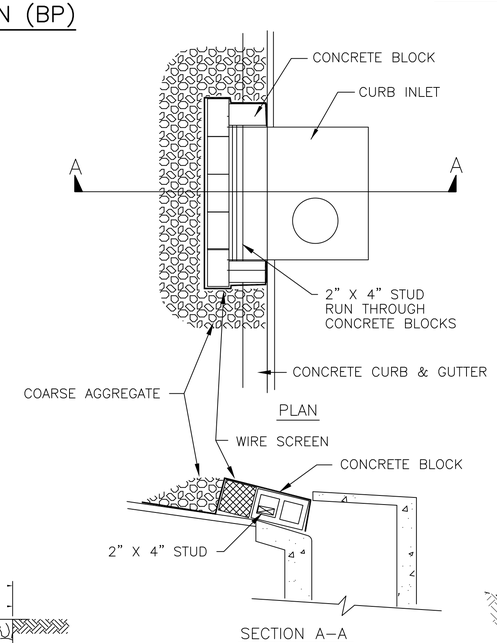

INLET PROTECTION (IP)

NOT TO SCALE

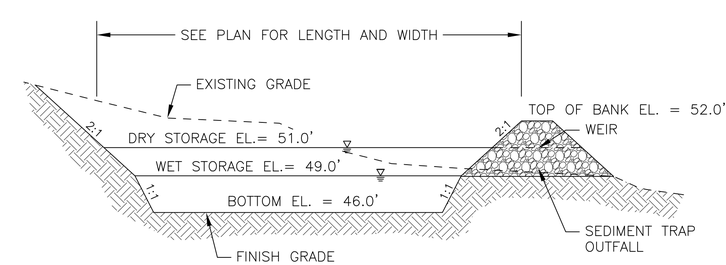

TEMPORARY SEDIMENT TRAP CROSS SECTION

NOT TO SCALE

SYM	DESCRIPTION	DATE	APPR

NAVFAC

SEAL

A/E INFO

APPROVED

FOR COMMANDER NAVFAC

ACTIVITY

LT. TREVOR BINGHAM

SATISFACTORY TO DATE 4/19/13

DES RWP DRW RWP CHK BJL

DM CWR

BRANCH MANAGER

CHIEF ENG/ARCH

FIRE PROTECTION

NAVAL FACILITIES ENGINEERING COMMAND

DEPARTMENT OF THE NAVY
NAVAL FACILITIES ENGINEERING COMMAND MID-ATLANTIC
NAVAL STATION NORFOLK, NORFOLK, VIRGINIA
HAMPTON ROADS IPT
U.S. NAVAL WEAPONS STATION YORKTOWN
YORKTOWN, VIRGINIA

MCSFR CONSOLIDATION
P-989 ARMORY

EROSION CONTROL DETAILS

SCALE: AS NOTED

EPROJECT NO.: 1113914

CONSTR. CONTR. NO.

NAVFAC DRAWING NO. 12646156

SHEET 25 OF 114

C-504

DRAWFORM REVISION: 10 MARCH 2009

FILE NAME: D:\Documents and Settings\robert.w.price\Desktop\P-989 ARMORY\P989_111391_C-501-C-508.dwg LAYOUT NAME: C-504 PLOTTED: Wednesday, May 01, 2013 - 3:01pm USER: robert.w.price

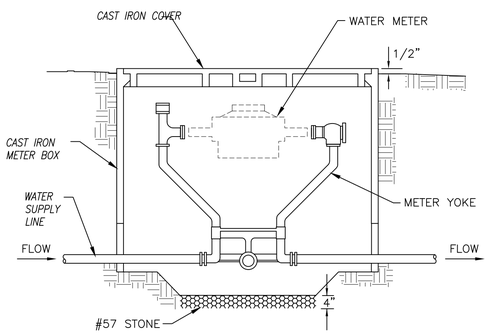

CAST IRON WATER METER BOX AND COVER

NOT TO SCALE

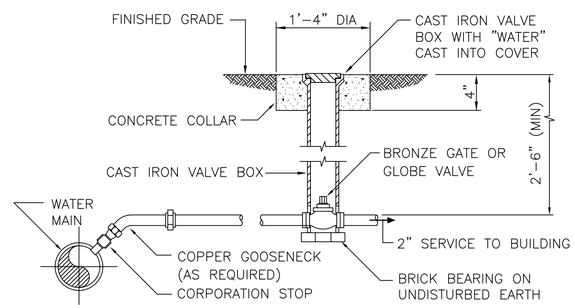

DETAIL-WATER CONNECTION

NOT TO SCALE

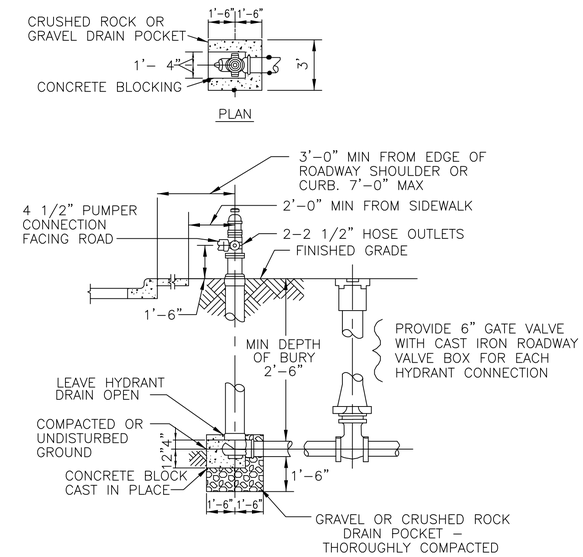

FIRE HYDRANT

NOT TO SCALE

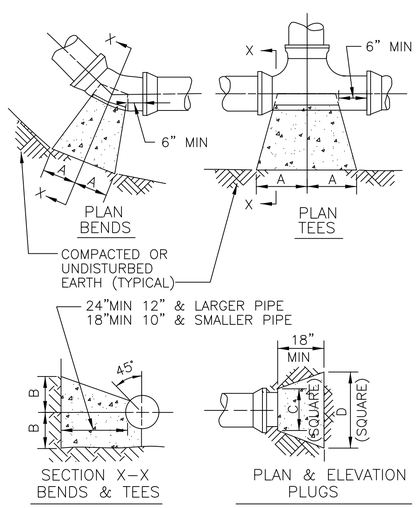

SIZE	1/4 BENDS		1/8 BENDS		1/16 BENDS		TEES		PLUGS	
	A	B	A	B	A	B	A	B	C	D
6"	16"	10"	9"	10"	6"	8"	10"	12"	10"	21"
8"	22"	13"	12"	13"	8"	10"	13"	16"	12"	29"
10"	26"	17"	14"	17"	10"	13"	16"	20"	14"	36"
12"	29"	21"	16"	21"	11"	16"	18"	24"	16"	41"
14"	35"	24"	19"	24"	12"	20"	22"	27"	18"	48"
16"	38"	27"	21"	27"	12"	24"	24"	30"	20"	54"

THRUST BLOCKS

NOT TO SCALE

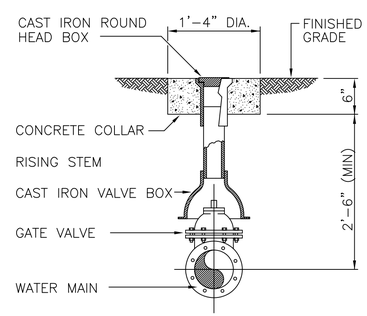

DETAIL-VALVE

NOT TO SCALE

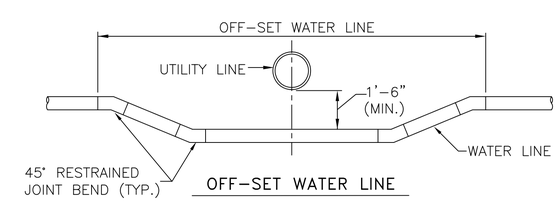

UTILITY LINE CROSSING

NOT TO SCALE

SYM	DESCRIPTION	DATE	APPR

NAVFAC

SEAL

A/E INFO

APPROVED

FOR COMMANDER NAVFAC

ACTIVITY

LT. TREVOR BINGHAM

SATISFACTORY TO DATE 4/19/13

DES RWP DRW RWP CHK BJL

DM CWR

BRANCH MANAGER

CHIEF ENG/ARCH

FIRE PROTECTION

DEPARTMENT OF THE NAVY
NAVAL FACILITIES ENGINEERING COMMAND
HAMPTON ROADS IPT

NAVAL FACILITIES ENGINEERING COMMAND MID-ATLANTIC
NAVAL STATION NORFOLK, NORFOLK, VIRGINIA

U.S. NAVAL WEAPONS STATION YORKTOWN YORKTOWN, VIRGINIA

MCSFR CONSOLIDATION
P-989 ARMORY

WATER DISTRIBUTION DETAILS

SCALE: AS NOTED

EPROJECT NO.: 1113914

CONSTR. CONTR. NO.

NAVFAC DRAWING NO. 12646157

SHEET 26 OF 114

C-505

DRAWFORM REVISION: 10 MARCH 2009

FILE NAME: D:\Documents and Settings\robert.w.price\Desktop\P-989 ARMORY\P989_111391_C-501-C-508.dwg LAYOUT NAME: C-505 PLOTTED: Wednesday, May 01, 2013 - 3:03pm USER: robert.w.price

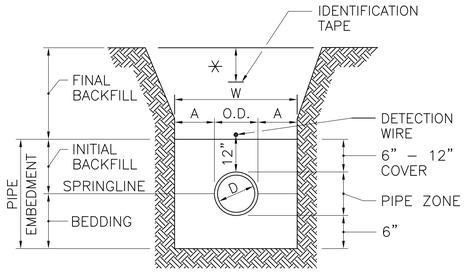

FOR PLASTIC PIPES

PIPE DIA. "D"	MAXIMUM "A"
SMALLER THAN 6"	8"
6" TO 15"	8"
16" TO 21"	10"

NOTE:

PROVIDE BEDDING IN ACCORDANCE WITH THE SPECIFICATIONS.

* 12" BELOW FINISHED GRADE IN UNPAVED AREAS. 6" BELOW TOP OF SUBGRADE IN PAVED AREAS.

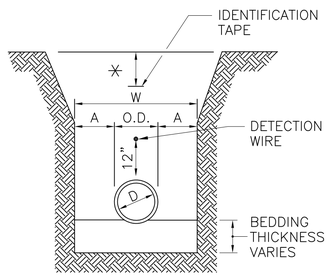

FOR NON–PLASTIC PIPES

PIPE TRENCH DETAILS

NOT TO SCALE

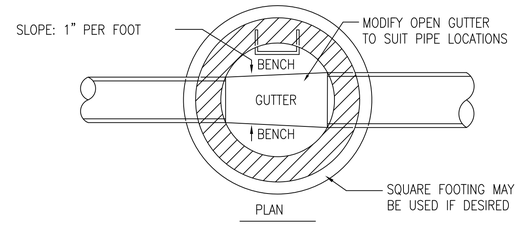

PLAN

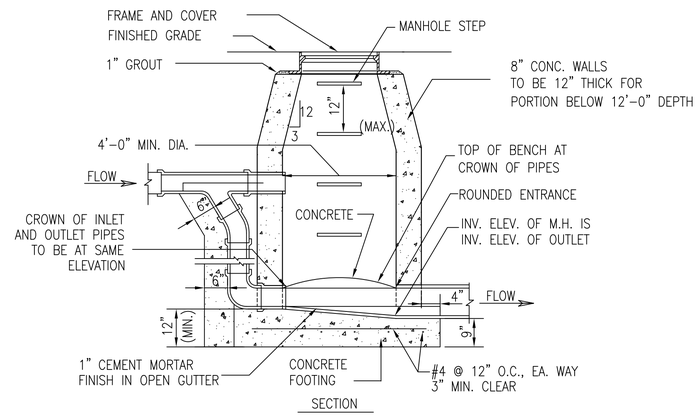

SECTION

SANITARY DROP MANHOLE–PRECAST CONCRETE

NOT TO SCALE

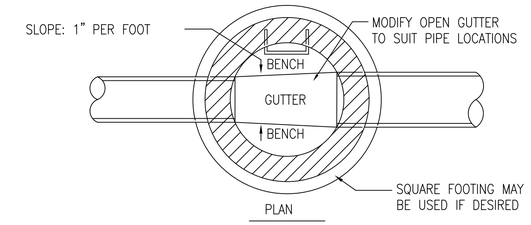

PLAN

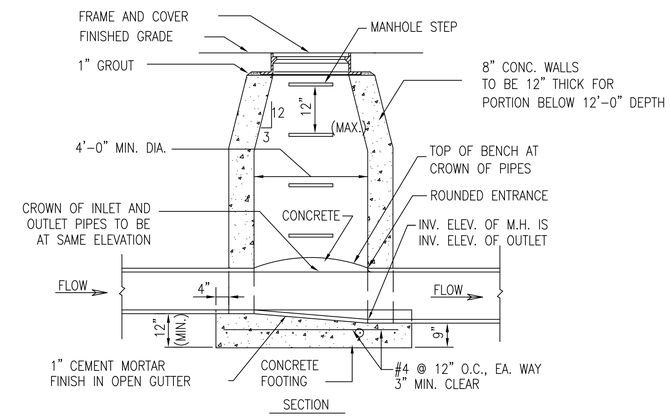

SECTION

SANITARY MANHOLE–PRECAST CONCRETE

NOT TO SCALE

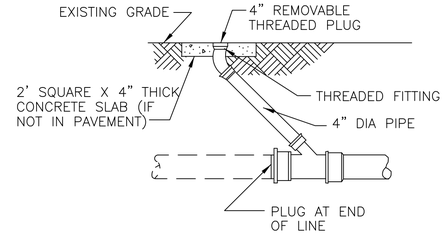

CLEANOUT DETAIL

NOT TO SCALE

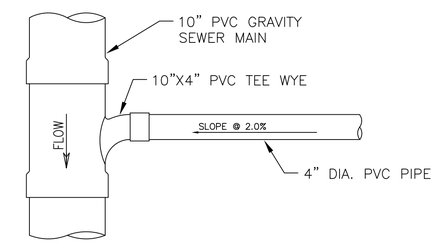

SEWER LATERAL PLAN VIEW

NOT TO SCALE

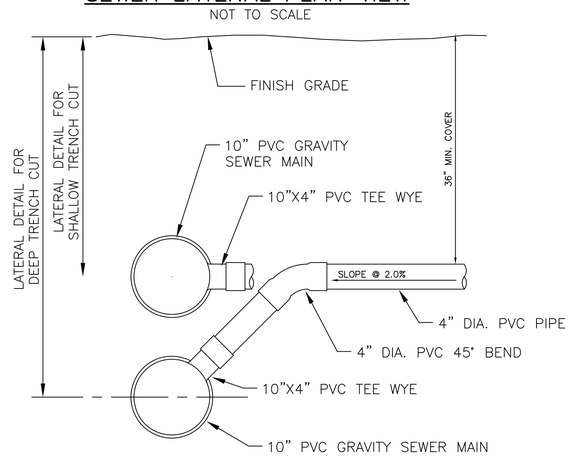

SEWER LATERAL SECTION

NOT TO SCALE

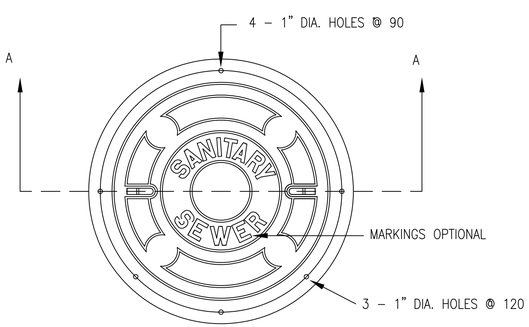

1. CASTINGS SHALL BE SHOT BLASTED.
2. CASTINGS SHALL BE FS RR–F–621E TYPE I, STYLE A, SIZE 26A AND SHALL MEET ASTM A–48–92 CLASS 30–B.
3. TOLERANCE + .125.
4. PROVIDE LIFTING PROVISIONS AS SHOWN

WATERTIGHT MANHOLE COVER

NOT TO SCALE

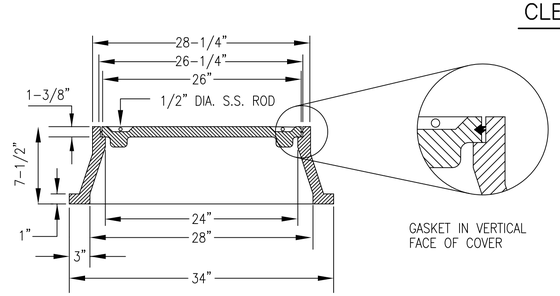

SECTION A–A

WATERTIGHT MANHOLE FRAME AND COVER

NOT TO SCALE

SYM	DESCRIPTION	DATE	APPR.

NAVFAC

SEAL

A/E INFO

APPROVED

FOR COMMANDER NAVFAC

ACTIVITY

LT. TREVOR BINGHAM

SATISFACTORY TO DATE 4/19/13

DES RWP DRW RWP CHK BJL

DM CWR

BRANCH MANAGER

CHIEF ENG/ARCH

FIRE PROTECTION

DEPARTMENT OF THE NAVY
NAVAL FACILITIES ENGINEERING COMMAND
NAVAL FACILITIES ENGINEERING COMMAND MID-ATLANTIC
NAVAL STATION NORFOLK, NORFOLK, VIRGINIA
U.S. NAVAL WEAPONS STATION YORKTOWN YORKTOWN, VIRGINIA
HAMPTON ROADS IPT

MCSFR CONSOLIDATION
P-989 ARMORY

SANITARY SEWER DETAILS

SCALE: AS NOTED

EPROJECT NO.: 1113914

CONSTR. CONTR. NO.

NAVFAC DRAWING NO. 12646158

SHEET 27 OF 114

C-506

DRAWFORM REVISION: 10 MARCH 2009

FILE NAME: D:\Documents and Settings\robert.w.price\Desktop\P-989 ARMORY\P989_111391_C-501-C-508.dwg LAYOUT NAME: C-506 PLOTTED: Wednesday, May 01, 2013 - 3:03pm USER: robert.w.price

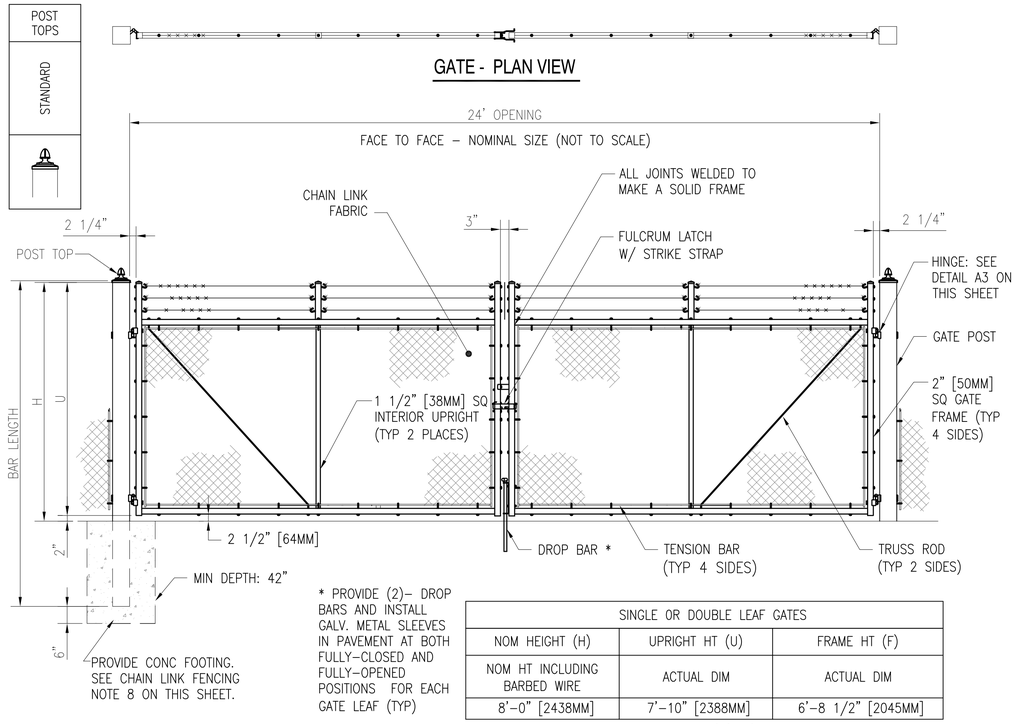

* PROVIDE (2)– DROP BARS AND INSTALL GALV. METAL SLEEVES IN PAVEMENT AT BOTH FULLY–CLOSED AND FULLY–OPENED POSITIONS FOR EACH GATE LEAF (TYP)

SINGLE OR DOUBLE LEAF GATES		
NOM HEIGHT (H)	UPRIGHT HT (U)	FRAME HT (F)
NOM HT INCLUDING BARBED WIRE	ACTUAL DIM	ACTUAL DIM
8'–0" [2438MM]	7'–10" [2388MM]	6'–8 1/2" [2045MM]

TYPICAL SWING GATE ELEVATIONS – DOUBLE W/(4) BAYS WITH ROUND POSTS & WITH BARBED WIRE

NOT TO SCALE

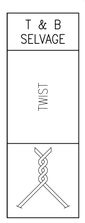

NOTE (1): A BOTTOM RAIL CAN BE ADDED FOR SECURITY, IT SHALL BE INSTALLED APPROX 3" ABOVE GRADE (A MINIMUM OF 2" AND A MAXIMUM OF 4"). HARDWARE SHALL BE WELDED OR SHOT NAILED TO POSTS AND RAILS IN ORDER TO SECURE IN PLACE. ATTACH FABRIC TO NEW BOTTOM RAIL TO ELIMINATE POSSIBILITY OF PEELING UP FABRIC.

NOTE (2): BARBED TAPE, COMPOSED OF DOUBLE COIL CONCERTINA, 30"/24"ø, STAINLESS STEEL WITH REINF WIRES, CAN BE ADDED ATOP FENCE. A SINGLE STRAND (NOT THE TYP 3) OF BARBED WIRE SHALL BE PROVIDED ON EXTENSION ARMS IN ORDER TO SUPPORT THE CONCERTINA COILS.

NOTE (3): SOME LOCATIONS MAY REQUIRE 8' OF FABRIC WITH CONCERTINA COIL ("RAZOR" WIRE) OR BARBED WIRE (3 STRAND) ABOVE.

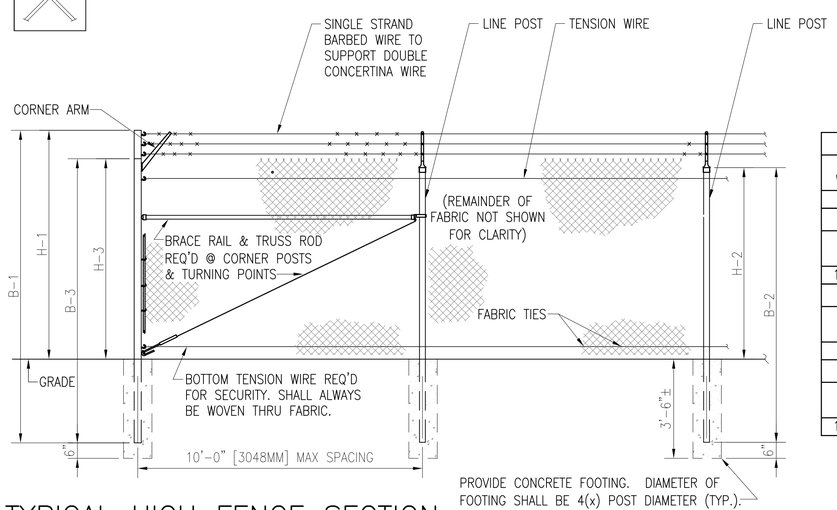

FENCE HEIGHT	
NOMINAL HEIGHT W/ BARBED WIRE	
8'–0" [2438MM]	
UPRIGHT END & CORNER POSTS	
B–1 BAR LENGTH	H–1 HEIGHT ABOVE GRADE
11'–0" [3353MM]	8'–0 5/8" [2454MM]
LINE POSTS	
B–2 BAR LENGTH	H–2 HEIGHT ABOVE GRADE
9'–8" [2946MM]	6'–8 7/8" [2054MM]
CORNER POSTS WITH CORNER ARM	
B–3 BAR LENGTH	H–3 HEIGHT ABOVE GRADE
10'–0" [3048MM]	7'–0 5/8" [2150MM]

TYPICAL HIGH FENCE SECTION

NOT TO SCALE

NOTE: IF GATE HINGES ARE NOT OPPOSING (AS SHOWN ABOVE) OR LEAF IS NOT LOCKED MECHANICALLY TO THE HINGES, WELD AN ANGLE, PLATE, OR BLOCK ABOVE HINGE TO RESTRICT LEAF FROM BEING REMOVED OR LIFTED OFF. RESTRICTION SHALL NOT HINDER OPERATION OF GATE.

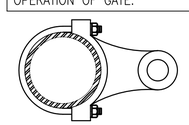

SECTION

(*) NOTE: WELD HINGES TO POST IF INSTALLING CABLE REINF ON GATES. ENSURE CORRECT GATE HEIGHT FOR FULL OPERATION PRIOR TO WELDING (TYPICAL).

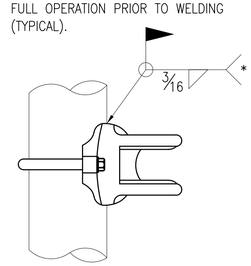

ELEVATION

HINGE DETAIL

NOT TO SCALE

CHAIN LINK FENCING NOTES

1. FABRIC: THE STANDARD FENCE FABRIC SHALL BE VINYL, ZINC OR ALUMINUM–COATED STEEL WIRE CHAIN LINK WITH MESH OPENINGS NOT LARGER THAN TWO INCHES PER SIDE AND A TWISTED AND BARBED SELVAGE AT TOP AND BOTTOM IN ACCORDANCE WITH THE SPECIFICATIONS. UTILIZE 6–GAUGE FOR BASE PERIMETER OR HEIGHTENED SECURITY ZONES AND 9–GAUGE FOR BASE INTERIOR OR WHEN JOINING AN EXISTING FENCE WHICH IS ALREADY 9–GAUGE.
2. FABRIC TIES: ONLY 12–GAUGE STEEL TIES SHALL BE USED. COATING OR PLATING WILL BE ELECTROLYTICALLY COMPATIBLE WITH THE FENCE FABRIC TO INHIBIT CORROSION.
3. REINFORCEMENT: TENSION WIRES SHALL BE INSTALLED AND INTERWOVEN (OR AFFIXED WITH FABRIC TIES) ALONG THE TOP & BOTTOM OF THE FENCE FOR STABILIZATION OF THE FENCE FABRIC.
4. FENCE HEIGHT: CHAIN LINK FABRIC SHALL BE 7' HIGH WITH AN ADDITIONAL 1' IN HEIGHT COMPOSED OF 3 STRANDS OF BARBED WIRE. THE TOTAL FENCE HEIGHT SHALL BE 8'.
5. GROUND CLEARANCE: BOTTOM OF THE FENCE FABRIC SHALL BE WITHIN TWO INCHES OF FIRM SOIL.
6. TOP GUARDS: A TOP GUARD IS AN OVERHANG OF BARBED WIRED ALONG THE TOP OF A FENCE, FACING OUTWARD (AWAY FROM PROTECTED SITE) AND UPWARD AT APPROX. 45 ANGLE. TOP GUARD SUPPORTING ARMS WILL BE PERMANENTLY AFFIXED TO THE TOP OF FENCE POSTS TO INCREASE THE OVERALL HEIGHT OF THE FENCE AT LEAST 1 FOOT. THREE STRANDS OF 12–GAUGE BARBED WIRE, EQUALLY SPACED, SHALL BE INSTALLED ON THE SUPPORTING ARMS.
7. FENCE POSTS: SHALL BE ASTM F1043 OR F1083 ROUND PIPE OR SQUARE TUBE AND SHALL BE GALVANIZED IN ACCORDANCE WITH THE SPECIFICATIONS. FENCE POST SPACING AND SIZE (DIAMETER) SHALL BE DETERMINED IN ACCORDANCE WITH CHAIN LINK FENCE MANUFACTURERS' INSTITUTE (WLG 2445). SPACING SHALL NOT EXCEED 10'–0" OC. SIZE (DIAMETER) SHALL NOT BE LESS THAN THAT SPECIFIED.
8. GATE POSTS & FOUNDATIONS: GATE POST SIZE AND ASSOCIATED FOOTING DIAMETER TO BE DETERMINED BY MANUFACTURER, BASED ON LEAF WEIGHT & DIMENSION, BUT NOT LESS THAN DIAMETER SHOWN ON THESE DRAWINGS. MINIMUM FOOTING DIAMETERS (TO BE FILLED W/4000 PSI CONC): 40" ø FOR 8" POST; 36" ø FOR 6" POST; 24" ø FOR 4" POST; OTHER SIZES TO BE DESIGNED BY MFR OR KTR. NO FOOTING WIDTH SHALL BE LESS THAN 4(X) THE POST WIDTH.

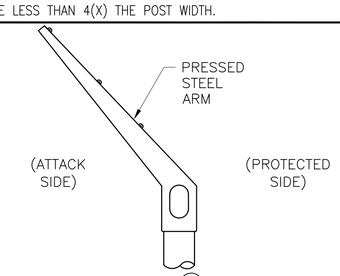

C
BARBED WIRE 45' ARM
TYP – LINE POST

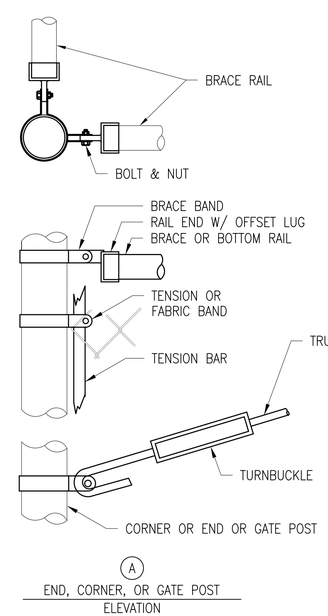

A
END, CORNER, OR GATE POST
ELEVATION

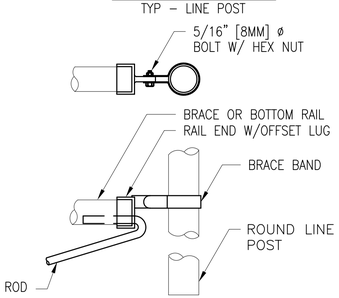

B
LINE POST
ELEVATION

FITTINGS NOTES
1. METRIC DIMENSIONS ARE NOMINAL EQUIVALENTS TO U.S. DIMENSIONS.
2. ALL FITTINGS MATERIAL SHALL BE AS SPECIFIED.

ROUND POST FITTINGS DETAILS

NOT TO SCALE

SYM	DESCRIPTION	DATE	APPR

NAVFAC

SEAL

A/E INFO

APPROVED

FOR COMMANDER NAVFAC

ACTIVITY

LT. TREVOR BINGHAM

SATISFACTORY TO DATE 4/19/13

DES RWP DRW RWP CHK BJL

DM CWR

BRANCH MANAGER

CHIEF ENG/ARCH

FIRE PROTECTION

DEPARTMENT OF THE NAVY
NAVAL FACILITIES ENGINEERING COMMAND
HAMPTON ROADS IPT
NAVAL FACILITIES ENGINEERING COMMAND MID-ATLANTIC
NAVAL STATION NORFOLK, NORFOLK, VIRGINIA
U.S. NAVAL WEAPONS STATION YORKTOWN
YORKTOWN, VIRGINIA
MCSFR CONSOLIDATION
P-989 ARMORY
SECURITY FENCE AND SWING GATES DETAILS

SCALE: AS NOTED

EPROJECT NO.: 1113914

CONSTR. CONTR. NO.

NAVFAC DRAWING NO. 12646159

SHEET 28 OF 114

C-507

DRAWFORM REVISION: 10 MARCH 2009

FILE NAME: D:\Documents and Settings\robert.w.price\Desktop\P-989 ARMORY\P989_111391_C-501-C-508.dwg LAYOUT NAME: C-507 PLOTTED: Wednesday, May 01, 2013 - 3:03pm USER: robert.w.price

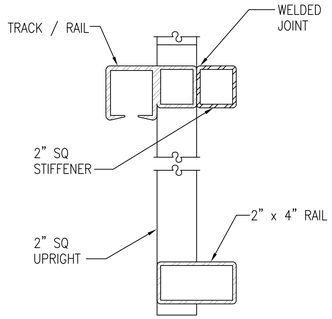

SECTION (TYP)

A4

NOT TO SCALE

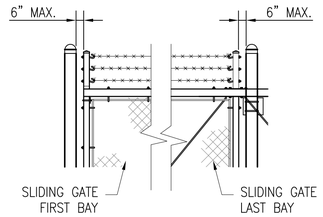

CANTILEVER GATE POST CLEARANCE

NOT TO SCALE

CANTILEVER GATE NOTES

1. CONSIDERATION: PER PAGE 29 OF UFC 4-22-03. THE GUIDANCE SUGGESTS USING BIPARTING GATES (2 CANTILEVERS MEETING IN CENTER OF THE OPENING WHEN FULLY EXTENDED) FOR ALL OPENINGS OVER 24'. THIS CONGIFURATION CAN ACHIEVE A 48' OPENING. ADDITIONAL SPACE IS REQ'D ON BOTH SIDES, SO NOT IDEAL FOR ALL LOCATIONS. IT DOES ALLOW FOR THE RESTRICTION OF TRAFFIC IN EITHER DIRECTION.

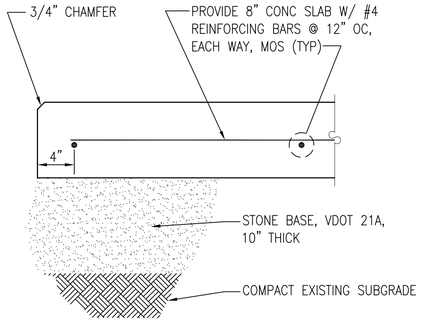

TURNSTILE MOUNTING SLAB

NOT TO SCALE

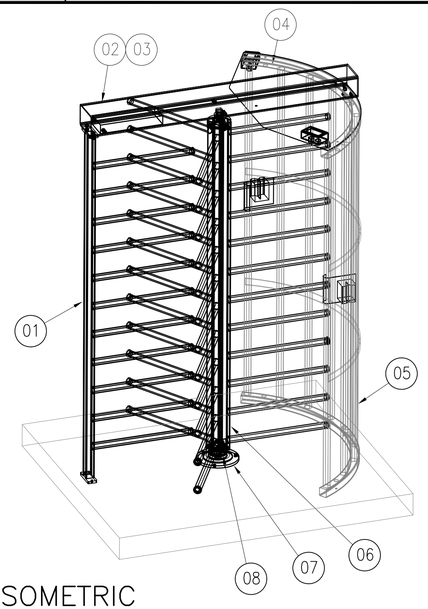

ISOMETRIC

NOT TO SCALE

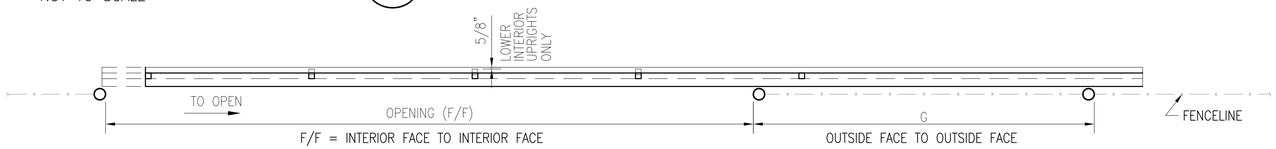

GATE PLAN

NOT TO SCALE

SAMPLING OF SIZES:

OPENING (F/F)	NOMINAL HEIGHT (H)	LENGTH (L)	GATE POSTS (G)	BAYS / OVERHANG
37'-0" [11278MM]	8'-0" [2438MM]	53'-3" [16231MM]	16'-0" [4877MM]	5 (FABRIC) / 2 (W/O)
30'-0" [9144MM]	8'-0" [2438MM]	42'-3" [12878MM]	12'-0" [3658MM]	4 (FABRIC) / 2 (W/O)

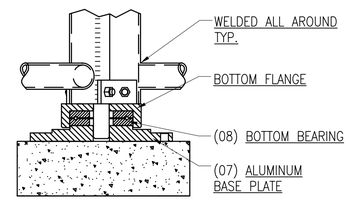

BOTTOM BEARING DETAIL

NOT TO SCALE

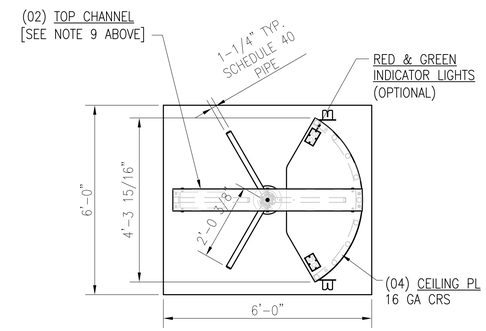

PLAN VIEW

NOT TO SCALE

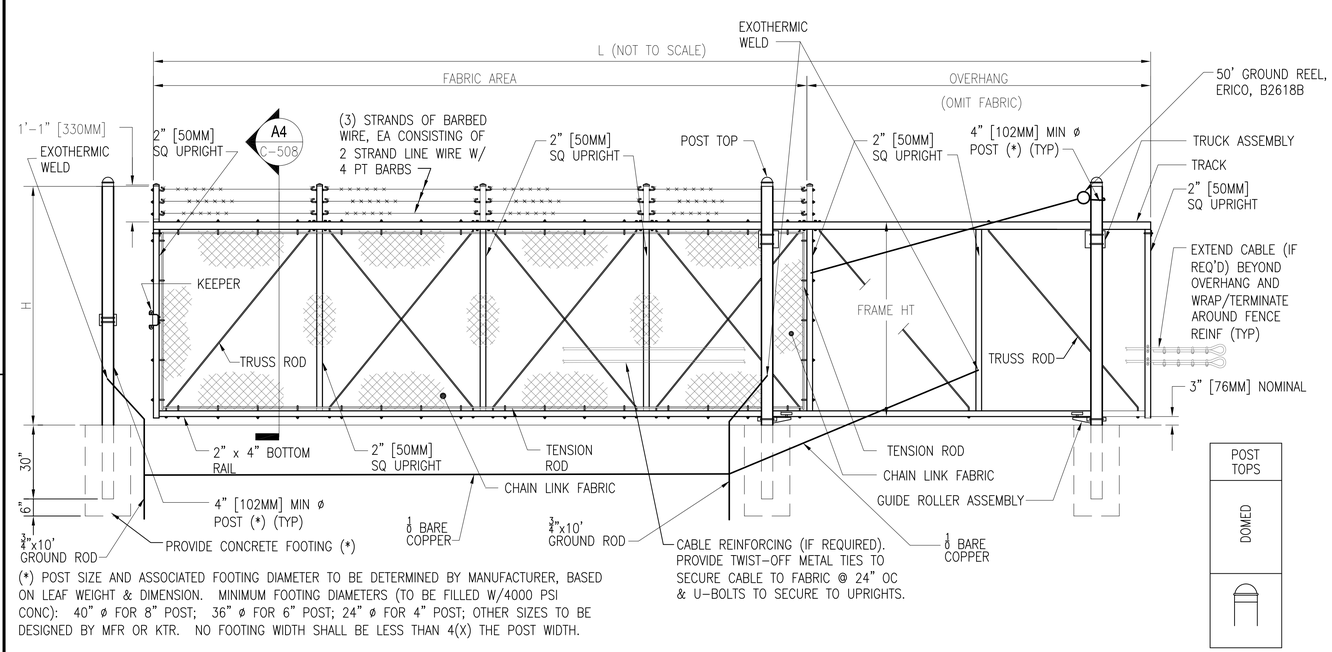

(*) POST SIZE AND ASSOCIATED FOOTING DIAMETER TO BE DETERMINED BY MANUFACTURER, BASED ON LEAF WEIGHT & DIMENSION. MINIMUM FOOTING DIAMETERS (TO BE FILLED W/4000 PSI CONC): 40" ø FOR 8" POST; 36" ø FOR 6" POST; 24" ø FOR 4" POST; OTHER SIZES TO BE DESIGNED BY MFR OR KTR. NO FOOTING WIDTH SHALL BE LESS THAN 4(X) THE POST WIDTH.

TYPICAL SINGLE CANTILEVERED SLIDING GATE ELEVATION – (4) BAYS SHOWN

NOT TO SCALE

WITH ROUND POSTS & WITH BARBED WIRE

TURNSTILE NOTES:

1. TURNSTILE SHALL BE COMPOSED OF CARBON STEEL. ALL MATERIALS SHALL BE HOT-DIPPED GALVANIZED IN ACCORDANCE WITH ASTM A123.

2. TURNSTILE SHALL HAVE BI-DIRECTIONAL CONTROLS: IN THE CASE OF A POWER FAILURE, OUTBOUND TRAFFIC SHALL BE SET TO "FAIL SAFE"; THE INBOUND TRAFFIC WILL HAVE A "FAIL LOCK" MECHANISM (UNLESS OTHERWISE DIRECTED BY THE ACTIVITY VIA THE CONTRACTING OFFICER).

3. PROVIDE CARD READER FOR BOTH SIDES (INBOUND & OUTBOUND) OF TURNSTILE.

4. BRACE BARRIER POST AT TOP TO ADJACENT VERTICAL SURFACE.

5. ALLOW 5 INCH CLEARANCE ABOVE TOP OF TURNSTILE TO REMOVE LIFT-OFF TYPE TOP COVER.

6. CONCRETE MOUNTING SLAB MUST BE LEVEL WITHIN 1/4". SEE DETAIL C2 THIS SHEET FOR CONC MOUNTING PAD.

7. CONTRACTOR SHALL PROVIDE AN ELECTRICAL 3-ROTOR FULL HEIGHT TURNSTILE.

8. TURNSTILE SHALL HAVE FINISH TO MATCH ADJACENT FENCEWORK: POWDER COATED BLACK FOR ORNAMENTAL FENCE AND GALVANIZED FOR CHAIN-LINK.

9. INSTALL 3 STRANDS BARBED WIRE OR CONCERTINA WIRE OVER TOP CHANNEL OF TURNSTILE (BETWEEN ADJACENT FENCE POSTS) TO HINDER SCALING UNIT.

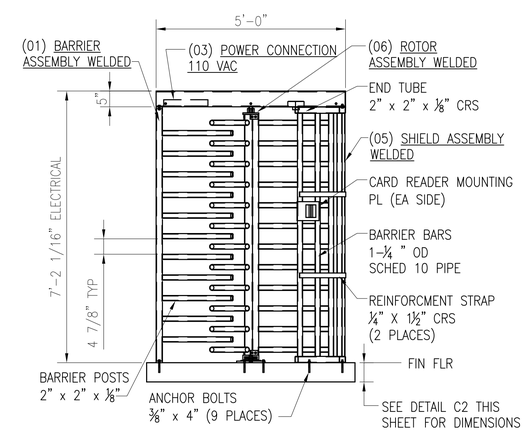

ELEVATION VIEW

NOT TO SCALE

SYM	DESCRIPTION	DATE	APPR

NAVFAC

SEAL

A/E INFO

APPROVED

FOR COMMANDER NAVFAC

ACTIVITY

LT. TREVOR BINGHAM

SATISFACTORY TO DATE 4/19/13

DES RWP DRW RWP CHK BJL

DM CWR

BRANCH MANAGER

CHIEF ENG/ARCH

FIRE PROTECTION

DEPARTMENT OF THE NAVY
NAVAL FACILITIES ENGINEERING COMMAND
HAMPTON ROADS IPT
NAVAL FACILITIES ENGINEERING COMMAND MID-ATLANTIC
NAVAL STATION NORFOLK, NORFOLK, VIRGINIA
U.S. NAVAL WEAPONS STATION YORKTOWN YORKTOWN, VIRGINIA

MCSFR CONSOLIDATION
P-989 ARMORY

SLIDING GATE AND TURNSTILE DETAILS

SCALE: AS NOTED

EPROJECT NO.: 1113914

CONSTR. CONTR. NO.

NAVFAC DRAWING NO. 12646160

SHEET 29 OF 114

C-508

DRAWFORM REVISION: 10 MARCH 2009

FILE NAME: D:\Documents and Settings\robert.w.price\Desktop\P-989 ARMORY\P989_111391_C-501-C-508.dwg LAYOUT NAME: C-508 PLOTTED: Wednesday, May 01, 2013 - 3:04pm USER: robert.w.price

MCSFR Consolidation Overall Site Layout, NWS Yorktown

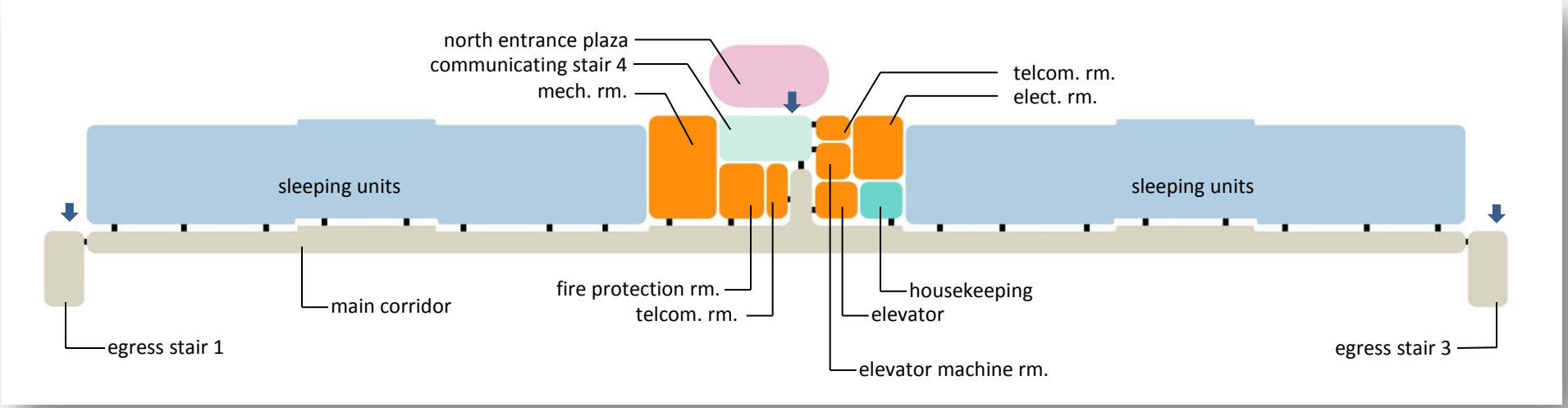

LOWER LEVEL

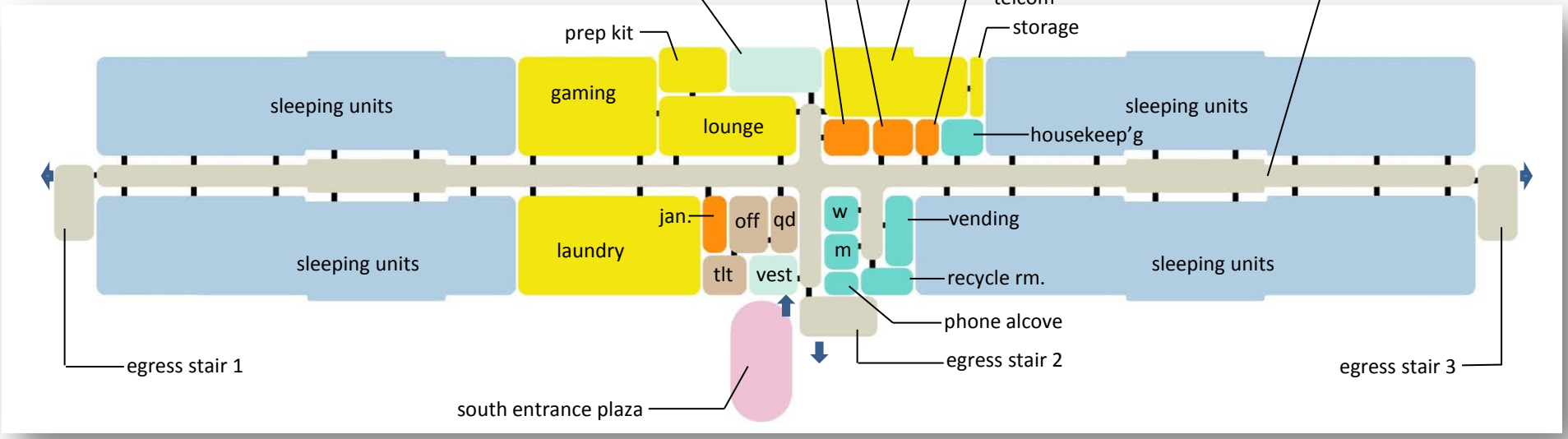

PARADE FIELD LEVEL

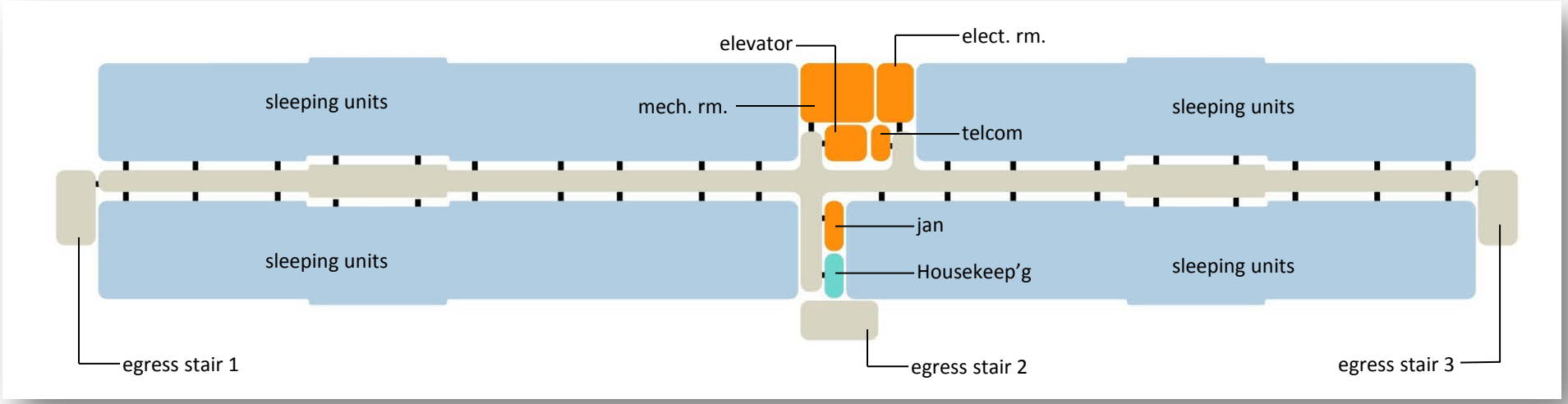

THIRD LEVEL

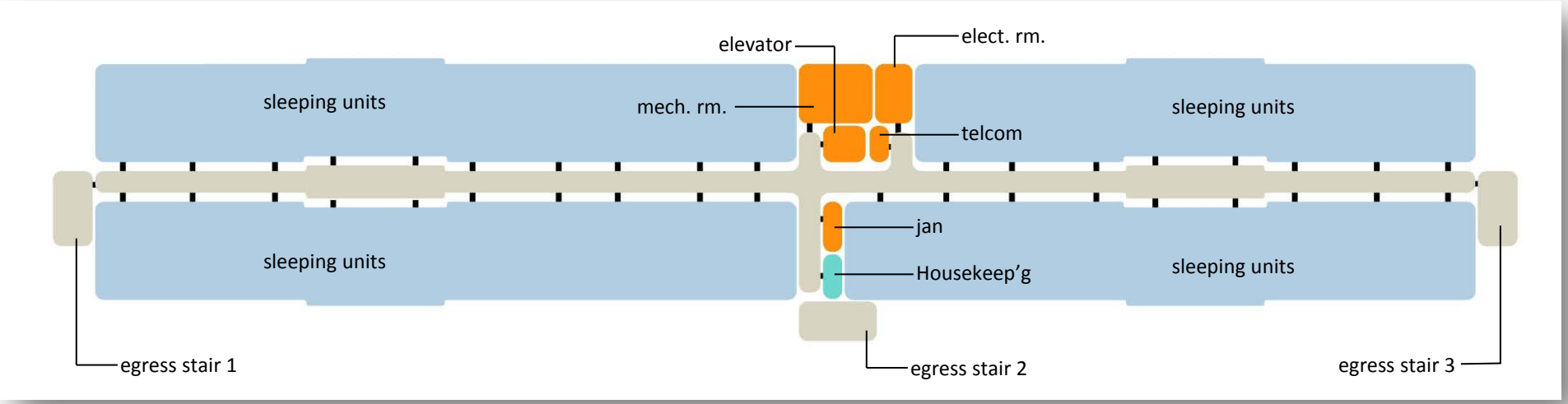

FOURTH LEVEL

E

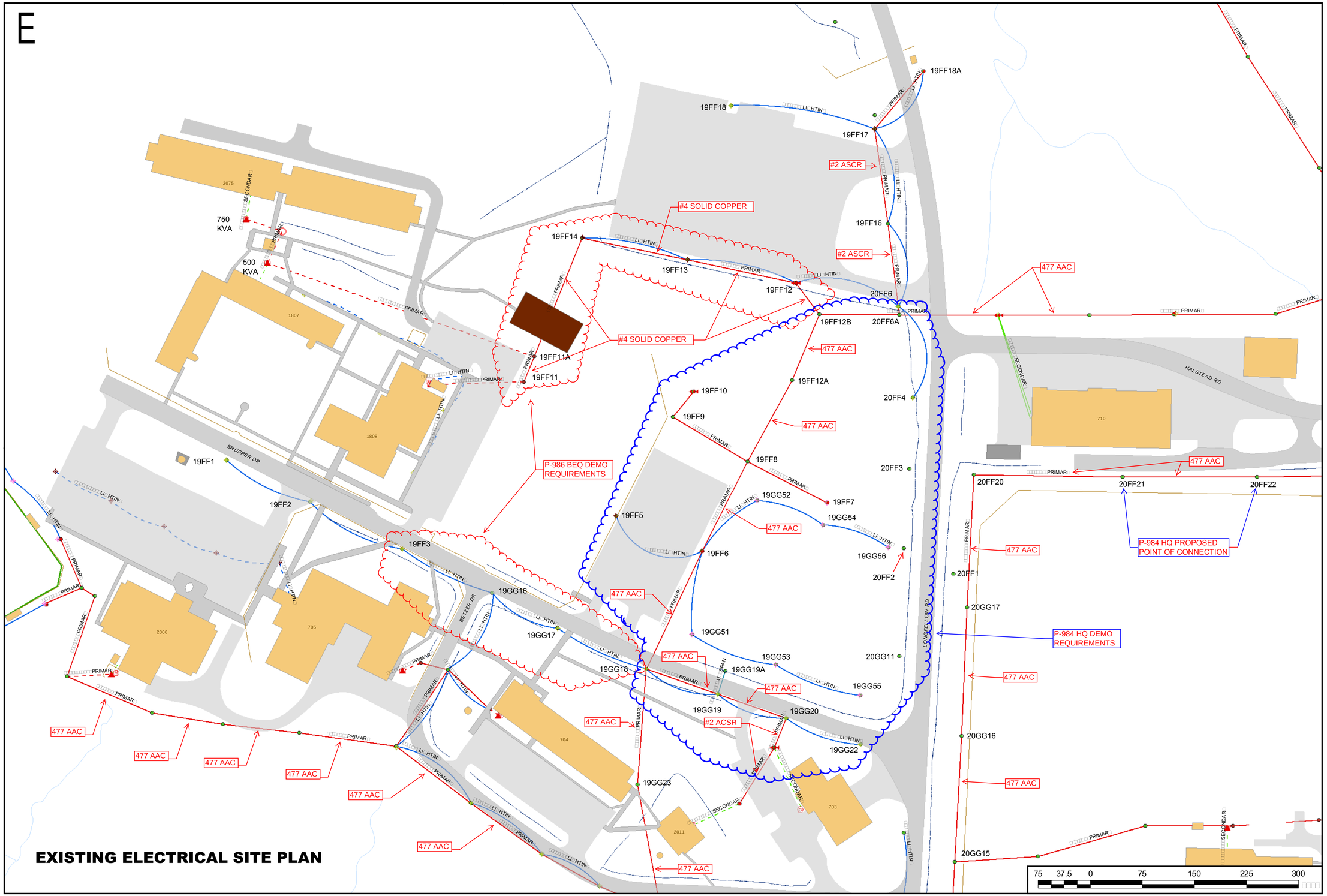

EXISTING ELECTRICAL SITE PLAN

TITLE

Commander Navy Region Mid-Atlantic GeoReadiness Center

Legend

Electric Power Pole

SubType identifier

- OTHER
- POLE
- RISER POLE
- TBD

Electric Cable

SubType identifier, instl_ty_d

- ABANDONED,
- UNSPAN, N
- UNSPAN,
- LIGHTING,
- LIGHTING,
- PRIMARY,
- PRIMARY,
- SECONDARY,
- SECONDARY,
- SERVICE,
- TBD,
- TBD,

Electric Light

SubType identifier

- UNKNOWN
- RECREATION
- PARKING LOT
- OTHER
- POLE MOUNT
- SECURITY LIGHT
- STREET LIGHT
- DAL LIGHT

GeoReadiness Center

AM- IS M A
N , VA 23511
757 341-0270

This map is generated from data contained in the CNRMA GeoReadiness Center (GRC). The information contained in CNRMA GRC is not to be construed or used as a "legal description" nor is it survey grade. Plans and maps from this database are believed to be accurate but accuracy is not guaranteed and the burden for determining accuracy, completeness, and appropriateness for use rests solely on the user accessing this information. The user acknowledges and accepts all inherent limitations of the maps and data, including the fact that they are dynamic and in a constant state of maintenance, correction and revision. Data owners should be consulted if field verification or additional information is needed.

This material is For Official Use Only. Reproduction, distribution, publication, or exhibition of this data is strictly prohibited without the written consent of the CNRMA GRC.

For a list of data owners or to access the GRC, please visit our website on the NAVFAC portal.

File Path:

SHEET INDEX

CONTENTS	SH NO	FILE NAME	REV
TITLE BLOCK, REFERENCES, AND SHEET INDEX	1	28687-000000-A160-000-YORKTOWN-000	-
LEGEND	2	28687-000000-A160-000-YORKTOWN-000	-
NAVAL WEAPONS STATION YORKTOWN - KEY PLAN	3	28687-000000-A160-000-YORKTOWN-000	-
CABLE ROUTING LAYOUT - CD101	4	28687-000000-A160-000-YORKTOWN-000	-
CABLE ROUTING LAYOUT - CD102	5	28687-000000-A160-000-YORKTOWN-000	-
CABLE ROUTING LAYOUT - CD103	6	28687-000000-A160-000-YORKTOWN-000	-
CABLE ROUTING LAYOUT - CD104	7	28687-000000-A160-000-YORKTOWN-000	-
CABLE ROUTING LAYOUT - CD105	8	28687-000000-A160-000-YORKTOWN-000	-
CABLE ROUTING LAYOUT - CD106	9	28687-000000-A160-000-YORKTOWN-000	-
CABLE ROUTING LAYOUT - CD107	10	28687-000000-A160-000-YORKTOWN-000	-
CABLE ROUTING LAYOUT - CD108	11	28687-000000-A160-000-YORKTOWN-000	-
CABLE ROUTING LAYOUT - CD109	12	28687-000000-A160-000-YORKTOWN-000	-
CABLE ROUTING LAYOUT - CD110	13	28687-000000-A160-000-YORKTOWN-000	-
CABLE ROUTING LAYOUT - CD111	14	28687-000000-A160-000-YORKTOWN-000	-
CABLE ROUTING LAYOUT - CD112	15	28687-000000-A160-000-YORKTOWN-000	-
CABLE ROUTING LAYOUT - CD113	16	28687-000000-A160-000-YORKTOWN-000	-

REVISION HISTORY

ZONE	REV	DESCRIPTION	DATE	APPROVED

DISTRIBUTION AUTHORIZED TO U.S. GOVERNMENT AGENCIES AND THEIR CONTRACTORS FOR ADMINISTRATIVE OR OPERATIONAL USE. DATE OF DETERMINATION: 10 JULY 2012. OTHER REQUESTS FOR THIS DOCUMENT SHALL BE REFERRED TO SPACE AND NAVAL WARFARE SYSTEMS COMMAND ATLANTIC, DET NORFOLK, CODE 55360.

REFERENCE INDEX

NO.	TITLE	CAGE	IA CODE	DOC OR DWG NO.	REV
8	SPACE AND NAVAL WARFARE SYSTEMS COMMAND (SPAWAR) SHORE INSTALLATION PROCESS HANDBOOK v.3.0 (OCTOBER 19, 2009)	28687	N/A	-	-
7	OUTSIDE PLANT TELECOMMUNICATIONS UPGRADE - YORKTOWN, VA. PATCH PANEL LAYOUTS	28687	A	130-000-YORKTOWN	-
6	OUTSIDE PLANT TELECOMMUNICATIONS UPGRADE - YORKTOWN, VA. LABELING DETAILS	28687	A	120-000-YORKTOWN	-
5	OUTSIDE PLANT TELECOMMUNICATIONS UPGRADE - YORKTOWN, VA. CABLE BLOCK DIAGRAMS	28687	A	070-000-YORKTOWN	-
4	OUTSIDE PLANT TELECOMMUNICATIONS UPGRADE - YORKTOWN, VA. SIMPLIFIED BLOCK DIAGRAMS	28687	A	060-000-YORKTOWN	-
3	OUTSIDE PLANT TELECOMMUNICATIONS UPGRADE - YORKTOWN, VA. FLOOR PLANS AND ELEVATIONS	28687	A	040-000-YORKTOWN	-
2	OUTSIDE PLANT TELECOMMUNICATIONS UPGRADE - YORKTOWN, VA. MASTER PARTS LIST	28687	A	022-000-YORKTOWN	-
1	OUTSIDE PLANT TELECOMMUNICATIONS UPGRADE - YORKTOWN, VA. INSTALLATION MASTER DRAWING	28687	A	020-000-YORKTOWN	-

SPAWAR APPROVAL

	SIGNATURE	DATE
PE/ISEA		05-SEP-12
REVIEWER		
APPROVAL		
APPD FOR SPAWAR		DATE

SECURE MISSION SOLUTIONS

CAGE CODE (TBD)
SECURE MISSION SOLUTION
1801 SARA DRIVE, SUITE K
CHESAPEAKE, VA 23320

DSGN T. ISMORDING	DATE 05-SEP-12
CHKD P. HAZEN	DATE 05-SEP-12
APVD	DATE

16	15	14	13	12	11	10	9	8	7	6	5	4	3	2	1	SH	REVISION STATUS OF SHEETS
-	-	-	-	-	-	-	-	-	-	-	-	-	-	-	-	REV	

INSTALLATION DESIGN PLAN (IDP)

SPACE AND NAVAL WARFARE SYSTEMS COMMAND

NAVAL WEAPONS STATION YORKTOWN
OUTSIDE PLANT TELECOMMUNICATIONS UPGRADE
CABLE ROUTING LAYOUTS

SIZE	CAGE CODE	AS-BUILT ID	IA CODE	DRAWING NO.	REV
F	28687	000000	A	160-000-YORKTOWN	-

SCALE: NONE | MASS (WEIGHT): N/A | SHEET 1 OF 16

EXISTING ELECTRIC/TELEPHONE SCHEDULE

1 E. COMM. VAULT RIM = 67.30	3 E. COMM. VAULT RIM = 60.64	5 E. COMM. VAULT RIM = 69.02
2 E. ELEC. MH. RIM = 66.00	4 E. COMM. VAULT RIM = 66.20	6 E. COMM. VAULT RIM = 71.78

EXISTING UNKNOWN UTILITY SCHEDULE

1 E. MTL. CVR. RIM = 65.57	3 E. UTIL. VAULT RIM = 71.08	5 E. DRY WELL RIM = 67.26
2 E. MH. RIM = 65.49	4 E. MH. RIM = 55.08	

EXISTING FUEL SCHEDULE

1 E. FUEL TANK RIM = 58.52	3 E. FUEL TANK RIM = 58.54
2 E. FUEL TANK RIM = 58.67	

GENERAL LEGEND:

	EXISTING (E.)
TOP OF CURB OR CONCRETE (TC) ELEVATION / ELEVATION OF GUTTER, PAVEMENT OR GROUND	TC 66.26 / 65.77
SPOT ELEVATION	+66.43
TOP OF WALL (TW) ELEVATION	+TW66.77
BITUMINOUS PAVEMENT	
BOLLARD	
BUILDING (BLDG.)	
BUSH	
CENTERLINE DITCH/SWALE	
CONCRETE (CONC.)	CONC.
CONCRETE (CONC.) PAD W/ AIR CONDITIONING UNIT	A/C
CONCRETE (CONC.) PAD W/TRANSFORMER	T
CONCRETE (CONC.) PAD W/ GENERATOR	G
CONCRETE (CONC.) PAD W/ FUEL TANK	FT
CONTOUR	60
CURB	
CURB AND GUTTER	
EDGE OF WOODS	
FLOWER BED (F.B.)	F.B.
FENCE	
GRAVEL	GRAVEL

GENERAL LEGEND:
(CONTINUED)

	EXISTING (E.)
SIGN	
TOE OF SLOPE (T.O.S.)	T.O.S.
TOP OF BANK (T.O.B.)	T.O.B.
TREE	
GAS MAIN	2" E. GAS
OVERHEAD (OH.) LINE	E. OH. LINE
SANITARY (SAN.) SEWER	8" E. SAN.
STORM (S.) SEWER	12" E. S.
UNDERGROUND (UG.) ELECTRIC (ELEC.)	E. UG. ELEC.
UNDERGROUND (UG.) FIBER OPTIC (F.O.)	E. UG. F.O.
WATER (W.) MAIN	8" E. W.
CATCH BASIN (C.B.)	E. C.B.
CLEAN OUT (C.O.)	C.O.
CONDUIT (COND.)	COND.
FIRE DEPARTMENT CONNECTION (F.D.C.)	
FIRE HYDRANT (F.H.)	
FLARED END SECTION (F.E.S.)	
GUY WIRE	
HEADWALL (HDWL.)	
LIGHT POLE IN CONCRETE	

GENERAL LEGEND:
(CONTINUED)

	EXISTING (E.)
MANHOLE (MH.)	E. MH.
METAL LIGHT POLE	
POST INDICATOR VALVE (P.I.V.)	
ROOF DRAIN (RD.)	R.D.
TELEPHONE (TEL.) PEDESTAL (PED.)	TEL. PED.
UTILITY POLE	
UTILITY POLE W/ LIGHT	
WATER METER (W.M.)	W.M.
WATER VALVE (W.V.)	W.V.
CHAIN LINK FENCE	CLF
COVER	CVR.
FINISHED FLOOR	F.F.
INACCESSIBLE	I/A
INVERT	INV.
METAL	MTL.
STRUCTURE	STRUC.
TYPICAL	TYP.
WITH	W/

DISTRIBUTION AUTHORIZED TO U. S. GOVERNMENT AGENCIES AND THEIR CONTRACTORS FOR ADMINISTRATIVE OR OPERATIONAL USE. DATE OF DETERMINATION: DD MMMM 2012. OTHER REQUESTS FOR THIS DOCUMENT SHALL BE REFERRED TO SPACE AND NAVAL WARFARE SYSTEMS COMMAND ATLANTIC, DET NORFOLK, CODE 55360.

INSTALLATION DESIGN PLAN (IDP)

SIZE	CAGE CODE	AS-BUILT ID	IA	DRAWING NO.	REV
F	28687	000000	A	160-000-YORKTOWN	-

SCALE: NONE | SHEET 2 OF 16

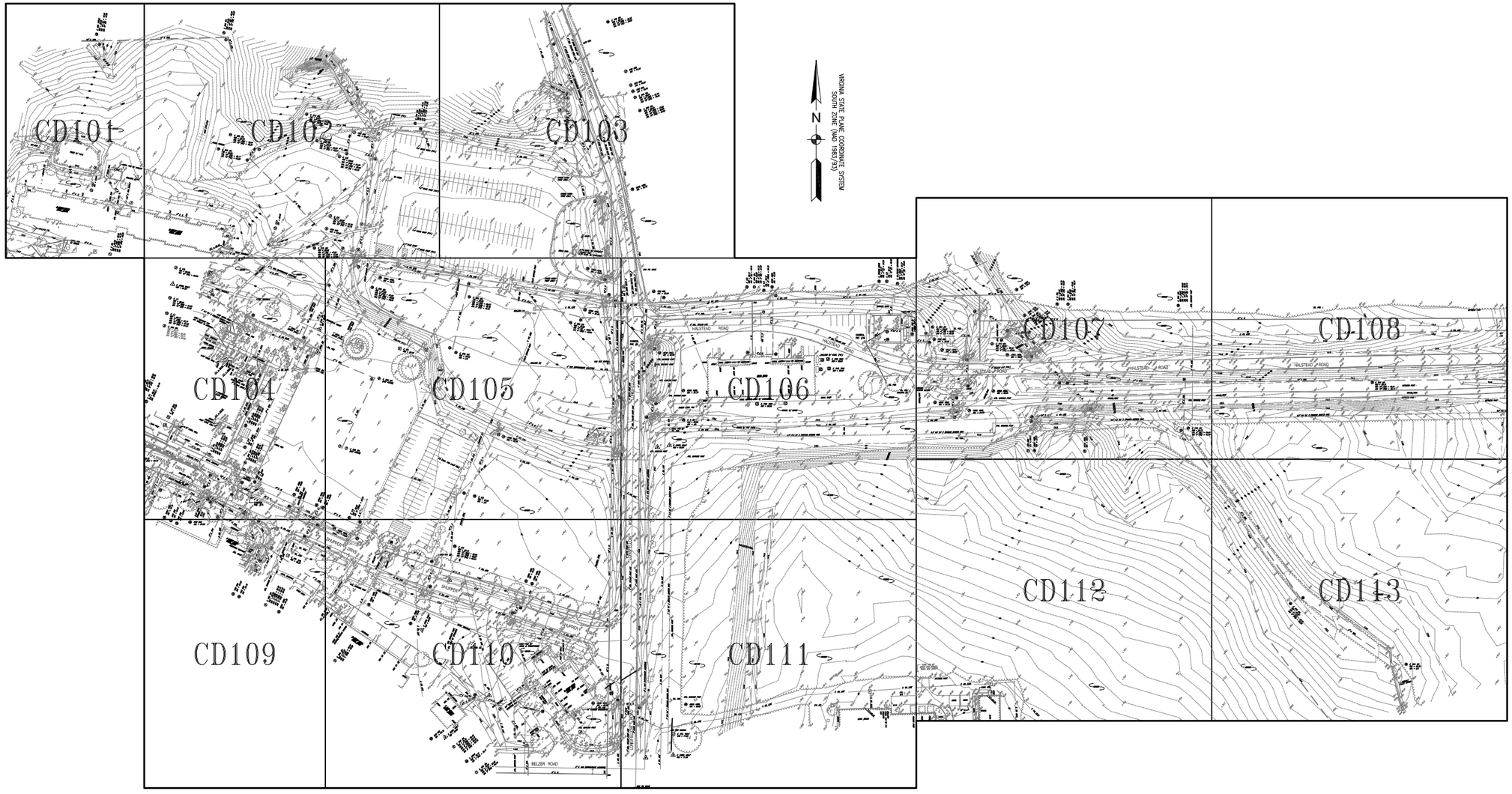

KEY PLAN
NAVAL WEAPONS STATION YORKTOWN
YORKTOWN, VIRGINIA

N. T. S.

DISTRIBUTION AUTHORIZED TO U. S. GOVERNMENT AGENCIES AND THEIR CONTRACTORS FOR ADMINISTRATIVE OR OPERATIONAL USE. DATE OF DETERMINATION: DD MMMM 2012. OTHER REQUESTS FOR THIS DOCUMENT SHALL BE REFERRED TO SPACE AND NAVAL WARFARE SYSTEMS COMMAND ATLANTIC, DET NORFOLK, CODE 55360.

INSTALLATION DESIGN PLAN (IDP)

SIZE	CAGE CODE	AS-BUILT ID	IA	DRAWING NO.	REV
F	28687	000000	A	160-000-YORKTOWN	-
SCALE: NONE					SHEET 3 OF 16

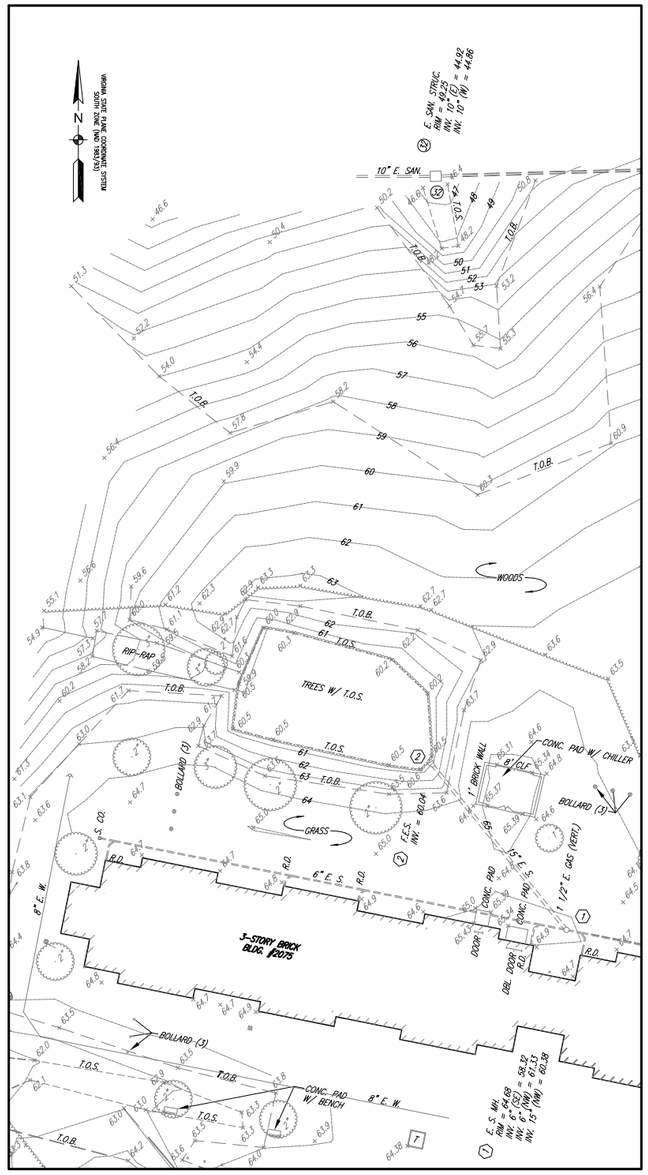

MATCH LINE - CD102

CABLE ROUTING LAYOUT - CD101
NAVAL WEAPONS STATION YORKTOWN
YORKTOWN, VIRGINIA
N. T. S.

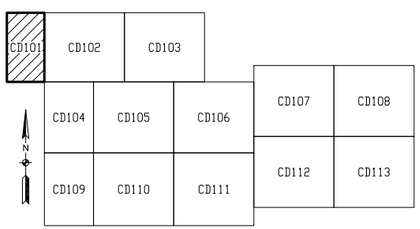

KEY PLAN
NAVAL WEAPONS STATION YORKTOWN
YORKTOWN, VIRGINIA
N. T. S.

DISTRIBUTION AUTHORIZED TO U. S. GOVERNMENT AGENCIES AND THEIR CONTRACTORS FOR ADMINISTRATIVE OR OPERATIONAL USE. DATE OF DETERMINATION: DD MMMM 2012. OTHER REQUESTS FOR THIS DOCUMENT SHALL BE REFERRED TO SPACE AND NAVAL WARFARE SYSTEMS COMMAND ATLANTIC, DET NORFOLK, CODE 55360.

INSTALLATION DESIGN PLAN (IDP)

SIZE	CAGE CODE	AS-BUILT ID	IA	DRAWING NO.	REV
F	28687	000000	A	160-000-YORKTOWN	-

SCALE: NONE | SHEET 4 OF 16

MATCH LINE - CD101

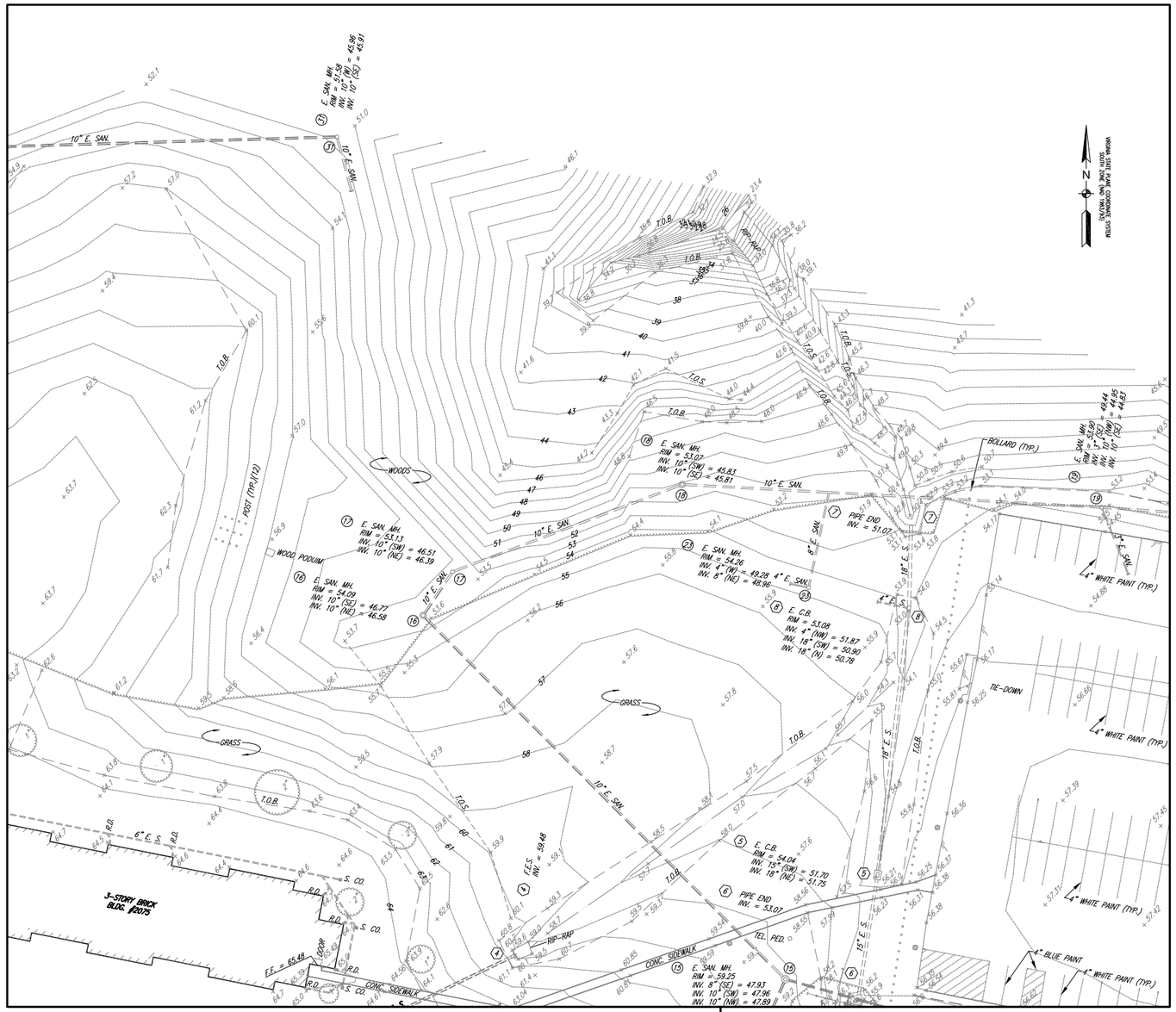

MATCH LINE - CD103

MATCH LINE - CD104

MATCH LINE - CD105

CABLE ROUTING LAYOUT - CD102
NAVAL WEAPONS STATION YORKTOWN
YORKTOWN, VIRGINIA

N. T. S.

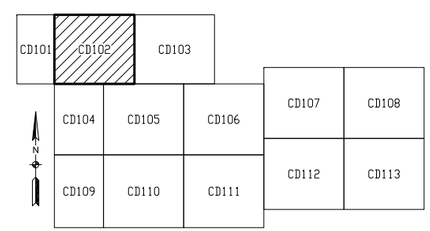

KEY PLAN
NAVAL WEAPONS STATION YORKTOWN
YORKTOWN, VIRGINIA

N. T. S.

DISTRIBUTION AUTHORIZED TO U.S. GOVERNMENT AGENCIES AND THEIR CONTRACTORS FOR ADMINISTRATIVE OR OPERATIONAL USE. DATE OF DETERMINATION: DD MMMM 2012. OTHER REQUESTS FOR THIS DOCUMENT SHALL BE REFERRED TO SPACE AND NAVAL WARFARE SYSTEMS COMMAND ATLANTIC, DET NORFOLK, CODE 55360.

INSTALLATION DESIGN PLAN (IDP)

SIZE	CAGE CODE	AS-BUILT ID	IA	DRAWING NO.	REV
F	28687	000000	A	160-000-YORKTOWN	-
SCALE: NONE					SHEET 5 OF 16

MATCH LINE - CD102

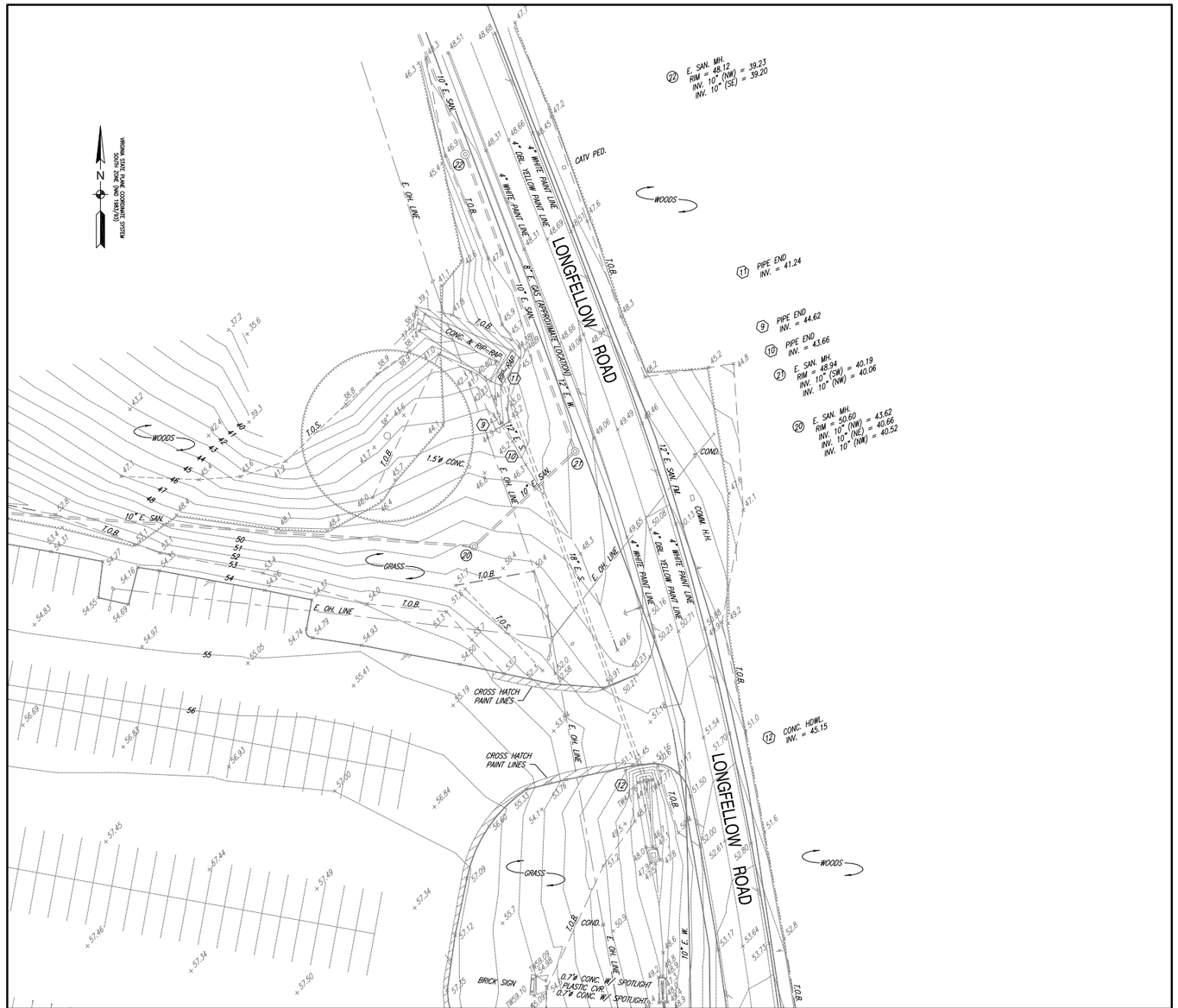

MATCH LINE - CD105

MATCH LINE - CD106

CABLE ROUTING LAYOUT - CD103
NAVAL WEAPONS STATION YORKTOWN
YORKTOWN, VIRGINIA
N. T. S.

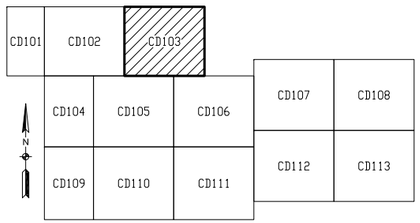

KEY PLAN
NAVAL WEAPONS STATION YORKTOWN
YORKTOWN, VIRGINIA
N. T. S.

DISTRIBUTION AUTHORIZED TO U. S. GOVERNMENT AGENCIES AND THEIR CONTRACTORS FOR ADMINISTRATIVE OR OPERATIONAL USE. DATE OF DETERMINATION: DD MMMM 2012. OTHER REQUESTS FOR THIS DOCUMENT SHALL BE REFERRED TO SPACE AND NAVAL WARFARE SYSTEMS COMMAND ATLANTIC, DET NORFOLK, CODE 55360.

INSTALLATION DESIGN PLAN (IDP)

SIZE	CAGE CODE	AS-BUILT ID	IA	DRAWING NO.	REV
F	28687	000000	A	160-000-YORKTOWN	-
SCALE: NONE					SHEET 6 OF 16

MATCH LINE - CD102

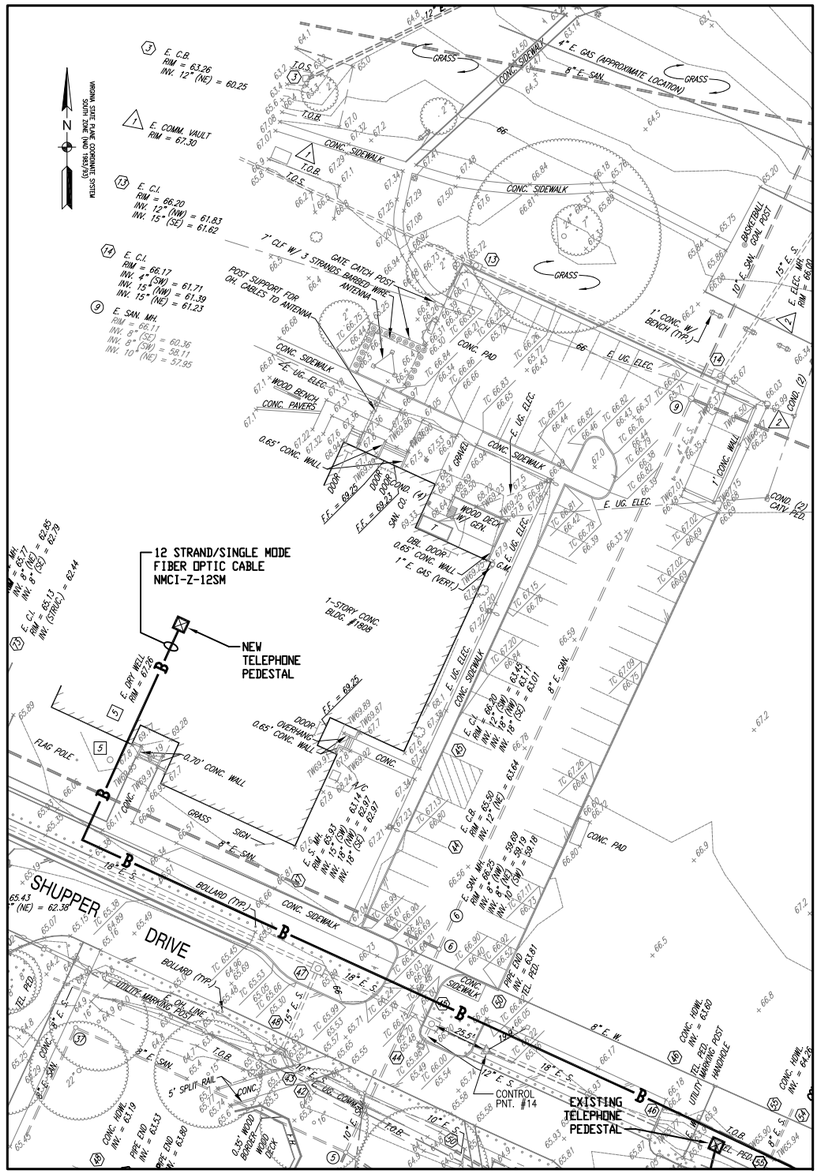

MATCH LINE - CD105

MATCH LINE - CD109

CABLE ROUTING LAYOUT - CD104
NAVAL WEAPONS STATION YORKTOWN
YORKTOWN, VIRGINIA

N. T. S.

LEGEND:

MANHOLE/HAND HOLE/PEDESTAL

BURIED CABLE — B —

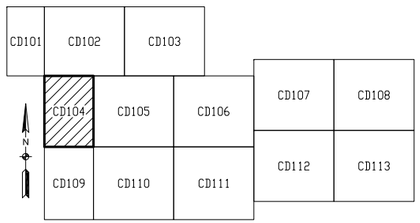

KEY PLAN
NAVAL WEAPONS STATION YORKTOWN
YORKTOWN, VIRGINIA

N. T. S.

DISTRIBUTION AUTHORIZED TO U.S. GOVERNMENT AGENCIES AND THEIR CONTRACTORS FOR ADMINISTRATIVE OR OPERATIONAL USE. DATE OF DETERMINATION: DD MMMM 2012. OTHER REQUESTS FOR THIS DOCUMENT SHALL BE REFERRED TO SPACE AND NAVAL WARFARE SYSTEMS COMMAND ATLANTIC, DET NORFOLK, CODE 55360.

INSTALLATION DESIGN PLAN (IDP)

SIZE	CAGE CODE	AS-BUILT ID	IA	DRAWING NO.	REV
F	28687	000000	A	160-000-YORKTOWN	-

SCALE: NONE | SHEET 7 OF 16

MATCH LINE - CD102

MATCH LINE - CD103

MATCH LINE - CD106

MATCH LINE - CD110

CABLE ROUTING LAYOUT - CD105
NAVAL WEAPONS STATION YORKTOWN
YORKTOWN, VIRGINIA

N. T. S.

LEGEND:

MANHOLE/HAND HOLE/PEDESTAL

BURIED CABLE — B —

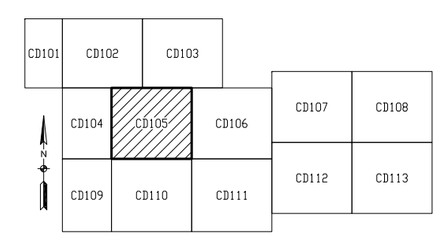

KEY PLAN
NAVAL WEAPONS STATION YORKTOWN
YORKTOWN, VIRGINIA

N. T. S.

DISTRIBUTION AUTHORIZED TO U.S. GOVERNMENT AGENCIES AND THEIR CONTRACTORS FOR ADMINISTRATIVE OR OPERATIONAL USE. DATE OF DETERMINATION: DD MMMM 2012. OTHER REQUESTS FOR THIS DOCUMENT SHALL BE REFERRED TO SPACE AND NAVAL WARFARE SYSTEMS COMMAND ATLANTIC, DET NORFOLK, CODE 55360.

INSTALLATION DESIGN PLAN (IDP)

SIZE	CAGE CODE	AS-BUILT ID	IA	DRAWING NO.	REV
F	28687	000000	A	160-000-YORKTOWN	-

SCALE: NONE | SHEET 8 OF 16

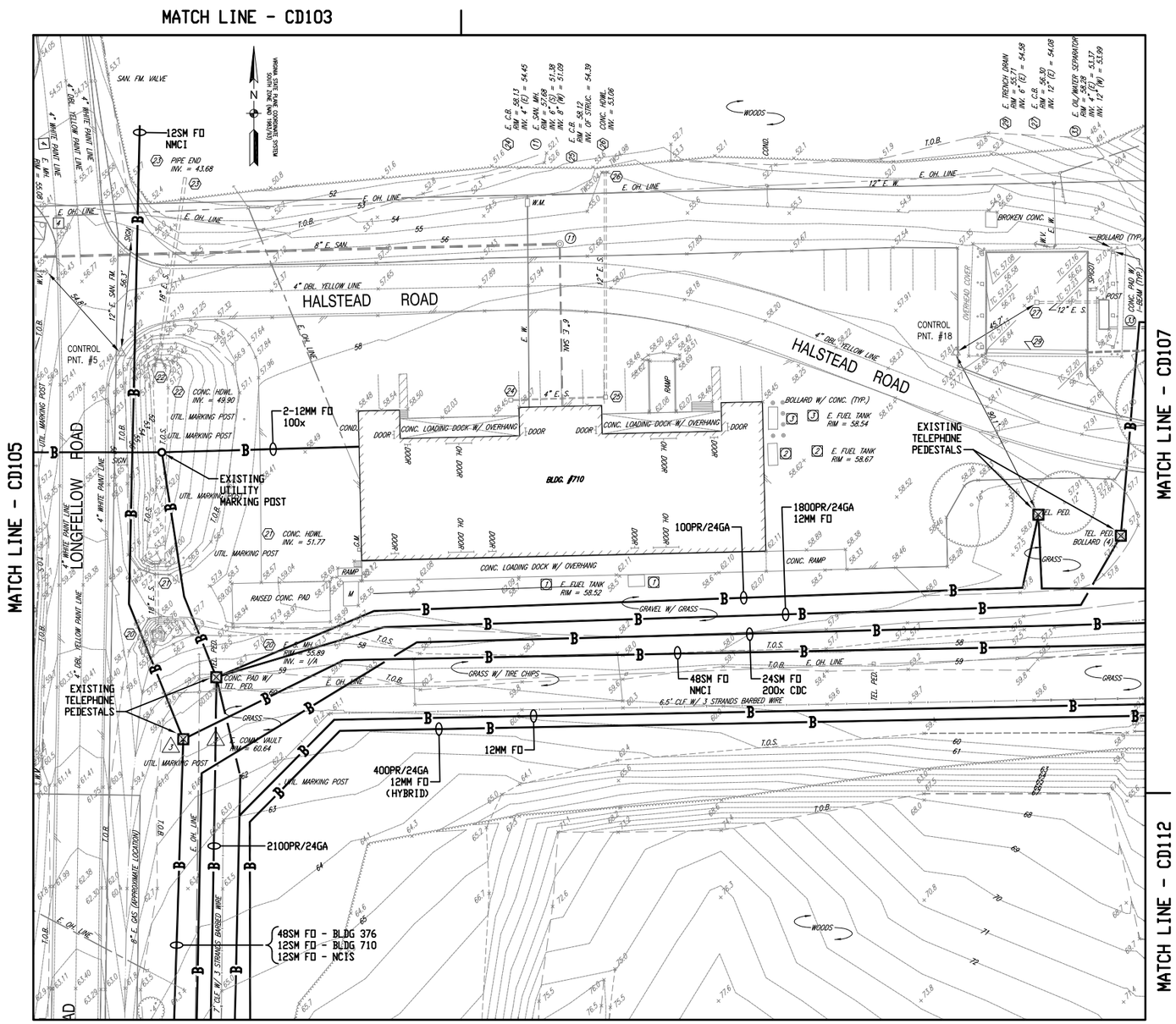

MATCH LINE - CD111

CABLE ROUTING LAYOUT - CD106
NAVAL WEAPONS STATION YORKTOWN
YORKTOWN, VIRGINIA

N. T. S.

LEGEND:

MANHOLE/HAND HOLE/PEDESTAL ⊠

BURIED CABLE —B—

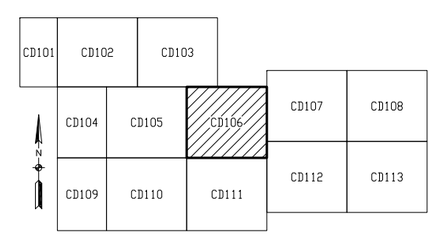

KEY PLAN
NAVAL WEAPONS STATION YORKTOWN
YORKTOWN, VIRGINIA

N. T. S.

DISTRIBUTION AUTHORIZED TO U. S. GOVERNMENT AGENCIES AND THEIR CONTRACTORS FOR ADMINISTRATIVE OR OPERATIONAL USE. DATE OF DETERMINATION: DD MMMM 2012. OTHER REQUESTS FOR THIS DOCUMENT SHALL BE REFERRED TO SPACE AND NAVAL WARFARE SYSTEMS COMMAND ATLANTIC, DET NORFOLK, CODE 55360.

INSTALLATION DESIGN PLAN (IDP)

SIZE	CAGE CODE	AS-BUILT ID	IA	DRAWING NO.	REV
F	28687	000000	A	160-000-YORKTOWN	-

SCALE: NONE SHEET 9 OF 16

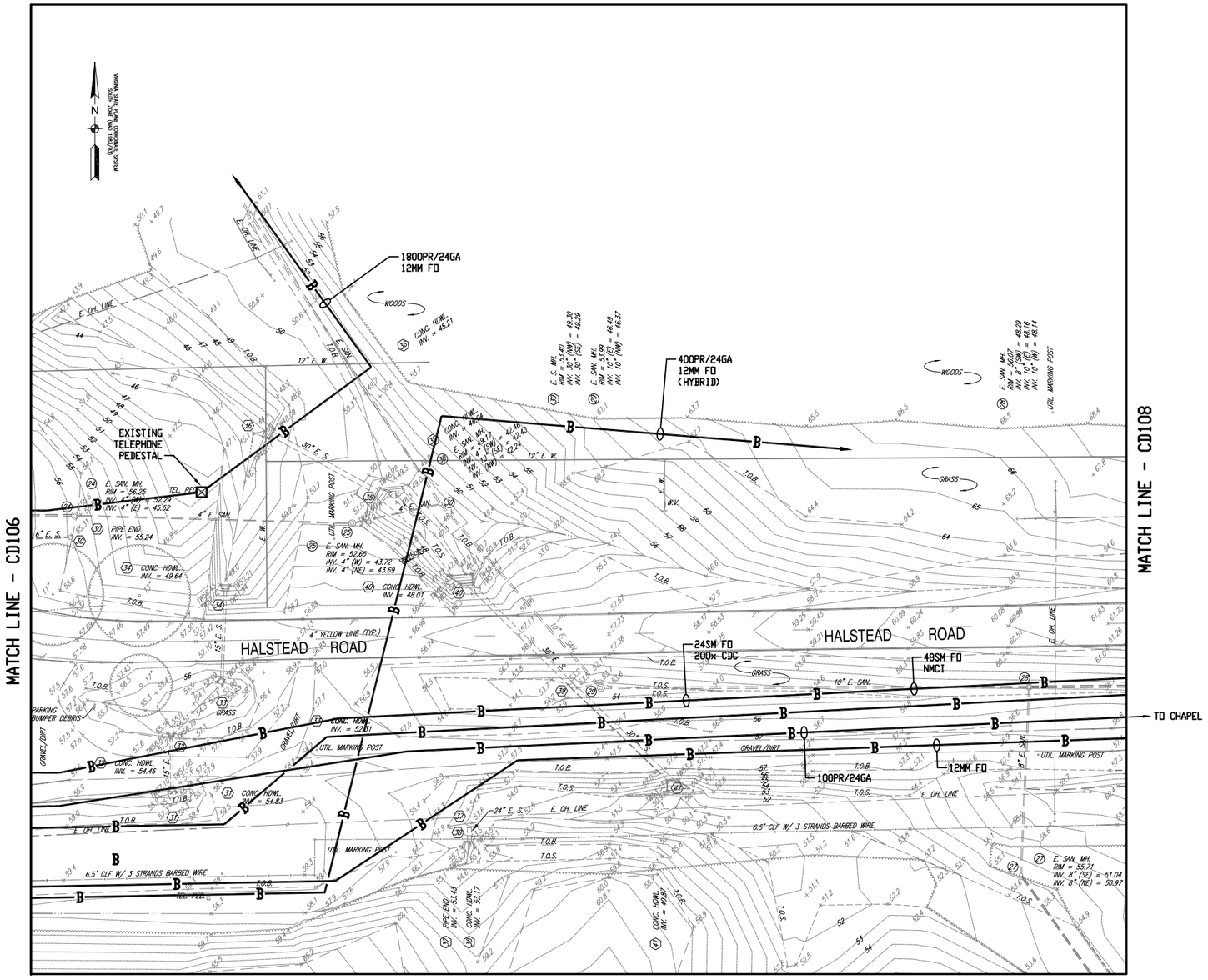

MATCH LINE - CD112

CABLE ROUTING LAYOUT - CD107
NAVAL WEAPONS STATION YORKTOWN
YORKTOWN, VIRGINIA

N. T. S.

LEGEND:

MANHOLE/HAND HOLE/PEDESTAL

BURIED CABLE

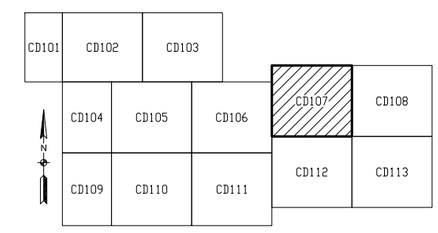

KEY PLAN
NAVAL WEAPONS STATION YORKTOWN
YORKTOWN, VIRGINIA

N. T. S.

DISTRIBUTION AUTHORIZED TO U.S. GOVERNMENT AGENCIES AND THEIR CONTRACTORS FOR ADMINISTRATIVE OR OPERATIONAL USE. DATE OF DETERMINATION: DD MMMM 2012. OTHER REQUESTS FOR THIS DOCUMENT SHALL BE REFERRED TO SPACE AND NAVAL WARFARE SYSTEMS COMMAND ATLANTIC, DET NORFOLK, CODE 55360.

GRAPHIC SCALE:

1" = 25' 25 0 25 50 100

INSTALLATION DESIGN PLAN (IDP)

SIZE	CAGE CODE	AS-BUILT ID	IA	DRAWING NO.	REV
F	28687	000000	A	160-000-YORKTOWN	-
SCALE: NONE					SHEET 10 OF 16

MATCH LINE - CD107

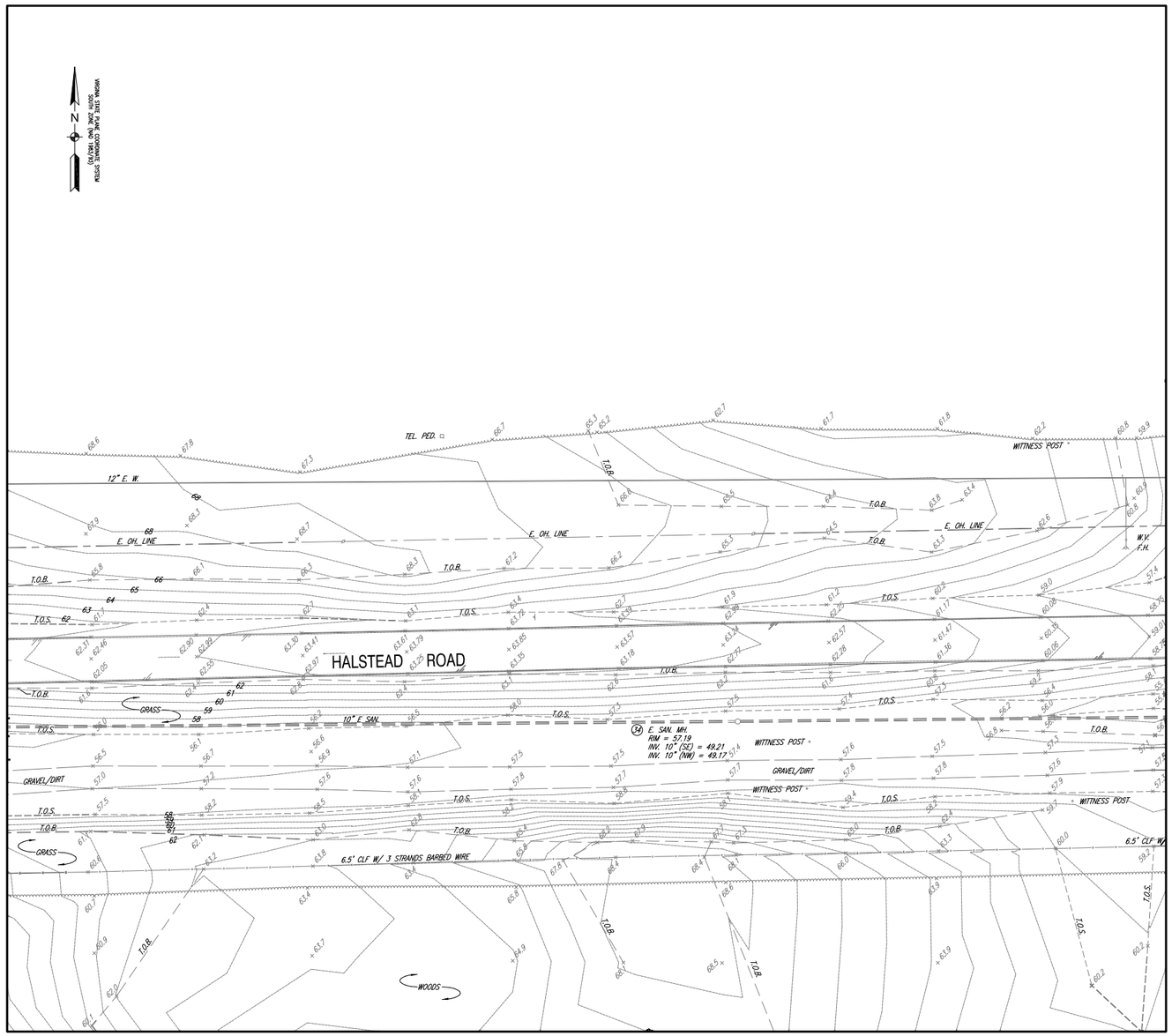

MATCH LINE - CD113

CABLE ROUTING LAYOUT - CD108
NAVAL WEAPONS STATION YORKTOWN
YORKTOWN, VIRGINIA

N. T. S.

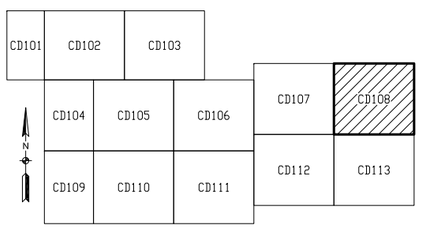

KEY PLAN
NAVAL WEAPONS STATION YORKTOWN
YORKTOWN, VIRGINIA

N. T. S.

DISTRIBUTION AUTHORIZED TO U. S. GOVERNMENT AGENCIES AND THEIR CONTRACTORS FOR ADMINISTRATIVE OR OPERATIONAL USE. DATE OF DETERMINATION: DD MMMM 2012. OTHER REQUESTS FOR THIS DOCUMENT SHALL BE REFERRED TO SPACE AND NAVAL WARFARE SYSTEMS COMMAND ATLANTIC, DET NORFOLK, CODE 55360.

INSTALLATION DESIGN PLAN (IDP)

SIZE	CAGE CODE	AS-BUILT ID	IA	DRAWING NO.	REV
F	28687	000000	A	160-000-YORKTOWN	-

SCALE: NONE | SHEET 11 OF 16

MATCH LINE - CD104

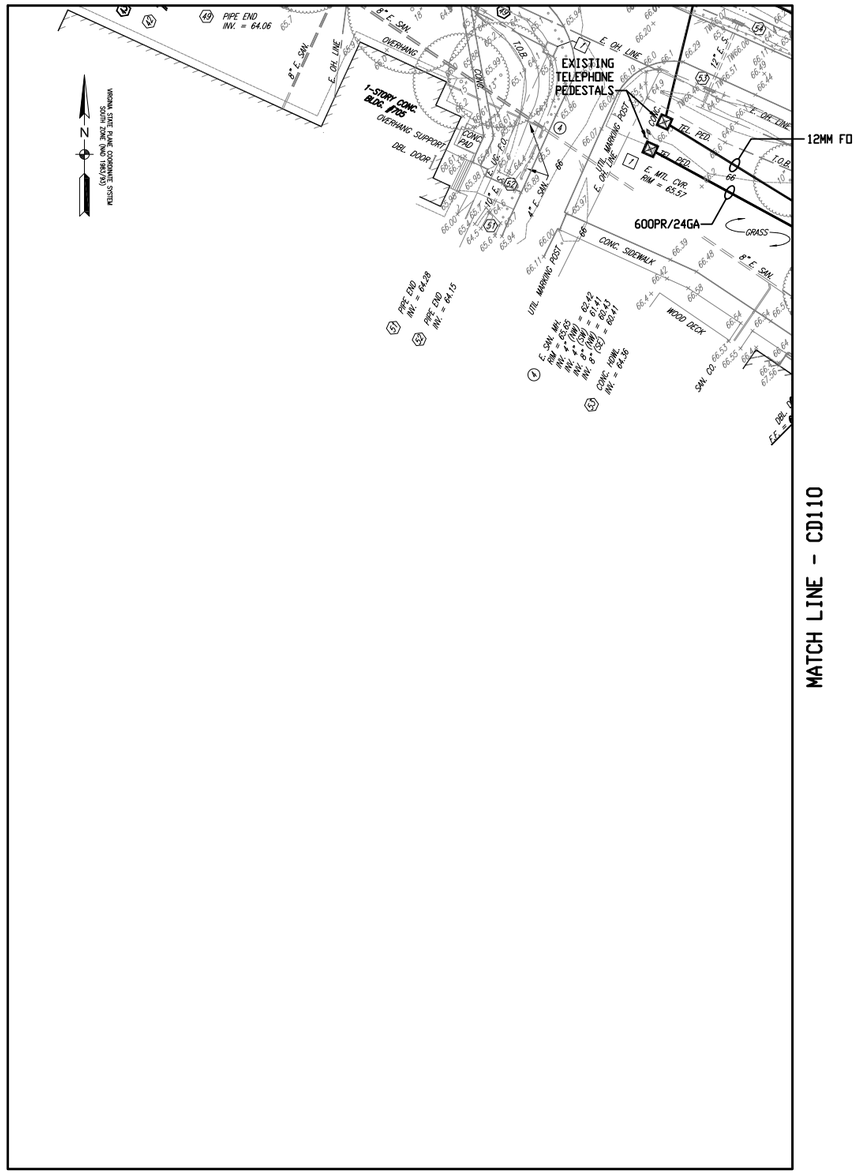

MATCH LINE - CD110

CABLE ROUTING LAYOUT - CD109
NAVAL WEAPONS STATION YORKTOWN
YORKTOWN, VIRGINIA

N. T. S.

LEGEND:

MANHOLE/HAND HOLE/PEDESTAL

BURIED CABLE

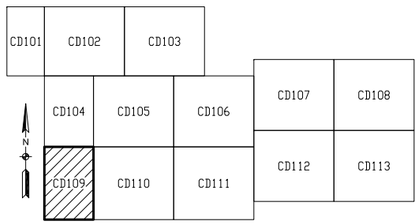

KEY PLAN
NAVAL WEAPONS STATION YORKTOWN
YORKTOWN, VIRGINIA

N. T. S.

DISTRIBUTION AUTHORIZED TO U. S. GOVERNMENT AGENCIES AND THEIR CONTRACTORS FOR ADMINISTRATIVE OR OPERATIONAL USE. DATE OF DETERMINATION: DD MMMM 2012. OTHER REQUESTS FOR THIS DOCUMENT SHALL BE REFERRED TO SPACE AND NAVAL WARFARE SYSTEMS COMMAND ATLANTIC, DET NORFOLK, CODE 55360.

INSTALLATION DESIGN PLAN (IDP)

SIZE	CAGE CODE	AS-BUILT ID	IA	DRAWING NO.	REV
F	28687	000000	A	160-000-YORKTOWN	-

SCALE: NONE | SHEET 12 OF 16

MATCH LINE - CD105

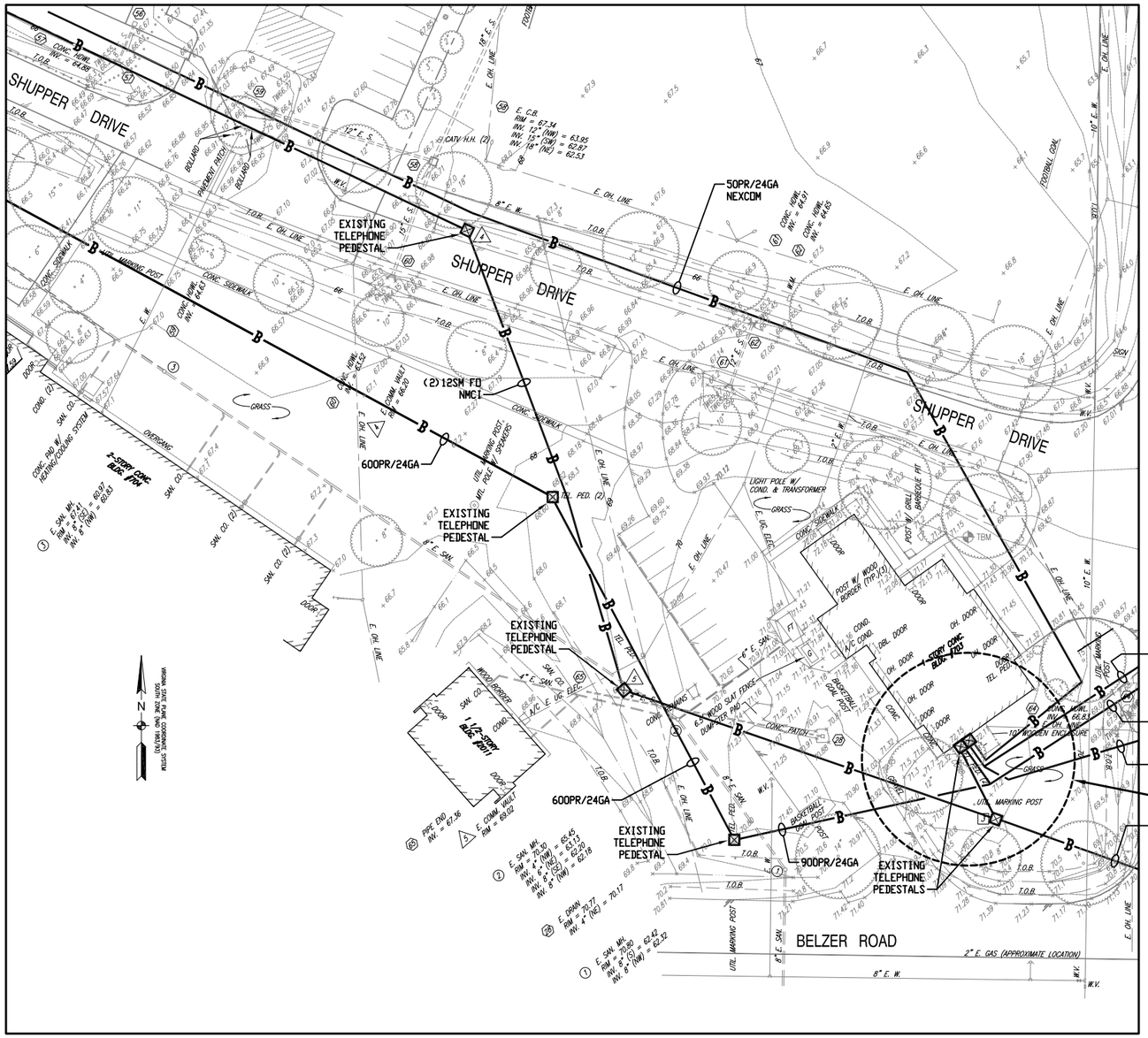

MATCH LINE - CD109

MATCH LINE - CD111

CABLE ROUTING LAYOUT - CD110
NAVAL WEAPONS STATION YORKTOWN
YORKTOWN, VIRGINIA

N. T. S.

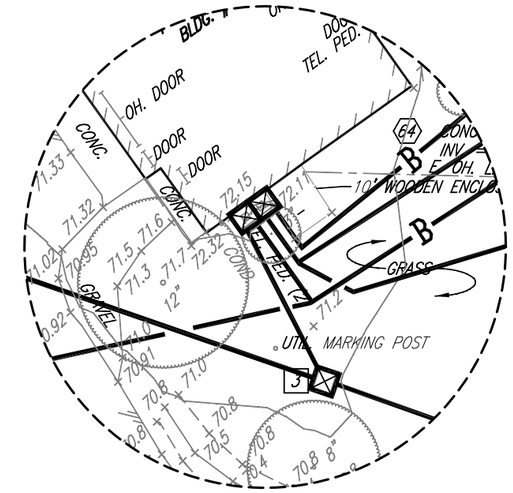

DETAIL 'A'

LEGEND:

MANHOLE/HAND HOLE/PEDESTAL ⊠

BURIED CABLE —B—

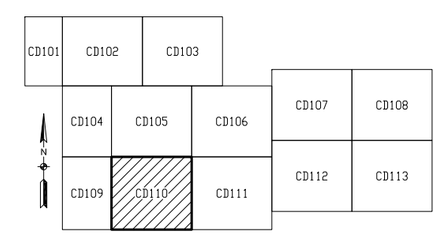

KEY PLAN
NAVAL WEAPONS STATION YORKTOWN
YORKTOWN, VIRGINIA

N. T. S.

DISTRIBUTION AUTHORIZED TO U.S. GOVERNMENT AGENCIES AND THEIR CONTRACTORS FOR ADMINISTRATIVE OR OPERATIONAL USE. DATE OF DETERMINATION: DD MMMM 2012. OTHER REQUESTS FOR THIS DOCUMENT SHALL BE REFERRED TO SPACE AND NAVAL WARFARE SYSTEMS COMMAND ATLANTIC, DET NORFOLK, CODE 55360.

INSTALLATION DESIGN PLAN (IDP)

SIZE	CAGE CODE	AS-BUILT ID	IA	DRAWING NO.	REV
F	28687	000000	A	160-000-YORKTOWN	-

SCALE: NONE SHEET 13 OF 16

MATCH LINE - CD106

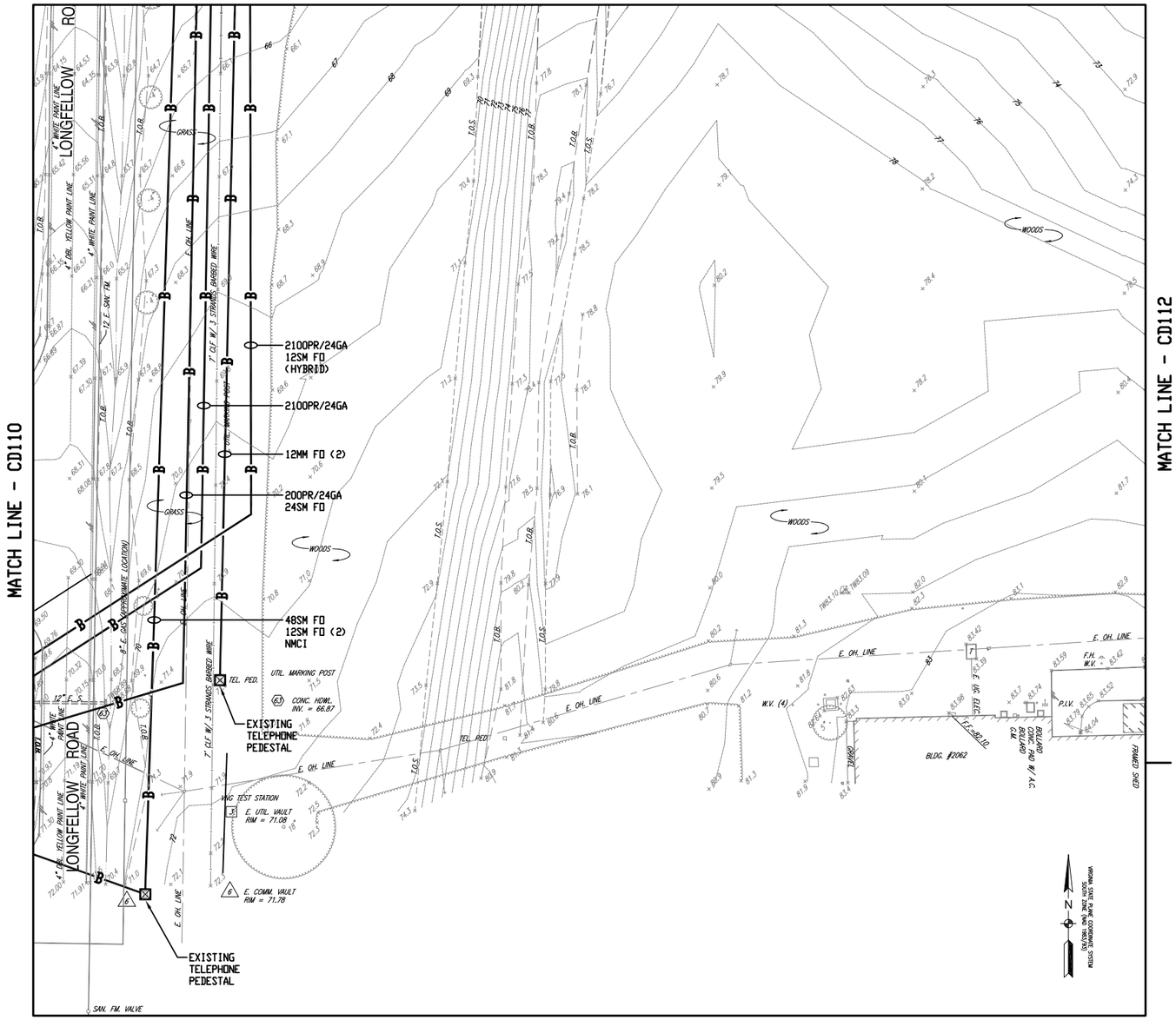

LEGEND:

MANHOLE/HAND HOLE/PEDESTAL ⊠

BURIED CABLE —B—

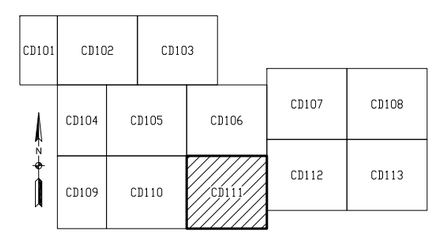

KEY PLAN
NAVAL WEAPONS STATION YORKTOWN
YORKTOWN, VIRGINIA
N. T. S.

CABLE ROUTING LAYOUT - CD111
NAVAL WEAPONS STATION YORKTOWN
YORKTOWN, VIRGINIA

N. T. S.

DISTRIBUTION AUTHORIZED TO U. S. GOVERNMENT AGENCIES AND THEIR CONTRACTORS FOR ADMINISTRATIVE OR OPERATIONAL USE. DATE OF DETERMINATION: DD MMMM 2012. OTHER REQUESTS FOR THIS DOCUMENT SHALL BE REFERRED TO SPACE AND NAVAL WARFARE SYSTEMS COMMAND ATLANTIC, DET NORFOLK, CODE 55360.

INSTALLATION DESIGN PLAN (IDP)

SIZE	CAGE CODE	AS-BUILT ID	IA	DRAWING NO.	REV
F	28687	000000	A	160-000-YORKTOWN	-

SCALE: NONE SHEET 14 OF 16

CABLE ROUTING LAYOUT - CD112
NAVAL WEAPONS STATION YORKTOWN
YORKTOWN, VIRGINIA

N. T. S.

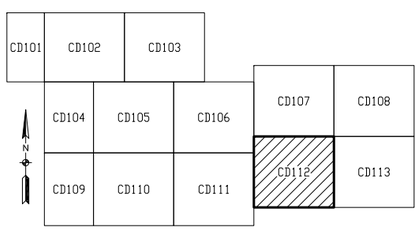

KEY PLAN
NAVAL WEAPONS STATION YORKTOWN
YORKTOWN, VIRGINIA

N. T. S.

DISTRIBUTION AUTHORIZED TO U.S. GOVERNMENT AGENCIES AND THEIR CONTRACTORS FOR ADMINISTRATIVE OR OPERATIONAL USE. DATE OF DETERMINATION: DD MMMM 2012. OTHER REQUESTS FOR THIS DOCUMENT SHALL BE REFERRED TO SPACE AND NAVAL WARFARE SYSTEMS COMMAND ATLANTIC, DET NORFOLK, CODE 55360.

INSTALLATION DESIGN PLAN (IDP)

SIZE	CAGE CODE	AS-BUILT ID	IA	DRAWING NO.	REV
F	28687	000000	A	160-000-YORKTOWN	-

SCALE: NONE | SHEET 15 OF 16

MATCH LINE - CD108

MATCH LINE - CD112

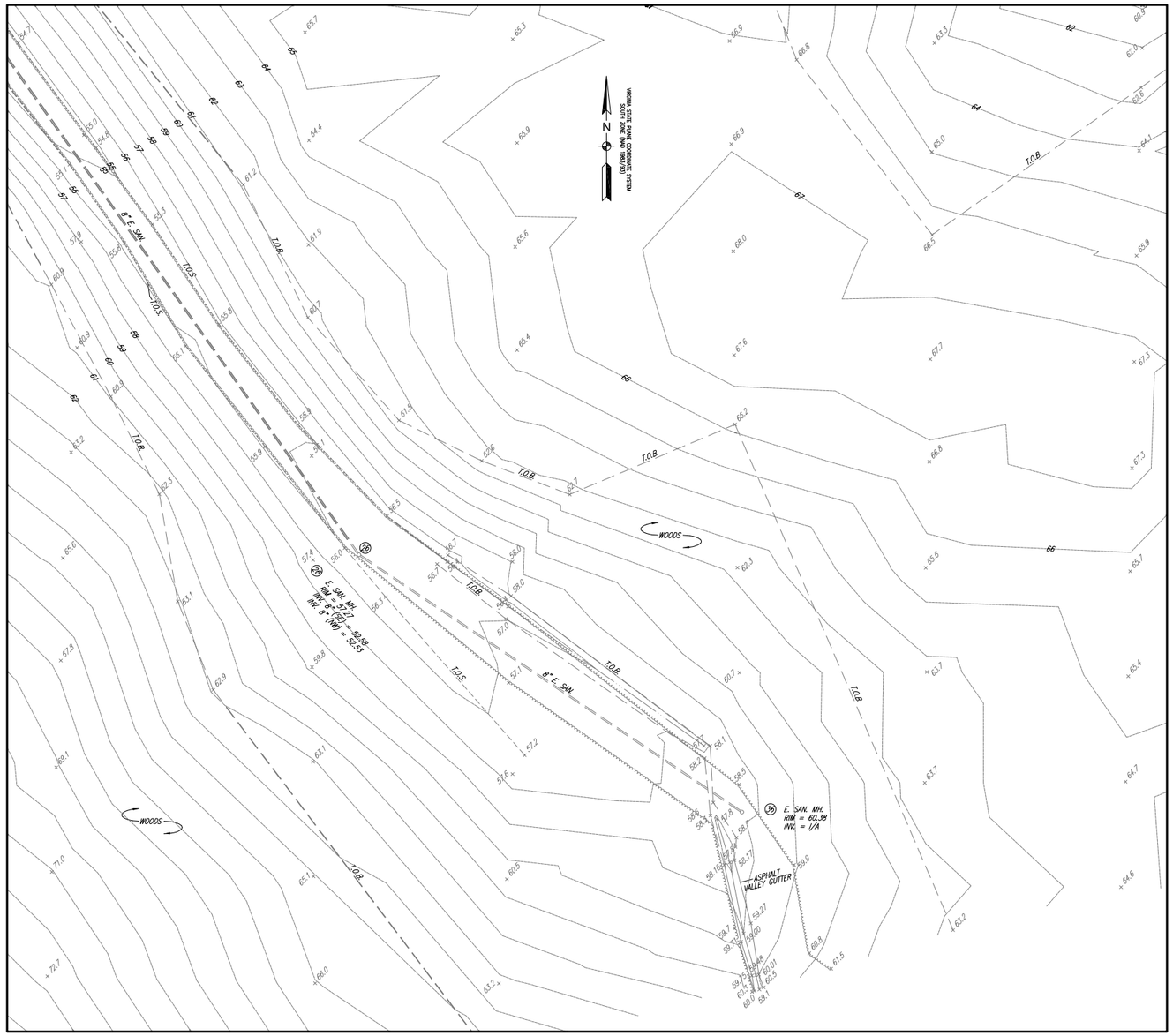

CABLE ROUTING LAYOUT - CD113
NAVAL WEAPONS STATION YORKTOWN
YORKTOWN, VIRGINIA

N. T. S.

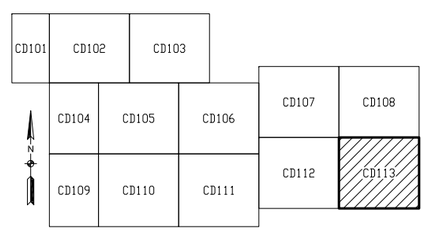

KEY PLAN
NAVAL WEAPONS STATION YORKTOWN
YORKTOWN, VIRGINIA

N. T. S.

DISTRIBUTION AUTHORIZED TO U.S. GOVERNMENT AGENCIES AND THEIR CONTRACTORS FOR ADMINISTRATIVE OR OPERATIONAL USE. DATE OF DETERMINATION: DD MMMM 2012. OTHER REQUESTS FOR THIS DOCUMENT SHALL BE REFERRED TO SPACE AND NAVAL WARFARE SYSTEMS COMMAND ATLANTIC, DET NORFOLK, CODE 55360.

INSTALLATION DESIGN PLAN (IDP)

SIZE	CAGE CODE	AS-BUILT ID	IA	DRAWING NO.	REV
F	28687	000000	A	160-000-YORKTOWN	-
SCALE: NONE					SHEET 16 OF 16