ABBREVIATIONS

A	AMPS, AMPERE
AC	ALTERNATING CURRENT
AF	AMP FRAME, AMP FUSE
AFF	ABOVE FINISHED FLOOR
AL	ALUMININUM
ALT	ALTERNATE
AM	AMMETER
AMPS	AMPERES
APPROX	APPROXIMATELY
ASTM	AMERICAN SOCIETY OF TESTING AND MATERIALS
AT	AMP TRIP
ATS	AUTOMATIC TRANSFER SWITCH
AUX	AUXILIARY
AWG	AMERICAN WIRE GAUGE
&	AND
@	AT
BATT	BATTERY
BIL	BASIC IMPULSE LEVEL
B., BLDG	BUILDING
BEQ	BACHELOR ENLISTED QUARTERS
BKR	BREAKER
BNC	BAYONET-NEILL-CONCELMAN
BOT	BOTTOM
C	CONDUIT, CONDUCTOR
CAB	CABINET
CAFE	CLEAN AGENT FIRE EXTINGUISHER
CAT	CATALOG
CATV	CABLE TELEVISION
CB	CIRCUIT BREAKER, CATCH BASIN
CEM	CEMENT
CF	CUBIC FOOT
CIP	CAST IN PLACE
CKT	CIRCUIT
CL	CLASS, CENTERLINE, CURRENT LIMITING
CLG	CEILING
CLR	CLEAR
COL	COLUMN
CMH	COMMUNICATIONS MANHOLE
COMM	COMMUNICATIONS
CONC	CONCRETE
COND	CONDUIT
CONN	CONNECTION
CONST	CONSTRUCTION
CONT	CONTINUED
CONTR	CONTRACTOR
COORD	COORDINATE
CPT	CONTROL POWER TRANSFORMER
CR	CONTROL RELAY
CTRL	CONTROL
CU	COPPER
DB	DIRECT BURIED
dB	DECIBELS
DC	DIRECT CURRENT
DED	DEDICATED
DEG	DEGREES
DET	DETAIL
DIA	DIAMETER
DIV	DIVISION
DIM	DIMENSIONS
DWG	DRAWING
EA	EACH
ELEC	ELECTRIC
EL	ELEVATION
EMT	ELECTRICAL METAL TUBING
ENCL	ENCLOSURE
EPA	EFFECTIVE PROJECTED AREA
EPR	ETHYLENE PROPYLENE RUBBER
EQ	EQUAL
EQUIP	EQUIPMENT
ESS	ELECTRONIC SECURITY SYSTEM
EXIST	EXISTING
EXP	EXPOSED
EXT	EXTERIOR
F	FARENHEIT
FA	FIRE ALARM
FAA	FUTURE FORCED AIR, FIRE ALARM ANNUNCIATOR
FACP	FIRE ALARM CONTROL PANEL
FACS	FIRE ALARM CONTROL SYSTEM
FC	FOOT CANDLE
FND	FOUNDATION
FDR	FEEDER
FHP	FRACTIONAL HORSEPOWER
FIXT	FIXTURE
FLR	FLOOR
FLUOR	FLUORESCENT
FMC	FLEXIBLE METAL CONDUIT
FO	FIBER OPTIC
FT	FOOT, FEET
FTG	FOOTING
FU	FUSE

ABBREVIATIONS CONT. . .

FV	FULL VOLTAGE
FVR	FULL VOLTAGE REVERSING
FVNR	FULL VOLTAGE NON REVERSING
GA	GAUGE
GALV	GALVANIZED
GEN	GENERATOR
GFI	GROUND FAULT INTERRUPTER
GFCI	GROUND FAULT CURRENT INTERRUPTER
GFGI	GOVERNMENT FURNISHED GOVERNMENT INSTALLED
GND	GROUND
GRS	GALVANIZED RIGID STEEL
GSC	GROUND SERVICE CONDUCTOR
H	HEIGHT
HD	HEAVY DUTY
HDD	HORIZONTAL DIRECTIONAL DRILL
HDPE	HIGH DENSITY POLYETHYLENE
HH	HAND HOLE
HID	HIGH INTENSITY DISCHARGE
HOA	HAND OFF AUTOMATIC
HORIZ	HORIZONTAL
HP	HORSEPOWER
HPS	HIGH PRESSURE SODIUM
HR	HOUR
HZ	HERTZ
ID	INSIDE DIMENSION
IEEE	INSTITUTE OF ELECTRICAL AND ELECTRONIC ENGINEERS
IES	ILLUMINATING ENGINEERING SOCIETY
IN	INCH(ES)
INCL	INCLUDING
INST	INSTANTANEOUS
IMH	INSTRUMENTATION MANHOLE
IR	INFRARED
J, JB	JUNCTION BOX
JCT	JUNCTION
KA	KILO AMPERES
KAIC	KILO AMPS INTERRUPTING CAPACITY
KCMIL	ONE THOUSAND CIRCULAR MILS
KV	KILOVOLTS
KVA	KILOVOLT AMPERES
KVAR	KILOVOLT AMPERES REACTIVE
KW	KILOWATTS
KWH	KILOWATT HOURS
KWHD	KILOWATT HOURS DEMAND
L	LENGTH
LB	POUND
LBS	POUNDS
LC	LOAD CENTER
LED	LIGHT EMITTING DIODE
LF	LINEAR FEET
LOC	LOCATIONS
LS	LIMIT SWITCH
LT	LIGHT
LTG	LIGHTING
LTS	LIGHTS
LV	LOW VOLTAGE
LVMH	LOW VOLTAGE MANHOLE
L-G	LINE TO GROUND
L-L	LINE TO LINE
M	MOTOR
MAX	MAXIMUM
MCM	ONE THOUSAND CIRCULAR MILS
MCOV	MAXIMUM CIRCUIT OPERATING VOLTAGE
MDF	MAIN DISTRIBUTION FRAME
MECH	MECHANICAL
MFR	MANUFACTURER
MH	MANHOLE
MIN	MINIMUM
MISC	MISCELLANEOUS
MOV	METAL OXIDE VARISTOR
MLO	MAIN LUGS ONLY
MTD	MOUNTED
MTR	MOTOR
MV	MEDIUM VOLTAGE
MVA	MEGAVOLT AMPERES
N	NEUTRAL
NC	NORMALLY CLOSED
NE	NORTH EAST
NEC	NATIONAL ELECTRIC CODE
NEMA	NATIONAL ELECTRICAL MANUFACTURERS ASSOCIATION
NEUT	NEUTRAL
NIC	NOT IN CONTRACT
NO	NORMALLY OPEN
NO	NUMBER
NFPA	NATIONAL FIRE PROTECTION ASSOCIATION
NPT	NOMINAL PIPE THREAD
NRTL	NATION RECOGNIZED TESTING LABORATORY
NTS	NOT TO SCALE
OD	OUTSIDE DIAMETER
OH	OVERHEAD
OL	OVERLOADS
OWS	OIL WATER SEPARATOR

ABBREVIATIONS CONT. . .

P	POLE
PB	PULL BOX, PUSH BUTTON
PF	POWER FACTOR
PH OR ϕ	PHASE
PLC	PROGRAMMABLE LOGIC CONTROLLER
PLCS	PLACES
PM	POWER METER
PMH	PRIMARY MANHOLE
PNL	PANEL
PR	PAIR
PROJ	PROJECT
PS	PRESSURE SENSOR
PSI	POUNDS PER SQUARE INCH
PT	POTENTIAL TRANSFORMER, PRESSURE TRANSMITTER
PTZ	POINT TILT ZOOM
PV	PHOTOVOLTAIC
PVC	POLYVINYL CHLORIDE
PWR	POWER
%	PERCENT
QTY	QUANTITY
REC	RECEPTACLE
REV	REVISION, REVISED
RF	RATING FACTOR, RADIO FREQUENCY
RGS	RIGID GALVANIZED STEEL
RVAT	REDUCED VOLTAGE AUTO TRANSFORMER
RVNR	REDUCED VOLTAGE NON REVERSING
R/W	RIGHT OF WAY
Rx	RECEIVE
SA	SURGE ARRESTOR
SCH	SCHEDULE
SEC	SECONDARY, SECOND(S)
SECT	SECTION
SHT	SHEET
SI	SQUARE INCH
SM	SINGLE MODE
SMH	SECONDARY MANHOLE
SPD	SURGE PROTECTIVE DEVICE
SPDT	SINGLE PULL DOUBLE THROW
SPEC	SPECIFICATION(S)
SQ	SQUARE
SS	STAINLESS STEEL
ST	STREET
STA	STATION
STD	STANDARD
STP	SHIELDED TWISTED PAIR
STR	STRANDED
SW	SWITCH
SWBD	SWITCHBOARD
SYM	SYMMETRICAL
SYNC	SYNCHRONOUS
SY	SQUARE YARD(S)
SYS	SYSTEM
TB	TERMINAL BLOCK
TBD	TO BE DETERMINED
TD	TIME DELAY
TELE	TELEPHONE
TEMP	TEMPERATURE
TERM	TERMINAL
THHN	HEAT RESISTANT THERMOPLASTIC INSULATION
THK	THICK
THWN INSULATION	HEAT AND MOISTURE RESISTANT THERMOPLASTIC
THRU	THROUGH
TYP	TYPICAL
TWSH	TWISTED SHIELDED
Tx	TRANSMIT
UBC	UNIFORM BUILDING CODE
UG	UNDERGROUND
UL	UNDERWRITERS LABORATORY
UON	UNLESS OTHERWISE NOTED
UPS	UNITERRUPTABLE POWER SUPPLY
UTP	UNSHIELDED TWISTED PAIR
V	VOLTS, VOLTAGE
VAR	VOLT AMPERES REACTIVE
VERT	VERTICAL
VFI	VACUUM FAULT INTERRUPTER
W	WATT, WIDE, WIDTH, WIRE
WH	WATTHOUR
W/O	WITHOUT
WP	WEATHERPROOF
WT	WEIGHT
WWF	WELDED WIRE FABRIC
W/	WITH
X	REACTANCE
XFMR	TRANSFORMER
XHHW	HEAT AND MOISTURE RESISTANT SYNTHETIC POLYMER
XP	EXPLOSION PROOF
Z	IMPEDANCE

*NOTE: NOT ALL ABBREVIATIONS LISTED ARE USED IN THIS SUBMITTAL

ELECTRICAL GUIDE LEGEND - EXTERIOR:

- UNDERGROUND DUCTBANK, CONCRETE ENCASED UON. DESCRIPTION AS INDICATED.
- EXISTING UNDERGROUND DUCTBANK, CONCRETE ENCASED UON. DESCRIPTION AS INDICATED.

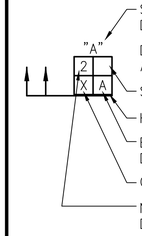

- SYMBOL REFERS TO SPECIFIC DUCTBANK SECTION DETAIL.
- DUCTBANK SECTION LOOKING IN DIRECTION OF ARROWS.
- SPARE DUCT (TYPICAL).
- HEAVY LINE INDICATES BOTTOM OF DUCT.
- EXISTING CABLE DESIGNATION (TYPICAL) DESCRIPTION PER CABLE SCHEDULE, SHEET ES601.
- OCCUPIED DUCT, UNIDENTIFIED CABLE.
- NEW CABLE DESIGNATION (TYPICAL) DESCRIPTION PER CABLE SCHEDULE.
- UP — UNDERGROUND CONDUIT, CONCRETE ENCASED UON.
- US(E) — EXISTING UNDERGROUND CONDUIT, CONCRETE ENCASED, UON.
- UL — REMOVE UNDERGROUND CONDUIT, CONCRETE ENCASED, UON.
- TYPICAL DESIGNATIONS TO BE USED IN CONJUNCTION WITH UNDERGROUND CONDUIT SYMBOLS:
  - UP = UNDERGROUND PRIMARY
  - US = UNDERGROUND SECONDARY
  - USL= UNDERGROUND SITE LIGHTING
  - UL = UNDERGROUND AREA LIGHTING
  - UC = UNDERGROUND COMMUNICATIONS
- 13.2 — OVERHEAD ELECTRICAL
- S(D) — REMOVE OVERHEAD ELECTRICAL, UON.
- S(E) — EXISTING OVERHEAD ELECTRICAL
- S(R) — EXISTING OVERHEAD ELECTRICAL, TO BE RELOCATED
- SL — REMOVE OVERHEAD ELECTRICAL
- TYPICAL DESIGNATIONS TO BE USED IN CONJUNCTION WITH OVERHEAD CONDUIT SYMBOLS:
  - 13.2-477AAC = OVERHEAD PRIMARY (ALL ALUMINUM CONDUCTORS)
  - 13.2-#4 CU = OVERHEAD PRIMARY (COPPER CONDUCTORS)
  - 13.2 = OVERHEAD PRIMARY
  - S = OVERHEAD SECONDARY
  - SL = OVERHEAD SITE LIGHTING
- MANHOLE OR HANDHOLE AS INDICATED
- EXISTING MANHOLE OR HANDHOLE AS INDICATED.
- INDICATES FRONT. PAD MOUNTED TRANSFORMER.
- INDICATES FRONT. EXISTING PAD MOUNTED TRANSFORMER.
- NEW PAD MOUNTED SWITCH
- EXISTING PAD MOUNTED SWITCH
- AREA/STREET LIGHTING POLE WITH LUMINAIRE.
- EXISTING AREA/STREET LIGHTING POLE WITH LUMINAIRE.
- EXISTING AREA/STREET LIGHTING POLE WITH EXISTING LUMINAIRE.
- (N) NEW POWER POLE (HEIGHT AND CLASS AS INDICATED).
- (E) EXISTING POWER POLE TO REMAIN.
- (D) REMOVE EXISTING POWER POLE (HEIGHT AND CLASS AS INDICATED).
- A AREA/STREET LIGHTING FIXTURE TYPE. SEE LIGHTING FIXTURE SCHEDULE ON SHEEET ES602.
- HOMERUNS TO PANEL. PANEL & CIRCUIT DESIGNATIONS AS INDICATED.

ELECTRICAL GUIDE LEGEND - EXTERIOR (CONT'D):

- 2 — DOWN GUY AND ANCHOR – QUANTITY AS INDICATED IF OTHER THAN ONE.
- EXISTING DOWN GUY AND ANCHOR – PROVIDE ADDITIONAL DOWN GUY TO EXISTING ANCHOR.
- 2 — EXISTING DOWN GUY AND ANCHOR – QUANTITY AS INDICATED IF OTHER THAN ONE.
- 2 — REMOVE DOWN GUY AND ANCHOR – QUANTITY AS INDICATED IF OTHER THAN ONE.
- 2 — SPAN GUY – QUANTITY AS INDICATED IF OTHER THAN ONE.
- 2 — EXISTING SPAN GUY – QUANTITY AS INDICATED IF OTHER THAN ONE.
- 2 — REMOVE EXISTING SPAN GUY AND ANCHOR – QUANTITY AS INDICATED IF OTHER THAN ONE.
- 25 — NEW POLE MOUNTED TRANSFORMER – SINGLE PHASE WITH KVA AS INDICATED.
- 25 — EXISTING POLE MOUNTED TRANSFORMER – SINGLE PHASE WITH KVA AS INDICATED.
- 25 — REMOVE EXISTING POLE MOUNTED TRANSFORMER – KVA AS INDICATED.
- SAG NUMBER; REFER TO SHEET ES602 FOR ADDITIONAL INFORMATION.

SINGLE LINE LEGEND:

- POWER TRANSFORMER.
- PT — POTENTIAL TRANSFORMER.
- CPT — CONTROL POTENTIAL TRANSFORMER.
- SURGE ARRESTER.
- FUSED SWITCH.
- DISCONNECT SWITCH.
- MOLDED CASE CIRCUIT BREAKER.
- LOW VOLTAGE DRAW-OUT POWER CIRCUIT BREAKER.
- FUSED LOW VOLTAGE DRAW-OUT POWER CIRCUIT BREAKER.
- MEDIUM VOLTAGE POWER CIRCUIT BREAKER.
- MEDIUM VOLTAGE POWER DRAW-OUT CIRCUIT BREAKER.
- DELTA CONNECTION
- GROUNDED WYE CONNECTION.
- 600/5 — CURRENT TRANSFORMER – SINGLE RATIO AS SHOWN
- 600/5 — CURRENT TRANSFORMER –MULT RATIO AS SHOWN (FULL RATIO SHOWN)
- MEDIUM VOLTAGE CABLE TERMINATION
- EXISTING MEDIUM VOLTAGE CABLE TERMINATION
- REMOVE EXISTING MEDIUM VOLTAGE CABLE TERMINATION
- CAPACITOR
- GROUNDING ELECTRODE CONNECTION
- CABLE OR BUS, TYPE AND CHARACTERISTICS AS INDICATED.
- EXISTING CABLE OR BUS, TYPE AND CHARACTERISTICS AS INDICATED.
- REMOVE CABLE OR BUS, TYPE AND CHARACTERISTICS AS INDICATED.

GENERAL LEGEND:

- # — DEMOLITION NOTE TAG
- # — NEW WORK NOTE TAG

SYM	DESCRIPTION	DATE	APPR

NAVFAC

COMMONWEALTH OF VIRGINIA
JAMES WALTER PREFERKORN JR.
Lic. No.018432
10 JUNE 2014
PROFESSIONAL ENGINEER
SEAL

ADVANCED ENGINEERING CONSULTANTS
Electrical - Mechanical - Plumbing - Fire Protection
249 CENTRAL PARK AVE
SUITE 330
VIRGINIA BEACH, VA 23462

Phone: 757.502.8882
Fax: 614.486.4082

A/E INFO

APPROVED: for Rd White 6/13/14
FOR COMMANDER NAVFAC / B.L.T.L.

ACTIVITY

SATISFACTORY TO DATE

DES	KC	DRW JPW	CHK JWP
PM	XXX		
BRANCH MANAGER	KDL ~~XXX~~		
CHIEF ENG/ARCH	TLO XXX		
FIRE PROTECTION	LRP XXX		

DEPARTMENT OF THE NAVY
NAVAL FACILITIES ENGINEERING COMMAND
HAMPTON ROADS DIV.

NAVAL FACILITIES ENGINEERING COMMAND ~ MID-ATLANTIC
NAVAL STATION - NORFOLK, VIRGINIA

NAVAL WEAPONS STATION YORKTOWN, VIRGINIA

P-984 REGIMENTAL HEADQUARTERS

GENERAL INFORMATION – ELECTRICAL SITE

SCALE:	AS NOTED
EPROJECT NO.:	1113910
CONSTR. CONTR. NO.	N40085-13-C-4507
NAVFAC DRAWING NO.	12664833
SHEET	OF

ES000

DRAWFORM REVISION: 7 AUGUST 2009

FILE NAME: C:\Users\AEC47\appdata\local\temp\AcPublish_30892\113910X-ES000 General Information.dwg LAYOUT NAME: Layout1 PLOTTED: Monday, June 09, 2014 - 2:27pm USER: AEC47

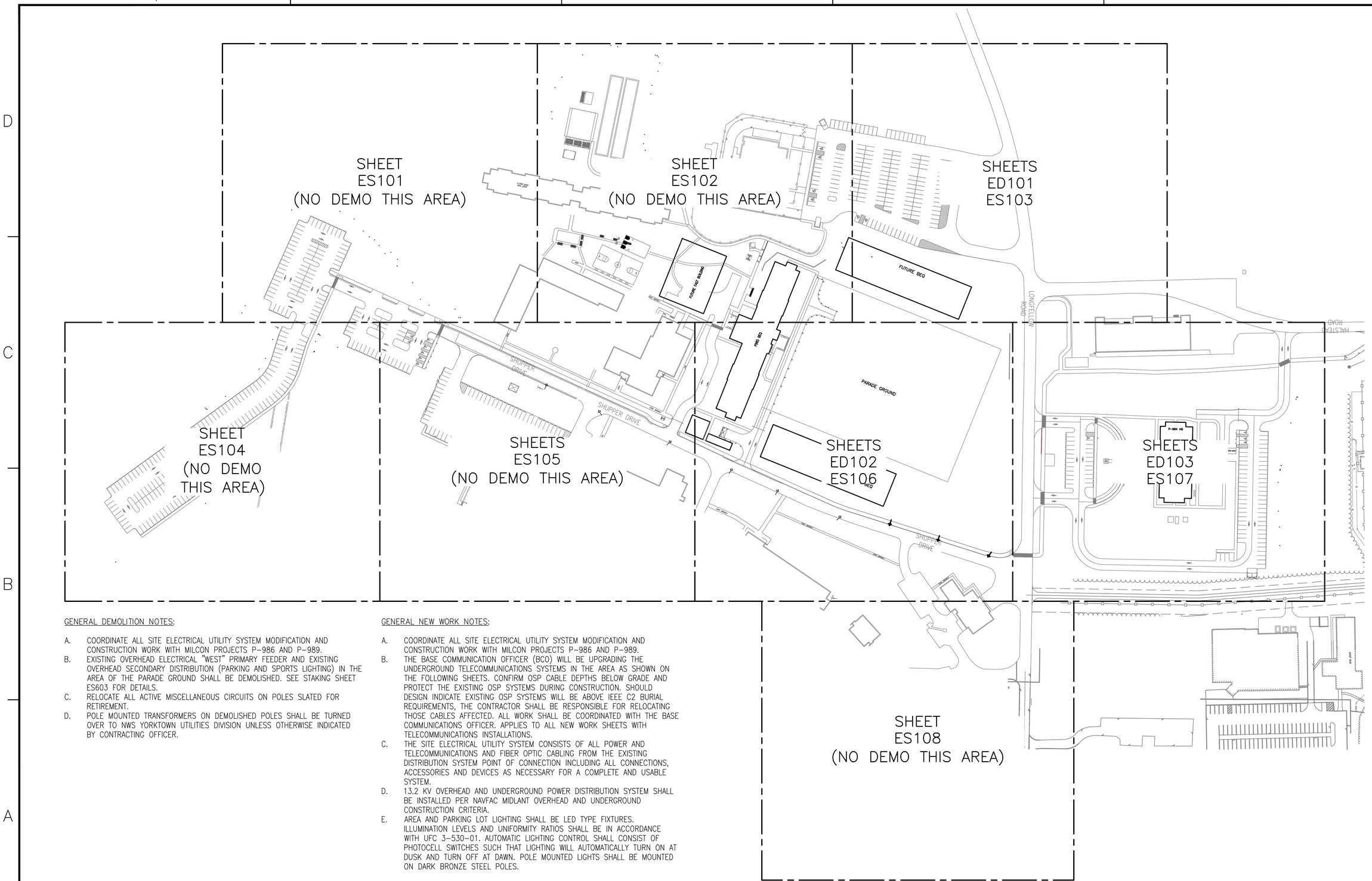

GENERAL DEMOLITION NOTES:

A. COORDINATE ALL SITE ELECTRICAL UTILITY SYSTEM MODIFICATION AND CONSTRUCTION WORK WITH MILCON PROJECTS P-986 AND P-989.
B. EXISTING OVERHEAD ELECTRICAL "WEST" PRIMARY FEEDER AND EXISTING OVERHEAD SECONDARY DISTRIBUTION (PARKING AND SPORTS LIGHTING) IN THE AREA OF THE PARADE GROUND SHALL BE DEMOLISHED. SEE STAKING SHEET ES603 FOR DETAILS.
C. RELOCATE ALL ACTIVE MISCELLANEOUS CIRCUITS ON POLES SLATED FOR RETIREMENT.
D. POLE MOUNTED TRANSFORMERS ON DEMOLISHED POLES SHALL BE TURNED OVER TO NWS YORKTOWN UTILITIES DIVISION UNLESS OTHERWISE INDICATED BY CONTRACTING OFFICER.

GENERAL NEW WORK NOTES:

A. COORDINATE ALL SITE ELECTRICAL UTILITY SYSTEM MODIFICATION AND CONSTRUCTION WORK WITH MILCON PROJECTS P-986 AND P-989.
B. THE BASE COMMUNICATION OFFICER (BCO) WILL BE UPGRADING THE UNDERGROUND TELECOMMUNICATIONS SYSTEMS IN THE AREA AS SHOWN ON THE FOLLOWING SHEETS. CONFIRM OSP CABLE DEPTHS BELOW GRADE AND PROTECT THE EXISTING OSP SYSTEMS DURING CONSTRUCTION. SHOULD DESIGN INDICATE EXISTING OSP SYSTEMS WILL BE ABOVE IEEE C2 BURIAL REQUIREMENTS, THE CONTRACTOR SHALL BE RESPONSIBLE FOR RELOCATING THOSE CABLES AFFECTED. ALL WORK SHALL BE COORDINATED WITH THE BASE COMMUNICATIONS OFFICER. APPLIES TO ALL NEW WORK SHEETS WITH TELECOMMUNICATIONS INSTALLATIONS.
C. THE SITE ELECTRICAL UTILITY SYSTEM CONSISTS OF ALL POWER AND TELECOMMUNICATIONS AND FIBER OPTIC CABLING FROM THE EXISTING DISTRIBUTION SYSTEM POINT OF CONNECTION INCLUDING ALL CONNECTIONS, ACCESSORIES AND DEVICES AS NECESSARY FOR A COMPLETE AND USABLE SYSTEM.
D. 13.2 KV OVERHEAD AND UNDERGROUND POWER DISTRIBUTION SYSTEM SHALL BE INSTALLED PER NAVFAC MIDLANT OVERHEAD AND UNDERGROUND CONSTRUCTION CRITERIA.
E. AREA AND PARKING LOT LIGHTING SHALL BE LED TYPE FIXTURES. ILLUMINATION LEVELS AND UNIFORMITY RATIOS SHALL BE IN ACCORDANCE WITH UFC 3-530-01. AUTOMATIC LIGHTING CONTROL SHALL CONSIST OF PHOTOCELL SWITCHES SUCH THAT LIGHTING WILL AUTOMATICALLY TURN ON AT DUSK AND TURN OFF AT DAWN. POLE MOUNTED LIGHTS SHALL BE MOUNTED ON DARK BRONZE STEEL POLES.

PLAN NORTH

OVERALL SITE PLAN - ELECTRICAL

NTS

SYM	DESCRIPTION	DATE	APPR

NAVFAC

COMMONWEALTH OF VIRGINIA
JAMES WALTER PFEFFERKORN JR.
Lic. No.018432
10 JUNE 2014
PROFESSIONAL ENGINEER
SEAL

ADVANCED ENGINEERING CONSULTANTS
Electrical - Mechanical - Plumbing - Fire Protection
249 CENTRAL PARK AVE
SUITE 330
VIRGINIA BEACH, VA 23462
Phone: 757.502.8882
Fax: 614.486.4082
A/E INFO

APPROVED
FOR COMMANDER NAVFAC / B.L.T.L.
ACTIVITY
SATISFACTORY TO DATE

DES	KC	DRW JPW	CHK JWP
PM	XXX		
BRANCH MANAGER	KDL ~~XXX~~		
CHIEF ENG/ARCH	TLO XXX		
FIRE PROTECTION	LRP XXX		

DEPARTMENT OF THE NAVY
NAVAL FACILITIES ENGINEERING COMMAND
HAMPTON ROADS IPT
NAVAL FACILITIES ENGINEERING COMMAND ~ MID-ATLANTIC
NAVAL STATION – NORFOLK, VIRGINIA
NAVAL WEAPONS STATION YORKTOWN, VIRGINIA
P-984 REGIMENTAL HEADQUARTERS
OVERALL SITE PLAN – ELECTRICAL

SCALE: AS NOTED
EPROJECT NO.: 1113910
CONSTR. CONTR. NO. N40085-13-C-4507
NAVFAC DRAWING NO. 12664834
SHEET 89 OF
ES001

DRAWFORM REVISION: 7 AUGUST 2009

FILE NAME: V:\2013 proj\13-230-01 P984 DB HQ AND P985 DB BEQ\CAD\CAD Sheets - P984 Headquarters\1113910X-ES001 Overall Site Plan.dwg LAYOUT NAME: Work PLOTTED: Monday, June 09, 2014 - 2:28pm USER: AEC47

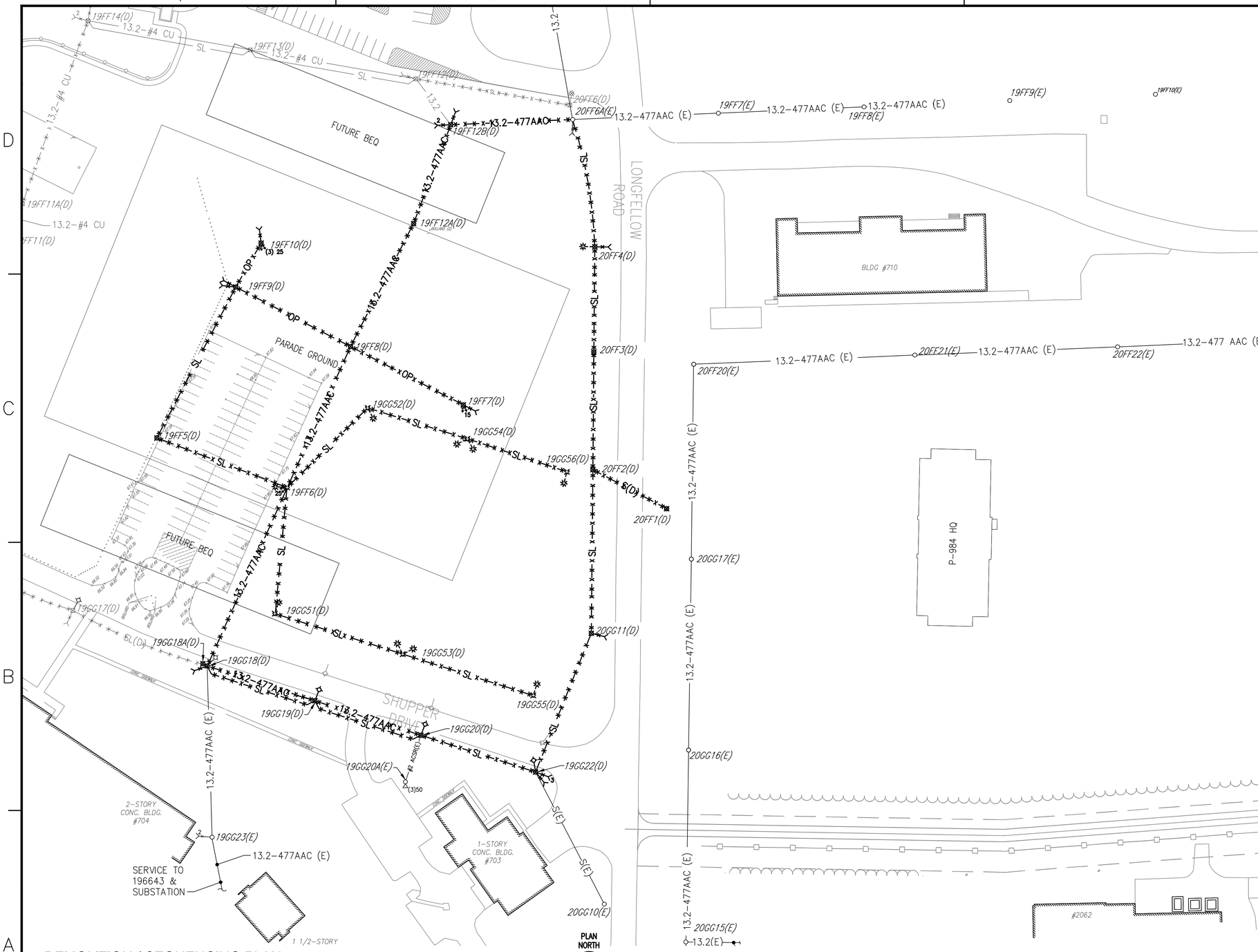

DEMOLITION / SEQUENCING PLAN

1" = 50'-0"

SHEET KEYED NOTES

GENERAL NOTES:

A. SEE SHEET ES001 FOR GENERAL NOTES AND LEGEND.
B. SEE STAKING SHEET, ES602, FOR INFORMATION ON OVERHEAD PRIMARY LINES TO BE RETIRED.
C. SEE SHEET ES003 FOR DEMOLITION / SEQUENCING PLAN SCHEDULE.

KEYPLAN

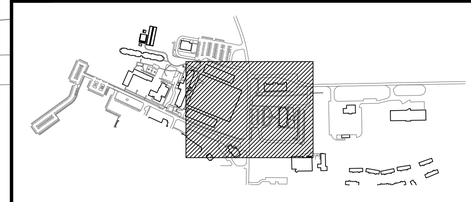

GRAPHIC SCALE

1"=50' 0' 50' 100' 150' 200' 250'

SYM	DESCRIPTION	DATE	APPR

NAVFAC

COMMONWEALTH OF VIRGINIA
JAMES WALTER PFEFFERKORN JR.
Lic. No.018432
10 JUNE 2014
PROFESSIONAL ENGINEER
SEAL

ADVANCED ENGINEERING CONSULTANTS
Electrical - Mechanical - Plumbing - Fire Protection
249 CENTRAL PARK AVE
SUITE 330
VIRGINIA BEACH, VA 23462
Phone: 757.502.8882
Fax: 614.486.4082
A/E INFO

APPROVED
FOR COMMANDER NAVFAC / B.L.T.L.
ACTIVITY
SATISFACTORY TO DATE

DES	KC	DRW JPW	CHK JWP
PM	XXX		
BRANCH MANAGER	KDL ~~XXX~~		
CHIEF ENG/ARCH	TLO XXX		
FIRE PROTECTION	LRP XXX		

DEPARTMENT OF THE NAVY
NAVAL FACILITIES ENGINEERING COMMAND
HAMPTON ROADS IPT
NAVAL FACILITIES ENGINEERING COMMAND ~ MID-ATLANTIC
NAVAL STATION - NORFOLK, VIRGINIA
NAVAL WEAPONS STATION YORKTOWN, VIRGINIA
P-984 REGIMENTAL HEADQUARTERS
DEMOLITION / SEQUENCING PLAN

SCALE:	AS NOTED
EPROJECT NO.:	1113910
CONSTR. CONTR. NO.	N40085-13-C-4507
NAVFAC DRAWING NO.	12664835
SHEET	OF

ES002

DRAWFORM REVISION: 7 AUGUST 2009

FILE NAME: V:\2013 proj\13-235-01 P984 DB HQ AND P985 DB BEQ\CAD\CAD Sheets - P984 Headquarters\1113910X-ES002 Demolition Sequencing Plan.dwg LAYOUT NAME: Layout1 PLOTTED: Monday, June 09, 2014 - 2:28pm USER: AEC47

DEMOLITION / SEQUENCING PLAN SCHEDULE

TASK NUMBER	OUTAGE NUMBER	DE-ENERGIZE POINT	POLES IMPACTED	UG LINES IMPACTED	FACILITIES IMPACTED	DURATION ANTICIPATED	TASK TO ACCOMPLISH: MEDIUM VOLTAGE	TASK TO ACCOMPLISH: LOW VOLTAGE	COMMENTS / ADDITIONAL NOTES
1	1	WEST FEEDER; OS-105	19FF14, TEMP POLE #01, TEMP POLE #02	UG BETWEEN 19FF14 AND T7(E)	BRIEFLY OPEN OS-105 AND CUT POWER TO ALL FACILITIES SERVED BY THE WEST FEEDER. OPEN CUTOUTS ON 19FF12B TO ISOLATE POLES 19FF12, 19FF13, 19FF14, 19FF11 AND 19FF11A, THEN RE-ENERGIZE OS-105. PERFORM OUTAGE TASKS, DE-ENERGIZE OS-105, CLOSE CUTOUTS ON POLE 19FF12B, AND RE-ENERGIZE OS-105	12-14 HOURS	A. EXTEND 15 KV OH CIRCUIT FROM 19FF14 TO TEMPORARY POLES #01 AND #02. TEMPORARY POLE #01 SHALL BE 40-FT CLASS 3 POLE AND POLE #02 SHALL BE A 45 FOOT CLASS 3 POLE. POLE #02 SHALL BE A TERMINAL POLE WITH AN UG FEEDER EXTENDING INTO THE T7(E) ELECTRICAL MANHOLE SERVING BUILDINGS 1808 AND 2075. DURING THE OUTAGE, THE EXISTING OVERHEAD FEEDER FROM 19FF14 TO 19FF11A SHALL BE REMOVED. ALSO THE FEEDER FROM 19FF14 SHALL BE REMOVED FROM MH7(E) AND THE TEMPORARY FEEDER FROM POLE #02 SHALL BE LANDED ON EXISTING TRANSFORMER T7(E). B. FROM TEMPORARY POLE #01 EXTEND A SPUR TO TEMPORARY POLE #03 IN THE VICINITY OF BUILDING 1808. TEMPORARY POLE #03 SHALL BE A 45-FOOT CLASS 3 POLE AND SHALL BE A TERMINAL POLE. DURING THE OUTAGE, THE EXISTING DUCTBANK TO BUILDING 1808 SHALL BE INTERCEPTED, THE FEEDER BACKED OUT, AND A TEMPORARY FEEDER FROM POLE #03 SHALL BE LANDED ON TRANSFORMER T3(E).	NONE.	FOLLOWING SUCCESSFUL COMPLETION OF OUTAGE 1, POLES 19FF11 AND 19FF11A SHALL BE DEMOLISHED AND PREPARATIONS FOR CONSTRUCTION ON P-985 MAY COMMENCE.
2							INSTALL DUCTBANKS FOR THE P-985 FACILITY, COMPLETE WITH ALL SWITCHES AND MANHOLES. THIS INCLUDES DUCTBANK FROM POWER POLE 19FF3 TO MH3, MH3 TO SW2 AND MH4, MH4 TO T2, T3(E) AND MH5, T2 TO P-985, MH5 TO SW3 AND MH6, AND MH6 TO MH7(E).	NONE.	BASED ON THE DENSITY OF UNDERGROUND UTILITIES AT THE NORTHWEST QUADRANT OF P-985, ALL ATTEMPTS TO EXPEDITE INSTALLATION OF THE REQUIRED MANHOLES, AND PARTICULARLY MANHOLE 4, WILL BE MADE.
3							DEMOLISH POLES (AND THEIR APPURTENANCES) 20FF4, 20FF3, 20FF2, 20GG11, 19GG19, 19GG17, 19GG16 AND 19FF3. LEAVE THE LENGTHS OF WIRE IN PLACE FOR REUSE FOR THE LIGHTING CIRCUIT BETWEEN 19FF1, 19FF2 AND 19FF3.	THERE IS NO REQUIREMENT FOR MAINTENANCE OF EXISTING STREET LIGHTING DURING DEMOLITION; NO TEMPORARY LIGHTING SHALL BE PROVIDED.	
4							INSTALL REPLACEMENT POLES FOR 20FF4, 20FF2, 20GG11, 19GG22, 19GG20, 19GG19, 19GG17, 19GG16 AND 19FF3.	NONE.	
5	2	WEST FEEDER; OS-105	20FF66, 20FF6, 19GG18A, 19FF3		ALL FACILITIES SERVED BY THE WEST FEEDER	12-14 HOURS	UPON COMPLETION OF TASKS 2 AND 3, CONDUCT OUTAGE FOR ENERGIZATION OF WEST FEEDER. THIS WORK SHALL INCLUDE THE REPLACEMENT OF POLE 19GG18A, THE SPLICING OF FEEDERS AT 20FF6A, 19GG18A AND 19FF3, GUYING POLES AT 20FF6A, 20GG11, 19GG22, 19GG18(N) AND 19GG18A, EXTENSION OF CIRCUITS FROM 19GG23 TO 19GG18A(N) AND FROM 19GG20A TO 19GG20(N), REMOVAL OF POLE 20FF6, TERMINATION OF THE FEEDER FROM 19FF3 TO SW2, BACKING THE TEMPORARY FEEDERS OUT OF POSITION AT T3(E) AND T7(E), AND INSTALLATION OF THE PERMANENT FEEDERS INTO THE DUCTBANK/MANHOLE SYSTEM SERVING THESE EXISTING FACILITIES. DISCONNECT PRIMARY FROM POLES 19FF6, 29FF7, 19FF9 19FF12A, AND TRANSFORMER FROM 19FF6. SECURE EXISTING WIRES NOT TO BE DEMOLISHED BY COILING AND ATTACHING TO ADJACENT POLE.	EXTEND LIGHTING CIRCUIT 20GG10(E) TO 19GG22(N), 19GG25(E) TO 19GG16(N), 19FF16(E) TO 20FF4(N) AND RESTORE ALL THE OTHER LIGHTING CIRCUITS DISTURBED BY THE WORK.	FOLLOWING SUCCESSFUL COMPLETION OF OUTAGE NUMBER 2, POLES 19FF6, 19FF8, 19FF12A, 19FF12B, 19FF12, 19FF13, 19FF14, 19FF9, 19FF7, 19FF5, 19GG51, 19GG52, 19GG53, 19GG54, 19GG55, 19GG56 AND THE THREE TEMPORARY POWER POLES CAN BE DEMOLISHED. HOWEVER, DEMOLITION OF THE LINES BETWEEN 19FF12B, 19FF12, 19FF13 AND 19FF14 IS IN THE P-989 CONTRACT (BY OTHERS); THIS WORK SHALL BE CLOSELY COORDINATED.
6							INSTALL DUCTBANK SYSTEM FOR THE P-984 FACILITY, COMPLETE WITH SWITCH AND ALL MANHOLES. THIS INCLUDES DUCTBANK FRO POLE 20FF21 TO MH1, FROM MH1 TO SW1 AND MH2, FROM MH2 TO T1 AND FROM T1 INTO P-984.	NONE.	
7	3	EAST FEEDER	20FF21		ALL FACILITIES SERVED BY THE EAST FEEDER	8-10 HOURS	UPON COMPLETION OF TASK 5, CONDUCT OUTAGE FOR INSTALLATION OF FEED TO P-984. THIS INCLUDES INSTALLATION OF RISER AND TERMINATION AT BUSS AND AT SW1.	NONE.	
8							INSTALL PP-01, TRANSFORMER, LIGHTING CONTROL PANEL AND LIGHTING CONDUCTOR IN WEST PARKING LOT AREA.	NONE.	
9	4	OS-103	19GG37, 19GG43, 19GG12A, 18GG1, 18GG5		704, 705, AND 706	2-4 HOURS	TERMINATE LIGHTING CONDUCTOR AT 18GG5 TO EXTEND 1-PHASE, 15KV CIRCUIT FOR LIGHTING OF WEST PARKING LOT.	NONE.	FOLLOWING SUCCESSFUL COMPLETION OF OUTAGE 4, THE WEST PARKING LOT LIGHTS CAN BE POWERED.

SYM	DESCRIPTION	DATE	APPR

NAVFAC

COMMONWEALTH OF VIRGINIA
JAMES WALTER PFEFFERKORN JR.
Lic. No.018432
10 JUNE 2014
PROFESSIONAL ENGINEER
SEAL

ADVANCED ENGINEERING CONSULTANTS
Electrical - Mechanical - Plumbing - Fire Protection
249 CENTRAL PARK AVE
SUITE 330
VIRGINIA BEACH, VA 23462
Phone: 757.502.8882
Fax: 614.486.4082
A/E INFO

APPROVED
FOR COMMANDER NAVFAC / B.L.T.L.
ACTIVITY
SATISFACTORY TO DATE

DES KC | DRW JPW | CHK JWP
PM XXX
BRANCH MANAGER KDL ~~XXX~~
CHIEF ENG/ARCH TLO XXX
FIRE PROTECTION LRP XXX

DEPARTMENT OF THE NAVY
NAVAL FACILITIES ENGINEERING COMMAND
NAVAL FACILITIES ENGINEERING COMMAND – MID-ATLANTIC
HAMPTON ROADS IPT
NAVAL STATION – NORFOLK, VIRGINIA
NAVAL WEAPONS STATION YORKTOWN, VIRGINIA
P-984 REGIMENTAL HEADQUARTERS
DEMOLITION / SEQUENCING PLAN SCHEDULE

SCALE: AS NOTED
EPROJECT NO.: 1113910
CONSTR. CONTR. NO. N40085-13-C-4507
NAVFAC DRAWING NO. 12664836
SHEET OF
ES003

DRAWFORM REVISION: 7 AUGUST 2009

FILE NAME: V:\2013 proj\13-230-01 P984 DB HQ AND P985 DB BEQ\CAD\CAD Sheets - P984 Headquarters\1113910X-ES003 Demolition Sequencing Schedule.dwg LAYOUT NAME: Layout1 PLOTTED: Monday, June 09, 2014 - 2:28pm USER: AEC47

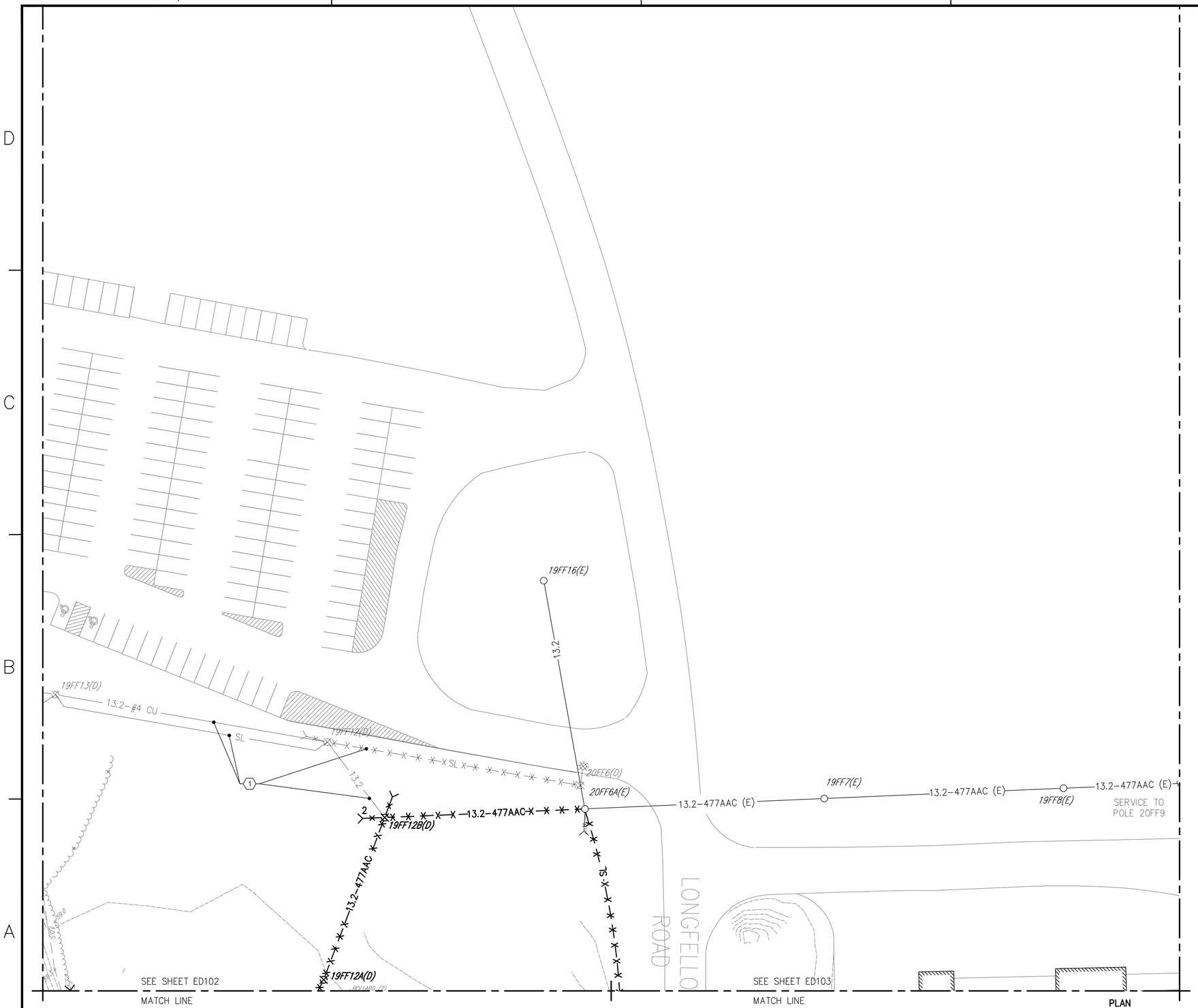

SITE PLAN "AREA C" - ELECTRICAL - DEMOLITION

1" = 30'-0"

SHEET KEYED NOTES

GENERAL NOTES:

A. SEE SHEET ES001 FOR GENERAL NOTES AND LEGEND.
B. SEE STAKING SHEET, ES603, FOR INFORMATION ON OVERHEAD PRIMARY LINES TO BE RETIRED.

DEMOLITION NOTES:

1. DEMOLITION OF THIS SEGMENT OF THE LINE IS IN P989 CONTRACT; SEE PROJECT P985 SHEET ED102. COORDINATE CLOSELY WITH THIS PROJECT GROUP.

KEYPLAN

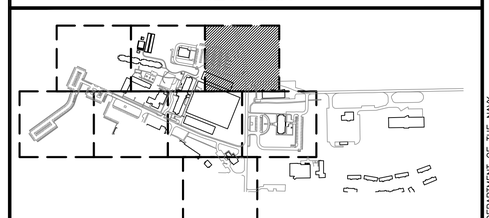

GRAPHIC SCALE

1"=30' 0' 30' 60' 90' 120' 150'

SYM	DESCRIPTION	DATE	APPR

NAVFAC

COMMONWEALTH OF VIRGINIA
JAMES WALTER PFEFFERKORN JR.
Lic. No.018432
10 JUNE 2014
PROFESSIONAL ENGINEER
SEAL

ADVANCED ENGINEERING CONSULTANTS
Electrical - Mechanical - Plumbing - Fire Protection
249 CENTRAL PARK AVE
SUITE 330
VIRGINIA BEACH, VA 23462
Phone: 757.502.8882
Fax: 614.486.4082
A/E INFO

APPROVED
FOR COMMANDER NAVFAC / B.L.T.L.
ACTIVITY
SATISFACTORY TO DATE

DES	KC	DRW	JPW	CHK	JWP
PM	XXX				
BRANCH MANAGER	KDL ~~XXX~~				
CHIEF ENG/ARCH	TLO XXX				
FIRE PROTECTION	LRP XXX				

DEPARTMENT OF THE NAVY
NAVAL FACILITIES ENGINEERING COMMAND ~ MID-ATLANTIC
NAVAL STATION - NORFOLK, VIRGINIA
HAMPTON ROADS IPT
NAVAL FACILITIES ENGINEERING COMMAND
NAVAL WEAPONS STATION
YORKTOWN, VIRGINIA
P-984 REGIMENTAL HEADQUARTERS
SITE PLAN "AREA C" - ELECTRICAL - DEMOLITION

SCALE: AS NOTED
EPROJECT NO.: 1113910
CONSTR. CONTR. NO. N40085-13-C-4507
NAVFAC DRAWING NO. 12664837
SHEET ED101 OF

DRAWFORM REVISION: 7 AUGUST 2009

FILE NAME: V:\2013 proj\13-230-01 P984 DB HQ AND P985 DB BEQ\CAD\CAD Sheets - P984 Headquarters\1113910X-ED101 Site Plan C - Demo.dwg LAYOUT NAME: Work PLOTTED: Monday, June 09, 2014 - 2:28pm USER: AEC47

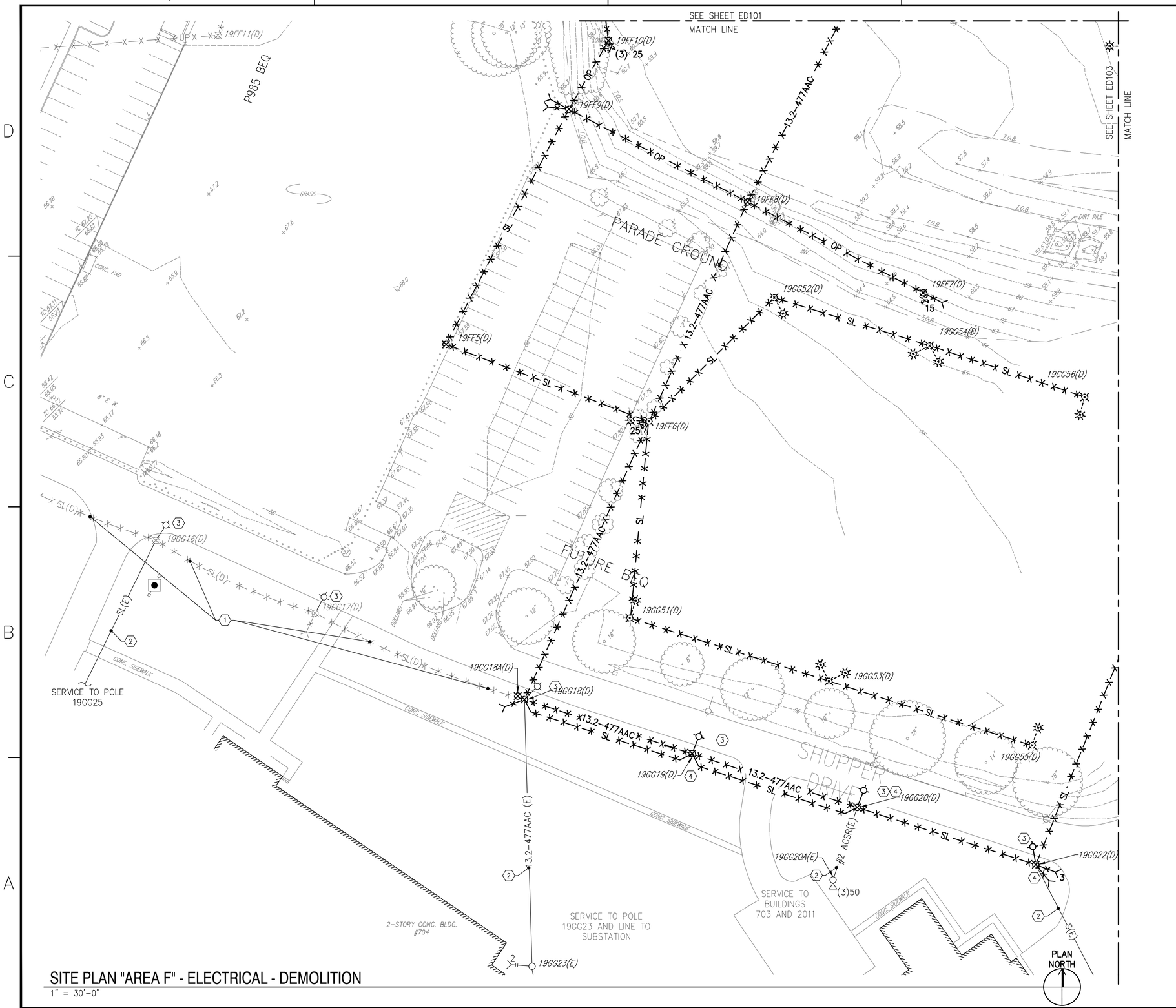

SITE PLAN "AREA F" - ELECTRICAL - DEMOLITION

1" = 30'-0"

SHEET KEYED NOTES

GENERAL NOTES:

A. SEE SHEET ES000 FOR LEGEND.
B. SEE SHEET ES001 FOR GENERAL NOTES.
C. SEE STAKING SHEET, ES603, FOR INFORMATION ON OVERHEAD PRIMARY LINES TO BE RETIRED.

DEMOLITION NOTES:

1. DEMOLITION OF THIS SEGMENT OF THE LINE IS IN P985 CONTRACT; SEE PROJECT P985 SHEET ED104.
2. SEE SHEET ES003, TASK #5, FOR EXTENSION OF EXISTING CIRCUIT.
3. RFI IN PROGRESS TO DETERMINE THE REUSE OR DEMOLITION OF EXISTING STREET LIGHTING FIXTURE..
4. RFI IN PROGRESS TO DEMOLISH THESE POLES WITH A CHANGE ORDER.

KEYPLAN

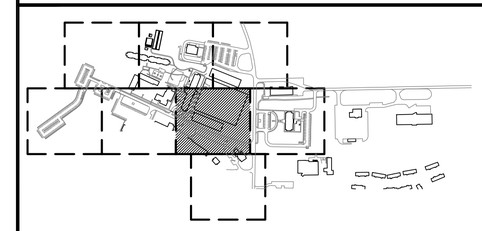

GRAPHIC SCALE

1"=30' 0' 30' 60' 90' 120' 150'

SYM	DESCRIPTION	DATE	APPR

NAVFAC

COMMONWEALTH OF VIRGINIA
JAMES WALTER PFEFFERKORN JR.
Lic. No.018432
10 JUNE 2014
PROFESSIONAL ENGINEER
SEAL

ADVANCED ENGINEERING CONSULTANTS
Electrical - Mechanical - Plumbing - Fire Protection
249 CENTRAL PARK AVE
SUITE 330
VIRGINIA BEACH, VA 23462
Phone: 757.502.8882
Fax: 614.486.4082
A/E INFO

APPROVED
FOR COMMANDER NAVFAC / B.L.T.L.
ACTIVITY
SATISFACTORY TO DATE

DES KC DRW JPW CHK JWP
PM XXX
BRANCH MANAGER KDL ~~XXX~~
CHIEF ENG/ARCH TLO XXX
FIRE PROTECTION LRP XXX

DEPARTMENT OF THE NAVY
NAVAL FACILITIES ENGINEERING COMMAND ~ MID-ATLANTIC
HAMPTON ROADS IPT
NAVAL FACILITIES ENGINEERING COMMAND
NAVAL STATION ~ NORFOLK, VIRGINIA
NAVAL WEAPONS STATION
YORKTOWN, VIRGINIA
P-984 REGIMENTAL HEADQUARTERS
SITE PLAN "AREA F" - ELECTRICAL - DEMOLITION

SCALE: AS NOTED
EPROJECT NO.: 1113910
CONSTR. CONTR. NO. N40085-13-C-4507
NAVFAC DRAWING NO. 12664838
SHEET OF
ED102

DRAWFORM REVISION: 7 AUGUST 2009

FILE NAME: V:\2013 proj\13-230-01 P984 DB HQ AND P985 DB BEQ\CAD\CAD Sheets - P984 Headquarters\1113910X-ED102 Site Plan F - Demo.dwg LAYOUT NAME: Work PLOTTED: Monday, June 09, 2014 - 2:28pm USER: AEC47

SITE PLAN "AREA G" - ELECTRICAL - DEMOLITION

1" = 30'-0"

SHEET KEYED NOTES

GENERAL NOTES:

A. SEE SHEET ES000 FOR LEGEND.
B. SEE SHEET ES001 FOR GENERAL NOTES.
C. SEE STAKING SHEET, ES603, FOR INFORMATION ON OVERHEAD PRIMARY LINES TO BE RETIRED.

⬡ DEMOLITION NOTES:

1. EXISTING OVERHEAD LIGHTING LINE TO BE DEMOLISHED.

KEYPLAN

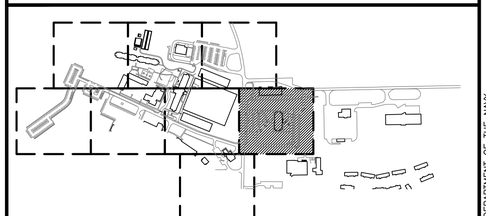

GRAPHIC SCALE

1"=30' 0' 30' 60' 90' 120' 150'

NUM	DESCRIPTION	DATE	APPR

NAVFAC

COMMONWEALTH OF VIRGINIA
JAMES WALTER PFEFFERKORN JR.
Lic. No.018432
10 JUNE 2014
PROFESSIONAL ENGINEER
SEAL

ADVANCED ENGINEERING CONSULTANTS
Electrical - Mechanical - Plumbing - Fire Protection
249 CENTRAL PARK AVE
SUITE 330
VIRGINIA BEACH, VA 23462
Phone: 757.502.8882
Fax: 614.486.4082
A/E INFO

APPROVED
FOR COMMANDER NAVFAC / B.L.T.L.
ACTIVITY
SATISFACTORY TO DATE

DES	KC	DRW	JPW	CHK	JWP
PM	XXX				
BRANCH MANAGER	KDL ~~XXX~~				
CHIEF ENG/ARCH	TLO XXX				
FIRE PROTECTION	LRP XXX				

DEPARTMENT OF THE NAVY
NAVAL FACILITIES ENGINEERING COMMAND
NAVAL FACILITIES ENGINEERING COMMAND ~ MID-ATLANTIC
HAMPTON ROADS IPT
NAVAL STATION ~ NORFOLK, VIRGINIA
NAVAL WEAPONS STATION
YORKTOWN, VIRGINIA
P-984 REGIMENTAL HEADQUARTERS
SITE PLAN "AREA G" ~ ELECTRICAL ~ DEMOLITION

SCALE: AS NOTED
EPROJECT NO.: 1113910
CONSTR. CONTR. NO. N40085-13-C-4507
NAVFAC DRAWING NO. 12664839
SHEET ED103 OF

DRAWFORM REVISION: 7 AUGUST 2009

FILE NAME: V:\2013 proj\13-230-01 P984 DB HQ AND P985 DB BEQ\CAD\CAD Sheets - P984 Headquarters\1113910X-ED103 Site Plan G - Demo.dwg LAYOUT NAME: Work PLOTTED: Monday, June 09, 2014 - 2:29pm USER: AEC47

SITE PLAN "AREA A" - ELECTRICAL - NEW WORK

1" = 30'-0"

SHEET KEYED NOTES

GENERAL NOTES:

A. SEE SHEET ES000 FOR LEGEND.
B. SEE SHEET ES001 FOR GENERAL NOTES.
C. SEE WIRING AND CABLE LEGEND, SHEET ES601, FOR WIRE AND CABLE DETAILS.
D. COORDINATE CLOSELY WITH OTHER TRADES DURING CONSTRUCTION TO AVOID UNPLANNED OUTAGES OF EXISTING POWER AND TELECOMMUNICATION SERVICE AND ENSURE THERE ARE NO CONFLICTS BETWEEN NEW POWER DUCTBANKS, TELECOMMUNICATION DUCTBANKS, OR LIGHTING CIRCUITS WITH ANY OTHER UNDERGROUND SERVICES.

☐ NEW WORK NOTES:

1. TYPICAL LIGHTING CIRCUIT. SEE DETAIL A2, SHEET ES502.
2. SEE SHEET ES104, NEW WORK NOTE 2, FOR ADDITIONAL INFORMATION ON LOAD CENTER "LC1."

KEYPLAN

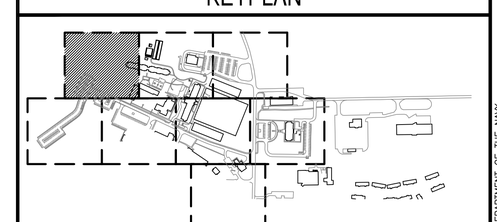

GRAPHIC SCALE

1"=30' 0' 30' 60' 90' 120' 150'

SYM	DESCRIPTION	DATE	APPR

COMMONWEALTH OF VIRGINIA
JAMES WALTER PFEFFERKORN JR.
Lic. No.018432
10 JUNE 2014
PROFESSIONAL ENGINEER
SEAL

ADVANCED ENGINEERING CONSULTANTS
Electrical - Mechanical - Plumbing - Fire Protection
249 CENTRAL PARK AVE
SUITE 330
VIRGINIA BEACH, VA 23462
Phone: 757.502.8882
Fax: 614.486.4082
A/E INFO

APPROVED
FOR COMMANDER NAVFAC / B.L.T.L.
ACTIVITY
SATISFACTORY TO DATE

DES	KC	DRW JPW	CHK JWP
PM	XXX		
BRANCH MANAGER	KDL ~~XXX~~		
CHIEF ENG/ARCH	TLO XXX		
FIRE PROTECTION	LRP XXX		

DEPARTMENT OF THE NAVY
NAVAL FACILITIES ENGINEERING COMMAND
HAMPTON ROADS IPT
NAVAL FACILITIES ENGINEERING COMMAND ~ MID-ATLANTIC
NAVAL STATION ~ NORFOLK, VIRGINIA
NAVAL WEAPONS STATION
YORKTOWN, VIRGINIA
P-984 REGIMENTAL HEADQUARTERS
SITE PLAN "AREA A" - ELECTRICAL - NEW WORK

SCALE: AS NOTED
EPROJECT NO.: 1113910
CONSTR. CONTR. NO. N40085-13-C-4507
NAVFAC DRAWING NO. 12664840
SHEET ES101 OF

DRAWFORM REVISION: 7 AUGUST 2009

FILE NAME: V:\2013 proj\13-230-01 P984 DB HQ AND P985 DB BEQ\CAD\CAD Sheets - P984 Headquarters\1113910X-ES101 Site Plan A.dwg LAYOUT NAME: Work PLOTTED: Monday, June 09, 2014 - 2:29pm USER: AEC47

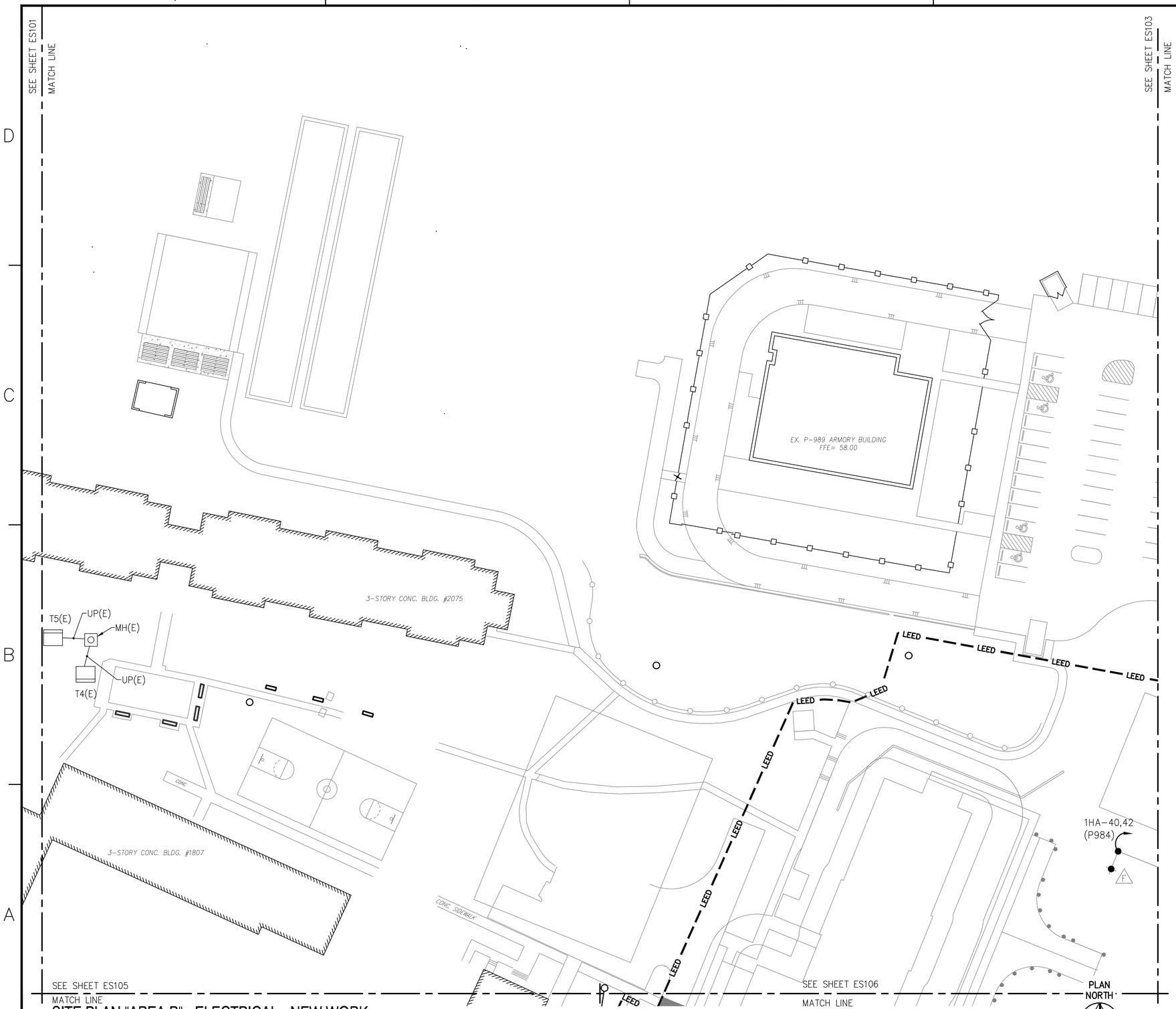

SITE PLAN "AREA B" - ELECTRICAL - NEW WORK

1" = 30'-0"

SHEET KEYED NOTES

GENERAL NOTES:

A. SEE SHEET ES000 FOR LEGEND.
B. SEE SHEET ES001 FOR GENERAL NOTES.
C. SEE WIRING AND CABLE LEGEND, SHEET ES601, FOR WIRE AND CABLE DETAILS.
D. COORDINATE CLOSELY WITH OTHER TRADES DURING CONSTRUCTION TO AVOID UNPLANNED OUTAGES OF EXISTING POWER AND TELECOMMUNICATION SERVICE AND ENSURE THERE ARE NO CONFLICTS BETWEEN INSTALLATION OF POWER DUCTBANKS OR LIGHTING CIRCUITS WITH ANY OTHER UNDERGROUND SERVICES.

KEYPLAN

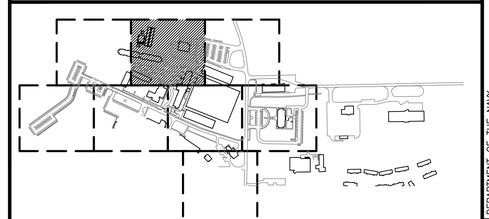

GRAPHIC SCALE

1"=30' 0' 30' 60' 90' 120' 150'

SYM	DESCRIPTION	DATE	APPR

NAVFAC

COMMONWEALTH OF VIRGINIA
JAMES WALTER PFEFFERKORN JR.
Lic. No.018432
10 JUNE 2014
PROFESSIONAL ENGINEER
SEAL

ADVANCED ENGINEERING CONSULTANTS
Electrical - Mechanical - Plumbing - Fire Protection
249 CENTRAL PARK AVE
SUITE 330
VIRGINIA BEACH, VA 23462
Phone: 757.502.8882
Fax: 614.486.4082
A/E INFO

APPROVED
FOR COMMANDER NAVFAC / B.L.T.L.
ACTIVITY
SATISFACTORY TO DATE

DES	KC	DRW JPW	CHK JWP
PM	XXX		
BRANCH MANAGER	KDL ~~XXX~~		
CHIEF ENG/ARCH	TLO XXX		
FIRE PROTECTION	LRP XXX		

DEPARTMENT OF THE NAVY
NAVAL FACILITIES ENGINEERING COMMAND
NAVAL FACILITIES ENGINEERING COMMAND ~ MID-ATLANTIC
HAMPTON ROADS IPT
NAVAL STATION ~ NORFOLK, VIRGINIA
NAVAL WEAPONS STATION
YORKTOWN, VIRGINIA
P-984 REGIMENTAL HEADQUARTERS
SITE PLAN "AREA B" ~ ELECTRICAL ~ NEW WORK

SCALE:	AS NOTED
EPROJECT NO.:	1113910
CONSTR. CONTR. NO.	N40085-13-C-4507
NAVFAC DRAWING NO.	12664841
SHEET	ES102

DRAWFORM REVISION: 7 AUGUST 2009

FILE NAME: Y:\2013 proj\13-230-01 P984 DB HQ AND P985 DB BEQ\CAD\CAD Sheets ~ P984 Headquarters\1113910X-ES102 Site Plan B.dwg LAYOUT NAME: Work PLOTTED: Monday, June 09, 2014 ~ 2:29pm USER: AEX47

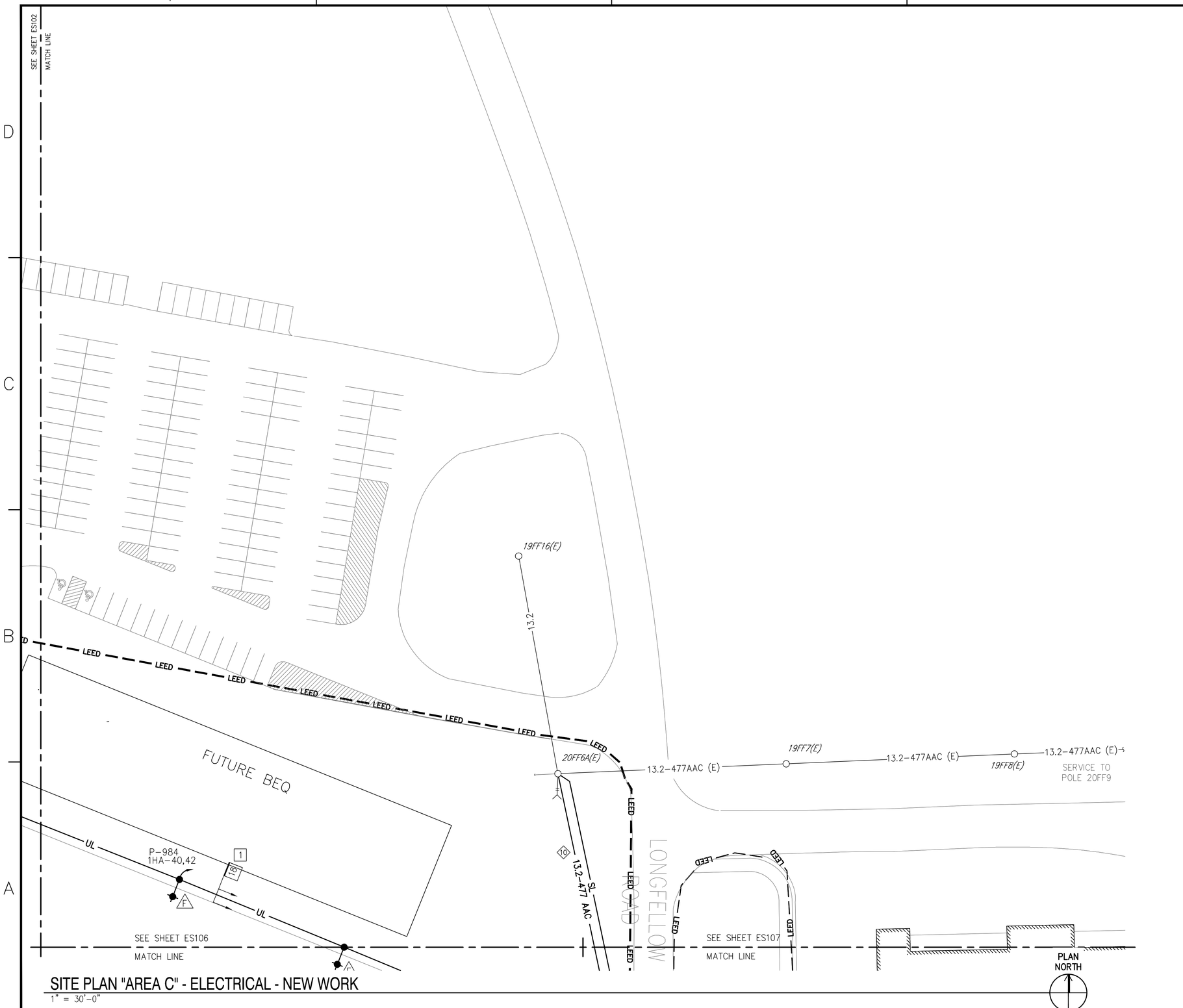

SITE PLAN "AREA C" - ELECTRICAL - NEW WORK

1" = 30'-0"

SHEET KEYED NOTES

GENERAL NOTES:

A. SEE SHEET ES000 FOR LEGEND.
B. SEE SHEET ES001 FOR GENERAL NOTES.
C. SEE WIRING AND CABLE LEGEND, SHEET ES601, FOR WIRE AND CABLE DETAILS.
D. COORDINATE CLOSELY WITH OTHER TRADES DURING CONSTRUCTION TO AVOID UNPLANNED OUTAGES OF EXISTING POWER AND TELECOMMUNICATION SERVICE AND ENSURE THERE ARE NO CONFLICTS BETWEEN INSTALLATION OF POWER DUCTBANKS, TELECOMMUNICATION DUCTBANKS, OR LIGHTING CIRCUITS WITH ANY OTHER UNDERGROUND SERVICES.
E. COORDINATE WITH YORKTOWN ELECTRICAL UTILITY PERSONNEL TO VERIFY VOLTAGES AND AMPERAGES OF EXISTING LIGHTING CIRCUITS WHICH SHALL BE DISRUPTED DURING DEMOLITION AND REESTABLISHED DURING CONSTRUCTION.

☐ NEW WORK NOTES:

1. TYPICAL LIGHTING CIRCUIT. SEE DETAIL A2, SHEET ES502.

KEYPLAN

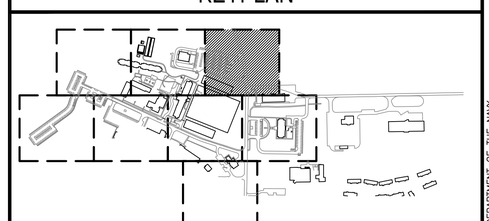

GRAPHIC SCALE

1"=30' 0' 30' 60' 90' 120' 150'

SYM	DESCRIPTION	DATE	APPR

COMMONWEALTH OF VIRGINIA
JAMES WALTER PFEFFERKORN JR.
Lic. No.018432
10 JUNE 2014
PROFESSIONAL ENGINEER
SEAL

ADVANCED ENGINEERING CONSULTANTS
Electrical - Mechanical - Plumbing - Fire Protection
249 CENTRAL PARK AVE
SUITE 330
VIRGINIA BEACH, VA 23462
Phone: 757.502.8882
Fax: 614.486.4082
A/E INFO

APPROVED
FOR COMMANDER NAVFAC / B.L.T.L.
ACTIVITY
SATISFACTORY TO DATE
DES KC DRW JPW CHK JWP
PM XXX
BRANCH MANAGER KDL ~~XXX~~
CHIEF ENG/ARCH TLO XXX
FIRE PROTECTION LRP XXX

DEPARTMENT OF THE NAVY
NAVAL FACILITIES ENGINEERING COMMAND ~ MID-ATLANTIC
HAMPTON ROADS IPT
NAVAL FACILITIES ENGINEERING COMMAND
NAVAL STATION - NORFOLK, VIRGINIA
NAVAL WEAPONS STATION
YORKTOWN, VIRGINIA
P-984 REGIMENTAL HEADQUARTERS
SITE PLAN "AREA C" - ELECTRICAL - NEW WORK

SCALE: AS NOTED
EPROJECT NO.: 1113910
CONSTR. CONTR. NO. N40085-13-C-4507
NAVFAC DRAWING NO. 12664842
SHEET OF
ES103

DRAWFORM REVISION: 7 AUGUST 2009

FILE NAME: V:\2013 proj\13-230-01 P984 DB HQ AND P985 DB BEQ\CAD\CAD Sheets - P984 Headquarters\1113910X-ES103 Site Plan C.dwg LAYOUT NAME: Work PLOTTED: Monday, June 09, 2014 - 2:29pm USER: AEX47

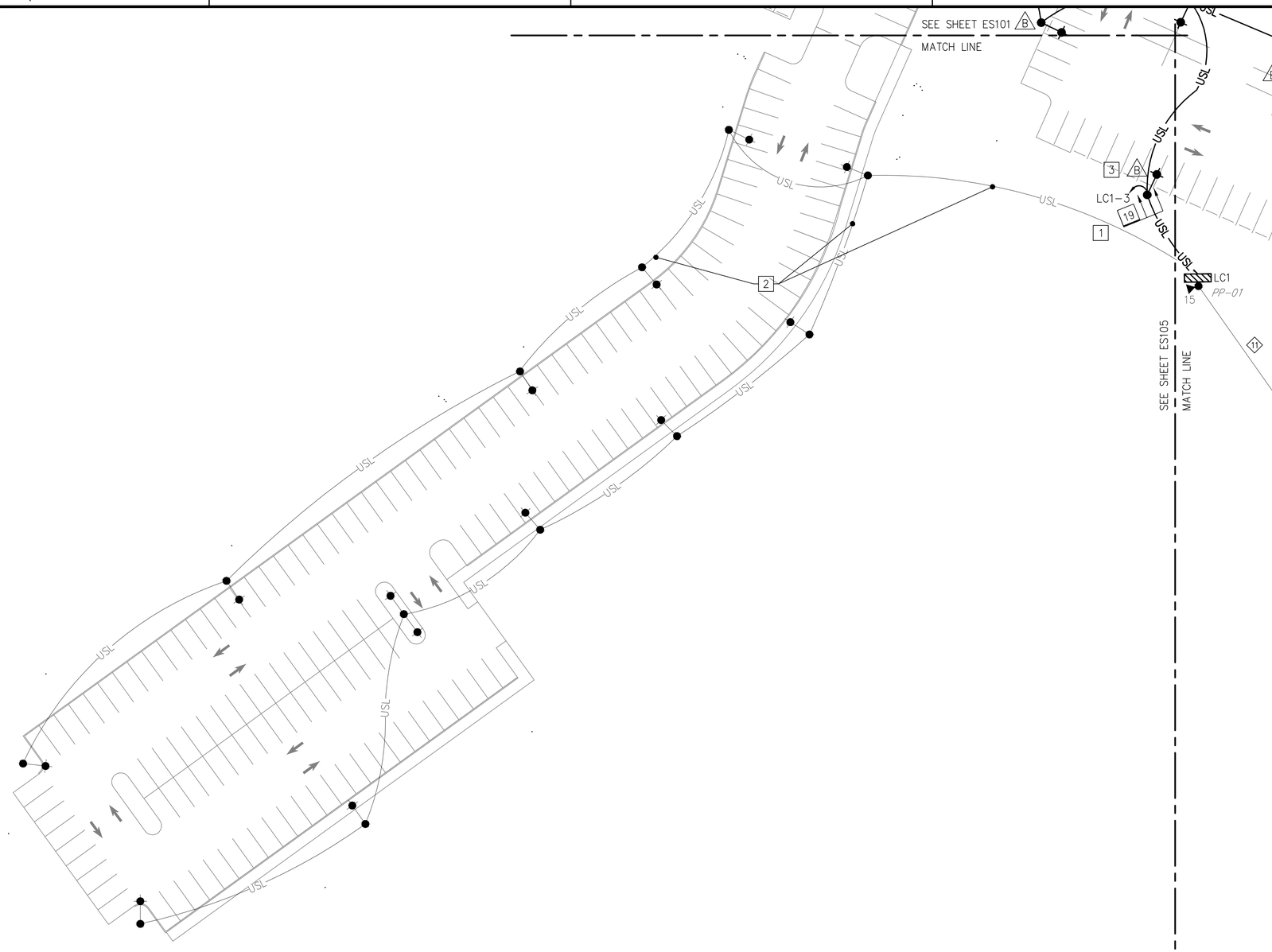

SITE PLAN "AREA D" - ELECTRICAL - NEW WORK

1" = 30'-0"

PLAN NORTH

SHEET KEYED NOTES

GENERAL NOTES:

A. SEE SHEET ES000 FOR LEGEND.
B. SEE SHEET ES001 FOR GENERAL NOTES.
C. SEE WIRING AND CABLE LEGEND, SHEET ES601, FOR WIRE AND CABLE DETAILS.
D. COORDINATE CLOSELY WITH OTHER TRADES DURING CONSTRUCTION TO AVOID UNPLANNED OUTAGES OF EXISTING POWER AND TELECOMMUNICATION SERVICE AND ENSURE THERE ARE NO CONFLICTS BETWEEN INSTALLATION OF POWER DUCTBANKS, TELECOMMUNICATION DUCTBANKS, OR LIGHTING CIRCUITS WITH ANY OTHER UNDERGROUND SERVICES.

☐ NEW WORK NOTES:

1. TYPICAL LIGHTING CIRCUIT. SEE DETAIL A2, SHEET ES502.
2. THIS LIGHTING CIRCUIT IS PART OF P-985 PROJECT; SEE P-985 SHEET ES102 FOR DETAILS.
3. SEE SHEET ES104, NEW WORK NOTE 2, FOR ADDITIONAL INFORMATION ON LOAD CENTER "LC1." SEE DETAIL A5 ON SHEET ES503.

KEYPLAN

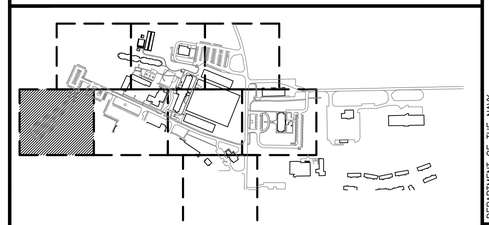

GRAPHIC SCALE

1"=30' 0' 30' 60' 90' 120' 150'

SYM	DESCRIPTION	DATE	APPR

NAVFAC

COMMONWEALTH OF VIRGINIA
JAMES WALTER PFEFFERKORN JR.
Lic. No.018432
10 JUNE 2014
PROFESSIONAL ENGINEER
SEAL

ADVANCED ENGINEERING CONSULTANTS
Electrical - Mechanical - Plumbing - Fire Protection
249 CENTRAL PARK AVE
SUITE 330
VIRGINIA BEACH, VA 23462
Phone: 757.502.8882
Fax: 614.486.4082
A/E INFO

APPROVED
FOR COMMANDER NAVFAC / B.L.T.L.
ACTIVITY
SATISFACTORY TO DATE

DES	KC	DRW	JPW	CHK	JWP
PM	XXX				
BRANCH MANAGER	KDL ~~XXX~~				
CHIEF ENG/ARCH	TLO XXX				
FIRE PROTECTION	LRP XXX				

DEPARTMENT OF THE NAVY
NAVAL FACILITIES ENGINEERING COMMAND
HAMPTON ROADS IPT
NAVAL FACILITIES ENGINEERING COMMAND ~ MID-ATLANTIC
NAVAL STATION - NORFOLK, VIRGINIA
NAVAL WEAPONS STATION
YORKTOWN, VIRGINIA
P-984 REGIMENTAL HEADQUARTERS
SITE PLAN "AREA D" - ELECTRICAL - NEW WORK

SCALE: AS NOTED
EPROJECT NO.: 1113910
CONSTR. CONTR. NO. N40085-13-C-4507
NAVFAC DRAWING NO. 12664843
SHEET OF
ES104

DRAWFORM REVISION: 7 AUGUST 2009

FILE NAME: V:\2013 proj\13-230-01 P984 DB HQ AND P985 DB BEQ\CAD\CAD Sheets - P984 Headquarters\1113910X-ES104 Site Plan D.dwg LAYOUT NAME: Work PLOTTED: Monday, June 09, 2014 - 2:29pm USER: AEX47

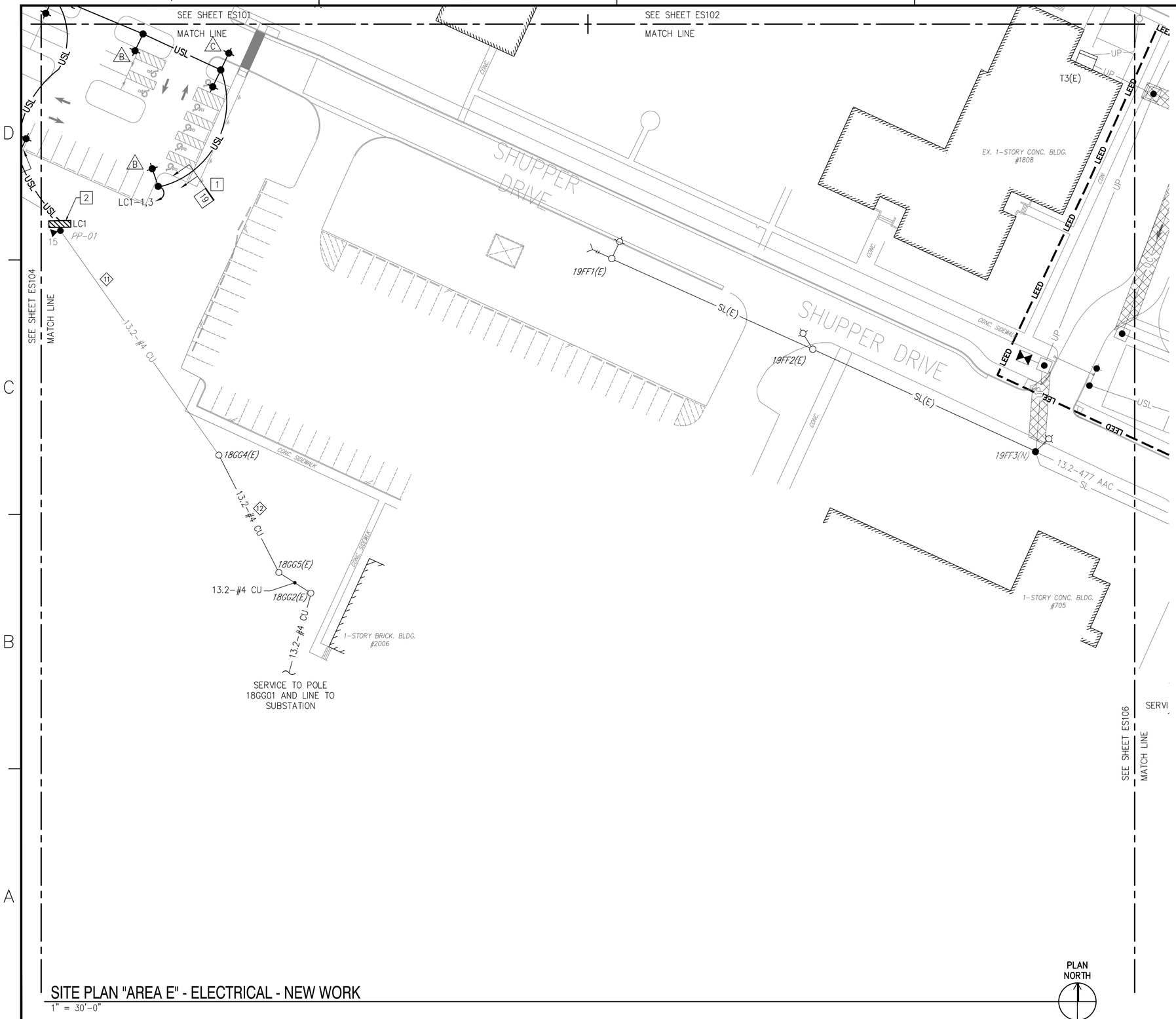

SITE PLAN "AREA E" - ELECTRICAL - NEW WORK

1" = 30'-0"

SHEET KEYED NOTES

GENERAL NOTES:

A. SEE SHEET ES000 FOR LEGEND.
B. SEE SHEET ES001 FOR GENERAL NOTES.
C. SEE WIRING AND CABLE LEGEND, SHEET ES601, FOR WIRE AND CABLE DETAILS.
D. COORDINATE CLOSELY WITH OTHER TRADES DURING CONSTRUCTION TO AVOID UNPLANNED OUTAGES OF EXISTING POWER AND TELECOMMUNICATION SERVICE AND ENSURE THERE ARE NO CONFLICTS BETWEEN NEW POWER DUCTBANKS, TELECOMMUNICATION DUCTBANKS, OR LIGHTING CIRCUITS WITH ANY OTHER UNDERGROUND SERVICES.
E. COORDINATE WITH YORKTOWN ELECTRICAL UTILITY PERSONNEL TO VERIFY VOLTAGES AND AMPERAGES OF EXISTING LIGHTING CIRCUITS WHICH SHALL BE DISRUPTED DURING DEMOLITION AND REESTABLISHED DURING CONSTRUCTION.

☐ NEW WORK NOTES:

1. TYPICAL LIGHTING CIRCUIT. SEE DETAIL A2, SHEET ES502 FOR DETAILS.
2. LC1-NEMA 3R ENCLOSURE MOUNTED TO LIGHT POLE SUCH THAT THE TOP OF THE ENCLOSURE IS 6'-0" ABOVE FINISHED GRADE. ENCLOSURE SHALL CONTAIN; 480V, 60A, 3P SERVICE DISCONNECT SWITCH ; 3-60A, 480V, FUSEHOLDERS WITH 50A FUSES; 1-6 POLE (OR 2-3 POLE) 60A, 480V CONTACTORS WITH 120V COIL(S); 480V/120V CONTROL TRANSFORMER; PHOTOCELL; HAND-OFF-AUTO SWITCH AND ASSOCIATED EQUIPMENT. SEE DETAIL A5/ES503, FOR ADDITIONAL INFORMATION. PHOTOCELL SHALL BE MOUNTED ON POLE TOP. SOURCE FOR LC1 IS SINGLE-PHASE, POLE-MOUNTED, 13.2kV-480V TRANSFORMER ON POLE PP-01. POWER POLE NUMBER SHALL BE ASSIGNED BY YORKTOWN UTILITIES.

KEYPLAN

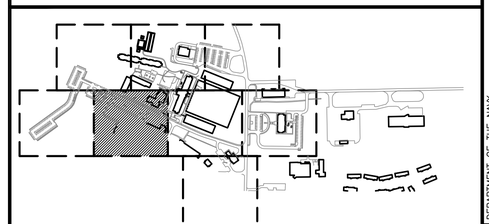

GRAPHIC SCALE

1"=30' 0' 30' 60' 90' 120' 150'

SYM	DESCRIPTION	DATE	APPR

NAVFAC

COMMONWEALTH OF VIRGINIA
JAMES WALTER PFEFFERKORN JR.
Lic. No.018432
10 JUNE 2014
PROFESSIONAL ENGINEER
SEAL

ADVANCED ENGINEERING CONSULTANTS
Electrical - Mechanical - Plumbing - Fire Protection
249 CENTRAL PARK AVE
SUITE 330
VIRGINIA BEACH, VA 23462
Phone: 757.502.8882
Fax: 614.486.4082
A/E INFO

APPROVED
FOR COMMANDER NAVFAC / B.L.T.L.
ACTIVITY
SATISFACTORY TO DATE

DES	KC	DRW JPW	CHK JWP
PM	XXX		
BRANCH MANAGER	KDL ~~XXX~~		
CHIEF ENG/ARCH	TLO XXX		
FIRE PROTECTION	LRP XXX		

DEPARTMENT OF THE NAVY
NAVAL FACILITIES ENGINEERING COMMAND
NAVAL FACILITIES ENGINEERING COMMAND ~ MID-ATLANTIC
HAMPTON ROADS IPT
NAVAL STATION ~ NORFOLK, VIRGINIA
NAVAL WEAPONS STATION
YORKTOWN, VIRGINIA
P-984 REGIMENTAL HEADQUARTERS
SITE PLAN "AREA E" ~ ELECTRICAL ~ NEW WORK

SCALE: AS NOTED
EPROJECT NO.: 1113910
CONSTR. CONTR. NO. N40085-13-C-4507
NAVFAC DRAWING NO. 12664844
SHEET OF
ES105

DRAWFORM REVISION: 7 AUGUST 2009

FILE NAME: V:\2013 proj\13-230-01 P984 DB HQ AND P985 DB BEQ\CAD\CAD Sheets - P984 Headquarters\1113910X-ES105 Site Plan E.dwg LAYOUT NAME: Work PLOTTED: Monday, June 09, 2014 - 2:30pm USER: AEC47

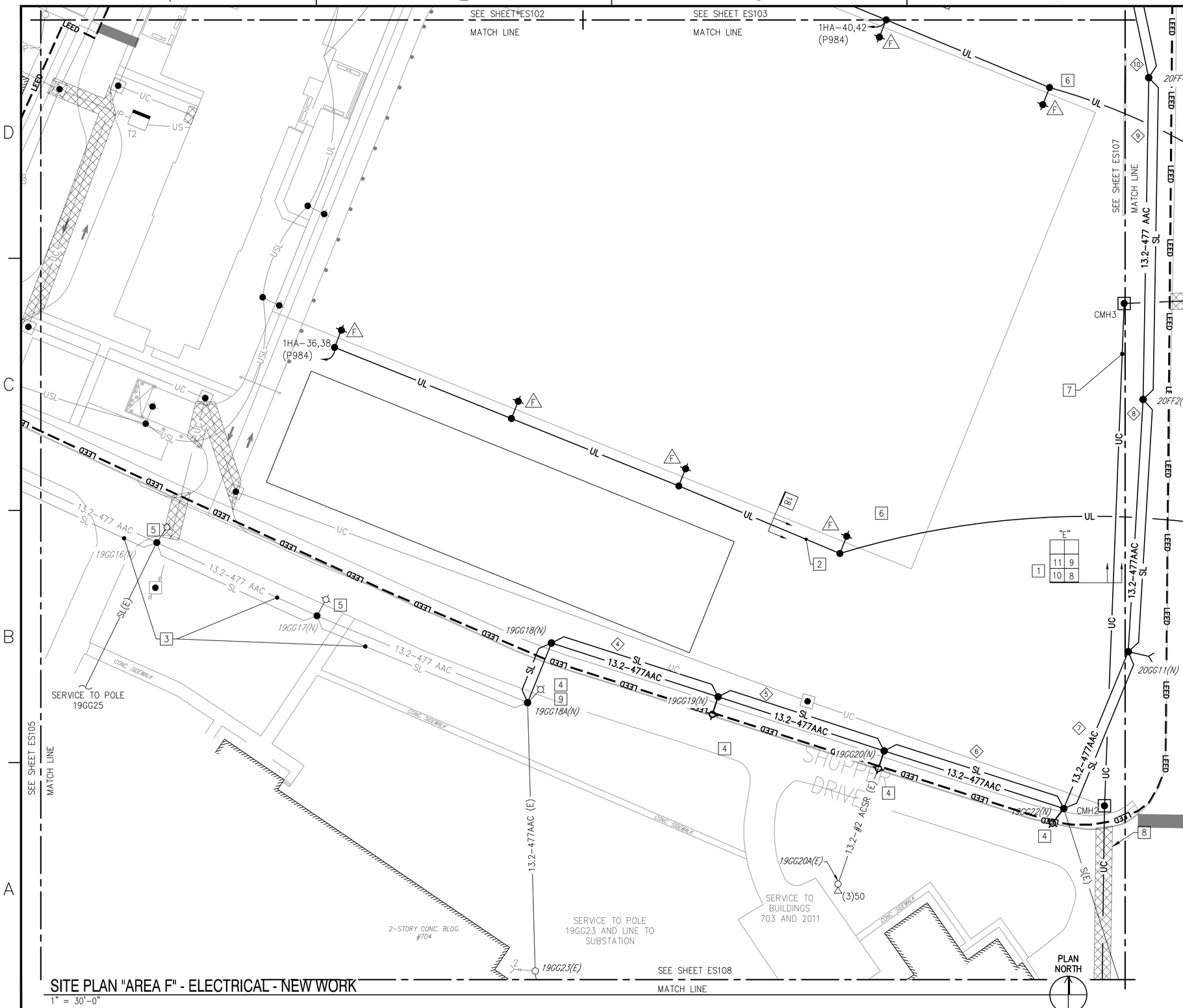

SITE PLAN "AREA F" - ELECTRICAL - NEW WORK

1" = 30'-0"

SHEET KEYED NOTES

GENERAL NOTES:

A. SEE SHEET ES000 FOR LEGEND.
B. SEE SHEET ES001 FOR GENERAL NOTES.
C. SEE WIRING AND CABLE LEGEND, SHEET ES601, FOR WIRE AND CABLE DETAILS.
D. COORDINATE CLOSELY WITH OTHER TRADES DURING CONSTRUCTION TO AVOID UNPLANNED OUTAGES OF EXISTING POWER AND TELECOMMUNICATION SERVICE AND ENSURE THERE ARE NO CONFLICTS BETWEEN NEW POWER DUCTBANKS, TELECOMMUNICATION DUCTBANKS, OR LIGHTING CIRCUITS WITH ANY OTHER UNDERGROUND SERVICES.
E. COORDINATE WITH YORKTOWN ELECTRICAL UTILITY PERSONNEL TO VERIFY VOLTAGES AND AMPERAGES OF EXISTING LIGHTING CIRCUITS WHICH SHALL BE DISRUPTED DURING DEMOLITION AND REESTABLISHED DURING CONSTRUCTION.

☐ NEW WORK NOTES:

1. SEE DETAIL B3, SHEET ES502.
2. TYPICAL LIGHTING CIRCUIT. SEE DETAIL A2, SHEET ES502.
3. THESE COMPONENTS OF THE DISTRIBUTION SYSTEM IN P-985 PROJECT; SEE P985 SHEET ES104 FOR DETAILS.
4. LIGHT FIXTURE TO BE REINSTALLED ON NEW POLE; TYPICAL. NEW FIXTURE SHALL BE MOUNTED AT SAME HEIGHT AS THE DEMOLISHED FIXTURE.
5. EXISTING LIGHT FIXTURE TO BE REINSTALLED BY PROJECT P-985. SEE PROJECT P-985 SHEET ES104.
6. NEW STORM LINE SHALL PARALLEL LINE OF NEW LIGHTING FIXTURES. EC SHALL COORDINATE EXACT LIGHT FIXTURE PLACEMENT WITH SITE CIVIL; SEE SHEET CU103 FOR ADDITIONAL DETAILS.
7. DUCTBANK COMPRISED OF SIX(6) 4" CONDUITS. SEE WIRING AND CABLE LEGEND, SHEET ES601, FOR ADDITIONAL INFORMATION.
8. MINIMUM DEPTH TO TOP OF DUCTBANK SHALL BE 24" WHERE DUCTBANK CROSSES ROADS OR DRIVEWAYS.
9. POLE 19GG18A SHALL BE A NEW, FIFTY (50) FOOT TALL, CLASS 3 UTILITY POLE. SEE SHEET ES603 FOR ADDITIONAL INFORMATION.

KEYPLAN

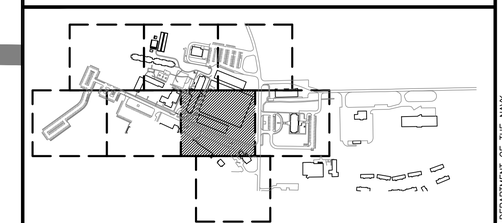

GRAPHIC SCALE

1"=30' 0' 30' 60' 90' 120' 150'

SYM	DESCRIPTION	DATE	APPR

NAVFAC

COMMONWEALTH OF VIRGINIA
JAMES WALTER PFEFFERKORN JR.
Lic. No.018432
10 JUNE 2014
PROFESSIONAL ENGINEER
SEAL

ADVANCED ENGINEERING CONSULTANTS
Electrical - Mechanical - Plumbing - Fire Protection
249 CENTRAL PARK AVE
SUITE 330
VIRGINIA BEACH, VA 23462
Phone: 757.502.8882
Fax: 614.486.4082
A/E INFO

APPROVED
FOR COMMANDER NAVFAC / B.L.T.L.
ACTIVITY
SATISFACTORY TO DATE

DES	KC	DRW JPW	CHK JWP
PM	XXX		
BRANCH MANAGER	KDL ~~XXX~~		
CHIEF ENG/ARCH	TLO XXX		
FIRE PROTECTION	LRP XXX		

DEPARTMENT OF THE NAVY
NAVAL FACILITIES ENGINEERING COMMAND
HAMPTON ROADS IPT
NAVAL FACILITIES ENGINEERING COMMAND ~ MID-ATLANTIC
NAVAL STATION - NORFOLK, VIRGINIA
NAVAL WEAPONS STATION
YORKTOWN, VIRGINIA
P-984 REGIMENTAL HEADQUARTERS
SITE PLAN "AREA F" - ELECTRICAL - NEW WORK

SCALE:	AS NOTED
EPROJECT NO.:	1113910
CONSTR. CONTR. NO.	N40085-13-C-4507
NAVFAC DRAWING NO.	12664845
SHEET	ES106

DRAWFORM REVISION: 7 AUGUST 2009

FILE NAME: V:\2013 proj\13-230-01 P984 DB HQ AND P985 DB BEQ\CAD\CAD Sheets - P984 Headquarters\1113910X-ES106 Site Plan F.dwg LAYOUT NAME: Work PLOTTED: Monday, June 09, 2014 - 2:30pm USER: AEC47

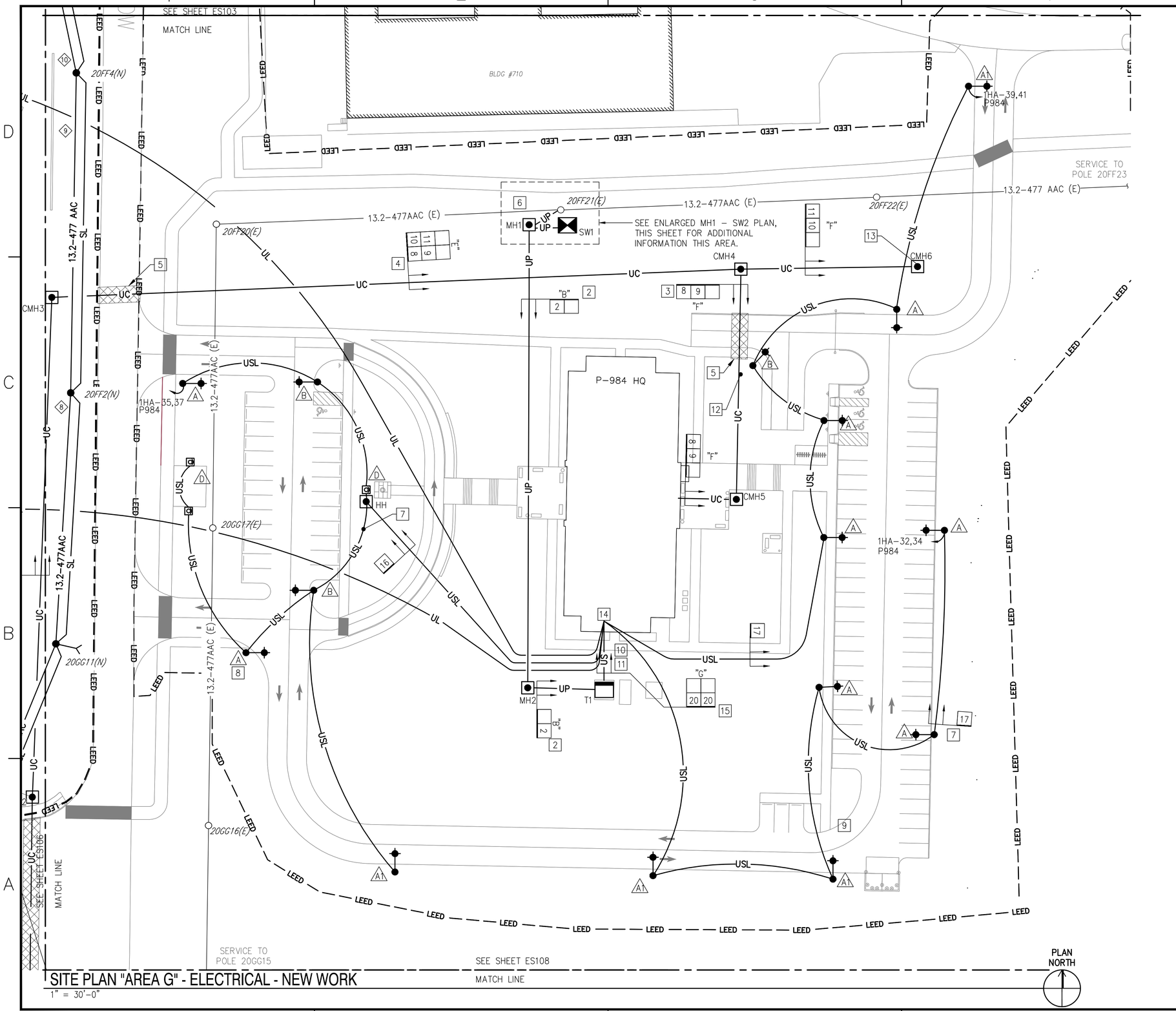

SITE PLAN "AREA G" - ELECTRICAL - NEW WORK

1" = 30'-0"

SHEET KEYED NOTES

GENERAL NOTES:

A. SEE SHEET ES000 FOR LEGEND.
B. SEE SHEET ES001 FOR GENERAL NOTES.
C. SEE WIRING AND CABLE LEGEND, SHEET ES601, FOR WIRE AND CABLE DETAILS.
D. COORDINATE CLOSELY WITH OTHER TRADES DURING CONSTRUCTION TO AVOID UNPLANNED OUTAGES OF EXISTING POWER AND TELECOMMUNICATION SERVICE AND ENSURE THERE ARE NO CONFLICTS BETWEEN NEW POWER DUCTBANKS, TELECOMMUNICATION DUCTBANKS, OR LIGHTING CIRCUITS WITH ANY OTHER UNDERGROUND SERVICES.
E. PROVIDE LABEL FOR EACH LIGHTING CIRCUIT TO CLEARLY INDICATE PANEL FED FROM AND CIRCUIT LOCATION.
F. ALL ELECTRICAL AND COMMUNICATION MANHOLES SHALL BE TYPE 1.
G. COORDINATE WITH YORKTOWN ELECTRICAL UTILITY PERSONNEL TO VERIFY VOLTAGES AND AMPERAGES OF EXISTING LIGHTING CIRCUITS WHICH SHALL BE DISRUPTED DURING DEMOLITION AND REESTABLISHED DURING CONSTRUCTION.

☐ NEW WORK NOTES:

1. SEE DETAIL C2, SHEET ES502.
2. SEE DETAIL C3, SHEET ES502; SEE SHEET ES601 FOR SIZES. SEE INSET THIS SHEET FOR DUCTBANK CONFIGURATIONS.
3. SEE DETAIL B4, SHEET ES502.
4. SEE DETAIL B3, SHEET ES502.
5. MINIMUM DEPTH TO TOP OF DUCTBANK SHALL BE 24 INCHES WHERE THE DUCTBANK CROSSES ROAD OR DRIVEWAY.
6. DESIGN INTENT IS TO RE-USE EXISTING POLE PROVIDED IT IS OF ADEQUATE HEIGHT AND STRENGTH FOR THIS PURPOSE.
7. TYPICAL LIGHTING CIRCUIT. SEE DETAIL A2, SHEET ES502.
8. COORDINATE EXACT LOCATION OF LIGHTING FIXTURE WITH NEW SIDEWALK. SEE SHEET CU104 FOR ADDITIONAL INFORMATION.
9. COORDINATE EXACT LOCATION OF LIGHTING FIXTURE WITH FIRE ACCESS ROAD. SEE SHEET CU104 FOR ADDITIONAL DETAILS.
10. PROVIDE 1" CONDUIT FROM XFMR T1 TO WATER METER. SEE SHEET CU104 FOR ADDITIONAL DETAIL.
11. PROVIDE 1" RACEWAY AND PULL STRING FROM TRANSFORMER T1 TO COMM ROOM FOR AMI METER
12. COORDINATE EXACT LOCATION OF COMMUNICATIONS DUCTBANK WITH EXISTING FIRE LINE. SEE SHEET CU104 FOR DETAIL.
13. PROVIDE DUCTBANK FROM BUILDING 703 TO MANHOLE PROVIDED BY P986. SEE WIRING AND CABLE LEGEND, SHEET ES601, FOR ADDITIONAL INFORMATION.
14. LIGHTING CIRCUITS SHOWN THIS SHEET SHALL BE SERVED AND CONTROLLED FROM THE MAIN ELECTRICAL ROOM, ROOM 114.
15. SEE DETAIL A3, SHEET ES502.

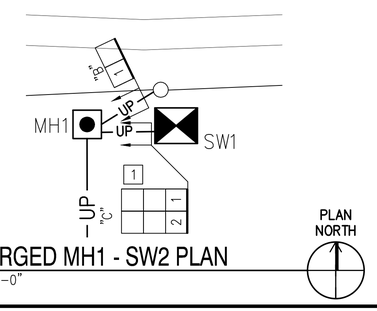

ENLARGED MH1 - SW2 PLAN

1" = 20'-0"

KEY PLAN

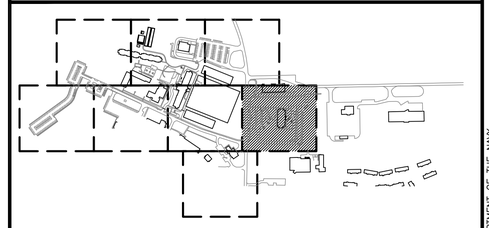

GRAPHIC SCALE

1"=20' 0' 20' 40' 60' 80' 100'

1"=30' 0' 30' 60' 90' 120' 150'

SYM	DESCRIPTION	DATE	APPR

NAVFAC

COMMONWEALTH OF VIRGINIA
JAMES WALTER PFEFFERKORN JR.
Lic. No.018432
10 JUNE 2014
PROFESSIONAL ENGINEER
SEAL

ADVANCED ENGINEERING CONSULTANTS
Electrical - Mechanical - Plumbing - Fire Protection
249 CENTRAL PARK AVE
SUITE 330
VIRGINIA BEACH, VA 23462

Phone: 757.502.8882
Fax: 614.486.4082

A/E INFO

APPROVED

FOR COMMANDER NAVFAC / B.L.T.L.

ACTIVITY

SATISFACTORY TO DATE

DES	KC	DRW JPW	CHK JWP
PM	XXX		
BRANCH MANAGER	KDL ~~XXX~~		
CHIEF ENG/ARCH	TLO XXX		
FIRE PROTECTION	LRP XXX		

DEPARTMENT OF THE NAVY
NAVAL FACILITIES ENGINEERING COMMAND ~ MID-ATLANTIC
HAMPTON ROADS IPT
NAVAL FACILITIES ENGINEERING COMMAND
NAVAL STATION – NORFOLK, VIRGINIA
NAVAL WEAPONS STATION
YORKTOWN, VIRGINIA

P-984 REGIMENTAL HEADQUARTERS

SITE PLAN "AREA G" – ELECTRICAL – NEW WORK

SCALE:	AS NOTED
EPROJECT NO.:	1113910
CONSTR. CONTR. NO.	N40085-13-C-4507
NAVFAC DRAWING NO.	12664846
SHEET	OF

ES107

DRAWFORM REVISION: 7 AUGUST 2009

FILE NAME: V:\2013 proj\13-230-01 P984 DB HQ AND P985 DB BEQ\CAD\CAD Sheets - P984 Headquarters\1113910X-ES107 Site Plan G.dwg LAYOUT NAME: Work PLOTTED: Monday, June 09, 2014 - 2:31pm USER: AEX47

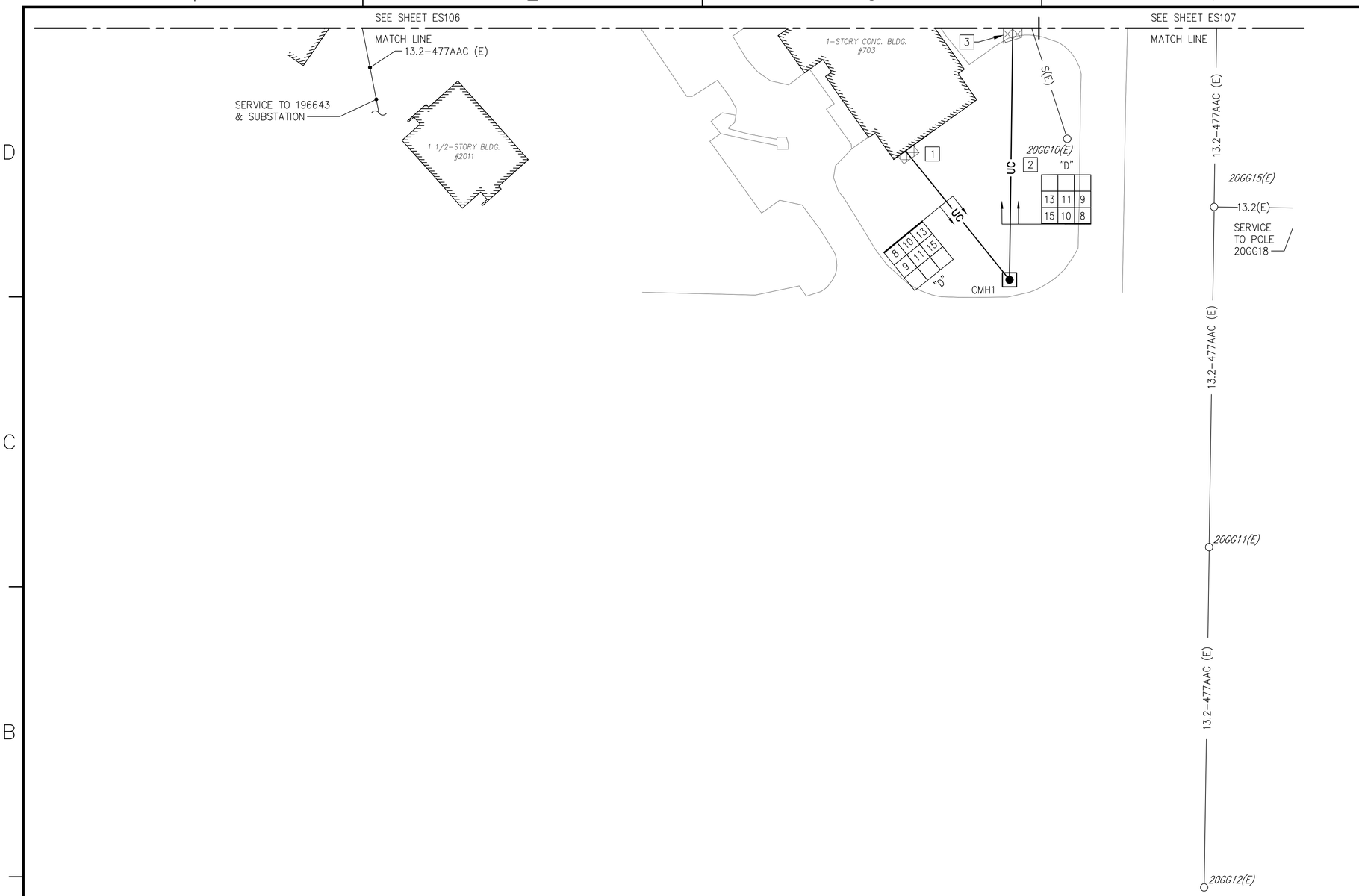

SITE PLAN "AREA H" - ELECTRICAL - NEW WORK

1" = 30'-0"

PLAN NORTH

SHEET KEYED NOTES

GENERAL NOTES:

A. SEE SHEET ES000 FOR LEGEND.
B. SEE SHEET ES001 FOR GENERAL NOTES.
C. SEE WIRING AND CABLE LEGEND, SHEET ES601, FOR WIRE AND CABLE DETAILS.
D. COORDINATE CLOSELY WITH OTHER TRADES DURING CONSTRUCTION TO AVOID UNPLANNED OUTAGES OF EXISTING POWER AND TELECOMMUNICATION SERVICE AND ENSURE THERE ARE NO CONFLICTS BETWEEN NEW POWER DUCTBANKS, TELECOMMUNICATION DUCTBANKS, OR LIGHTING CIRCUITS WITH ANY OTHER UNDERGROUND SERVICES.
E. COORDINATE WITH YORKTOWN ELECTRICAL UTILITY PERSONNEL TO VERIFY VOLTAGES AND AMPERAGES OF EXISTING LIGHTING CIRCUITS WHICH SHALL BE DISRUPTED DURING DEMOLITION AND REESTABLISHED DURING CONSTRUCTION.

☐ NEW WORK NOTES:

1. THE CONNECTION POINT FOR THE SITE TELECOMMUNICATIONS SYSTEMS SHALL BE BUILDING 703. COORDINATE INSTALLATION WITH THE BASE COMMUNICATIONS OFFICER.
2. SEE DETAIL B2, SHEET ES502.
3. MINIMUM DEPTH TO TOP OF DUCTBANK SHALL BE 24" WHERE DUCTBANK CROSSES ROAD OR DRIVEWAY.

KEYPLAN

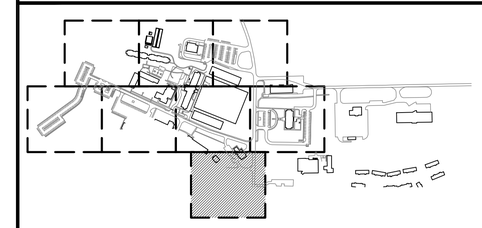

GRAPHIC SCALE

1"=30' 0' 30' 60' 90' 120' 150'

SYM	DESCRIPTION	DATE	APPR

NAVFAC

COMMONWEALTH OF VIRGINIA
JAMES WALTER PFEFFERKORN JR.
Lic. No.018432
10 JUNE 2014
PROFESSIONAL ENGINEER
SEAL

ADVANCED ENGINEERING CONSULTANTS
Electrical - Mechanical - Plumbing - Fire Protection
249 CENTRAL PARK AVE
SUITE 330
VIRGINIA BEACH, VA 23462
Phone: 757.502.8882
Fax: 614.486.4082
A/E INFO

APPROVED
FOR COMMANDER NAVFAC / B.L.T.L.
ACTIVITY
SATISFACTORY TO DATE

DES	KC	DRW JPW	CHK JWP
PM	XXX		
BRANCH MANAGER	KDL ~~XXX~~		
CHIEF ENG/ARCH	TLO XXX		
FIRE PROTECTION	LRP XXX		

DEPARTMENT OF THE NAVY
NAVAL FACILITIES ENGINEERING COMMAND
HAMPTON ROADS IPT
NAVAL FACILITIES ENGINEERING COMMAND ~ MID-ATLANTIC
NAVAL STATION - NORFOLK, VIRGINIA
NAVAL WEAPONS STATION
YORKTOWN, VIRGINIA
P-984 REGIMENTAL HEADQUARTERS
SITE PLAN "AREA H" - ELECTRICAL - NEW WORK

SCALE: AS NOTED
EPROJECT NO.: 1113910
CONSTR. CONTR. NO. N40085-13-C-4507
NAVFAC DRAWING NO. 12664847
SHEET ES108 OF

DRAWFORM REVISION: 7 AUGUST 2009

FILE NAME: V:\2013 proj\13-230-01 P984 DB HQ AND P985 DB BEQ\CAD\CAD Sheets - P984 Headquarters\1113910X-ES108 Site Plan H.dwg LAYOUT NAME: Work PLOTTED: Monday, June 09, 2014 - 2:31pm USER: AEX47

POLE LINE MATERIAL LIST

1. FLAT STEEL BRACE (TWO PIECES)
2. MACHINE BOLT, 3/8" X LENGTH NEEDED WITH WASHER, NUT AND LOCKWASHER
3. 8' WOOD CROSSARM WITH CROSS SECTION DIMENSIONS OF 3 1/2" X 4 1/2"
4. MACHINE BOLT, 5/8" X LENGTH NEEDED WITH WASHER, NUT AND LOCKWASHER
5. TIMBER CONNECTOR
6. LAGSCREW, 1/2" X 4"
7. ANGLE STEEL BRACE (TWO PIECES)
8. MACHINE BOLT, 1/2" X LENGTH NEEDED, WITH WASHER, NUT & LOCKWASHER
9. DEADEND BOX
10. STEEL PIN, HOT DIPPED GALV CLAMP TYPE, CHANCE #14332
11. PIN INSULATOR, C NECK, PPC #261-S
12. GRID GAIN, USED ONLY WHEN THERE IS NO POLE GAIN
13. WOOD BRACES, (2) ALUMAFORM #RA-6018
14. 10' WOOD CROSSARM WITH CROSS SECTION DIMENSIONS OF 3 1/2" X 4 1/2"
15. 5/8" EYE NUT
16. 5/8" EYE BOLT, LENGTH AS NEEDED, WITH WASHER, NUT & LOCKWASHER
17. EXTENSION LINK
18. BELL TYPE SUSPENSION INSULATOR WITH CONNECTING HARDWARE
19. STRAIN CLAMP
20. STEEL ANGLE PIN
21. CLUSTER MOUNTING BRACKET, STEEL
22. TRANSFORMER GROUNDING CONNECTION
23. STIRRUP
24. SECONDARY LEAD SUPPORT BRACKET
25. ADAPTER PLATE FOR CLUSTER MOUNTING
26. CLEVIS BRACKET FOR SPOOL INSULATOR
27. SPOOL INSULATOR
28. U BOLT CLAMP
29. PREFORMED GUY GRIP
30. POLE EYE PLATE, CHANCE #GEP6
31. FIBERGLASS ROD, CHANCE #GS21144CC1
32. GUY WIRE, 10/7 ALUMOWELD
33. #4 WP CU. SOFT DRAWN GROUND WIRE
34. GROUND CLAMP
35. CONDUIT COUPLING
36. CONDUIT BEND
37. INSULATED BUSHING
38. ALUMAFORM CSO WITH STRAP, SEE SPEC
39. HOT LINE CLAMP
40. FUSED CUTOUT, AS SPECIFIED
41. SURGE ARRESTER, AS SPECIFIED
42. POLE TOP PIN (RIDGE PIN) - 24 INCHES LONG
43. CROSSARM ANGLE PIN
44. ANGLE POLE TOP PIN
45. 1/0 XHHW

POLE LINE MATERIAL LIST

SKETCH DATE	JUNE 2002	STYLE	OH-1.5

POLE LINE MATERIAL LIST

46. TRI-MOUNT BRACKET
47. TERMINATOR
48. MOUNTING BRACKET
49. CABLE GRIP HANGER
50. HOSE CLAMP
51. STUD, 3/4" X 1-3/4"
52. LINE POST INSULATOR
53. TRIPLE INSULATOR BRACKET
54. ANGLE CLAMP
55. INSULATOR, LINE POST CLAMP
56. 4' CROSSARM
57. CROSSARM GAIN BRACKET
58. PULLEY BRACKET
59. WEDGE CLAMP
60. MIDSPAN SERVICE CLAMP
61. STUD, 7"
62. SADDLE, ANGLE
63. SADDLE CROSSARM
64. FITTING, POLE TOP
65. CONNECTOR
66. SUSPENSION CLAMP
67. TIE, SERVICE CABLE
68. FIBERGLASS STRAIN INSULATOR, CHANCE #GS21155CC1, LENGTH AS REQUIRED.
69. PVC RISER SHIELD
70. PVC EXTENSION SHIELD
71. PVC BACK PLATE
72. 8' WOOD CROSSARM WITH CROSS SECTION DIMENSIONS OF 4 3/4" X 5 3/4"
73. 10' WOOD CROSSARM WITH CROSS SECTION DIMENSIONS OF 4 3/4" X 5 3/4"
74. BACK-UP CURRENT LIMITING FUSE

POLE LINE MATERIAL LIST

SKETCH DATE	JUNE 2002	STYLE	OH-1.5A

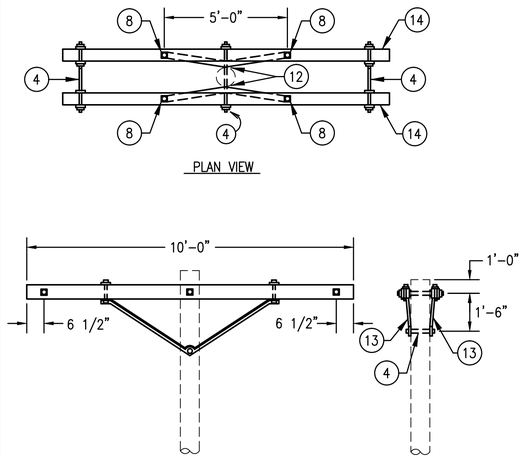

DX10-AB

SKETCH DATE	JUNE 2002	STYLE	OH-8

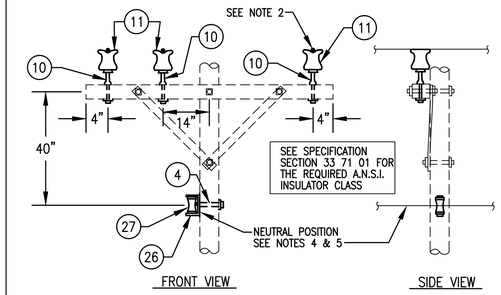

NOTES

1. DRAWING REPRESENTS SYMBOL F3-N FOR VOLTAGES UP TO 15KV (3-PHASE CONDUCTORS). MODIFY INSULATOR ASSEMBLIES AS REQUIRED TO COINCIDE WITH THE NUMBER OF PHASE CONDUCTORS.
2. FOR CIRCUIT VOLTAGE OPERATING LEVELS GREATER THAN 15KV, SUBSTITUTE (52) FOR (11) AND (61) FOR (10).
3. OMIT ITEMS (4), (26) AND (27) FOR NEUTRAL ON ALL SYMBOLS WHICH DO NOT CONTAIN "N".
4. IT SHALL BE PERMISSIBLE TO UTILIZE THE F4 SYMBOL & MOUNT THE NEUTRAL (AS THE FOURTH CONDUCTOR) ON THE CROSSARM WHEN MAINTAINING EXISTING FACILITIES FOR VOLTAGES UP TO 15KV ON WHICH THE NEUTRAL IS LOCATED ON THE CROSSARM. THIS NON-STANDARD ARRANGEMENT SHALL NOT BE USED FOR NEW LINE EXTENSIONS.
5. MODIFY THE 40" NEUTRAL SPACING AS INDICATED ON OTHER SKETCHES FOR TRANSFORMER AND U.G. TERMINAL INSTALLATIONS.

F3-N, F3, F2-N, F2, F1, F4
(0-50KV)

SKETCH DATE	JUNE 2002	STYLE	OH-13

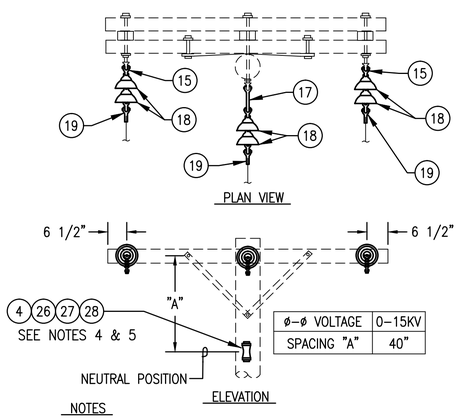

ø-ø VOLTAGE	0-15KV
SPACING "A"	40"

NOTES

1. DRAWING REPRESENTS SYMBOL FDE3-N. ELIMINATE INSULATOR ASSEMBLY FOR MIDDLE PHASE ON SYMBOLS FDE2 AND FDE2-N.
2. DRAWING REPRESENTS DEADEND ASSEMBLY FOR CIRCUIT VOLTAGES >5KV AND ≤15KV. REFER TO SPECIFICATIONS SECTION 16301 FOR NUMBER AND CLASS OF INSULATORS REQUIRED FOR EACH VOLTAGE LEVEL.
3. OMIT ITEMS (4), (26) (27) AND (28) FOR NEUTRAL ON FDE2 AND FDE3.
4. FOR NEUTRAL CONDUCTOR LARGER THAN #2 AWG, SUBSTITUTE (19) FOR (26), (27) AND (28).
5. MODIFY THE NEUTRAL SPACING "A" AS INDICATED ON OTHER SKETCHES FOR TRANSFORMER AND U.G. TERMINAL INSTALLATIONS.

FDE3-N, FDE3, FDE2-N, FDE2
(0-50KV)

SKETCH DATE	JUNE 2002	STYLE	OH-15

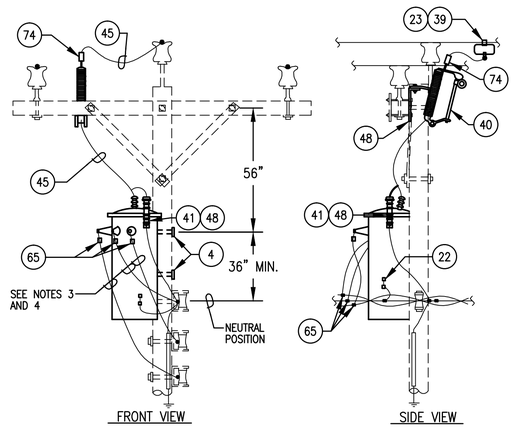

NOTES

1. DRAWING REPRESENTS TF-CL. OMIT ITEM (74) FOR SYMBOL TF.
2. MODIFY CONNECTIONS AS REQUIRED TO ACCOMODATE TRANSFORMERS WITH PRIMARY BUSHING ARRANGEMENTS OTHER THAN SHOWN.
3. WHEN TRANSFORMER PROVIDES UNDERGROUND SERVICE, SIZE SECONDARY OR SERVICE CONDUCTORS AS INDICATED.
4. WHEN TRANSFORMER SECONDARY LEADS CONNECT TO OPEN WIRE OR TRIPLEX SECONDARY, CONDUCTOR SHALL HAVE 600 VOLT INSULATION RATING AND MINIMUM AMPACITY OF 125% OF TRANSFORMER FULL LOAD SECONDARY CURRENT.

TF-CL, TF (0-15KV)

SKETCH DATE	JUNE 2002	STYLE	OH-26

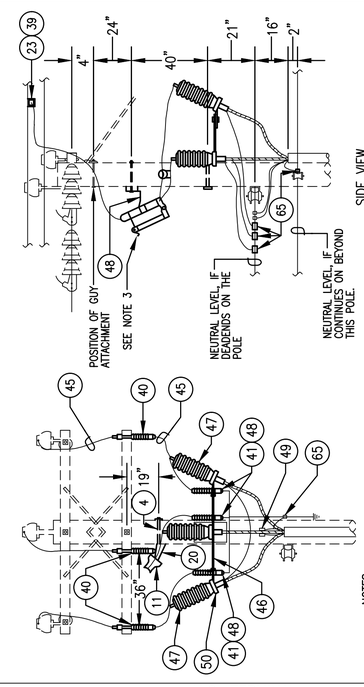

NOTES

1. MODIFY POSITION OF TERMINAL ON DEADENDS TO BE UNDER THE CONDUCTORS AND THE CUTOUTS ON THE BACKSIDE OF CROSSARM. POLE RISER MUST BE OFFSET TO CLEAR NEUTRAL CLEVIS BRACKET.
2. CONNECT BOTTOM LEAD OF ARRESTER DIRECTLY TO POLE GROUND. INTERCONNECT CABLE INSULATION SHIELD DRAIN WIRES AND CONDUIT RISER GROUND TO MULTI-GROUNDED NEUTRAL (IF EXISTING) AND POLE GROUND.
3. CUTOUT PROVIDES A FUSE OR A SOLID BLADE (NON-FUSED) OPTION. COORDINATE WITH SPECIFIC DESIGN REQUIREMENTS PROVIDED.

U.G. TERMINAL
(0-25KV)

SKETCH DATE	JUNE 2002	STYLE	OH-31

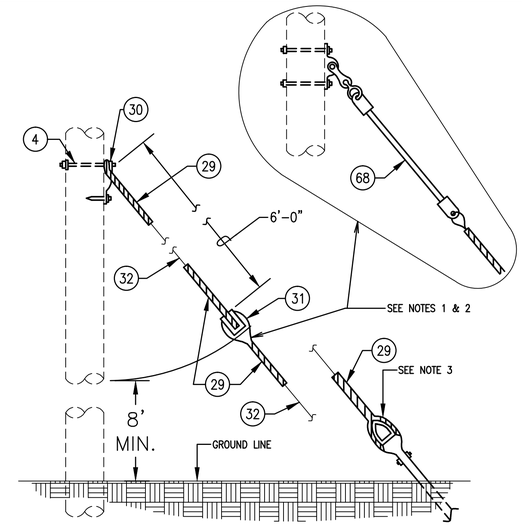

NOTES

1. DRAWING REPRESENTS SYMBOL FOR "GUY-I". OMIT ITEM (31) FOR THE "GUY" SYMBOL.
2. COORDINATE INSTALLATION WITH ANCHOR AS SPECIFIED.
3. UTILIZE ITEM (68) WHEN GUYING ATTACHMENT IS LOCATED IN THE PRIMARY AREA OF THE POLE AS INDICATED BY SPECIFIC DESIGN REQUIREMENTS PROVIDED.
4. BOND ALL GUYS (SUPPLY & COMMUNICATION) AND CONNECT TO POLE GROUND AND SYSTEM NEUTRAL (IF EXISTING).
5. SEE DRAWING ES603 FOR POLE/GUY LOCATIONS.

GUY-I
GUY

SKETCH DATE	JUNE 2002	STYLE	OH-32

SYM	DESCRIPTION	DATE	APPR

NAVFAC

COMMONWEALTH OF VIRGINIA
JAMES WALTER PFEFFERKORN JR.
Lic. No.018432
10 JUNE 2014
PROFESSIONAL ENGINEER
SEAL

ADVANCED ENGINEERING CONSULTANTS
Electrical - Mechanical - Plumbing - Fire Protection
249 CENTRAL PARK AVE
SUITE 330
VIRGINIA BEACH, VA 23462
Phone: 757.502.8882
Fax: 614.486.4082
A/E INFO

APPROVED
FOR COMMANDER NAVFAC / B.L.T.L.
ACTIVITY
SATISFACTORY TO DATE

DES	KC	DRW JPW	CHK JWP
PM	XXX		
BRANCH MANAGER	KDL ~~XXX~~		
CHIEF ENG/ARCH	TZO XXX		
FIRE PROTECTION	LRP XXX		

DEPARTMENT OF THE NAVY
NAVAL FACILITIES ENGINEERING COMMAND ~ MID-ATLANTIC
HAMPTON ROADS IPT
NAVAL WEAPONS STATION YORKTOWN, VIRGINIA
NAVAL FACILITIES ENGINEERING COMMAND
P-984 REGIMENTAL HEADQUARTERS
DETAILS - ELECTRICAL SITE

SCALE:	AS NOTED
EPROJECT NO.:	1113910
CONSTR. CONTR. NO.	N40085-13-C-4507
NAVFAC DRAWING NO.	12664848
SHEET	OF

ES500

DRAWFORM REVISION: 7 AUGUST 2009

FILE NAME: V:\2013 proj\13-230-01 P984 DB HQ AND P985 DB BEQ\CAD\CAD Sheets - P984 Headquarters\1113910X-ES500 Details.dwg LAYOUT NAME: Layout1 PLOTTED: Monday, June 09, 2014 - 2:31pm USER: AEC47

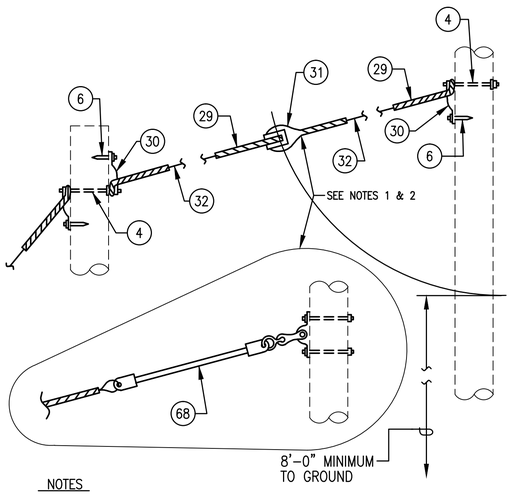

NOTES

1. DRAWING REPRESENTS SYMBOL FOR "SPAN-GUY-I". OMIT ITEM (31) FOR THE "SPAN GUY" SYMBOL.
2. ON CIRCUIT OPERATING VOLTAGES GREATER THAN 15KV, SUBSTITUTE (68) FOR (31).
3. UTILIZE ITEM (68) WHEN GUYING ATTACHMENT IS LOCATED IN THE PRIMARY AREA OF THE POLE AS INDICATED BY SPECIFIC DESIGN REQUIREMENTS PROVIDED.
4. SEE DRAWING ES603 FOR POLE/GUY LOCATIONS.

SPAN GUY-I
SPAN GUY

SKETCH DATE	JUNE 2002	STYLE	OH-33

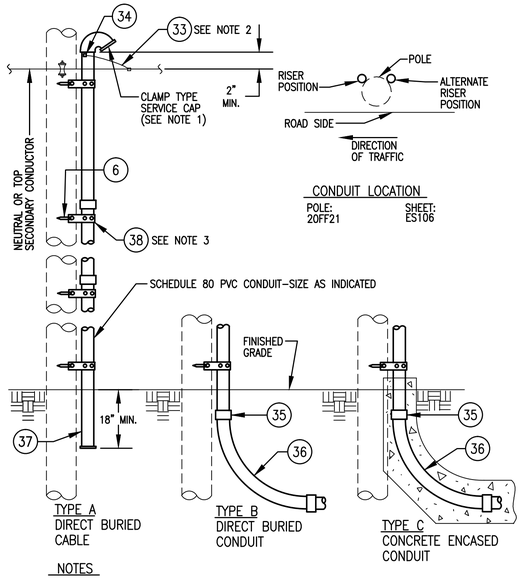

NOTES

1. ON CONDUIT RISER FOR PRIMARY CIRCUITS, ELIMINATE SERVICE CAP AND PROVIDE GROUNDING TYPE INSULATING BUSHING.
2. BOND CONDUIT TO POLE GROUND AND SYSTEM NEUTRAL (IF EXISTING). SEE GROUNDING NOTES ON SKETCH OH-41.
3. SPACE STRAPS AT MAXIMUM OF 4' INTERVALS.

CONDUIT RISER
(SIZE & TYPE AS INDICATED)

SKETCH DATE	JUNE 2002	STYLE	OH-35

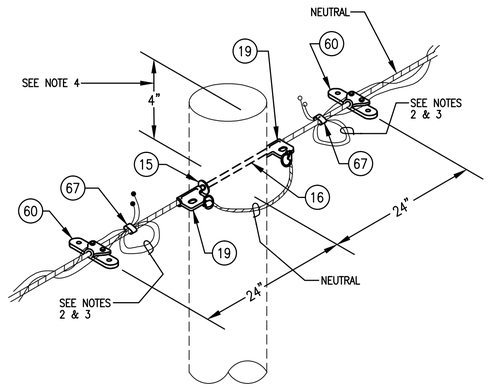

NOTES

1. DRAWING REPRESENTS A STDDE OR SQDDE. OMIT ONE EACH OF ITEMS (19) (60) AND (67) FOR USE WITH STDE OR SQDE.
2. CABLE MAY EXTEND ON THROUGH WITHOUT BEING CUT, WHEN REQUIRED.
3. COIL CONDUCTORS SO THEY WILL BE LONG ENOUGH TO BE JOINED AND SPLICED TOGETHER.
4. WHEN USED AT TOP OF POLE, INSTALL MACHINE BOLT 4" DOWN FROM TOP OF POLE.

STDDE, SQDDE, STDE, SQDE
(0-600V)

SKETCH DATE	JUNE 2002	STYLE	OH-40

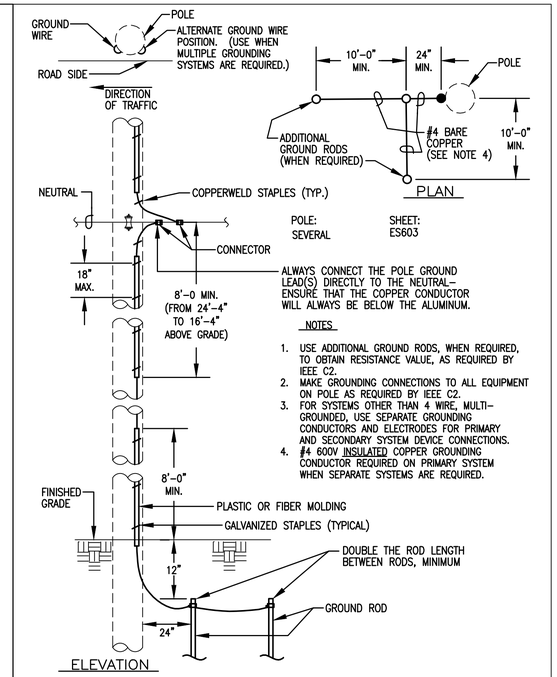

ALWAYS CONNECT THE POLE GROUND LEAD(S) DIRECTLY TO THE NEUTRAL—ENSURE THAT THE COPPER CONDUCTOR WILL ALWAYS BE BELOW THE ALUMINUM.

NOTES

1. USE ADDITIONAL GROUND RODS, WHEN REQUIRED, TO OBTAIN RESISTANCE VALUE, AS REQUIRED BY IEEE C2.
2. MAKE GROUNDING CONNECTIONS TO ALL EQUIPMENT ON POLE AS REQUIRED BY IEEE C2.
3. FOR SYSTEMS OTHER THAN 4 WIRE, MULTI-GROUNDED, USE SEPARATE GROUNDING CONDUCTORS AND ELECTRODES FOR PRIMARY AND SECONDARY SYSTEM DEVICE CONNECTIONS.
4. #4 600V INSULATED COPPER GROUNDING CONDUCTOR REQUIRED ON PRIMARY SYSTEM WHEN SEPARATE SYSTEMS ARE REQUIRED.

GROUND

SKETCH DATE	JUNE 2002	STYLE	OH-41

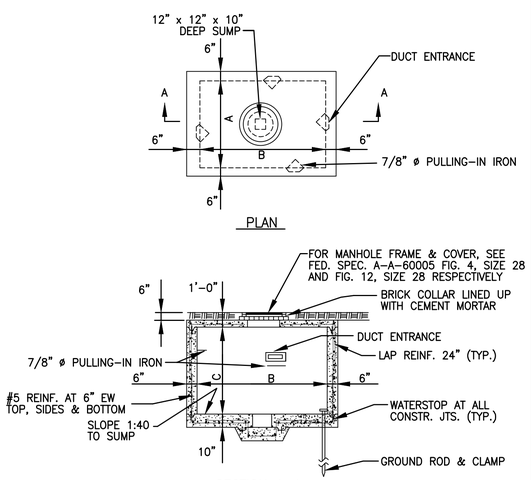

MANHOLE DIMENSIONS			
TYPE	A	B	C (AT HIGH PT.)
1	6'-0"	6'-0"	6'-6"

NOTES:

1. FOR DETAILS OF CABLE RACKS, DUCT ENTRANCE AND PULLING-IN IRONS, SEE PLATE UG-7.
2. MINIMUM CONCRETE COMPRESSIVE STRENGTH SHALL BE 3000 PSI.

STANDARD ELECTRICAL MANHOLE (NONTRAFFIC)
TYPE 1

SKETCH DATE	JUNE 2002	STYLE	UG-1

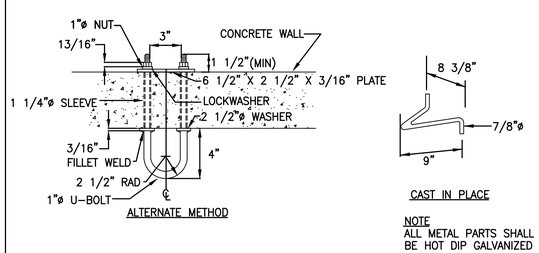

NOTE
ALL METAL PARTS SHALL BE HOT DIP GALVANIZED

DETAIL OF PULLING-IN IRON

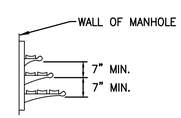

TYPICAL CABLE RACK

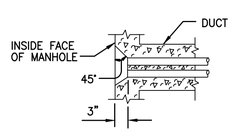

TYPICAL DUCT ENTRANCE

DETAILS
(PULLING-IN IRONS, CABLE RACK AND DUCT ENTRANCE)

SKETCH DATE	JUNE 2002	STYLE	UG-7

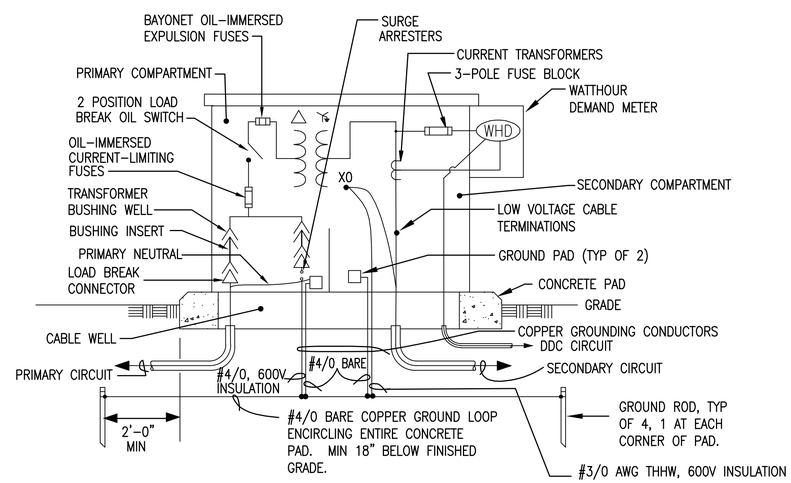

PAD-MOUNTED TRANSFORMER T1 DETAIL

NOT TO SCALE

SYM	DESCRIPTION	DATE	APPR

NAVFAC

COMMONWEALTH OF VIRGINIA
JAMES WALTER PFEFFERKORN JR.
Lic. No.018432
10 JUNE 2014
PROFESSIONAL ENGINEER
SEAL

ADVANCED ENGINEERING CONSULTANTS
Electrical - Mechanical - Plumbing - Fire Protection
249 CENTRAL PARK AVE
SUITE 330
VIRGINIA BEACH, VA 23462
Phone: 757.502.8882
Fax: 614.486.4082

A/E INFO

APPROVED
FOR COMMANDER NAVFAC / B.L.T.L.
ACTIVITY
SATISFACTORY TO DATE

DES	KC	DRW	JPW	CHK	JWP
PM	XXX				
BRANCH MANAGER	KDL ~~XXX~~				
CHIEF ENG/ARCH	TZ XXX				
FIRE PROTECTION	LRP XXX				

DEPARTMENT OF THE NAVY
NAVAL FACILITIES ENGINEERING COMMAND
HAMPTON ROADS IPT.
NAVAL FACILITIES ENGINEERING COMMAND ~ MID-ATLANTIC
NAVAL STATION - NORFOLK, VIRGINIA
NAVAL WEAPONS STATION
YORKTOWN, VIRGINIA
P-984 REGIMENTAL HEADQUARTERS
DETAILS - ELECTRICAL SITE

SCALE:	AS NOTED
EPROJECT NO.:	1113910
CONSTR. CONTR. NO.	N40085-13-C-4507
NAVFAC DRAWING NO.	12664849
SHEET	OF

ES501

DRAWFORM REVISION: 7 AUGUST 2009

FILE NAME: V:\2013 proj\13-230-01 P984 DB HQ AND P985 DB BEQ\CAD\CAD Sheets - P984 Headquarters\1113910X-ES501 Details.dwg LAYOUT NAME: Layout1 PLOTTED: Monday, June 09, 2014 - 2:31pm USER: AEC47

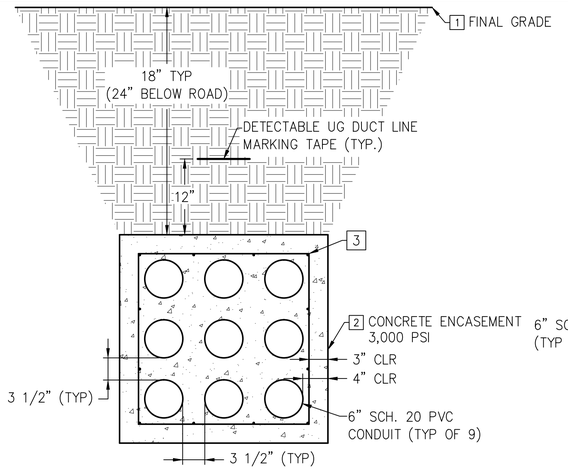

DUCTBANK 'A' - SECTION
NOT TO SCALE TYPICAL C2

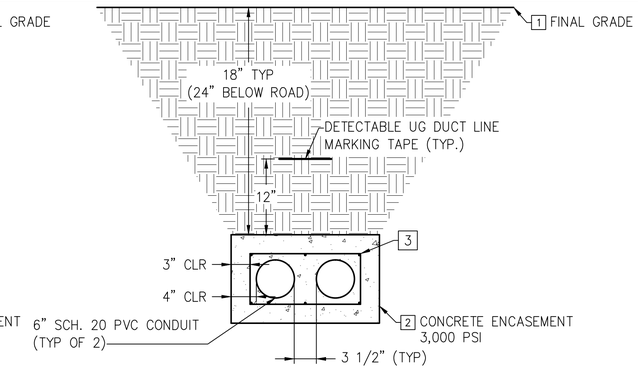

DUCTBANK 'B' - SECTION
NOT TO SCALE TYPICAL C3

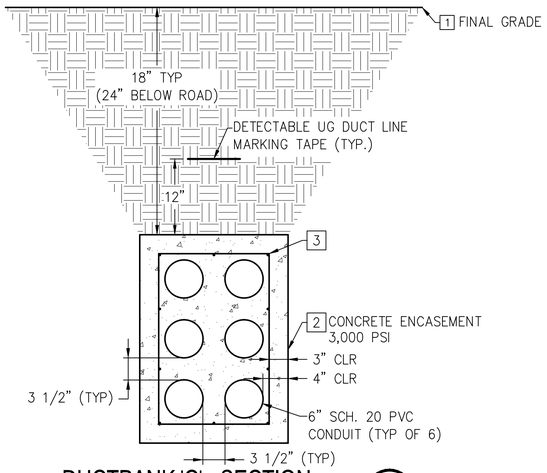

DUCTBANK 'C' - SECTION
NOT TO SCALE TYPICAL C4

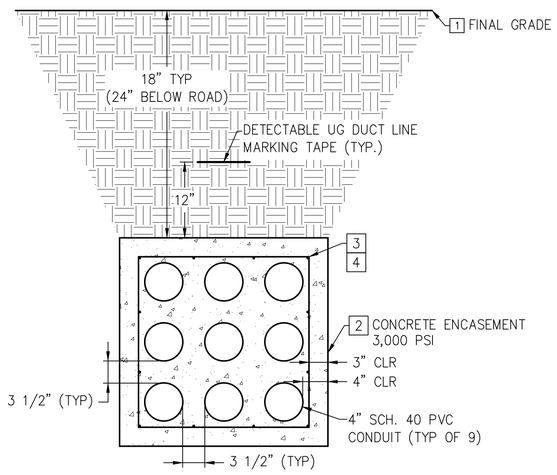

DUCTBANK 'D' - SECTION
NOT TO SCALE TYPICAL B2

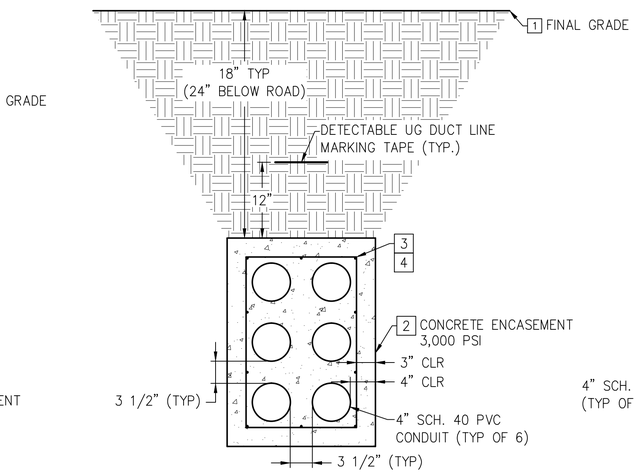

DUCTBANK 'E' - SECTION
NOT TO SCALE TYPICAL B3

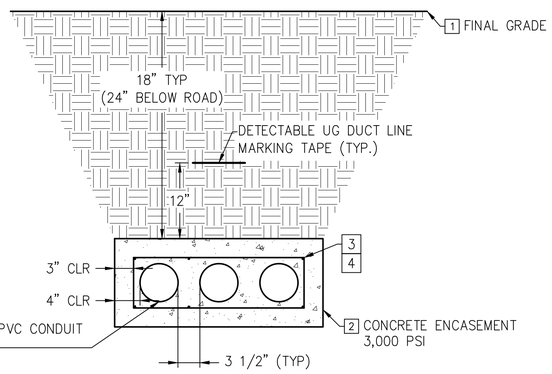

DUCTBANK 'F' - SECTION
NOT TO SCALE TYPICAL B4

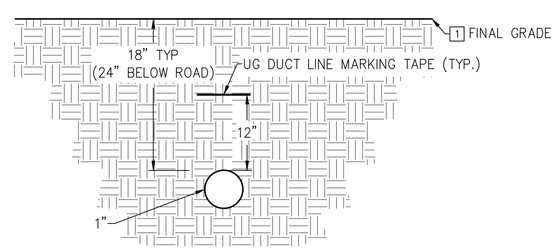

DIRECT BURIED SECTION
NOT TO SCALE TYPICAL A2

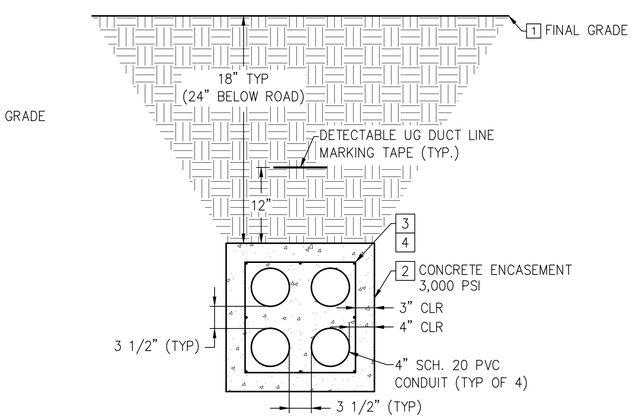

DUCTBANK 'G' - SECTION
NOT TO SCALE TYPICAL A3

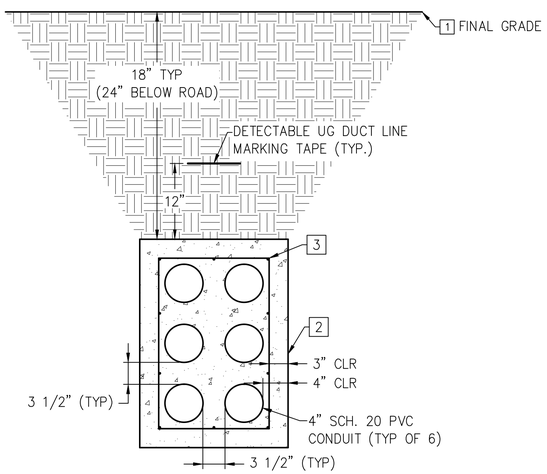

DUCTBANK 'H' - SECTION
NOT TO SCALE TYPICAL A4

KEY NOTES:

GENERAL NOTES:

A. COORDINATE CROSSINGS OF POWER, LIGHTING AND COMMUNICATIONS BURIAL SO THAT TRENCH DEPTHS DO NOT CONFLICT.
B. DETAILS SHOWING REBAR REQUIREMENTS ARE FOR SECTIONS OF DUCTBANK LOCATED UNDER ROADWAYS AND AT COLD JOINTS. PER UFGS 33 71 02; REBAR IS NOT OTHERWISE REQUIRED.
C. SCHEDULE 20 PVC CONDUIT PERMITTED FOR CONCRETE ENCASED DUCTBANKS; SCHEDULE 40 PVC CONDUIT REQUIRED FOR DUCTBANKS NOT ENCASED IN CONCRETE.

☐ NEW WORK NOTES:

1. "FINAL GRADE" SHALL BE UNDERSTOOD TO REFER TO THE "FINAL EARTHEN GRADE", "TOP OF PAVEMENT SURFACE" OR "TOP OF APRON SLAB", WHICHEVER IS PRESENT. RESTORE SURFACES DISTURBED BY CONSTRUCTION ACTIVITIES TO ORIGINAL CONDITION IN ACCORDANCE WITH THE REQUIREMENTS OF THE CONTRACT GOVERNING SURFACE RESTORATION.
2. PROVIDE A MINIMUM OF FOUR (4) LOCKABLE PLASTIC DUCT SPACERS PER EACH 20 FT. SECTION OF CONDUIT (5 FT. ON CENTER). INCLUDE HOLD DOWN EQUIPMENT AS RECOMMENDED BY THE DUCT SPACER MANUFACTURER TO AVOID DUCTBANK FLOATATION DURING THE CONCRETE POUR.
3. USE MINIMUM REINFORCEMENT OF (4) #4 WITH #3 TIES AT 3'-0" ON CENTER FOR DUCTWORKS 30" (OR LESS) WIDE. USE MINIMUM REINFORCEMENT OF (6) #4 WITH #3 TIES AT 3'-0" ON CENTER FOR DUCTBANKS GREATER THAN 30" WIDE.
4. FOR TELECOMMUNICATIONS DUCTBANKS, CONCRETE ENCASEMENT IS REQUIRED ONLY TO A DISTANCE FROM THE BUILDING OUT FIVE (5) FEET AND WHERE THE DUCTBANK CROSSES UNDER ROADWAYS AND DRIVES. CONCRETE ENCASEMENT SHALL EXTEND ONE (1) FOOT BEYOND THE EDGES OF ROADWAYS AND DRIVES WHEN CROSSES DO OCCUR.

SYM	DESCRIPTION	DATE	APPR

NAVFAC

COMMONWEALTH OF VIRGINIA
JAMES WALTER PFEFFERKORN JR.
Lic. No.018432
10 JUNE 2014
PROFESSIONAL ENGINEER
SEAL

ADVANCED ENGINEERING CONSULTANTS
Electrical - Mechanical - Plumbing - Fire Protection
249 CENTRAL PARK AVE
SUITE 330
VIRGINIA BEACH, VA 23462
Phone: 757.502.8882
Fax: 614.486.4082
A/E INFO

APPROVED
FOR COMMANDER NAVFAC / B.L.T.L.
ACTIVITY
SATISFACTORY TO DATE

DES KC DRW JPW CHK JWP
PM XXX
BRANCH MANAGER KDL ~~XXX~~
CHIEF ENG/ARCH TLO XXX
FIRE PROTECTION LRP XXX

DEPARTMENT OF THE NAVY
NAVAL FACILITIES ENGINEERING COMMAND
NAVAL FACILITIES ENGINEERING COMMAND ~ MID-ATLANTIC
HAMPTON ROADS IPT NAVAL STATION ~ NORFOLK, VIRGINIA
NAVAL WEAPONS STATION YORKTOWN, VIRGINIA
P-984 REGIMENTAL HEADQUARTERS
DETAILS - ELECTRICAL SITE

SCALE: AS NOTED
EPROJECT NO.: 1113910
CONSTR. CONTR. NO. N40085-13-C-4507
NAVFAC DRAWING NO. 12664850
SHEET OF
ES502

DRAWFORM REVISION: 7 AUGUST 2009

FILE NAME: V:\2013 proj\13-230-01 P984 DB HQ AND P985 DB BEQ\CAD\CAD Sheets - P984 Headquarters\1113910X-ES502 Details.dwg LAYOUT NAME: Layout1 PLOTTED: Monday, June 09, 2014 - 2:31pm USER: AEC47

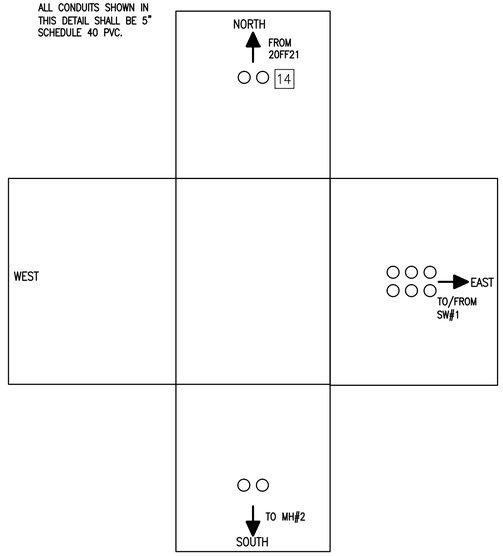

MANHOLE #1 – SHEET ES106; TYPE 1

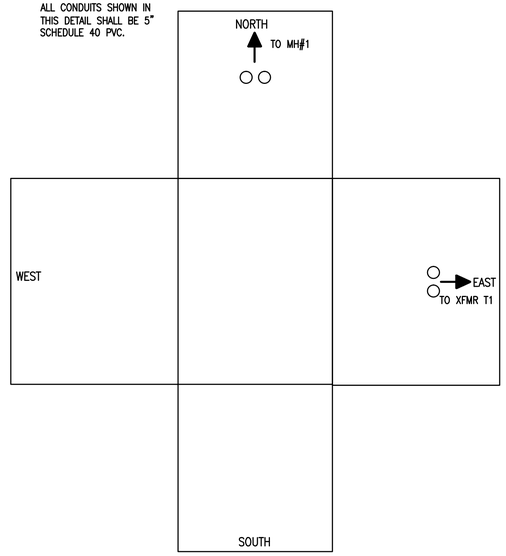

MANHOLE #2 – SHEET ES106; TYPE 1

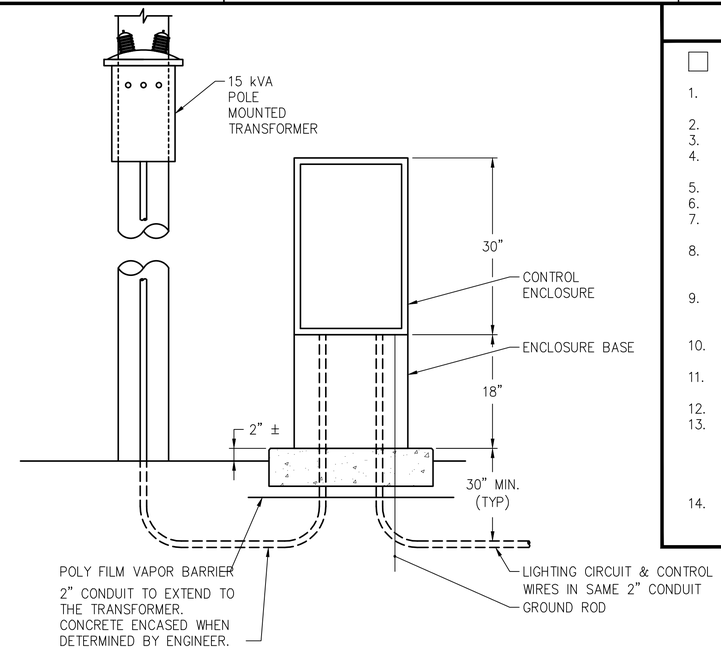

LIGHTING LOAD CENTER DETAIL

NOT TO SCALE — TYPICAL C4

KEY NOTES:

NEW WORK NOTES:

1. CABLE RACK (TYP) ATTACHED TO S OR L CABLE RACK SUPPORT.
2. CABLE RACK SUPPORT (TYP).
3. 14" CABLE HOOK (TYP).
4. 4" PVC CONDUIT, EXCEPT AS OTHERWISE NOTED ON PLANS, AND DUCT PLUG (TYP).
5. PULLING–IN IRON (TYP).
6. SUMP (TYP).
7. 3/4" x 10" COPPER CLAD IRON GROUND ROD WITH 4" STUB. (TYP)
8. BONDING RIBBON CONNECT INSULATED 6 AWG WIRE WITH GROUNDING CLAMP. ALL RACKS SHALL BE BONDED TO GROUND ROD.
9. THE DUCTS SHOULD ENTER THE MANHOLE USING THE LOWER DUCT TERMINATORS TO SIMPLIFY FUTURE CONDUIT ADDITIONS.
10. THE LARGEST DIAMETER COPPER CABLE SHALL BE PLACED IN THE LOWEST VACANT DUCT.
11. SUB–DUCT, INNER DUCT AND FIBER OPTIC CABLES SHOULD BE PLACED IN THE UPPER EMPTY DUCT.
12. CABLE RACK (TYP) ATTACHED DIRECTLY TO WALL.
13. QUANTITY OF RACK ARMS PROVIDED FOR EACH MANHOLE PROVIDED SHALL BE TOTAL REQUIRED TO SUPPORT CIRCUITS DESIGNED FOR THAT MANHOLE PLUS PROVIDE 30% (THIRTY PERCENT) SPARE CAPACITY FOR FUTURE USE.
14. INSTALL SPARE CONDUIT WITH PULL WIRE FROM POLE 20FF21 TO MH1; CAP CONDUIT AT 6" AFG BESIDE POLE.

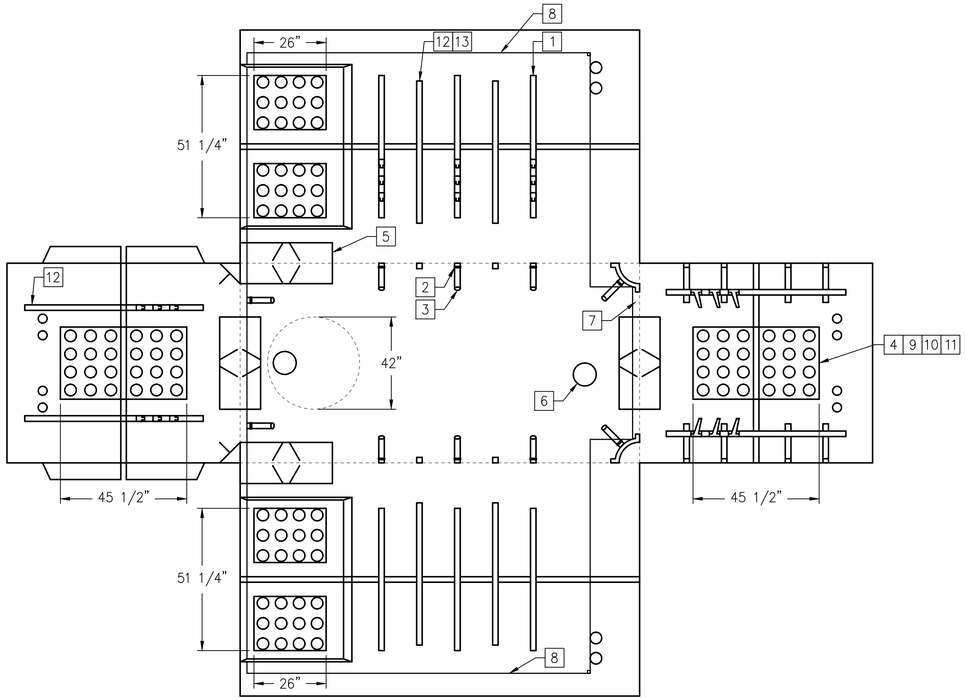

TELECOMMUNICATIONS MANHOLE DETAIL

NOT TO SCALE — TYPICAL A2

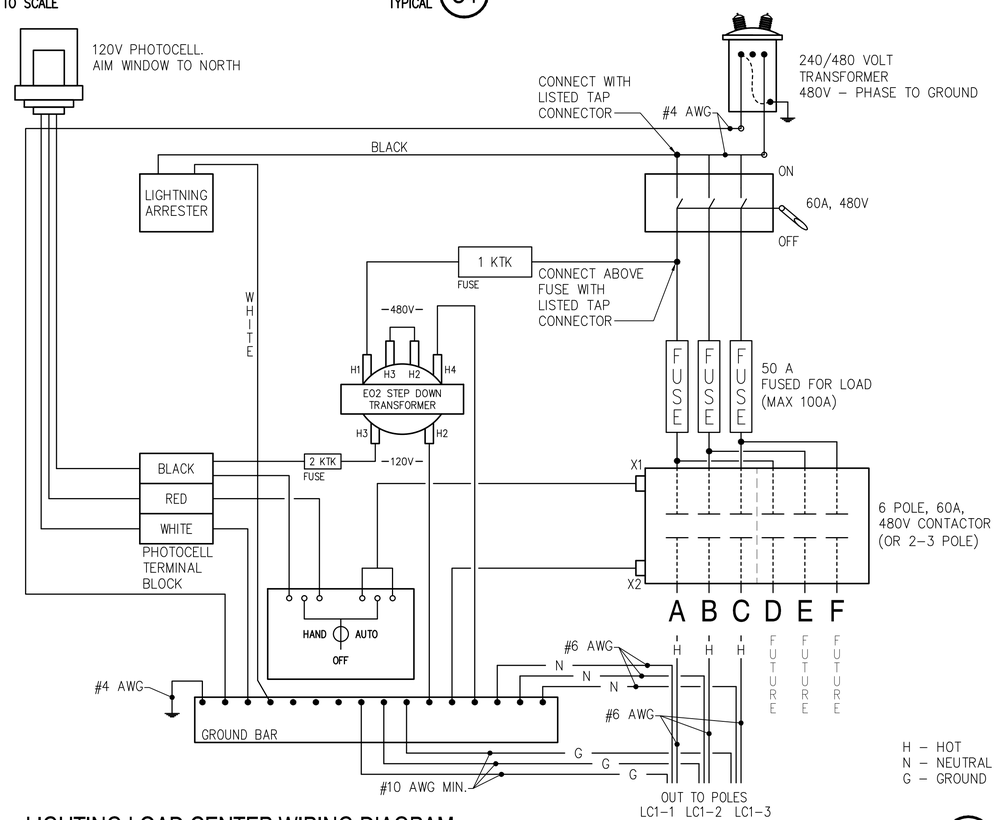

LIGHTING LOAD CENTER WIRING DIAGRAM

NOT TO SCALE — TYPICAL A5

SYM	DESCRIPTION	DATE	APPR

NAVFAC

COMMONWEALTH OF VIRGINIA
JAMES WALTER PFEFFERKORN JR.
Lic. No.018432
10 JUNE 2014
PROFESSIONAL ENGINEER
SEAL

ADVANCED ENGINEERING CONSULTANTS
Electrical · Mechanical · Plumbing · Fire Protection
249 CENTRAL PARK AVE
SUITE 330
VIRGINIA BEACH, VA 23462
Phone: 757.502.8882
Fax: 614.486.4082
A/E INFO

APPROVED
FOR COMMANDER NAVFAC / B.L.T.L.
ACTIVITY
SATISFACTORY TO DATE

DES	KC	DRW JPW	CHK JWP
PM	XXX		
BRANCH MANAGER	KDL ~~XXX~~		
CHIEF ENG/ARCH	TLO XXX		
FIRE PROTECTION	LRP XXX		

DEPARTMENT OF THE NAVY
NAVAL FACILITIES ENGINEERING COMMAND
HAMPTON ROADS PT.
NAVAL FACILITIES ENGINEERING COMMAND ~ MID-ATLANTIC
NAVAL STATION – NORFOLK, VIRGINIA
NAVAL WEAPONS STATION
YORKTOWN, VIRGINIA
P-984 REGIMENTAL HEADQUARTERS
DETAILS – ELECTRICAL SITE

SCALE:	AS NOTED
EPROJECT NO.:	1113910
CONSTR. CONTR. NO.	N40085–13–C–4507
NAVFAC DRAWING NO.	12664851
SHEET	OF

ES503

DRAWFORM REVISION: 7 AUGUST 2009

FILE NAME: V:\2013 proj\13-330-01 P984 DB HQ AND P985 DB BEQ\CAD\CAD Sheets - P984 Headquarters\1113910X-ES503 Details.dwg LAYOUT NAME: Layout1 PLOTTED: Monday, June 09, 2014 - 2:31pm USER: AEC47

NOTES:
1. PROVIDE STANDARD HANDHOLE. COVER COLOR SHALL BE AS SPECIFIED.
2. PROVIDE 1" x 3/8" BELL PULL SLOT FOR EACH HANDHOLE.
3. COVER, RING AND BOX SHALL BE MADE OF SAME MATERIAL.
4. PROVIDE IMPRINTED LOGO TO MATCH.

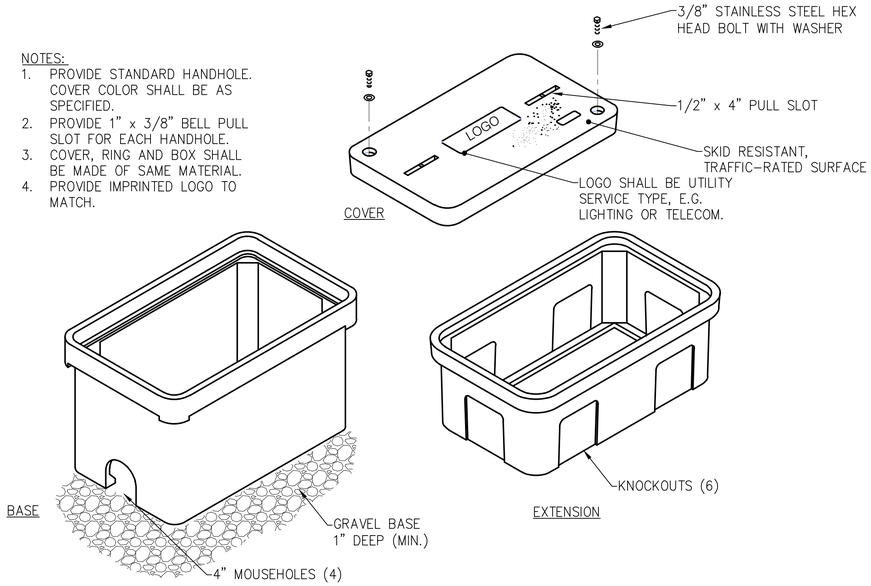

TYPICAL HANDHOLE DETAIL (C2)
NOT TO SCALE — TYPICAL

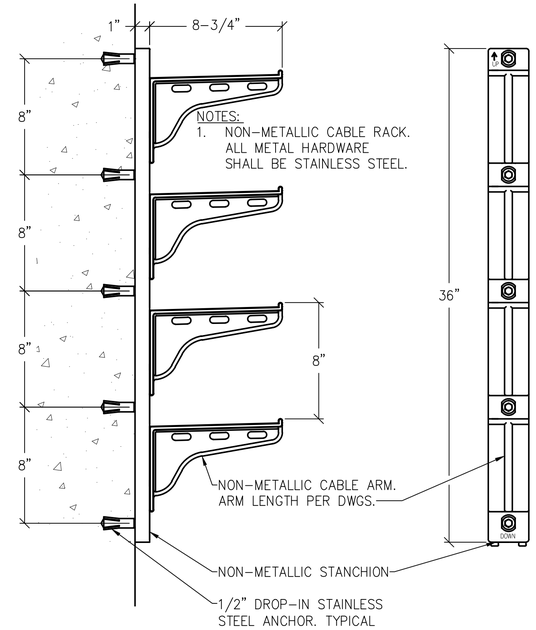

MANHOLE CABLE RACK DETAIL (C4)
NOT TO SCALE — TYPICAL

NOTES:
1. CONCRETE MINIMUM STRENGTH – 34.5 MPa (5,000 PSI) @ 28 DAYS.
2. 225mm (8-3/4") LONG NONMETALLIC ARM. SEE MANHOLE CABLE RACK DETAIL.
3. CONSTRUCTION JOINT SHALL BE SEALED WITH 25mm (1") BUTYL RUBBER SEALANT.

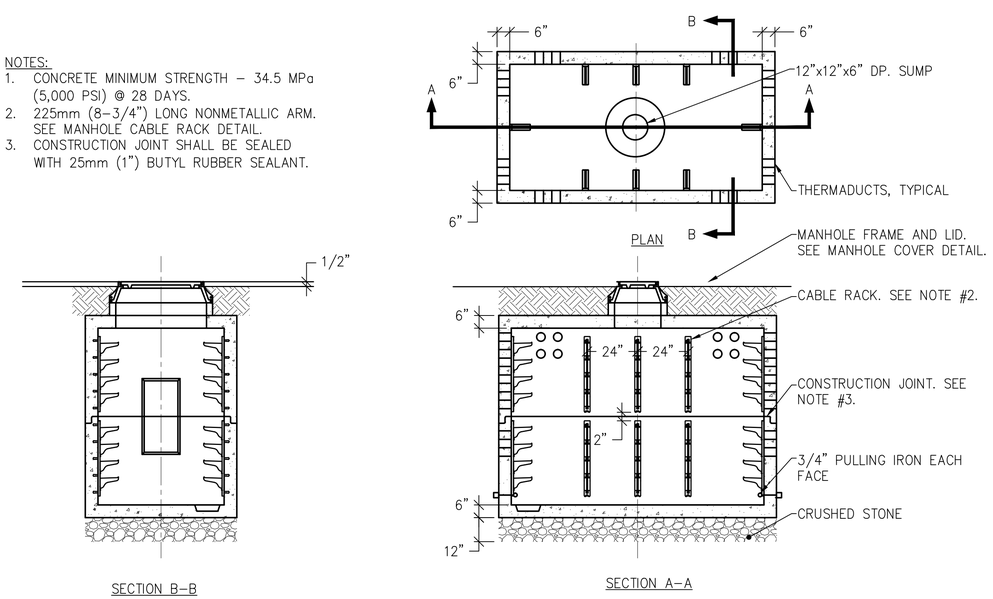

TYPICAL COMMUNICATIONS MANHOLE DETAIL (A2)
NOT TO SCALE — TYPICAL

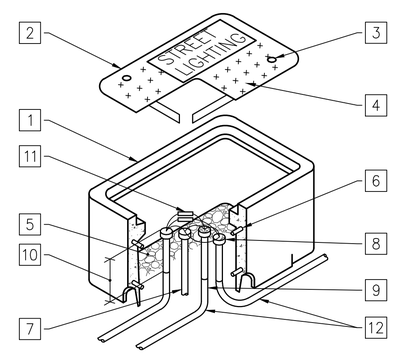

SITE LIGHTING HANDHOLE (A4)
NOT TO SCALE — TYPICAL

KEY NOTES:

NEW WORK NOTES:

1. PRECAST CONC. JUNCTION BOX. SET TOP FLUSH WITH TOP OF FINISHED GRADE, 14 1/4"x20" MIN. OUTSIDE DIMENSIONS.
2. STEEL PLATE, TRAFFIC RATED, BOLT-DOWN. COVER.
3. HOLD DOWN BOLT (2) REQUIRED (TYPICAL).
4. 1" HIGH LETTERING, PERMANENTLY STAMPED ON COVER.
5. PROVIDE 6" GRAVEL FILL BELOW BOTTOM OF BOX FOR DRAINAGE.
6. 9 GA. WELDED WIRE FRAME.
7. 3/4" DIA. X 10'-0" COPPER-CLAD STEEL GROUND ROD.
8. TYPICAL GROUND CONDUCTORS SHALL BE CLAMPED TO GROUND ROD.
9. U.G. PVC CONDUITS TO SITE LIGHTING FIXTURES.
10. 6" ABOVE TOP OF GRAVEL.
11. WATERPROOF 30A FUSE HOLDER ASSEMBLY WITH FUSES.
12. LIGHTING CIRCUIT, SEE SITE PLANS FOR ROUTING.

SYM	DESCRIPTION	DATE	APPR

COMMONWEALTH OF VIRGINIA
JAMES WALTER PFEFFERKORN JR.
Lic. No.018432
10 JUNE 2014
PROFESSIONAL ENGINEER
SEAL

ADVANCED ENGINEERING CONSULTANTS
Electrical · Mechanical · Plumbing · Fire Protection
249 CENTRAL PARK AVE
SUITE 330
VIRGINIA BEACH, VA 23462
Phone: 757.502.8882
Fax: 614.486.4082
A/E INFO

APPROVED
FOR COMMANDER NAVFAC / B.L.T.L.
ACTIVITY
SATISFACTORY TO DATE

DES	KC	DRW JPW	CHK JWP
PM	XXX		
BRANCH MANAGER	KDL ~~XXX~~		
CHIEF ENG/ARCH	TLO XXX		
FIRE PROTECTION	LRP XXX		

DEPARTMENT OF THE NAVY
NAVAL FACILITIES ENGINEERING COMMAND
HAMPTON ROADS DIV.
NAVAL FACILITIES ENGINEERING COMMAND ~ MID-ATLANTIC
NAVAL STATION – NORFOLK, VIRGINIA
NAVAL WEAPONS STATION YORKTOWN, VIRGINIA
P-984 REGIMENTAL HEADQUARTERS
DETAILS – ELECTRICAL SITE

SCALE:	AS NOTED
EPROJECT NO.:	1113910
CONSTR. CONTR. NO.	N40085-13-C-4507
NAVFAC DRAWING NO.	12664852
SHEET	OF

ES504

DRAWFORM REVISION: 7 AUGUST 2009

FILE NAME: V:\2013 proj\13-230-01 P984 DB HQ AND P985 DB BEQ\CAD\CAD Sheets - P984 Headquarters\1113910X-ES504 Details.dwg LAYOUT NAME: Layout1 PLOTTED: Monday, June 09, 2014 - 2:31pm USER: AEC47

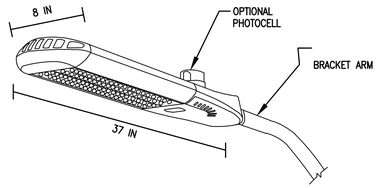

LUMINAIRE REQUIREMENTS:

1. HOUSING – DIE CAST ALUMINUM OR DIE CAST AND EXTRUDED ALUMINUM. HEAT SINK INCORPORATED DIRECTLY INTO HOUSING TO ENSURE MAXIMUM HEAT TRANSFER AND DISSIPATION.
2. FINISH – MULTI-STAGE PRE-TREATMENT, FINISHED WITH BAKED-ON POLYESTER POWDER COAT. FINISH SHALL PASS 2500 HOUR SALT SPRAY TEST PER ASTM B117. FINISH COLORS INCLUDE DARK BRONZE, SILVER, OR BLACK WITH CUSTOM COLORS AVAILABLE.
3. POWER SUPPLY/LED DRIVER – PROVIDE IN SEPARATE COMPARTMENT ACCESSIBLE WITHOUT THE USE OF HAND TOOLS. CLASS 1 DRIVER SHALL OPERATE AT 120/277 V, 50/60 Hz. OTHER VOLTAGES OPTIONAL. POWER FACTOR GREATER THAN 0.9 AND THD LESS THAN 20% AT FULL LOAD. MINIMUM EFFICACY SHALL BE 60 LM/W AT MAXIMUM 600 mA OPERATING CURRENT.
4. LED OPTICAL ASSEMBLY – NUMBER OF LED ARRAYS SHALL VARY TO ACCOMMODATE DESIRED LUMINAIRE OUTPUT. PROVIDE WITH EQUIVALENT NEMA TYPE II, III IV, OR V DISTRIBUTION AS INDICATED. BUG UPLIGHT RATING OF U0, WITH BACKLIGHT AND GLARE RATINGS AS DETERMINED BY LIGHTING ZONE INSTALLED. MINIMUM COLOR RENDERING INDEX (CRI) SHALL BE 70 FOR CORRELATED COLOR TEMPERATURES (CCT) OF 4000 TO 4500 DEGREES K.
5. SURGE PROTECTION – 6 kV MINIMUM, COMPLIANT WITH ANSI C62.41.2.
6. CERTIFICATION – UL AND/OR ETL LISTED, MINIMUM IP65 RATED PER ANSI/IEC 60529, AND RoHS COMPLIANT.
7. OPTIONS – PHOTOCELL AND RECEPTACLE, SHORTING CAP, BIRD SPIKES, AND 0-10 VOLT DIMMING DRIVER.
8. OTHER – THE ABOVE SKETCH IS A NON-PROPRIETARY GRAPHIC REPRESENTATION OF A LUMINAIRE THAT MAY MEET THE SPECIFICATION REQUIREMENTS AND IS NOT INTENDED TO INDICATE A CERTAIN MANUFACTURER'S PREFERENCE. ALL DIMENSIONS ARE NOMINAL AND VARY PER MANUFACTURER.

LED ROADWAY LUMINAIRE

REVISED: MARCH 2013 | LUMINAIRE PLATE: XL-01

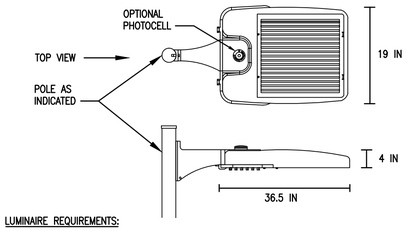

LUMINAIRE REQUIREMENTS:

1. HOUSING – DIE-CAST ALUMINUM OR DIE-CAST AND EXTRUDED ALUMINUM WITH INTEGRAL, SELF-CLEANING HEAT SINK FINS, RIBS, OR EQUIVALENT PASSIVE COOLING MECHANISM. HEAT SINK SHALL BE INCORPORATED DIRECTLY INTO HOUSING TO ENSURE MAXIMUM HEAT TRANSFER AND DISSIPATION.
2. FINISH – MULTI-STAGE PRE-TREATMENT, FINISHED WITH BAKED-ON POLYESTER POWDER COAT. FINISH SHALL PASS 2500 HOUR SALT SPRAY TEST PER ASTM B117. FINISH COLORS INCLUDE DARK BRONZE, SILVER, OR BLACK WITH CUSTOM COLORS AVAILABLE.
3. POWER SUPPLY/LED DRIVER – PROVIDE IN SEPARATE COMPARTMENT ACCESSIBLE WITHOUT THE USE OF HAND TOOLS. CLASS 1 DRIVER SHALL OPERATE AT 120/277V, 50/60 HZ; OTHER VOLTAGES OPTIONAL. POWER FACTOR GREATER THAN 0.9 AND THD LESS THAN 20% AT FULL LOAD. MINIMUM EFFICACY SHALL BE 60 LM/W AT MAXIMUM 600 mA OPERATING CURRENT.
4. LED OPTICAL ASSEMBLY – NUMBER OF LED ARRAYS SHALL VARY TO ACCOMMODATE DESIRED LUMINAIRE OUTPUT. PROVIDE WITH EQUIVALENT NEMA TYPE III, IV OR V DISTRIBUTION AS INDICATED. BUG UPLIGHT RATING OF U0, WITH BACKLIGHT AND GLARE RATINGS AS DETERMINED BY LIGHTING ZONE INSTALLED. MINIMUM COLOR RENDERING INDEX (CRI) SHALL BE 70 FOR CORRELATED COLOR TEMPERATURE (CCT) OF 4000 K TO 4500 DEGREES K.
5. SURGE PROTECTION – 6 kV MINIMUM, COMPLIANT WITH ANSI C62.41.2.
6. CERTIFICATION – UL AND/OR ETL LISTED, MINIMUM IP65 RATED PER ANSI/IEC 60529, AND RoHS COMPLIANT.
7. OPTIONS – PHOTOCELL AND RECEPTACLE, SHORTING CAP, BIRD SPIKES, AND 0-10 VOLT DIMMING DRIVER.
8. OTHER – THE ABOVE SKETCH IS A NON-PROPRIETARY GRAPHIC REPRESENTATION OF A LUMINAIRE THAT MAY MEET THE SPECIFICATION REQUIREMENTS AND IS NOT INTENDED TO INDICATE A CERTAIN MANUFACTURER'S PREFERENCE. ALL DIMENSIONS ARE NOMINAL AND VARY PER MANUFACTURER.

LED AREA LUMINAIRE

REVISED: MARCH 2013 | LUMINAIRE PLATE: XL-03

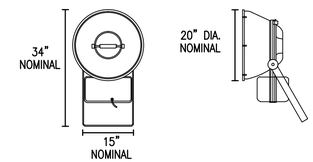

LUMINAIRE REQUIREMENTS:

1. BALLAST HOUSING – DIE-CAST ALUMINUM WITH MULTI-STAGE PRE-TREATMENT, FINISHED WITH BAKED-ON POLYESTER POWDER COAT.
2. REFLECTOR – ANODIZED, SPUN ALUMINUM WITH OPTIONAL STEEL, PAINTED SHROUD FOR LOWER HEIGHT APPLICATIONS. PROVIDE STAINLESS STEEL LENS RING AND LATCHES. REFLECTOR SHALL PRODUCE NEMA 2, 3, 4, 5, OR 6 TYPE BEAM DISTRIBUTION AS INDICATED.
3. LENS – CLEAR, TEMPERED GLASS WITH ONE-PIECE SILICONE GASKET.
4. MOUNTING – GALVANIZED STEEL MOUNTING TRUNNION. PROVIDE FIXTURE AIMING DEVICE FOR VERTICAL AND HORIZONTAL ADJUSTMENTS.
5. LAMP SOCKET – INTEGRAL, PRE-WIRED PORCELAIN LAMP SOCKET WITH NICKEL-PLATED SCREW AND CENTER CONTACT OR DOUBLE-ENDED SOCKET FOR USE WITH DOUBLE-ENDED METAL HALIDE LAMPS AS INDICATED.
6. LAMPS – METAL HALIDE OR HIGH PRESSURE SODIUM WITH WATTAGES AS INDICATED. SEE LIGHTING FIXTURE SCHEDULE.
7. PROVIDE 16/3, PRE-WIRED, WEATHERPROOF SO CORD IN LENGTH AS INDICATED.
8. BALLAST – PREWIRED, ENCASED AND POTTED (ENCAPSULATED), CONSTANT-WATTAGE AUTOTRANSFORMER, HIGH POWER FACTOR (≥ .90), CORE AND COIL TYPE. PROVIDE PULSE-START TYPE FOR USE WITH MH LAMPS; MULTI-TAP WHERE INDICATED.
9. CERTIFICATION – UL LISTED AND CERTIFIED FOR WET LOCATIONS.
10. OPTIONS – SPILL/GLARE CONTROL (INTERNAL LOUVER OR EXTERNAL VISOR) AND FUSING.

SPORTS LIGHTING FLOOD LIGHT

REVISED: AUGUST 2004 | LIGHTING PLATE: XL-4

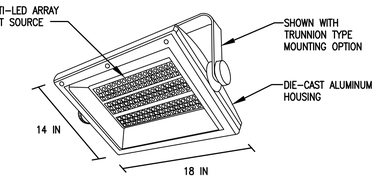

LUMINAIRE REQUIREMENTS:

1. HOUSING – DIE CAST ALUMINUM WITH INTEGRAL PASSIVE COOLING MECHANISM. HEAT SINK SHALL BE INCORPORATED DIRECTLY INTO HOUSING TO ENSURE MAXIMUM HEAT TRANSFER AND DISSIPATION.
2. FINISH – MULTI-STAGE PRE-TREATMENT, FINISHED WITH BAKED-ON POLYESTER POWDER COAT. FINISH SHALL PASS 2500 HOUR SALT SPRAY TEST PER ASTM B117. DARK BRONZE FINISH COLOR IS STANDARD.
3. POWER SUPPLY/LED DRIVER – CLASS 1 ELECTRONIC DRIVER SHALL OPERATE AT 120/277 VOLTS, 50/60 HZ, WITH OTHER VOLTAGES OPTIONAL. POWER FACTOR SHALL BE GREATER THAN 0.9 AND THD LESS THAN 20% AT FULL LOAD. MINIMUM EFFICACY SHALL BE 60 LM/W AT MAXIMUM 600mA OPERATING CURRENT.
4. LED OPTICAL ASSEMBLY – MULTI-LED ARRAY OPTIMIZED FOR SPECIFIC DISTRIBUTION PATTERN AS INDICATED. MINIMUM COLOR RENDERING INDEX (CRI) OF 70 FOR CORRELEATED COLOR TEMPERATURE OF 4000-4500 DEGREES K.
5. LENS – TEMPERED GLASS IN DIE-CAST ALUMINUM FRAME WITH SILICONE GASKET.
6. SURGE PROTECTION – 6 kV MINIMUM, COMPLIANT WITH ANSI C62.41.2.
7. CERTIFICATION – UL AND/OR ETL LISTED FOR WET LOCATIONS AND 2G VIBRATION STANDARD PER ANSI C136.32. OPTICAL ASSEMBLY SHALL BE MINIMUM IP65 PER ANSI/IEC 60529.
8. OPTIONS – PHOTOCELL, FINISH COLOR, OUTPUT DISTRIBUTION TYPE AND TRUNNION OR SLIPFITTER TYPE MOUNTING.
9. OTHER – THE ABOVE SKETCH IS A NON-PROPRIETARY GRAPHIC REPRESENTATION OF A LUMINAIRE THAT MAY MEET THE SPECIFICATION REQUIREMENTS AND IS NOT INTENDED TO INDICATE A CERTAIN MANUFACTURER'S PREFERENCE. ALL DIMENSIONS ARE NOMINAL AND VARY PER MANUFACTURER.

LED FLOOD LUMINAIRE

REVISED: MARCH 2013 | LUMINAIRE PLATE: XL-21

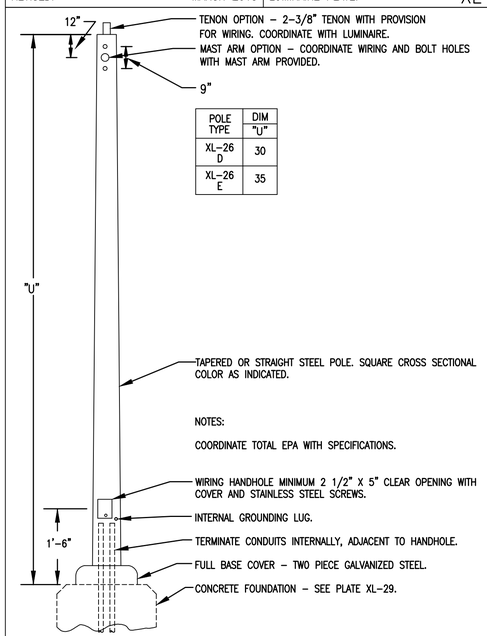

POLE TYPE	DIM "U"
XL-26 D	30
XL-26 E	35

NOTES:

COORDINATE TOTAL EPA WITH SPECIFICATIONS.

ANCHOR BASE STEEL/ALUMINUM POLE

REVISED: MARCH 2013 | LUMINAIRE PLATE: XL-27

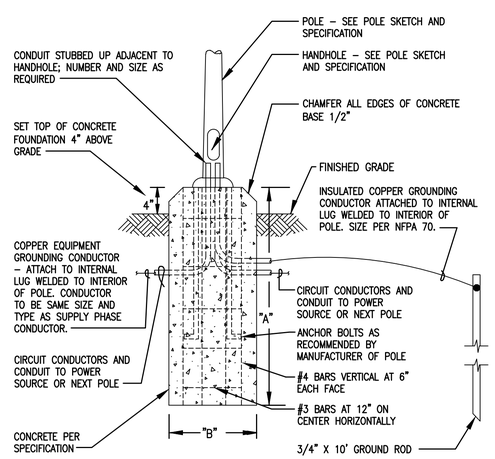

POLE HEIGHT	A	B
21'-30'	72"	24"
31'-40'	78"	30"

ANCHOR BASE POLE FOUNDATION

REVISED: MARCH 2013 | LUMINAIRE PLATE: XL-29

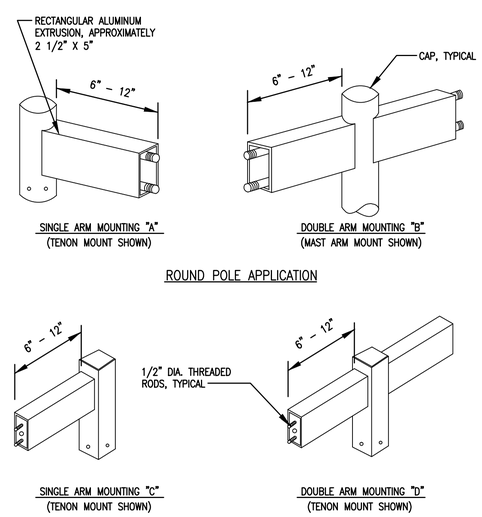

NOTES: 1. ALL FASTENERS SHALL BE CONCEALED.

2. ALL ARMS ARE AVAILABLE IN TENON OR MAST ARM MOUNTING; SPECIFY TYPE DESIRED.

LUMINAIRE MOUNTING ARM DETAILS

REVISED: MARCH 2013 | LUMINAIRE PLATE: XL-31

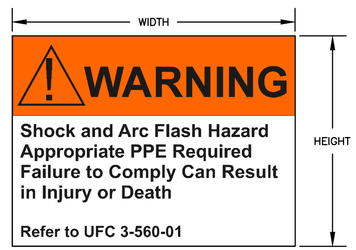

NOTES:

1. PROVIDE SELF-ADHESIVE VINYL LABEL TO AFFIX TO ELECTRICAL EQUIPMENT TO WARN OF ARC FLASH HAZARDS.
2. THE LABEL FORMAT AND TEXT SHALL BE IN ACCORDANCE WITH THE FIGURE.
3. THE LABEL SHALL BE LOCATED ON THE EQUIPMENT TO BE CLEARLY VISIBLE TO QUALIFIED PERSONS BEFORE EXAMINATION, ADJUSTMENT, SERVICING, OR MAINTENANCE OF THE EQUIPMENT.
4. THE SIZE OF THE LABEL SHALL BE:

EQUIPMENT TYPE	HEIGHT	WIDTH
OUTDOOR	4"	6"

5. A DOWNLOADABLE WINDOWS METAFILE IS AVAILABLE ON THE WHOLE BUILDING DESIGN GUIDE WEBSITE (WWW.WDBG.ORG) FOR USE IN A LABEL MAKING MACHINE.
   A. THE FILE IS LOCATED ON THE "NAVFAC CADD DETAILS" PAGE. TO NAVIGATE TO THIS LOCATION, FOLLOW: HOME > DOCUMENTS & REFERENCES > CCB > CADD LIBRARY > NAVFAC CADD RESOURCES > NAVFAC CADD DETAILS.
   B. ALTERNATIVELY, TYPE IN THE FOLLOWING ADDRESS IN INTERNET EXPLORER: HTTP://WWW.WBDG.ORG/CCB/BROWSE_CAT.PHP?O=78&C=232

ARC FLASH WARNING LABEL

SKETCH DATE JANUARY 2008 | STYLE AF-1

SYM	DESCRIPTION	DATE	APPR

NAVFAC

COMMONWEALTH OF VIRGINIA
JAMES WALTER PFEFFERKORN JR.
Lic. No.018432
10 JUNE 2014
PROFESSIONAL ENGINEER
SEAL

ADVANCED ENGINEERING CONSULTANTS
Electrical - Mechanical - Plumbing - Fire Protection
249 CENTRAL PARK AVE
SUITE 330
VIRGINIA BEACH, VA 23462
Phone: 757.502.8882
Fax: 614.486.4082

A/E INFO

APPROVED
FOR COMMANDER NAVFAC / B.L.T.L.
ACTIVITY
SATISFACTORY TO DATE

DES KC | DRW JPW | CHK JWP
PM XXX
BRANCH MANAGER KDL ~~XXX~~
CHIEF ENG/ARCH TLO XXX
FIRE PROTECTION LRP XXX

DEPARTMENT OF THE NAVY
NAVAL FACILITIES ENGINEERING COMMAND
HAMPTON ROADS IPT
NAVAL FACILITIES ENGINEERING COMMAND ~ MID-ATLANTIC
NAVAL STATION – NORFOLK, VIRGINIA
NAVAL WEAPONS STATION
YORKTOWN, VIRGINIA
P-984 REGIMENTAL HEADQUARTERS
DETAILS – ELECTRICAL SITE

SCALE: AS NOTED
EPROJECT NO.: 1113910
CONSTR. CONTR. NO. N40085-13-C-4507
NAVFAC DRAWING NO. 12664853
SHEET OF
ES505

DRAWFORM REVISION: 7 AUGUST 2009

FILE NAME: V:\2013 proj\13-230-01 P984 DB HQ AND P985 DB BEQ\CAD\CAD Sheets - P984 Headquarters\1113910X-ES505 Details.dwg LAYOUT NAME: Layout1 PLOTTED: Monday, June 09, 2014 - 2:31pm USER: AEC47

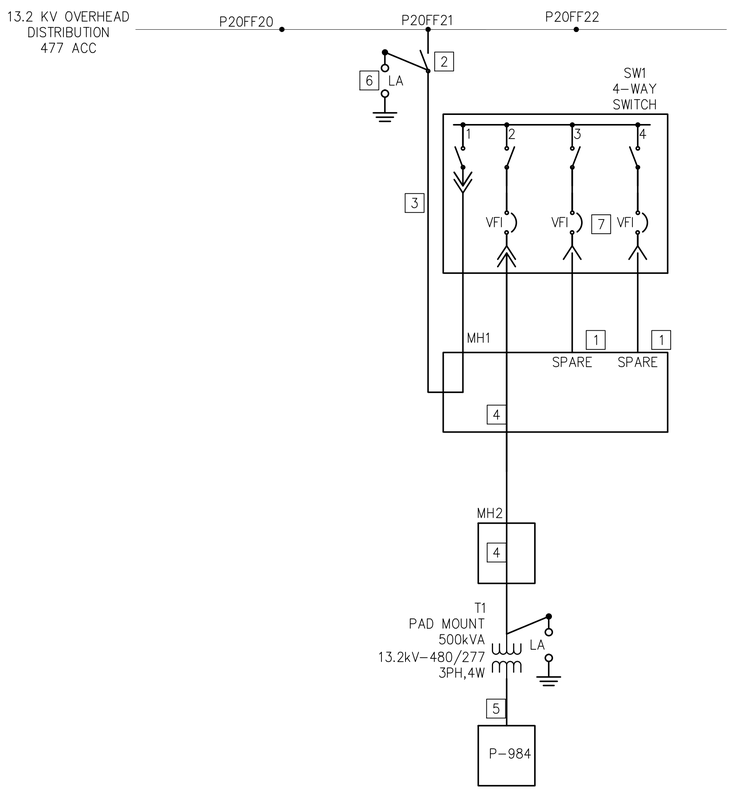

P-984 PARTIAL SINGLE LINE - NEW WORK

NOT TO SCALE

TYPICAL C2

HEAVY LINE INDICATES NEW WORK

LIGHT LINE INDICATES EXISTING TO REMAIN

SHEET KEYED NOTES

GENERAL NOTES:

A. ALL EQUIPMENT SHOWN ON THIS SHEET IS LOCATED ON PLAN SHEET ES107.
B. SEE SHEET ES106 FOR PHYSICAL LOCATIONS OF SW1, MH1, MH2, AND T1.

NEW WORK NOTES:

1. "SPARE", WHEN INDICATED ON THIS SINGLE-LINE DIAGRAM, REFERENCES SPARE CONDUITS FROM THE SWITCH TO THE MANHOLE.
2. FUSED CUTOUT, TERMINATION AND LIGHTNING ARRESTORS MOUNTED ON POLE. 15 kV, 200A.
3. SEE WIRING AND CABLE LEGEND, SHEET ES601, ID NUMBER 1.
4. SEE WIRING AND CABLE LEGEND, SHEET ES601, ID NUMBER 2. SEE WIRING AND CABLE LEGEND, SHEET ES601, ID NUMBER 20.
5. LIGHTNING ARRESTER. 10 kV, 8.9kV MCOV, DISTRIBUTION CLASS.
6. VACUUM FAULT INTERRUPTER. 15kV, 600A, 12.5kA.

SYM	DESCRIPTION	DATE	APPR

COMMONWEALTH OF VIRGINIA
JAMES WALTER PFEFFERKORN JR.
Lic. No.018432
10 JUNE 2014
PROFESSIONAL ENGINEER
SEAL

ADVANCED ENGINEERING CONSULTANTS
Electrical - Mechanical - Plumbing - Fire Protection
249 CENTRAL PARK AVE
SUITE 330
VIRGINIA BEACH, VA 23462
Phone: 757.502.8882
Fax: 614.486.4082
A/E INFO

APPROVED
FOR COMMANDER NAVFAC / B.L.T.L.
ACTIVITY
SATISFACTORY TO DATE

DES KC | DRW JPW | CHK JWP
PM XXX
BRANCH MANAGER KDL ~~XXX~~
CHIEF ENG/ARCH TLO XXX
FIRE PROTECTION LRP XXX

DEPARTMENT OF THE NAVY
NAVAL FACILITIES ENGINEERING COMMAND
HAMPTON ROADS IPT
NAVAL FACILITIES ENGINEERING COMMAND ~ MID-ATLANTIC
NAVAL STATION - NORFOLK, VIRGINIA
NAVAL WEAPONS STATION YORKTOWN, VIRGINIA
P-984 REGIMENTAL HEADQUARTERS
ELECTRICAL SINGLE LINE DIAGRAM - ELECTRICAL SITE

SCALE: AS NOTED
EPROJECT NO.: 1113910
CONSTR. CONTR. NO. N40085-13-C-4507
NAVFAC DRAWING NO. 12664854
SHEET OF
ES600

DRAWFORM REVISION: 7 AUGUST 2009

FILE NAME: V:\2013 proj\13-230-01 P984 DB HQ AND P985 DB BEQ\CAD\CAD Sheets - P984 Headquarters\1113910X-ES600 Electrical Single Line Diagram.dwg LAYOUT NAME: Layout1 PLOTTED: Monday, June 09, 2014 - 2:31pm USER: AEC47

WIRING AND CABLE LEGEND

ID NO.	COND. SIZE	TYPE AND INSTALLATION	CONTENTS	WIRE/CABLE ORIGIN	WIRE/CABLE DESTINATION	COMMENTS	PROJECT	SHEET #
1	6"	SCH 20 PVC DUCTBANK	(3) 500 KCMIL, 15kV, EPR, 133%, (1) 4/0 GND	POLE #20FF21	MANHOLE MH1		P-984	ES106
	6"	SCH 20 PVC DUCTBANK	PULLSTRING	POLE #20FF21	MANHOLE MH1		P-984	ES106
1	6"	SCH 20 PVC DUCTBANK	(3) 500 KCMIL, 15kV, EPR, 133%, (1) 4/0 GND	MANHOLE MH1	4-WAY SF6 PRIMARY SWITCH SW1		P-984	ES106
2	6"	SCH 20 PVC DUCTBANK	(3) 1/0 AWG, 15kV, EPR, 133%, (1) #4 AWG GND	4-WAY SF6 PRIMARY SWITCH	TRANSFORMER T1 (VIA MH1 & MH2)		P-984	ES106
	6"	SCH 20 PVC DUCTBANK	PULLSTRING	4-WAY SF6 PRIMARY SWITCH	TRANSFORMER T1 (VIA MH1 & MH2)		P-984	ES106
3	6"	SCH 20 PVC DUCTBANK	(3) 500 KCM, 15kV, EPR, 133%, (1) 4/0 GND	POLE #19FF3	MANHOLE MH3		P-985	ES103
	6"	SCH 20 PVC DUCTBANK	PULLSTRING	POLE #19FF3	MANHOLE MH3		P-985	ES103
3	6"	SCH 20 PVC DUCTBANK	(3) 500KCM, 15kV, EPR, 133%, (1) 4/0 GND	MANHOLE MH3	6-WAY SF6 PRIMARY SWITCH SW2		P-985	ES103
4	6"	SCH 20 PVC DUCTBANK	(3) 1/0 AWG, 15kV, EPR, 133%, (1) #4 AWG GND	6-WAY SF6 PRIMARY SWITCH SW2	TRANSFORMER T2 (VIA MH3 & MH4)		P-985	ES103, ES104
	6"	SCH 20 PVC DUCTBANK	PULLSTRING	6-WAY SF6 PRIMARY SWITCH SW2	TRANSFORMER T2 (VIA MH3 & MH4)		P-985	ES103, ES104
5	6"	SCH 20 PVC DUCTBANK	(3) 1/0 AWG CU, 15kV, EPR, 133%, #4 AWG GND	6-WAY SF6 PRIMARY SWITCH SW2	TRANSFORMER T3(E)		P-985	ES103
	6"	SCH 20 PVC DUCTBANK	PULLSTRING	6-WAY SF6 PRIMARY SWITCH SW2	TRANSFORMER T3(E)		P-985	ES103
6	6"	SCH 20 PVC DUCTBANK	(3) 500kCMIL, 15kV, EPR, 133% #1/0 AWG GND	6-WAY SF6 PRIMARY SWITCH SW2	6-WAY SF6 SW3 (VIA MH3 MH4 & MH5)		P-985	ES101, ES103
	6"	SCH 20 PVC DUCTBANK	PULLSTRING	6-WAY SF6 PRIMARY SWITCH SW2	6-WAY SF6 SW3 (VIA MH3, MH4 & MH5)		P-985	ES101, ES103
7	6"	SCH 20 PVC DUCTBANK	(3) 1/0 AWG, 15kV, EPR, 133%, #4 AWG GND	6-WAY SF6 PRIMARY SWITCH SW3	MANHOLE MH7(E) (VIA MH5 & MH6)		P-985	ES101, ES103
	6"	SCH 20 PVC DUCTBANK	PULLSTRING	6-WAY SF6 PRIMARY SWITCH SW3	MANHOLE MH7(E) (VIA MH5 & MH6)		P-985	ES101, ES103
8	4"	SCH 40 PVC DUCTBANK	200 PAIR, 24 GAUGE COPPER	BLDG 703, P-984	P-984		P-984	ES106, ES107
9	4"	SCH 40 PVC DUCTBANK	12 STRAND SINGLE MODE FIBER	BLDG 703, P-984	P-984		P-984	ES106, ES107
	4"	SCH 40 PVC DUCTBANK	PULLSTRING	BLDG 703, P-984	P-984	(2) 1-1/2" & (1) 1" INNERDUCT WITH PULLSTRING	P-984	ES106, ES107
10	4"	SCH 40 PVC DUCTBANK	100 PAIR, 24 GAUGE COPPER	BLDG 703, CMH5 FOR P-989	CHM-5 FOR USE BY P-986		P-984	ES106, ES107
11	4"	SCH 40 PVC DUCTBANK	24 STRAND SINGLE MODE FIBER	BLDG 703, CMH5 FOR P-989	CMH-5 FOR USE BY P-986		P-984	ES106, ES107
	4"	SCH 40 PVC DUCTBANK	PULLSTRING	BLDG 703, CMH5 FOR P-989	CMH-5	(2) 1-1/2" & (1) 1" INNERDUCT WITH PULLSTRING	P-984	ES106, ES107
12	4"	SCH 40 PVC DUCTBANK	50 PAIR, 24 GAUGE COPPER	SHUPPER DRIVE PEDESTAL	P-985		P-985	ES104
	4"	SCH 40 PVC DUCTBANK	PULLSTRING	SHUPPER DRIVE PEDESTAL	P-985	(2) 1-1/2" & (1) 1" INNERDUCT WITH PULLSTRING	P-985	ES104
13	4"	SCH 40 PVC DUCTBANK	12 STRAND SINGLE MODE FIBER	BUILDING 703	P-985		P-985	ES104
	4"	SCH 40 PVC DUCTBANK	PULLSTRING	BUILDING 703	CMH-11	(2) 1-1/2" & (1) 1" INNERDUCT WITH PULLSTRING	P-985	ES104
14	4"	SCH 40 PVC DUCTBANK	50 PAIR, 24 GAUGE COPPER	SHUPPER DRIVE PEDESTAL	CMH-11 FOR USE BY P-989		P-985	ES101, ES104, ES105
15	4"	SCH 40 PVC DUCTBANK	12 STRAND SINGLE MODE COPPER	BUILDING 703	CMH-11 FOR USE BY P-989		P-985	ES101, ES104, ES105
16	3/4"	DIRECT BURY CONDUIT	(2) #8, (1) #8 GND COPPER	ELECTRICAL ROOM 114 IN P-984	LIGHTING CIRCUIT		P-984	ES107
17	1"	DIRECT BURY CONDUIT	(2) #6, (1) #6 GND COPPER	ELECTRICAL ROOM 114 IN P-984	LIGHTING CIRCUIT		P-984	ES106
18	1"	DIRECT BURY CONDUIT	(2) #4, (1) #4 GND COPPER	ELECTRICAL ROOM 114 IN P-984	LIGHTING CIRCUIT		P-984	ES103, ES106
19	1"	DIRECT BURY CONDUIT	(2) #6, (1) #10 GND COPPER	SHUPPER DR LIGHTING CONTROLLER	LIGHTING CIRCUIT		P-984	ES101, ES104, ES105
20	4"	SCH 20 PVC DUCTBANK	(4) 600 KCM CU, (1) #3/0 GND, 4"C	ELECTRICAL ROOM 114 IN P-984	SERVICE ENTRANCE FEEDERS		P-985 P-984	ES104 ES107

NOTE: LIGHTER TEXT IN WIRING AND CABLE LEGEND COLUMNS "PROJECT" AND "SHEET" REFERENCES P-984 PROJECT.

SHEET KEYED NOTES

SYM	DESCRIPTION	DATE	APPR

NAVFAC

COMMONWEALTH OF VIRGINIA
JAMES WALTER PFEFFERKORN JR.
Lic. No.018432
10 JUNE 2014
PROFESSIONAL ENGINEER
SEAL

ADVANCED ENGINEERING CONSULTANTS
Electrical - Mechanical - Plumbing - Fire Protection
249 CENTRAL PARK AVE
SUITE 330
VIRGINIA BEACH, VA 23462
Phone: 757.502.8882
Fax: 614.486.4082
A/E INFO

APPROVED
FOR COMMANDER NAVFAC / B.L.T.L.
ACTIVITY
SATISFACTORY TO DATE

DES KC | DRW JPW | CHK JWP
PM XXX
BRANCH MANAGER KDL ~~XXX~~
CHIEF ENG/ARCH TLO XXX
FIRE PROTECTION LRP XXX

DEPARTMENT OF THE NAVY
NAVAL FACILITIES ENGINEERING COMMAND
HAMPTON ROADS IPT
NAVAL FACILITIES ENGINEERING COMMAND ~ MID-ATLANTIC
NAVAL STATION - NORFOLK, VIRGINIA
NAVAL WEAPONS STATION
YORKTOWN, VIRGINIA
P-984 REGIMENTAL HEADQUARTERS
SCHEDULES - ELECTRICAL SITE

SCALE: AS NOTED
EPROJECT NO.: 1113910
CONSTR. CONTR. NO. N40085-13-C-4507
NAVFAC DRAWING NO. 12664855
SHEET OF
ES601
DRAWFORM REVISION: 7 AUGUST 2009

FILE NAME: V:\2013 proj\13-235-01 P984 DB HQ AND P985 DB BEQ\CAD\CAD Sheets - P984 Headquarters\1113910X-ES601 Schedules.dwg LAYOUT NAME: Layout1 PLOTTED: Monday, June 09, 2014 - 2:31pm USER: AEC47

LIGHTING FIXTURE SCHEDULE

FIXTURE SYMBOL	SKETCH NO. & TYPE	NUMBER AND TYPE OF LAMPS	VOLTAGE	MOUNTING	NOTES:
A	XL-3, SHEET ES505	128 LED	480	30' STEEL (BRONZE) POLE (FIXTURE FACE AT 30' AFG)	TYPE III DISTRIBUTION; ARM INTEGRAL TO HEAD OR 18" MOUNTING ARM (POWER POLES)
B	XL-3, SHEET ES505	128 LED	480	30' STEEL (BRONZE) POLE (FIXTURE FACE AT 30' AFG)	TYPE IV DISTRIBUTION; ARM INTEGRAL TO HEAD
C	XL-3, SHEET ES505	256 LED	480	30' STEEL (BRONZE) POLE (FIXTURE FACE AT 30' AFG)	DOUBLE; 180; TYPE V DISTRIBUTION; ARM INTEGRAL TO HEAD
D	XL-21, SHEET ES505	60 LED	480	AT FINISHED GRADE	700mA; BRONZE
F	XL-4, SHEET ES505	1 1000W MH	480	35' STEEL (BRONZE) POLE	TYPE IV DISTRIBUTION, MOUNTED AT A 75 DEGREE ANGLE

CONDUCTOR SAG

CONDUCTOR SAG SCHEDULE - INITIAL

LOADING DISTRICT: MEDIUM LOADING ZONE

SAG #	SPAN LENGTH (FT)	RULING SPAN (FT)	TEMP (°F)	0	15	30	45	60	75	90	105	NOTES
1	143.8	133	SAG (FT)	0'-4"	0'-5"	0'-6"	0'-7"	0'-10"	1'-2"	1'-6"	1'-10"	
2	107.3	133	SAG (FT)	0'-3"	0'-3"	0'-4"	0'-5"	0'-6"	0'-7"	0'-9"	1'-0"	
3	140.0	133	SAG (FT)	0'-4"	0'-5"	0'-6"	0'-7"	0'-9"	1'-1"	1'-5"	1'-9"	
4	106.8	110	SAG (FT)	0'-3"	0'-3"	0'-4"	0'-5"	0'-7"	0'-9"	1'-0"	1'-4"	
5	106.5	110	SAG (FT)	0'-3"	0'-3"	0'-4"	0'-5"	0'-7"	0'-9"	1'-0"	1'-4"	
6	115.0	110	SAG (FT)	0'-3"	0'-4"	0'-5"	0'-6"	0'-8"	0'-11"	1'-3"	1'-7"	

CONDUCTOR SAG SCHEDULE - FINAL

LOADING DISTRICT: MEDIUM LOADING ZONE

SAG #	SPAN LENGTH (FT)	RULING SPAN (FT)	TEMP (°F)	0	15	30	45	60	75	90	105	NOTES
1	143.8	133	SAG (FT)	0'-5"	0'-6"	0'-9"	1'-1"	1'-5"	1'-10"	2'-3"	2'-8"	
2	107.3	133	SAG (FT)	0'-3"	0'-4"	0'-5"	0'-7"	0'-9"	1'-0"	1'-2"	1'-10"	
3	140.0	133	SAG (FT)	0'-5"	0'-6"	0'-9"	1'-0"	1'-4"	1'-9"	2'-1"	2'-5"	
4	106.8	110	SAG (FT)	0'-3"	0'-4"	0'-5"	0'-7"	0'-10"	1'-2"	1'-5"	1'-8"	
5	106.5	110	SAG (FT)	0'-3"	0'-4"	0'-5"	0'-7"	0'-10"	1'-2"	1'-5"	1'-8"	
6	115.0	110	SAG (FT)	0'-4"	0'-5"	0'-6"	0'-9"	1'-0"	1'-4"	1'-8"	1'-11"	

CONDUCTOR SAG SCHEDULE - INITIAL

LOADING DISTRICT: MEDIUM LOADING ZONE

SAG #	SPAN LENGTH (FT)	RULING SPAN (FT)	TEMP (°F)	0	15	30	45	60	75	90	105	NOTES
7	103.0	165.5	SAG (FT)	0'-2"	0'-2"	0'-3"	0'-3"	0'-4"	0'-6"	0'-8"	0'-9"	
8	156.0	165.5	SAG (FT)	0'-5"	0'-6"	0'-7"	0'-9"	0'-11"	1'-2"	1'-6"	1'-10"	
9	212.0	165.5	SAG (FT)	0'-9"	0'-11"	1'-0"	1'-3"	1'-7"	2'-1"	2'-8"	3'-3"	
10	123.0	165.5	SAG (FT)	0'-3"	0'-3"	0'-4"	0'-5"	0'-6"	0'-8"	0'-11"	1'-1"	

CONDUCTOR SAG SCHEDULE - FINAL

LOADING DISTRICT: MEDIUM LOADING ZONE

SAG #	SPAN LENGTH (FT)	RULING SPAN (FT)	TEMP (°F)	0	15	30	45	60	75	90	105	NOTES
7	103.0	165.5	SAG (FT)	0'-3"	0'-3"	0'-4"	0'-6"	0'-8"	0'-10"	1'-0"	1'-1"	
8	156.0	165.5	SAG (FT)	0'-5"	0'-6"	0'-7"	0'-9"	0'-11"	1'-1"	1'-5"	1'-9"	
9	212.0	165.5	SAG (FT)	0'-11"	1'-2"	1'-7"	2'-2"	2'-9"	3'-5"	4'-0"	4'-6"	
10	123.0	165.5	SAG (FT)	0'-4"	0'-5"	0'-7"	0'-9"	0'-11"	1'-2"	1'-4"	1'-6"	

CONDUCTOR SAG SCHEDULE - INITIAL

LOADING DISTRICT: MEDIUM LOADING ZONE

SAG #	SPAN LENGTH (FT)	RULING SPAN (FT)	TEMP (°F)	0	15	30	45	60	75	90	105	NOTES
11	166.0	144.0	SAG (FT)	0'-6"	0'-7"	0'-9"	0'-10"	1'-1"	1'-5"	1'-10"	2'-4"	
12	80.0	144.0	SAG (FT)	0'-1"	0'-2"	0'-2"	0'-2"	0'-3"	0'-4"	0'-5"	0'-6"	

CONDUCTOR SAG SCHEDULE - FINAL

LOADING DISTRICT: MEDIUM LOADING ZONE

SAG #	SPAN LENGTH (FT)	RULING SPAN (FT)	TEMP (°F)	0	15	30	45	60	75	90	105	NOTES
11	166.0	144.0	SAG (FT)	0'-7"	0'-9"	1'-0"	1'-4"	1'-10"	2'-4"	2'-9"	3'-2"	
12	80.0	144.0	SAG (FT)	0'-2"	0'-2"	0'-3"	0'-4"	0'-5"	0'-6"	0'-8"	0'-9"	

SHEET KEYED NOTES

GENERAL NOTES:

A. ALL FIXTURES IN THE LIGHTING FIXTURE SCHEDULE SHALL HAVE INTEGRAL SURGE PROTECTION UNLESS OTHERWISE NOTED.

SYM	DESCRIPTION	DATE	APPR

NAVFAC

COMMONWEALTH OF VIRGINIA
JAMES WALTER PFEFFERKORN JR.
Lic. No.018432
10 JUNE 2014
PROFESSIONAL ENGINEER
SEAL

ADVANCED ENGINEERING CONSULTANTS
Electrical - Mechanical - Plumbing - Fire Protection
249 CENTRAL PARK AVE
SUITE 330
VIRGINIA BEACH, VA 23462
Phone: 757.502.8882
Fax: 614.486.4082
A/E INFO

APPROVED
FOR COMMANDER NAVFAC / B.L.T.L.
ACTIVITY
SATISFACTORY TO DATE

DES KC | DRW JPW | CHK JWP
PM XXX
BRANCH MANAGER KDL ~~XXX~~
CHIEF ENG/ARCH TLO XXX
FIRE PROTECTION LRP XXX

DEPARTMENT OF THE NAVY
NAVAL FACILITIES ENGINEERING COMMAND
NAVAL FACILITIES ENGINEERING COMMAND ~ MID-ATLANTIC
NAVAL STATION ~ NORFOLK, VIRGINIA
HAMPTON ROADS IPT
NAVAL WEAPONS STATION YORKTOWN, VIRGINIA
P-984 REGIMENTAL HEADQUARTERS
SCHEDULES ~ ELECTRICAL SITE

SCALE: AS NOTED
EPROJECT NO.: 1113910
CONSTR. CONTR. NO. N40085-13-C-4507
NAVFAC DRAWING NO. 12664856
SHEET OF
ES602

DRAWFORM REVISION: 7 AUGUST 2009

FILE NAME: V:\2013 proj\13-230-01 P984 DB HQ AND P985 DB BEQ\CAD\CAD Sheets - P984 Headquarters\1113910X-ES602 Schedules.dwg LAYOUT NAME: Layout1 PLOTTED: Monday, June 09, 2014 - 2:31pm USER: AEC47

YORKTOWN NWS P984 STAKING SHEET

POLE NO	SPAN	POLE HT – CLASS	POLE DEPTH	GND UNIT	OUTAGE NUMBER	PRIMARY DISTRIBUTION UNIT	PRIMARY DISTRIBUTION WIRE SIZE	PRIMARY DISTRIBUTION MISC. UNITS	WIRE SIZE	GUY NO.	GUY TYPE	LINE ANGLE (DEG.)	ANCHOR NO.	ANCHOR TYPE	CUSTOMER NUMBER	SHEET NUMBER	COMMENTS
20FF6A	140	---	N/A	ADD OH-41	N/A	ADD NEW OH-8(10, OH-15, OH-33, OH-31	A			2	OH-32	38.66	2	SPEC		ES102	EXISTING POLE TO REMAIN.
										1	OH-32	36.17					
										2	OH-33	43.03					
										1	OH-33	41.26					
*EX20FF6	140	DEMO		DEMO	AFTER #2				D				1			ED101	DEMO ALL EXISTING
*EX20FF4	144	DEMO		DEMO	AFTER #1	(1) OH-8, (6) OH-13			D				1			ED103	DEMO ALL EXISTING
20FF4	144	45/3	6'-6"	OH-41		(1) OH-8, (6) OH-13	A		***	1	OH-33	33.69	1	SPEC			RESTORE LIGHTING CIRCUIT, INSTALL NEW FIXTURE
										1	OH-33	30.32					
										1	OH-32	14.93					
										1	OH-32	16.30					
*EX20FF3	99	DEMO		DEMO	AFTER #1				D							ED103	DEMOLISH EXISTING SECONDARY TO 20FF1
*EX20FF2	194	DEMO		DEMO	AFTER #1	(1) OH-8, (6) OH-13			D							ED103	DEMO ALL EXISTING
20FF2	194	45/3	6'-6"	OH-41		(1) OH-8, (6) OH-13	A		***					SPEC			RESTORE LIGHTING CIRCUIT, INSTALL NEW FIXTURE
*EX20GG11	119	DEMO		DEMO	AFTER #1	(1) OH-8, (6) OH-13			D				2			ED103	DEMO ALL EXISTING
20GG11	119	45/3	6'-6"	OH-41		(1) OH-8, (6) OH-13	A		***	1	OH-33	33.69	2	SPEC			RESTORE LIGHTING CIRCUIT, INSTALL NEW FIXTURE
										1	OH-33	30.32					
										1	OH-32	14.93					
										1	OH-32	16.30					
*EX19GG22	188	DEMO		DEMO	AFTER #1	(2) OH-8, (2) OH-15, (6) OH-13			D				4			ED102	DEMO ALL EXISTING
19GG22	188	45/3	7'-0"	OH-41		(2) OH-8, (2) OH-15, (6) OH-13	A		***	2	OH-33	33.69	4	SPEC			RESTORE LIGHTING CIRCUIT, INSTALL NEW FIXTURE
										1	OH-33	30.32					
										2	OH-32	33.69					
										1	OH-32	30.32					
*EX19GG20	121	DEMO		DEMO	AFTER #2	(2) OH-8, (2) OH-15, (6) OH-15			D				1			ED102	DEMO ALL EXISTING
19GG20	121	45/3	6'-6"	OH-41		(2) OH-8, (2) OH-15, (6) OH-15	A		***				1	SPEC	703, 2011		RESTORE LIGHTING CIRCUIT, INSTALL NEW FIXTURE
*EX19GG19	102	DEMO		DEMO	AFTER #2	(1) OH-8, (6) OH-13			D				2			ED102	DEMO ALL EXISTING
19GG19	102	45/3	6'-6"	OH-41		(1) OH-8, (6) OH-13	A		***				2	SPEC			RESTORE LIGHTING CIRCUIT, INSTALL NEW FIXTURE
*EX19GG18A	109	DEMO		DEMO	#2		A		D							ED102	DEMO ALL EXISTING
19GG18B										2	OH-32	44.62					
										1	OH-32	41.26					
										2	OH-32	41.38					
										1	OH-32	37.78					
19GG18A	109	50/3	7'-0"	OH-41	#2	(1)OH-8, (6)OH-13, (2)OH-15, (1)OH-31	A		***	2	OH-32	41.38	1	SPEC	704		RESTORE LIGHTING CIRCUIT, INSTALL NEW FIXTURE
										1	OH-32	37.78					
										2	OH-32	44.62					
										1	OH-32	41.26					
*EX19GG18		DEMO		DEMO			N/A		N/A							ED102	DEMO ALL EXISTING
*EX19GG17	155	DEMO		DEMO	AFTER #1				D				1			ED102	DEMO ALL EXISTING
19GG17	155	DEMO	6'-6"	OH-41		(1) OH-8, (6) OH-13	A		***								RESTORE LIGHTING CIRCUIT, INSTALL NEW FIXTURE
*EX19GG16	107	DEMO		DEMO	AFTER #1				D							ED102	DEMO ALL EXISTING
19GG16	107	45/3	6'-6"	OH-41		(1) OH-7, (6) OH-13	A		***								RESTORE LIGHTING CIRCUIT, INSTALL NEW FIXTURE
*EX19FF3	144	DEMO		DEMO	AFTER #1				D							–	DEMO ALL EXISTING
19FF3	144	45/3	6'-6"	OH-35 OH-41		(1)OH-8, (1)OH-15, (1)OH-31, (1)OH-35	A			2	OH-32	44.62	3	SPEC		–	RESTORE LIGHTING CIRCUIT, INSTALL NEW FIXTURE
										1	OH-32	41.26					
19FF2	144						D		***							–	EXISTING TO REMAIN, INSTALL NEW FIXTURE
19FF1	144						D		***							–	EXISTING TO REMAIN, INSTALL NEW FIXTURE
20FF21		50/3		OH-35 OH-41		(1)OH-8, (1)OH-15, (1)OH-31, (1)OH-35	A									ES106	EXISTING POLE TO REMAIN
PP-01	166	45/3	6'-6"	OH-41		(1)OH-8, (1)OH-15, (1)OH-26	***		***							ES104	
18GG4										1	OH-32	14.93					
										1	OH-32	16.30					
*EX19FF12B	117			DEMO	AFTER #2		A						4			ED101	DEMO ALL EXISTING; COORDINATE WITH P-989
*EX19FF12A	100			DEMO	AFTER #2		A									ED101	DEMO ALL EXISTING; COORDINATE WITH P-989
*EX19FF8	146			DEMO	AFTER #2		A									ED103	DEMO ALL EXISTING
*EX19FF9	124			DEMO	AFTER #2		A						2			ED103	DEMO ALL EXISTING
*EX19FF10	49			DEMO	AFTER #2		A	(3) 25kVA					1			ED103	DEMO ALL EXISTING
*EX19FF7	144			DEMO	AFTER #2		A	15kVA								ED103	DEMO ALL EXISTING
*EX19FF6	148			DEMO	AFTER #2		A	25kVA								ED103	DEMO ALL EXISTING
*EX19GG52	127			DEMO	AFTER #2		D									ED103	DEMO ALL EXISTING
*EX19GG54	100			DEMO	AFTER #2		D									ED103	DEMO ALL EXISTING
*EX19GG56	119			DEMO	AFTER #2		D									ED103	DEMO ALL EXISTING
*EX19GG51	121			DEMO	AFTER #2		D									ED103	DEMO ALL EXISTING
*EX19GG53	128			DEMO	AFTER #2		D									ED103	DEMO ALL EXISTING
*EX19GG55	131			DEMO	AFTER #2		D									ED103	DEMO ALL EXISTING
*EX19FF12	54			DEMO	AFTER #2		C									ED101	DEMO ALL EXISTING; COORDINATE WITH P-989
*EX19FF13	160			DEMO	AFTER #2		C									ED101	DEMO ALL EXISTING; COORDINATE WITH P-989
*EX19FF14	156			DEMO	AFTER #2		C									–	DEMO ALL EXISTING; COORDINATE WITH P-989
*EX19FF11A	185			DEMO	#1		C									–	DEMO ALL EXISTING
*EX19FF5				DEMO	AFTER #2		C									ED102	DEMO ALL EXISTING
*EX20FF1				DEMO	ANY		C									ED103	DEMO ALL EXISTING
*EX19FF11	35			DEMO	#1		C									ED102	DEMO ALL EXISTING

SHEET KEYED NOTES

GENERAL NOTES:

A. SEE SHEET ES503 FOR MANHOLE DETAILS.
B. POLES 20FF4, 20FF2, 20GG11, 20GG22, 19GG20, 19GG19, 18GG18A, 19GG17, 19GG16 AND 19FF3 SHALL BE DEMOLISHED; EACH SHALL BE REPLACED WITH A POLE HAVING THE SAME NUMERICAL ASSIGNMENT.
C. SEE SHEET ES601 FOR WIRE AND CIRCUIT INFORMATION.
D. STAKING SHEET LEGEND
   *EX = DEMOLISH
   A = 3-477 AAC W/1 – 4/0 GND
   B = #2 ACSR
   C = #4 SOLID COPPER
   D = LIGHTING CIRCUIT OF UNKNOWN SIZE
E. OH-40 SHALL BE USED AS REQUIRED FOR LIGHTING CIRCUITS.

SYM	DESCRIPTION	DATE	APPR

NAVFAC

COMMONWEALTH OF VIRGINIA
JAMES WALTER PFEFFERKORN JR.
Lic. No.018432
10 JUNE 2014
PROFESSIONAL ENGINEER
SEAL

ADVANCED ENGINEERING CONSULTANTS
Electrical · Mechanical · Plumbing · Fire Protection
249 CENTRAL PARK AVE
SUITE 330
VIRGINIA BEACH, VA 23462
Phone: 757.502.8882
Fax: 614.486.4082
A/E INFO

APPROVED
FOR COMMANDER NAVFAC / B.L.T.L.
ACTIVITY
SATISFACTORY TO DATE

DES KC | DRW JPW | CHK JWP
PM XXX
BRANCH MANAGER KDL ~~XXX~~
CHIEF ENG/ARCH TLO XXX
FIRE PROTECTION LRP XXX

DEPARTMENT OF THE NAVY
NAVAL FACILITIES ENGINEERING COMMAND
NAVAL FACILITIES ENGINEERING COMMAND ~ MID-ATLANTIC
HAMPTON ROADS IPT
NAVAL STATION – NORFOLK, VIRGINIA
NAVAL WEAPONS STATION YORKTOWN, VIRGINIA
P-984 REGIMENTAL HEADQUARTERS
STAKING SHEET – ELECTRICAL SITE

SCALE: AS NOTED
EPROJECT NO.: 1113910
CONSTR. CONTR. NO. N40085-13-C-4507
NAVFAC DRAWING NO. 12664857
SHEET OF
ES603
DRAWFORM REVISION: 7 AUGUST 2009

FILE NAME: K:\2013 proj\13-230-01 P984 DB HQ AND P985 DB BEQ\CAD\CAD Sheets – P984 Headquarters\1113910X-ES603 Staking Sheet.dwg LAYOUT NAME: Layout1 PLOTTED: Monday, June 09, 2014 – 2:32pm USER: AEC47

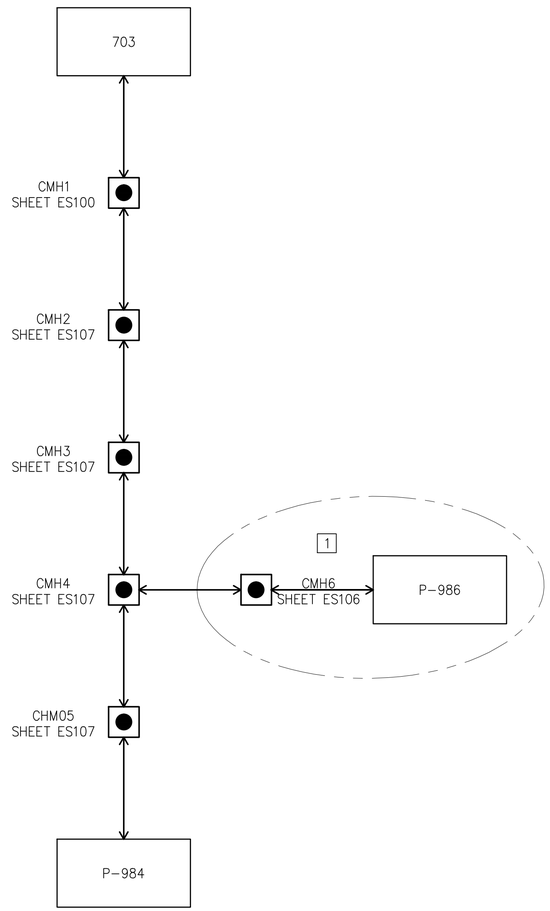

P-984 PARTIAL TELECOMMUNICATIONS SINGLE LINE - NEW WORK

NOT TO SCALE

TYPICAL B3

SHEET KEYED NOTES

GENERAL NOTES:

A. SEE SHEET ES601 FOR WIRE AND CONDUIT INFORMATION.
B. SEE SHEET ES503 FOR MANHOLE DETAILS.
C. COORDINATE INCLUSION OF ELECTRONIC SECURITY SYSTEM CABLES WITH BUILDING-SPECIFIC ELECTRICAL SHEETS.
D. 4'X4'X4' HANDHOLE PERMITTED IN LIEU OF A TYPE 1 MANHOLE WHEN THREE OR FEWER CONDUITS PASS THROUGH MANHOLE AND NO SPLICES ARE REQUIRED IN THE MANHOLE.

☐ NEW WORK NOTES:

1. EXTENSION OF COPPER AND FIBER TO P-986 IS LIMITED TO PULLING THE SPECIFIED NUMBERS OF COPPER AND FIBER CONDUCTORS TO MANHOLE CMH06. CMH06 SHALL BE INSTALLED BY THE P-986 PROJECT; COORDINATE WITH P-986 PROJECT TEAM FOR EXACT LOCATION.

SYM	DESCRIPTION	DATE	APPR

NAVFAC

COMMONWEALTH OF VIRGINIA
JAMES WALTER PFEFFERKORN JR.
Lic. No.018432
10 JUNE 2014
PROFESSIONAL ENGINEER
SEAL

ADVANCED ENGINEERING CONSULTANTS
Electrical - Mechanical - Plumbing - Fire Protection
249 CENTRAL PARK AVE
SUITE 330
VIRGINIA BEACH, VA 23462
Phone: 757.502.8882
Fax: 614.486.4082
A/E INFO

APPROVED
FOR COMMANDER NAVFAC / B.L.T.I.
ACTIVITY
SATISFACTORY TO DATE

DES KC | DRW JPW | CHK JWP
PM XXX
BRANCH MANAGER KDL ~~XXX~~
CHIEF ENG/ARCH TLO XXX
FIRE PROTECTION LRP XXX

DEPARTMENT OF THE NAVY
NAVAL FACILITIES ENGINEERING COMMAND
HAMPTON ROADS IPT
NAVAL FACILITIES ENGINEERING COMMAND ~ MID-ATLANTIC
NAVAL STATION - NORFOLK, VIRGINIA
NAVAL WEAPONS STATION
YORKTOWN, VIRGINIA
P-984 REGIMENTAL HEADQUARTERS
TELECOMMUNICATIONS SINGLE LINE DIAGRAM - ELECTRICAL SITE

SCALE: AS NOTED
EPROJECT NO.: 1113910
CONSTR. CONTR. NO. N40085-13-C-4507
NAVFAC DRAWING NO. 12664858
SHEET OF
ES604

DRAWFORM REVISION: 7 AUGUST 2009

FILE NAME: V:\2013 proj\13-230-01 P984 DB HQ AND P985 DB BEQ\CAD\CAD Sheets - P984 Headquarters\1113910X-ES604 Telecommunications Single Line Diagram.dwg LAYOUT NAME: Layout1 PLOTTED: Monday, June 09, 2014 - 2:32pm USER: AEC47