GENERAL NOTES:

1. DESIGN CRITERIA:

   A. ASCE 7-10, "MINIMUM DESIGN LOAD FOR BUILDINGS AND OTHER STRUCTURES
   B. ACI 318-11 "BUILDING CODE REQUIREMENTS FOR STRUCTURAL CONCRETE"
   C. ACI 530-08, "BUILDING CODE REQUIREMENTS FOR MASONRY STRUCTURES"
   D. AISC 15TH EDITION, "MANUAL OF STEEL CONSTRUCTION"
   E. UFC 3-301-01 STRUCTURAL ENGINEERING

2. DESIGN DATA:

   A. LIVE LOADS
      FLOOR _ 350 PSF & 10K AXLE
      ROOF _20 PSF
      WIND _131 MPH
   B. OTHER DATA:
      SOIL BEARING CAPACITY _ _ _ _ _ _ _ _ _ _ _ _ _ _ _ _ _2000 PSF

3. COORDINATE ALL OPENINGS IN FLOORS, WALL AND ROOF WITH ARCHITECTURAL, MECHANICAL AND ELECTRICAL DRAWINGS.

4. ALL WELDS SHALL BE MADE WITH CLASS E-70XX SERIES ELECTRODES, AND SHALL CONFORM TO THE REQUIREMENTS OF THE STRUCTURAL WELDING CODE OF THE AMERICAN WELDING SOCIETY, AWS D1.1.

5. ALL EQUIPMENT HUNG FROM JOISTS SHALL BE LOCATED AT PANEL POINTS.

6. THE STRUCTURE IS DESIGNED TO BE SELF-SUPPORTING AND STABLE AFTER THE BUILDING IS FULLY COMPLETED. IT IS SOLELY THE CONTRACTOR'S RESPONSIBILITY TO DETERMINE ERECTION PROCEDURES AND SEQUENCE OF CONSTRUCTION. THIS INCLUDES THE ADDITION OF ANY SHORING, SHEETING, BRACING OR TIE DOWNS AS REQUIRED. THE ENGINEER IS NOT RESPONSIBLE FOR, CONSTRUCTION MEANS AND METHODS OR JOB SITE SAFETY DURING CONSTRUCTION. IT IS SOLELY THE RESPONSIBILITY OF EACH CONTRACTOR TO FOLLOW ALL APPLICABLE SAFETY CODES AND REGULATIONS DURING CONSTRUCTION.

CONCRETE NOTES:

1. CONCRETE CONSTRUCTION SHALL BE IN ACCORDANCE WITH ACI 318-11.

2. CONCRETE SHALL HAVE A MINIMUM 28 DAY COMPRESSIVE STRENTGH OF 4000 PSI.

3. REINFORCING STEEL SHALL BE DEFORMED BARS IN ACCORDANCE WITH ASTM A-615 GRADE 60.

4. ALL REINFORCEMENT SHALL BE CONTINUOUS UNLESS OTHERWISE NOTED.

5. CONTINUOUS REINFORCING STEEL SHALL BE LAPPED IN ACCORDANCE WITH ACI-318-11 REQUIREMENTS UNLESS OTHERWISE NOTED.

6. MINIMUM COVER FOR REINFORCING STEEL SHALL BE IN ACCORDANCE WITH 318-11.

FOUNDATION NOTES:

1. SLAB-ON-GRADE SHALL BE 6" THICK CONCRETE REINFORCED WITH ONE LAYER OF #4@12" C/C EACH WAY 2" FROM TOP SURFACE ON 6" THICK #57 STONE FILL OVER 10 MIL POLYETHYLENE VAPOR BARRIER.

2. ALL WALLS SHOWN ON PLAN ARE FULL HEIGHT UNLESS NOTED OTHERWISE. AND EXTEND TO JOIST BEARING ELEVATION OR UNDERSIDE OR ROOF DECK, AS APPROPRIATE.

3. EXTERIOR EQUIPMENT SLABS SHALL BE SIZED TO ACCOMMODATE THE EQUIPMENT FOOTPRINT WITH APPROXIMATELY 1 FT. CLEARANCE ON EACH SIDE. FOR SLAB DETAILS, SEE EQUIPMENT SLAB TYPICAL SECTION SHT. S-502.

4. THE SOIL BENEATH THE NEW SLAB ON GRADE SHALL BE PREPARED IN ACCORDANCE WITH THE GEOTECHNICAL REPORT TITLED, "REPORT OF SUBSURFACE EXPLORATION AND GEOTECHNICAL ENGINEERING SERVICES, ENERGY AND RELIABILITY MODERNIZATION OF AIRFIELD LIGHTING, NAVAL AIR STATION (NAS) OCEANA, VIRGINIA BEACH, VIRGINIA", NOVEMBER, 2014.

5. CONCRETE SHALL NOT BE POURED ON FROZEN GROUND OR STANDING WATER.

6. PROVIDE SHEETING AS REQUIRED TO SUPPORT LATERAL LOADS DURING EXCAVATION. SEE GEOTECHNICAL REPORT FOR SOIL PROPERTIES.

7. CONTRACTOR SHALL SAFEGUARD AND PROTECT ALL EXCAVATIONS AND ALL EXCAVATIONS SHALL BE KEPT FREE OF WATER.

8. A SOIL BEARING CAPACITY IS ASSUMED AS 2000 PSF IN THE DESIGN, AND MUST BE FIELD VERIFIED BY A REGISTERED GEOTECHNICAL ENGINEER. IF THE INDICATED BEARING CAPACITY IS NOT ENCOUNTERED AT THE ELEVATIONS INDICATED ON THE CONTRACT THE FOUNDATIONS SHALL BE LOWERED OR INCREASED IN SIZE AS DIRECTED BY THE STRUCTURAL ENGINEER.

MASONRY NOTES:

1. CONCRETE MASONRY UNITS (CMU) SHALL HAVE A MINIMUM 28 DAY COMPRESSIVE STRENGTH OF 1500 PSI AND SHALL CONFORM TO ASTM C90.

2. ALL MORTAR SHALL CONFORM TO ASTM C-270, TYPE M OR S.

3. GROUT USED TO FILL CMU CELLS SHALL CONFORM TO ASTM C-476 AND OBTAIN A MINIMUM 28 DAY COMPRESSIVE STRENGTH OF 3000 PSI.

4. GROUT SOLID CMU CELLS CONTAINING REINFORCEMENT OR ANCHORS. ALL VERTICAL REINFORCING SHALL BE CENTERED AND CONTINUOUS FOR THE FULL HEIGHT OF THE WALL.

5. ALL CMU SHALL BE LAID IN RUNNING BOND PATTERN.

6. PROVIDE GALVANIZED TRUSS TYPE HORIZONTAL JOINT REINFORCING AT EVERY OTHER COURSE IN ALL MASONRY WALLS.

7. PROVIDE CONTINUOUS BOND BEAMS AT THE TOP OF WALLS AND SPACED VERTICALLY NOT MORE THAN 72 IN FOR THE ENTIRE HEIGHT OF WALL. BOND BEAMS SHALL BE 8" DEEP WITH 2 #5 BARS UNLESS OTHERWISE NOTED.

8. CONTINUOUS REINFORCING STEEL SHALL BE LAPPED IN ACCORDANCE WITH ACI-318-11 REQUIREMENTS UNLESS OTHERWISE NOTED. HORIZONTAL MASONRY REINFORCING SHALL BE CONTINUOUS AROUND ALL CORNERS AND AT INTERSECTING WALLS. SEE TYPICAL DETAIL.

9. ANCHOR BOLTS SHALL BE SIZE AND EMBEDMENT INDICATED.

10. THE BOND BEAMS INDICATED ON PLAN SHALL BE A 8 IN. DEEP BOND BEAM REINFORCED WITH WITH 2 #5 AT BOTTOM.

UTILITIES:

1. CONTRACTOR TO VERIFY LOCATIONS OF ALL UNDERGROUND UTILITIES PRIOR TO COMMENCING WORK.

2. PROTECT EXISTING UTILITIES TO REMAIN DURING CONSTRUCTION.

3. PROMPTLY REPAIR DAMAGES CAUSED TO ADJACENT FACILITIES BY DEMOLITION WORK AT NO COST TO THE OWNER.

4. CONTRACTOR IS RESPONSIBLE TO REMOVE DEBRIS AND OTHER MATERIALS RESULTING FROM EXCAVATION/DEMOLTION OPERATIONS FROM BUILDING SITE. TRANSPORT AND DISPOSE OF MATERIALS OFF SITE IN ACCORDANCE WITH ALL APPLICABLE REGULATIONS.

5. ALL CONDUIT SHALL EITHER GO THROUGH THE WALLS SLEEVED OR DEPRESSED BELOW THE FOOTING, ENCASED IN CONCRETE. IF ENCASED IN CONCRETE, THE ENCASEMENT SHALL BE 12"X12" WITH 4-#4 BARS. IF SLEEVED THROUGH THE WALL, THE FOOTING MAY BE STEPPED DOWN AT THE LOCATION OF THE CONDUIT. A SLEEVED CONDUIT SHALL GO THROUGH THE WALL AT A 90 DEGREE ANGLE.

INSPECTION:

1. ALL WORK SPECIFIED HEREIN SHALL BE INSPECTED IN ACCORDANCE WITH THE BUILDING CODE AND ALL LOCAL ORDINANCES. THE OWNER OR CONTRACTOR SHALL HIRE AN EXPERIENCED QUALIFIED INSPECTOR TO PERFORM ALL REQUIRED INSPECTION WORK. INSPECTION SHALL CONSIST OF BUT NOT BE LIMITED TO, VISUAL OBSERVATIONS MATERIALS, EQUIPMENT OR CONSTRUCTION WORK FOR THE PURPOSE FO ASCERTAINING THAT THE WORK IS IN SUBSTANTIAL CONFORMANCE WITH THE CONTRACT DOCUMENTS AND WITH THE DESIGN INTENT. THE ENGINEER WILL NOT PERFORM THE REQUIRED INSPECTION AS PART OF THIS PRESENT CONTRACT. THE ENGINEER MAY VISIT THE SITE TO ASCERTAIN GENERAL CONFORMANCE TO THE CONTRACT DOCUMENTS, HOWEVER, SUCH VISITS SHALL NOT BE RELIED UPON BY OTHERS AS ACCEPTANCE OF THE WORK, NOR SHOULD IT BE CONSTRUED TO RELIEVE THE CONTRACTOR IN ANY WAY FROM THE OBLIGATIONS OF THE CONTRACT.

SHOP DRAWINGS:

1. SHOP DRAWINGS FOR ALL STRUCTURAL ELEMENTS SHOWN ON THE CONTRACT DOCUMENTS MUST BE SUBMITTED AND REVIEWED BY THE ENGINEER. ALL CONTRACTOR MODIFICATIONS MUST BE IDENTIFIED IN WRITING AS A PROPOSED "AS EQUAL" CHANGES AT THE TIME OF SUBMISSION. IF CONTRACTOR OR OWNER FAILS TO SUBMIT THE SHOP DRAWINGS OR FAILS TO FOLLOW THE ABOVE "AS EQUAL" PROCEDURE, ENGINEER OF RECORD. WILL NOT BE RESPONSIBLE FOR THE STRUCTURAL CERTIFICATION AND DESIGN OF THE PROJECT. SHOP DRAWINGS ARE REVIEWED BY THE ENGINEER AS A CONVENIENCE TO THE CONTRACTOR AND ARE NOT A CONTRACTOR DOCUMENT.

STEEL JOISTS:

1. THE SPACING, TYPE, AND INSTALLATION OF BRIDGING SHALL CONFORM TO THE SJI REQUIREMENTS UNLESS OTHERWISE NOTED. IN ADDITION, A SINGLE LINE OF BRIDGING SHALL BE PROVIDED AT THE FIRST BOTTOM CHORD PANEL POINT AT EACH END OF EVERY JOIST.

2. MECHANICAL OR OTHER EQUIPMENT SHALL NOT BE SUSPENDED FROM OR ATTACHED TO ANY BRIDGING.

ABBREVIATIONS:

CJ	CONTROL JOINT
CJJ	CRACK CONTROL JOINT
MIN.	MINIMUM
NOM.	NOMINAL
O.C.	ON CENTER
REINF.	REINFORCEMENT
TYP.	TYPICAL
WWF	WELDED WIRE FABRIC
W/	WITH
VIF	VERTICAL INSIDE FACE

GENERAL NOTE

GRAPHIC SCALE

1/4"=1'-0" 1' 0 2' 4' 8'

SYM	DESCRIPTION	DATE	APPR

NAVFAC

Warren Barrett
COMMONWEALTH OF VIRGINIA
WARREN ARTHUR BARRETT II
Lic. No. 017260
PROFESSIONAL ENGINEER
SEAL

A/E INFO

APPROVED

FOR COMMANDER NAVFAC

ACTIVITY

SATISFACTORY TO DATE

DES DRE DRW DRE CHK JRS

PM/DM

BRANCH MANAGER

CHIEF ENG/ARCH

DEPARTMENT OF THE NAVY
NAVAL FACILITIES ENGINEERING COMMAND
HR IPT
NAVAL FACILITIES ENGINEERING COMMAND – MID-ATLANTIC
NAVAL AIR STATION OCEANA – VIRGINIA BEACH, VIRGINIA
NAVAL AIR STATION OCEANA
VIRGINIA BEACH, VIRGINIA
ENERGY AND RELIABILITY
MODERNIZATION OF AIRFIELD LIGHTING - PHASE 1 AND 2
VAULT E-101, E-1120, E-3036 – GENERAL NOTES

SCALE: NONE
EPROJECT NO.: 1291651
CONSTR. CONTR. NO.
NAVFAC DRAWING NO.
12691622
SHEET 89 OF 383
S-001

DRAWFORM REVISION: 10 MARCH 2009

FILE NAME: H:\56427 NAS Oceana\Structural\Planset\Task 8\10-0863-008-S-001.dwg LAYOUT NAME: ED-145 PLOTTED: Tuesday, March 24, 2015 - 9:07am USER: kjernigan

H:\56427 NAS Oceana\Structural\Planset\Task 8\10-0863-008-S-001.dwg, 3/24/2015 9:06:53 AM, kjernigan

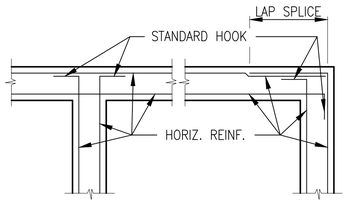

WALL CORNER REINFORCEMENT

SCALE: N.T.S.

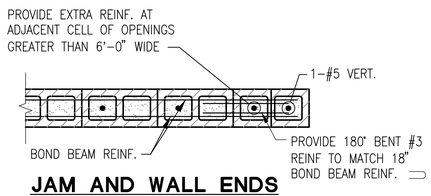

JAM AND WALL ENDS

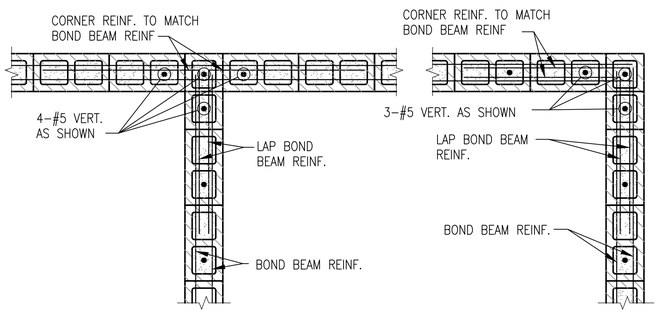

INTERSECTION **CORNERS**

NOTES:

1. GROUT ALL MASONRY CORES SOLID WHERE REINFORCING IS PLACED.
2. PROVIDE MINIMUM #5 @ 32" VERT. REINF. AT CENTER OF WALL.

TYPICAL MASONRY WALL VERTICAL REINFORCING DETAILS

SCALE: N.T.S.

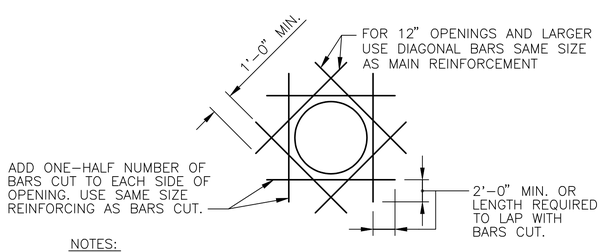

NOTES:

1. CIRCULAR OPENING SHOWN, RECTANGULAR OPENING SIMILAR.
2. EXTRA REINFORCING SHALL BE PROVIDED IN BOTH FACES UNLESS TYPICAL REINFORCING IS PLACED IN SINGLE LAYER ONLY.
3. WHEN DOWEL BARS ARE CUT PROVIDE DOWELS EACH SIDE OF OPENING IN ACCORDANCE WITH THIS DETAIL.

REINFORCING AT WALL AND SLAB OPENINGS

SCALE: N.T.S.

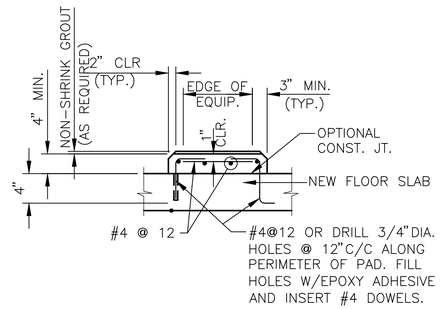

NOTE: DOWEL EMBEDMENT SHALL BE IN ACCORDANCE WITH EPOXY MANUFACTURER'S RECOMMENDATIONS.

CONCRETE PAD DETAIL

SCALE: N.T.S.

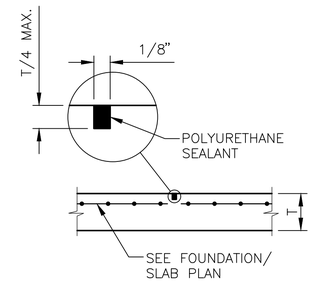

TYPICAL SAWCUT SLAB-ON-GRADE CONTROL JOINTS

SCALE: N.T.S.

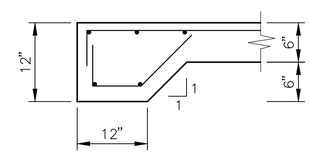

TYPICAL THICKENED SLAB

SCALE: N.T.S.

LEGEND

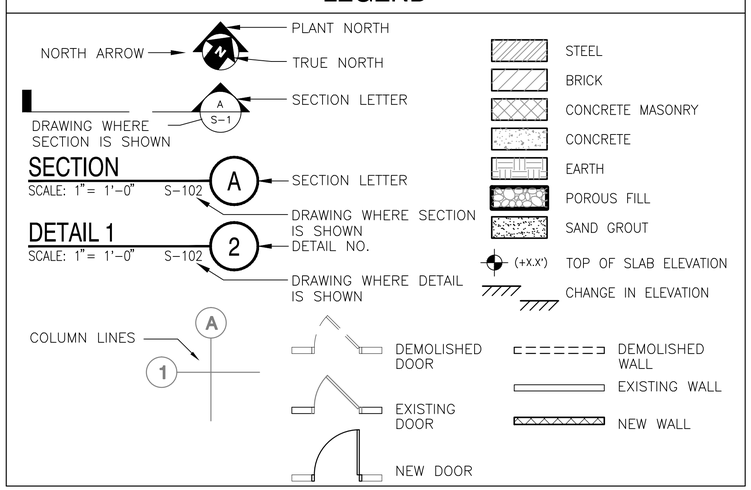

GENERAL SHEET NOTES

1. THE WORK SHOWN ON THIS DRAWING IS COMMON TO BOTH PHASE 1 AND PHASE 2.

GRAPHIC SCALE

1/4"=1'-0"

1' 0 2' 4' 8'

SYM	DESCRIPTION	DATE	APPR

NAVFAC

Warren Barrett
COMMONWEALTH OF VIRGINIA
WARREN ARTHUR BARRETT II
Lic. No. 017260
PROFESSIONAL ENGINEER
SEAL

A/E INFO

APPROVED

FOR COMMANDER NAVFAC

ACTIVITY

SATISFACTORY TO DATE

DES SF DRW KDJ CHK DJM

PM/DM

BRANCH MANAGER

CHIEF ENG/ARCH

DEPARTMENT OF THE NAVY
NAVAL FACILITIES ENGINEERING COMMAND ~ MID-ATLANTIC
NAVAL AIR STATION OCEANA – VIRGINIA BEACH, VIRGINIA
HR IPT

NAVAL FACILITIES ENGINEERING COMMAND
NAVAL AIR STATION OCEANA
VIRGINIA BEACH, VIRGINIA
ENERGY AND RELIABILITY
MODERNIZATION OF AIRFIELD LIGHTING - PHASE 1 AND 2
STRUCTURAL DETAILS

SCALE: NOT TO SCALE
EPROJECT NO.: 1291651
CONSTR. CONTR. NO.
NAVFAC DRAWING NO. 12691623
SHEET 90 OF 383
S-002

DRAWFORM REVISION: 10 MARCH 2009

FILE NAME: H:\56427 NAS Oceana\Structural\Phase1\Task 8\10-0863-008-S-002.dwg LAYOUT NAME: S-002 PLOTTED: Tuesday, March 24, 2015 - 9:09am USER: kjernigan

H:\56427 NAS Oceana\Structural\Phase1\Task 8\10-0863-008-S-002.dwg, 3/24/2015 9:08:59 AM, kjernigan

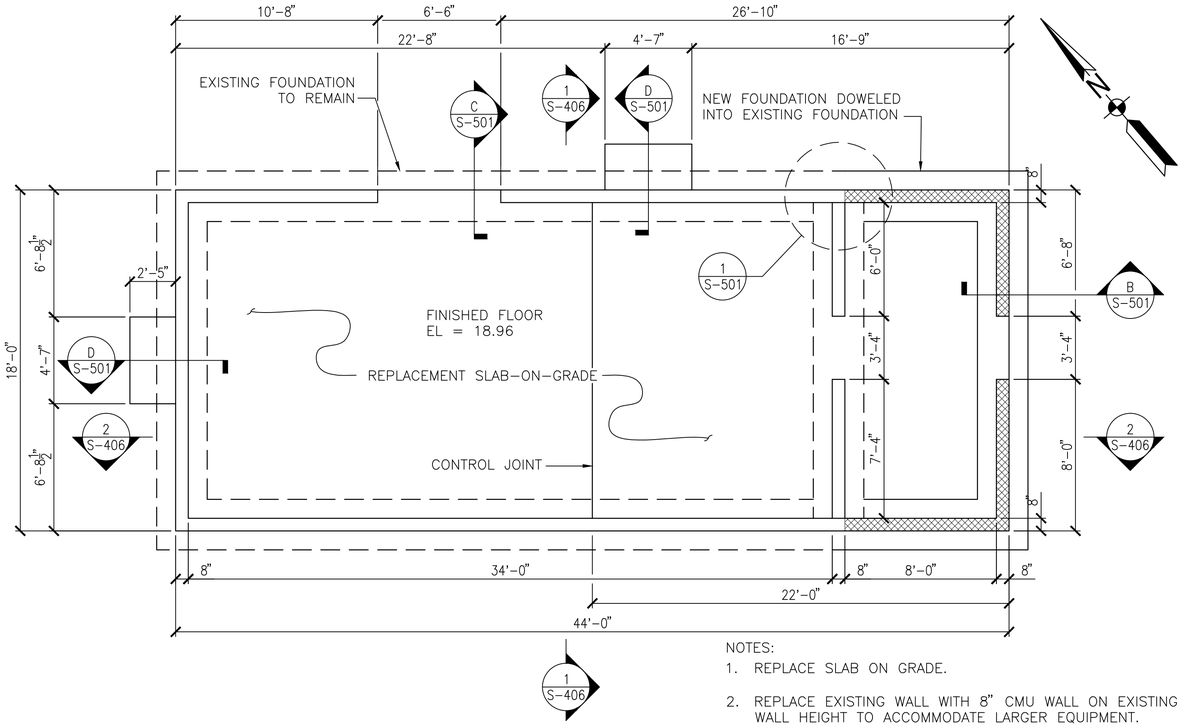

NOTES:

1. REPLACE SLAB ON GRADE.
2. REPLACE EXISTING WALL WITH 8" CMU WALL ON EXISTING FOUNDATION. INCREASE WALL HEIGHT TO ACCOMMODATE LARGER EQUIPMENT.
3. CONTRACTOR TO COORDINATE EQUIPMENT PEDESTAL DIMENSIONS AND LOCATION WITH MECHANICAL. MAINTAIN 6" MIN. CLEARANCE FROM EDGE OF EQUIPMENT.

VAULT E-3036 WALL AND FOUNDATION PLAN

SCALE: 1/4" = 1'-0"

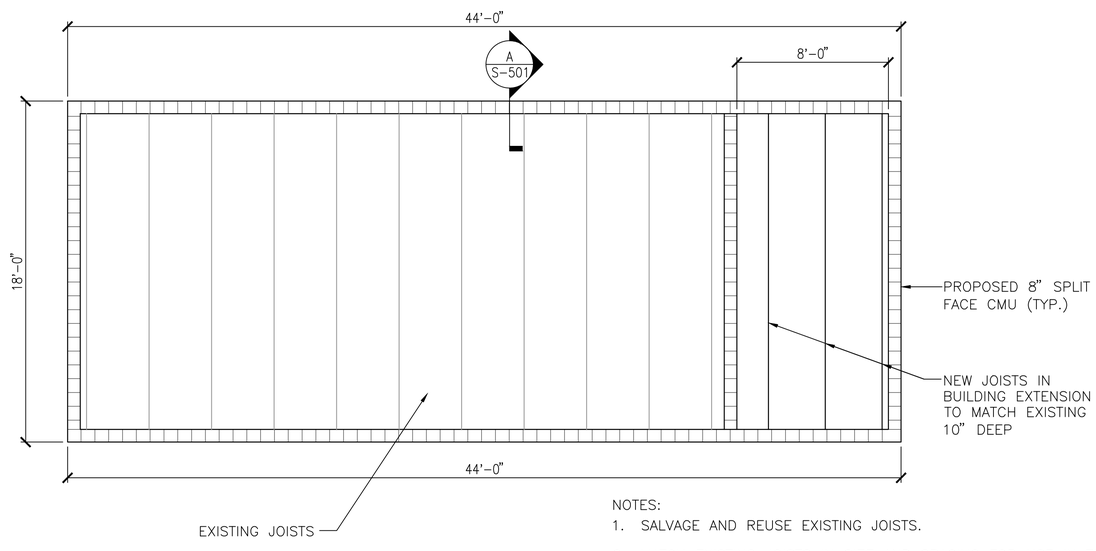

NOTES:

1. SALVAGE AND REUSE EXISTING JOISTS.
2. MATCH EXISTING JOISTS IN SIZE AND SPACING FOR USE IN THE EXTENSION TO THE VAULT.
3. REPLACE ROOF DECK AND ROOFING SYSTEM IN KIND.
4. CONTRACTOR SHALL FIELD VERIFY JOIST SIZE AND SPACING AND REPLACE AT SAME SPACING.

VAULT E-3036 ROOF PLAN

SCALE: 1/4" = 1'-0"

GENERAL SHEET NOTES

1. ALL WORK SHOWN ON THIS DRAWING TO BE COMPLETED UNDER PHASE 2.

KEY MAP C

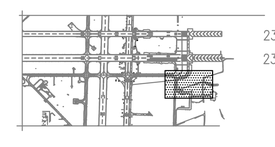

GRAPHIC SCALE

1/4"=1'-0"

1' 0 2' 4' 8'

SYM	DESCRIPTION	DATE	APPR

NAVFAC

Warren Barrett

COMMONWEALTH OF VIRGINIA
WARREN ARTHUR BARRETT II
Lic. No. 017260
PROFESSIONAL ENGINEER

SEAL

A/E INFO

APPROVED

FOR COMMANDER NAVFAC

ACTIVITY

SATISFACTORY TO DATE

DES SF DRW GMJ CHK DJM

PM/DM

BRANCH MANAGER

CHIEF ENG/ARCH

DEPARTMENT OF THE NAVY
NAVAL FACILITIES ENGINEERING COMMAND
HR IPT
NAVAL FACILITIES ENGINEERING COMMAND ~ MID-ATLANTIC
NAVAL AIR STATION OCEANA – VIRGINIA BEACH, VIRGINIA
NAVAL AIR STATION OCEANA
VIRGINIA BEACH, VIRGINIA
ENERGY AND RELIABILITY
MODERNIZATION OF AIRFIELD LIGHTING - PHASE 1 AND 2
VAULT E-3036 – FLOOR & ROOF PLAN

SCALE: 1/4" = 1'-0"

EPROJECT NO. 1291651

CONSTR. CONTR. NO.

NAVFAC DRAWING NO. 12691624

SHEET 91 OF 368

S-401

DRAWFORM REVISION: 10 MARCH 2009

H:\56427 NAS Oceana\Structural\Planset\Task 8\10-0863-008-S-401.dwg, 3/24/2015 9:10:11 AM, kjernigan
FILE NAME: H:\56427 NAS Oceana\Structural\Planset\Task 8\10-0863-008-S-401.dwg LAYOUT NAME: E-3036 PLOTTED: Tuesday, March 24, 2015 - 9:10am USER: kjernigan

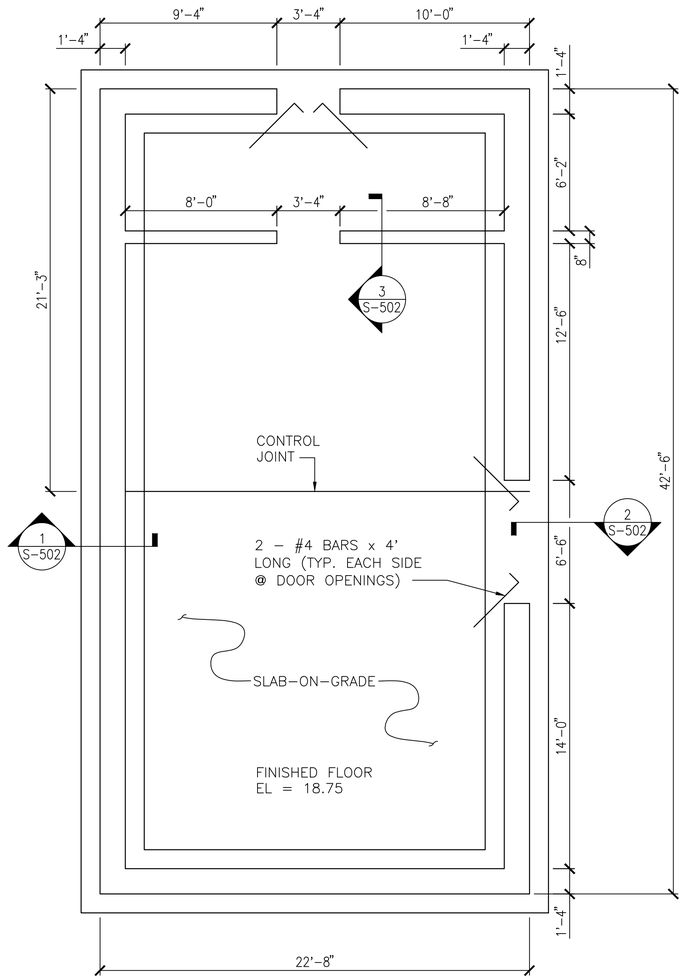

FOUNDATION, WALL, AND FLOOR SLAB PLAN (PHASE 2)

SCALE: 1/4" = 1'-0"

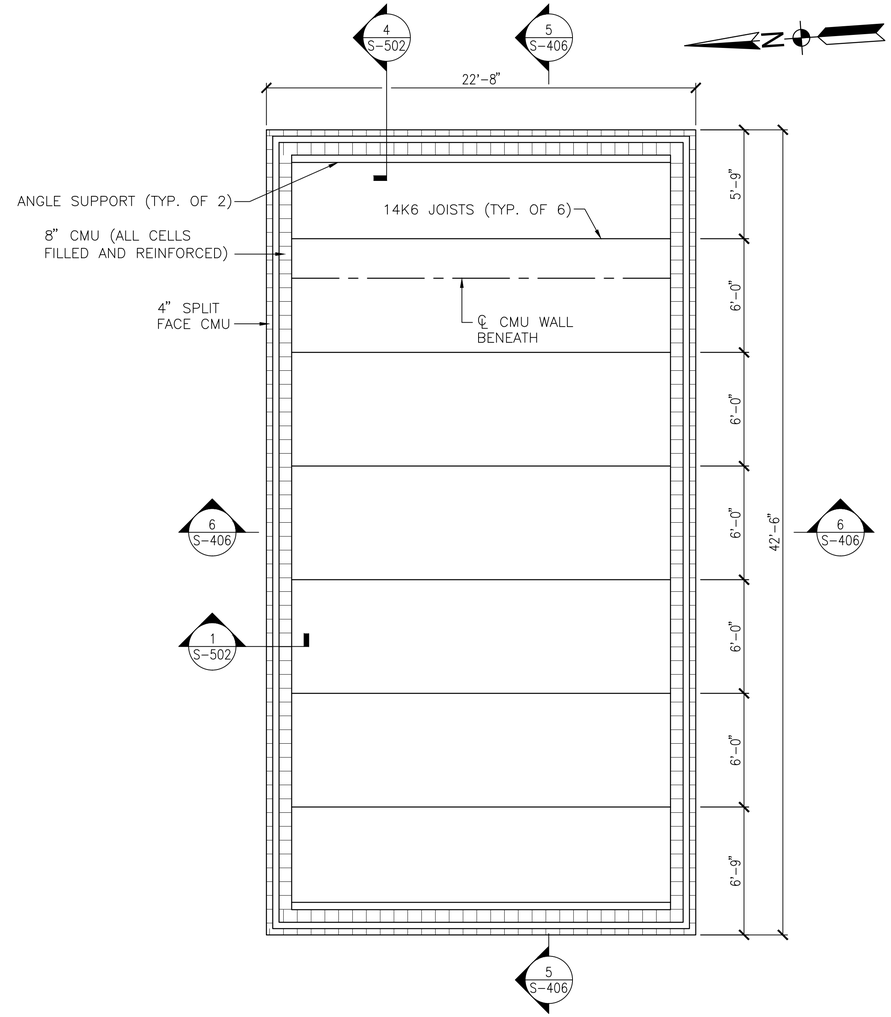

VAULT E-101 ROOF PLAN (PHASE 1)

SCALE: 1/4" = 1'-0"

KEY MAP C

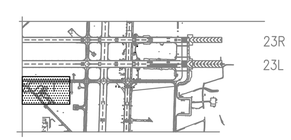

GRAPHIC SCALE

1/4"=1'-0"

1' 0 2' 4' 8'

SYM	DESCRIPTION	DATE	APPR

NAVFAC

Warren Barrett

COMMONWEALTH OF VIRGINIA
WARREN ARTHUR BARRETT II
Lic. No. 017260
PROFESSIONAL ENGINEER

SEAL

A/E INFO

APPROVED

FOR COMMANDER NAVFAC

ACTIVITY

SATISFACTORY TO DATE

DES SF DRW GMJ CHK DJM

PM/DM

BRANCH MANAGER

CHIEF ENG/ARCH

DEPARTMENT OF THE NAVY
NAVAL FACILITIES ENGINEERING COMMAND
HR IPT

NAVAL FACILITIES ENGINEERING COMMAND ~ MID-ATLANTIC
NAVAL AIR STATION OCEANA – VIRGINIA BEACH, VIRGINIA

NAVAL AIR STATION OCEANA
VIRGINIA BEACH, VIRGINIA

ENERGY AND RELIABILITY
MODERNIZATION OF AIRFIELD LIGHTING - PHASE 1 AND 2

VAULT E-101 – FLOOR & ROOF PLANS

SCALE: 1/4" = 1'-0"

EPROJECT NO.: 1291651

CONSTR. CONTR. NO.

NAVFAC DRAWING NO.
12691625

SHEET 92 OF 368

S-402

DRAWFORM REVISION: 10 MARCH 2009

FILE NAME: H:\56427 NAS Oceana\Structural\Planset\Task 8\10-0863-008-S-402.dwg LAYOUT NAME: E-101 PLOTTED: Tuesday, March 24, 2015 – 3:24pm USER: kjernigan

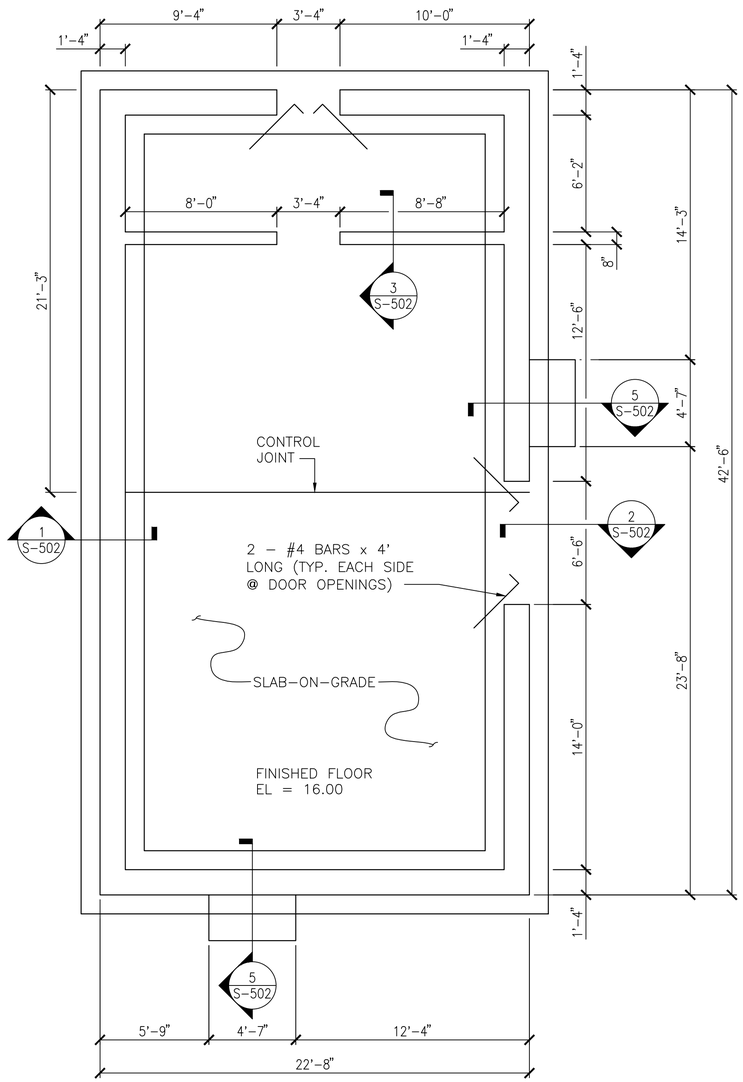

NOTES:

1. CONTRACTOR TO COORDINATE EQUIPMENT PEDESTAL DIMENSIONS AND LOCATION WITH MECHANICAL. MAINTAIN 6" MIN. CLEARANCE FROM EDGE OF EQUIPMENT.

FOUNDATION, WALL, AND FLOOR SLAB PLAN

SCALE: 1/4" = 1'-0"

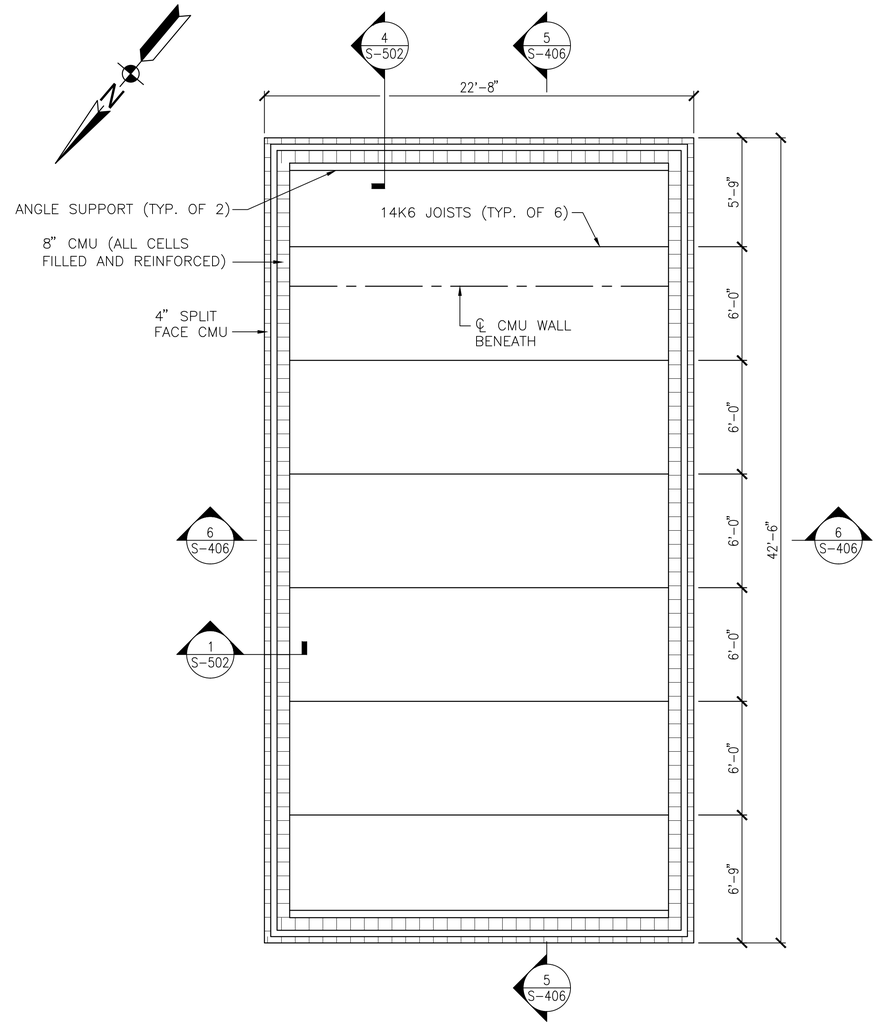

VAULT E-1120 ROOF PLAN

SCALE: 1/4" = 1'-0"

GENERAL SHEET NOTES

1. ALL WORK SHOWN ON THIS DRAWING TO BE COMPLETED UNDER PHASE 2.

KEY MAP B

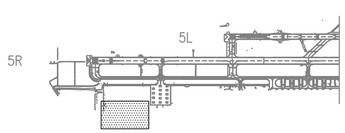

GRAPHIC SCALE

1/4"=1'-0"

1' 0 2' 4' 8'

SYM	DESCRIPTION	DATE	APPR

NAVFAC

Warren Barrett

COMMONWEALTH OF VIRGINIA
WARREN ARTHUR BARRETT II
Lic. No. 017260
PROFESSIONAL ENGINEER

SEAL

A/E INFO

APPROVED

FOR COMMANDER NAVFAC

ACTIVITY

SATISFACTORY TO DATE

DES SF DRW GMJ CHK DJM

PM/DM

BRANCH MANAGER

CHIEF ENG/ARCH

DEPARTMENT OF THE NAVY
NAVAL FACILITIES ENGINEERING COMMAND
HR IPT
NAVAL FACILITIES ENGINEERING COMMAND ~ MID-ATLANTIC
NAVAL AIR STATION OCEANA – VIRGINIA BEACH, VIRGINIA
NAVAL AIR STATION OCEANA
VIRGINIA BEACH, VIRGINIA
ENERGY AND RELIABILITY
MODERNIZATION OF AIRFIELD LIGHTING - PHASE 1 AND 2
VAULT E-1120 – FLOOR & ROOF PLANS

SCALE: 1/4" = 1'-0"

EPROJECT NO.: 1291651

CONSTR. CONTR. NO.

NAVFAC DRAWING NO.
12691626

SHEET 93 OF 388

S-403

DRAWFORM REVISION: 10 MARCH 2009

FILE NAME: H:\56427 NAS Oceana\Structural\Planset\Task 8\10-0863-008-S-403.dwg LAYOUT NAME: E-1200 PLOTTED: Tuesday, March 24, 2015 - 3:25pm USER: kjernigan

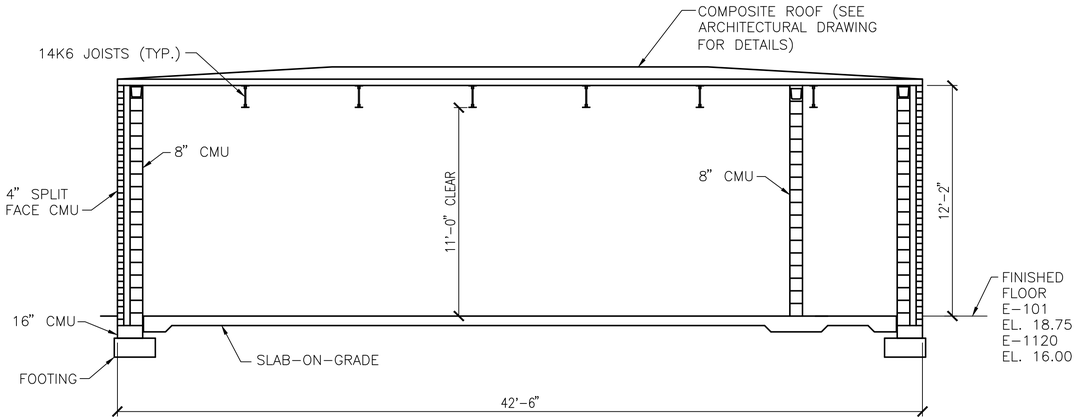

VAULT E-101 (PHASE 1) & E-1120 (PHASE 2) BUILDING - SECTION (5)
SCALE: 1/4"=1'-0" S-402

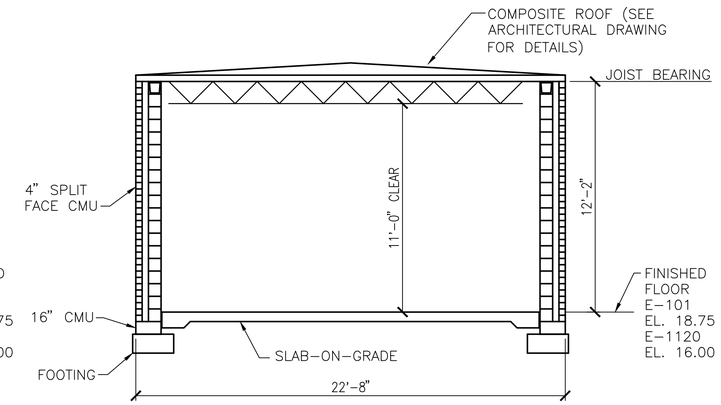

VAULT E-101 (PHASE 1) & E-1120 (PHASE 2) BUILDING - SECTION (6)
SCALE: 1/4"=1'-0" S-402

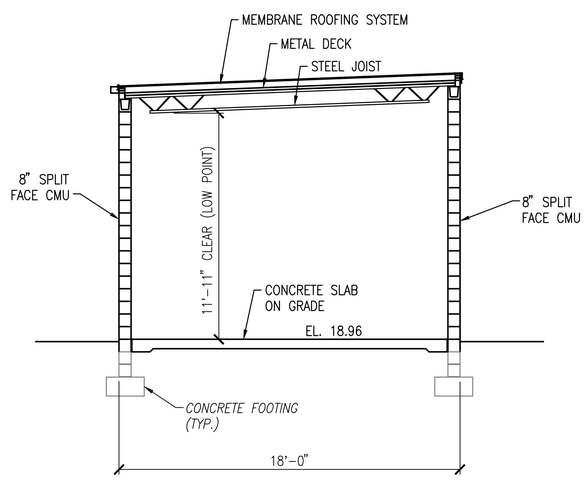

VAULT E-3036 (PHASE 2) BUILDING SECTION (1)
SCALE: 1/4" = 1'-0" S-401

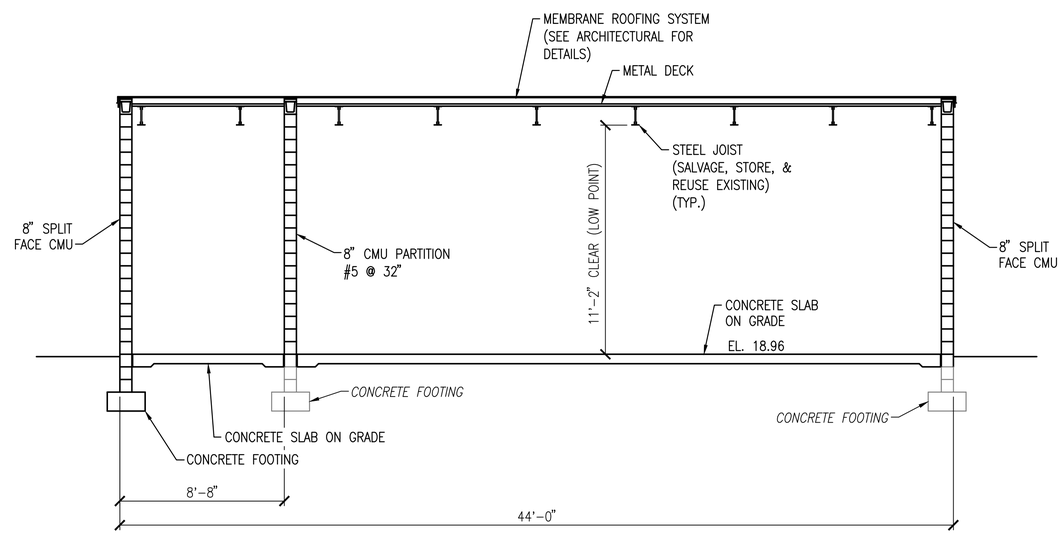

VAULT E-3036 (PHASE 2) BUILDING SECTION (2)
SCALE: 1/4" = 1'-0" S-401

GRAPHIC SCALE

1/4"=1'-0" 1' 0 2' 4' 8'

SYM	DESCRIPTION	DATE	APPR

NAVFAC

Warren Barrett
COMMONWEALTH OF VIRGINIA
WARREN ARTHUR BARRETT II
Lic. No. 017260
PROFESSIONAL ENGINEER
SEAL

A/E INFO
APPROVED
FOR COMMANDER NAVFAC
ACTIVITY
SATISFACTORY TO DATE
DES SF DRW GMJ CHK DJM
PM/DM
BRANCH MANAGER
CHIEF ENG/ARCH

DEPARTMENT OF THE NAVY
NAVAL FACILITIES ENGINEERING COMMAND
HR IPT
NAVAL FACILITIES ENGINEERING COMMAND – MID-ATLANTIC
NAVAL AIR STATION OCEANA – VIRGINIA BEACH, VIRGINIA
NAVAL AIR STATION OCEANA
VIRIGINIA BEACH, VIRGINIA
ENERGY AND RELIABILITY
MODERNIZATION OF AIRFIELD LIGHTING - PHASE 1 AND 2
VAULT E-101, E-3036, & E-1120 – BUILDING SECTION

SCALE: 1" = 1'-0"
EPROJECT NO.: 1291651
CONSTR. CONTR. NO.
NAVFAC DRAWING NO. 12691627
SHEET 94 OF 368
S-406
DRAWFORM REVISION: 10 MARCH 2009

FILE NAME: H:\56427 NAS Oceana\Structural\Planset\Task 8\10-0863-008-S-406.dwg LAYOUT NAME: E-101 & E-1200 PLOTTED: Tuesday, March 24, 2015 - 9:15am USER: kjernigan
H:\56427 NAS Oceana\Structural\Planset\Task 8\10-0863-008-S-406.dwg, 3/24/2015 9:15:10 AM, kjernigan

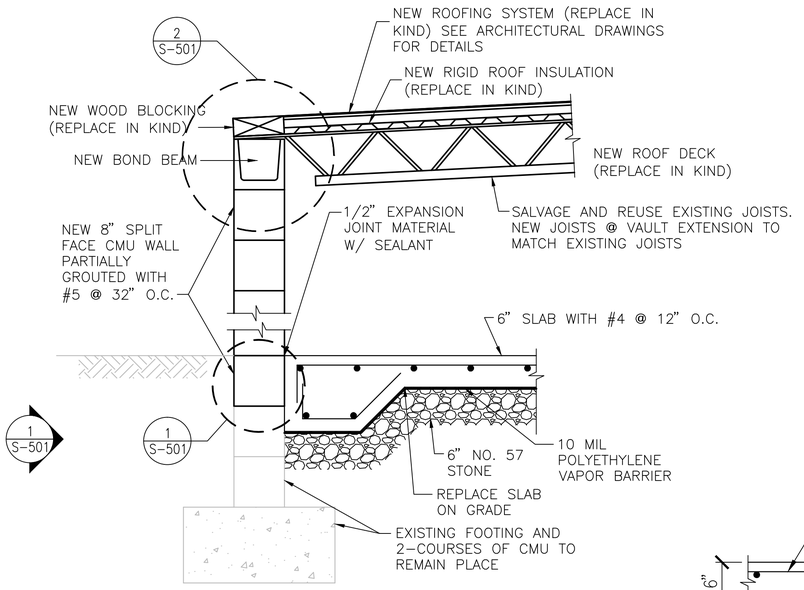

NOTES:
1. NEW FOOTING AT BUILDING EXTENSION SHALL MATCH EXISTING FOOTING.
2. CONTRACTOR SHALL FIELD MEASURE EXISTING JOISTS.
3. EXISTING JOIST SHALL BE SALVAGED AND STORED FOR REUSE.
4. NEW JOISTS TO BE PLACED AT THE BUILDING EXTENSION SHALL MATCH THE EXISTING BUILDING JOISTS.

VAULT E-3036 BUILDING SECTION (A)
SCALE: 1"=1'-0" S-401

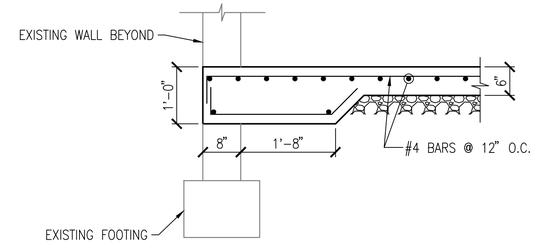

SECTION (C)
SCALE: 1"=1'-0" S-401

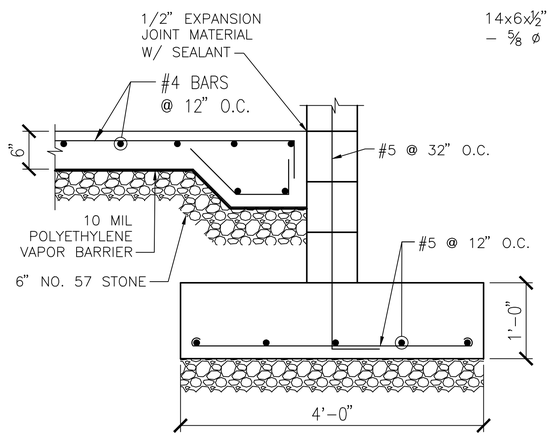

SECTION (B)
SCALE: 1"=1'-0" S-401

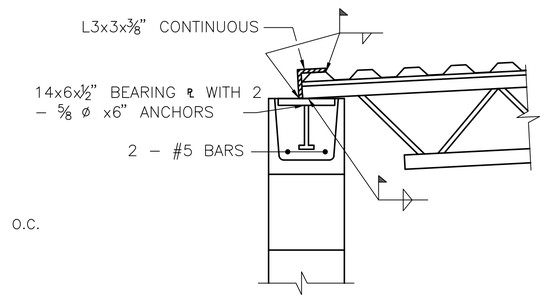

DETAIL (2)
SCALE: 1"=1'-0" S-501

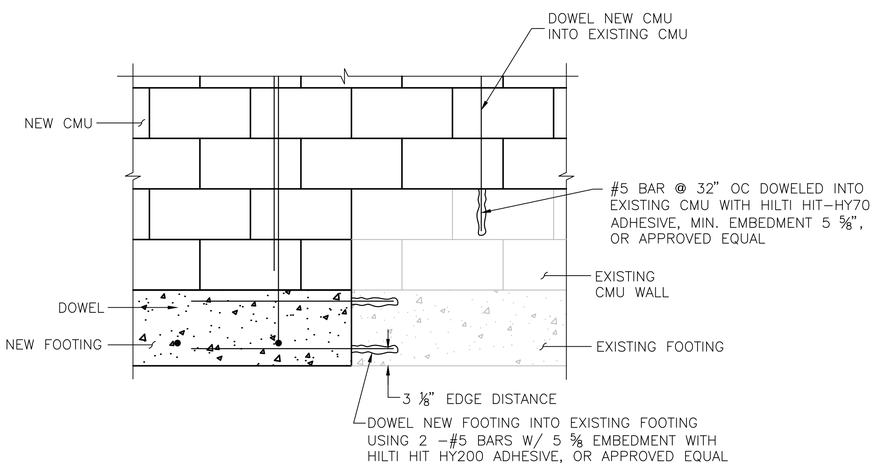

DETAIL (1)
SCALE: 1"=1'-0" S-401, S-501

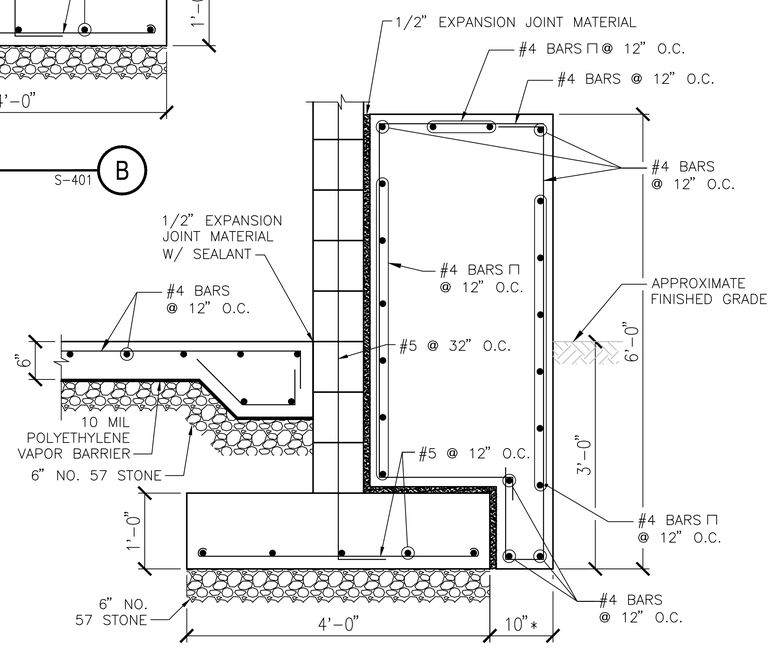

* CONTRACTOR TO COORDINATE DIMENSIONS WITH MECHANICAL. PROVIDE 6" MIN. CLEARANCE FROM EDGE OF EQUIPMENT.

SECTION (D)
SCALE: 1"=1'-0" S-401

GENERAL SHEET NOTES

1. THE WORK SHOWN ON THIS DRAWING IS COMMON TO BOTH PHASE 1 AND PHASE 2.

GRAPHIC SCALE

1/4"=1'-0"

1' 0 2' 4' 8'

SYM	DESCRIPTION	DATE	APPR

NAVFAC

Warren Barrett
COMMONWEALTH OF VIRGINIA
WARREN ARTHUR BARRETT II
Lic. No. 017260
PROFESSIONAL ENGINEER
SEAL

A/E INFO

APPROVED

FOR COMMANDER NAVFAC

ACTIVITY

SATISFACTORY TO DATE

DES SF DRW GMJ CHK DJM

PM/DM

BRANCH MANAGER

CHIEF ENG/ARCH

DEPARTMENT OF THE NAVY
NAVAL FACILITIES ENGINEERING COMMAND
NAVAL FACILITIES ENGINEERING COMMAND ~ MID-ATLANTIC
NAVAL AIR STATION OCEANA ~ VIRGINIA BEACH, VIRGINIA
HR IPT
NAVAL AIR STATION OCEANA VIRGINIA BEACH, VIRGINIA
ENERGY AND RELIABILITY
MODERNIZATION OF AIRFIELD LIGHTING - PHASE 1 AND 2
VAULT E-3036 - SECTION & DETAIL

SCALE: 1" = 1'-0"
EPROJECT NO.: 1291651
CONSTR. CONTR. NO.
NAVFAC DRAWING NO. 12691628
SHEET 95 OF 368
S-501

DRAWFORM REVISION: 10 MARCH 2009

FILE NAME: H:\56427 NAS Oceana\Structural\Planset\Task 8\10-0863-008-S-501.dwg LAYOUT NAME: E-3036 PLOTTED: Tuesday, March 24, 2015 - 9:16am USER: kjernigan

H:\56427 NAS Oceana\Structural\Planset\Task 8\10-0863-008-S-501.dwg, 3/24/2015 9:16:13 AM, kjernigan

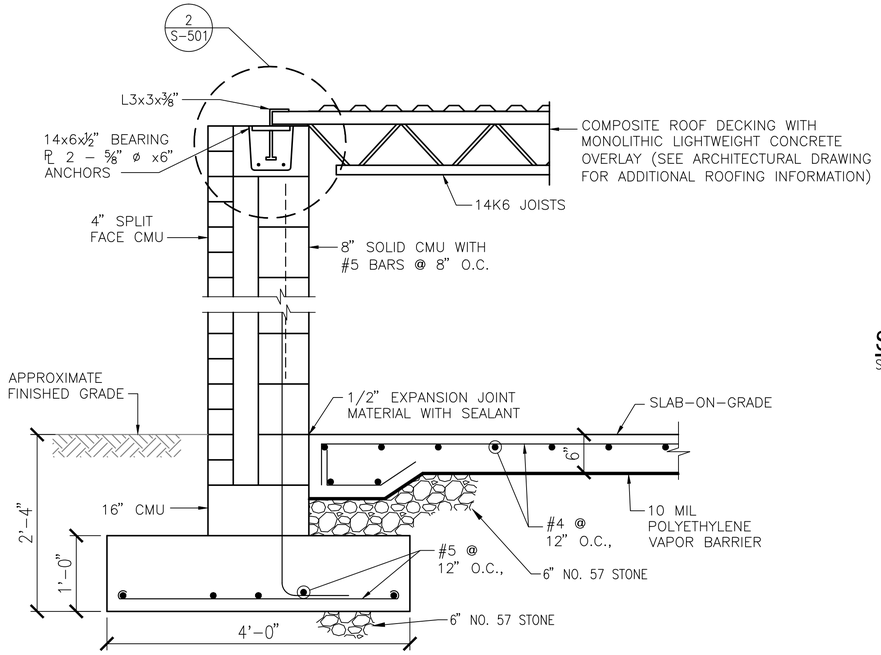

VAULT E-101 & E-1120 BUILDING SECTION (1)

SCALE: 1"=1'-0" S-402, S-403

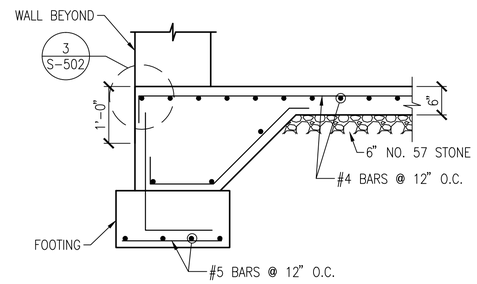

SECTION (2)

SCALE: 3/4"=1'-0" S-402, S-403

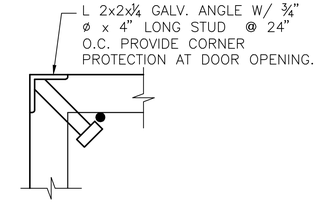

DETAIL (3)

SCALE: 3/4"=1'-0" S-502

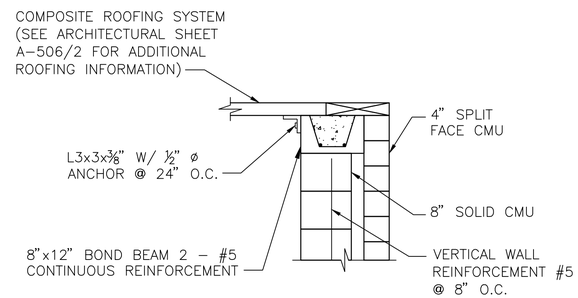

SECTION (4)

SCALE: 3/4"=1'-0" S-402, S-403

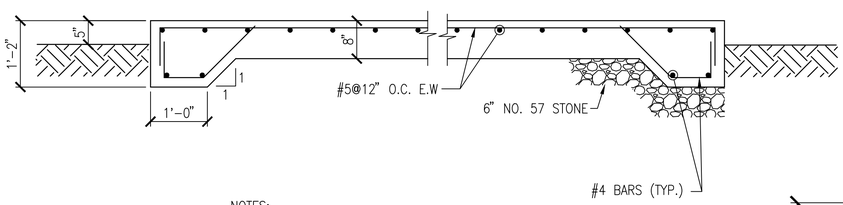

NOTES:

1. EQUIPMENT SLABS SHALL BE SIZED TO EXTEND 1'-0" BEYOND THE FOOTPRINT OF THE EQUIPMENT ON ALL SIDES.
2. SLAB-ON-GRADE SHALL BE PLACED ON 6" THICK #57 STONE.

TYPICAL SECTION - EQUIPMENT SLAB

SCALE: 3/4"=1'-0"

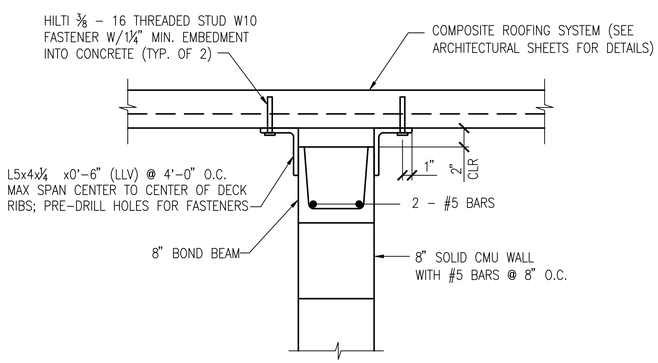

SECTION (3)

SCALE: 1"=1'-0" S-402, S-403

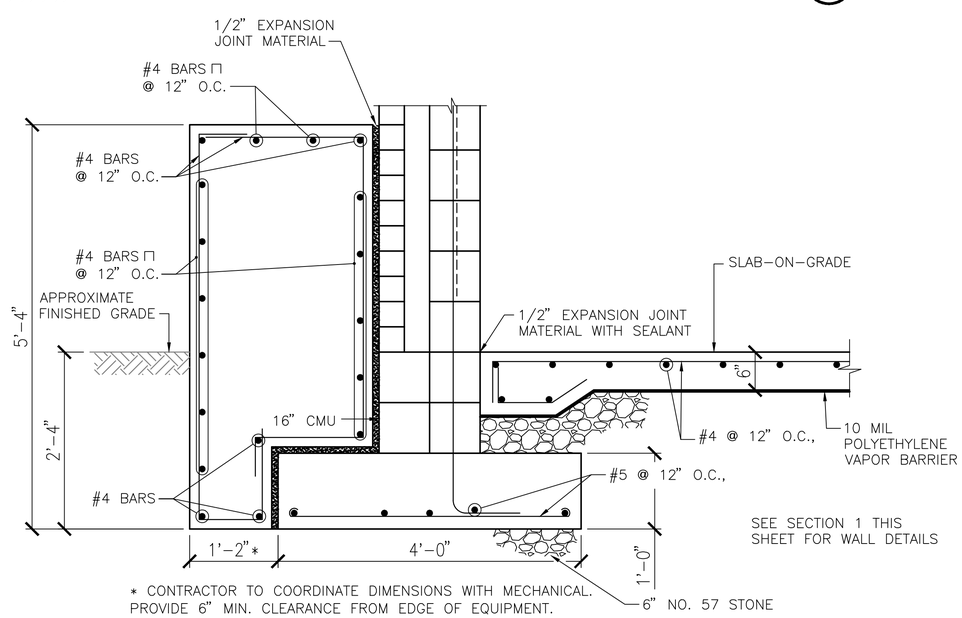

* CONTRACTOR TO COORDINATE DIMENSIONS WITH MECHANICAL. PROVIDE 6" MIN. CLEARANCE FROM EDGE OF EQUIPMENT.

SECTION (5)

SCALE: 1"=1'-0" S-403

GENERAL SHEET NOTES

1. THE WORK SHOWN ON THIS DRAWING IS COMMON TO BOTH PHASE 1 AND PHASE 2.

GRAPHIC SCALE

1/4"=1'-0"

1' 0 2' 4' 8'

SYM	DESCRIPTION	DATE	APPR

NAVFAC

Warren Barrett
COMMONWEALTH OF VIRGINIA
WARREN ARTHUR BARRETT II
Lic. No. 017260
PROFESSIONAL ENGINEER
SEAL

A/E INFO

APPROVED

FOR COMMANDER NAVFAC

ACTIVITY

SATISFACTORY TO DATE

DES SF DRW GMJ CHK DJM

PM/DM

BRANCH MANAGER

CHIEF ENG/ARCH

DEPARTMENT OF THE NAVY
NAVAL FACILITIES ENGINEERING COMMAND ~ MID-ATLANTIC
HR IPT
NAVAL FACILITIES ENGINEERING COMMAND
NAVAL AIR STATION OCEANA – VIRGINIA BEACH, VIRGINIA
NAVAL AIR STATION OCEANA
VIRGINIA BEACH, VIRGINIA
ENERGY AND RELIABILITY
MODERNIZATION OF AIRFIELD LIGHTING - PHASE 1 AND 2
VAULT E-101 & E-1120 – BUILDING SECTION

SCALE: 1" = 1'-0"

EPROJECT NO.: 1291651

CONSTR. CONTR. NO.

NAVFAC DRAWING NO. 12691629

SHEET 96 OF 368

S-502

DRAWFORM REVISION: 10 MARCH 2009

FILE NAME: H:\56427 NAS Oceana\Structural\Planset\Task 8\10-0863-008-S-502.dwg LAYOUT NAME: E-101 & E-1200 PLOTTED: Tuesday, March 24, 2015 – 3:36pm USER: kjernigan

ARCHITECTURAL LEGEND

- BRICK
- CMU
- ACOUSTICAL CMU
- CMIU
- SGFT / GLAZED CMU
- CONCRETE
- GYP BD / GROUT
- BATT INSULATION
- RIGID INSULATION
- COARSE AGGREGATE /BALLAST
- STEEL
- ALUMINUM
- FINISH LUMBER
- DIMENSIONAL LUMBER
- SHIM
- PLYWOOD
- ACOUSTICAL PANEL
- TILE
- EARTH
- (3) DOOR NUMBER REFERENCE
- [101] ROOM NUMBER REFERENCE
- L-2 LINTEL TYPE REFERENCE
- LV10 LOUVER TYPE REFERENCE
- 6 / A-501 – SECTION REFERENCE – DRAWING ON WHICH SECTION APPEARS
- 4 / A-501 – ELEVATION REFERENCE – DRAWING ON WHICH ELEVATION APPEARS
- BRACKET MOUNTED FIRE EXTINGUSHER
- LARGE SCALE REFERENCE

ABBREVIATIONS

ABV	ABOVE
AC	AIR CONDITIONER
ACST	ACOUSTIC
ADDL	ADDITIONAL
ADJ	ADJACENT
AFF	ABOVE FINISH FLOOR
AGGR	AGGREGATE
AL	ALUMINUM
ALT	ALTERNATE
ARCH	ARCHITECTURAL
ASB	ASBESTOS
ASPH	ASPHALT
ASPHRS	ASPHALT ROOF SHINGLES
ASSN	ASSOCIATION
ASST	ASSISTANT
ASSY	ASSEMBLY
AVE	AVENUE
AVG	AVERAGE
BALC	BALCONY
BD	BOARD
BETW	BETWEEN
BLDG	BUILDING
BLKG	BLOCKING
BLR	BOILER
BM	BEAM
BM	BENCHMARK
BOT	BOTTOM
BP	BASE PLATE
BRDG	BRIDGING
BRG	BEARING
BS	BOTH SIDES
BSMT	BASEMENT
CAB	CABINET
CAP	CAPACITY
CARP	CARPET
CDR	COILING DOOR
CER	CERAMIC
CER TILE	CERAMIC TILE
CI	CAST IRON
CIP	CAST-IRON PIPE
CJ	CONTROL JOINT
CL	CENTERLINE
CLG	CEILING
CLO	CLOSET
CLR	CLEAR
CMIU	CONCRETE MASONRY INSULATED UNIT
CMU	CONCRETE MASONRY UNIT
CNCL	CONCEALED
CO	CLEANOUT
CO	COMPANY
COL	COLUMN
COMP	COMPOSITION
CONC	CONCRETE
CONSTR	CONSTRUCTION
CONT	CONTINUOUS
CONTR	CONTRACTOR
CRV	CURVED
CSK	COUNTERSINK
CTD	COATED
CTR	CENTER
CUH	CABINET UNIT HEATER
D	DEPTH
DBL	DOUBLE
DEG	DEGREE
DEPT	DEPARTMENT
DET	DETAIL
DGL	DIAGONAL
DIA	DIAMETER
DIM	DIMENSION
DIV	DIVISION
DL	DEAD LOAD
DMPF	DAMPPROOFING
DN	DOWN
DPN	DEMOUNTABLE PARTITION MANUFACTURER
DR	DOOR
DS	DOWNSPOUT
DW	DISHWASHER
DWG	DRAWING
E	EAST
EA	EACH
EGEN	EMERGENCY GENERATOR
EF	EXHAUST FAN
EIFS	EXTERIOR INSULATION & FINISH SYSTEM
EL	ELEVATION
ELEC	ELECTRICAL
ELEV	ELEVATOR
ENTR	ENTRANCE
EQ	EQUAL
EQUIP	EQUIPMENT
EWC	ELECTRIC WATER COOLER
EXH	EXHAUST
EXIST	EXISTING
EXP	EXPANSION
EXP JT	EXPANSION JOINT
EXT	EXTERIOR
FAB	FABRICATE
FBD	FIBERBOARD
FD	FLOOR DRAIN
FDN	FOUNDATION
FDR	FIRE DOOR
FE	FIRE EXTINGUISHER
FEC	FIRE EXTINGUISHER & CABINET
FHY	FIRE HYDRANT
FIN	FINISH
FL	FLASHING
FLEX	FLEXIBLE
FLG	FLANGE
FLR	FLOOR
FLRG	FLOORING
FP	FIREPROOF
FRP	FIBERGLASS-REINFORCED PLASTICS
FT	FOOT
FTG	FOOTING
FURN	FURNITURE
GA	GAUGE
GALV	GALVANIZED
GAR	GARAGE
GEN	GENERATOR
GL	GLASS
GLU-LAM	GLUE-LAMINATED
GOVT	GOVERNMENT
GR	GRADE
GRD	GROUND
GVL	GRAVEL
GWB	GYPSUM WALLBOARD
GYP	GYPSUM
H	HIGH
HDWE	HARDWARE
HM	HOLLOW METAL
HMD	HOLLOW METAL DOOR
HORIZ	HORIZONTAL
HPT	HIGH POINT
HT	HEIGHT
HTR	HEATER
HVAC	HEATING, VENTILATING, & AIR CONDITIONING
ID	INSIDE DIAMETER
IE	THAT IS
IH	INTAKE HOOD
INSUL	INSULATION
INTR	INTERIOR
JST	JOIST
JT	JOINT
LAB	LABORATORY
LAM	LAMINATE
LAV	LAVATORY
LG	LENGTH
LH	LEFT HAND
LIB	LIBRARY
LIN	LINEAR
LL	LIVE LOAD
LLH	LONG LEG HORIZONTAL
LLV	LONG LEG VERTICAL
LPT	LOW POINT
LT	LIGHT
LWC	LIGHTWEIGHT CONCRETE
MAINT	MAINTENANCE
MAS	MASONRY
MATL	MATERIAL
MAX	MAXIMUM
MECH	MECHANICAL
MEMB	MEMBRANE
MEZZ	MEZZANINE
MFR	MANUFACTURER
MGR	MANAGER
MH	MANHOLE
MIL	MILITARY
MIN	MINIMUM
MISC	MISCELLANEOUS
MET	METAL
ML	METAL LATH
MLDG	MOLDING
MLP	METAL LATH AND PLASTER
MO	MASONRY OPENING
MOD	MOTOR OPERATED DAMPER
MTG	MOUNTING
N	NORTH
NA	NOT APPLICABLE
NIC	NOT IN CONTRACT
NO	NUMBER
NRC	NOISE-REDUCTION COEFFICIENT
NTS	NOT TO SCALE
OA	OVERALL
OC	ON CENTER
OD	OUTSIDE DIAMETER
OFF	OFFICE
OH	OPPOSITE HAND
OHDR	OVERHEAD DOOR
OPNG	OPENING
OPP	OPPOSITE
OSB	ORIENTED STRAND BOARD
P/L	PROPERTY LINE
PASS	PASSENGER
PEB	PRE-ENGINEERED BUILDING
PERF	PERFORATED
PL	PLATE
PLAS	PLASTER
PLBG	PLUMBING
PLYWD	PLYWOOD
PNL	PANEL
PNT	PAINT
PORC	PORCELAIN
PR	PAIR
PREFAB	PREFABRICATED
PROJ	PROJECT
PSF	POUNDS PER SQUARE FOOT
PSI	POUNDS PER SQUARE INCH
PT	POINT
PTD	PAINTED
PTN	PARTITION
PVC	POLYVINYL CHLORIDE
QTF	QUARRY-TILE FLOOR
R	RADIUS
R	RISER
RD	ROOF DRAIN
REFR	REFRIGERATOR
REINF	REINFORCE
REQD	REQUIRED
RET	RETURN
REV	REVISION
REG	REGISTER
RFG	ROOFING
RH	RIGHT HAND
RM	ROOM
RWC	RAIN WATER CONDUCTOR
S	SOUTH
SAPC	SUSPENDED ACOUSTICAL PANEL CEILING
SCHED	SCHEDULE
SDG	SIDING
SEC	SECTION
SF	SQUARE FOOT
SGFT	STRUCTURAL GLAZED FACING TILE
SH	SHOWER
SHM	SECURITY HOLLOW METAL
SHT	SHEET
SI	INTERNATIONAL SYSTEM OF UNITS
SIM	SIMILAR
SKY	SKYLIGHT
SLDR	SLIDING DOOR
SMLS	SEAMLESS
SPEC	SPECIFICATION
SPKLR	SPRINKLER
SPKR	SPEAKER
SQ	SQUARE
SS	STAINLESS STEEL
ST	STAINED
STD	STANDARD
STL	STEEL
STOR	STORAGE
STRUCT	STRUCTURE/STRUCTURAL
STWY	STAIRWAY
SUPT	SUPERINTENDENT
SUPVR	SUPERVISOR
SURF	SURFACE
SUSP	SUSPENDED/SUSPENSION
SYS	SYSTEM
T	TREAD
T/	TOP OF
T&B	TOP AND BOTTOM
T&G	TONGUE AND GROOVE
TAN	TANGENT
TDD	TELECOMMUNICATION DISPLAY DEVICE
TEL	TELEPHONE
TEMP	TEMPERED
TER	TERRAZZO
THRU	THROUGH
TLT	TOILET
TRTD	TREATED
TYP	TYPICAL
UNO	UNLESS NOTED OTHERWISE
VAT	VINYL ASBESTOS TILE
VCT	VINYL COMPOSITION TILE
VERT	VERTICAL
VIF	VERIFY IN FIELD
VTR	VENT THRU ROOF
W	WEST
W	WIDE
W/	WITH
W/O	WITHOUT
WBD	WALLBOARD
WC	WATER CLOSET
WD	WOOD
WDR	WOOD DOOR
WH	WATER HEATER
WTRPRF	WATERPROOFING
WWF	WELDED WIRE FABRIC
XFMR	TRANSFORMER

GENERAL NOTES

1. NOT ALL SYMBOL DEPICTED ON THIS DRAWING ARE USED IN THE ARCHITECTURAL DRAWINGS.
2. VERIFY ALL DIMENSIONS IN THE FIELD.
3. VERIFY ALL FIELD CONDITIONS.
4. ALL MASONRY DIMENSIONS ARE NOMINAL UNLESS NOTED OTHERWISE.
5. ALL WORK WILL BE COMPLETED IN ACCORDANCE WITH THE LATEST VERSIONS OF I.B.C. AND LIFE SAFETY CODES.
6. DO NOT SCALE DRAWINGS FOR PURPOSES OF CONSTRUCTION.
7. ANY DEVIATION FROM, OR IN FIELD ALTERATION TO THESE DRAWINGS, AND SPECIFICATIONS IS STRICTLY PROHIBITED WITHOUT PRIOR APPROVAL OF C.O.R. ANY SUCH ALTERATIONS SHALL BE CORRECTED AT ONCE, WITH NO EXPENSE TO THE OWNER.
8. THE CONTRACTOR SHALL BE RESPONSIBLE FOR COORDINATING THE WORK OF ALL TRADES REGARDLESS OF DISCREPENCIES IN THE CONTRACT DOCUMENTS. NO ADDITIONAL COSTS WILL BE PAID BY THE OWNER TO RECTIFY WORK TO BE RELOCATED DUE TO LACK OF JOBSITE COORDINATION.
9. DEMOLITION, CUTTING, AND PATCHING OF ANYTHING REQUIRED TO CONSTRUCT THE PROJECT IS HEREIN MADE A PART OF THESE DOCUMENTS.
10. THE CONTRACTOR SHALL SECURE AND PAY FOR ALL PERMITS.
11. EXISTING TO REMAIN IS SHOWN IN GRAY LINE COLOR. THE NEW WORK AND REQUIRED DEMOLITION ARE SHOWN IN BLACK LINE COLOR. IF THE DIFFERENCE IS NOT OBVIOUS, REPORT TO THE ARCHITECT IMMEDIATELY.
12. ALL WORK INDICATED OR SHOWN GRAPHICALLY AS "EXISTING TO REMAIN" WILL BE THE CONTRACTOR'S RESPONSIBILITY TO WORK AROUND WITHOUT DISTURBING. IF DISTURBED, THE CONTRACTOR WILL REPLACE AT NO ADDITIONAL COST TO THE OWNER.

SYM	DESCRIPTION	DATE	APPR

NAVFAC

James R. Schneider
COMMONWEALTH OF VIRGINIA
JAMES ROBERT SCHNEIDER
Lic. No. 0401 011031
ARCHITECT
SEAL

A/E INFO

APPROVED

FOR COMMANDER NAVFAC

ACTIVITY

SATISFACTORY TO DATE

DES DRE | DRW DRE | CHK JRS

PM/DM

BRANCH MANAGER

CHIEF ENG/ARCH

DEPARTMENT OF THE NAVY
NAVAL FACILITIES ENGINEERING COMMAND
HR IPT
NAVAL FACILITIES ENGINEERING COMMAND – MID-ATLANTIC
NAVAL AIR STATION OCEANA – VIRGINIA BEACH, VIRGINIA
NAVAL AIR STATION OCEANA
VIRGINIA BEACH, VIRGINIA
ENERGY AND RELIABILITY
MODERNIZATION OF AIRFIELD LIGHTING - PHASE 1 AND 2
ARCHITECTURAL LEGEND, ABBREVIATIONS, AND NOTES

SCALE: NONE
EPROJECT NO.: 1291651
CONSTR. CONTR. NO.
NAVFAC DRAWING NO. 12691630
SHEET 97 OF 368
A-001

DRAWFORM REVISION: 10 MARCH 2009

FILE NAME: H:\56427 NAS Oceana\Architectural\Phase1\Task 008\10-0863-008-A-001.dwg LAYOUT NAME: A-001 PLOTTED: Tuesday, March 24, 2015 - 9:59am USER: kjernigan

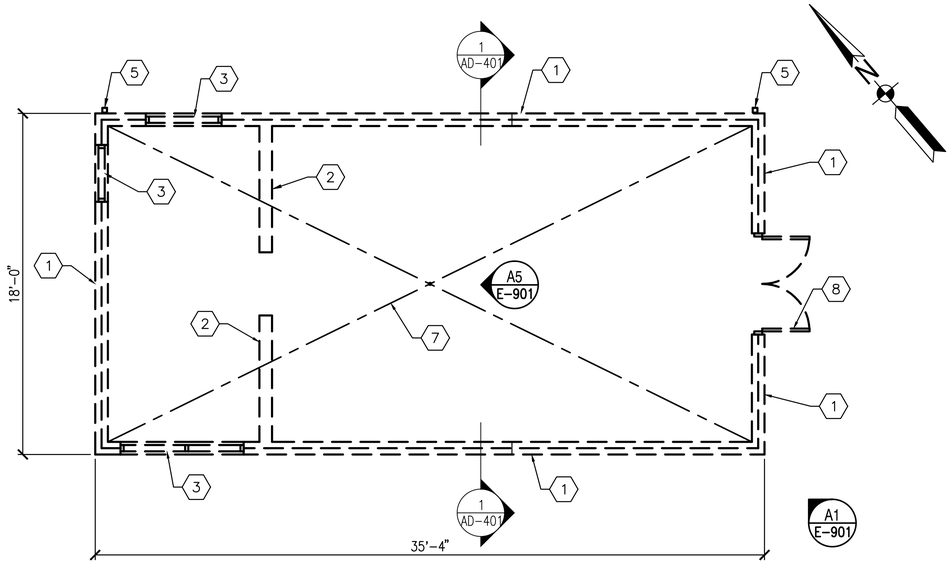

VAULT E-3036 DEMOLITION FLOOR PLAN

SCALE: 1/4"=1'-0"

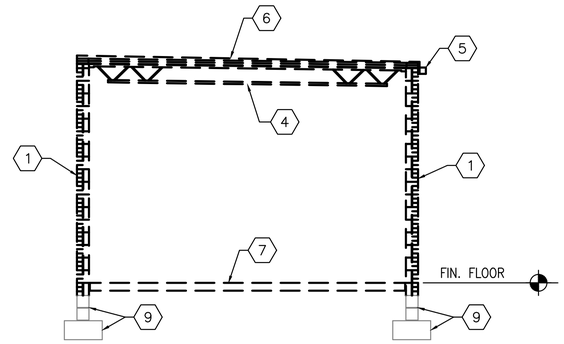

VAULT E-3036 DEMOLITION SECTION 1

SCALE: 1/4"=1'-0" AD-401

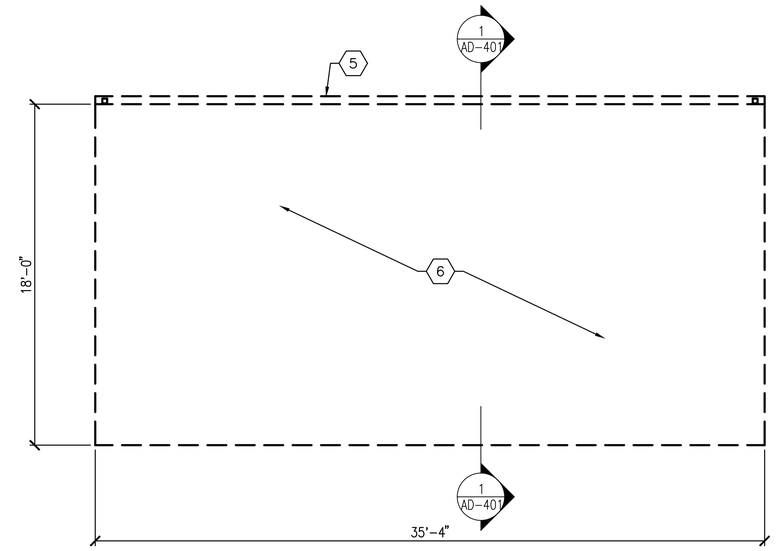

VAULT E-3036 DEMOLITION ROOF PLAN

SCALE: 1/4"=1'-0"

GENERAL DEMOLITION NOTES

1. PRIOR TO DEMOLITION, VERIFY EXISTING CONDITIONS.
2. PRIOR TO DEMOLITION, VERIFY MATERIALS AND EQUIPMENT TO BE SALVAGED.
3. REMOVE ALL RUBBISH AND DEMOLITION DEBRIS FROM THE SITE AND DISPOSE OF IN A LAWFUL MANNER.
4. COORDINATE GENERAL CONSTRUCTION DEMOLITION WITH THE MECHANICAL AND ELECTRICAL DEMOLITION WORK.
5. PROVIDE TEMPORARY LINTELS OR STRUCTURAL SUPPORT FOR OPENINGS CREATED BY THE DEMOLITION WORK AND MAINTAIN SUCH SUPPORTS UNTIL PERMANENT STRUCTURAL SUPPORTS ARE INSTALLED.
6. PROVIDE TEMPORARY STRUCTURAL SUPPORT FOR FLOORS, WALLS, AND ROOFS AS REQUIRED DURING DEMOLITION WORK AND MAINTAIN SUCH SUPPORTS UNTIL PERMANENT STRUCTURAL SUPPORTS ARE INSTALLED.
7. REPAIR ALL EXISTING STRUCTURES, UTILITIES, AND EQUIPMENT, SCHEDULED TO REMAIN, WHICH ARE DAMAGED DURING DEMOLITION OPERATIONS.
8. ALL WORK SCHEDULED TO BE DEMOLISHED, WILL BE REMOVED COMPLETLY INCLUDING ALL FASTENERS, ATTACHMENTS, ACCESSORIES, OR ANY RELATED WORK.
9. ALL SURFACES TO REMAIN SHALL BE REFINISHED TO REPAIR ALL HOLES, SCRATCHES, DENTS, MARS, PITTING, BAD JOINTS, DEFECTIVE CMU, ETC. TO BE ACCEPTABLE IN EVERY WAY TO RECEIVE NEW FINISHES.
10. DEMOLITION INCLUDES ALL ITEMS WHETHER OR NOT SHOWN ON THE DRAWINGS, THAT ARE REQUIRED TO BE REMOVED IN ORDER TO INSTALL THE NEW WORK SHOWN ON DRAWINGS AND OTHER PORTIONS OF THE CONTRACT DOCUMENTS.
11. ANY DEMOLITION SHOWN AS DASHED LINES WILL BE REMOVED WHETHER OR NOT SPECIFIC NOMENCLATURE IS CORRECT OR NOT SHOWN ON DRAWINGS.
12. ALL WORK SHOWN ON THIS DRAWING TO BE COMPLETED UNDER PHASE 2.

DEMOLITION KEYNOTES

1. REMOVE COMPLETE MASONRY WALL ASSEMBLY AND ACCESSORIES DOWN TO FOUNDATION WALL.
2. REMOVE CMU PARTITION.
3. REMOVE LOUVER AND ACCESSORIES.
4. REMOVE AND SALVAGE STEEL JOISTS TO BE REINSTALLED.
5. REMOVE METAL GUTTER AND DOWNSPOUT.
6. REMOVE MODIFIED BITUMINOUS MEMBRANE ROOFING SYSTEM AND ACCESSORIES INCLUDING BUT NOT LIMITED TO THE ROOF DECK, INSULATION, FASCIA, FLASHING AND WOOD BLOCKING.
7. REMOVE CONCRETE SLAB ON GRADE.
8. REMOVE HOLLOW METAL DOOR AND FRAME, INCLUDING ANY ANCHORS, FASTENERS, ATTACHMENTS AND RELATED ACCESSORIES.
9. FOOTING AND CMU FOUNDATION WALL TO REMAIN. SEE STRUCTURAL DRAWINGS.

KEY MAP C

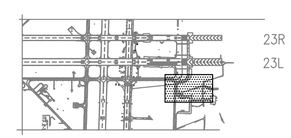

GRAPHIC SCALE

1/4"=1'-0"

1' 0 2' 4' 8'

SYM	DESCRIPTION	DATE	APPR

NAVFAC

James Schneider
COMMONWEALTH OF VIRGINIA
JAMES ROBERT SCHNEIDER
Lic. No. 0401 011031
ARCHITECT

A/E INFO

APPROVED

FOR COMMANDER NAVFAC

ACTIVITY

SATISFACTORY TO DATE

DES DRE DRW DRE CHK JRS

PM/DM

BRANCH MANAGER

CHIEF ENG/ARCH

DEPARTMENT OF THE NAVY
NAVAL FACILITIES ENGINEERING COMMAND
NAVAL FACILITIES ENGINEERING COMMAND ~ MID-ATLANTIC
NAVAL AIR STATION OCEANA ~ VIRGINIA BEACH, VIRGINIA
HR IPT
NAVAL AIR STATION OCEANA VIRGINIA BEACH, VIRGINIA
ENERGY AND RELIABILITY
MODERNIZATION OF AIRFIELD LIGHTING - PHASE 1 AND 2
VAULT E-3036 – DEMOLITION

SCALE: 1/4" = 1'-0"

EPROJECT NO.: 1291651

CONSTR. CONTR. NO.

NAVFAC DRAWING NO.
12691631

SHEET 98 OF 368

AD401

DRAWFORM REVISION: 10 MARCH 2009

FILE NAME: H:\56427 NAS Oceana\Architectural\Planset\Task 008\10-0863-008-AD-401.dwg LAYOUT NAME: ED-3036 PLOTTED: Tuesday, March 24, 2015 - 10:09am USER: kjernigan

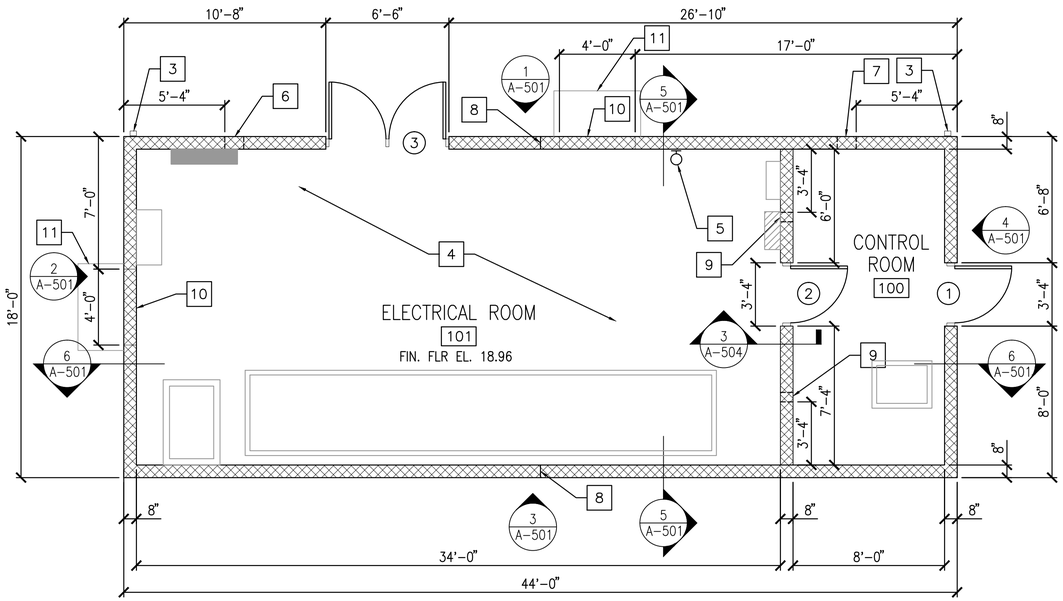

VAULT E-3036 FLOOR PLAN

SCALE: 1/4" = 1'-0"

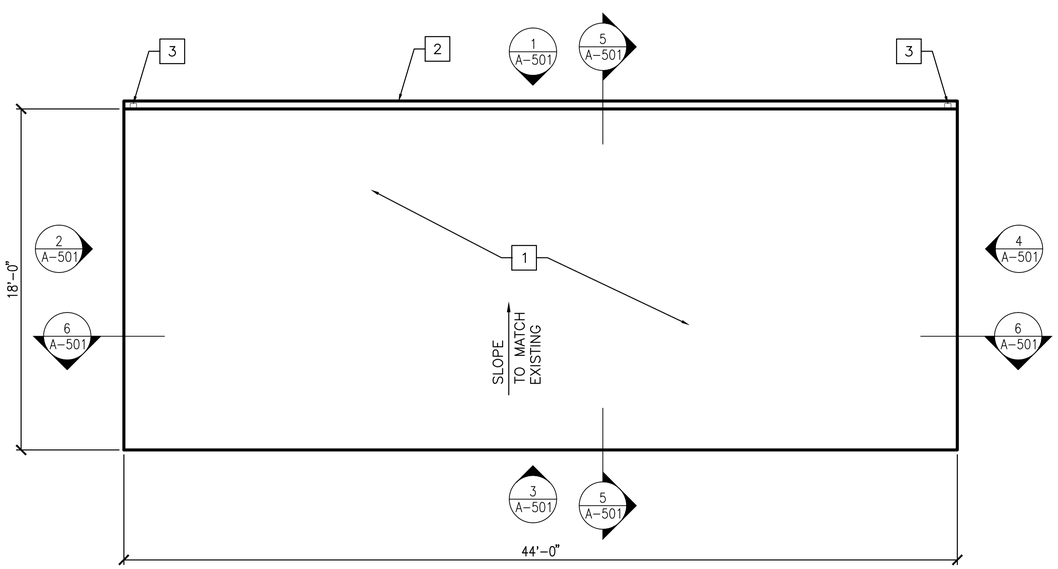

VAULT E-3036 ROOF PLAN

SCALE: 1/4" = 1'-0"

GENERAL SHEET NOTES

1. REFER TO DRAWING A-001 FOR ARCHITECTURAL LEGEND, ABBREVIATIONS AND NOTES.
2. REFER TO CIVIL, STRUCTURAL, ELECTRICAL, AND MECHANICAL DRAWINGS FOR ADDITIONAL WORK.
3. ALL WORK SHOWN ON THIS DRAWING TO BE COMPLETED UNDER PHASE 2.

CONSTRUCTION KEYNOTES

1. MEMBRANE ROOFING SYSTEM OVER RIGID INSULATION.
2. PREFINISHED METAL GUTTER.
3. PREFINISHED METAL DOWNSPOUT.
4. CONCRETE SLAB ON GRADE.
5. BRACKET MOUNTED FIRE EXTINGUISHER.
6. INTAKE LOUVER. SEE ELEVATION DRAWING A-501 AND MECHANICAL DRAWINGS.
7. EXHAUST LOUVER. SEE ELEVATION DRAWING A-501 AND MECHANICAL DRAWINGS.
8. CONTROL JOINT.
9. 6x6 GRILLE W/ BOTTOM AT 8'-10" AFF. SEE MECHANICAL DRAWINGS FOR DETAILS.
10. SMOOTH FACE CMU AT HEAT PUMP. SEE ELEVATIONS DRAWING A-501 AND MECHANICAL DRAWINGS FOR DETAILS.
11. CONCRETE EQUIPMENT PAD. SEE ELEVATIONS DRAWING A-501 AND STRUCTURAL DRAWINGS FOR DETAILS.

KEY MAP C

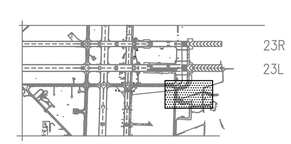

GRAPHIC SCALE

1/4"=1'-0"

1' 0 2' 4' 8'

SYM	DESCRIPTION	DATE	APPR

NAVFAC

James Schneider

COMMONWEALTH OF VIRGINIA
JAMES ROBERT SCHNEIDER
Lic. No. 0401 011031
ARCHITECT

A/E INFO.

APPROVED

FOR COMMANDER NAVFAC

ACTIVITY

SATISFACTORY TO DATE

DES DRE DRW DRE CHK JRS

PM/DM

BRANCH MANAGER

CHIEF ENG/ARCH

DEPARTMENT OF THE NAVY
NAVAL FACILITIES ENGINEERING COMMAND
NAVAL FACILITIES ENGINEERING COMMAND ~ MID-ATLANTIC
NAVAL AIR STATION OCEANA ~ VIRGINIA BEACH, VIRGINIA
HR IPT

NAVAL AIR STATION OCEANA
VIRGINIA BEACH, VIRGINIA
ENERGY AND RELIABILITY
MODERNIZATION OF AIRFIELD LIGHTING - PHASE 1 AND 2

VAULT E-3036 - FLOOR & ROOF PLANS

SCALE: 1/4" = 1'-0"

EPROJECT NO.: 1291651

CONSTR. CONTR. NO.

NAVFAC DRAWING NO.
12691632

SHEET 99 OF 368

A-401

DRAWFORM REVISION: 10 MARCH 2009

FILE NAME: H:\56427 NAS Oceana\Architectural\Pionset\Task 008\10-0863-008-A-401.dwg LAYOUT NAME: A-401 PLOTTED: Tuesday, March 24, 2015 - 10:00am USER: kjernigan

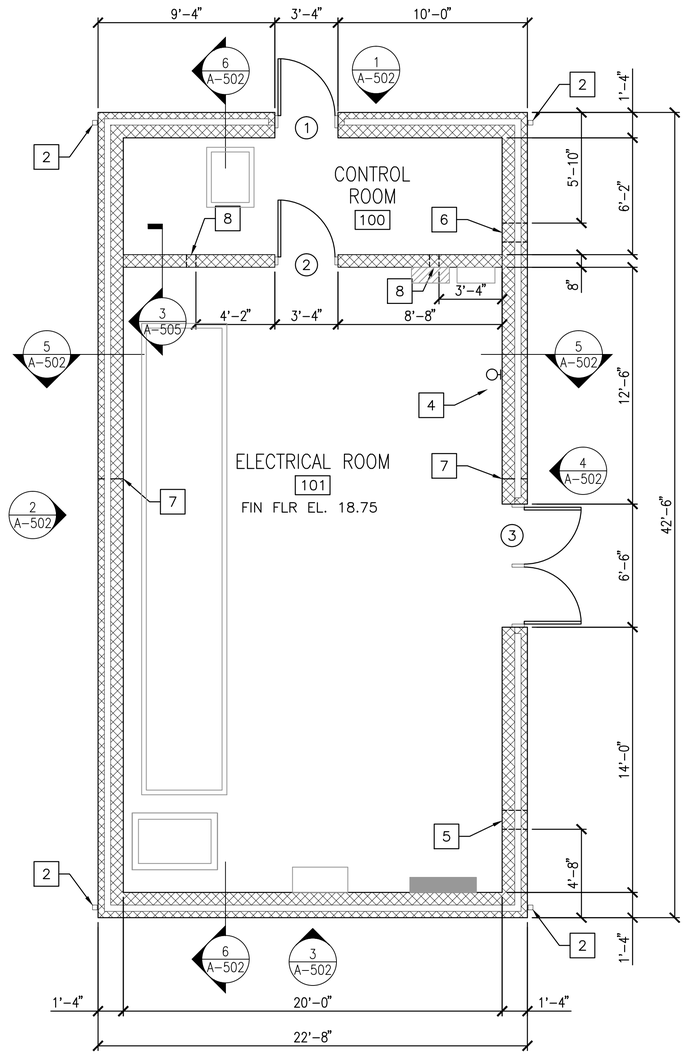

VAULT E-101 FLOOR PLAN

SCALE: 1/4" = 1'-0"

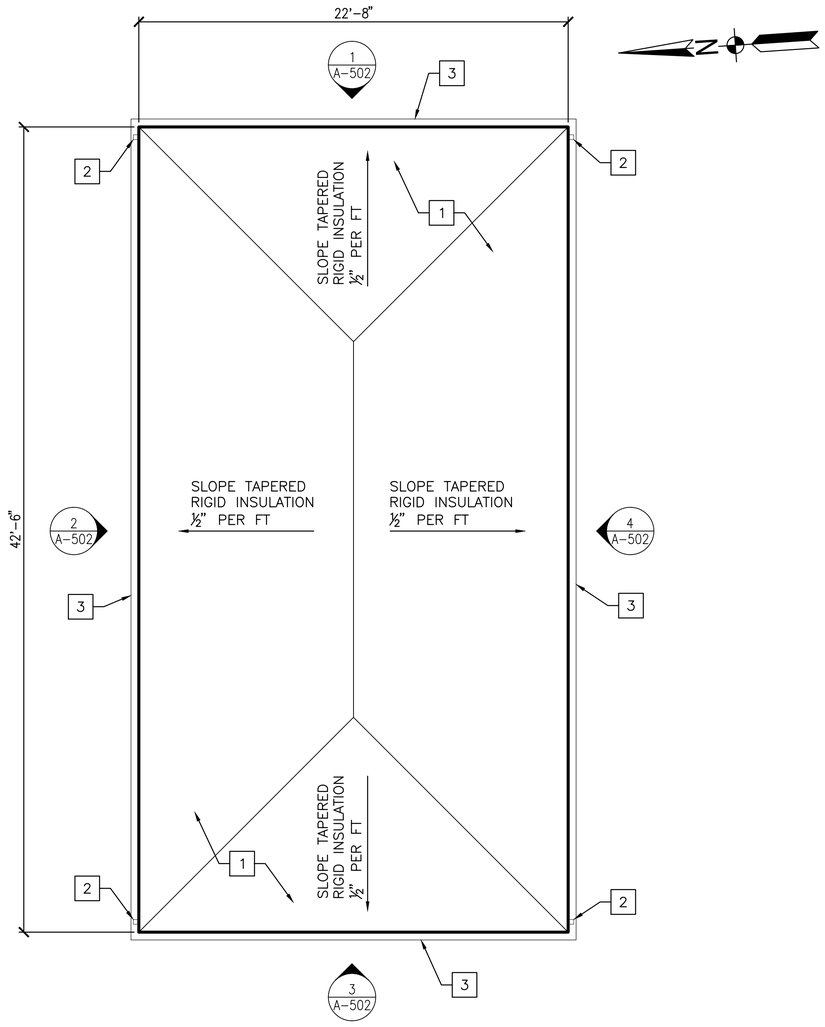

VAULT E-101 ROOF PLAN

SCALE: 1/4" = 1'-0"

CONSTRUCTION KEYNOTES

1. MEMBRANE ROOFING SYSTEM OVER TAPERED INSULATION.
2. PREFINISHED METAL DOWNSPOUT.
3. PREFINISHED METAL GUTTER.
4. BRACKET MOUNTED FIRE EXTINGUISHER.
5. INTAKE LOUVER. SEE ELEVATION DRAWING A-502 AND MECHANICAL DRAWINGS.
6. EXHAUST LOUVER. SEE ELEVATION DRAWING A-502 AND MECHANICAL DRAWINGS.
7. CONTROL JOINT.
8. 6x6 GRILLE W/ BOTTOM AT 8'-10" AFF. SEE MECHANICAL DRAWINGS FOR DETAILS.

GENERAL SHEET NOTES

1. ALL WORK SHOWN ON THIS DRAWING TO BE COMPLETED UNDER PHASE 1.

KEY MAP C

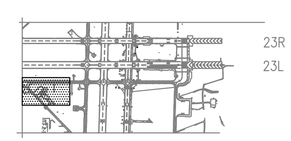

GRAPHIC SCALE

1/4"=1'-0"

1' 0 2' 4' 8'

SYM	DESCRIPTION	DATE	APPR

NAVFAC

James Schneider
COMMONWEALTH OF VIRGINIA
JAMES ROBERT SCHNEIDER
Lic. No. 0401 011031
ARCHITECT

A/E INFO

APPROVED

FOR COMMANDER NAVFAC

ACTIVITY

SATISFACTORY TO DATE

DES DRE DRW DRE CHK JRS

PM/DM

BRANCH MANAGER

CHIEF ENG/ARCH

DEPARTMENT OF THE NAVY
NAVAL FACILITIES ENGINEERING COMMAND ~ MID-ATLANTIC
HR IPT
NAVAL FACILITIES ENGINEERING COMMAND
NAVAL AIR STATION OCEANA ~ VIRGINIA BEACH, VIRGINIA
NAVAL AIR STATION OCEANA
VIRGINIA BEACH, VIRGINIA
ENERGY AND RELIABILITY
MODERNIZATION OF AIRFIELD LIGHTING - PHASE 1 AND 2
VAULT E-101 – FLOOR & ROOF PLANS

SCALE: 1/4" = 1'-0"

EFPROJECT NO.: 1291651

CONSTR. CONTR. NO.

NAVFAC DRAWING NO. 12691633

SHEET 100 OF 368

A-402

DRAWFORM REVISION: 10 MARCH 2009

FILE NAME: H:\56427 NAS Oceana\Architecture\Planset\Task 008\10-0863-008-A-402.dwg LAYOUT NAME: A-402 PLOTTED: Tuesday, March 24, 2015 - 10:00am USER: kjernigan

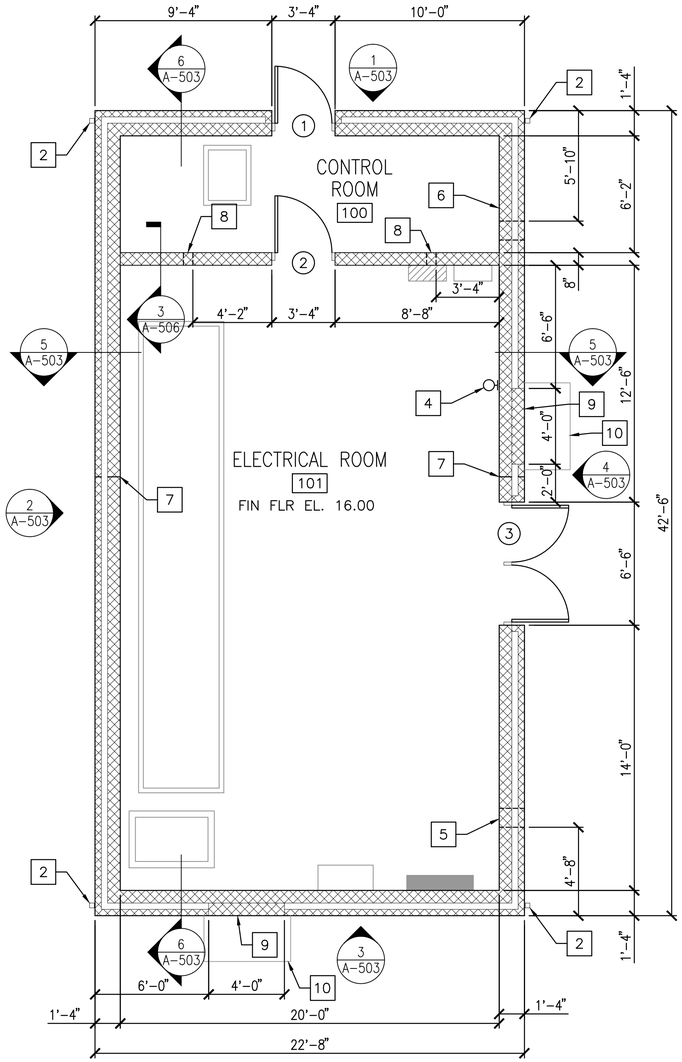

VAULT E-1120 FLOOR PLAN

SCALE: 1/4" = 1'-0"

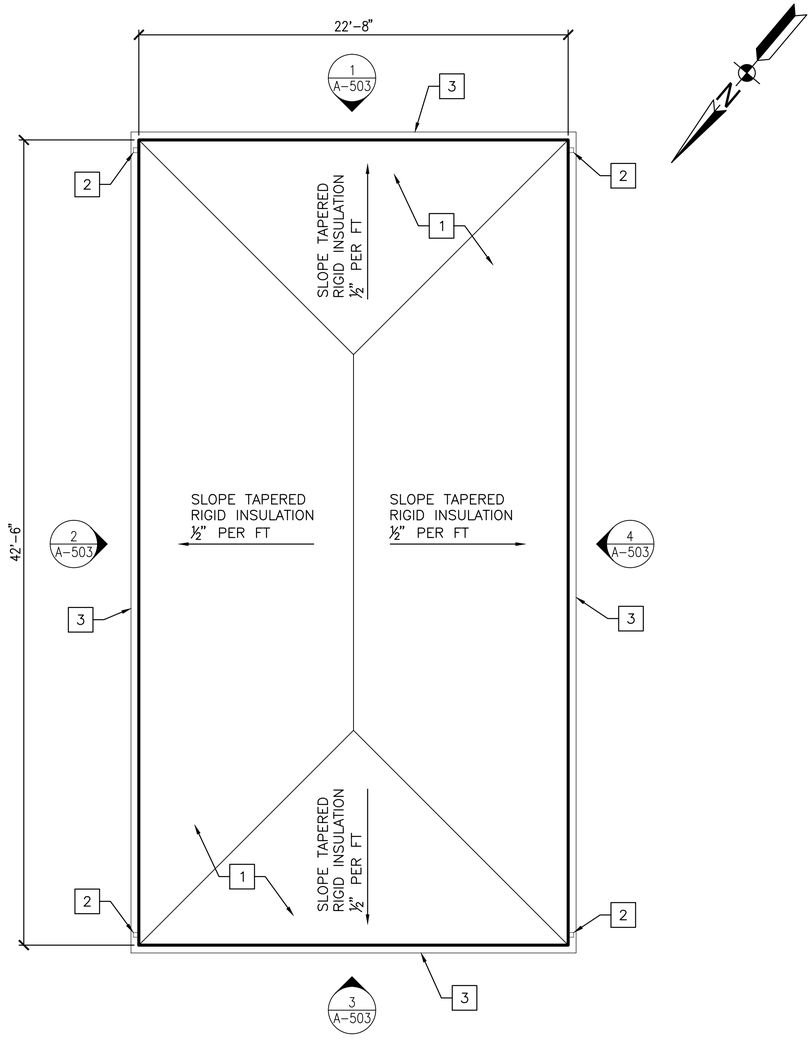

VAULT E-1120 ROOF PLAN

SCALE: 1/4" = 1'-0"

CONSTRUCTION KEYNOTES

1. MEMBRANE ROOFING SYSTEM OVER TAPERED INSULATION.
2. PREFINISHED METAL DOWNSPOUT.
3. PREFINISHED METAL GUTTER.
4. BRACKET MOUNTED FIRE EXTINGUISHER.
5. INTAKE LOUVER. SEE ELEVATION DRAWING A-503 AND MECHANICAL DRAWINGS.
6. EXHAUST LOUVER. SEE ELEVATION DRAWING A-503 AND MECHANICAL DRAWINGS.
7. CONTROL JOINT.
8. 6x6 GRILLE W/ BOTTOM AT 8'-10" AFF. SEE MECHANICAL DRAWINGS FOR DETAILS.
9. SMOOTH FACE CMU AT HEAT PUMP. SEE ELEVATIONS DRAWING A-503 AND MECHANICAL DRAWINGS FOR DETAILS.
10. CONCRETE EQUIPMENT PAD. SEE ELEVATIONS DRAWING A-503 AND STRUCTURAL DRAWINGS FOR DETAILS.

GENERAL SHEET NOTES

1. ALL WORK SHOWN ON THIS DRAWING TO BE COMPLETED UNDER PHASE 2.

KEY MAP B

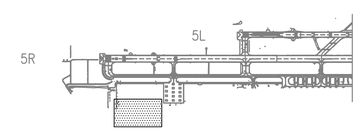

GRAPHIC SCALE

1/4"=1'-0"

1' 0 2' 4' 8'

STM	DESCRIPTION	DATE	APPR

NAVFAC

James Schneider

COMMONWEALTH OF VIRGINIA
JAMES ROBERT SCHNEIDER
Lic. No. 0401 011031
ARCHITECT

A/E INFO

APPROVED

FOR COMMANDER NAVFAC

ACTIVITY

SATISFACTORY TO DATE

DES DRE DRW DRE CHK JRS

PM/DM

BRANCH MANAGER

CHIEF ENG/ARCH

DEPARTMENT OF THE NAVY
NAVAL FACILITIES ENGINEERING COMMAND
HR IPT
NAVAL FACILITIES ENGINEERING COMMAND ~ MID-ATLANTIC
NAVAL AIR STATION OCEANA ~ VIRGINIA BEACH, VIRGINIA
NAVAL AIR STATION OCEANA
VIRGINIA BEACH, VIRGINIA
ENERGY AND RELIABILITY
MODERNIZATION OF AIRFIELD LIGHTING - PHASE 1 AND 2
VAULT E-1120 – FLOOR & ROOF PLANS

SCALE: 1/4" = 1'-0"

EFPROJECT NO.: 1291651

CONSTR. CONTR. NO.

NAVFAC DRAWING NO. 12691634

SHEET 101 OF 368

A-403

DRAWFORM REVISION: 10 MARCH 2009

FILE NAME: H:\56427 NAS Oceana\Architectural\Planset\Task 008\10-0863-008-A-403.dwg LAYOUT NAME: A-403 PLOTTED: Tuesday, March 24, 2015 - 10:01am USER: kjernigan

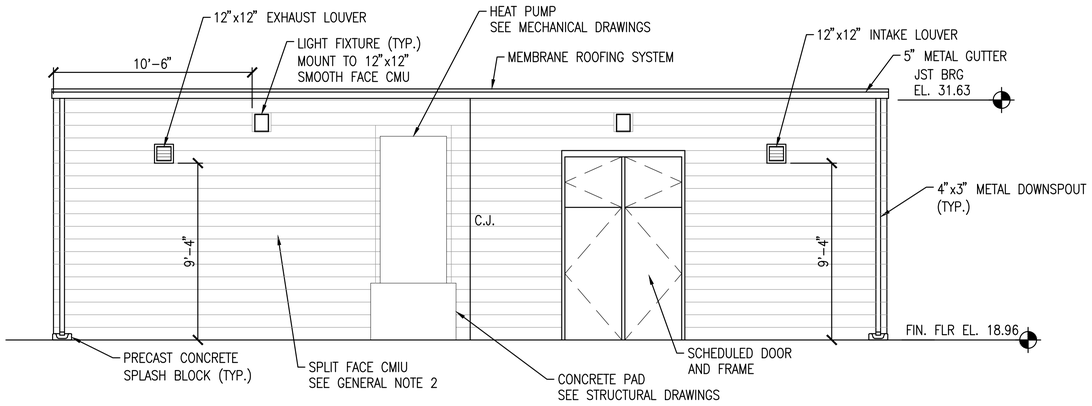

VAULT E-3036 ELEVATION (1)

SCALE: 1/4" = 1'-0" A-401

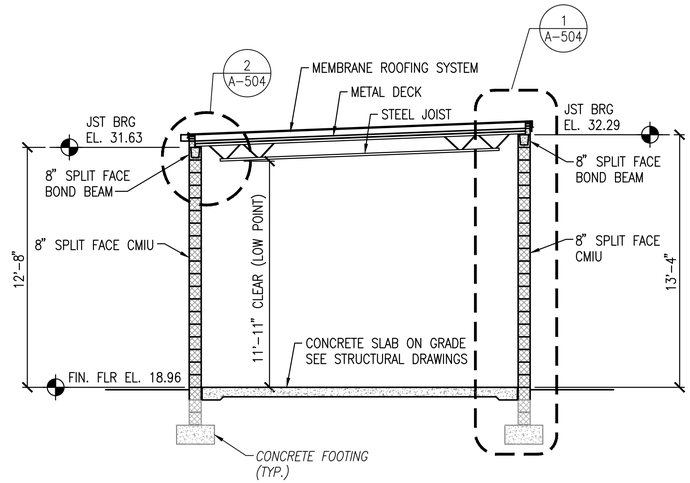

VAULT E-3036 BUILDING SECTION (5)

SCALE: 1/4" = 1'-0" A-401

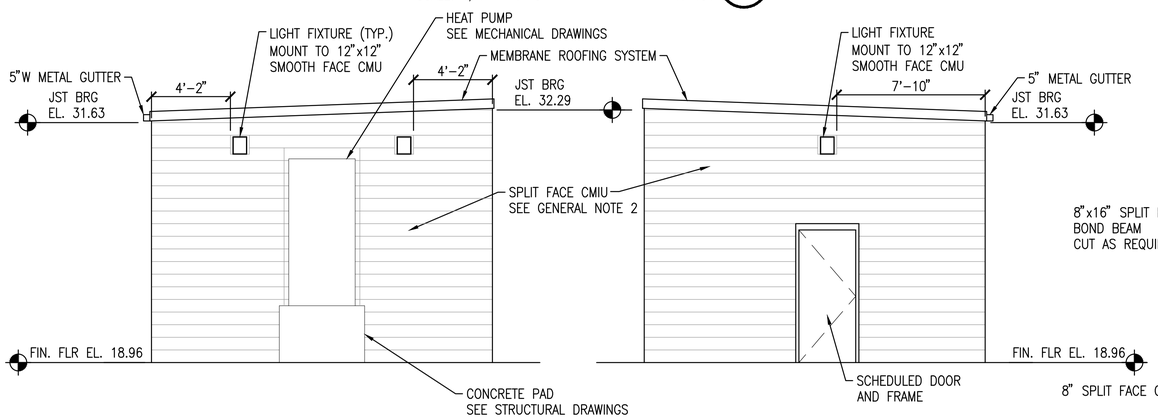

VAULT E-3036 ELEVATION (2)

SCALE: 1/4" = 1'-0" A-401

VAULT E-3036 ELEVATION (4)

SCALE: 1/4" = 1'-0" A-401

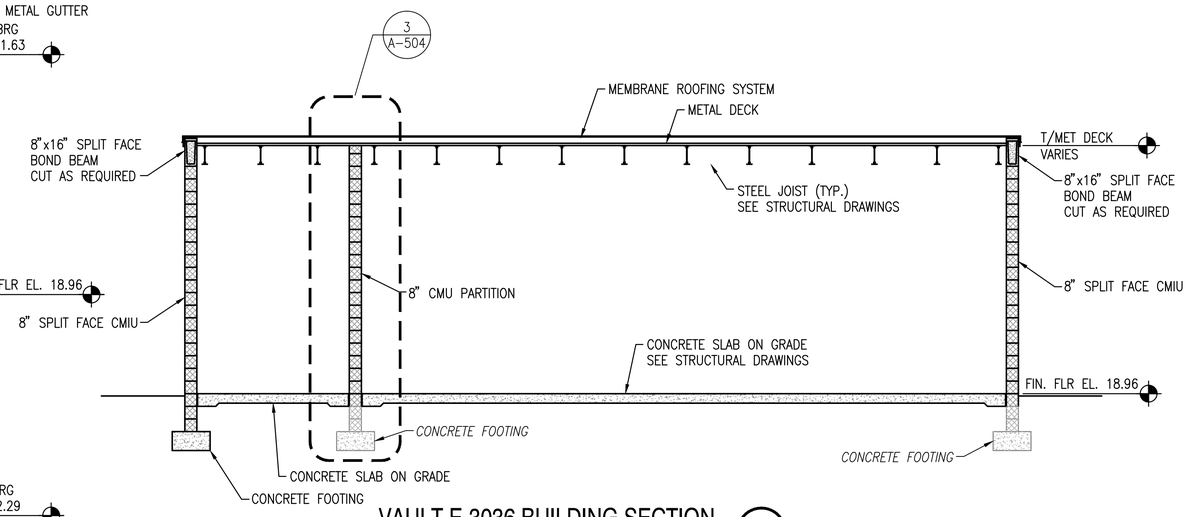

VAULT E-3036 BUILDING SECTION (6)

SCALE: 1/4" = 1'-0" A-401

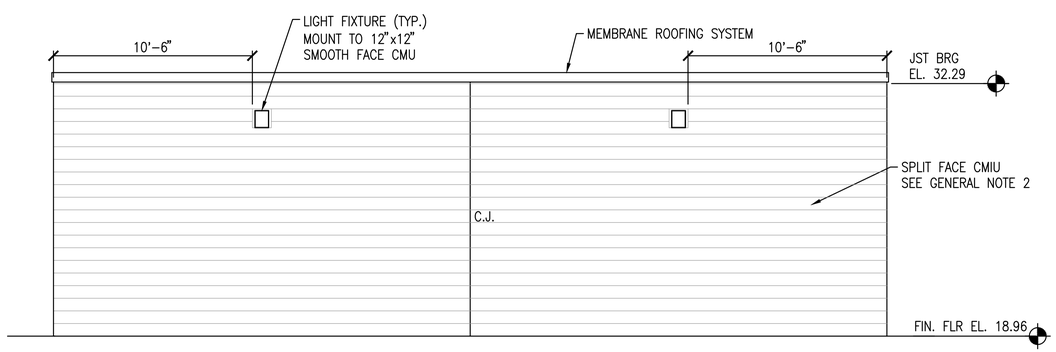

VAULT E-3036 ELEVATION (3)

SCALE: 1/4" = 1'-0" A-401

GENERAL SHEET NOTES

1. ALL WORK SHOWN ON THIS DRAWING TO BE COMPLETED UNDER PHASE 2.
2. 8"x8"x16" CMIU SCORED HORIZONTALLY TO SIMULATE 2-4" COURSES.

GRAPHIC SCALE

1/4"=1'-0"

1' 0 2' 4' 8'

SYM	DESCRIPTION	DATE	APPR

NAVFAC

James Schneider
COMMONWEALTH OF VIRGINIA
JAMES ROBERT SCHNEIDER
Lic. No. 0401 011031
ARCHITECT

A/E INFO.

APPROVED

FOR COMMANDER NAVFAC

ACTIVITY

SATISFACTORY TO DATE

DES DRE DRW DRE CHK JRS

PM/DM

BRANCH MANAGER

CHIEF ENG/ARCH

DEPARTMENT OF THE NAVY
NAVAL FACILITIES ENGINEERING COMMAND
NAVAL FACILITIES ENGINEERING COMMAND ~ MID-ATLANTIC
NAVAL AIR STATION OCEANA ~ VIRGINIA BEACH, VIRGINIA
HR IPT
NAVAL AIR STATION OCEANA
VIRGINIA BEACH, VIRGINIA
ENERGY AND RELIABILITY
MODERNIZATION OF AIRFIELD LIGHTING - PHASE 1 AND 2
VAULT E-3036 - ELEVATIONS & BUILDING SECTIONS

SCALE: 1/4" = 1'-0"

EPROJECT NO.: 1291651

CONSTR. CONTR. NO.

NAVFAC DRAWING NO.
12691635

SHEET 102 OF 368

A-501

DRAWFORM REVISION: 10 MARCH 2009

FILE NAME: H:\56427 NAS Oceana\Architectural\Phase1\Task 008\10-0863-008-A-501.dwg LAYOUT NAME: A-501 PLOTTED: Tuesday, March 24, 2015 - 10:02am USER: kjernigan

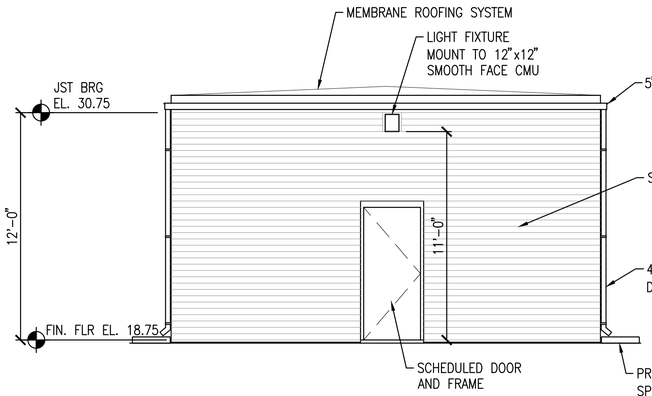

VAULT E-101 ELEVATION (1)

SCALE: 1/4" = 1'-0" A-402

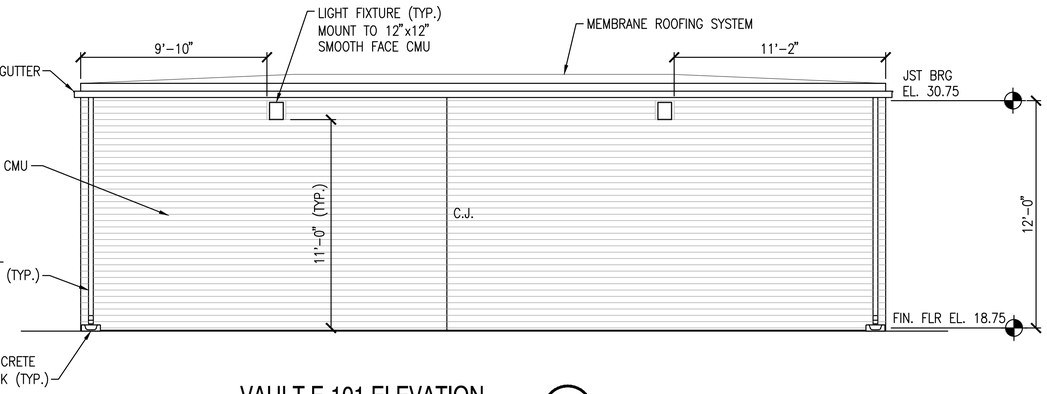

VAULT E-101 ELEVATION (2)

SCALE: 1/4" = 1'-0" A-402

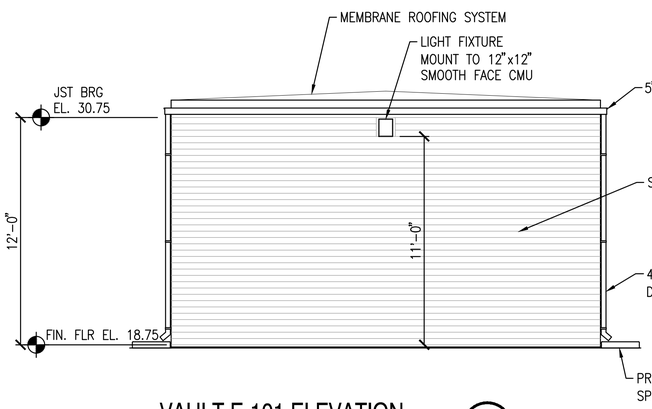

VAULT E-101 ELEVATION (3)

SCALE: 1/4" = 1'-0" A-402

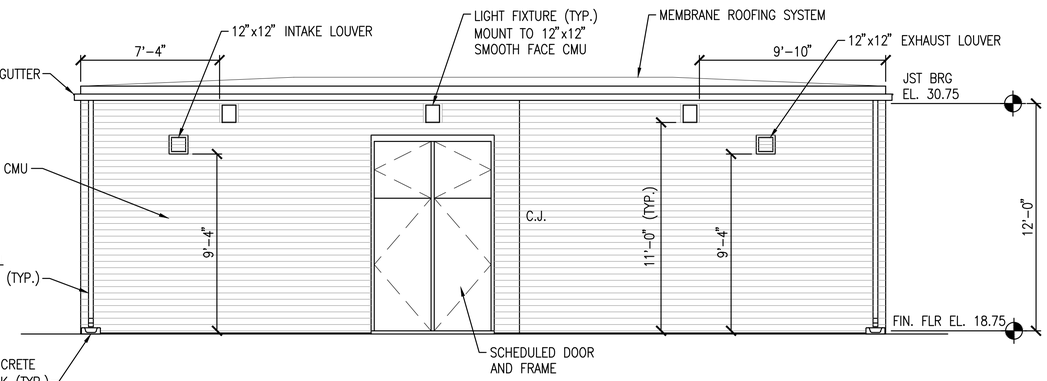

VAULT E-101 ELEVATION (4)

SCALE: 1/4" = 1'-0" A-402

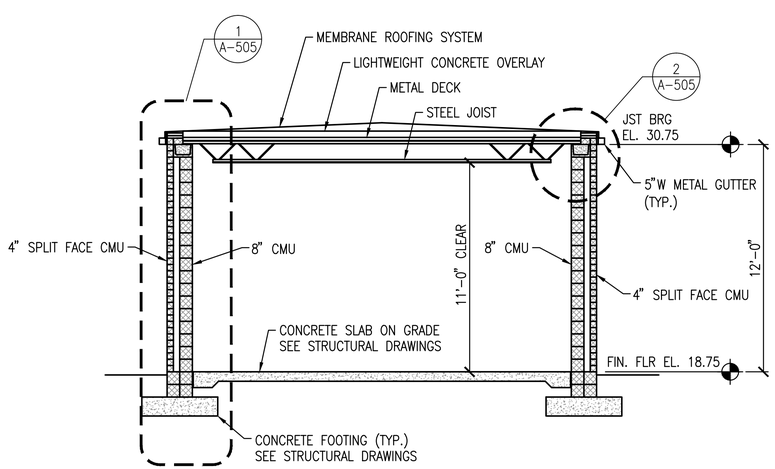

VAULT E-101 BUILDING SECTION (5)

SCALE: 1/4" = 1'-0" A-402

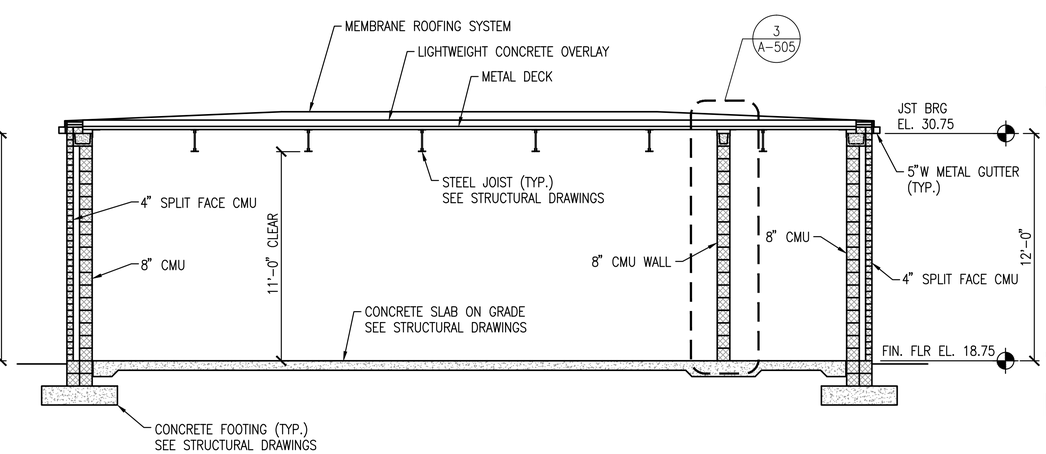

VAULT E-101 BUILDING SECTION (6)

SCALE: 1/4" = 1'-0" A-402

GENERAL SHEET NOTES

1. ALL WORK SHOWN ON THIS DRAWING TO BE COMPLETED UNDER PHASE 1.

GRAPHIC SCALE

1/4"=1'-0"

1' 0 2' 4' 8'

SYM	DESCRIPTION	DATE	APPR

NAVFAC

James Schneider

COMMONWEALTH OF VIRGINIA
JAMES ROBERT SCHNEIDER
Lic. No. 0401 011031
ARCHITECT

A/E INFO

APPROVED

FOR COMMANDER NAVFAC

ACTIVITY

SATISFACTORY TO DATE

DES DRE DRW DRE CHK JRS

PM/DM

BRANCH MANAGER

CHIEF ENG/ARCH

DEPARTMENT OF THE NAVY
NAVAL FACILITIES ENGINEERING COMMAND ~ MID-ATLANTIC
NAVAL FACILITIES ENGINEERING COMMAND
NAVAL AIR STATION OCEANA – VIRGINIA BEACH, VIRGINIA
HR IPT
NAVAL AIR STATION OCEANA
VIRGINIA BEACH, VIRGINIA
ENERGY AND RELIABILITY
MODERNIZATION OF AIRFIELD LIGHTING - PHASE 1 AND 2
VAULT E-101 – ELEVATIONS & BUILDING SECTIONS

SCALE: 1/4" = 1'-0"

EPROJECT NO.: 1291651

CONSTR. CONTR. NO.

NAVFAC DRAWING NO.
12691636

SHEET 103 OF 368

A-502

DRAWFORM REVISION: 10 MARCH 2009

FILE NAME: H:\56427 NAS Oceana\Architecture\Planset\Task 008\10-0863-008-A-502.dwg LAYOUT NAME: A-502 PLOTTED: Tuesday, March 24, 2015 - 10:03am USER: kjernigan

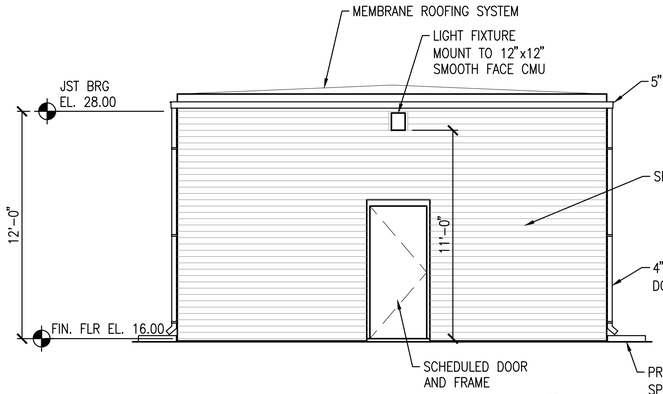

VAULT E-1120 ELEVATION (1)

SCALE: 1/4" = 1'-0" A-403

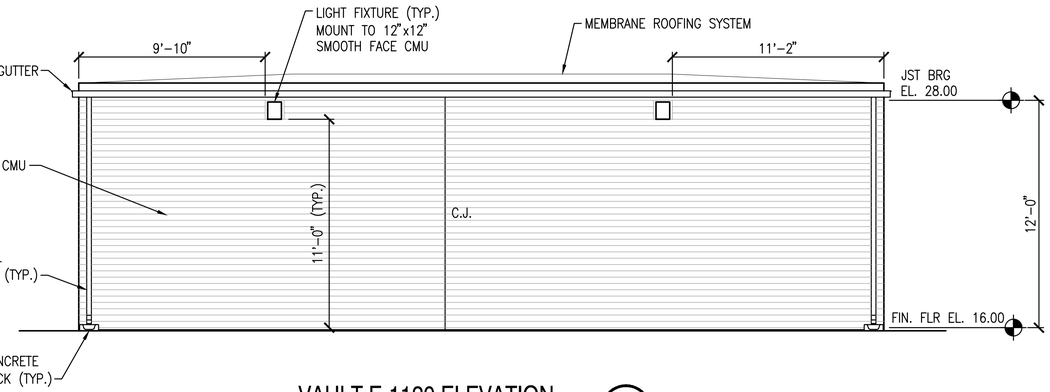

VAULT E-1120 ELEVATION (2)

SCALE: 1/4" = 1'-0" A-403

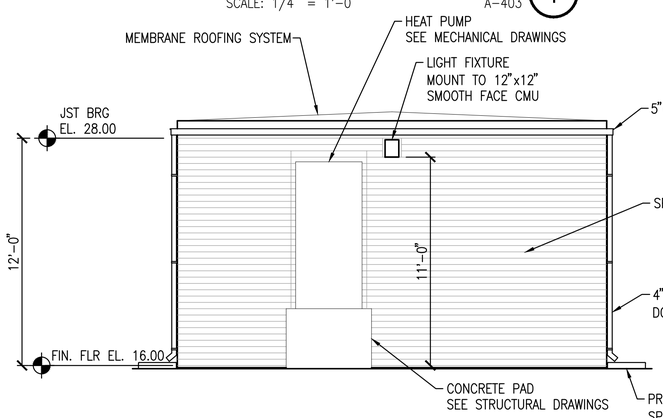

VAULT E-1120 ELEVATION (3)

SCALE: 1/4" = 1'-0" A-403

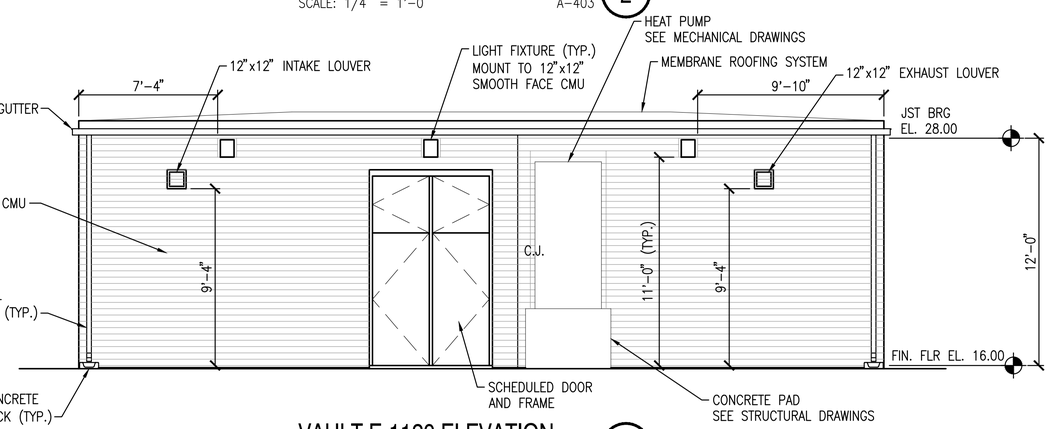

VAULT E-1120 ELEVATION (4)

SCALE: 1/4" = 1'-0" A-403

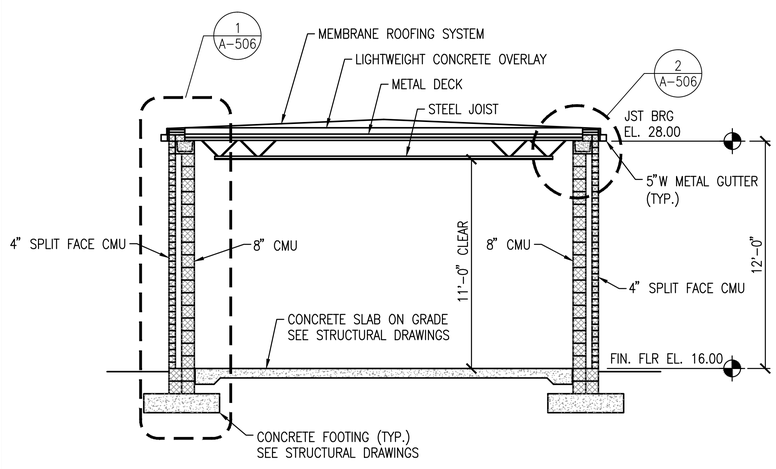

VAULT E-1120 BUILDING SECTION (5)

SCALE: 1/4" = 1'-0" A-403

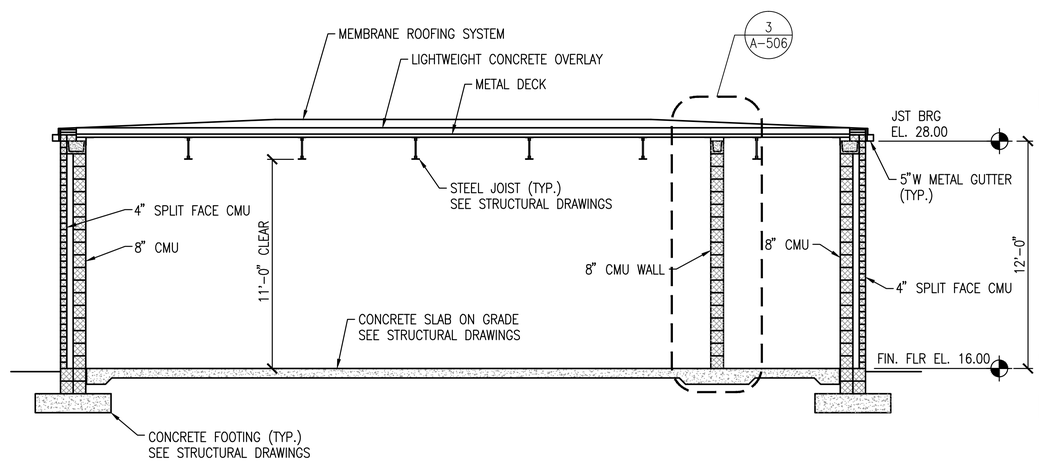

VAULT E-1120 BUILDING SECTION (6)

SCALE: 1/4" = 1'-0" A-403

GENERAL SHEET NOTES

1. ALL WORK SHOWN ON THIS DRAWING TO BE COMPLETED UNDER PHASE 2.

GRAPHIC SCALE

1/4"=1'-0"

1' 0 2' 4' 8'

SYM	DESCRIPTION	DATE	APPR

NAVFAC

James Schneider

COMMONWEALTH OF VIRGINIA
JAMES ROBERT SCHNEIDER
Lic. No. 0401 011031
ARCHITECT

A/E INFO

APPROVED

FOR COMMANDER NAVFAC

ACTIVITY

SATISFACTORY TO DATE

DES DRE DRW DRE CHK JRS

PM/DM

BRANCH MANAGER

CHIEF ENG/ARCH

DEPARTMENT OF THE NAVY
NAVAL FACILITIES ENGINEERING COMMAND
HR IPT

NAVAL FACILITIES ENGINEERING COMMAND – MID-ATLANTIC
NAVAL AIR STATION OCEANA – VIRGINIA BEACH, VIRGINIA

NAVAL AIR STATION OCEANA
VIRGINIA BEACH, VIRGINIA

ENERGY AND RELIABILITY
MODERNIZATION OF AIRFIELD LIGHTING - PHASE 1 AND 2

VAULT E-1120 – ELEVATIONS & BUILDING SECTIONS

SCALE: 1/4" = 1'-0"

EPROJECT NO.: 1291651

CONSTR. CONTR. NO.

NAVFAC DRAWING NO.
12691637

SHEET 104 OF 368

A-503

DRAWFORM REVISION: 10 MARCH 2009

FILE NAME: H:\56427 NAS Oceana\Architectural\Planset\Task 008\10-0863-008-A-503.dwg LAYOUT NAME: A-503 PLOTTED: Tuesday, March 24, 2015 - 10:03am USER: kjernigan

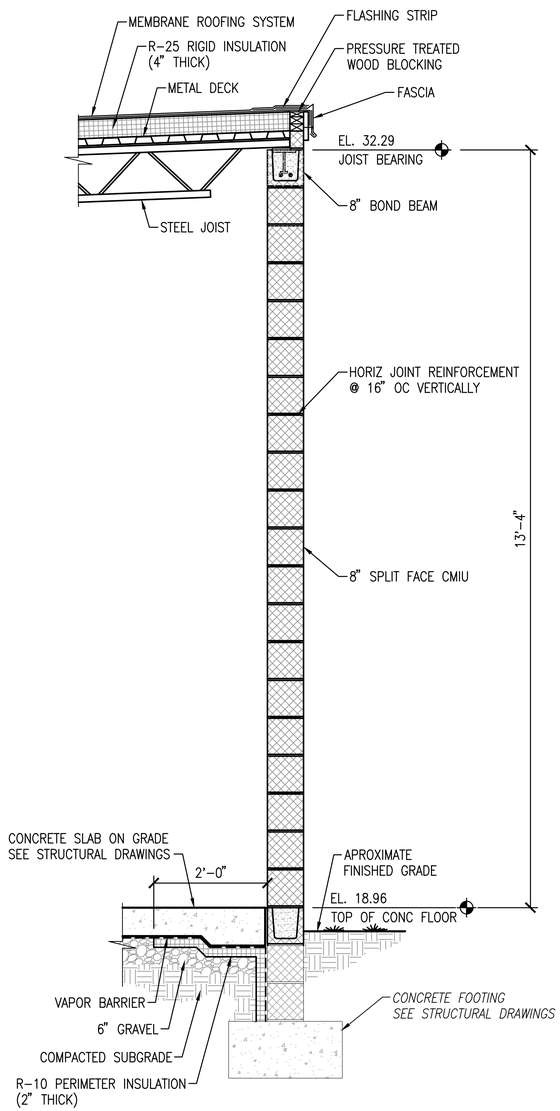

VAULT E-3036 WALL SECTION (1)

SCALE: 3/4"=1'-0" A-501

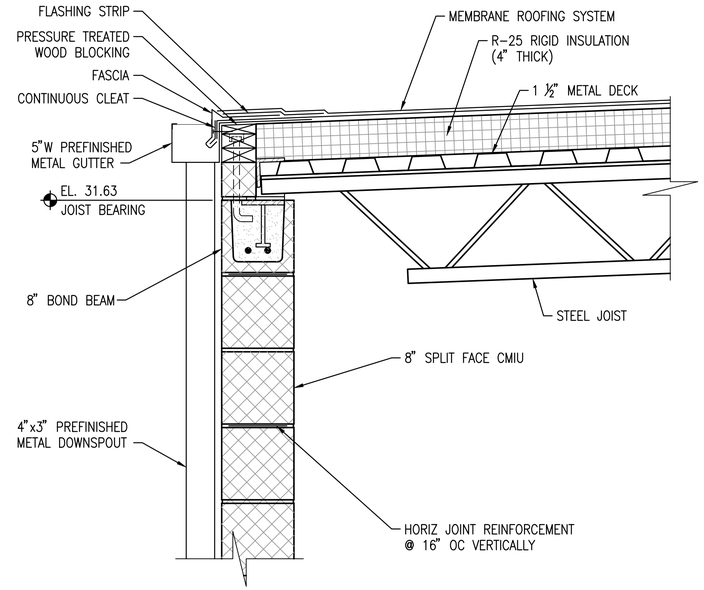

VAULT E-3036 ROOF DETAIL (2)

SCALE: 1 1/2"=1'-0" A-501

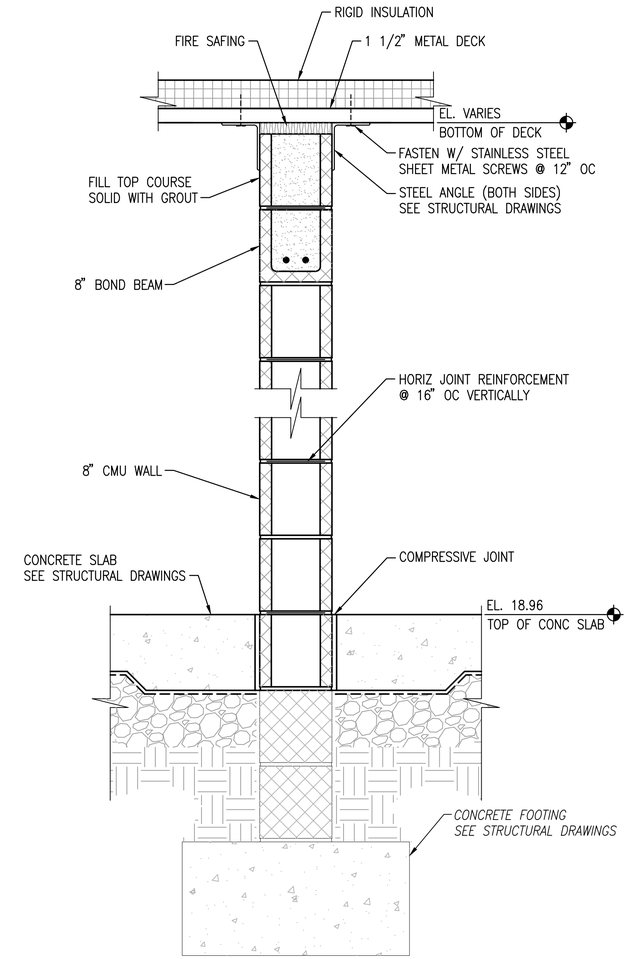

VAULT E-3036 WALL DETAIL (3)

SCALE: 1 1/2"=1'-0" A-401

GENERAL SHEET NOTES

1. ALL WORK SHOWN ON THIS DRAWING TO BE COMPLETED UNDER PHASE 2.
2. REFER TO DRAWING A-001 FOR ARCHITECTURAL LEGEND, ABBREVIATIONS AND NOTES.
3. REFER TO CIVIL, STRUCTURAL, ELECTRICAL, AND MECHANICAL DRAWINGS FOR ADDITIONAL WORK.
4. SEE STRUCTURAL DRAWINGS FOR MASONRY VERTICAL REINFORCEMENT.

GRAPHIC SCALE

3/4"=1'-0" 1' 6" 0 1' 2' 3'

1 1/2"=1'-0" 3 2 1 0 3" 6" 12" 24"

SYM	DESCRIPTION	DATE	APPR

NAVFAC

James Schneider
COMMONWEALTH OF VIRGINIA
JAMES ROBERT SCHNEIDER
Lic. No. 0401 011031
ARCHITECT

A/E INFO

APPROVED

FOR COMMANDER NAVFAC

ACTIVITY

SATISFACTORY TO DATE

DES DRE DRW DRE CHK JRS

PM/DM

BRANCH MANAGER

CHIEF ENG/ARCH

DEPARTMENT OF THE NAVY
NAVAL FACILITIES ENGINEERING COMMAND
HR IPT
NAVAL FACILITIES ENGINEERING COMMAND ~ MID-ATLANTIC
NAVAL AIR STATION OCEANA ~ VIRGINIA BEACH, VIRGINIA
NAVAL AIR STATION OCEANA
VIRGINIA BEACH, VIRGINIA
ENERGY AND RELIABILITY
MODERNIZATION OF AIRFIELD LIGHTING - PHASE 1 AND 2
VAULT E-3036 – WALL SECTIONS AND DETAILS

SCALE: AS SHOWN
EPROJECT NO.: 1291651
CONSTR. CONTR. NO.
NAVFAC DRAWING NO. 12691638
SHEET 105 OF 368
A-504

DRAWFORM REVISION: 10 MARCH 2009

FILE NAME: H:\56427 NAS Oceana\Architectural\Phase1\Task 008\10-0863-008-A-504.dwg LAYOUT NAME: A-504 PLOTTED: Tuesday, March 24, 2015 - 10:04am USER: kjernigan

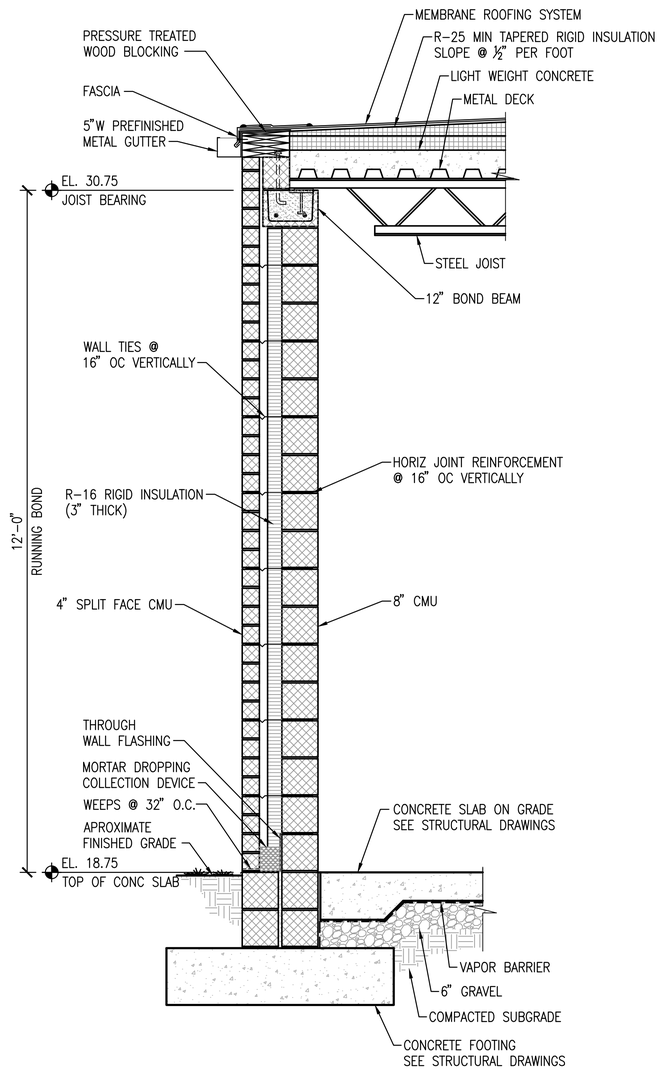

VAULT E-101 WALL SECTION (1)

SCALE: 3/4"=1'-0" A-502

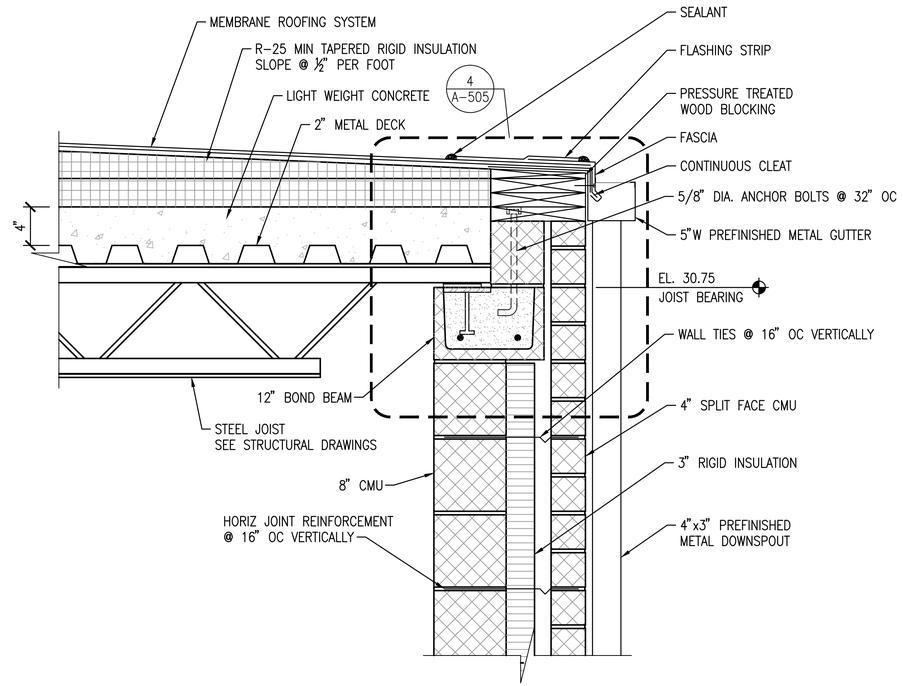

VAULT E-101 ROOF DETAIL (2)

SCALE: 1 1/2"=1'-0" A-502

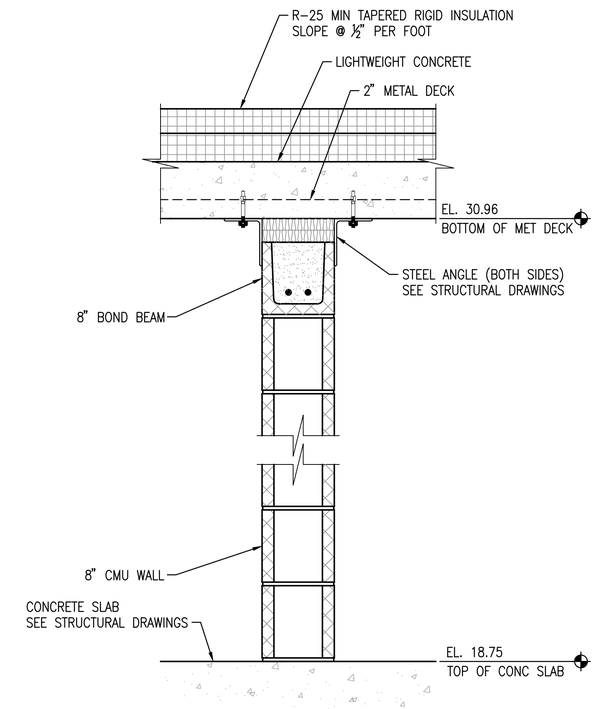

VAULT E-101 WALL DETAIL (3)

SCALE: 1 1/2"=1'-0" A-402

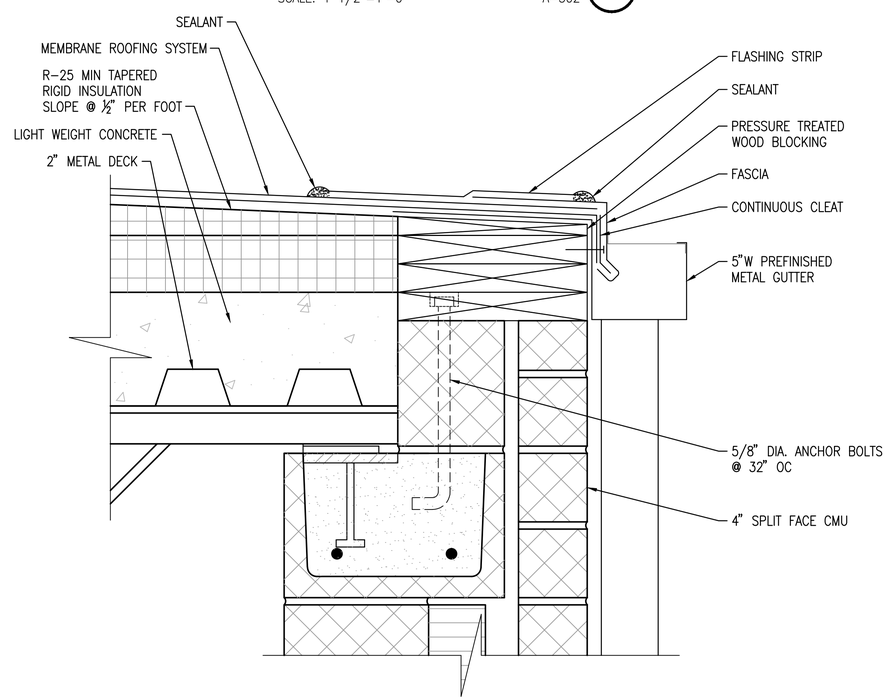

VAULT E-101 ROOF DETAIL (4)

SCALE: 3"=1'-0" A-505

GENERAL SHEET NOTES

1. ALL WORK SHOWN ON THIS DRAWING TO BE COMPLETED UNDER PHASE 1.
2. REFER TO DRAWING A-001 FOR ARCHITECTURAL LEGEND, ABBREVIATIONS AND NOTES.
3. REFER TO CIVIL, STRUCTURAL, ELECTRICAL, AND MECHANICAL DRAWINGS FOR ADDITIONAL WORK.
4. SEE STRUCTURAL DRAWINGS FOR MASONRY VERTICAL REINFORCEMENT.

GRAPHIC SCALE

3/4"=1'-0" 1' 6" 0 1' 2' 3'

1 1/2"=1'-0" 3 2 1 0 3" 6" 12" 24"

3"=1'-0" 3 2 1 0 3" 6" 9" 12"

SYM	DESCRIPTION	DATE	APPR

NAVFAC

James Schneider
COMMONWEALTH OF VIRGINIA
JAMES ROBERT SCHNEIDER
Lic. No. 0401 011031
ARCHITECT

A/E INFO

APPROVED

FOR COMMANDER NAVFAC

ACTIVITY

SATISFACTORY TO DATE

DES DRE DRW DRE CHK JRS

PM/DM

BRANCH MANAGER

CHIEF ENG/ARCH

DEPARTMENT OF THE NAVY
NAVAL FACILITIES ENGINEERING COMMAND
NAVAL FACILITIES ENGINEERING COMMAND ~ MID-ATLANTIC
NAVAL AIR STATION OCEANA ~ VIRGINIA BEACH, VIRGINIA
HR IPT

NAVAL AIR STATION OCEANA
VIRGINIA BEACH, VIRGINIA
ENERGY AND RELIABILITY
MODERNIZATION OF AIRFIELD LIGHTING - PHASE 1 AND 2

VAULT E-101 – WALL SECTIONS AND DETAILS

SCALE: AS SHOWN
EPROJECT NO.: 1291651
CONSTR. CONTR. NO.
NAVFAC DRAWING NO. 12691639
SHEET 106 OF 368

A-505

DRAWFORM REVISION: 10 MARCH 2009

FILE NAME: H:\56427 NAS Oceana\Architectural\Planset\Task 008\10-0863-008-A-505.dwg LAYOUT NAME: A-505 PLOTTED: Tuesday, March 24, 2015 - 10:05am USER: kjernigan

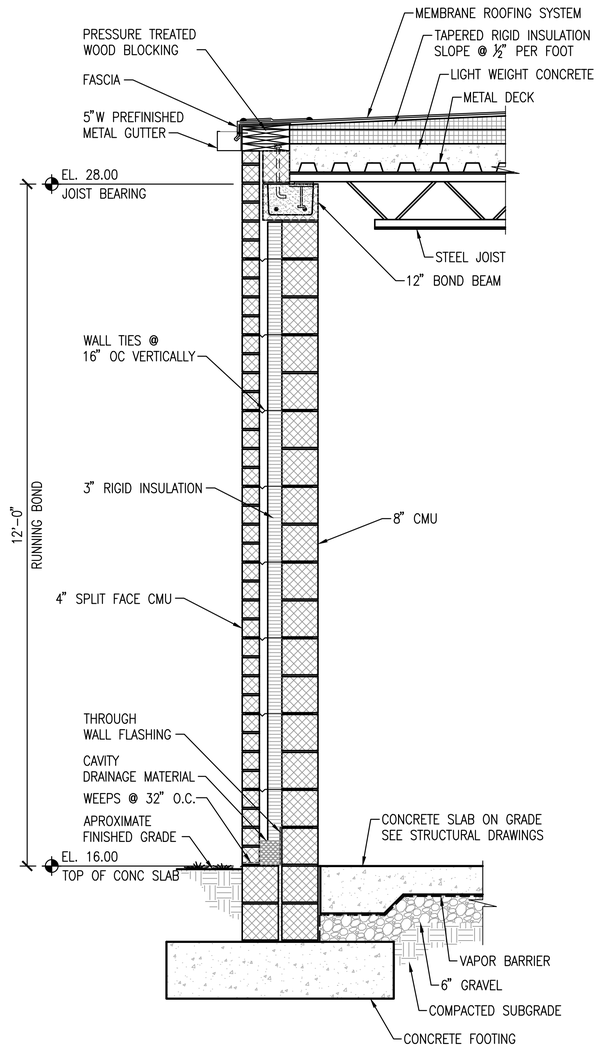

VAULT E-1120 WALL SECTION 1

SCALE: 3/4"=1'-0" A-503

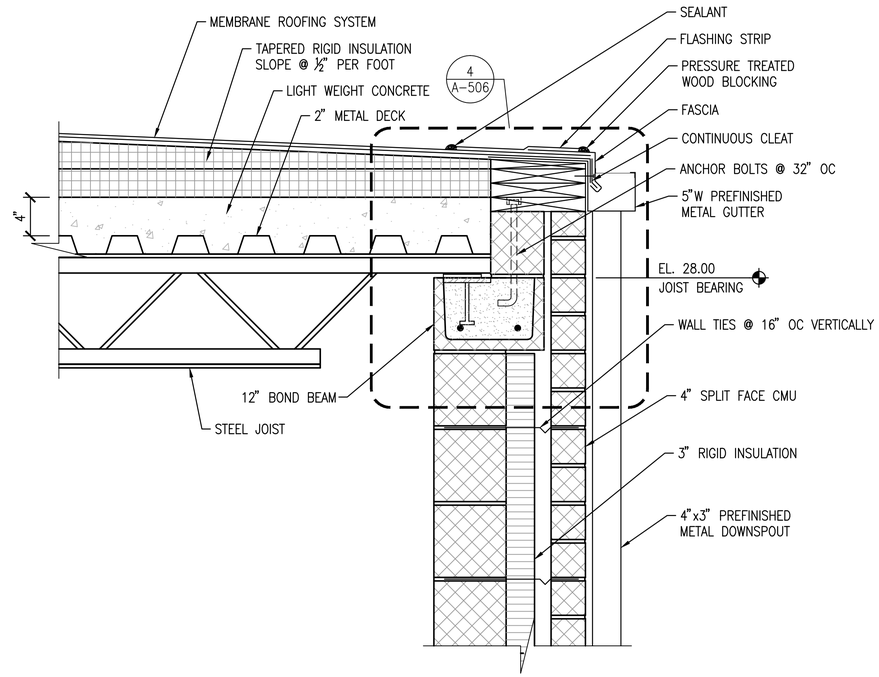

VAULT E-1120 ROOF DETAIL 2

SCALE: 1 1/2"=1'-0" A-503

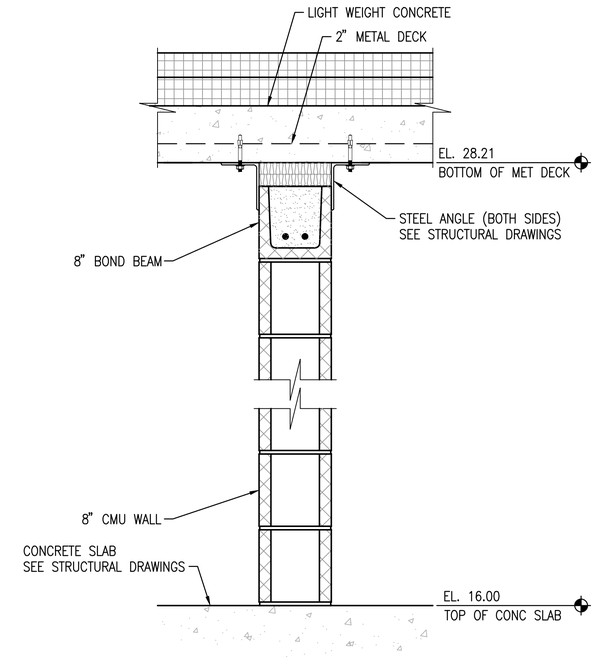

VAULT E-1120 WALL DETAIL 3

SCALE: 1 1/2"=1'-0" A-403

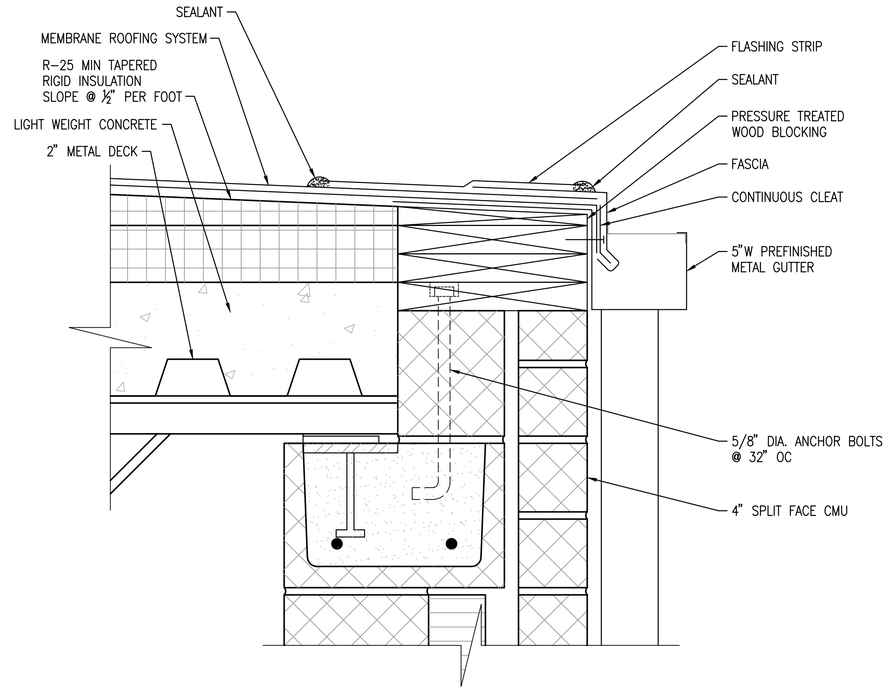

VAULT E-1120 ROOF DETAIL 4

SCALE: 3"=1'-0" A-506

GENERAL SHEET NOTES

1. REFER TO DRAWING A-001 FOR ARCHITECTURAL LEGEND, ABBREVIATIONS AND NOTES.
2. REFER TO CIVIL, STRUCTURAL, ELECTRICAL, AND MECHANICAL DRAWINGS FOR ADDITIONAL WORK.
3. SEE STRUCTURAL DRAWINGS FOR MASONRY VERTICAL REINFORCEMENT.
4. ALL WORK SHOWN ON THIS DRAWING TO BE COMPLETED UNDER PHASE 2.

GRAPHIC SCALE

3/4"=1'-0" 1' 6" 0 1' 2' 3'

1 1/2"=1'-0" 3 2 1 0 3" 6" 12" 24"

3"=1'-0" 3 2 1 0 3" 6" 9" 12"

SYM	DESCRIPTION	DATE	APPR

NAVFAC

James Schneider
COMMONWEALTH OF VIRGINIA
JAMES ROBERT SCHNEIDER
Lic. No. 0401 011031
ARCHITECT

A/E INFO

APPROVED

FOR COMMANDER NAVFAC

ACTIVITY

SATISFACTORY TO DATE

DES DRE DRW DRE CHK JRS

PM/DM

BRANCH MANAGER

CHIEF ENG/ARCH

DEPARTMENT OF THE NAVY
NAVAL FACILITIES ENGINEERING COMMAND ~ MID-ATLANTIC
HR IPT
NAVAL AIR STATION OCEANA
NAVAL FACILITIES ENGINEERING COMMAND
NAVAL AIR STATION OCEANA – VIRGINIA BEACH, VIRGINIA
VIRGINIA BEACH, VIRGINIA
ENERGY AND RELIABILITY
MODERNIZATION OF AIRFIELD LIGHTING - PHASE 1 AND 2
VAULT E-1120 – WALL SECTIONS AND DETAILS

SCALE: AS SHOWN
EPROJECT NO.: 1291651
CONSTR. CONTR. NO.
NAVFAC DRAWING NO. 12691640
SHEET 107 OF 368
A-506

DRAWFORM REVISION: 10 MARCH 2009

FILE NAME: H:\56427 NAS Oceana\Architecture\Planset\Task 008\10-0863-008-A-506.dwg LAYOUT NAME: A-506 PLOTTED: Tuesday, March 24, 2015 - 10:06am USER: kjernigan

DOORS AND FRAMES

VAULT #	DOOR NUMBER	DOOR SIZE W	DOOR SIZE H	DOOR SIZE T	DOOR MAT	DOOR TYPE	DOOR FINISH	DOOR GLASS	LOUVER W	LOUVER H	FRAME MAT	FRAME TYPE	FRAME DETAILS FINISH	FRAME DETAILS HEAD	FRAME DETAILS JAMB(S)	FRAME DETAILS SILL	FIRE RATING LAB	FIRE RATING HOUR	HARDWARE SET NO.	LINTEL	REMARKS
E-3036	1	3'-0"	7'-0"	1 3/4"	HM	A	PT	–			HM	1	PT	1	2				2	–	2
	2	3'-0"	7'-0"	1 3/4"	HM	A	PT	–			HM	1	PT	5	6				3	–	
	3	(2)3'-0"	10'-0"	1 3/4"	HM	B	PT	–			HM	2	PT	1	2				1	–	1, 2
E-1120	1	3'-0"	7'-0"	1 3/4"	HM	A	PT	–			HM	1	PT	3	4				2	–	
	2	3'-0"	7'-0"	1 3/4"	HM	A	PT	–			HM	1	PT	5	6				3	–	
	3	(2)3'-0"	10'-0"	1 3/4"	HM	B	PT	–			HM	2	PT	3	4				1	–	1
E-101	1	3'-0"	7'-0"	1 3/4"	HM	A	PT	–			HM	1	PT	3	4				2	–	
	2	3'-0"	7'-0"	1 3/4"	HM	A	PT	–			HM	1	PT	5	6				3	–	
	3	(2)3'-0"	10'-0"	1 3/4"	HM	B	PT	–			HM	2	PT	3	4				1	–	1

NOTES: 1. OPERABLE TRANSOM WITH MANUAL FLUSH BOLTS.
2. DRIP EDGE.

LINTEL SCHEDULE

L-1	8" PRE-CAST CMU LINTEL – 8" BEARING AT EACH END
L-2	8" PRE-CAST CMU LINTEL – 8" BEARING AT EACH END & 4"x4"x5/16" STEEL ANGLE

ROOM FINISHES

	ROOM #	ROOM NAME	FLOOR MATERIAL	BASE/TRIM MATERIAL	WALL MATERIAL	CEILING MATERIAL	CEILING HEIGHT	REMARKS
E-3036	100	CONTROL ROOM	CONCRETE-SEALANT/HARDENER	PAINT	CMU – PAINT	EXPOSED-PAINT	VARIES	1
	101	ELECTRICAL ROOM	CONCRETE-SEALANT/HARDENER	PAINT	CMU – PAINT	EXPOSED-PAINT	VARIES	1
E-1120	100	CONTROL ROOM	CONCRETE-SEALANT/HARDENER	PAINT	CMU – PAINT	EXPOSED-PAINT	–	1
	101	ELECTRICAL ROOM	CONCRETE-SEALANT/HARDENER	PAINT	CMU – PAINT	EXPOSED-PAINT	–	1
E-101	100	CONTROL ROOM	CONCRETE-SEALANT/HARDENER	PAINT	CMU – PAINT	EXPOSED-PAINT	–	1
	101	ELECTRICAL ROOM	CONCRETE-SEALANT/HARDENER	PAINT	CMU – PAINT	EXPOSED-PAINT	–	1

NOTES: 1. PAINT ROOF DECK, STEEL JOISTS, CONDUIT, ETC.

FRAME TYPES

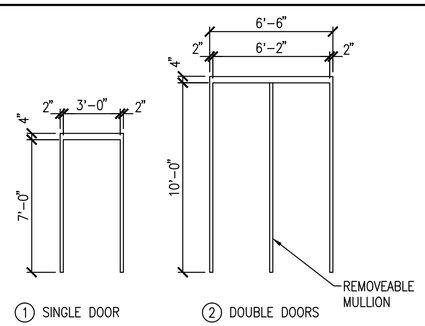

DOOR TYPES

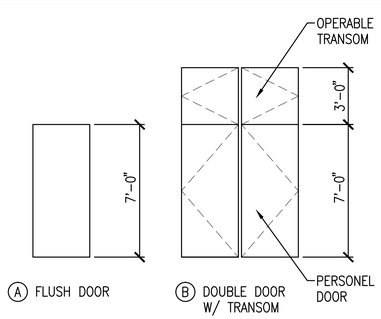

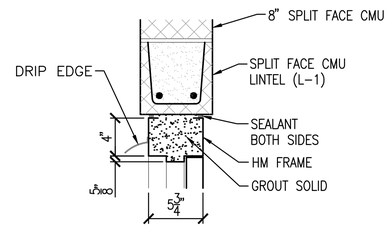

HEAD 1

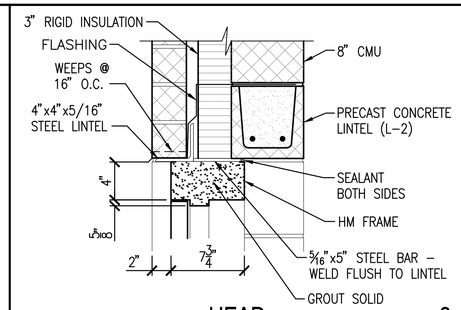

HEAD 3

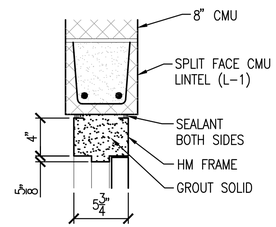

HEAD 5

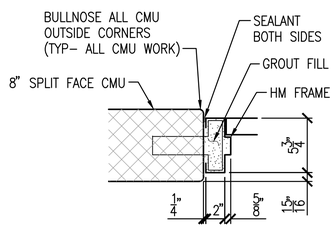

JAMB 2

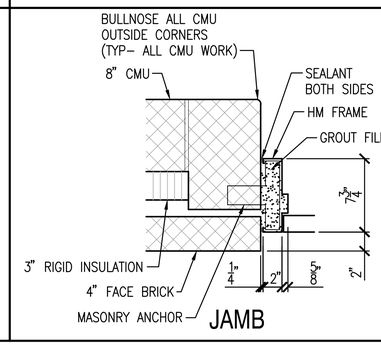

JAMB 4

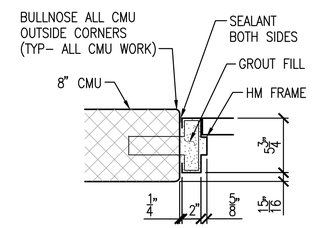

JAMB 6

GENERAL SHEET NOTES

1. THE WORK SHOWN ON THIS DRAWING IS COMMON TO BOTH PHASE 1 AND PHASE 2.

SYM	DESCRIPTION	DATE	APPR

NAVFAC

James Schneider
COMMONWEALTH OF VIRGINIA
JAMES ROBERT SCHNEIDER
Lic. No. 0401 011031
ARCHITECT

A/E INFO

APPROVED

FOR COMMANDER NAVFAC

ACTIVITY

SATISFACTORY TO DATE

DES DRE DRW DRE CHK JRS

PM/DM

BRANCH MANAGER

CHIEF ENG/ARCH

DEPARTMENT OF THE NAVY
NAVAL FACILITIES ENGINEERING COMMAND ~ MID-ATLANTIC
HR IPT
NAVAL FACILITIES ENGINEERING COMMAND
NAVAL AIR STATION OCEANA – VIRGINIA BEACH, VIRGINIA
NAVAL AIR STATION OCEANA
VIRGINIA BEACH, VIRGINIA
MODERNIZATION OF AIRFIELD LIGHTING - PHASE 1 AND 2
VAULT E-3036, E-101 & E-1120 SCHEDULES AND DETAILS

SCALE: AS SHOWN
EPROJECT NO.: 1291651
CONSTR. CONTR. NO.
NAVFAC DRAWING NO. 12691641
SHEET 108 OF 368

A-601

DRAWFORM REVISION: 10 MARCH 2009

FILE NAME: H:\56427 NAS Oceana\Architecture\Planset\Task 008\10-0863-008-A-601.dwg LAYOUT NAME: Layout1 PLOTTED: Tuesday, March 24, 2015 – 10:07am USER: kjernigan

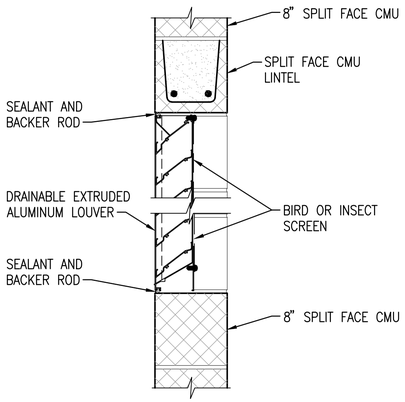

VAULT E-3036 (PHASE 2) LOUVER DETAIL (1)

SCALE: 1 1/2"=1'-0" A-501

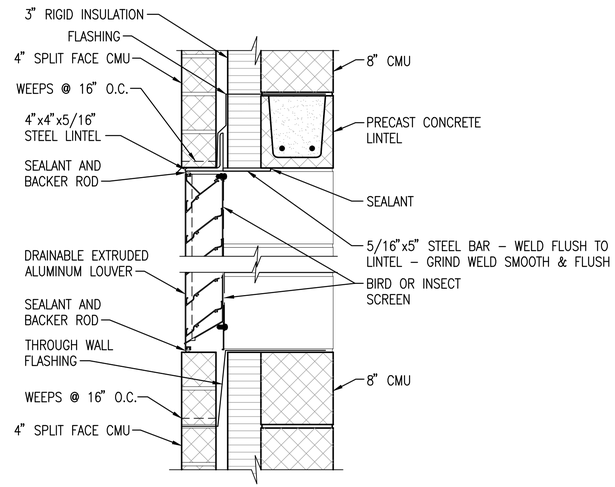

VAULT E-101 (PHASE 1) & E-1120 (PHASE 2) LOUVER DETAIL (2)

SCALE: 1 1/2"=1'-0" A-502, A-503

GRAPHIC SCALE

1 1/2"=1'-0" 3 2 1 0 3" 6" 12" 24"

SYM	DESCRIPTION	DATE	APPR

NAVFAC

James Schneider
COMMONWEALTH OF VIRGINIA
JAMES ROBERT SCHNEIDER
Lic. No. 0401 011031
ARCHITECT

A/E INFO

APPROVED

FOR COMMANDER NAVFAC

ACTIVITY

SATISFACTORY TO DATE

DES DRE DRW DRE CHK JRS

PM/DM

BRANCH MANAGER

CHIEF ENG/ARCH

DEPARTMENT OF THE NAVY
NAVAL FACILITIES ENGINEERING COMMAND
NAVAL FACILITIES ENGINEERING COMMAND – MID-ATLANTIC
NAVAL AIR STATION OCEANA – VIRGINIA BEACH, VIRGINIA
HR IPT
NAVAL AIR STATION OCEANA
VIRGINIA BEACH, VIRGINIA
ENERGY AND RELIABILITY
MODERNIZATION OF AIRFIELD LIGHTING - PHASE 1 AND 2
VAULT E-3036, E-101 & E-1120 MISCELLANEOUS DETAILS

SCALE: AS SHOWN
EPROJECT NO.: 1291651
CONSTR. CONTR. NO.
NAVFAC DRAWING NO. 12691642
SHEET 109 OF 368

A-602

DRAWFORM REVISION: 10 MARCH 2009

FILE NAME: H:\56427 NAS Oceana\Architectural\Phase4\Task 008\10-0863-008-A-602.dwg LAYOUT NAME: Layout1 PLOTTED: Tuesday, March 24, 2015 - 10:07am USER: kjernigan

MECHANICAL LEGEND

SYMBOL	DESCRIPTION
18"x12"	DUCT (FIRST FIGURE SIDE SHOWN)
D	DROP IN DIRECTION OF ARROW
R	RISE IN DIRECTION OF ARROW
S D	SMOKE DETECTOR
	AIR MEASURING DEVICE
	SUPPLY AIR DIFFUSER
	RETURN AIR GRILLE
	EXHAUST AIR GRILLE
FD	FIRE DAMPER
S	SMOKE DAMPER
F/S	COMBINATION FIRE/SMOKE DAMPER
	MANUAL VOLUME DAMPER
	SQUARE TO ROUND DUCT TRANSITION
	FLEXIBLE CONNECTION
	DUCTWORK SOUND LINING, 1" THICK
AD	ACCESS DOOR
	DUCT TRANSITION
	RECTANGULAR BRANCH TAKE-OFF
	BELL MOUTH BRANCH TAKE-OFF
	ROUND BRANCH TAKE-OFF
	CIRCULAR AIR DIFFUSER
	CIRCULAR DUCT DROP OFF BOTTOM
	SUPPLY AIR DEVICE WITH 2'x2' LAY-IN PANEL
	RETURN AIR DEVICE WITH 2'x2' LAY-IN PANEL
T	THERMOSTAT, SPACE TEMP SENSOR
EOD	ELECTRIC OPERATED DAMPER
ø	DIAMETER
X	SHEET KEYNOTE

ABBREVIATIONS

@	AT
ABV	ABOVE
AD	ACCESS DOOR
AFF	ABOVE FINISHED FLOOR
APD	AIR PRESSURE DROP
APPROX	APPROXIMATELY
ATC	AUTOMATIC TEMPERATURE CONTROL
BDD	BACKDRAFT DAMPER
BHP	BRAKE HORSEPOWER
BLDG	BUILDING
BLW	BELOW
BTM	BOTTOM
BTU/HR	BRITISH THERMAL UNITS PER HOUR
CD	CONDENSATE DRAIN
CFM	CUBIC FEET PER MINUTE
CLG	COOLING
CONC	CONCRETE
CONN	CONNECT, CONNECTION
CONT'N	CONTINUATION
CU	CONDENSING UNIT
D	SUPPLY AIR DIFFUSER, OR DEEP, DEPTH
DB	DECIBEL OR DRY BULB
DIA, ø	DIAMETER
DL	DOOR LOUVER
DN	DOWN
DPR	DAMPER
DWG	DRAWING
EA	EXHAUST AIR
EAT	ENTERING AIR TEMPERATURE
EDB	ENTERING DRY BULB
EF	EXHAUST FAN
EOD	ELECTRIC OPERATED DAMPER
ESP	EXTERNAL STATIC PRESSURE
EXH	EXHAUST
EXP	EXPANSION
FL	FLOOR
FPM	FEET PER MINUTE
FPS	FEET PER SECOND
FT, '	FOOT, FEET
GPM	GALLONS PER MINUTE
H	HIGH, HEIGHT
H2O	WATER
HP	HEAT PUMP
HZ	HERTZ
IN, "	INCH, INCHES
KW	KILOWATTS
L	LONG, LENGTH
LAT	LEAVING AIR TEMPERATURE
LBS	POUNDS
LBS/HR	POUNDS PER HOUR
LDB	LEAVING DRY BULB
LF	LINEAR FEET
MBH	THOUSAND BRITISH THERMAL UNITS PER HOUR
MECH	MECHANICAL
MFR	MANUFACTURER
MIN	MINIMUM
MOD	MOTOR OPERATED DAMPER
MTD	MOUNTED
NC	NOISE CRITERIA OR NORMALLY CLOSED
NIC	NOT IN CONTRACT
No	NUMBER
OA	OUTDOOR AIR
OAT	OUTDOOR AIR TEMPERATURE
OC	ON CENTER
%	PERCENT
REQ'D	REQUIRED
RLA	RUNNING LOAD AMPERES
RM	ROOM
RPM	REVOLUTIONS PER MINUTE
RP	REFRIGERANT PIPING
RS	REFRIGERANT SUCTION
SF	SUPPLY FAN OR SQUARE FEET
S/M	SHEET METAL
SP	STATIC PRESSURE
SPEC	SPECIFICATION
SQ	SQUARE
SQ FT	DROP SQUARE FOOT
S/S	STAINLESS STEEL
STL	STEEL
TEMP, T	TEMPERATURE
TG	TRANSFER GRILLE
TSP	TOTAL STATIC PRESSURE
TYP	TYPICAL
V	VOLTS, VACUUM PIPE
VEL	VELOCITY
VIB	VIBRATION
W/	WITH
W/O	WITHOUT

GENERAL NOTES

1. GENERAL NOTES ON THIS DRAWING ARE APPLICABLE TO EACH DRAWING OF THIS SET. REFER TO DRAWINGS FOR SPECIFIC NOTES APPLICABLE TO EACH DRAWING.
2. CONTRACTOR SHALL THOROUGHLY REVIEW ALL MECHANICAL, ELECTRICAL, AND ARCHITECTURAL DRAWINGS, PRIOR TO ANY WORK BEING PERFORMED.
3. DRAWINGS DO NOT INDICATE ALL PIPING, ELECTRICAL CONDUITS, SUPPORTS, CABLE TRAYS OR STRUCTURAL ELEMENTS THAT ARE TYPICALLY BY OTHER TRADES. REVIEW DRAWINGS OF OTHER TRADES FOR INTERFERENCE OF WORK PRIOR TO INSTALLATION.
4. CONTRACTOR SHALL INSTALL EQUIPMENT IN ACCORDANCE WITH MANUFACTURER'S RECOMMENDATIONS.
5. IT IS THE INTENTION OF THE DRAWINGS TO COVER ALL WORK AND MATERIAL FOR A COMPLETE INSTALLATION. ANY EQUIPMENT, HARDWARE, AND/OR DEVICES NORMALLY UTILIZED FOR A COMPLETE INSTALLATION, THOUGH NOT SPECIFICALLY MENTIONED OR SHOWN ON THE DRAWINGS, SHALL BE FURNISHED AND INSTALLED BY THE CONTRACTOR AS PART OF HIS WORK.
6. ENTIRE INSTALLATION, INCLUDING MATERIALS, EQUIPMENT, AND WORKMANSHIP, SHALL CONFORM WITH ALL APPLICABLE LAWS, CODES, AND REGULATIONS OF MUNICIPAL, STATE, AND FEDERAL AUTHORITIES, THE LATEST EDITION OF THE STATE BUILDING CODES, AND OTHER REGULATORY BODIES HAVING JURISDICTION OVER THE CLASS OF WORK.
7. DUCTWORK AND PIPING ARRANGEMENTS ARE DIAGRAMMATIC.
8. ARRANGE PIPING AND DUCTWORK, AS REQUIRED, TO CLEAR STRUCTURE, DUCTS, CONDUITS, ETC. ALLOWING SPACE FOR PIPE HANGERS AND ACCESS TO VALVES, FILTERS, AND MAINTENANCE OF EQUIPMENT.
9. ALL WORK SHALL BE DONE IN ACCORDANCE WITH NATIONAL ELECTRICAL CODE, NFPA 70, SMACNA, NFPA 96A, AND UL 300.
10. PROVIDE ALL NECESSARY CONTACTORS, STARTERS, TRANSFORMERS, RELAYS, WIRING AND CONDUIT NECESSARY FOR COMPLETE OPERATIONAL HEATING, VENTILATING, AND COOLING SYSTEMS.
11. ALL DIMENSIONS AND PIPE SIZES ARE IN INCHES, UNLESS NOTED OTHERWISE.

DESIGN CRITERA

	DESIGN CONDITION
OUTSIDE AIR	SUMMER: 93.7 °F DB/76.7 °F WB
	WINTER: 20.4 °F DB
VAULT E-3036	80 °F DB, COOLING; 55 °DB HEATING
VAULT E-101	80 °F DB, COOLING; 55 °DB HEATING
VAULT E-1120	80 °F DB, COOLING; 55 °DB HEATING

SYM	DESCRIPTION	DATE	APPR

NAVFAC

Matthew J. Grice
COMMONWEALTH OF VIRGINIA
MATTHEW J. GRICE
Reg. No. 046036
PROFESSIONAL ENGINEER
SEAL

A/E INFO

APPROVED

FOR COMMANDER NAVFAC

ACTIVITY

SATISFACTORY TO DATE

DES KC DRW KC CHK MJG

PM/DM

BRANCH MANAGER

CHIEF ENG/ARCH

DEPARTMENT OF THE NAVY
NAVAL FACILITIES ENGINEERING COMMAND
HR IPT
NAVAL FACILITIES ENGINEERING COMMAND ~ MID-ATLANTIC
NAVAL AIR STATION OCEANA – VIRGINIA BEACH, VIRGINIA
NAVAL AIR STATION OCEANA
VIRGINIA BEACH, VIRGINIA
ENERGY AND RELIABILITY
MODERNIZATION OF AIRFIELD LIGHTING - PHASE 1 AND 2
MECHANICAL LEGEND, ABBREVIATIONS, AND NOTES

SCALE: NONE

EPROJECT NO.: 1291651

CONSTR. CONTR. NO.

NAVFAC DRAWING NO.
12691643

SHEET 110 OF 368

M-001

DRAWFORM REVISION: 10 MARCH 2009

FILE NAME: H:\56427 NAS Oceana\Mechanical\Planset\Task 008\10-0863-008-M-001.dwg LAYOUT NAME: M-001 PLOTTED: Tuesday, March 24, 2015 - 10:16am USER: kjernigan

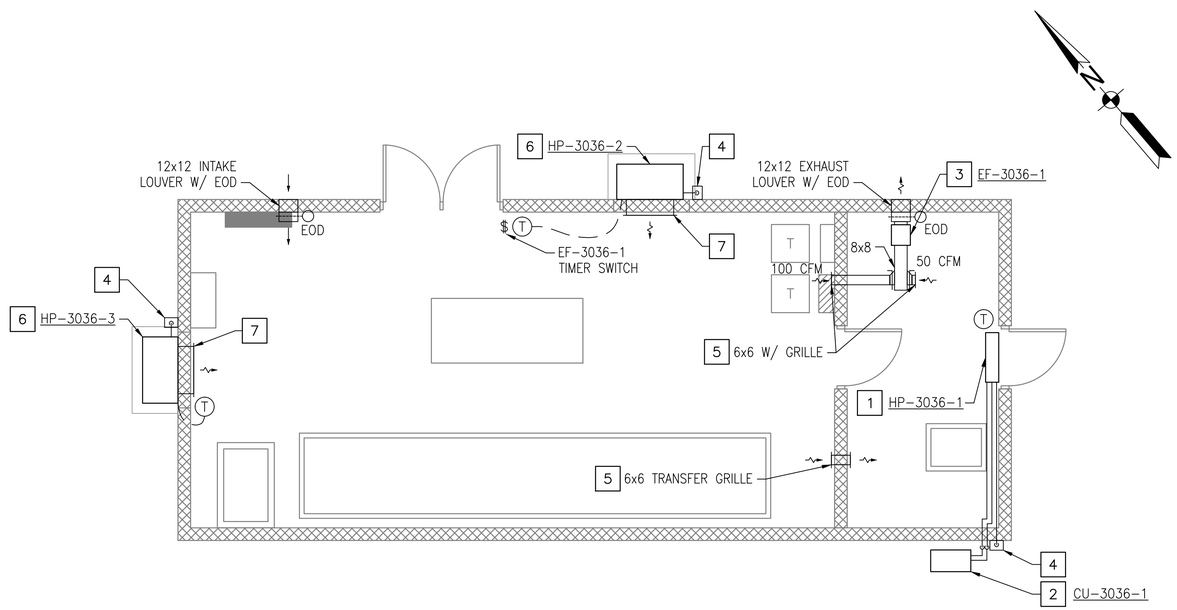

VAULT E-3036 - MECHANICAL PLAN

SCALE: 1/4" = 1'-0"

GENERAL SHEET NOTES

1. REFER TO DRAWING M-001 FOR LEGEND, ABBREVIATIONS, AND NOTES.
2. REFER TO ARCHITECTURAL, CIVIL, STRUCTURAL, AND ELECTRICAL DRAWINGS FOR ADDITIONAL WORK.
3. REFER TO DRAWING ED402 FOR DEMOLITION WORK PLAN AND NOTES.
4. THE CONTRACTOR SHALL VERIFY ALL DIMENSIONS AND EXISTING CONDITIONS IN THE FIELD. SHOULD CONDITIONS BE DISCOVERED THAT PREVENT EXECUTION OF WORK AS INDICATED ON DRAWING, THE CONTRACTOR SHALL IMMEDIATELY NOTIFY THE ENGINEER IN WRITING AND AWAIT DIRECTION BEFORE PROCEEDING WITH THE WORK.
5. DAMAGE TO EXISTING FACILITIES AND EQUIPMENT SHALL BE REPAIRED OR REPLACED IMMEDIATELY BY THE CONTRACTOR AT NO ADDITIONAL COST TO THE OWNER.
6. REPAIR AND PATCH ANY DISTURBED AREAS TO MATCH EXISTING CONDITIONS.
7. PIPING ON THIS SHEET IS INTENDED TO BE DIAGRAMMATIC. COORDINATE WITH FIELD CONDITIONS FOR EXACT PIPE ROUTING. SEE MECHANICAL DETAILS ON DRAWING M-501 FOR CONNECTION DETAILS.
8. PIPING SHALL NOT BE INSTALLED ABOVE ELECTRICAL EQUIPMENT. SEE DRAWING E-403 FOR EQUIPMENT LOCATIONS.
9. REFER TO EQUIPMENT SCHEDULES ON DRAWING M-601 FOR ADDITIONAL INFORMATION.
10. THE WORK SHOWN ON THIS DRAWING IS TO BE COMPLETED UNDER PHASE 2.

CONSTRUCTION KEYNOTES

1. PROVIDE DUCTLESS HEAT PUMP SPLIT SYSTEM WITH PIPING AND CONTROLS. REFER TO DETAIL 2 ON DRAWING M-501 AND SCHEDULE ON DRAWING M-601.
2. INSTALL WALL-MOUNTED CONDENSING UNIT OUTDOORS. REFER TO MECHANICAL DETAIL 3 ON DRAWING M-501 FOR ADDITIONAL INFORMATION.
3. SUPPORT EXHAUST FAN FROM STRUCTURE ABOVE. COORDINATE EXHAUST FAN HEIGHT WITH ARCHITECTURAL LOUVER HEIGHT. FAN SHALL BE CONTROLLED BY WALL-MOUNTED TIMER SWITCH.
4. PROVIDE SPLASH BLOCK AT GRADE FOR CONDENSATE PIPING. PIPING SHALL BE LINE SIZE OF EQUIPMENT OUTLET.
5. PROVIDE WITH 6x6 GRILLE. BOTTOM OF GRILLE MIN. 9'-4" ABOVE FINISHED FLOOR.
6. PROVIDE WALL-MOUNTED PACKAGED HEAT PUMP UNIT. INSTALL 3 FEET ABOVE GRADE ON CONCRETE PEDESTAL. COORDINATE WITH STRUCTURAL DRAWINGS. SEE DETAIL 6 ON DRAWING M-501 FOR ADDITIONAL INFORMATION.
7. PROVIDE 30x10 SUPPLY AND 30x16 RETURN GRILLE.

KEY MAP C

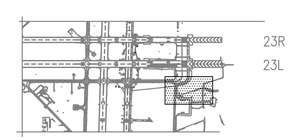

GRAPHIC SCALE

1/4"=1'-0"

1' 0 2' 4' 8'

SYM	DESCRIPTION	DATE	APPR

NAVFAC

Matthew Grice

COMMONWEALTH OF VIRGINIA
MATTHEW J. GRICE
Lic. No. 046036
PROFESSIONAL ENGINEER

A/E INFO

APPROVED

FOR COMMANDER NAVFAC

ACTIVITY

SATISFACTORY TO DATE

DES KC DRW KC CHK MJG

PM/DM

BRANCH MANAGER

CHIEF ENG/ARCH

DEPARTMENT OF THE NAVY
NAVAL FACILITIES ENGINEERING COMMAND
NAVAL FACILITIES ENGINEERING COMMAND ~ MID-ATLANTIC
HR IPT
NAVAL AIR STATION OCEANA – VIRGINIA BEACH, VIRGINIA

NAVAL AIR STATION OCEANA
VIRGINIA BEACH, VIRGINIA
ENERGY AND RELIABILITY
MODERNIZATION OF AIRFIELD LIGHTING - PHASE 1 AND 2

VAULT E-3036 – MECHANICAL PLAN

SCALE: 1/4" = 1'-0"
EPROJECT NO.: 1291651
CONSTR. CONTR. NO.
NAVFAC DRAWING NO. 12691644
SHEET 111 OF 368

M-401

DRAWFORM REVISION: 10 MARCH 2009

FILE NAME: H:\56427 NAS Oceana\Mechanical\Planset\Task 008\10-0863-008-M-401.dwg LAYOUT NAME: M-401 PLOTTED: Tuesday, March 24, 2015 - 10:11am USER: kjernigan

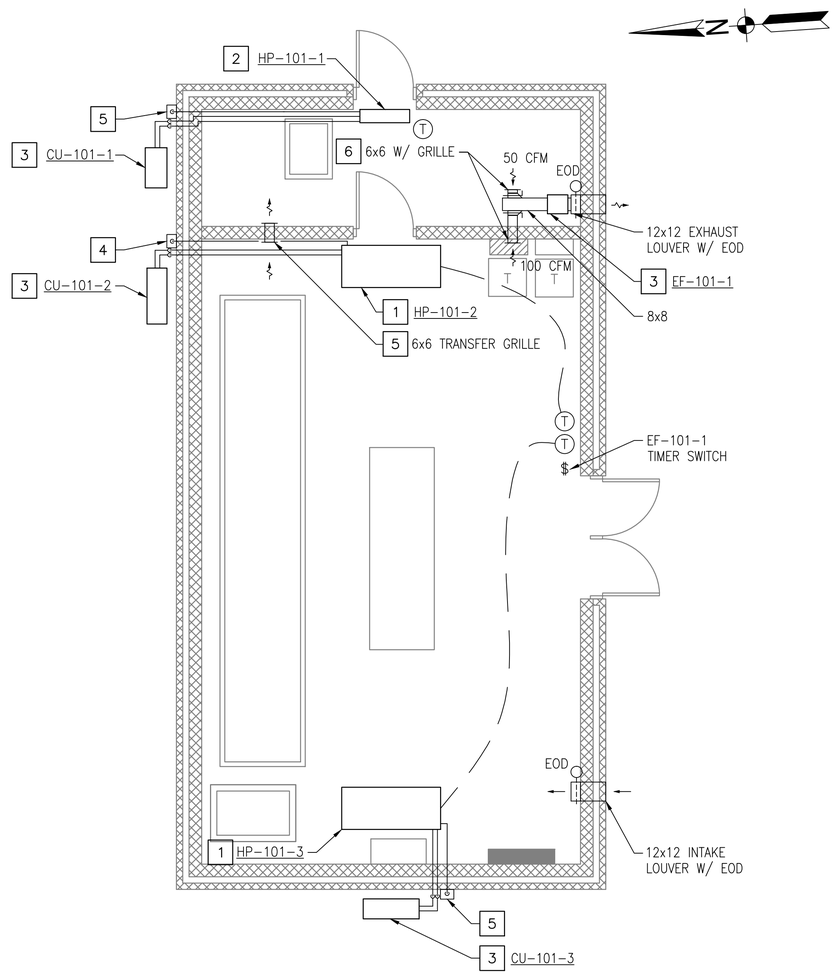

VAULT E-101 - MECHANICAL PLAN

SCALE: 1/4"= 1'-0"

GENERAL SHEET NOTES

1. REFER TO DRAWING M-001 FOR LEGEND, ABBREVIATIONS, AND NOTES.
2. REFER TO ARCHITECTURAL, CIVIL, STRUCTURAL, AND ELECTRICAL DRAWINGS FOR ADDITIONAL WORK.
3. THE CONTRACTOR SHALL VERIFY ALL DIMENSIONS AND EXISTING CONDITIONS IN THE FIELD. SHOULD CONDITIONS BE DISCOVERED THAT PREVENT EXECUTION OF WORK AS INDICATED ON DRAWING, THE CONTRACTOR SHALL IMMEDIATELY NOTIFY THE ENGINEER IN WRITING AND AWAIT DIRECTION BEFORE PROCEEDING WITH THE WORK.
4. DAMAGE TO EXISTING FACILITIES AND EQUIPMENT SHALL BE REPAIRED OR REPLACED IMMEDIATELY BY THE CONTRACTOR AT NO ADDITIONAL COST TO THE OWNER.
5. REPAIR AND PATCH ANY DISTURBED AREAS TO MATCH EXISTING CONDITIONS.
6. PIPING ON THIS SHEET IS INTENDED TO BE DIAGRAMMATIC. COORDINATE WITH FIELD CONDITIONS FOR EXACT PIPE ROUTING. SEE MECHANICAL DETAILS ON DRAWING M-501 FOR CONNECTION DETAILS.
7. PIPING SHALL NOT BE INSTALLED ABOVE ELECTRICAL EQUIPMENT. SEE DRAWING E-406 FOR EQUIPMENT LOCATIONS.
8. INSTALL SPLIT SYSTEM INDOOR UNIT AND ASSOCIATED PIPING MINIMUM OF 9'-6" ABOVE FINISHED FLOOR.
9. REFER TO EQUIPMENT SCHEDULES ON DRAWING M-601 FOR MORE INFORMATION.
10. THE WORK SHOWN ON THIS DRAWING IS TO BE COMPLETED UNDER PHASE 1.

CONSTRUCTION KEYNOTES

1. PROVIDE DUCTLESS HEAT PUMP SPLIT SYSTEM WITH PIPING AND CONTROLS. REFER TO DETAIL 1 ON DRAWING M-501 AND SCHEDULE ON DRAWING M-601. INSTALL SPLIT SYSTEM INDOOR UNIT AND ASSOCIATED PIPING MINIMUM OF 9'-6" ABOVE FINISHED FLOOR.
2. PROVIDE DUCTLESS HEAT PUMP SPLIT SYSTEM WITH PIPING AND CONTROLS. REFER TO DETAIL 2 ON DRAWING M-501 AND SCHEDULE ON DRAWING M-601.
3. INSTALL WALL-MOUTED CONDENSING UNIT OUTDOORS. REFER TO MECHANICAL DETAIL 3 ON DRAWING M-501 FOR ADDITIONAL INFORMATION.
4. SUPPORT EXHAUST FAN FROM STRUCTURE ABOVE. COORDINATE EXHAUST FAN HEIGHT WITH ARCHITECTURAL LOUVER HEIGHT. FAN SHALL BE CONTROLLED BY WALL-MOUNTED TIMER SWITCH.
5. PROVIDE SPLASH BLOCK AT GRADE FOR CONDENSATE PIPING. PIPING SHALL BE LINE SIZE OF EQUIPMENT OUTLET. COORDINATE PIPE ROUTING WITH ELECTRICAL EQUIPMENT.
6. PROVIDE WITH 6x6 GRILLE. BOTTOM OF GRILLE MIN. 9'-4" ABOVE FINISHED FLOOR.

KEY MAP C

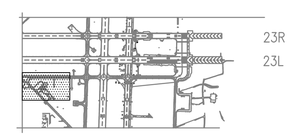

GRAPHIC SCALE

1/4"=1'-0"

1' 0 2' 4' 8'

SYM	DESCRIPTION	DATE	APPR

NAVFAC

MATTHEW J. GRICE
Reg. No. 046036
PROFESSIONAL ENGINEER
COMMONWEALTH OF VIRGINIA
SEAL

A/E INFO

APPROVED

FOR COMMANDER NAVFAC

ACTIVITY

SATISFACTORY TO DATE

DES KC DRW KC CHK MJG

PM/DM

BRANCH MANAGER

CHIEF ENG/ARCH

DEPARTMENT OF THE NAVY
NAVAL FACILITIES ENGINEERING COMMAND
HR IPT
NAVAL FACILITIES ENGINEERING COMMAND – MID-ATLANTIC
NAVAL AIR STATION OCEANA – VIRGINIA BEACH, VIRGINIA
NAVAL AIR STATION OCEANA
VIRGINIA BEACH, VIRGINIA
ENERGY AND RELIABILITY
MODERNIZATION OF AIRFIELD LIGHTING - PHASE 1 AND 2
VAULT E-101 – MECHANICAL PLAN

SCALE: 1/4" = 1'-0"

EPROJECT NO.: 1291651

CONSTR. CONTR. NO.

NAVFAC DRAWING NO.
12691645

SHEET 112 OF 368

M-402

DRAWFORM REVISION: 10 MARCH 2009

FILE NAME: H:\56427 NAS Oceana\Mechanical\Planset\Task 008\10-0863-008-M-402.dwg LAYOUT NAME: M-402 PLOTTED: Tuesday, March 24, 2015 - 10:14am USER: kjennigan

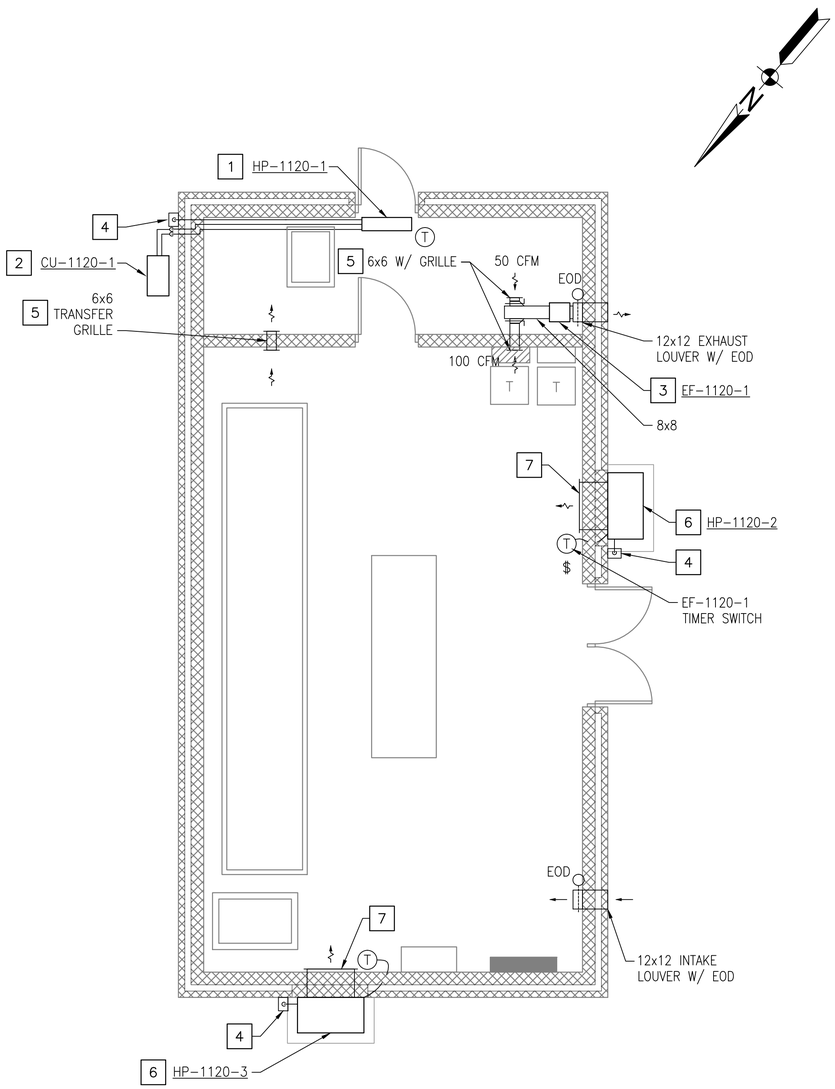

VAULT E-1120 - MECHANICAL PLAN

SCALE: 1/4" = 1'-0"

GENERAL SHEET NOTES

1. REFER TO DRAWING M-001 FOR LEGEND, ABBREVIATIONS, AND NOTES.
2. REFER TO ARCHITECTURAL, CIVIL, STRUCTURAL, AND ELECTRICAL DRAWINGS FOR ADDITIONAL WORK.
3. THE CONTRACTOR SHALL VERIFY ALL DIMENSIONS AND EXISTING CONDITIONS IN THE FIELD. SHOULD CONDITIONS BE DISCOVERED THAT PREVENT EXECUTION OF WORK AS INDICATED ON DRAWING, THE CONTRACTOR SHALL IMMEDIATELY NOTIFY THE ENGINEER IN WRITING AND AWAIT DIRECTION BEFORE PROCEEDING WITH THE WORK.
4. DAMAGE TO EXISTING FACILITIES AND EQUIPMENT SHALL BE REPAIRED OR REPLACED IMMEDIATELY BY THE CONTRACTOR AT NO ADDITIONAL COST TO THE OWNER.
5. REPAIR AND PATCH ANY DISTURBED AREAS TO MATCH EXISTING CONDITIONS.
6. PIPING ON THIS SHEET IS INTENDED TO BE DIAGRAMMATIC. COORDINATE WITH FIELD CONDITIONS FOR EXACT PIPE ROUTING. SEE MECHANICAL DETAILS ON DRAWING M-501 FOR CONNECTION DETAILS.
7. PIPING SHALL NOT BE INSTALLED ABOVE ELECTRICAL EQUIPMENT. SEE DRAWING E-409 FOR EQUIPMENT LOCATIONS.
8. REFER TO EQUIPMENT SCHEDULES ON DRAWING M-601 FOR ADDITIONAL INFORMATION.
9. THE WORK SHOWN ON THIS DRAWING IS TO BE COMPLETED UNDER PHASE 2.

CONSTRUCTION KEYNOTES

1. PROVIDE DUCTLESS HEAT PUMP SPLIT SYSTEM WITH PIPING AND CONTROLS. REFER TO DETAIL 2 ON DRAWING M-501 AND SCHEDULE ON DRAWING M-601.
2. INSTALL WALL-MOUNTED CONDENSING UNIT OUTDOORS. REFER TO MECHANICAL DETAIL 3 ON DRAWING M-501 FOR ADDITIONAL INFORMATION.
3. SUPPORT EXHAUST FAN FROM STRUCTURE ABOVE. COORDINATE EXHAUST FAN HEIGHT WITH ARCHITECTURAL LOUVER HEIGHT. FAN SHALL BE CONTROLLED BY WALL-MOUNTED TIMER SWITCH.
4. PROVIDE SPLASH BLOCK AT GRADE FOR CONDENSATE PIPING. PIPING SHALL BE LINE SIZE OF EQUIPMENT OUTLET.
5. PROVIDE WITH 6x6 GRILLE. BOTTOM OF GRILLE MIN. 9'-4" ABOVE FINISHED FLOOR.
6. PROVIDE WALL-MOUNTED PACKAGED HEAT PUMP UNIT. INSTALL 3 FEET ABOVE GRADE ON CONCRETE PEDESTAL. COORDINATE WITH STRUCTURAL DRAWINGS. SEE DETAIL 6 ON DRAWING M-501 FOR ADDITIONAL INFORMATION.
7. PROVIDE 30x10 SUPPLY AND 30x16 RETURN GRILLE.

KEY MAP B

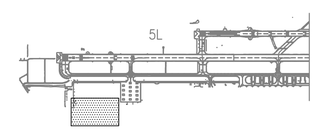

GRAPHIC SCALE

1/4"=1'-0"

1' 0 2' 4' 8'

SYM	DESCRIPTION	DATE	APPR

NAVFAC

Matthew J. Grice

MATTHEW J. GRICE
Lic. No. 046036
PROFESSIONAL ENGINEER
COMMONWEALTH OF VIRGINIA
SEAL

A/E INFO

APPROVED

FOR COMMANDER NAVFAC

ACTIVITY

SATISFACTORY TO DATE

DES KC DRW KC CHK MJG

PM/DM

BRANCH MANAGER

CHIEF ENG/ARCH

DEPARTMENT OF THE NAVY
NAVAL FACILITIES ENGINEERING COMMAND
HR IPT
NAVAL FACILITIES ENGINEERING COMMAND ~ MID-ATLANTIC
NAVAL AIR STATION OCEANA ~ VIRGINIA BEACH, VIRGINIA
NAVAL AIR STATION OCEANA
VIRGINIA BEACH, VIRGINIA
ENERGY AND RELIABILITY
MODERNIZATION OF AIRFIELD LIGHTING - PHASE 1 AND 2
VAULT E-1120 – MECHANICAL PLAN

SCALE: 1/4" = 1'-0"

EPROJECT NO.: 1291651

CONSTR. CONTR. NO.

NAVFAC DRAWING NO.
12691646

SHEET 113 OF 368

M-403

DRAWFORM REVISION: 10 MARCH 2009

FILE NAME: H:\56427 NAS Oceana\Mechanical\Planset\Task 008\10-0863-008-M-403.dwg LAYOUT NAME: M-403 PLOTTED: Tuesday, March 24, 2015 - 10:16am USER: kjernigan

GENERAL SHEET NOTES

1. THE WORK SHOWN ON THIS DRAWING IS COMMON TO BOTH PHASE 1 AND PHASE 2.

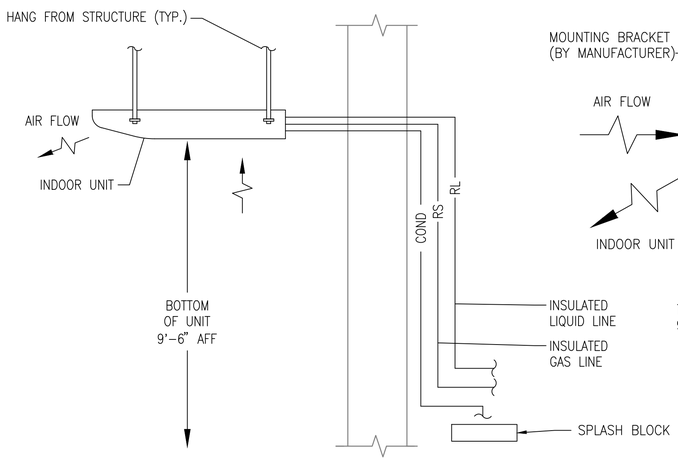

1. SEE MANUFACTURER'S INSTALLATION INSTRUCTIONS FOR MOUNTING AND REFRIGERANT PIPING DETAILS.
2. REFER TO MECHANICAL PLANS FOR REFRIGERANT PIPE ROUTING.
3. COORDINATE INSTALLATION OF UNIT WITH CLEARANCE REQUIREMENTS OF ELECTRICAL EQUIPMENT.

HEAT PUMP INDOOR UNIT DETAIL (1)
NTS

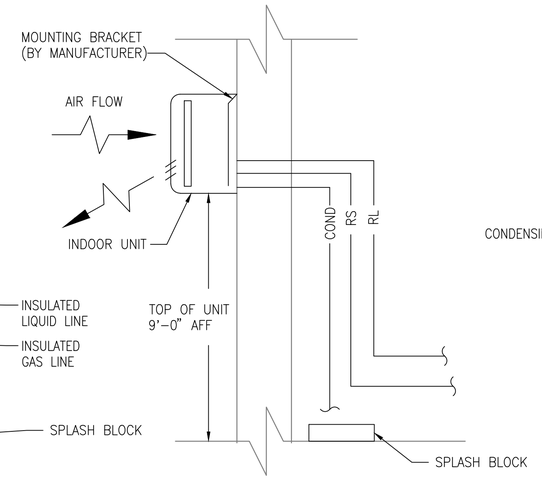

1. SEE MANUFACTURER'S INSTALLATION INSTRUCTIONS FOR MOUNTING AND REFRIGERANT PIPING DETAILS
2. REFER TO THIS SHEET FOR REFRIGERANT PIPE ROUTING.

HEAT PUMP INDOOR UNIT DETAIL (2)
NTS

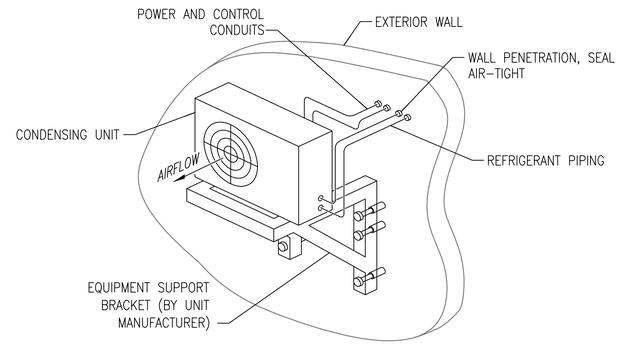

1. MOUNT UNIT 6" MINIMUM FROM MOUNTING WALL.
2. MOUNT TO WALL TO PROVIDE 3 FEET OF CLEARANCE FROM GRADE TO BOTTOM OF UNIT.
3. REFER TO MECHANICAL PLANS FOR GENERAL REFRIGERANT PIPE ROUTING.
4. PIPING SHALL BE INSULATED. SEE SPECIFICATIONS FOR MORE INFORMATION.

HEAT PUMP OUTDOOR UNIT DETAIL (3)
NTS

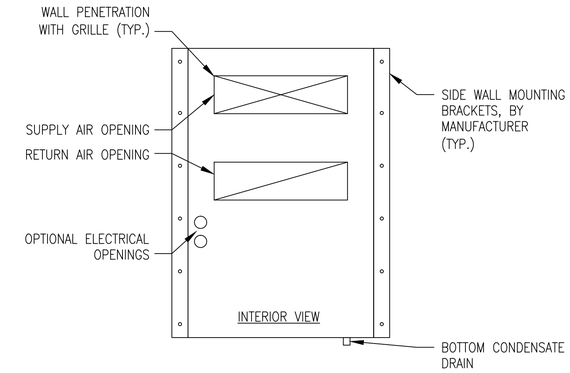

1. SEE MANUFACTURER'S INSTALLATION INSTRUCTIONS FOR ADDITIONAL INFORMATION.
2. COORDINATE INSTALLATION AND WALL OPENING WITH ARCHITECTURAL AND STRUCTURAL.
3. WEIGHT OF UNIT SHALL BE CARRIED BY 3-FOOT TALL CONCRETE PEDESTAL. SET UNIT ON CONCRETE PEDESTAL PRIOR TO FASTENING TO WALL. BOTTOM INSTALLATION BRACKET NOT REQUIRED.

PACKAGED HEAT PUMP MOUNTING DETAIL (4)
NTS

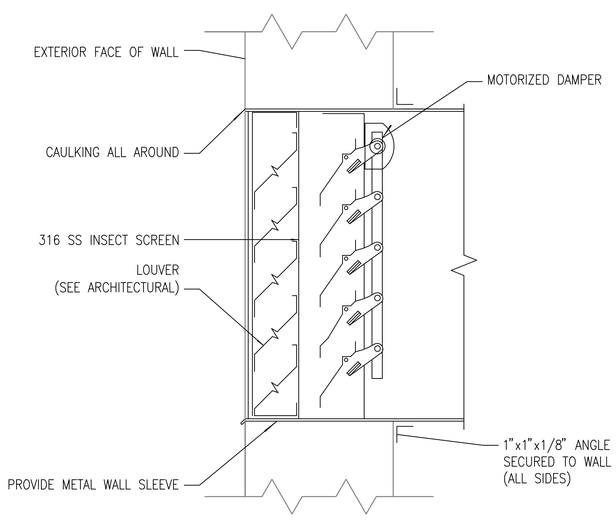

1. INTAKE LOUVERS SHALL BE PROVIDED AS STORM PROOF TYPE.

INTAKE/EXHAUST LOUVER DETAIL (5)
NTS

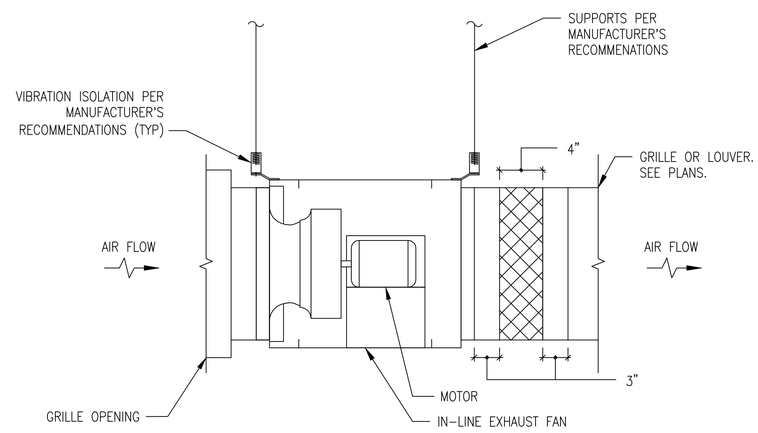

IN-LINE EXHAUST FAN DETAIL (6)
NTS

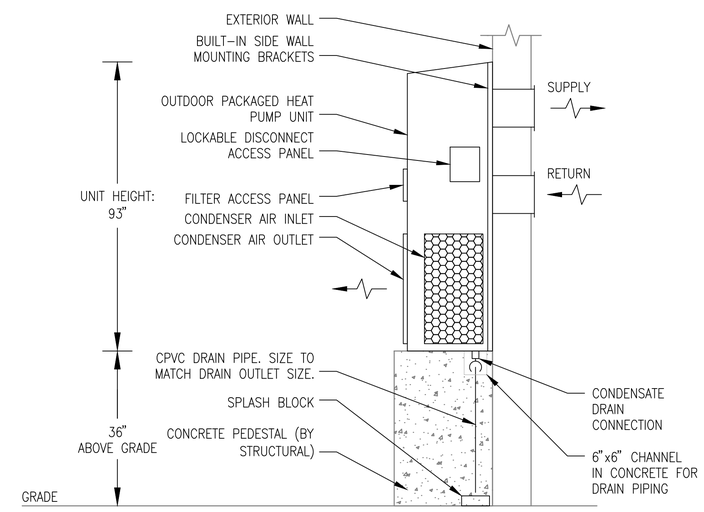

1. SEE MANUFACTURER'S INSTALLATION INSTRUCTIONS FOR ADDITIONAL INFORMATION.
2. COORDINATE INSTALLATION AND WALL OPENING WITH ARCHITECTURAL AND STRUCTURAL.
3. WEIGHT OF UNIT SHALL BE CARRIED BY 3-FOOT TALL CONCRETE PEDESTAL. SET UNIT ON CONCRETE PEDESTAL PRIOR TO FASTENING TO WALL.

PACKAGED HEAT PUMP DETAIL (7)
NTS

SYM	DESCRIPTION	DATE	APPR

NAVFAC

MATTHEW J. GRICE
Lic. No. 046036
PROFESSIONAL ENGINEER
COMMONWEALTH OF VIRGINIA

A/E INFO

APPROVED

FOR COMMANDER NAVFAC

ACTIVITY

SATISFACTORY TO DATE

DES KC DRW KC CHK MJG

PM/DM

BRANCH MANAGER

CHIEF ENG/ARCH

DEPARTMENT OF THE NAVY
NAVAL FACILITIES ENGINEERING COMMAND
HR IPT
NAVAL FACILITIES ENGINEERING COMMAND – MID-ATLANTIC
NAVAL AIR STATION OCEANA – VIRGINIA BEACH, VIRGINIA
NAVAL AIR STATION OCEANA
VIRGINIA BEACH, VIRGINIA
ENERGY AND RELIABILITY
MODERNIZATION OF AIRFIELD LIGHTING - PHASE 1 AND 2
MECHANICAL DETAILS

SCALE: NOT TO SCALE

EPROJECT NO.: 1291651

CONSTR. CONTR. NO.

NAVFAC DRAWING NO.
12691647

SHEET 114 OF 368

M-501

DRAWFORM REVISION: 10 MARCH 2009

FILE NAME: H:\56427 NAS Oceana\Mechanical\Planset\Task 008\10-0863-008-M-501.dwg LAYOUT NAME: M-501 PLOTTED: Tuesday, March 24, 2015 - 10:17am USER: kjennigan

SPLIT SYSTEM AIR-TO-AIR HEAT PUMP SCHEDULE

MARK	INDOOR UNIT											SETPOINTS		OUTDOOR UNIT											REMARKS
	FAN DATA					COIL PERFORMANCE												ELECTRICAL					MIN. SYSTEM EFFICIENCY		
				ELECTRICAL		COOLING			HEATING																
	TOTAL CFM	OA CFM	ESP (IN W.G.)	VOLT/PH	NEMA STARTER	TOTAL (MBH)	SENS. (MBH)	EAT (°FDB/°FWB)	DESIGN (MBH)	SUPP. HTG (KW)	EAT (°FDB)	COOLING DEG F	HEATING DEG F	NOMINAL TONS	NO. COMPRESSORS	STAGES	REFRIGERANT TYPE	VOLTS/PH	MCA	MOCP	FLA	C.O.P.	SEER	HSPF	
HP-3036-1 / CU-3036-1	381	0	–	208/1	4X	9.0	8.1	80	12.0	0	55	80	55	0.75	1	INVERTER	R-401A	208/1	8	15	2.9	4.4	24	12.5	1, 2, 3, 5, 6, 7
HP-101-1 / CU-101-1	381	0	–	208/1	4X	9.0	8.1	80	12.0	0	55	80	55	0.75	1	INVERTER	R-401A	208/1	8	15	2.9	4.4	24	12.5	1, 2, 3, 5, 6, 7
HP-101-2 / CU-101-2	830	0	–	208/1	4X	36.0	26.1	80	37.5	0	55	80	58	3.0	1	INVERTER	R-401A	208/1	27	30	18.6	2.6	14	8.1	1, 2, 3, 4, 5, 6, 7
HP-101-3 / CU-101-3	830	0	–	208/1	4X	36.0	26.1	80	37.5	0	55	77	55	3.0	1	INVERTER	R-401A	208/1	27	30	18.6	2.6	14	8.1	1, 2, 3, 4, 5, 6, 7
HP-1120-1 / CU-1120-1	381	0	–	208/1	4X	9.0	8.1	80	12.0	0	55	80	55	0.75	1	INVERTER	R-401A	208/1	8	15	2.9	4.4	24	12.5	1, 2, 3, 5, 6, 7

NOTES:
1. MINIMUM SEER/HSPF SHALL BE NO LESS THAN THE RECOMMENDED EFFICIENCY LISTED BY ENERGY STAR AND FEDERAL ENERGY MANAGEMENT PROGRAM (FEMP) FOR THE EQUIPEMENT LISTED. SEE WWW.EREN.DOE.GOV/FEMP/PROCUREMENT FOR REQUIREMENTS.
2. PROVIDE THERMOSTAT WITH LOCKABLE ENCLOSURE.
3. SYSTEM SHALL BE CONTROLLED BY INTEGRAL AUTOMATIC CONTROLS VIA WALL-MOUNTED WIRED CONTROLLER.
4. INSTALL INDOOR UNIT TO PROVIDE 9'-6" OF CLEARANCE FROM BOTTOM OF UNIT.
5. REFRIGERANT PIPING SHALL BE INSULATED.
6. PROVIDE MANUFACTURER'S REQUIRED EQUIPMENT CLEARANCES FOR UNITS.
7. PROVIDE OUTDOOR UNIT WITH MANUFACTURER WALL-MOUNTING BRACKET.

AIR-COOLED PACKAGED TERMINAL HEAT PUMP SCHEDULE

MARK	FAN DATA		COOLING			HEATING			SETPOINTS		ELECTRICAL				C.O.P.	MIN. SYSTEM EFFICIENCY	REFRIGERANT TYPE	REMARKS
	TOTAL CFM	OA CFM	TOTAL (MBH)	SENS. (MBH)	EAT (°FDB/°FWB)	DESIGN (MBH)	SUPP. HTG (KW)	EAT (°FDB)	COOLING DEG F	HEATING DEG F	VOLTS/PH	MCA	MOCP	FLA		EER		
HP-3036-2	1,650	0	57.5	47.0	80	54.0	0	55	80	58	480/3	16	20	15.6	3.2	10.7	R-410A	1, 2, 3, 4, 5, 6, 7
HP-3036-3	1,650	0	57.5	47.0	80	54.0	0	65	77	55	480/3	16	20	15.6	3.2	10.7	R-410A	1, 2, 3, 4, 5, 6, 7
HP-1120-2	1,650	0	57.5	47.0	80	54.0	0	55	80	58	480/3	16	20	15.6	3.2	10.7	R-410A	1, 2, 3, 4, 5, 6, 7
HP-1120-3	1,650	0	57.5	47.0	80	54.0	0	65	77	55	480/3	16	20	15.6	3.2	10.7	R-410A	1, 2, 3, 4, 5, 6, 7

NOTES:
1. MINIMUM SEER/HSPF SHALL BE NO LESS THAN THE RECOMMENDED EFFICIENCY LISTED BY ENERGY STAR AND FEDERAL ENERGY MANAGEMENT PROGRAM (FEMP) FOR THE EQUIPEMENT LISTED. SEE WWW.EREN.DOE.GOV/FEMP/PROCUREMENT FOR REQUIREMENTS.
2. PROVIDE THERMOSTAT WITH LOCKABLE ENCLOSURE.
3. SYSTEM SHALL BE CONTROLLED BY INTEGRAL AUTOMATIC CONTROLS VIA WALL-MOUNTED WIRED CONTROLLER.
4. PROVIDE MANUFACTURER'S REQUIRED EQUIPMENT CLEARANCES FOR UNITS.
5. PROVIDE OUTDOOR UNIT WITH MANUFACTURER WALL-MOUNTING BRACKET.
6. INSTALL OUTDOOR UNIT ON 3-FOOT TALL CONCRETE PEDESTAL (PROVIDED BY STRUCTURAL). SEE DETAIL ON DRAWING S-502 FOR ADDITIONAL INFORMATION.
7. PROVIDE UNIT WITH VARIABLE SPEED BLOWER MOTOR AND STAINLESS STEEL CABINET.

EXHAUST FAN SCHEDULE

MARK	AIRFLOW CFM	ESP (IN W.G.)	MOTOR DATA			NEMA STARTER	DRIVE TYPE	CONFIGURATION	DAMPER		LOCATION	REMARKS
			HP	RPM	VOLT/PH				TYPE	SIZE		
EF-3036-1	150	0.3	1/6	1725	120/1	4X	DIRECT	IN-LINE	EOD	12"x12"	VAULT E-3036	1
EF-101-1	150	0.3	1/6	1725	120/1	4X	DIRECT	IN-LINE	EOD	12"x12"	VAULT E-101	1
EF-1120-1	150	0.3	1/6	1725	120/1	4X	DIRECT	IN-LINE	EOD	12"x12"	VAULT E-1120	1

NOTES:
1. PROVIDE WALL-MOUNTED TIMER SWITCH FOR FAN CONTROL.

SEQUENCES OF OPERATION

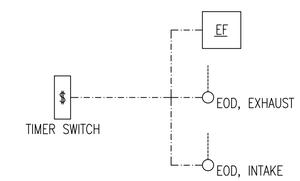

1. EXHAUST FANS

EXHAUST FANS SHALL PROVIDE NORMAL VENTILATION WHEN THE SPACE IS OCCUPIED AND SHALL ENERGIZE AND DE-ENERGIZE VIA A WALL-MOUNTED TIMER SWITCH. FANS SHALL PROVIDE VENTILATION AT A FIXED, NON-ADJUSTABLE SETTING. TIMER DURATION SHALL BE USER ADJUSTABLE.

INTAKE AND EXHAUST ELECTRIC OPERATED DAMPERS SHALL BE INTERLOCKED WITH THE ASSOCIATED EXHAUST FAN. DAMPERS SHALL OPEN WHEN THE ASSOCIATED EXHAUST FAN IS ENABLED. DAMPERS SHALL CLOSE WHEN THE ASSOCIATED EXHAUST FAN IS DISABLED. THE INTAKE AND EXHAUST DAMPERS SHALL BE PROVED OPEN THROUGH END SWITCHES PRIOR TO FAN STARTING.

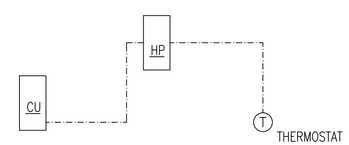

2. SPLIT SYSTEM HEAT PUMPS

EACH UNIT SHALL BE PROVIDED WITH A DEDICATED WALL-MOUNTED WIRED CONTROLLER. CONTROLS SHALL BE SET TO AUTOMATIC MODE. UNITS SHALL PROVIDE COOLING OR HEATING TO MAINTAIN AN ADJUSTABLE SPACE TEMPERATURE SETPOINT, AS DETERMINED BY THE UNIT'S CONTROLLER/THERMOSTAT.

REFER TO EQUIPMENT SCHEDULE FOR TEMPERATURE SETPOINTS. SETPOINT OFFSETS ARE INTENDED TO PROVIDE BASIC LEAD-LAG CONTROL.

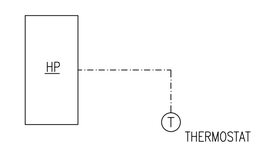

3. PACKAGED HEAT PUMPS

EACH UNIT SHALL BE PROVIDED WITH A DEDICATED WALL-MOUNTED THERMOSTAT. CONTROLS SHALL BE SET TO AUTOMATIC MODE. UNITS SHALL PROVIDE COOLING OR HEATING TO MAINTAIN AN ADJUSTABLE SPACE TEMPERATURE SETPOINT, AS DETERMINED BY THE UNIT'S CONTROLLER/THERMOSTAT.

REFER TO EQUIPMENT SCHEDULE FOR TEMPERATURE SETPOINTS. SETPOINT OFFSETS ARE INTENDED TO PROVIDE BASIC LEAD-LAG CONTROL.

SYM	DESCRIPTION	DATE	APPR

NAVFAC

Matthew Grice
COMMONWEALTH OF VIRGINIA
MATTHEW J. GRICE
Lic. No. 046036
PROFESSIONAL ENGINEER
SEAL

A/E INFO

APPROVED

FOR COMMANDER NAVFAC

ACTIVITY

SATISFACTORY TO DATE

DES KC DRW KC CHK MJG

PM/DM

BRANCH MANAGER

CHIEF ENG/ARCH

DEPARTMENT OF THE NAVY
NAVAL FACILITIES ENGINEERING COMMAND
HR IPT
NAVAL FACILITIES ENGINEERING COMMAND ~ MID-ATLANTIC
NAVAL AIR STATION OCEANA ~ VIRGINIA BEACH, VIRGINIA
NAVAL AIR STATION OCEANA
VIRGINIA BEACH, VIRGINIA
ENERGY AND RELIABILITY
MODERNIZATION OF AIRFIELD LIGHTING - PHASE 1 AND 2
MECHANICAL SCHEDULES AND CONTROLS

SCALE: NONE
EPROJECT NO.: 1291651
CONSTR. CONTR. NO.
NAVFAC DRAWING NO. 12691648
SHEET 115 OF 368
M-601
DRAWFORM REVISION: 10 MARCH 2009

FILE NAME: H:\56427 NAS Oceana\Mechanical\Planset\Task 008\10-0863-008-M-601.dwg LAYOUT NAME: M-601 PLOTTED: Tuesday, March 24, 2015 - 10:18am USER: kjerrigan