GENERAL:

THE STRUCTURE IS DESIGNED TO BE SELF-SUPPORTING AND STABLE AFTER THE BUILDING IS FULLY COMPLETED. IT IS SOLELY THE CONTRACTOR'S RESPONSIBILITY TO DETERMINE ERECTION PROCEDURES AND SEQUENCE, AND TO ENSURE THE STABILITY OF THE BUILDING AND ITS COMPONENT PARTS, AND THE ADEQUACY OF TEMPORARY OR INCOMPLETE CONNECTIONS, DURING ERECTION. THIS INCLUDES THE ADDITION OF ANY SHORING, SHEETING, TEMPORARY GUYS, BRACING OR TIE DOWNS THAT MIGHT BE NECESSARY. SUCH MATERIAL IS NOT SHOWN ON THE DRAWINGS. IF APPLIED, THEY SHALL BE REMOVED AS CONDITIONS PERMIT AND SHALL REMAIN THE CONTRACTOR'S PROPERTY. THE ENGINEER HAS NO EXPERTISE IN, AND TAKES NO RESPONSIBILITY FOR, CONSTRUCTION MEANS AND METHODS OR JOB SITE SAFETY DURING CONSTRUCTION. PROCESSING AND/OR APPROVING SUBMITTALS MADE BY THE CONTRACTOR WHICH MAY CONTAIN INFORMATION RELATED TO CONSTRUCTION METHODS OR SAFETY ISSUES, OR PARTICIPATION IN MEETINGS WHERE SUCH ISSUES MIGHT BE DISCUSSED, SHALL NOT BE CONSTRUED AS VOLUNTARY ASSUMPTION BY THE ENGINEER OR ANY RESPONSIBILITY FOR SAFETY PROCEDURES. IT IS SOLELY THE RESPONSIBILITY OF EACH CONTRACTOR TO FOLLOW ALL APPLICABLE SAFETY CODES AND REGULATIONS DURING ALL PHASE OF CONSTRUCTION. THE ENGINEER IS NOT ENGAGED IN, AND DOES NOT SUPERVISE CONSTRUCTION.

UTILITIES:

1. CONTRACTOR IS TO VERIFY LOCATIONS OF ALL UNDERGROUND UTILITIES PRIOR TO PERFORMING ANY SUBSURFACE OR EXCAVATION WORK.

2. PROTECTION: PROTECT EXISTING UTILITIES TO REMAIN DURING EXCAVATION, AND CUTTING AND PATCHING, TO PREVENT DAMAGE.

3. TAKE ALL PRECAUTIONS NECESSARY TO AVOID CUTTING EXISTING PIPE, CONDUIT OR DUCTWORK SERVING THE BUILDING, UNTIL PROVISIONS HAVE BEEN MADE TO BYPASS THEM. PROVIDE TEMPORARY SERVICES DURING INTERRUPTIONS TO EXISTING UTILITIES, AS ACCEPTABLE TO OWNER.

4. DAMAGES: PROMPTLY REPAIR DAMAGES CAUSED TO ADJACENT FACILITIES BY DEMOLITION WORK AT NO COST TO OWNER.

5. DISPOSAL OF DEMOLISHED MATERIALS: REMOVE DEBRIS, RUBBISH AND OTHER MATERIALS RESULTING FROM EXCAVATION/DEMOLITION OPERATIONS FROM BUILDING SITE. TRANSPORT AND LEGALLY DISPOSE OF MATERIALS OFF SITE.

6. IF UNANTICIPATED MECHANICAL, ELECTRICAL OR STRUCTURAL ELEMENTS WHICH CONFLICT WITH THE INTENDED FUNCTION OR DESIGN ARE ENCOUNTERED, INVESTIGATE AND MEASURE BOTH NATURE AND EXTENT OF THE CONFLICT. SUBMIT REPORT TO OWNER'S REPRESENTATIVE IN WRITTEN, ACCURATE DETAIL. PENDING RECEIPT OF DIRECTIVE FROM OWNERS' REPRESENTATIVE, REARRANGE SCHEDULE AS NECESSARY TO CONTINUE OVERALL JOB PROGRESS WITHOUT DELAY.

DEMOLITION:

1. PROTECTION: PROTECT EXISTING CONSTRUCTION TO REMAIN DURING REMOVAL, CUTTING AND PATCHING TO PREVENT DAMAGE.

2. CUTTING: CUT EXISTING CONSTRUCTION USING METHODS LEAST LIKELY TO DAMAGE ELEMENTS TO BE RETAINED OR ADJOINING CONSTRUCTION. IN GENERAL, WHERE CUTTING IS REQUIRED, USE HAND OR SMALL POWER TOOLS DESIGNED FOR SAWING OR GRINDING, NOT HAMMERING AND CHOPPING. CUT HOLES AND SLOTS NEATLY TO SIZE REQUIRED WITH MINIMUM DISTURBANCE OF ADJACENT SURFACES. TEMPORARILY COVER OPENINGS WHEN NOT IN USE CUT THROUGH CONCRETE AND MASONRY USING A CUTTING MACHINE SUCH AS CARBORUNDUM SAW OR DIAMOND CORE DRILL.

3. CUT-OFF PIPE OR CONDUIT IN WALLS OR PARTITIONS TO BE REMOVED, RELOCATED OR ABANDONED. CUT-OFF PIPE OR CONDUIT IN WALLS OR PARTITIONS TO BE REMOVED. CAP VALUE OR PLUG AND SEAL THE REMAINING PORTION OF PIPE OR CONDUIT TO PREVENT ENTRANCE OF MOISTURE OR OTHER FOREIGN MATTER AFTER BY-PASSING AND CUTTING. IT IS THE RESPONSIBILITY OF THE CONTRACTOR TO LOCATE ALL UTILITIES THAT ARE INVOLVED IN THE DEMOLITION ACTIVITIES AND COORDINATE THEIR REMOVAL OR RELOCATION WITH THE OWNERS REPRESENTATIVE. WORK AT NO COST TO OWNER.

4. DAMAGES: PROMPTLY REPAIR DAMAGES CAUSED TO ADJACENT FACILITIES BY DEMOLITION WORK AT NO COST TO OWNER.

5. DISPOSAL OF DEMOLISHED MATERIALS: REMOVE DEBRIS, RUBBISH AND OTHER MATERIALS RESULTING FROM DEMOLITION OPERATIONS FROM BUILDING SITE. TRANSPORT AND LEGALLY DISPOSE OF MATERIALS OFF SITE.

FOUNDATION - BUILDING E-3015:

1. CONCRETE SHALL NOT BE POURED ON FROZEN GROUND.

2. PROVIDE SHEETING AS REQUIRED TO SUPPORT LATERAL LOADS DURING EXCAVATION. SEE GEOTECHNICAL REPORT FOR SOIL PROPERTIES.

3. FILL ALL VOIDS AND REPLACE DISTURBED SOIL WITH LEAN CONCRETE.

4. CONTRACTOR SHALL SAFEGUARD AND PROTECT ALL EXCAVATIONS AND ALL EXCAVATIONS SHALL BE KEPT FREE OF WATER.

5. CONTRACTOR SHALL REFER TO CIVIL DRAWINGS FOR ALL LOCATIONS OF TRENCHES, PITS, CONDUITS, ETC. NOT SHOWN ON STRUCTURAL DRAWINGS.

FOUNDATION - BUILDING E-145:

1. SLAB-ON-GRADE SHALL BE 6" THICK CONCRETE REINFORCED WITH ONE LAYER OF #4@12" C/C EACH WAY 2" FROM TOP SURFACE ON 6" THICK #57 STONE FILL OVER 10 MIL POLYETHYLENE VAPOR BARRIER.

2. ALL WALLS SHOWN ON PLAN ARE FULL HEIGHT UNLESS NOTED OTHERWISE. AND EXTEND TO JOIST BEARING ELEVATION OR UNDERSIDE OR ROOF DECK, AS APPROPRIATE.

3. EXTERIOR EQUIPMENT SLABS SHALL BE SIZED TO ACCOMMODATE THE EQUIPMENT FOOTPRINT WITH APPROXIMATELY 1 FT. CLEARANCE ON EACH SIDE. FOR SLAB DETAILS, SEE EQUIPMENT SLAB TYPICAL SECTION SHT. S-502.

4. THE SOIL BENEATH THE NEW SLAB ON GRADE SHALL BE PREPARED IN ACCORDANCE WITH THE GEOTECHNICAL REPORT TITLED, "REPORT OF SUBSURFACE EXPLORATION AND GEOTECHNICAL ENGINEERING SERVICES, ENERGY AND RELIABILITY MODERNIZATION OF AIRFIELD LIGHTING, NAVAL AIR STATION (NAS) OCEANA, VIRGINIA BEACH, VIRGINIA", NOVEMBER, 2014.

FOUNDATIONS:

A SOIL BEARING CAPACITY IS ASSUMED AS 2,000 PSF IN THE DESIGN, AND MUST BE FIELD VERIFIED BY A REGISTERED GEOTECHNICAL ENGINEER. IF THE INDICATED BEARING CAPACITY IS NOT ENCOUNTERED AT THE ELEVATIONS INDICATED ON THE CONTRACT DRAWINGS, THE FOUNDATIONS SHALL BE LOWERED OR INCREASED IN SIZE AS DIRECTED BY THE STRUCTURAL ENGINEER. ELEVATIONS SHOWN ON PLAN ARE TO THE BOTTOM OF THE FOUNDATIONS.

SHOP DRAWINGS:

SHOP DRAWINGS FOR ALL STRUCTURAL ELEMENTS SHOWN ON THE CONTRACT DOCUMENTS MUST BE SUBMITTED BY GENERAL CONTRACTOR AND REVIEWED BY THE ENGINEER. ALL CONTRACTOR MODIFICATIONS (INCLUDING PRODUCTS SUBMISSION) MUST BE IDENTIFIED IN WRITING AS A PROPOSED "AS EQUAL" CHANGES AT TIME OF SUBMISSION. IF A CONTRACTOR OR OWNER FAILS TO SUBMIT THE SHOP DRAWINGS OR FAILS TO FOLLOW THE ABOVE "AS EQUAL" PROCEDURE, THE ENGINEER OF RECORD WILL NOT BE RESPONSIBLE FOR THE STRUCTURAL CERTIFICATION AND DESIGN OF THE PROJECT. SHOP DRAWINGS ARE REVIEWED BY THE ENGINEER AS A CONVENIENCE TO THE CONTRACTOR AND ARE NOT A CONTRACT DOCUMENT.

INSPECTION:

ALL WORK SPECIFIED HEREIN SHALL BE INSPECTED IN ACCORDANCE WITH THE BUILDING CODE AND ALL LOCAL ORDINANCES. THE OWNER OR CONTRACTOR SHALL HIRE AN EXPERIENCED QUALIFIED INSPECTOR TO PERFORM ALL REQUIRED INSPECTION WORK. INSPECTION SHALL CONSIST OF, BUT NOT BE LIMITED TO, VISUAL OBSERVATIONS OF MATERIALS, EQUIPMENT OR CONSTRUCTION WORK FOR THE PURPOSE OF ASCERTAINING THAT THE WORK IS IN SUBSTANTIAL CONFORMANCE WITH THE CONTRACT DOCUMENTS AND WITH THE DESIGN INTENT. THE ENGINEER WILL NOT PERFORM THE REQUIRED INSPECTION AS PART OF THIS PRESENT CONTRACT WITH THE ARCHITECT/OWNER. UNDER THIS PRESENT CONTRACT, THE ENGINEER MAY VISIT THE SITE TO ASCERTAIN GENERAL CONFORMANCE TO THE CONTRACT DOCUMENTS. HOWEVER, SUCH VISITS SHALL NOT BE RELIED UPON BY OTHERS AS ACCEPTANCE OF THE WORK, NOR SHOULD IT BE CONSTRUED TO RELIEVE THE CONTRACTOR IN ANY WAY FROM HIS OBLIGATIONS AND RESPONSIBILITIES UNDER THE CONSTRUCTION CONTRACT. HOWEVER, IF DESIRED, THE ENGINEER OF RECORD MAY BE HIRED UNDER A SEPARATE CONTRACT TO PERFORM THIS INSPECTION WORK.

REINFORCING STEEL:

REINFORCING STEEL SHALL BE DEFORMED BARS IN ACCORDANCE WITH ASTM A-615, GRADE 60. BENDS ARE TO BE FABRICATED AS PER DETAILS.

PLACE MAIN REINFORCING STEEL SO AS TO PROVIDE MINIMUM COVER AS SHOWN BELOW. ALL WALL STEEL SHALL HAVE A MINIMUM EXTENSION INTO THE SUPPORTS IN ACCORDANCE WITH THE LATEST ADDITION OF THE ACI CODE, PROVIDE ACCESSORIES AND BAR SUPPORTS IN ACCORDANCE WITH THE MANUAL OF STANDARD PRACTICE FOR DETAILING REINFORCED CONCRETE STRUCTURES (ACI 315).

REINFORCING SHALL HAVE THE FOLLOWING COVER UNLESS OTHERWISE NOTED:

A. FOOTING AND OTHER CONCRETE POURED AGAINST EARTH: 3"
B. INTERIOR AND EXTERIOR FACES OF WALLS, SLABS: 2"

STRUCTURAL STEEL:

1. STRUCTURAL STEEL PLATES, ANGLES, CHANNELS, AND BARS SHALL CONFORM TO ASTM A-36.

2. FABRICATE AND ERECT STEEL IN ACCORDANCE WITH THE LATEST EDITION OF THE AISC MANUAL OF STEEL CONSTRUCTION.

3. SUBMIT COMPLETE ERECTION AND DETAILED SHOP DRAWINGS OF ALL STRUCTURAL STEEL TO THE ENGINEER FOR REVIEW MARK ALL ITEMS OF STRUCTURAL STEEL, SHOWING SIZES, LENGTHS, LOCATION, AND ASTM DESIGNATIONS.

4. ALL STEEL SHALL BE HOT-DIP GALVANIZED. GALVANIZING SHALL CONFORM TO ASTM A123 AND A153.

5. ALL GROUT UNDER STEEL PLATES SHALL BE NON-SHRINK, NON-METALIC "PRE-MIX" TYPE AND HAVE A MINIMUM COMPRESSIVE STRENGTH OF 5,000 PSI.

REINFORCED MASONRY:

1. CONCRETE MASONRY UNITS SHALL BE 2-CELL BLOCK WITH A PRISM STRENGTH f'c = 2,000 PSI AT 28 DAYS.

2. VOIDS CONTAINING REINFORCEMENT IN THE MASONRY SHALL BE FILLED SOLID WITH GROUT. GROUT SHALL CONFIRM TO ASTM C 476. THE COMPRESSIVE STRENGTH OF THE GROUT SHALL BE 3,000 PSI.

3. ALL MORTAR SHALL BE TYPE M OR S HIGH-STRENGTH MORTAR (MINIMUM 1,800 PSI). CONFORM TO ASTM C-270.

4. BACKFILLING AGAINST MASONRY WALLS SHALL NOT BE DONE UNTIL MASONRY HAS ATTAINED SUFFICIENT STRENGTH. EARTH FILL SHALL BE PLACED SIMULTANEOUSLY ON OPPOSITE SIDES OF WALLS WHEN POSSIBLE.

5. 1 1/2-INCH DIAMETER INSPECTION HOLES SPACED 4'-0" ON CENTER HORIZONTALLY SHALL BE DRILLED AT THE BOTTOM INSIDE OF ALL BLOCK TO INSURE THAT GROUT HAS BEEN PLACED THROUGHOUT ALL MASONRY VOIDS.

6. CONCRETE MASONRY UNITS (CMU) SHALL HAVE A MINIMUM 28 DAY COMPRESSIVE STRENGTH OF 1500 PSI AND SHALL CONFORM TO ASTM C90.

7. GROUT SOLID CMU CELLS CONTAINING REINFORCEMENT OR ANCHORS. ALL VERTICAL REINFORCING SHALL BE CENTERED AND CONTINUOUS FOR THE FULL HEIGHT OF THE WALL.

8. ALL CMU SHALL BE LAID IN RUNNING BOND PATTERN.

9. PROVIDE GALVANIZED TRUSS TYPE HORIZONTAL JOINT REINFORCING AT EVERY OTHER COURSE IN ALL MASONRY WALLS.

10. VAULT E-145: PROVIDE CONTINUOUS BOND BEAMS AT THE TOP OF WALLS AND SPACED VERTICALLY NOT MORE THAN 72 IN FOR THE ENTIRE HEIGHT OF WALL. BOND BEAMS SHALL BE 8" DEEP WITH 2 #5 BARS UNLESS OTHERWISE NOTED.

11. CONTINUOUS REINFORCING STEEL SHALL BE LAPPED IN ACCORDANCE WITH ACI-318-11 REQUIREMENTS UNLESS OTHERWISE NOTED. HORIZONTAL MASONRY REINFORCING SHALL BE CONTINUOUS AROUND ALL CORNERS AND AT INTERSECTING WALLS. SEE TYPICAL DETAIL.

12. ANCHOR BOLTS SHALL BE SIZE AND EMBEDMENT INDICATED.

13. VAULT E-145: THE BOND BEAMS INDICATED ON PLAN SHALL BE A 8 IN. DEEP BOND BEAM REINFORCED WITH WITH 2 #5 AT BOTTOM.

DESIGN CODES AND SPECIFICATIONS:

1. 2009 VIRGINIA CONSTRUCTION CODE
2. 2012 INTERNATIONAL BUILDING CODE (IBC)
3. AMERICAN CONCRETE INSTITUTE 318 – 11 (ACI)
4. AMERICAN INSTITUTE OF STEEL CONSTRUCTION MANUAL (AISC)13TH EDITION
5. AMERICAN SOCIETY OF CIVIL ENGINEERING (ASCE/SEI 7-10) MINIMUM DESIGN LOADS FOR BUILDINGS AND OTHER STRUCTURES
6. UFC-301-01 STRUCTURAL ENGINEERING

DESIGN DATA:

f'c = 4,000 PSI
fy = 60,000 PSI (CONCRETE REINFORCING)
Fy = 36,000 PSI/50,000 PSI (STEEL)

LIVE LOADS VAULT E-145

1. FLOOR = 350 PSF & 10K AXLE
2. ROOF = 30 PSF
3. WIND = 120 MPH

CONCRETE:

1. ALL CONCRETE WORK SHALL CONFORM TO ALL THE PROVISIONS OF THE "SPECIFICATIONS FOR STRUCTURAL CONCRETE FOR BUILDINGS" (ACI 301) AND TO THE "BUILDING CODE REQUIREMENTS FOR REINFORCED CONCRETE" (ACI 318-11). ALL STRUCTURAL CONCRETE SHALL HAVE A MINIMUM 28 DAY COMPRESSIVE STRENGTH OF 4,000 PSI UNLESS NOTED OTHERWISE. ADDITIONALLY, THE CONCRETE SHALL CONFORM TO ALL THE PROVISIONS OF "RECOMMENDED PRACTICE FOR HOT WEATHER CONCRETING" (ACI 305-R82) AND "RECOMMENDED PRACTICE FOR COLD WEATHER CONCRETING" (ACI 306-R83).

2. ALL WATERSTOPS TO BE INSTALLED IN ACCORDANCE WITH MANUFACTURERS WRITTEN INSTRUCTIONS. WATERSTOPS ARE TO BE ADEQUATELY SECURED WITH TIE WIRE LOOPED THRU FIELD APPLIED HOG RINGS TO PREVENT ANY DISPLACEMENT OR FOLDING OVER OF WATERSTOP DURING CONCRETE PLACEMENT. NAILS, SCREWS, SPIKES, WIRES ETC. ARE NOT PERMITTED TO BE PLACED THRU ANY PORTION OF THE WATERSTOP.

3. ALL FORMWORK SHALL BE IN ACCORDANCE WITH THE AMERICAN CONCRETE INSTITUTE "FORMWORK FOR CONCRETE" SPECIAL PUBLICATION NO. 4 AND ACI'S "STANDARD RECOMMENDED PRACTICE FOR CONCRETE FORMWORK" (ACI-347-LATEST EDITION).

4. ALL CONCRETE EXPOSED TO THE WEATHER SHALL HAVE AN AIR ENTRAINMENT OF 6% ± 1%. NO ADMIXTURES CONTAINING CALCIUM CHLORIDE SHALL BE PERMITTED.

5. THE MAXIMUM SLUMP OF ALL CONCRETE SHALL BE 4".

6. FLOOR SLABS SHALL BE FINISHED TO A MINIMUM FLATNESS F- NUMBER Ff = 20 AND A MINIMUM LEVELNESS F-NUMBER F1 = 17 IN ANY DIRECTION.

7. ALL CONCRETE SHALL BE CURED WITH LIQUID SEALING COMPOUND CONFORMING TO ASTM C-309, TYPE I AND FEDERAL SPECIFICATION TT-C-00800 OR OTHER APPROVED METHOD WHICH IS COMPATIBLE WITH FLOORING ADHESIVES AND OTHER SURFACE TREATMENTS.

8. ALL CONCRETE LEFT EXPOSED AT THE COMPLETION OF THE PROJECT SHALL BE TREATED WITH A CLEAR, PENETRATING ACRYLIC BASE POLYMER CAPABLE OF PREVENTING INFILTRATION OF WATER BORNE CHLORIDES SUCH AS CONSPEC #1 BY CONSPEC MARKETING & MANUFACTURING COMPANY OR APPROVED EQUAL. LOADS GREATER THAN THE DESIGN LIVE LOADS SHALL NOT BE PLACED ON THE STRUCTURE. A CONCRETE STRUCTURE MAY NOT SUPPORT ITS DESIGN LIVE LOAD FOR 28 DAYS. CONTRACTOR SHALL SUPPORT ADJACENT STRUCTURES, UTILITIES, AND EXCAVATIONS AS REQUIRED FOR COMPLETION OF WORK. ONE SET OF COMPRESSIVE TEST CYLINDERS FOR EACH 100 CUBIC YARDS POURED, BUT NOT LESS THAN ONE SET FOR EACH DAY'S POUR AND EACH CLASS OF CONCRETE, ALONG WITH SLUMP TESTS SHALL BE PERFORMED BY A TESTING LABORATORY APPROVED BY THE STRUCTURAL ENGINEER.

MISCELLANEOUS:

1. CONTRACTOR SHALL VERIFY CONDITIONS IN THE FIELD AND NOTIFY ENGINEER IMMEDIATELY OF ANY CONDITIONS NOT AS ASSUMED; HE SHALL TAKE FIELD MEASUREMENTS AS REQUIRED AND BE RESPONSIBLE FOR SAME.

2. CONTRACTOR SHALL COORDINATE WITH ALL RELATED TRADES FOR DETAILING, FABRICATION, AND ERECTION PRIOR TO SUBMITTING SHOP DRAWINGS FOR APPROVAL.

3. ALL STRUCTURAL WORK SHALL BE COORDINATED WITH MECHANICAL, ELECTRICAL, PLUMBING, ETC. REQUIREMENTS. ANY DISCREPANCIES AND/OR INTERFERENCES SHALL BE REPORTED TO ENGINEER IMMEDIATELY.

4. NO OPENINGS SHALL BE MADE IN ANY STRUCTURAL MEMBER UNLESS SPECIFICALLY SHOWN ON STRUCTURAL DRAWINGS OR APPROVED BY ENGINEER.

5. SUPPORT DETAILS FOR MECHANICAL, ELECTRICAL AND PLUMBING ARE BASED ON AVAILABLE INFORMATION OF MANUFACTURER. CONTRACTOR SHALL COORDINATE REQUIREMENTS OF ACTUAL EQUIPMENT SUPPLIED WITH DETAILS AND SHALL PROVIDE ANY ADDITIONAL FRAMING.

6. CONSTRUCTION TOLERANCES AS SPECIFIED OR REFERENCED FOR DIFFERENT MATERIALS AND SYSTEMS SHALL NOT BE CUMULATIVE.

7. COORDINATE EXTENT OF CONSTRUCTION WITH PHASING PLANS.

8. FIRE SAFE ALL PENETRATIONS THROUGH WALLS, CEILINGS / ROOF, AND FLOOR WITH APPROVED MATERIALS IN ACCORDANCE WITH UL REQUIREMENTS.

9. ALL WELDS SHALL BE MADE WITH CLASS E-70XX SERIES ELECTRODES AND SHALL CONFORM TO THE REQUIREMENTS OF STRUCTURAL WELDING CODE OF AMERICAN WELDING SOCIETY AWS D1-1.

EARTHQUAKE LOAD ASCE 7-10

RISK CATEGORY = IV, IE = 1.50
1. Ss = 0.110g , S1 = 0.047g
2. SITE CLASS = E
3. SDS = 0.117, SDI = 0.075
4. SEISMIC DESIGN CATEGORY C
5. ORDINARY REINFORCED MASONRY SHEAR WALLS
6. Cs =0.08775
7. RESPONSE MODIFICATION FACTOR R = 2.0
8. EQUIVALENT LATERAL FORCE DESIGN METHOD

DEAD LOADS:

1. STRUCTURE = ACTUAL WEIGHT
2. CEILING/MECH. = 10 PSF (COLLATERAL LOAD) + ELECTRICAL AS INDICATED

SYM	DESCRIPTION	DATE	APPR

NAVFAC

Jeffrey Cerquetti

COMMONWEALTH OF VIRGINIA
JEFFREY CERQUETTI
Lic. No. 040468
PROFESSIONAL ENGINEER

JOHNSON, MIRMIRAN THOMPSON
Gannett Fleming
A Joint Venture
272 Bendix Road, Suite 260
Virginia Beach, Virginia, 23452
Telephone: (757)499-1895
WEB: WWW.JMT.COM
A/E INFO

APPROVED

FOR COMMANDER NAVFAC

ACTIVITY

SATISFACTORY TO DATE

DES JZ | DRW LW | CHK JC

PM/DM

BRANCH MANAGER Was

CHIEF ENG/ARCH

DEPARTMENT OF THE NAVY
NAVAL FACILITIES ENGINEERING COMMAND
NAVFAC MID-ATLANTIC
HR IPT
NORFOLK, VIRGINIA
NAVAL AIR STATION OCEANA
VIRIGINIA BEACH, VIRGINIA
SPECIAL PROJECT RM10-9004
REPAIR RUNWAY 14L-32R PAVEMENT AND LIGHTING
STRUCTURAL ABBREVIATIONS, LEGEND & GENERAL NOTES

SCALE: NOT TO SCALE
EPROJECT NO.: 1312624
CONSTR. CONTR. NO.
NAVFAC DRAWING NO. 12690177
SHEET 166 OF 315

S-001

DRAWFORM REVISION: 10 MARCH 2009

FILE NAME: Q:\SMD\100863_007_Repair_Runway_14L-32\CADD\Structures\S-001.dwg LAYOUT NAME: S-001 PLOTTED: Monday, March 23, 2015 – 1:56pm USER: fwallace

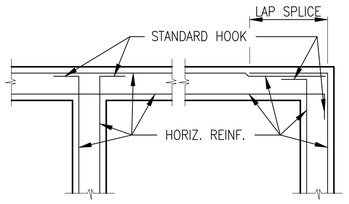

WALL CORNER REINFORCEMENT

SCALE: N.T.S.

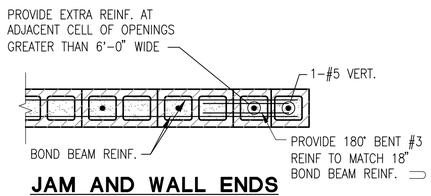

JAM AND WALL ENDS

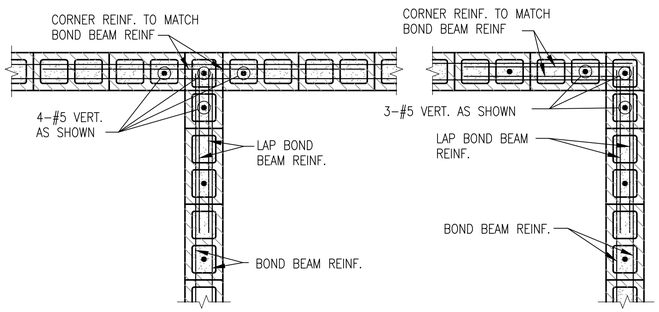

INTERSECTION **CORNERS**

NOTES:

1. GROUT ALL MASONRY CORES SOLID WHERE REINFORCING IS PLACED.
2. PROVIDE MINIMUM #5 @ 32" VERT. REINF. AT CENTER OF WALL.

TYPICAL MASONRY WALL VERTICAL REINFORCING DETAILS

SCALE: N.T.S.

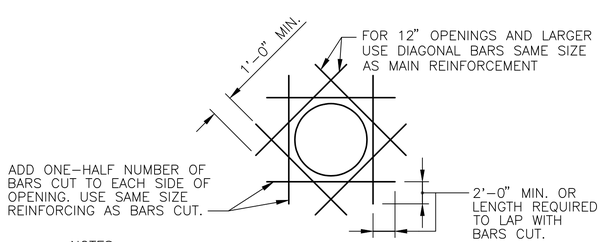

NOTES:

1. CIRCULAR OPENING SHOWN, RECTANGULAR OPENING SIMILAR.
2. EXTRA REINFORCING SHALL BE PROVIDED IN BOTH FACES UNLESS TYPICAL REINFORCING IS PLACED IN SINGLE LAYER ONLY.
3. WHEN DOWEL BARS ARE CUT PROVIDE DOWELS EACH SIDE OF OPENING IN ACCORDANCE WITH THIS DETAIL.

REINFORCING AT WALL AND SLAB OPENINGS

SCALE: N.T.S.

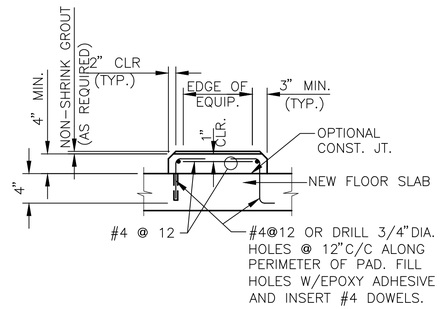

NOTE: DOWEL EMBEDMENT SHALL BE IN ACCORDANCE WITH EPOXY MANUFACTURER'S RECOMMENDATIONS.

CONCRETE PAD DETAIL

SCALE: N.T.S.

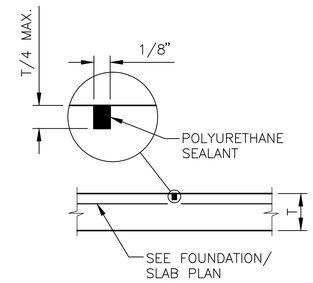

TYPICAL SAWCUT SLAB-ON-GRADE CONTROL JOINTS

SCALE: N.T.S.

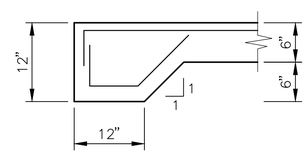

TYPICAL THICKENED SLAB

SCALE: N.T.S.

LEGEND

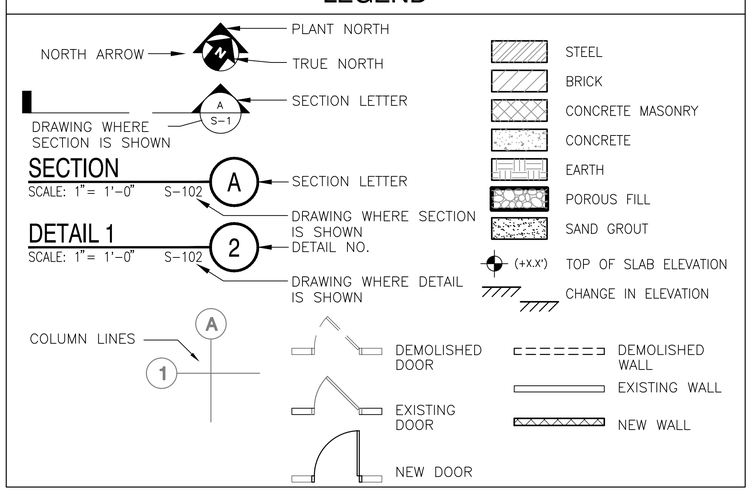

GENERAL SHEET NOTES

1. THE WORK SHOWN ON THIS DRAWING IS COMMON TO BOTH PHASE 1 AND PHASE 2.

SYM	DESCRIPTION	DATE	APPR

NAVFAC

Warren Barrett

COMMONWEALTH OF VIRGINIA
WARREN ARTHUR BARRETT II
Lic. No. 017260
PROFESSIONAL ENGINEER
SEAL

JOHNSON, MIRMIRAN THOMPSON
Gannett Fleming
A Joint Venture
272 Bendix Road, Suite 260
Virginia Beach, Virginia, 23452
Telephone: (757)499-1895
WEB: WWW.JMT.COM

A/E INFO

APPROVED

FOR COMMANDER NAVFAC

ACTIVITY

SATISFACTORY TO DATE

DES JZ DRW LW CHK JC

PM/DM

BRANCH MANAGER Was

CHIEF ENG/ARCH

DEPARTMENT OF THE NAVY
NAVAL FACILITIES ENGINEERING COMMAND
NAVFAC MID-ATLANTIC
NORFOLK, VIRGINIA
HR IPT
NAVAL AIR STATION OCEANA
VIRGINIA BEACH, VIRGINIA
SPECIAL PROJECT RM10-9004
REPAIR RUNWAY 14L-32R PAVEMENT AND LIGHTING
STRUCTURAL DETAILS

SCALE: NOT TO SCALE

EPROJECT NO.: 1312624

CONSTR. CONTR. NO.

NAVFAC DRAWING NO.
12690178

SHEET 167 OF 315

S-002

DRAWFORM REVISION: 10 MARCH 2009

FILE NAME: H:\56427 NAS Oceana\Structural\Phase1\10-0863-007-S-002.dwg LAYOUT NAME: S-002 PLOTTED: Monday, March 23, 2015 - 9:04am USER: kerrigan

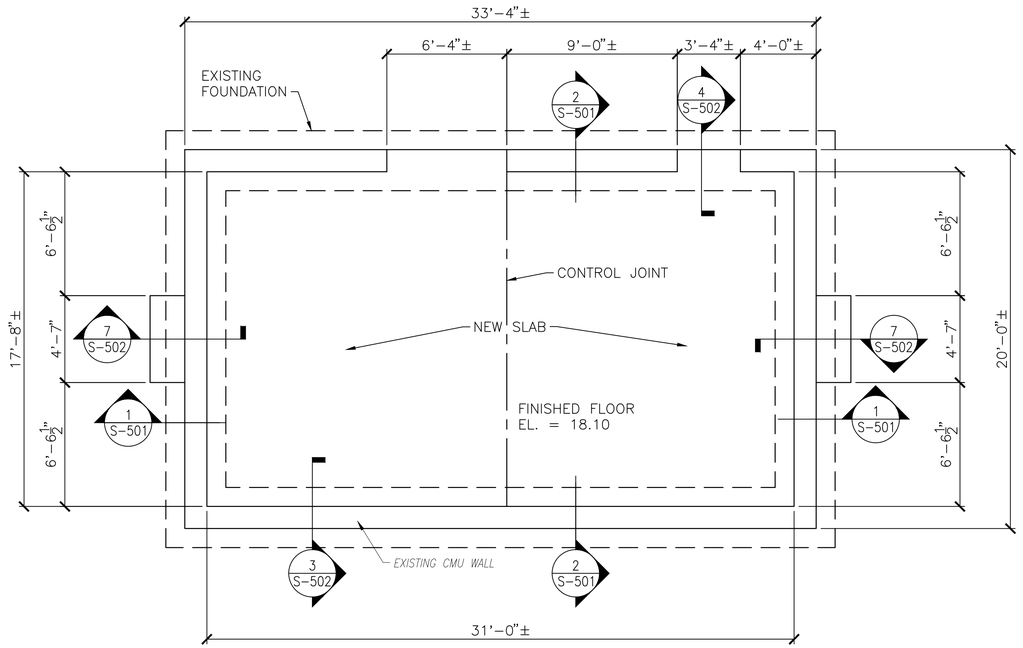

NOTES:

1. INTERIOR CMU WALL (NOT SHOWN) TO BE DEMOLISHED. SEE SHEET AD-401 FOR DETAILS.
2. CONTRACTOR TO COORDINATE EQUIPMENT PEDESTAL DIMENSIONS AND LOCATIONS WITH MECHANICAL. MAINTAIN 6" MIN. CLEARANCE FROM EDGE OF EQUIPMENT.

VAULT E-145 FLOOR PLAN

SCALE: 1/4" = 1'-0"

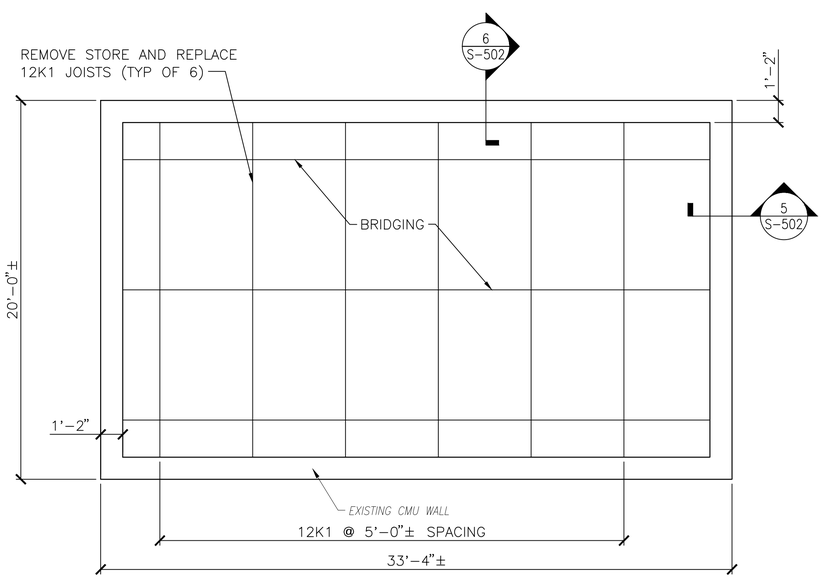

VAULT E-145 ROOF FRAMING PLAN

SCALE: 1/4" = 1'-0"

MASONRY LAP SPLICES

5 BARS 45 MIN. LENGTH (INCHES)

ROOF FRAMING NOTES

1. TOP OF SLAB-ON-GRADE SHALL BE USED AS THE REFERENCE ELEVATION = EL 18.10 ON STRUCTURAL SHEETS. SEE CIVIL SHEETS FOR FINISHED FLOOR ELEVATION.
2. STEEL JOIST SHALL BE PROVIDED WITH 2 ½" DEEP SEATS UNLESS OTHERWISE NOTED.
3. PROVIDE BRIDGING IN ACCORDANCE WITH SJI GUIDELINES. JOISTS AND BRIDGING SHALL BE DESIGNED FOR UPLIFT LOADS AS SHOWN IN THE DIAGRAM BELOW.
4. ROOF DECK SHALL BE 1 ½" TYPE B, 20 GAGE STEEL DECK. ATTACH THE DECK TO SUPPORTS WITH ⅝" ø PUDDLE WELDS IN THE 36/4 PATTERN. USE #10 TEK SCREWS AT 12" O.C. AT SIDE LAPS. DECK SHALL BE OF SUFFICIENT LENGTH TO PROVIDE A MINIMUM THREE SPAN CONDITION. THE DECK SHALL HAVE THE FOLLOWING MINIMUM MATERIAL PROPERTIES:

I	0.213 in^4 /ft.
Sp	0.235 in^3 /ft
Sn	0.247 in^3 /ft
Fy	33 ksi

GENERAL NOTES

1. EXISTING INTERIOR MASONRY SHALL BE REMOVED.
2. EXISTING BRIDGING SHALL BE REMOVED AND REPLACED IN SAME ORIENTATION.

KEY MAP

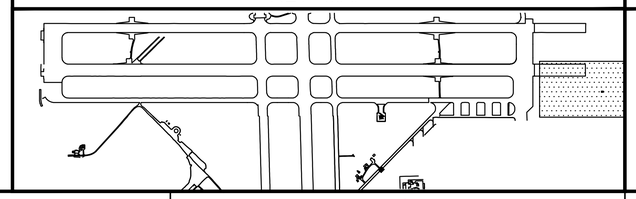

GRAPHIC SCALE

1/4"=1'-0"

1' 0 2' 4' 8'

SYM	DESCRIPTION	DATE	APPR

NAVFAC

Warren Barrett

COMMONWEALTH OF VIRGINIA
WARREN ARTHUR BARRETT II
Lic. No. 017260
PROFESSIONAL ENGINEER

JOHNSON, MIRMIRAN THOMPSON
Gannett Fleming
A Joint Venture
272 Bendix Road, Suite 260
Virginia Beach, Virginia, 23452
Telephone: (757)499-1895
WEB: WWW.JMT.COM

A/E INFO

APPROVED

FOR COMMANDER NAVFAC

ACTIVITY

SATISFACTORY TO DATE

DES DRE DRW DRE CHK JRS

PM/DM

BRANCH MANAGER WAS

CHIEF ENG/ARCH

DEPARTMENT OF THE NAVY
NAVAL FACILITIES ENGINEERING COMMAND
NAVFAC MID-ATLANTIC
NORFOLK, VIRGINIA
HR IPT
NAVAL AIR STATION OCEANA
VIRGINIA BEACH, VIRGINIA
SPECIAL PROJECT RM10-9004
REPAIR RUNWAY 14L-32R PAVEMENT AND LIGHTING
VAULT E-145-FLOOR PLAN & ROOF FRAMING PLAN

SCALE: 1/4" = 1'-0"
EPROJECT NO.: 1312624
CONSTR. CONTR. NO.
NAVFAC DRAWING NO. 12690179
SHEET 168 OF 315

S-401

DRAWFORM REVISION: 10 MARCH 2009

FILE NAME: H:\56427 NAS Oceana\Structural\Planset\10-0863-007-S-401.dwg LAYOUT NAME: ED-145 PLOTTED: Monday, March 23, 2015 - 9:05am USER: kjenrigon

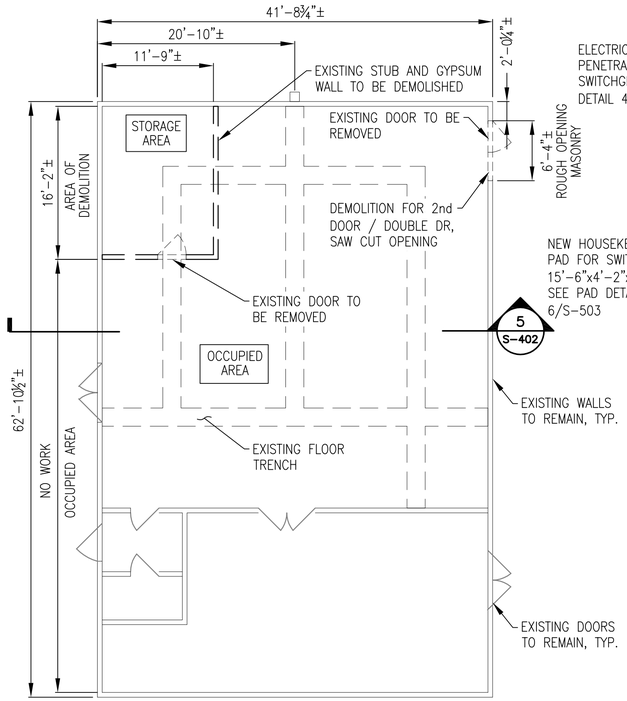

DEMOLITION PLAN (1)

SCALE: 1/8"= 1'-0" S-402

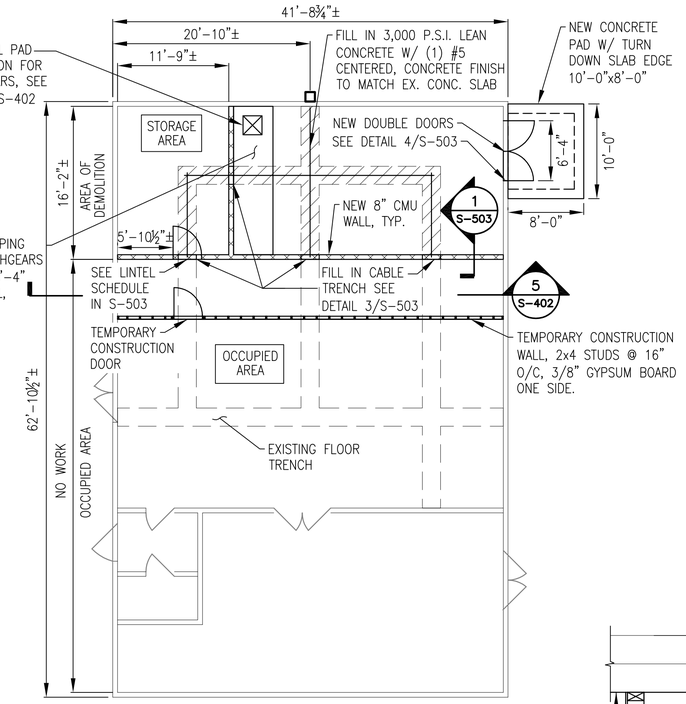

FLOOR PLAN (2)

SCALE: 1/8"= 1'-0" S-402

NOTES:
1. ALL DIMENSIONS ON DRAWING SHALL BE VERIFIED IN FIELD.
2. V.I.F. INDICATES, CONTRACTOR VERIFY IN FIELD.

SCHEDULES

DOOR TYPE

TYPE	MATERIAL	FUNCTION	REFERENCE	HEAD	JAMB
D1	STEEL, INTERIOR	SWINGING	08100	H1	J1
D2	STEEL, EXTERIOR	SWINGING	08100	H2	J2

HARDWARE TYPE

TYPE	MATERIAL	REFERENCE	TITLE
1	STORAGE ROOM	08710	SINGLE DOOR
2	SWITCHGEAR ROOM	08710	DOUBLE DOOR

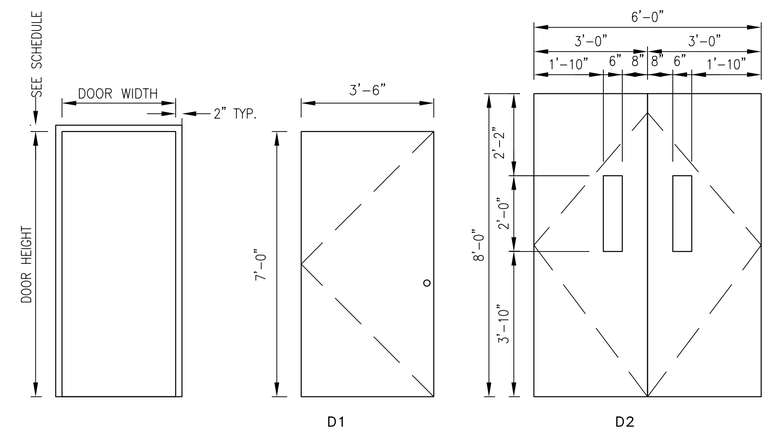

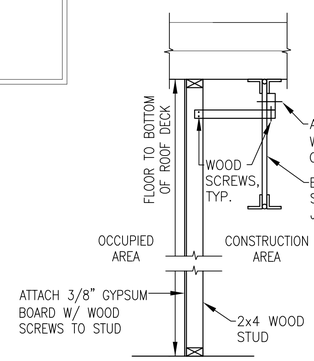

TEMPORARY STUD WALL DETAIL

SCALE :NOT TO SCALE

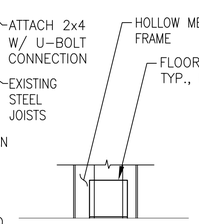

SILL DETAIL

SCALE: 1 1/2" = 1'-0"

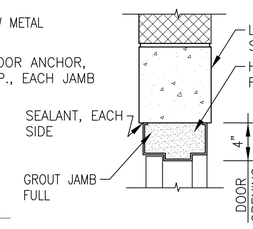

HEAD DETAIL 1

SCALE: 1 1/2" = 1'-0"

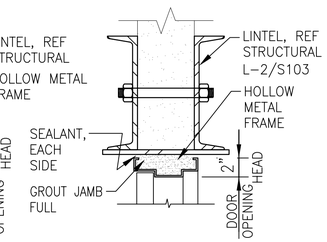

HEAD DETAIL 2

SCALE: 1 1/2" = 1'-0"

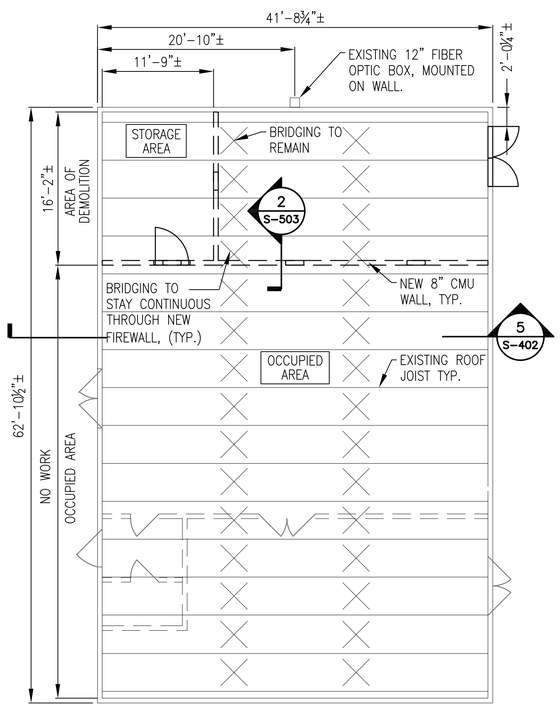

ROOF PLAN (3)

SCALE: 1/8"= 1'-0" S-402

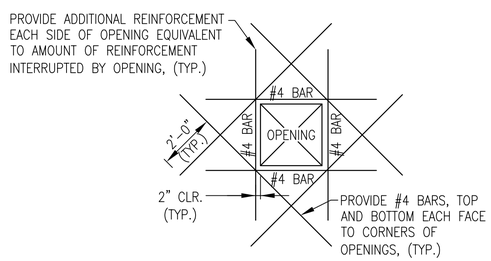

TYPICAL REINFORCEMENT AT SLAB PENETRATION OPENING (4)

SCALE: NOT TO SCALE S-402

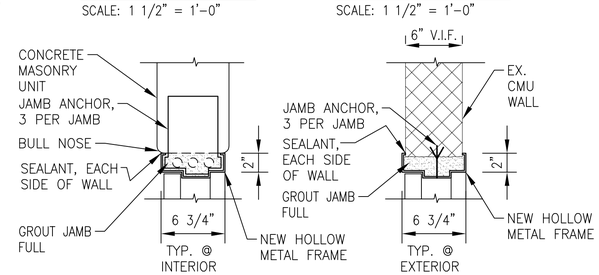

JAMB DETAIL 1

SCALE: 1 1/2" = 1'-0"

JAMB DETAIL 2

SCALE: 1 1/2" = 1'-0"

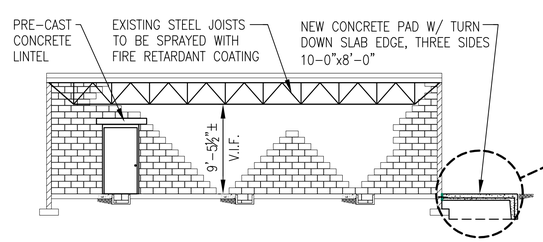

BUILDING SECTION (5)

SCALE: 1/8"= 1'-0" S-402

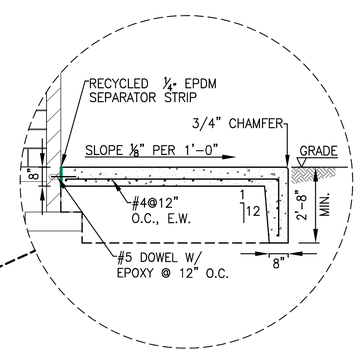

TURNDOWN CONCRETE DETAIL (6)

SCALE: 3/8"= 1'-0" S-402

GRAPHIC SCALE

SCALE: ⅛"= 1'-0"

SCALE: ½"= 1'-0"

SCALE: ⅜"= 1'-0"

SCALE: 1½"= 1'-0"

SYM	DESCRIPTION	DATE	APPR

NAVFAC

Jeffrey Cerquetti

COMMONWEALTH OF VIRGINIA
JEFFREY CERQUETTI
Lic. No. 040468
PROFESSIONAL ENGINEER

JOHNSON, MIRMIRAN THOMPSON
Gannett Fleming
A Joint Venture
272 Bendix Road, Suite 260
Virginia Beach, Virginia, 23452
Telephone: (757)499-1895
WEB: WWW.JMT.COM

A/E INFO

APPROVED

FOR COMMANDER NAVFAC

ACTIVITY

SATISFACTORY TO DATE

DES JZ DRW FW CHK JC

PM/DM

BRANCH MANAGER Was

CHIEF ENG/ARCH

DEPARTMENT OF THE NAVY
NAVAL FACILITIES ENGINEERING COMMAND
NAVFAC MID-ATLANTIC
NORFOLK, VIRGINIA
HR IPT
NAVAL AIR STATION OCEANA
VIRGINIA BEACH, VIRGINIA
SPECIAL PROJECT RM10-9004
REPAIR RUNWAY 14L-32R PAVEMENT AND LIGHTING
VAULT E-3015-STRUCTURAL & ARCHITECTURAL PLANS

SCALE: NOT TO SCALE
EPROJECT NO.: 1312624
CONSTR. CONTR. NO.
NAVFAC DRAWING NO. 12690180
SHEET 169 OF 315
S-402

DRAWFORM REVISION: 10 MARCH 2009

FILE NAME: Q:\SMD\100863_007_Repair_Runway_14L-32\CADD\Structures\S-402.dwg LAYOUT NAME: S-402 VAULT E-3015 - STRUCTURAL & ARCHITECTURAL PLANS PLOTTED: Monday, March 23, 2015 - 2:00pm USER: fwallace

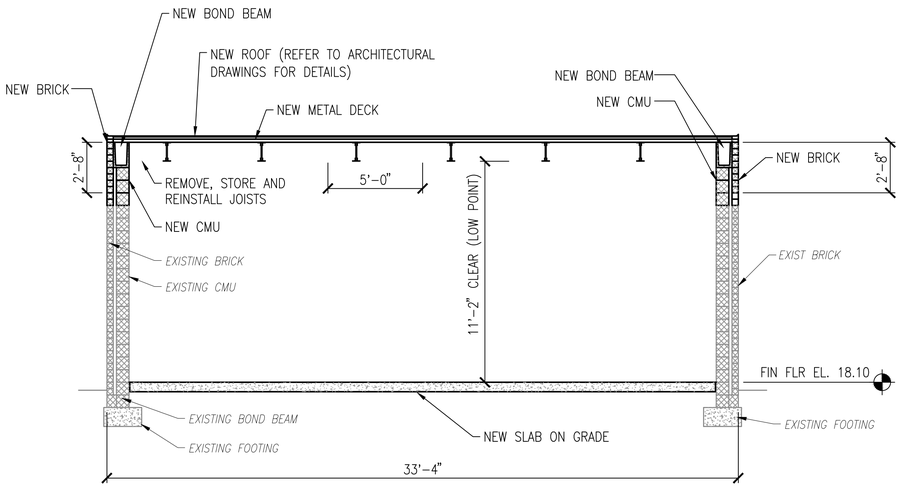

VAULT E-145 BUILDING SECTION (1)
SCALE: 1/4"=1'-0" S-401

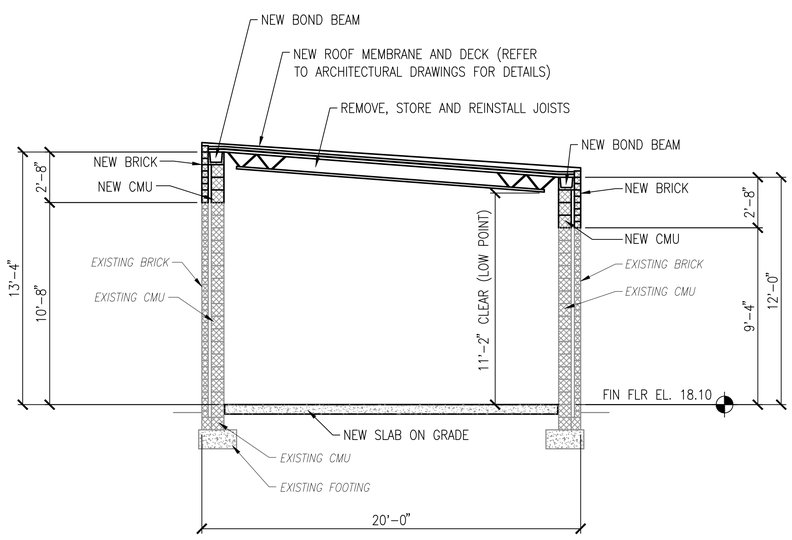

VAULT E-145 BUILDING SECTION (2)
SCALE: 1/4"=1'-0" S-401

GENERAL NOTE

EXISTING BRIDGING SHALL BE REMOVED AND REPLACED.
NOT SHOWN FOR CLARITY.

GRAPHIC SCALE

1/4"=1'-0"

1' 0 2' 4' 8'

SYM	DESCRIPTION	DATE	APPR

NAVFAC

Warren Barrett

COMMONWEALTH OF VIRGINIA
WARREN ARTHUR BARRETT II
Lic. No. 017260
PROFESSIONAL ENGINEER

JOHNSON, MIRMIRAN THOMPSON
Gannett Fleming
A Joint Venture
272 Bendix Road, Suite 260
Virginia Beach, Virginia, 23452
Telephone: (757)499-1895
WEB: WWW.JMT.COM

A/E INFO

APPROVED
FOR COMMANDER NAVFAC
ACTIVITY
SATISFACTORY TO DATE
DES DRE DRW DRE CHK JRS
PM/DM
BRANCH MANAGER WAS
CHIEF ENG/ARCH

DEPARTMENT OF THE NAVY
NAVAL FACILITIES ENGINEERING COMMAND
NAVFAC MID-ATLANTIC
NORFOLK, VIRGINIA
HR IPT
NAVAL AIR STATION OCEANA
VIRGINIA BEACH, VIRGINIA
SPECIAL PROJECT RM10-9004
REPAIR RUNWAY 14L-32R PAVEMENT AND LIGHTING
VAULT E145 – ELEVATIONS AND BUILDING SECTIONS

SCALE: 1/4" = 1'-0"
EPROJECT NO.: 1312624
CONSTR. CONTR. NO.
NAVFAC DRAWING NO.
12690181
SHEET 170 OF 315
S-501

DRAWFORM REVISION: 10 MARCH 2009

FILE NAME: H:\56427 NAS Oceana\Structural\Planset\10-0863-007-S-501.dwg LAYOUT NAME: ED-145 PLOTTED: Monday, March 23, 2015 - 9:05am USER: kjenrigan

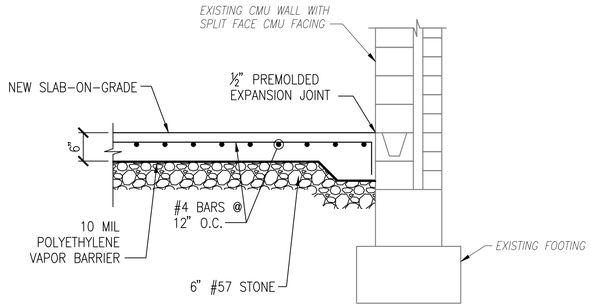

SECTION 3
SCALE: 3/4"=1'-0" S-401

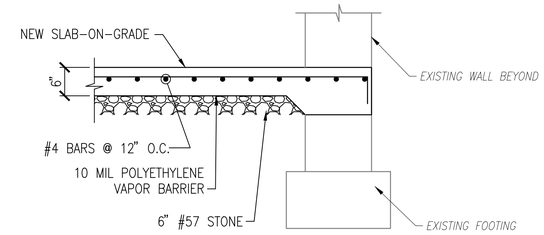

SECTION 4
SCALE: 3/4"=1'-0" S-401

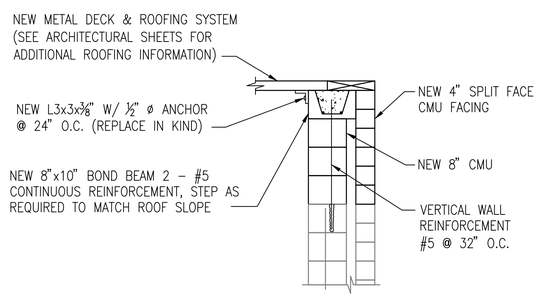

SECTION 5
SCALE: 3/4"=1'-0" S-401

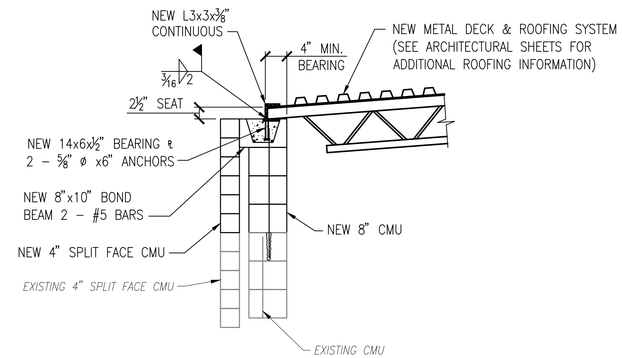

SECTION 6
SCALE: 3/4"=1'-0" S-401

ROOF NOTES:

1. REMOVE, STORE AND REINSTALL JOISTS. IF EXISTING JOISTS ARE NOT SALVAGEABLE, REPLACE IN KIND.
2. REMOVE METAL DECKING AND ROOFING SYSTEM.
3. REMOVE BOND BEAM AND ASSOCIATED 4" SPLIT FACE CMU.
4. PLACE THREE COURSES OF NEW 8" CMU BLOCK AND NEW 4" SPLIT FACE CMU.
5. EPOXY GROUT NEW VERTICAL WALL REINFORCEMENT INTO EXISTING WALL.
6. INSTALL NEW BOND BEAMS, REUSE EXISTING JOIST, AND INSTALL METAL DECK AND ROOFING SYSTEM.
7. SEE PLAN FOR JOIST SIZE AND SPACING.

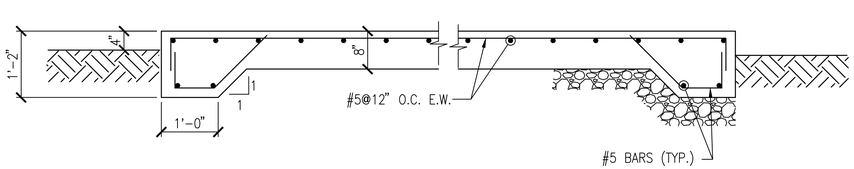

NOTES:

1. EQUIPMENT SLAB SHALL BE SIZED TO EXTEND 1'-0" BEYOND THE FOOTPRINT OF THE EQUIPMENT ON ALL SIDES.
2. SLAB-ON-GRADE SHALL BE PLACED ON 6" THICK #57 STONE.

TYPICAL SECTION - GENERATOR TRANSFORMER/5KV SWITCH PAD

SCALE: 3/4"=1'-0"

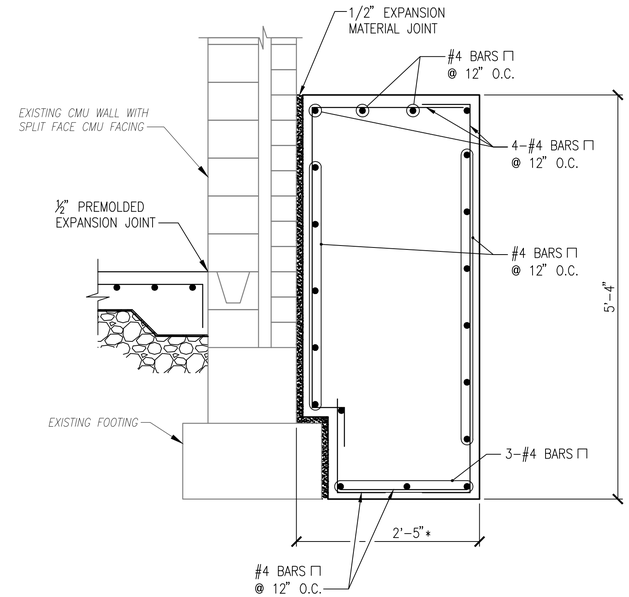

* CONTRACTOR TO COORDINATE DIMENSIONS WITH MECHANICAL. PROVIDE 6" MIN. CLEARANCE FROM EDGE OF EQUIPMENT.

SECTION 7
SCALE: 1"=1'-0" S-401

GENERAL NOTE

GRAPHIC SCALE

1/4"=1'-0"

1' 0 2' 4' 8'

SYM	DESCRIPTION	DATE	APPR

NAVFAC

Warren Barrett
COMMONWEALTH OF VIRGINIA
WARREN ARTHUR BARRETT II
Lic. No. 017260
PROFESSIONAL ENGINEER
SEAL

JOHNSON, MIRMIRAN THOMPSON
Gannett Fleming
A Joint Venture
272 Bendix Road, Suite 260
Virginia Beach, Virginia, 23452
Telephone: (757)499-1895
WEB: WWW.JMT.COM

A/E INFO

APPROVED
FOR COMMANDER NAVFAC
ACTIVITY
SATISFACTORY TO DATE
DES DRE DRW DRE CHK JRS
PM/DM
BRANCH MANAGER WAS
CHIEF ENG/ARCH

DEPARTMENT OF THE NAVY
NAVAL FACILITIES ENGINEERING COMMAND
NAVFAC MID-ATLANTIC
NORFOLK, VIRGINIA
NAVAL AIR STATION OCEANA
VIRGINIA BEACH, VIRGINIA
SPECIAL PROJECT RM10-9004
REPAIR RUNWAY 14L-32R PAVEMENT AND LIGHTING
VAULT E145 – ELEVATIONS AND BUILDING SECTIONS

HR IPT

SCALE: 1/4" = 1'-0"
EPROJECT NO.: 1312624
CONSTR. CONTR. NO.
NAVFAC DRAWING NO.
12690182
SHEET 171 OF 315
S-502

DRAWFORM REVISION: 10 MARCH 2009

FILE NAME: H:\56427 NAS Oceana\Structural\Planset\10-0863-007-S-502.dwg LAYOUT NAME: ED-145 PLOTTED: Monday, March 23, 2015 - 9:06am USER: kjernigan

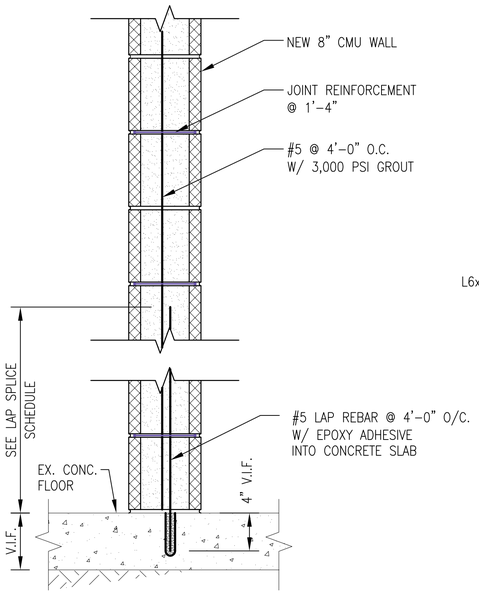

TYPICAL CMU WALL SECTION (1)

SCALE: 1 1/2"= 1'-0" S-503

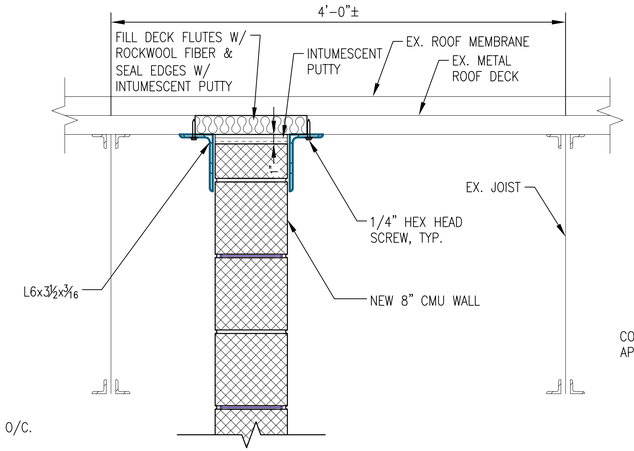

TYPICAL CMU WALL SUPPORT @ TOP (2)

SCALE: 1 1/2"= 1'-0" S-402

NOTE: CONTRACTOR SHALL ALSO PATCH STEEL BRIDGING AREA AS PASSING THROUGH NEW CMU WALL.

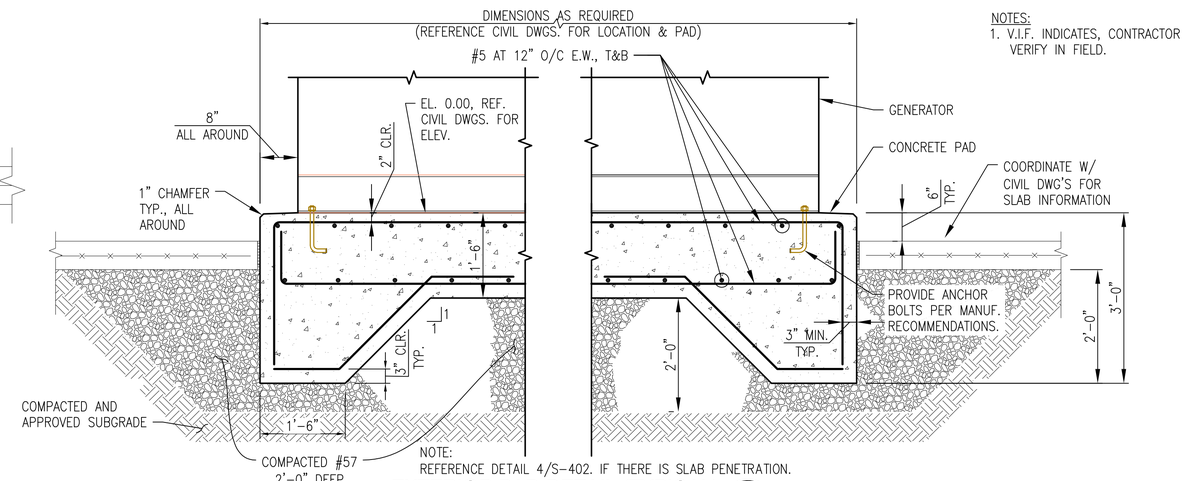

NOTES:
1. V.I.F. INDICATES, CONTRACTOR VERIFY IN FIELD.

NOTE: REFERENCE DETAIL 4/S-402. IF THERE IS SLAB PENETRATION.

EXTERIOR PAD DETAIL (TYPICAL) (5)

SCALE: 3/4"= 1'-0" S-503

LAP SPLICE SCHEDULE (f'c=4,000 PSI)

BAR SIZE	SLAB AND WALL		BEAM		STANDARD 90° HOOK		STANDARD 180° HOOK	
	OTHER BARS	TOP BARS	OTHER BARS	TOP BARS	1dh	12db	1dh	4db
#3	15"	22"	19"	28"	8"	5"	8"	2"
#4	19"	29"	25"	37"	10"	6"	10"	2"
#5	24"	38"	71"	47"	12"	8"	12"	3"
#6	29"	43"	37"	56"	15"	9"	15"	3"
#7	42"	63"	54"	81"	17"	11"	17"	4"
#8	48"	72"	62"	95"	19"	12"	19"	4"
#9	54"	81"	70"	105"	22"	14"	22"	5"

NOTES:
SLAB AND WALL: 6" MINIMUM REBAR SPACING
BEAM: MINIMUM CLEAR SPACING BETWEEN BARS = db (BAR DIAMETER)
MINIMUM CONCRETE COVER = 2.0" CLEAR

TOP BAR: TOP BAR FOR SLAB AND BEAM SHALL BE DEFINED AS REINFORCED SO PLACED THAT MORE THAN 12" OF CONCRETE IS CAST BELOW THE SPLICE.

STANDARD HOOKS: SIDE COVER MORE THAN 2.5"
END COVER (90° HOOK) MORE THAN 2"
MINIMUM COVER TO TAIL = 2"

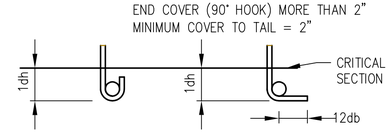

STANDARD 180° AND 90° END HOOKS

STANDARD HOOK LENGTH

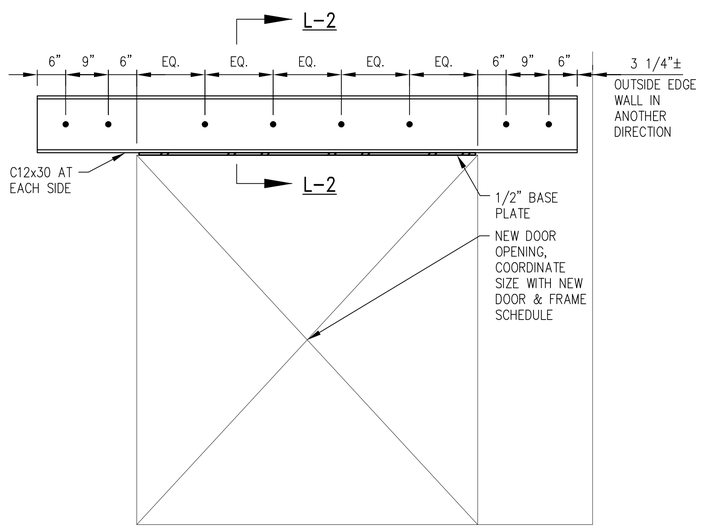

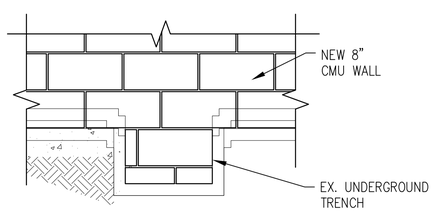

CMU WALL @ EX. TRENCH (3)

SCALE: 3/4"= 1'-0" S-503

NEW DOOR OPENING LINTEL DETAIL (4)

SCALE: 3/4"= 1'-0" S-503

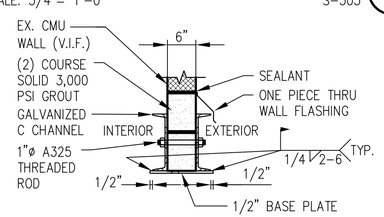

LINTEL SECTION L-2

LINTEL SCHEDULE

MARK	MEMBER	SPAN		
L1	8" (D)x8"(W) 3,000 PSI CONCRETE LINTEL W/ (2) #4 @ TOP & BOTTOM W/ (1)#3 ⊔ TIE	3'-6"		8" BEARING @ EACH END
L2	SEE DETAIL 4/S-503			

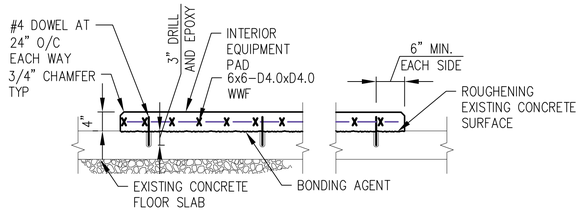

INTERIOR PAD DETAIL (TYPICAL) (6)

SCALE: 3/4"= 1'-0" S-503

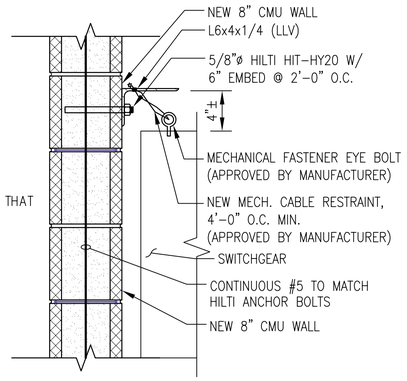

SWITCHGEAR LATERAL SUPPORT DETAIL (7)

SCALE: 1 1/2"= 1'-0" S-503

GRAPHIC SCALE

6" 0 6" 12" 18"
SCALE: ¾"= 1'-0"

4" 0 4" 8"
SCALE: 1½"= 1'-0"

SYM	DESCRIPTION	DATE	APPR

NAVFAC

Jeffrey Cerquetti
COMMONWEALTH OF VIRGINIA
JEFFREY CERQUETTI
Lic. No. 040468
PROFESSIONAL ENGINEER

JOHNSON, MIRMIRAN THOMPSON
Gannett Fleming
A Joint Venture
272 Bendix Road, Suite 260
Virginia Beach, Virginia, 23452
Telephone: (757)499-1895
WEB: WWW.JMT.COM

A/E INFO

APPROVED

FOR COMMANDER NAVFAC

ACTIVITY

SATISFACTORY TO DATE

DES JZ DRW FW CHK JC

PM/DM

BRANCH MANAGER WAS

CHIEF ENG/ARCH

DEPARTMENT OF THE NAVY
NAVAL FACILITIES ENGINEERING COMMAND
NAVFAC MID-ATLANTIC
NORFOLK, VIRGINIA
HR IPT
NAVAL AIR STATION OCEANA
VIRGINIA BEACH, VIRGINIA
SPECIAL PROJECT RM10-9004
REPAIR RUNWAY 14L-32R PAVEMENT AND LIGHTING
VAULT E-3015-STRUCTURAL DETAILS

SCALE: NOT TO SCALE
EPROJECT NO.: 1312624
CONSTR. CONTR. NO.
NAVFAC DRAWING NO. 12690183
SHEET 172 OF 315
S-503

DRAWFORM REVISION: 10 MARCH 2009

FILE NAME: Q:\SMD\100863_007_Repair_Runway_14L-32\CADD\Structures\S-503.dwg LAYOUT NAME: S-503 VAULT E-3015 - STRUCTURAL DETAILS PLOTTED: Monday, March 23, 2015 - 1:58pm USER: fwallace

ARCHITECTURAL LEGEND

- BRICK
- CMU
- ACOUSTICAL CMU
- CMIU
- SGFT / GLAZED CMU
- CONCRETE
- GYP BD / GROUT
- BATT INSULATION
- RIGID INSULATION
- COARSE AGGREGATE /BALLAST
- STEEL
- ALUMINUM
- FINISH LUMBER
- DIMENSIONAL LUMBER
- SHIM
- PLYWOOD
- ACOUSTICAL PANEL
- TILE
- EARTH
- (3) DOOR NUMBER REFERENCE
- [101] ROOM NUMBER REFERENCE
- L-1 LINTEL TYPE REFERENCE
- LV1 LOUVER TYPE REFERENCE
- 6 / A-501 – SECTION REFERENCE – DRAWING ON WHICH SECTION APPEARS
- 4 / A-501 – ELEVATION REFERENCE – DRAWING ON WHICH ELEVATION APPEARS
- BRACKET MOUNTED FIRE EXTINGUSHER
- LARGE SCALE REFERENCE

ABBREVIATIONS

ABV	ABOVE
AC	AIR CONDITIONER
ACST	ACOUSTIC
ADDL	ADDITIONAL
ADJ	ADJACENT
AFF	ABOVE FINISH FLOOR
AGGR	AGGREGATE
AL	ALUMINUM
ALT	ALTERNATE
ARCH	ARCHITECTURAL
ASB	ASBESTOS
ASPH	ASPHALT
ASPHRS	ASPHALT ROOF SHINGLES
ASSN	ASSOCIATION
ASST	ASSISTANT
ASSY	ASSEMBLY
AVE	AVENUE
AVG	AVERAGE
BALC	BALCONY
BD	BOARD
BETW	BETWEEN
BLDG	BUILDING
BLKG	BLOCKING
BLR	BOILER
BM	BEAM
BM	BENCHMARK
BOT	BOTTOM
BP	BASE PLATE
BRDG	BRIDGING
BRG	BEARING
BS	BOTH SIDES
BSMT	BASEMENT
CAB	CABINET
CAP	CAPACITY
CARP	CARPET
CDR	COILING DOOR
CER	CERAMIC
CER TILE	CERAMIC TILE
CI	CAST IRON
CIP	CAST-IRON PIPE
CJ	CONTROL JOINT
CL	CENTERLINE
CLG	CEILING
CLO	CLOSET
CLR	CLEAR
CMIU	CONCRETE MASONRY INSULATED UNIT
CMU	CONCRETE MASONRY UNIT
CNCL	CONCEALED
CO	CLEANOUT
CO	COMPANY
COL	COLUMN
COMP	COMPOSITION
CONC	CONCRETE
CONSTR	CONSTRUCTION
CONT	CONTINUOUS
CONTR	CONTRACTOR
CRV	CURVED
CSK	COUNTERSINK
CTD	COATED
CTR	CENTER
CUH	CABINET UNIT HEATER
D	DEPTH
DBL	DOUBLE
DEG	DEGREE
DEPT	DEPARTMENT
DET	DETAIL
DGL	DIAGONAL
DIA	DIAMETER
DIM	DIMENSION
DIV	DIVISION
DL	DEAD LOAD
DMPF	DAMPPROOFING
DN	DOWN
DPN	DEMOUNTABLE PARTITION MANUFACTURER
DR	DOOR
DS	DOWNSPOUT
DW	DISHWASHER
DWG	DRAWING
E	EAST
EA	EACH
EGEN	EMERGENCY GENERATOR
EF	EXHAUST FAN
EIFS	EXTERIOR INSULATION & FINISH SYSTEM
EL	ELEVATION
ELEC	ELECTRICAL
ELEV	ELEVATOR
ENTR	ENTRANCE
EQ	EQUAL
EQUIP	EQUIPMENT
EWC	ELECTRIC WATER COOLER
EXH	EXHAUST
EXIST	EXISTING
EXP	EXPANSION
EXP JT	EXPANSION JOINT
EXT	EXTERIOR
FAB	FABRICATE
FBD	FIBERBOARD
FD	FLOOR DRAIN
FDN	FOUNDATION
FDR	FIRE DOOR
FE	FIRE EXTINGUISHER
FEC	FIRE EXTINGUISHER & CABINET
FHY	FIRE HYDRANT
FIN	FINISH
FL	FLASHING
FLEX	FLEXIBLE
FLG	FLANGE
FLR	FLOOR
FLRG	FLOORING
FP	FIREPROOF
FRP	FIBERGLASS-REINFORCED PLASTICS
FT	FOOT
FTG	FOOTING
FURN	FURNITURE
GA	GAUGE
GALV	GALVANIZED
GAR	GARAGE
GEN	GENERATOR
GL	GLASS
GLU-LAM	GLUE-LAMINATED
GOVT	GOVERNMENT
GR	GRADE
GRD	GROUND
GVL	GRAVEL
GWB	GYPSUM WALLBOARD
GYP	GYPSUM
H	HIGH
HDWE	HARDWARE
HM	HOLLOW METAL
HMD	HOLLOW METAL DOOR
HORIZ	HORIZONTAL
HPT	HIGH POINT
HT	HEIGHT
HTR	HEATER
HVAC	HEATING, VENTILATING, & AIR CONDITIONING
ID	INSIDE DIAMETER
IE	THAT IS
IH	INTAKE HOOD
INSUL	INSULATION
INTR	INTERIOR
JST	JOIST
JT	JOINT
LAB	LABORATORY
LAM	LAMINATE
LAV	LAVATORY
LG	LENGTH
LH	LEFT HAND
LIB	LIBRARY
LIN	LINEAR
LL	LIVE LOAD
LLH	LONG LEG HORIZONTAL
LLV	LONG LEG VERTICAL
LPT	LOW POINT
LT	LIGHT
LWC	LIGHTWEIGHT CONCRETE
MAINT	MAINTENANCE
MAS	MASONRY
MATL	MATERIAL
MAX	MAXIMUM
MECH	MECHANICAL
MEMB	MEMBRANE
MEZZ	MEZZANINE
MFR	MANUFACTURER
MGR	MANAGER
MH	MANHOLE
MIL	MILITARY
MIN	MINIMUM
MISC	MISCELLANEOUS
MET	METAL
ML	METAL LATH
MLDG	MOLDING
MLP	METAL LATH AND PLASTER
MO	MASONRY OPENING
MOD	MOTOR OPERATED DAMPER
MTG	MOUNTING
N	NORTH
NA	NOT APPLICABLE
NIC	NOT IN CONTRACT
NO	NUMBER
NRC	NOISE-REDUCTION COEFFICIENT
NTS	NOT TO SCALE
OA	OVERALL
OC	ON CENTER
OD	OUTSIDE DIAMETER
OFF	OFFICE
OH	OPPOSITE HAND
OHDR	OVERHEAD DOOR
OPNG	OPENING
OPP	OPPOSITE
OSB	ORIENTED STRAND BOARD
P/L	PROPERTY LINE
PASS	PASSENGER
PEB	PRE-ENGINEERED BUILDING
PERF	PERFORATED
PL	PLATE
PLAS	PLASTER
PLBG	PLUMBING
PLYWD	PLYWOOD
PNL	PANEL
PNT	PAINT
PORC	PORCELAIN
PR	PAIR
PREFAB	PREFABRICATED
PROJ	PROJECT
PSF	POUNDS PER SQUARE FOOT
PSI	POUNDS PER SQUARE INCH
PT	POINT
PTD	PAINTED
PTN	PARTITION
PVC	POLYVINYL CHLORIDE
QTF	QUARRY-TILE FLOOR
R	RADIUS
R	RISER
RD	ROOF DRAIN
REFR	REFRIGERATOR
REINF	REINFORCE
REQD	REQUIRED
RET	RETURN
REV	REVISION
REG	REGISTER
RFG	ROOFING
RH	RIGHT HAND
RM	ROOM
RWC	RAIN WATER CONDUCTOR
S	SOUTH
SAPC	SUSPENDED ACOUSTICAL PANEL CEILING
SCHED	SCHEDULE
SDG	SIDING
SEC	SECTION
SF	SQUARE FOOT
SGFT	STRUCTURAL GLAZED FACING TILE
SH	SHOWER
SHM	SECURITY HOLLOW METAL
SHT	SHEET
SI	INTERNATIONAL SYSTEM OF UNITS
SIM	SIMILAR
SKY	SKYLIGHT
SLDR	SLIDING DOOR
SMLS	SEAMLESS
SPEC	SPECIFICATION
SPKLR	SPRINKLER
SPKR	SPEAKER
SQ	SQUARE
SS	STAINLESS STEEL
ST	STAINED
STD	STANDARD
STL	STEEL
STOR	STORAGE
STRUCT	STRUCTURE/STRUCTURAL
STWY	STAIRWAY
SUPT	SUPERINTENDENT
SUPVR	SUPERVISOR
SURF	SURFACE
SUSP	SUSPENDED/SUSPENSION
SYS	SYSTEM
T	TREAD
T/	TOP OF
T&B	TOP AND BOTTOM
T&G	TONGUE AND GROOVE
TAN	TANGENT
TDD	TELECOMMUNICATION DISPLAY DEVICE
TEL	TELEPHONE
TEMP	TEMPERED
TER	TERRAZZO
THRU	THROUGH
TLT	TOILET
TRTD	TREATED
TYP	TYPICAL
UNO	UNLESS NOTED OTHERWISE
VAT	VINYL ASBESTOS TILE
VCT	VINYL COMPOSITION TILE
VERT	VERTICAL
VIF	VERIFY IN FIELD
VTR	VENT THRU ROOF
W	WEST
W	WIDE
W/	WITH
W/O	WITHOUT
WBD	WALLBOARD
WC	WATER CLOSET
WD	WOOD
WDR	WOOD DOOR
WH	WATER HEATER
WTRPRF	WATERPROOFING
WWF	WELDED WIRE FABRIC
XFMR	TRANSFORMER

GENERAL NOTES

1. NOT ALL SYMBOL DEPICTED ON THIS DRAWING ARE USED IN THE ARCHITECTURAL DRAWINGS.
2. VERIFY ALL DIMENSIONS IN THE FIELD.
3. VERIFY ALL FIELD CONDITIONS.
4. ALL MASONRY DIMENSIONS ARE NOMINAL UNLESS NOTED OTHERWISE.
5. ALL WORK WILL BE COMPLETED IN ACCORDANCE WITH THE LATEST VERSIONS OF I.B.C. AND LIFE SAFETY CODES.
6. DO NOT SCALE DRAWINGS FOR PURPOSES OF CONSTRUCTION.
7. ANY DEVIATION FROM, OR IN FIELD ALTERATION TO THESE DRAWINGS, AND SPECIFICATIONS IS STRICTLY PROHIBITED WITHOUT PRIOR APPROVAL OF C.O.R. ANY SUCH ALTERATIONS SHALL BE CORRECTED AT ONCE, WITH NO EXPENSE TO THE OWNER.
8. THE CONTRACTOR SHALL BE RESPONSIBLE FOR COORDINATING THE WORK OF ALL TRADES REGARDLESS OF DISCREPENCIES IN THE CONTRACT DOCUMENTS. NO ADDITIONAL COSTS WILL BE PAID BY THE OWNER TO RECTIFY WORK TO BE RELOCATED DUE TO LACK OF JOBSITE COORDINATION.
9. DEMOLITION, CUTTING, AND PATCHING OF ANYTHING REQUIRED TO CONSTRUCT THE PROJECT IS HEREIN MADE A PART OF THESE DOCUMENTS.
10. THE CONTRACTOR SHALL SECURE AND PAY FOR ALL PERMITS.
11. EXISTING TO REMAIN IS SHOWN IN GRAY LINE COLOR. THE NEW WORK AND REQUIRED DEMOLITION ARE SHOWN IN BLACK LINE COLOR. IF THE DIFFERENCE IS NOT OBVIOUS, REPORT TO THE ARCHITECT IMMEDIATELY.
12. ALL WORK INDICATED OR SHOWN GRAPHICALLY AS "EXISTING TO REMAIN" WILL BE THE CONTRACTOR'S RESPONSIBILITY TO WORK AROUND WITHOUT DISTURBING. IF DISTURBED, THE CONTRACTOR WILL REPLACE AT NO ADDITIONAL COST TO THE OWNER.
13. CLEAN ALL EXISTING EXTERIOR MASONRY TO REMAIN. SEE SPECIFICATION SECTION 04 01 00.91 FOR DETAILS.
14. REPOINT ALL EXISTING MASONRY TO REMAIN. SEE SPECIFICATION SECTION 04 01 00.91 FOR DETAILS.

SYM	DESCRIPTION	DATE	APPR

NAVFAC

James Schneider
COMMONWEALTH OF VIRGINIA
JAMES ROBERT SCHNEIDER
Lic. No. 0401 011031
ARCHITECT
SEAL

JOHNSON, MIRMIRAN THOMPSON
Gannett Fleming
A Joint Venture
272 Bendix Road, Suite 260
Virginia Beach, Virginia, 23452
Telephone: (757)499-1895
WEB: WWW.JMT.COM

A/E INFO

APPROVED

FOR COMMANDER NAVFAC

ACTIVITY

SATISFACTORY TO DATE

DES DRE DRW DRE CHK JRS

PM/DM

BRANCH MANAGER TWO

CHIEF ENG/ARCH

DEPARTMENT OF THE NAVY
NAVAL FACILITIES ENGINEERING COMMAND
NAVFAC MID-ATLANTIC
NORFOLK, VIRGINIA
HR IPT
NAVAL AIR STATION OCEANA
VIRGINIA BEACH, VIRGINIA
SPECIAL PROJECT RM10-9004
REPAIR RUNWAY 14L-32R PAVEMENT AND LIGHTING
ARCHITECTURAL LEGEND, ABBREVIATIONS, AND NOTES

SCALE: NONE
EPROJECT NO.: 1312624
CONSTR. CONTR. NO.
NAVFAC DRAWING NO. 12690184
SHEET 173 OF 315
A-001

DRAWFORM REVISION: 10 MARCH 2009

FILE NAME: H:\56427 NAS Oceana\Architectural\Pproset\10-0863-007-A-001.dwg LAYOUT NAME: M-001 PLOTTED: Monday, March 23, 2015 - 9:09am USER: jrothe

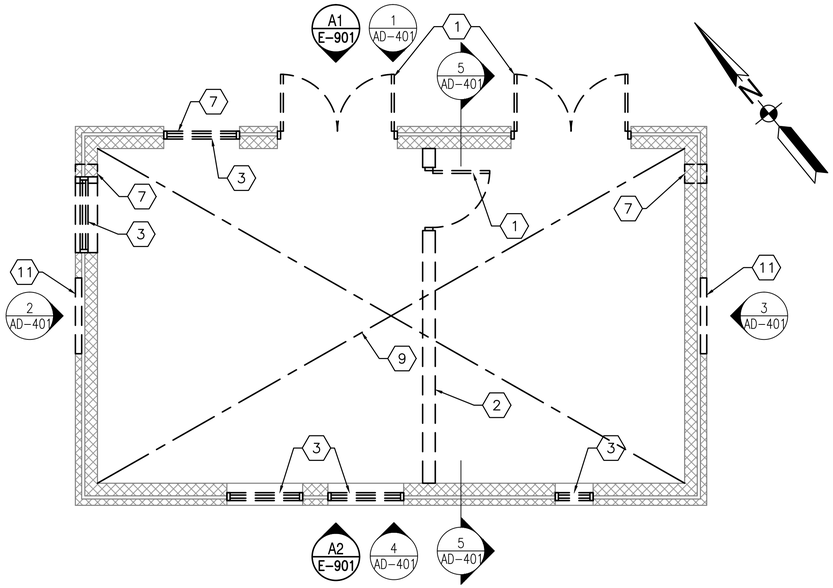

VAULT E-145 DEMOLITION FLOOR PLAN

SCALE: 1/4"=1'-0"

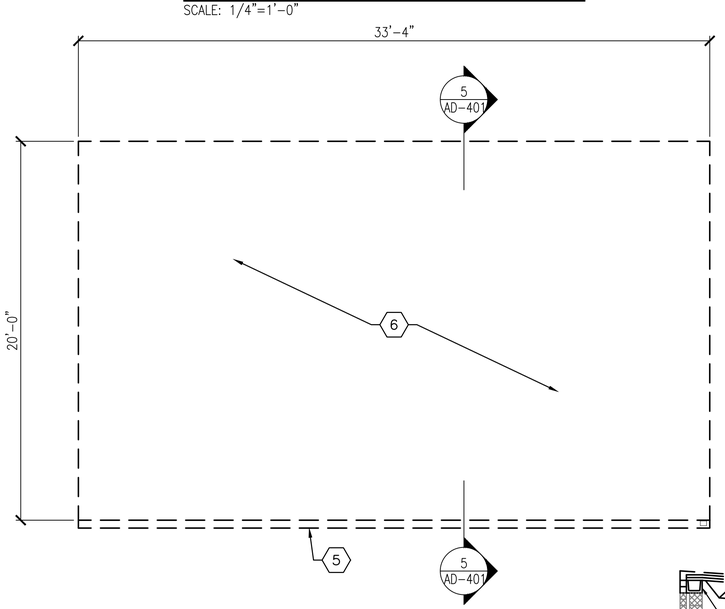

VAULT E-145 DEMOLITION ROOF PLAN

SCALE: 1/4"=1'-0"

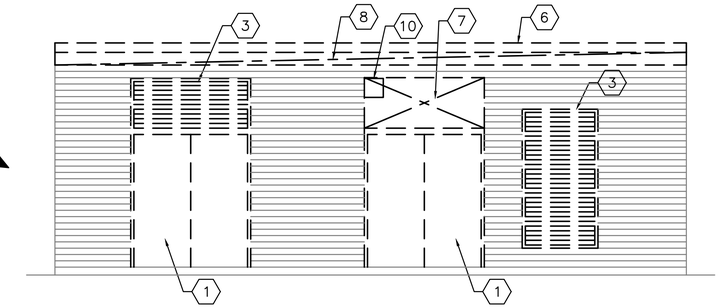

DEMOLITION ELEVATION 1

SCALE: 1/4"=1'-0" AD401

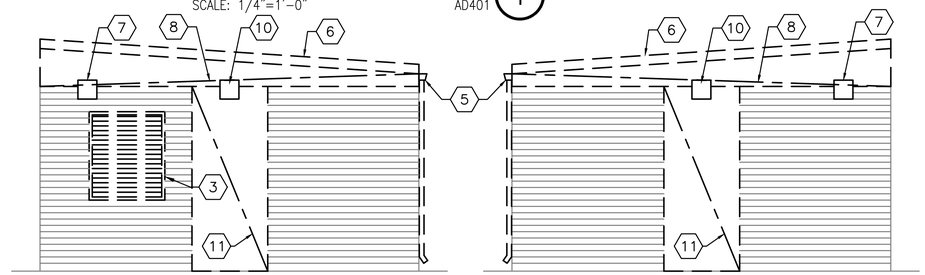

DEMOLITION ELEVATION 2

SCALE: 1/4"=1'-0" AD401

DEMOLITION ELEVATION 3

SCALE: 1/4"=1'-0" AD401

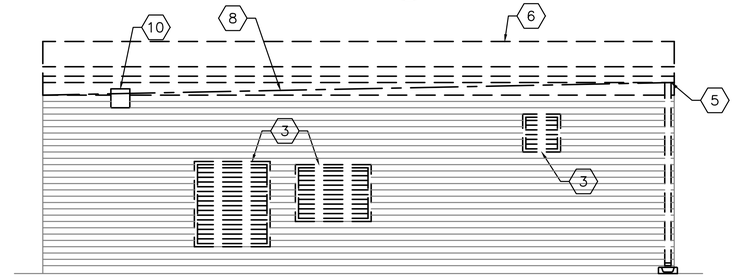

DEMOLITION ELEVATION 4

SCALE: 1/4"=1'-0" AD401

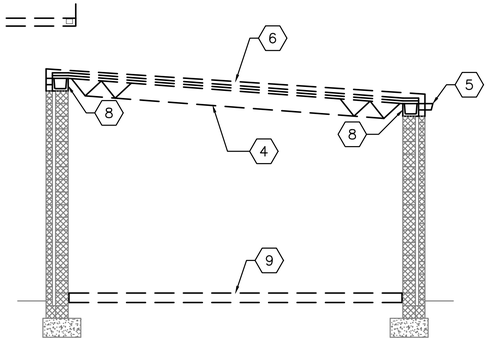

VAULT E-145 DEMOLITION SECTION 5

SCALE: 1/4"=1'-0" AD401

DEMOLITION KEYNOTES

1. REMOVE HOLLOW METAL DOOR AND FRAME, INCLUDING ANY ANCHORS, FASTENERS, ATTACHMENTS AND RELATED ACCESSORIES. PREP FINISHES FOR INSTALLATION OF NEW CONSTRUCTION.
2. REMOVE CMU PARTITION.
3. REMOVE LOUVER AND ACCESSORIES.
4. REMOVE AND SALVAGE STEEL JOISTS. REPLACE WITH NEW WORK.
5. REMOVE METAL GUTTER AND DOWNSPOUT.
6. REMOVE MODIFIED BITUMINOUS MEMBRANE ROOFING SYSTEM AND ACCESSORIES INCLUDING BUT NOT LIMITED TO THE ROOF INSULATION, FASCIA, FLASHING AND WOOD BLOCKING.
7. PROVIDE OPENING FOR NEW DOOR/LOUVER. MAKE OPENING LARGE ENOUGH TO INSTALL REQUIRED FRAMING AND ANCHORAGE PER DETAILS.
8. REMOVE BOND BEAM AND ASSOCIATED 4" SPLIT FACE CMU. SEE STRUCTURAL DRAWINGS.
9. REMOVE CONCRETE SLAB ON GRADE.
10. REMOVE 12"x12" SMOOTH FACE CMU.
11. REMOVE 4" SPLIT FACE CMU

KEY MAP

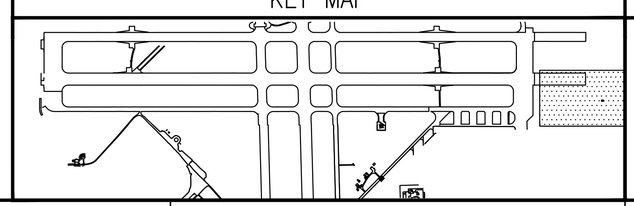

GRAPHIC SCALE

1/4"=1'-0"

1' 0 2' 4' 8'

SYM	DESCRIPTION	DATE	APPR

NAVFAC

James Schneider
COMMONWEALTH OF VIRGINIA
JAMES ROBERT SCHNEIDER
Lic. No. 0401 011031
ARCHITECT
SEAL

JOHNSON, MIRMIRAN THOMPSON
Gannett Fleming
A Joint Venture
272 Bendix Road, Suite 260
Virginia Beach, Virginia, 23452
Telephone: (757)499-1895
WEB: WWW.JMT.COM
A/E INFO

APPROVED

FOR COMMANDER NAVFAC

ACTIVITY

SATISFACTORY TO DATE

DES DRE DRW DRE CHK JRS

PM/OM

BRANCH MANAGER TLO

CHIEF ENG/ARCH

DEPARTMENT OF THE NAVY
HR IPT
NAVAL FACILITIES ENGINEERING COMMAND
NAVFAC MID-ATLANTIC
NORFOLK, VIRGINIA
NAVAL AIR STATION OCEANA
VIRGINIA BEACH, VIRGINIA
SPECIAL PROJECT RM10-9004
REPAIR RUNWAY 14L-32R PAVEMENT AND LIGHTING
VAULT E-145 - DEMOLITION

SCALE: 1/4" = 1'-0"

EPROJECT NO.: 1312624

CONSTR. CONTR. NO.

NAVFAC DRAWING NO.
12690185

SHEET 174 OF 315

AD401

DRAWFORM REVISION: 10 MARCH 2009

FILE NAME: H:\56427 NAS Oceana\Architectural\Planset\10-0863-007-AD-401.dwg LAYOUT NAME: ED-145 PLOTTED: Monday, March 23, 2015 - 9:16am USER: devans

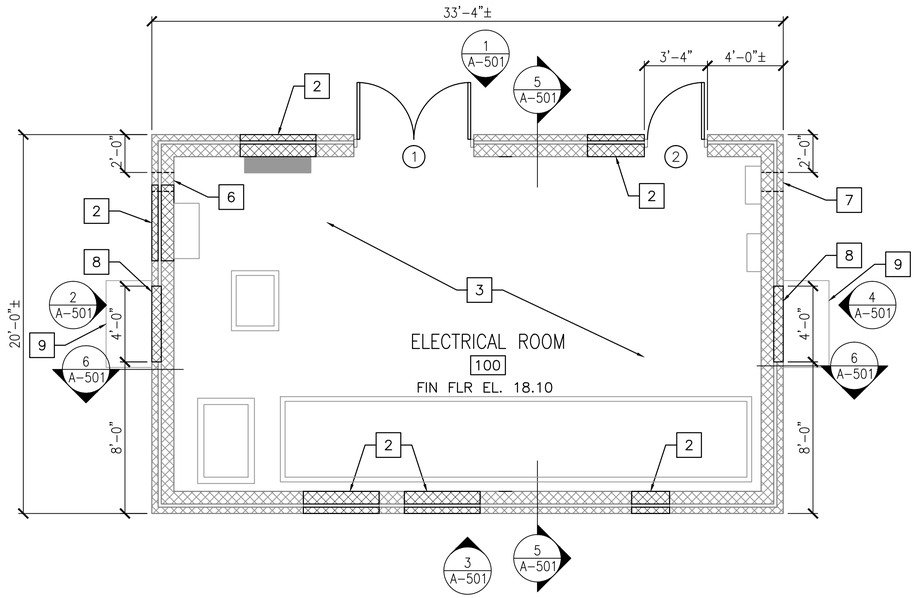

VAULT E-145 FLOOR PLAN

SCALE: 1/4" = 1'-0"

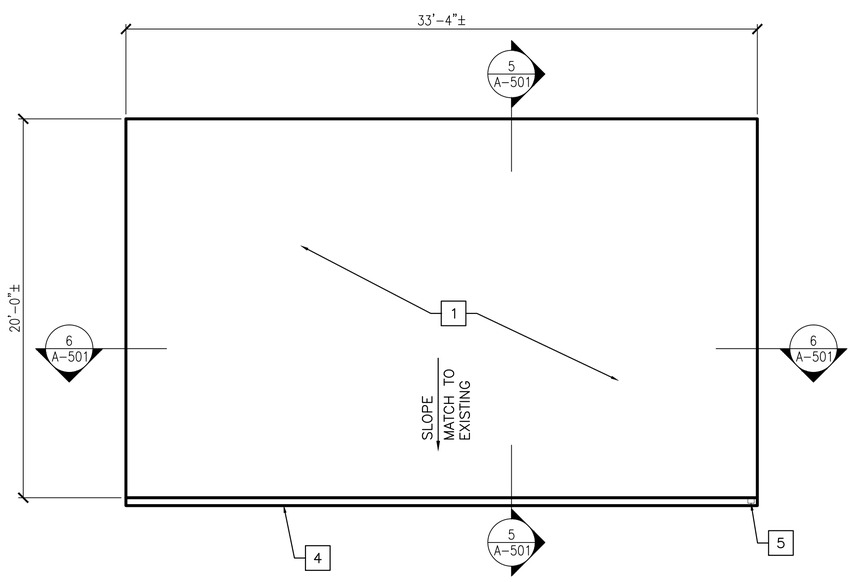

VAULT E-145 ROOF PLAN

SCALE: 1/4" = 1'-0"

CONSTRUCTION KEYNOTES

1. MEMBRANE ROOFING SYSTEM OVER RIGID INSULATION.
2. INFILL OPENING LEFT BY DEMOLISHED LOUVER/DOOR. MATCH EXISTING MATERIALS.
3. CONCRETE SLAB ON GRADE.
4. PREFINISHED METAL GUTTER.
5. PREFINISHED METAL DOWNSPOUT.
6. EXHAUST LOUVER. SEE ELEVATION DRAWING A-501 AND MECHANICAL DRAWINGS.
7. INTAKE LOUVER. SEE ELEVATION DRAWINGS A-501 AND MECHANICAL DRAWINGS.
8. SMOOTH FACE CMU AT HEAT PUMP. SEE ELEVATIONS DRAWING A-501 AND MECHANICAL DRAWINGS FOR DETAILS.
9. CONCRETE EQUIPMENT PAD. SEE ELEVATIONS DRAWING A-501 AND STRUCTURAL DRAWINGS FOR DETAILS.

KEY MAP

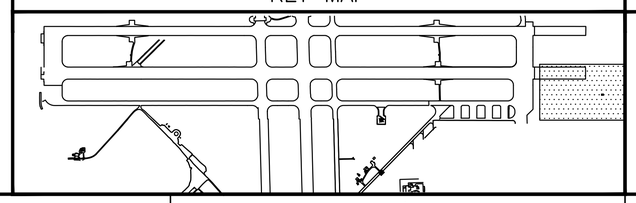

GRAPHIC SCALE

1/4"=1'-0"

1' 0 2' 4' 8'

SYM	DESCRIPTION	DATE	APPR

NAVFAC

James Schneider
COMMONWEALTH OF VIRGINIA
JAMES ROBERT SCHNEIDER
Lic. No. 0401 011031
ARCHITECT
SEAL

JOHNSON, MIRMIRAN THOMPSON
Gannett Fleming
A Joint Venture
272 Bendix Road, Suite 260
Virginia Beach, Virginia, 23452
Telephone: (757)499-1895
WEB: WWW.JMT.COM

A/E INFO

APPROVED

FOR COMMANDER NAVFAC

ACTIVITY

SATISFACTORY TO DATE

DES DRE DRW DRE CHK JRS

PM/DM

BRANCH MANAGER TLO

CHIEF ENG/ARCH

DEPARTMENT OF THE NAVY
NAVAL FACILITIES ENGINEERING COMMAND
NAVFAC MID-ATLANTIC
NORFOLK, VIRGINIA
HR IPT
NAVAL AIR STATION OCEANA
VIRGINIA BEACH, VIRGINIA
SPECIAL PROJECT RM10-9004
REPAIR RUNWAY 14L-32R PAVEMENT AND LIGHTING
VAULT E-145 - FLOOR & ROOF PLAN

SCALE: 1/4" = 1'-0"

EPROJECT NO.: 1312624

CONSTR. CONTR. NO.

NAVFAC DRAWING NO.
12690186

SHEET 175 OF 315

A-401

DRAWFORM REVISION: 10 MARCH 2009

FILE NAME: H:\56427 NAS Oceana\Architectural\Parset\10-0863-007-A-401.dwg LAYOUT NAME: ED-145 PLOTTED: Monday, March 23, 2015 - 9:17am USER: devans

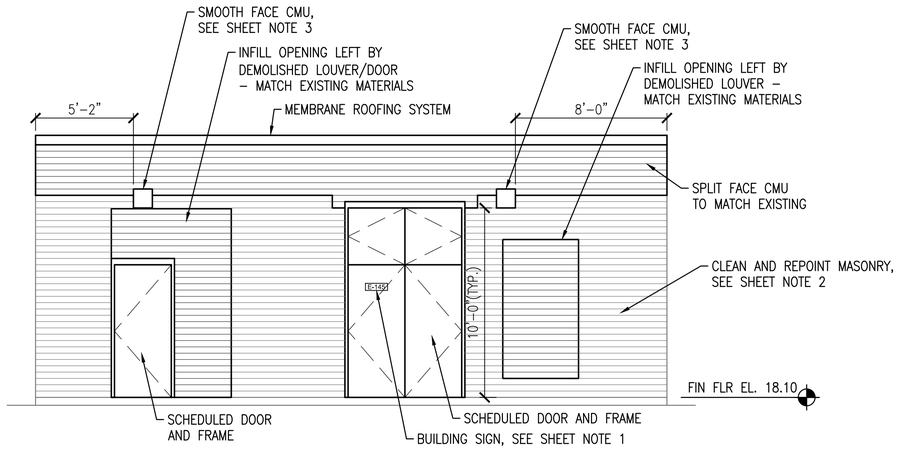

VAULT E-145 ELEVATION 1

SCALE: 1/4" = 1'–0" A–401

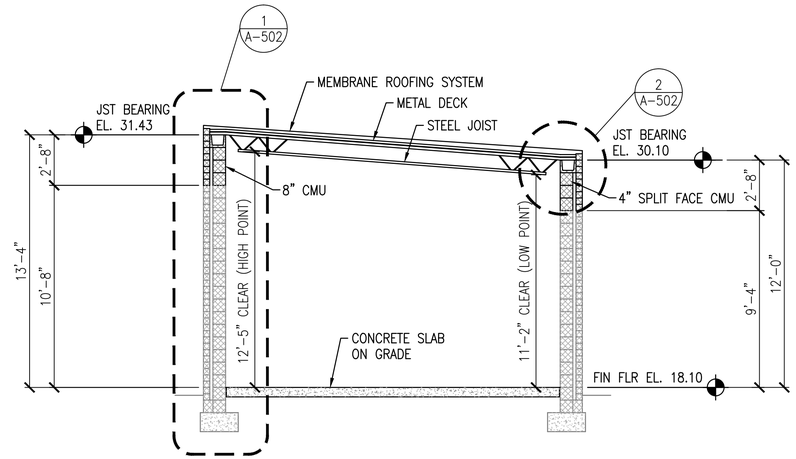

VAULT E-145 BUILDING SECTION 5

SCALE: 1/4" = 1'–0" A–401

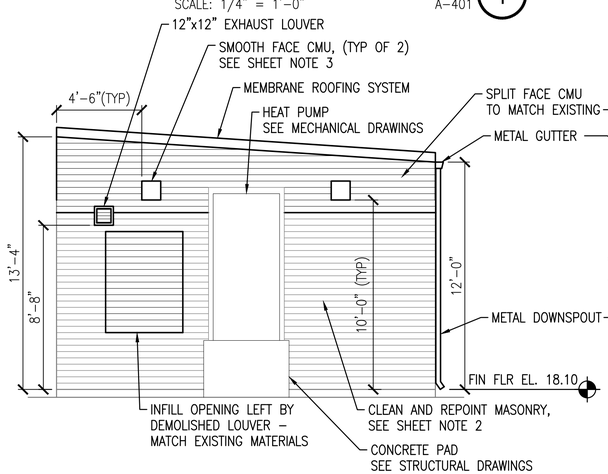

VAULT E-145 ELEVATION 2

SCALE: 1/4" = 1'–0" A–401

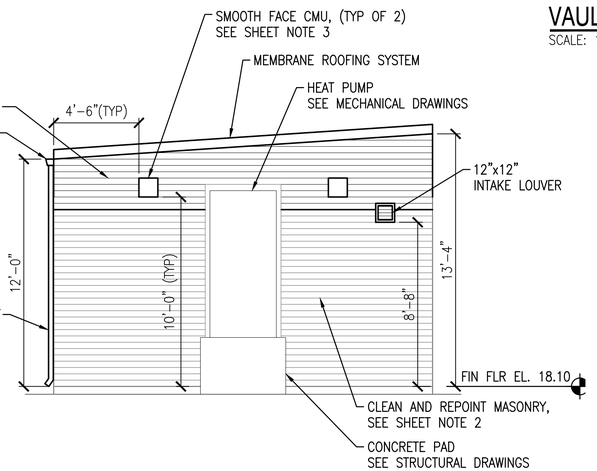

VAULT E-145 ELEVATION 4

SCALE: 1/4" = 1'–0" A–401

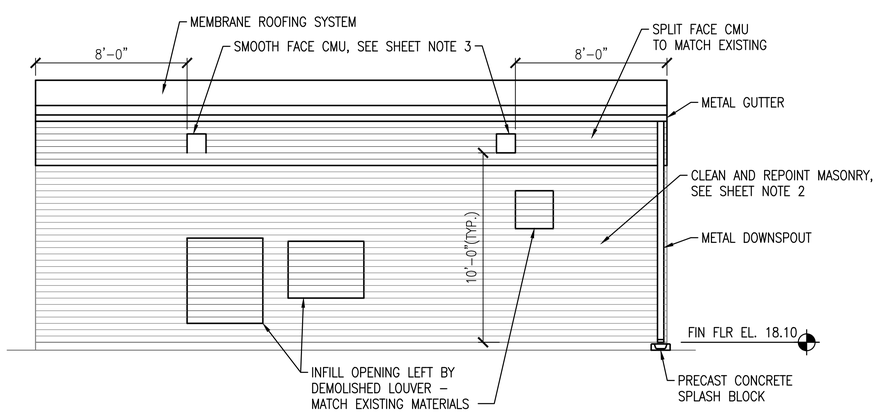

VAULT E-145 ELEVATION 3

SCALE: 1/4" = 1'–0" A–401

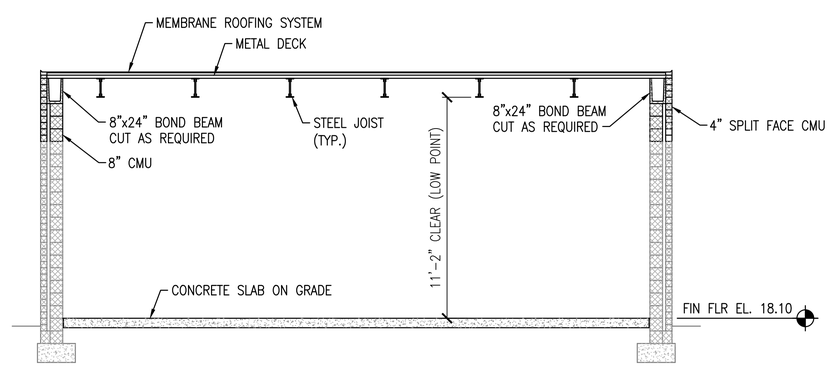

VAULT E-145 BUILDING SECTION 6

SCALE: 1/4" = 1'–0" A–401

SHEET NOTES

1. BUILDING SIGN MOUNTED TO DOOR. LETTERING HEIGHT TO BE APPROXIMATELY 3" HIGH. VERIFY BUILDING SIGNAGE STANDARDS WITH BASE.
2. CLEAN AND REPOINT ALL EXISTING MASONRY TO REMAIN. SEE SPECIFICATIONS FOR DETAILS.
3. 12"x12" SMOOTH FACE CMU TO MOUNT LIGHT FIXTURE. SEE ELECTRICAL DRAWINGS FOR LIGHT FIXTURE DETAILS.

GRAPHIC SCALE

1/4"=1'–0" 1' 0 2' 4' 8'

SYM	DESCRIPTION	DATE	APPR

NAVFAC

James Schneider

COMMONWEALTH OF VIRGINIA
JAMES ROBERT SCHNEIDER
Lic. No. 0401 011031
ARCHITECT

JOHNSON, MIRMIRAN THOMPSON
Gannett Fleming
A Joint Venture
272 Bendix Road, Suite 260
Virginia Beach, Virginia, 23452
Telephone: (757)499–1895
WEB: WWW.JMT.COM

A/E INFO

APPROVED
FOR COMMANDER NAVFAC
ACTIVITY
SATISFACTORY TO DATE
DES DRE DRW DRE CHK JRS
PM/DM
BRANCH MANAGER TLO
CHIEF ENG/ARCH

DEPARTMENT OF THE NAVY
NAVAL FACILITIES ENGINEERING COMMAND
NAVFAC MID-ATLANTIC
NORFOLK, VIRGINIA
HR IPT
NAVAL AIR STATION OCEANA
VIRGINIA BEACH, VIRGINIA
SPECIAL PROJECT RM10-9004
REPAIR RUNWAY 14L-32R PAVEMENT AND LIGHTING
VAULT E145 – ELEVATIONS AND BUILDING SECTIONS

SCALE: 1/4" = 1'–0"
EPROJECT NO.: 1312624
CONSTR. CONTR. NO.
NAVFAC DRAWING NO. 12690187
SHEET 176 OF 315
A-501

DRAWFORM REVISION: 10 MARCH 2009

FILE NAME: H:\56427 NAS Oceana\Architectural\Pinnell\10-0863-007-A-501.dwg LAYOUT NAME: ED-145 PLOTTED: Monday, March 23, 2015 – 9:18am USER: devons

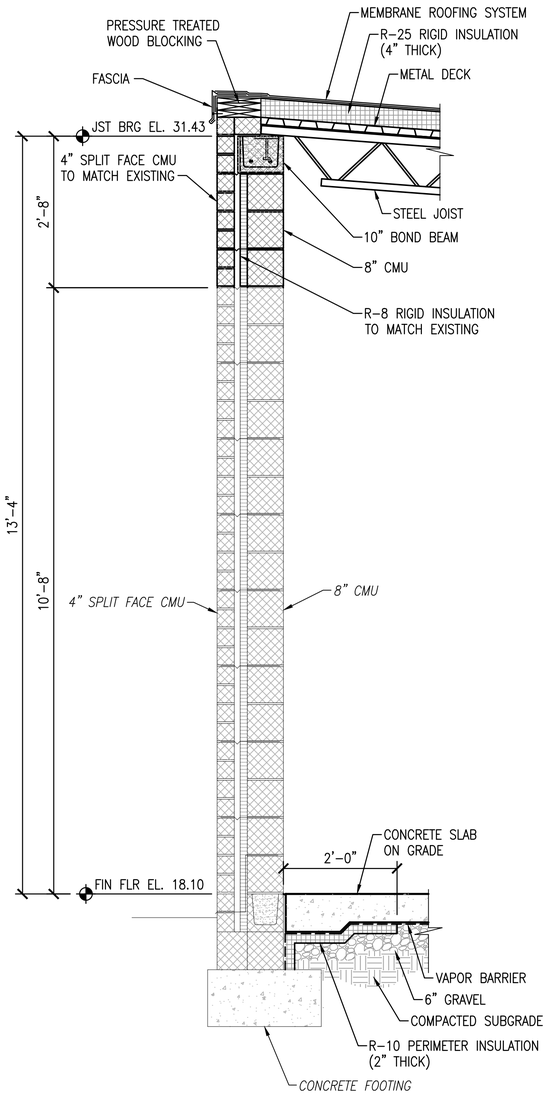

VAULT E-145 WALL SECTION

SCALE: 3/4"=1'-0" A-501 (1)

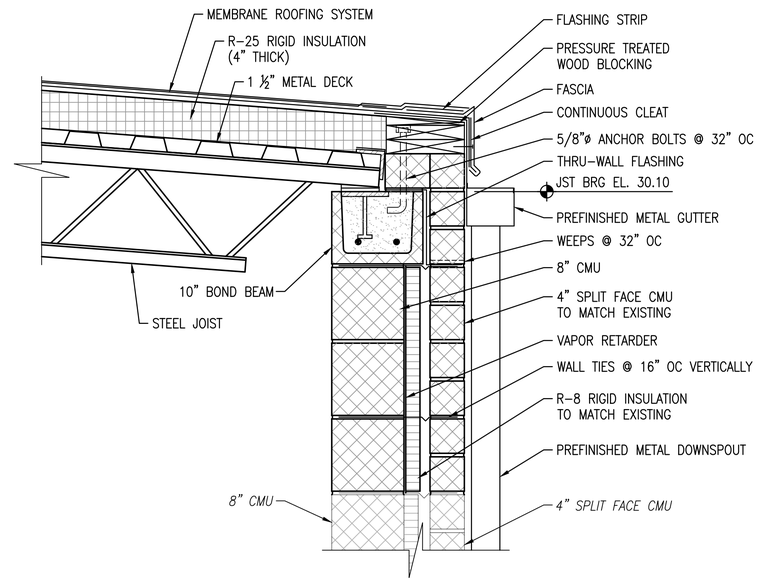

VAULT E-145 ROOF DETAIL

SCALE: 1 1/2"=1'-0" A-501 (2)

GRAPHIC SCALE

3/4"=1'-0" 1' 6" 0 1' 2' 3'

1 1/2"=1'-0" 3210 3" 6" 12" 24"

SYM	DESCRIPTION	DATE	APPR

NAVFAC

James Schneider
COMMONWEALTH OF VIRGINIA
JAMES ROBERT SCHNEIDER
Lic. No. 0401 011031
ARCHITECT
SEAL

JOHNSON, MIRMIRAN THOMPSON
Gannett Fleming
A Joint Venture
272 Bendix Road, Suite 260
Virginia Beach, Virginia, 23452
Telephone: (757)499-1895
WEB: WWW.JMT.COM

A/E INFO

APPROVED

FOR COMMANDER NAVFAC

ACTIVITY

SATISFACTORY TO DATE

DES DRE DRW DRE CHK JRS

PM/DM

BRANCH MANAGER TLO

CHIEF ENG/ARCH

DEPARTMENT OF THE NAVY
NAVAL FACILITIES ENGINEERING COMMAND
NAVFAC MID-ATLANTIC
NORFOLK, VIRGINIA
HR IPT
NAVAL AIR STATION OCEANA
VIRGINIA BEACH, VIRGINIA
SPECIAL PROJECT RM10-9004
REPAIR RUNWAY 14L-32R PAVEMENT AND LIGHTING
VAULT E-145 – WALL SECTIONS AND DETAILS

SCALE: AS SHOWN
EPROJECT NO.: 1312624
CONSTR. CONTR. NO.
NAVFAC DRAWING NO. 12690188
SHEET 177 OF 315

A-502

DRAWFORM REVISION: 10 MARCH 2009

FILE NAME: H:\56427 NAS Oceana\Architectural\Planset\10-0863-007-A-502.dwg LAYOUT NAME: ED-145 PLOTTED: Monday, March 23, 2015 - 9:19am USER: devans

DOORS AND FRAMES

DOOR NUMBER	DOOR SIZE W	DOOR SIZE H	DOOR SIZE T	DOOR MAT	DOOR TYPE	DOOR FINISH	DOOR GLASS	DOOR LOUVER W	DOOR LOUVER H	FRAME MAT	FRAME TYPE	FRAME DETAILS FINISH	FRAME DETAILS HEAD	FRAME DETAILS JAMB(S)	FRAME DETAILS SILL	FIRE RATING LAB	FIRE RATING HOUR	HARDWARE SET NO.	LINTEL	REMARKS
1	(2)3'-0"	10'-0"	1 3/4"	HM	B	PT	–			HM	2	PT	1	2				1	L-1	–
2	3'-0"	7'-0"	1 3/4"	HM	A	PT	–			HM	1	PT	1	2				2	L-1	–

–

ROOM FINISHES

ROOM #	ROOM NAME	FLOOR MATERIAL	BASE/TRIM MATERIAL	WALL MATERIAL	CEILING MATERIAL	CEILING HEIGHT	REMARKS
100	ELECTRICAL ROOM	CONCRETE-SEALANT/HARDENER	PAINT	CMU – PAINT	EXPOSED-PAINT	VARIES	1

NOTES: 1. PAINT ROOF DECK, STEEL JOISTS, CONDUIT, ETC.

FRAME TYPES

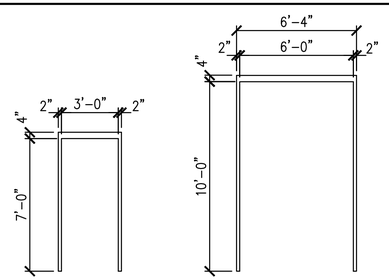

1 SINGLE DOOR

2 DOUBLE DOORS

DOOR TYPES

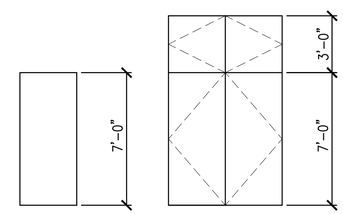

A FLUSH DOOR

B DOUBLE DOOR W/ DOUBLE TRANSOM

LINTEL SCHEDULE

L-1	8" PRE-CAST CMU LINTEL – 8" BEARING AT EACH END & 6"x4"x5/16" STEEL ANGLE

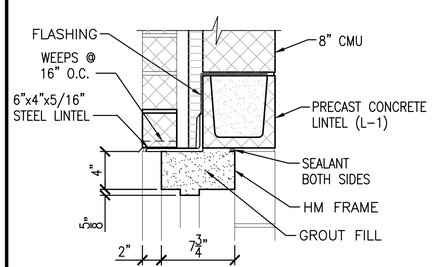

HEAD 1

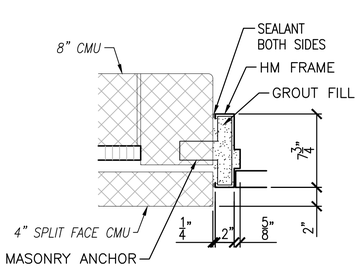

JAMB 2

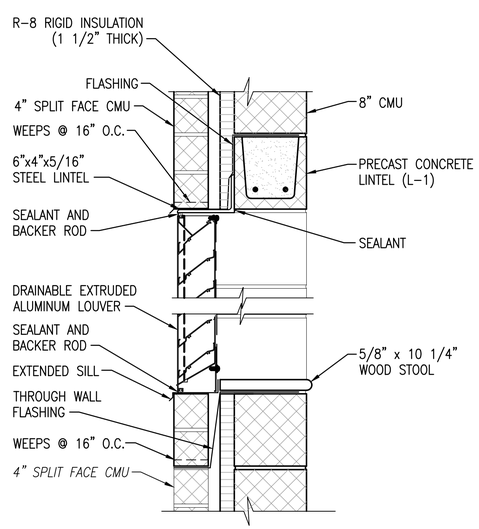

VAULT E-145 LOUVER DETAIL 1

SCALE: 1 1/2"=1'-0" A-501

SYM	DESCRIPTION	DATE	APPR

NAVFAC

James Schneider

COMMONWEALTH OF VIRGINIA
JAMES ROBERT SCHNEIDER
Lic. No. 0401 011031
ARCHITECT
SEAL

JOHNSON, MIRMIRAN THOMPSON
Gannett Fleming
A Joint Venture
272 Bendix Road, Suite 260
Virginia Beach, Virginia, 23452
Telephone: (757)499-1895
WEB: WWW.JMT.COM
A/E INFO

APPROVED

FOR COMMANDER NAVFAC

ACTIVITY

SATISFACTORY TO DATE

DES DRE DRW DRE CHK JRS

PM/DM

BRANCH MANAGER TWO

CHIEF ENG/ARCH

DEPARTMENT OF THE NAVY
NAVAL FACILITIES ENGINEERING COMMAND
NAVFAC MID-ATLANTIC
NORFOLK, VIRGINIA
HR IPT
NAVAL AIR STATION OCEANA
VIRGINIA BEACH, VIRGINIA
SPECIAL PROJECT RM10-9004
REPAIR RUNWAY 14L-32R PAVEMENT AND LIGHTING
VAULT E-145 – SCHEDULES AND DETAILS

SCALE: AS SHOWN
EPROJECT NO.: 1312624
CONSTR. CONTR. NO.
NAVFAC DRAWING NO. 12690189
SHEET 178 OF 315

A-601

DRAWFORM REVISION: 10 MARCH 2009

FILE NAME: H:\56427 N45 Oceana\Architecture\Planset\10-0863-007-A-601.dwg LAYOUT NAME: Layout1 PLOTTED: Monday, March 23, 2015 - 9:20am USER: devons

MECHANICAL LEGEND

SYMBOL	DESCRIPTION
18"x12"	DUCT (FIRST FIGURE SIDE SHOWN)
D	DROP IN DIRECTION OF ARROW
R	RISE IN DIRECTION OF ARROW
S D	SMOKE DETECTOR
	AIR MEASURING DEVICE
	SUPPLY AIR DIFFUSER
	RETURN AIR GRILLE
	EXHAUST AIR GRILLE
FD	FIRE DAMPER
S	SMOKE DAMPER
F/S	COMBINATION FIRE/SMOKE DAMPER
	MANUAL VOLUME DAMPER
	SQUARE TO ROUND DUCT TRANSITION
	FLEXIBLE CONNECTION
	DUCTWORK SOUND LINING, 1" THICK
AD	ACCESS DOOR
	DUCT TRANSITION
	RECTANGULAR BRANCH TAKE-OFF
	BELL MOUTH BRANCH TAKE-OFF
	ROUND BRANCH TAKE-OFF
	CIRCULAR AIR DIFFUSER
	CIRCULAR DUCT DROP OFF BOTTOM
	SUPPLY AIR DEVICE WITH 2'x2' LAY-IN PANEL
	RETURN AIR DEVICE WITH 2'x2' LAY-IN PANEL
T	THERMOSTAT, SPACE TEMP SENSOR
EOD	ELECTRIC OPERATED DAMPER
ø	DIAMETER
$	WALL-MOUNTED SWITCH
X	SHEET KEYNOTE

ABBREVIATIONS

@	AT
ABV	ABOVE
AD	ACCESS DOOR
AFF	ABOVE FINISHED FLOOR
APD	AIR PRESSURE DROP
APPROX	APPROXIMATELY
ATC	AUTOMATIC TEMPERATURE CONTROL
BDD	BACKDRAFT DAMPER
BHP	BRAKE HORSEPOWER
BLDG	BUILDING
BLW	BELOW
BTM	BOTTOM
BTU/HR	BRITISH THERMAL UNITS PER HOUR
CD	CONDENSATE DRAIN
CFM	CUBIC FEET PER MINUTE
CLG	COOLING
CONC	CONCRETE
CONN	CONNECT, CONNECTION
CONT'N	CONTINUATION
CU	CONDENSING UNIT
D	SUPPLY AIR DIFFUSER, OR DEEP, DEPTH
DB	DECIBEL OR DRY BULB
DIA, ø	DIAMETER
DL	DOOR LOUVER
DN	DOWN
DPR	DAMPER
DWG	DRAWING
EA	EXHAUST AIR
EAT	ENTERING AIR TEMPERATURE
EDB	ENTERING DRY BULB
EF	EXHAUST FAN
EOD	ELECTRIC OPERATED DAMPER
ESP	EXTERNAL STATIC PRESSURE
EXH	EXHAUST
EXP	EXPANSION
FL	FLOOR
FPM	FEET PER MINUTE
FPS	FEET PER SECOND
FT, '	FOOT, FEET
GPM	GALLONS PER MINUTE
H	HIGH, HEIGHT
H2O	WATER
HP	HEAT PUMP
HZ	HERTZ
IN, "	INCH, INCHES
KW	KILOWATTS
L	LONG, LENGTH
LAT	LEAVING AIR TEMPERATURE
LBS	POUNDS
LBS/HR	POUNDS PER HOUR
LDB	LEAVING DRY BULB
LF	LINEAR FEET
MBH	THOUSAND BRITISH THERMAL UNITS PER HOUR
MECH	MECHANICAL
MFR	MANUFACTURER
MIN	MINIMUM
MOD	MOTOR OPERATED DAMPER
MTD	MOUNTED
NC	NOISE CRITERIA OR NORMALLY CLOSED
NIC	NOT IN CONTRACT
No	NUMBER
OA	OUTDOOR AIR
OAT	OUTDOOR AIR TEMPERATURE
OC	ON CENTER
%	PERCENT
REQ'D	REQUIRED
RLA	RUNNING LOAD AMPERES
RM	ROOM
RPM	REVOLUTIONS PER MINUTE
RP	REFRIGERANT PIPING
RS	REFRIGERANT SUCTION
SF	SUPPLY FAN OR SQUARE FEET
S/M	SHEET METAL
SP	STATIC PRESSURE
SPEC	SPECIFICATION
SQ	SQUARE
SQ FT	DROP SQUARE FOOT
S/S	STAINLESS STEEL
STL	STEEL
TEMP, T	TEMPERATURE
TG	TRANSFER GRILLE
TSP	TOTAL STATIC PRESSURE
TYP	TYPICAL
V	VOLTS, VACUUM PIPE
VEL	VELOCITY
VIB	VIBRATION
W/	WITH
W/O	WITHOUT

GENERAL NOTES

1. GENERAL NOTES ON THIS DRAWING ARE APPLICABLE TO EACH DRAWING OF THIS SET. REFER TO DRAWINGS FOR SPECIFIC NOTES APPLICABLE TO EACH DRAWING.
2. CONTRACTOR SHALL THOROUGHLY REVIEW ALL MECHANICAL, ELECTRICAL, AND ARCHITECTURAL DRAWINGS, PRIOR TO ANY WORK BEING PERFORMED.
3. DRAWINGS DO NOT INDICATE ALL PIPING, ELECTRICAL CONDUITS, SUPPORTS, CABLE TRAYS OR STRUCTURAL ELEMENTS THAT ARE TYPICALLY BY OTHER TRADES. REVIEW DRAWINGS OF OTHER TRADES FOR INTERFERENCE OF WORK PRIOR TO INSTALLATION.
4. CONTRACTOR SHALL INSTALL EQUIPMENT IN ACCORDANCE WITH MANUFACTURER'S RECOMMENDATIONS.
5. IT IS THE INTENTION OF THE DRAWINGS TO COVER ALL WORK AND MATERIAL FOR A COMPLETE INSTALLATION. ANY EQUIPMENT, HARDWARE, AND/OR DEVICES NORMALLY UTILIZED FOR A COMPLETE INSTALLATION, THOUGH NOT SPECIFICALLY MENTIONED OR SHOWN ON THE DRAWINGS, SHALL BE FURNISHED AND INSTALLED BY THE CONTRACTOR AS PART OF HIS WORK.
6. ENTIRE INSTALLATION, INCLUDING MATERIALS, EQUIPMENT, AND WORKMANSHIP, SHALL CONFORM WITH ALL APPLICABLE LAWS, CODES, AND REGULATIONS OF MUNICIPAL, STATE, AND FEDERAL AUTHORITIES, THE LATEST EDITION OF THE STATE BUILDING CODES, AND OTHER REGULATORY BODIES HAVING JURISDICTION OVER THE CLASS OF WORK.
7. DUCTWORK AND PIPING ARRANGEMENTS ARE DIAGRAMMATIC.
8. ARRANGE PIPING AND DUCTWORK, AS REQUIRED, TO CLEAR STRUCTURE, DUCTS, CONDUITS, ETC. ALLOWING SPACE FOR PIPE HANGERS AND ACCESS TO VALVES, FILTERS, AND MAINTENANCE OF EQUIPMENT.
9. ALL WORK SHALL BE DONE IN ACCORDANCE WITH NATIONAL ELECTRICAL CODE, NFPA 70, SMACNA, NFPA 96A, AND UL 300.
10. PROVIDE ALL NECESSARY CONTACTORS, STARTERS, TRANSFORMERS, RELAYS, WIRING AND CONDUIT NECESSARY FOR COMPLETE OPERATIONAL HEATING, VENTILATING, AND COOLING SYSTEMS.
11. ALL DIMENSIONS AND PIPE SIZES ARE IN INCHES, UNLESS NOTED OTHERWISE.

DESIGN CRITERA

	DESIGN CONDITION
OUTSIDE AIR	SUMMER: 93.7 °F DB/76.7 °F WB
	WINTER: 20.4 °F DB
VAULT E-145	80 °F DB, COOLING; 55 °DB HEATING

SYM	DESCRIPTION	DATE	APPR

NAVFAC

Matthew J. Grice

COMMONWEALTH OF VIRGINIA
MATTHEW J. GRICE
Lic. No. 046036
PROFESSIONAL ENGINEER

SEAL

JOHNSON, MIRMIRAN THOMPSON
Gannett Fleming
A Joint Venture
272 Bendix Road, Suite 260
Virginia Beach, Virginia, 23452
Telephone: (757)499-1895
WEB: WWW.JMT.COM

A/E INFO

APPROVED

FOR COMMANDER NAVFAC

ACTIVITY

SATISFACTORY TO DATE

DES KC | DRW KC | CHK MJG

PM/DM

BRANCH MANAGER DRC

CHIEF ENG/ARCH

DEPARTMENT OF THE NAVY
NAVAL FACILITIES ENGINEERING COMMAND
NAVFAC MID-ATLANTIC
NORFOLK, VIRGINIA
HR IPT
NAVAL AIR STATION OCEANA
VIRGINIA BEACH, VIRGINIA
SPECIAL PROJECT RM10-9004
REPAIR RUNWAY 14L-32R PAVEMENT AND LIGHTING
MECHANICAL LEGEND, ABBREVIATIONS, AND NOTES

SCALE: NONE
EPROJECT NO.: 1312624
CONSTR. CONTR. NO.
NAVFAC DRAWING NO.
12690190
SHEET 179 OF 315
M-001

DRAWFORM REVISION: 10 MARCH 2009

FILE NAME: H:\56427 NAS Oceana\Mechanical\Planset\Task 007\10-0863-007-M-001.dwg LAYOUT NAME: M-001 PLOTTED: Monday, March 23, 2015 - 8:17am USER: kcheng

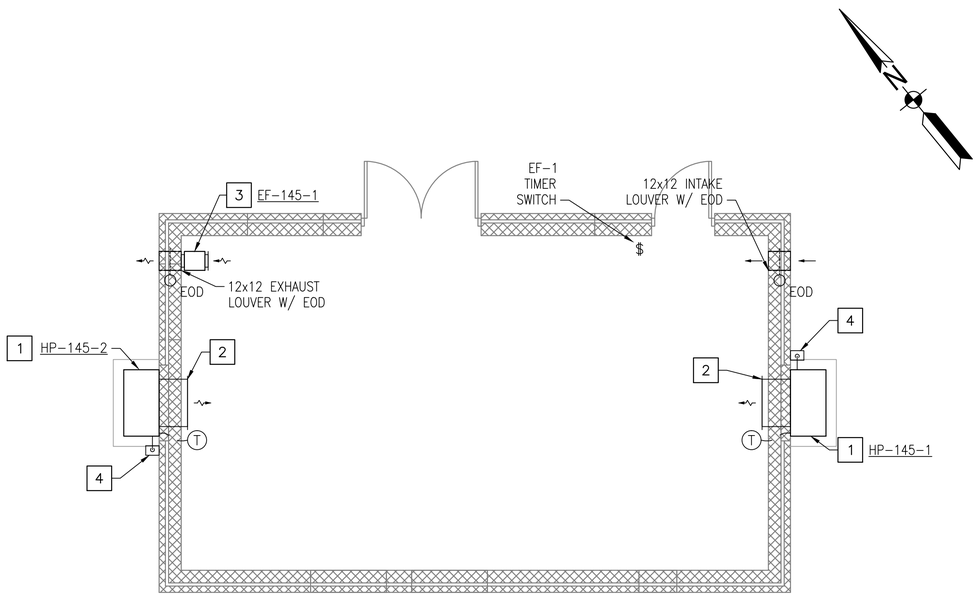

VAULT E-145 - MECHANICAL PLAN (1)

SCALE: 1/4" = 1'-0"

GENERAL SHEET NOTES

1. REFER TO DRAWING M-001 FOR LEGEND, ABBREVIATIONS, AND NOTES.
2. REFER TO ARCHITECTURAL, CIVIL, STRUCTURAL, AND ELECTRICAL DRAWINGS FOR ADDITIONAL WORK.
3. REFER TO DRAWING ED-401 FOR DEMOLITION WORK PLAN AND NOTES.
4. THE CONTRACTOR SHALL VERIFY ALL DIMENSIONS AND EXISTING CONDITIONS IN THE FIELD. SHOULD CONDITIONS BE DISCOVERED THAT PREVENT EXECUTION OF WORK AS INDICATED ON DRAWING, THE CONTRACTOR SHALL IMMEDIATELY NOTIFY THE ENGINEER IN WRITING AND AWAIT DIRECTION BEFORE PROCEEDING WITH THE WORK.
5. DAMAGE TO EXISTING FACILITIES AND EQUIPMENT SHALL BE REPAIRED OR REPLACED IMMEDIATELY BY THE CONTRACTOR AT NO ADDITIONAL COST TO THE OWNER.
6. REPAIR AND PATCH ANY DISTURBED AREAS TO MATCH EXISTING CONDITIONS.
7. PIPING ON THIS SHEET IS INTENDED TO BE DIAGRAMMATIC. COORDINATE WITH FIELD CONDITIONS FOR EXACT PIPE ROUTING. SEE MECHANICAL DETAILS ON DRAWING M-501 FOR CONNECTION DETAILS.
8. PIPING SHALL NOT BE INSTALLED ABOVE ELECTRICAL EQUIPMENT. SEE DRAWING E-402 FOR EQUIPMENT LOCATIONS.
9. REFER TO EQUIPMENT SCHEDULES ON DRAWING M-601 FOR MORE INFORMATION.

CONSTRUCTION KEYNOTES

1. PROVIDE WALL-MOUNTED PACKAGED HEAT PUMP UNIT. INSTALL 3 FEET ABOVE GRADE ON CONCRETE PEDESTAL. COORDINATE WITH STRUCTURAL DRAWINGS. SEE DETAIL 6 ON DRAWING M-501 FOR ADDITIONAL INFORMATION.
2. PROVIDE 30x10 SUPPLY AND 30x16 RETURN GRILLE.
3. SUPPORT EXHAUST FAN FROM STRUCTURE ABOVE. COORDINATE EXHAUST FAN HEIGHT WITH ARCHITECTURAL LOUVER HEIGHT. FAN SHALL BE CONTROLLED BY WALL-MOUNTED TIMER SWITCH.
4. PROVIDE SPLASH BLOCK AT GRADE FOR CONDENSATE PIPING. PIPING SHALL BE LINE SIZE OF EQUIPMENT OUTLET.

KEY MAP

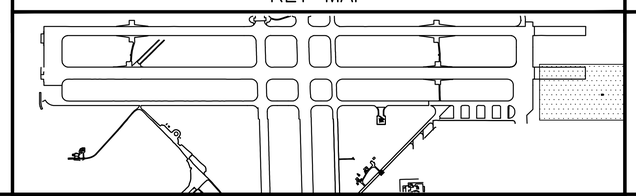

GRAPHIC SCALE

1/4"=1'-0" 1' 0 2' 4' 8'

SYM	DESCRIPTION	DATE	APPR

NAVFAC

Matthew J. Grice

COMMONWEALTH OF VIRGINIA
MATTHEW J. GRICE
Lic. No. 046036
PROFESSIONAL ENGINEER

SEAL

JOHNSON, MIRMIRAN THOMPSON
Gannett Fleming
A Joint Venture
272 Bendix Road, Suite 260
Virginia Beach, Virginia, 23452
Telephone: (757)499-1895
WEB: WWW.JMT.COM

A/E INFO

APPROVED

FOR COMMANDER NAVFAC

ACTIVITY

SATISFACTORY TO DATE

DES KC | DRW KC | CHK MJG

PM/DM

BRANCH MANAGER DRC

CHIEF ENG/ARCH

DEPARTMENT OF THE NAVY
NAVAL FACILITIES ENGINEERING COMMAND
NAVFAC MID-ATLANTIC
NORFOLK, VIRGINIA
HR IPT
NAVAL AIR STATION OCEANA
VIRGINIA BEACH, VIRGINIA
SPECIAL PROJECT RM10-9004
REPAIR RUNWAY 14L-32R PAVEMENT AND LIGHTING
VAULT E-145 - MECHANICAL PLAN

SCALE: 1/4" = 1'-0"
EPROJECT NO.: 1312624
CONSTR. CONTR. NO.
NAVFAC DRAWING NO. 12690191
SHEET 180 OF 315

M-401

DRAWFORM REVISION: 10 MARCH 2009

FILE NAME: H:\56427 NAS Oceana\Mechanical\Planset\Task 007\10-0863-007-M-401.dwg LAYOUT NAME: M-401 PLOTTED: Monday, March 23, 2015 - 8:21am USER: kcheng

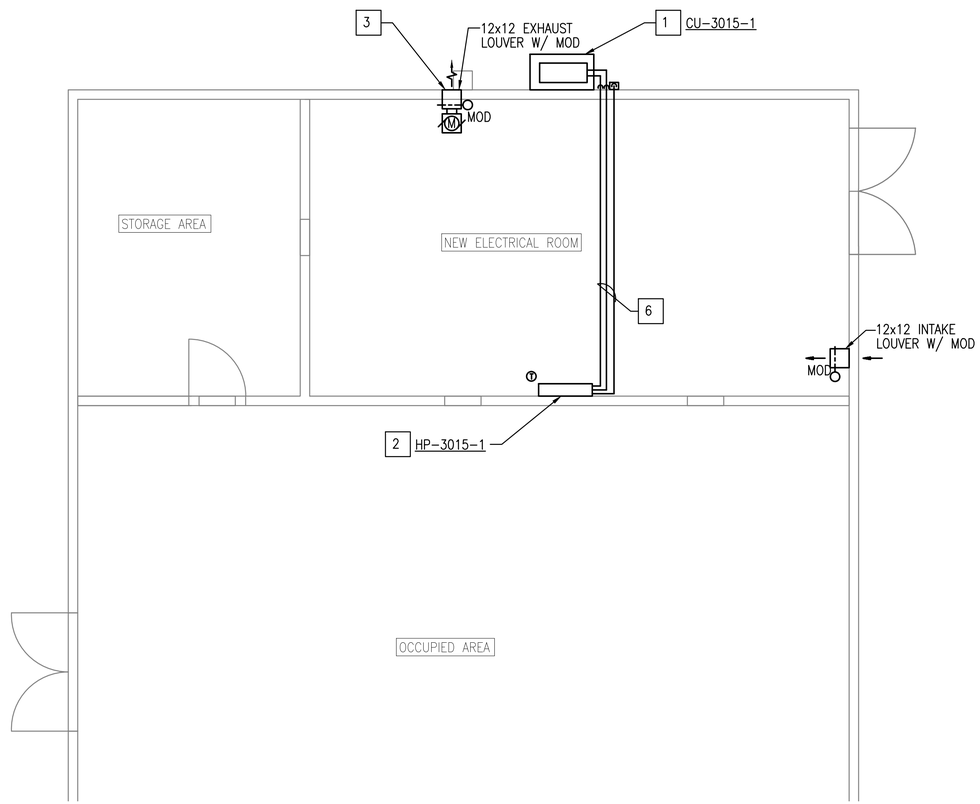

VAULT E-3015- MECHANICAL PLAN

SCALE: 1/4" = 1'-0"

GENERAL SHEET NOTES

1. REFER TO DRAWINGS M-001 FOR MECHANICAL LEGEND, ABBREVIATIONS AND NOTES.
2. REFER TO DRAWINGS M-501 AND E-609 FOR ADDITIONAL INFORMATION.
3. REFER TO ARCHITECTURAL, CIVIL, ELECTRICAL AND STRUCTURAL DRAWINGS FOR ADDITIONAL WORK.
4. REPAIR AND PATCH ANY DISTURBED AREAS TO MATCH EXISTING CONDITIONS.
5. UNLESS OTHERWISE NOTED, ALL MECHANICAL WORK AND MATERIALS ARE NEW AND SHALL BE PROVIDED BY THE ELECTRICAL CONTRACTOR.
6. REFER TO DRAWING E-601 FOR EQUIPMENT SCHEDULES.
7. DAMAGE TO EXISTING FACILITIES AND EQUIPMENT SHALL BE REPAIRED OR REPLACED IMMEDIATELY BY THE CONTRACTOR AT NO COST TO OWNER
8. PIPING ON THIS SHEET IS INTENDED TO BE DIAGRAMMATIC. COORDINATE WITH FIELD CONDITIONS FOR EXACT PIPE ROUTING. SEE MECHANICAL DETAILS ON DRAWING M-501 FOR CONNECTION DETAILS.
9. PIPING SHALL NOT BE INSTALLED ABOVE ELECTRICAL EQUIPMENT.

CONSTRUCTION KEYNOTES

1. INSTALL HEAT PUMP OUTDOOR UNIT ON MOUNTING RACKS PER MECHANICAL DETAIL 2 ON DRAWING M-501 AND SCHEDULE ON DRAWING E-609
2. PROVIDE DUCTLESS HEAT PUMP SPLIT SYSTEM INDOOR UNIT WITH PIPING AND CONTROLS. POWER IS SUPPLIED BY CONDENSER UNIT OUTSIDE. REFER TO DETAIL 1 THIS SHEET AND SCHEDULE ON DRAWING E-609 FOR MORE INFORMATION.
3. SUPPORT EXHAUST FAN FROM STRUCTURE ABOVE. COORDINATE EXHAUST FAN HEIGHT AND LOCATION WITH ARCHITECTURAL LOUVER HEIGHT AND CCR SWITCHGEAR DOOR. FAN SHALL BE CONTROLLED BY WALL TIMER SWITCH. INTERLOCK OPERATION OF EXHAUST AND INTAKE MODS WITH EXHAUST FAN OPERATION
4. PROVIDE SPLASH BLOCK AT GRADE FOR CONDENSATE PIPING
5. PROVIDE WIRING AND CONDUIT FROM CONDENSER UNIT TO HEAT PUMP UNIT PER MANUFACTURE'S RECOMMENDATIONS.
6. MECHANICAL PIPING FOR HVAC SPLIT UNIT SYSTEM REFER TO HEAT PUMP AND CONDENSER DETAILS FOR MORE PIPING INFORMATION. SIZE REFRIGERANT PIPING PER MANUFACTURE'S RECOMMENDATIONS AND INSULATE WITH FLEXIBLE ELASTOMERIC INSULATIONS. PROVIDE ALUMINUM JACKET FOR INSULATION EXPOSED TO DAY LIGHT.

SYM	DESCRIPTION	DATE	APPR

NAVFAC

Michael Sichel

COMMONWEALTH OF VIRGINIA
MICHAEL ALAN SICHEL
Lic. No. 047570
PROFESSIONAL ENGINEER

JOHNSON, MIRMIRAN THOMPSON
Gannett Fleming
A Joint Venture
272 Bendix Road, Suite 260
Virginia Beach, Virginia, 23452
Telephone: (757)499-1895
WEB: WWW.JMT.COM

A/E INFO

APPROVED
FOR COMMANDER NAVFAC
ACTIVITY
SATISFACTORY TO DATE

DES: SJM DRN: KAS CHK: MG
PM/DM
BRANCH MANAGER DRC
CHIEF ENG/ARCH

DEPARTMENT OF THE NAVY
NAVFAC MID-ATLANTIC
NAVAL FACILITIES ENGINEERING COMMAND
NORFOLK, VIRGINIA
HR IPT
NAVAL AIR STATION OCEANA
VIRGINIA BEACH, VIRGINIA
SPECIAL PROJECT RM10-9004
REPAIR RUNWAY 14L-32R PAVEMENT AND LIGHTING
VAULT E-3015 - MECHANICAL PLAN

SCALE: NOT TO SCALE
PROJECT NO. 1312624
CONSTR. CONTR. NO.
NAVFAC DRAWING NO. 12690192
SHEET 181 OF 315

M-402

DRAWFORM REVISION: 10 MARCH 2009

FILE NAME: Q:\SMD\100863_007_Repair_Runway_14L-32\CADD\ELECTRICAL-LIGHTING\10-0863-007-M-402.dwg LAYOUT NAME: M-402 VAULT E-3015 MECHANICAL PLAN PLOTTED: Monday, March 23, 2015 - 1:54pm USER: Rhurst

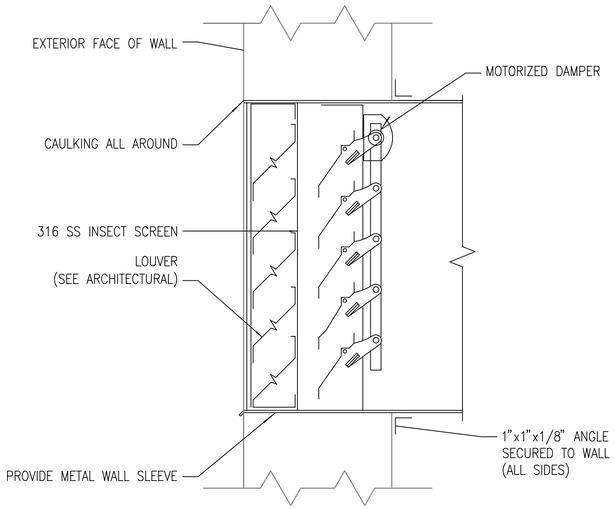

1. INTAKE LOUVERS SHALL BE PROVIDED AS STORM PROOF TYPE.

INTAKE/EXHAUST LOUVER DETAIL (1)

NTS

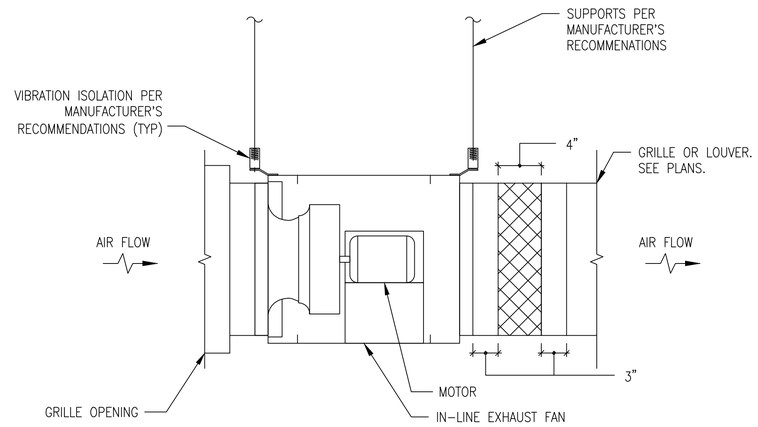

IN-LINE EXHAUST FAN DETAIL (2)

NTS

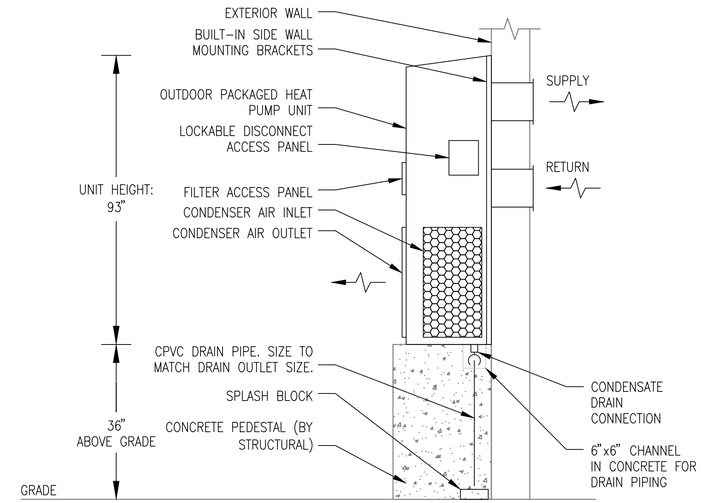

1. SEE MANUFACTURER'S INSTALLATION INSTRUCTIONS FOR ADDITIONAL INFORMATION.
2. COORDINATE INSTALLATION AND WALL OPENING WITH ARCHITECTURAL AND STRUCTURAL.
3. WEIGHT OF UNIT SHALL BE CARRIED BY 3-FOOT TALL CONCRETE PEDESTAL. SET UNIT ON CONCRETE PEDESTAL PRIOR TO FASTENING TO WALL. BOTTOM INSTALLATION BRACKET NOT REQUIRED.

PACKAGED HEAT PUMP DETAIL (3)

NTS

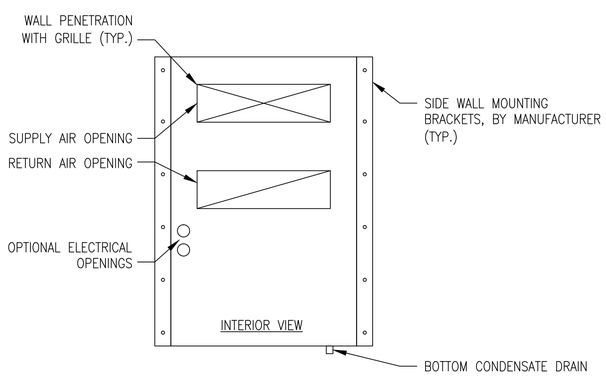

1. SEE MANUFACTURER'S INSTALLATION INSTRUCTIONS FOR ADDITIONAL INFORMATION.
2. COORDINATE INSTALLATION AND WALL OPENING WITH ARCHITECTURAL AND STRUCTURAL.
3. WEIGHT OF UNIT SHALL BE CARRIED BY 3-FOOT TALL CONCRETE PEDESTAL. SET UNIT ON CONCRETE PEDESTAL PRIOR TO FASTENING TO WALL. BOTTOM INSTALLATION BRACKET NOT REQUIRED.

PACKAGED HEAT PUMP MOUNTING DETAIL (4)

NTS

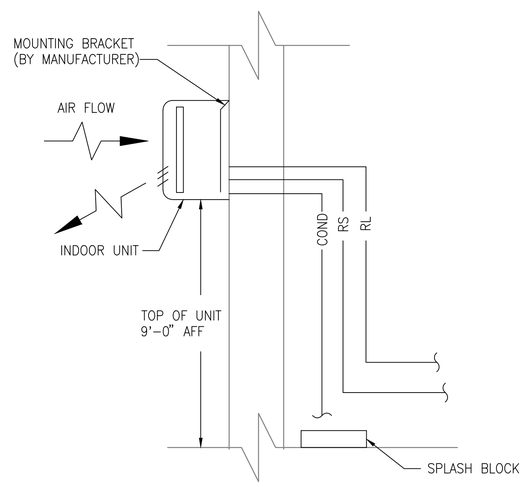

1. SEE MANUFACTURER'S INSTALLATION INSTRUCTIONS FOR MOUNTING AND REFRIGERANT PIPING DETAILS
2. REFER TO THIS SHEET FOR REFRIGERANT PIPE ROUTING.

HEAT PUMP INDOOR UNIT DETAIL (5)

SCALE: NONE

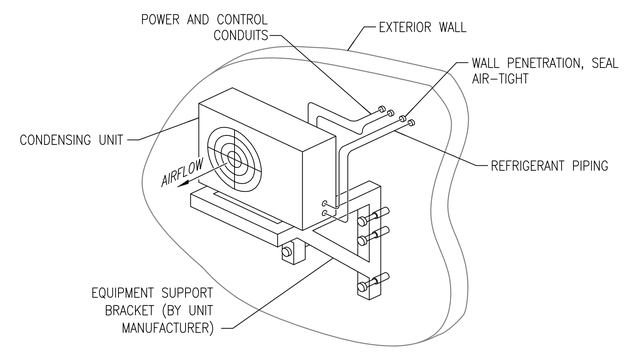

1. MOUNT UNIT 6" MINIMUM FROM MOUNTING WALL.
2. MOUNT TO WALL TO PROVIDE 3 FEET OF CLEARANCE FROM GRADE TO BOTTOM OF UNIT.
3. REFER TO MECHANICAL PLANS FOR GENERAL REFRIGERANT PIPE ROUTING.
4. PIPING SHALL BE INSULATED. SEE SPECIFICATIONS FOR MORE INFORMATION.

HEAT PUMP OUTDOOR UNIT DETAIL (6)

NTS

SYM	DESCRIPTION	DATE	APPR

NAVFAC

Matthew J. Grice
MATTHEW J. GRICE
Lic. No. 046036
COMMONWEALTH OF VIRGINIA
PROFESSIONAL ENGINEER
SEAL

JOHNSON, MIRMIRAN THOMPSON
Gannett Fleming
A Joint Venture
272 Bendix Road, Suite 260
Virginia Beach, Virginia, 23452
Telephone: (757)499-1895
WEB: WWW.JMT.COM

A/E INFO

APPROVED

FOR COMMANDER NAVFAC

ACTIVITY

SATISFACTORY TO DATE

DES KC DRW KC CHK MJG

PM/DM

BRANCH MANAGER DRC

CHIEF ENG/ARCH

DEPARTMENT OF THE NAVY
HR IPT
NAVAL FACILITIES ENGINEERING COMMAND
NAVFAC MID-ATLANTIC
NORFOLK, VIRGINIA
NAVAL AIR STATION OCEANA
VIRGINIA BEACH, VIRGINIA
SPECIAL PROJECT RM10-9004
REPAIR RUNWAY 14L-32R PAVEMENT AND LIGHTING
MECHANICAL DETAILS

SCALE: NOT TO SCALE
EPROJECT NO.: 1312624
CONSTR. CONTR. NO.
NAVFAC DRAWING NO.
12690193
SHEET 182 OF 315
M-501

DRAWFORM REVISION: 10 MARCH 2009

FILE NAME: H:\56427 NAS Oceana\Mechanical\Planset\Task 007\10-0863-007-M-501.dwg LAYOUT NAME: M-501 PLOTTED: Monday, March 23, 2015 - 8:22am USER: kcheng

SPLIT SYSTEM AIR-TO-AIR HEAT PUMP SCHEDULE

MARK	INDOOR UNIT											SETPOINTS		OUTDOOR UNIT											REMARKS
	FAN DATA					COIL PERFORMANCE												ELECTRICAL					MIN. SYSTEM EFFICIENCY		
				ELECTRICAL		COOLING			HEATING																
	TOTAL CFM	OA CFM	ESP (IN W.G.)	VOLT/PH	NEMA STARTER	TOTAL (MBH)	SENS. (MBH)	EAT (°FDB/°FWB)	DESIGN (MBH)	SUPP. HTG (KW)	EAT (°FDB)	COOLING DEG F	HEATING DEG F	NOMINAL TONS	NO. COMPRESSORS	STAGES	REFRIGERANT TYPE	VOLTS/PH	MCA	MOCP	FLA	C.O.P.	SEER	HSPF	
HP-3015-1 / CU-3015-1	403	0	–	208/1	4X	12.0	9.2	80	14.4	0	55	80	55	1.0	1	INVERTER	R-401A	208/1	8.75	15	3.9	4.4	23	12.5	1, 2, 3, 4, 5, 6

NOTES:
1. MINIMUM SEER/HSPF SHALL BE NO LESS THAN THE RECOMMENDED EFFICIENCY LISTED BY ENERGY STAR AND FEDERAL ENERGY MANAGEMENT PROGRAM (FEMP) FOR THE EQUIPEMENT LISTED. SEE WWW.EREN.DOE.GOV/FEMP/PROCUREMENT FOR REQUIREMENTS.
2. PROVIDE THERMOSTAT WITH LOCKABLE ENCLOSURE.
3. SYSTEM SHALL BE CONTROLLED BY INTEGRAL AUTOMATIC CONTROLS VIA WALL-MOUNTED WIRED CONTROLLER.
4. REFRIGERANT PIPING SHALL BE INSULATED.
5. PROVIDE MANUFACTURER'S REQUIRED EQUIPMENT CLEARANCES FOR UNITS.
6. PROVIDE OUTDOOR UNIT WITH MANUFACTURER WALL-MOUNTING BRACKET.

AIR-COOLED PACKAGED TERMINAL HEAT PUMP SCHEDULE

MARK	FAN DATA		COOLING			HEATING			SETPOINTS		ELECTRICAL				C.O.P.	MIN. SYSTEM EFFICIENCY	REFRIGERANT TYPE	REMARKS
	TOTAL CFM	OA CFM	TOTAL (MBH)	SENS. (MBH)	EAT (°FDB/°FWB)	DESIGN (MBH)	SUPP. HTG (KW)	EAT (°FDB)	COOLING DEG F	HEATING DEG F	VOLTS/PH	MCA	MOCP	FLA		EER		
HP-145-1	1,550	0	46.5	38.0	80	43.0	0	55	80	58	480/3	15	20	12.9	2.3	11.0	R-410A	1, 2, 3, 4, 5, 6, 7
HP-145-2	1,550	0	46.5	38.0	80	43.0	0	55	77	55	480/3	15	20	12.9	2.3	11.0	R-410A	1, 2, 3, 4, 5, 6, 7

NOTES:
1. MINIMUM SEER/HSPF SHALL BE NO LESS THAN THE RECOMMENDED EFFICIENCY LISTED BY ENERGY STAR AND FEDERAL ENERGY MANAGEMENT PROGRAM (FEMP) FOR THE EQUIPEMENT LISTED. SEE WWW.EREN.DOE.GOV/FEMP/PROCUREMENT FOR REQUIREMENTS.
2. PROVIDE THERMOSTAT WITH LOCKABLE ENCLOSURE.
3. SYSTEM SHALL BE CONTROLLED BY INTEGRAL AUTOMATIC CONTROLS VIA WALL-MOUNTED WIRED CONTROLLER.
4. PROVIDE MANUFACTURER'S REQUIRED EQUIPMENT CLEARANCES FOR UNITS.
5. PROVIDE OUTDOOR UNIT WITH MANUFACTURER WALL-MOUNTING BRACKET.
6. INSTALL OUTDOOR UNIT ON 3-FOOT TALL CONCRETE PEDESTAL (PROVIDED BY STRUCTURAL). SEE DETAIL ON DRAWING S-502 FOR ADDITIONAL INFORMATION.
7. PROVIDE UNIT WITH VARIABLE SPEED BLOWER MOTOR AND STAINLESS STEEL CABINET.

EXHAUST FAN SCHEDULE

MARK	AIRFLOW CFM	ESP (IN W.G.)	MOTOR DATA			NEMA STARTER	DRIVE TYPE	CONFIGURATION	DAMPER (BY FAN MFGR)		LOCATION	REMARKS
			HP	RPM	VOLT/PH				TYPE	SIZE		
EF-145-1	150	0.3	1/6	1725	120/1	4X	DIRECT	IN-LINE	EOD	12"x12"	VAULT E-145	1
EF-3015-1	50	0.3	1/6	1050	120/1	4X	DIRECT	IN-LINE	EOD	12"x12"	VAULT E-3015	1

NOTES:
1. PROVIDE WALL-MOUNTED TIMER SWITCH FOR FAN CONTROL.

SEQUENCES OF OPERATION

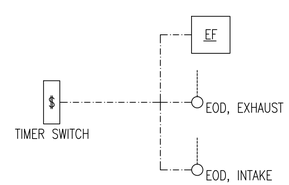

1. EXHAUST FAN

EXHAUST FANS SHALL PROVIDE NORMAL VENTILATION WHEN THE SPACE IS OCCUPIED AND SHALL ENERGIZE AND DE-ENERGIZE VIA A WALL-MOUNTED TIMER SWITCH. FANS SHALL PROVIDE VENTILATION AT A FIXED, NON-ADJUSTABLE SETTING. TIMER DURATION SHALL BE USER ADJUSTABLE.

INTAKE AND EXHAUST ELECTRIC OPERATED DAMPERS SHALL BE INTERLOCKED WITH THE ASSOCIATED EXHAUST FAN. DAMPERS SHALL OPEN WHEN THE ASSOCIATED EXHAUST FAN IS ENABLED. DAMPERS SHALL CLOSE WHEN THE ASSOCIATED EXHAUST FAN IS DISABLED. THE INTAKE AND EXHAUST DAMPERS SHALL BE PROVED OPEN THROUGH END SWITCHES PRIOR TO FAN STARTING.

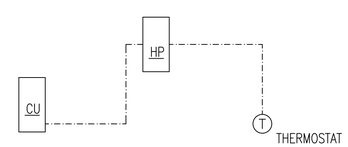

2. SPLIT SYSTEM HEAT PUMPS

EACH UNIT SHALL BE PROVIDED WITH A DEDICATED WALL-MOUNTED WIRED CONTROLLER. CONTROLS SHALL BE SET TO AUTOMATIC MODE. UNITS SHALL PROVIDE COOLING OR HEATING TO MAINTAIN AN ADJUSTABLE SPACE TEMPERATURE SETPOINT, AS DETERMINED BY THE UNIT'S CONTROLLER/THERMOSTAT.

REFER TO EQUIPMENT SCHEDULE FOR TEMPERATURE SETPOINTS. SETPOINT OFFSETS ARE INTENDED TO PROVIDE BASIC LEAD-LAG CONTROL.

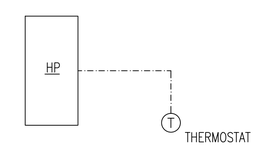

3. PACKAGED HEAT PUMPS

EACH UNIT SHALL BE PROVIDED WITH A DEDICATED WALL-MOUNTED THERMOSTAT. CONTROLS SHALL BE SET TO AUTOMATIC MODE. UNITS SHALL PROVIDE COOLING OR HEATING TO MAINTAIN AN ADJUSTABLE SPACE TEMPERATURE SETPOINT, AS DETERMINED BY THE UNIT'S CONTROLLER/THERMOSTAT.

REFER TO EQUIPMENT SCHEDULE FOR TEMPERATURE SETPOINTS. SETPOINT OFFSETS ARE INTENDED TO PROVIDE BASIC LEAD-LAG CONTROL.

APPR	DATE	DESCRIPTION	SYM

NAVFAC

Matthew Grice

COMMONWEALTH OF VIRGINIA
MATTHEW J. GRICE
Lic. No. 046036
PROFESSIONAL ENGINEER
SEAL

JOHNSON, MIRMIRAN THOMPSON
Gannett Fleming
A Joint Venture
272 Bendix Road, Suite 260
Virginia Beach, Virginia, 23452
Telephone: (757)499-1895
WEB: WWW.JMT.COM
A/E INFO

APPROVED
FOR COMMANDER NAVFAC
ACTIVITY
SATISFACTORY TO DATE
DES KC DRW KC CHK MJG
PM/DM
BRANCH MANAGER DRC
CHIEF ENG/ARCH

DEPARTMENT OF THE NAVY
NAVAL FACILITIES ENGINEERING COMMAND
NAVFAC MID-ATLANTIC
NORFOLK, VIRGINIA
HR IPT
NAVAL AIR STATION OCEANA
VIRGINIA BEACH, VIRGINIA
SPECIAL PROJECT RM10-9004
REPAIR RUNWAY 14L-32R PAVEMENT AND LIGHTING
MECHANICAL SCHEDULES AND CONTROLS

SCALE: NONE
EPROJECT NO.: 1312624
CONSTR. CONTR. NO.
NAVFAC DRAWING NO. 12690194
SHEET 183 OF 315
M-601
DRAWFORM REVISION: 10 MARCH 2009

FILE NAME: H:\56427 NAS Oceana\Mechanical\Planset\Task 0071\10-0863-007-M-601.dwg LAYOUT NAME: M-601 PLOTTED: Monday, March 23, 2015 - 8:25am USER: kcheng