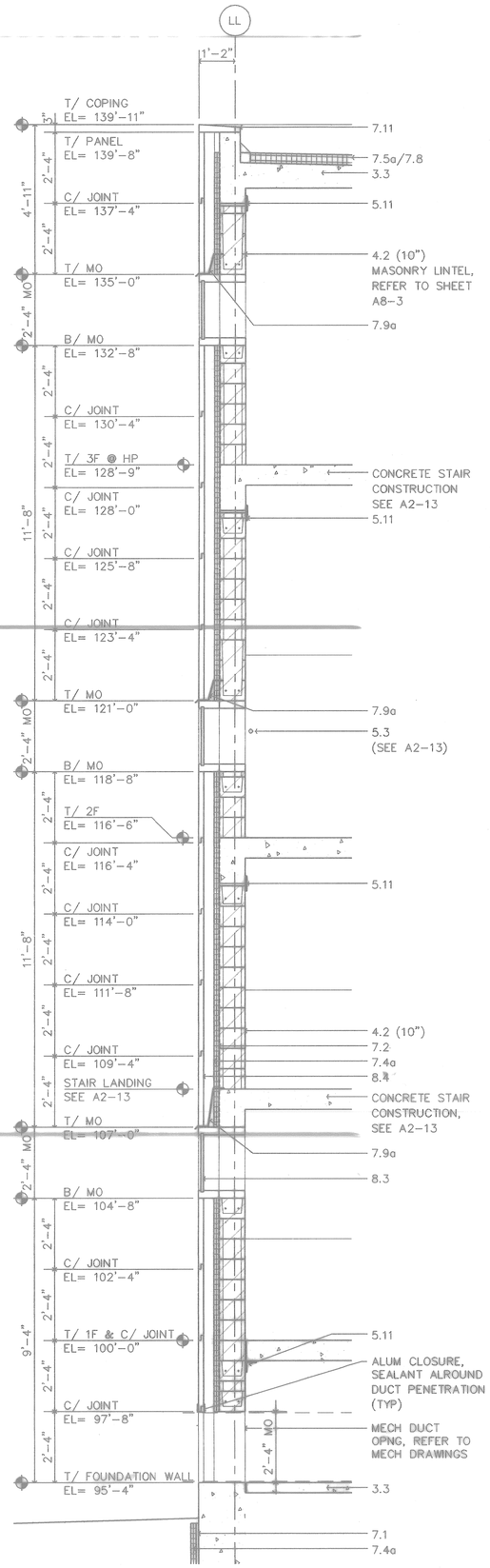


6 **WALL SECTION** (STAIR #1)
A4-6|A5-4 SCALE: 1/2"= 1'-0"

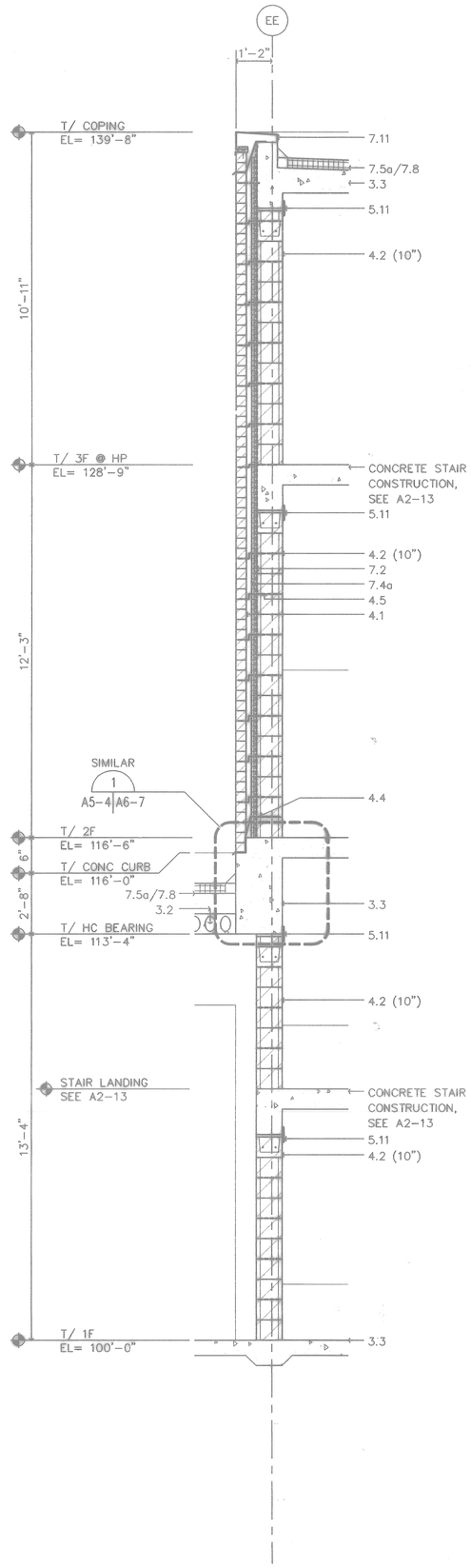


5 **WALL SECTION** (STAIR #2)
A4-6|A5-4 SCALE: 1/2"= 1'-0"

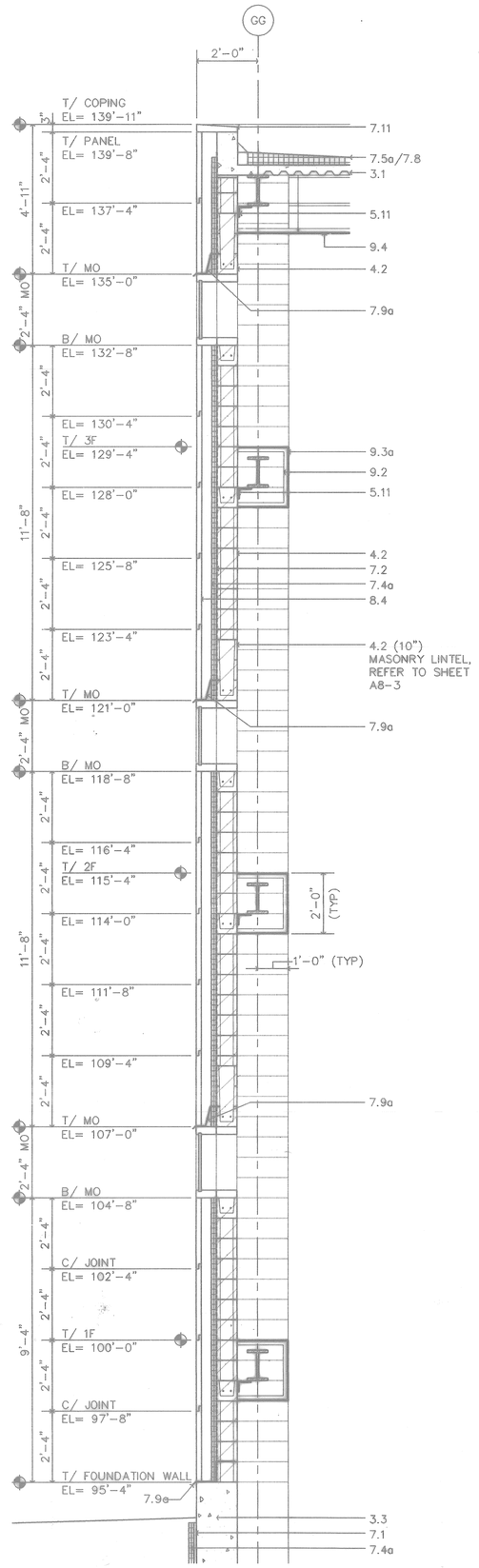


4 **WALL SECTION** (STAIR #3)
A4-6|A5-4 SCALE: 1/2"= 1'-0"

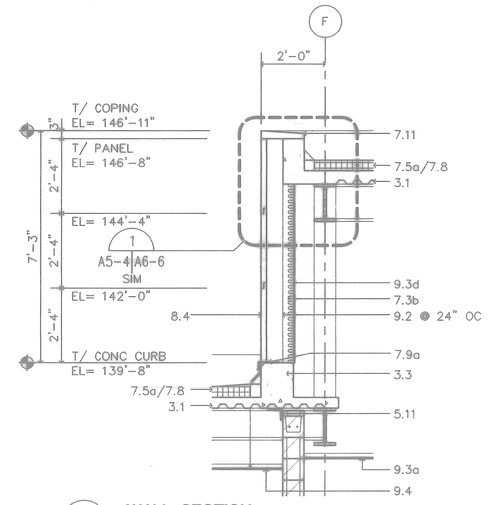


1 **WALL SECTION**
A4-6|A5-4 SCALE: 1/2"= 1'-0"

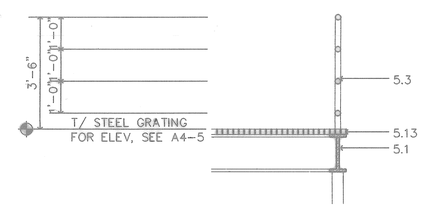


2 **WALL SECTION**
A4-5|A5-4 SCALE: 1/2"=,1'-0"

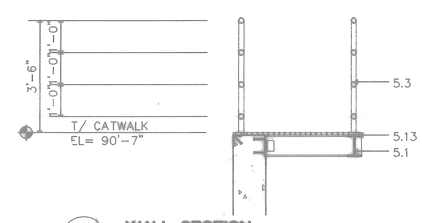


3 **WALL SECTION**
A4-6|A5-4 SCALE: 1/2"= 1'-0"

## MATERIAL LEGEND:

3 CONCRETE
3.1 CONCRETE SLAB OVER STEEL DECK
3.2 PRECAST CONCRETE SLAB WITH LIGHTWEIGHT CONCRETE TOPPING
3.3 CAST-IN-PLACE CONCRETE STRUCTURAL SYSTEM.

4 MASONRY
4.1 FACE BRICK 1/4 LAP RUNNING BOND
4.2 CONCRETE MASONRY UNITS (8" UNO)
4.3 CAST STONE COPING
4.4 THROUGH-WALL FLASHING
4.5 WALL TIES

5 METALS
5.1 STRUCTURAL STEEL, PAINTED (PRIMED WHERE CONCEALED)
5.2 PAINTED ARCHITECTURAL EXPOSED STEEL
5.3 PAINTED STEEL HANDRAILS/GUARDRAILS
5.4 EXPANSION JOINT COVER ASSEMBLY
5.5 ALUMINUM HANDRAIL
5.6 LADDER
5.7 SAFETY CHAIN
5.8 SAFETY NOSING @ CONCRETE TREAD
5.9 SAFETY TREAD
5.10 STEEL STAIRS
5.11 MISC STEEL (SEE SHEET A8-3)
5.12 PERFORATED METAL PANEL, PAINTED
5.13 METAL GRATING, PAINTED
5.14 ALUMINUM COLUMN ENCLOSURE

6 WOODS AND PLASTICS
6.1 TREATED WOOD BLOCKING

7 THERMAL AND MOISTURE PROTECTION
7.1 BENTONITE WATERPROOFING
7.2 DAMPPROOFING
7.3 MINERAL FIBER BLANKET THERMAL INSULATION
a. BLANKET BATTS (R-11) FOIL FACED
b. BLANKET BATTS (R-11)
c. SILL SEALER
7.4 BOARD BLOCK INSULATION
a. RIGID INSULATION (R-11)
b. VAPOR RETARDER
7.5 ROOF INSULATION
a. INSULATION BOARD, (MIN, R-20)
b. TAPERED ROOF INSULATION
c. INSULATION CANT
d. VAPOR RETARDER
7.6 NOT USED
7.7 FIRE STOPPING ON RETAINING CLIPS
7.8 MODIFIED BITUMEN SHEET ROOFING
7.9 FLASHING
a. STAINLESS STEEL FLASHING
b. ALUMINUM FLASHING
7.10 METAL REGLET
7.11 ALUMINUM COPING OR SILL
7.12 NOT USED
7.13 SEALANT
a. EXTERIOR SEALANT, 2 LINES W/ BACKSTOPS AT ALL LOCATIONS
b. INTERIOR SEALANT
c. FLOOR JOINT SEALANT

8 DOOR AND WINDOWS
8.1 ALUMINUM DOORS AND FRAMES
8.2 ROLLING SERVICE DOORS
8.3 GLAZED CURTAINWALL SYSTEM
a. CURTAINWALL SUPPORT SYSTEM
8.4 PREFORMED METAL WALL PANELS
8.5 HM DOOR AND FRAME

9 FINISHES
9.1 PORTLAND CEMENT-LIME PLASTER
9.2 METAL SUPPORT SYSTEM
9.3 GYPSUM BOARD
a. REGULAR
b. TYPE "X"
c. GYPSUM BACKING BOARD
d. GYPSUM BACKING BOARD, FOIL FACED
e. WATER RESISTANT GYPSUM BACKING BOARD.
f. CEMENTITIOUS BACKER UNITS
9.4 ACOUSTICAL CEILING

10 SPECIALITIES
10.1 METAL WALL LOUVERS W/ INSECT SCREEN
10.2 FLAGPOLE
10.3 LOUVER

11 EQUIPMENT
11.1 FIXED TYPE INDUSTRIAL DOCK LEVELER

12 FURNISHINGS
12.1 RECESSED FLOOR GRILLE AND FRAME
12.2 VENETIAN BLINDS

GRAPHIC SCALE
1' 0 1' 2' 3' 4' 5' 6' 7' 8'
SCALE 1/2" = 1'-0"

FOR OFFICIAL USE ONLY

RECORD DRAWING
DATE 06/08/98

DATE 07-31-97 STAT AS-BUILT, NO CORRECTIONS BY W.M.W.

STATE OF COLORADO
WILLIAM M. WHITMAN
B-1222
LICENSED ARCHITECT
ARCH. & ENGR. SEAL

Kirkham Architects Engineers Planners, Inc.
549 West Randolph Street
Chicago, IL 60661
Established in 1900
A Leading Edge Group Associates, Inc. Company
Copyright 1997 Kirkham Architects Engineers Planners, Inc.

DSGN WARD DR HSU CHK LORENZ
SUPV WHITMAN CH ENGR
SUBMITTED BY DATE 8/8/94
FOR NAVFAC/TLF
EIC DR HD
FPE DR

APPROVED DATE
OFFICER-IN-CHARGE
APPROVED DATE 9/12/94
CTD FOR COMMANDER, NAVFAC

DEPARTMENT OF THE NAVY — NAVAL FACILITIES ENGINEERING COMMAND
SOUTHERN DIVISION
CHARLESTON, S.C.

NAVAL TRAINING CENTER — GREAT LAKES, ILLINOIS

# DAMAGE CONTROL SCHOOL
# WALL SECTIONS

| SIZE | CODE IDENT NO. | NAVFAC DRAWING NO. | DRAWING NO. |
|---|---|---|---|
| F | 80091 | 5276489 | A5-4 |
| | | CONSTR CONTR NO. N62467-93-C-1143 | |
| SCALE 1/2"=1'-0" | | SPEC 06-93-1143 | SHEET 64 OF |

P: TR-BLCK PS tsw=0.0
P: TR-KNGT PS tsw=0.0
P: JAGSWR2 MS tsw=0.0
P: JAPAA504 PS tsw=0.0

Date&time: 08/24/94 12:10:53 User: AB Filename: P:\PAPER\JAPSA504

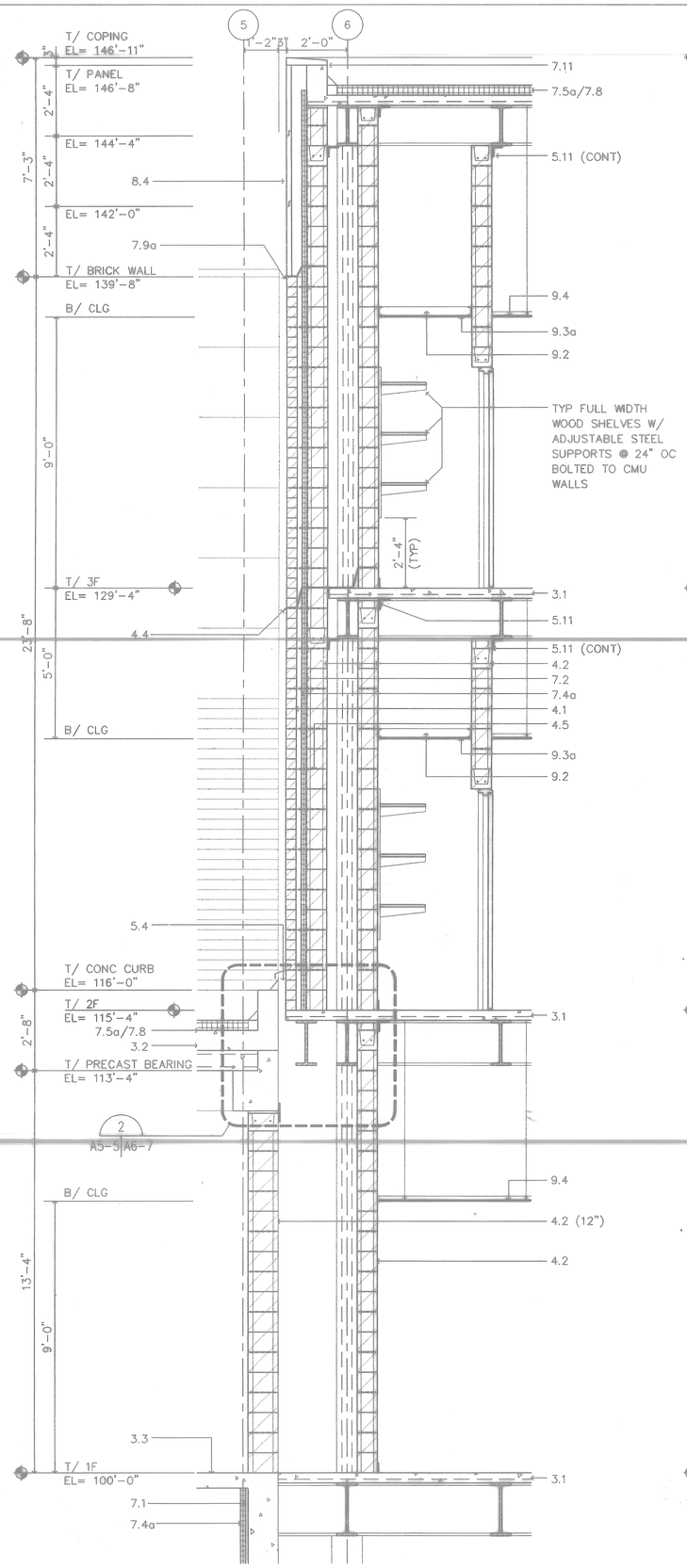


3 WALL SECTION
A4-5|A5-5 SCALE: 1/2"= 1'-0"

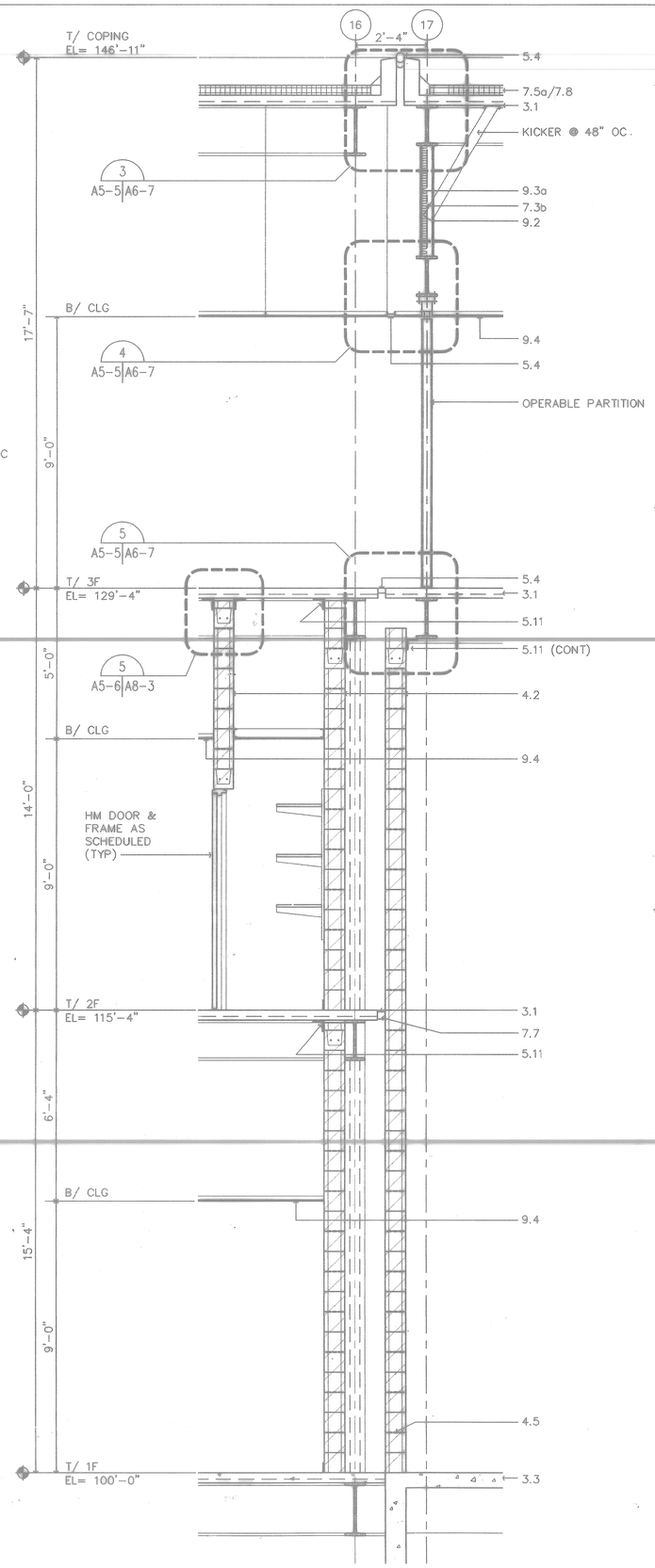


2 WALL SECTION
A4-5|A5-5 SCALE: 1/2"= 1'-0"

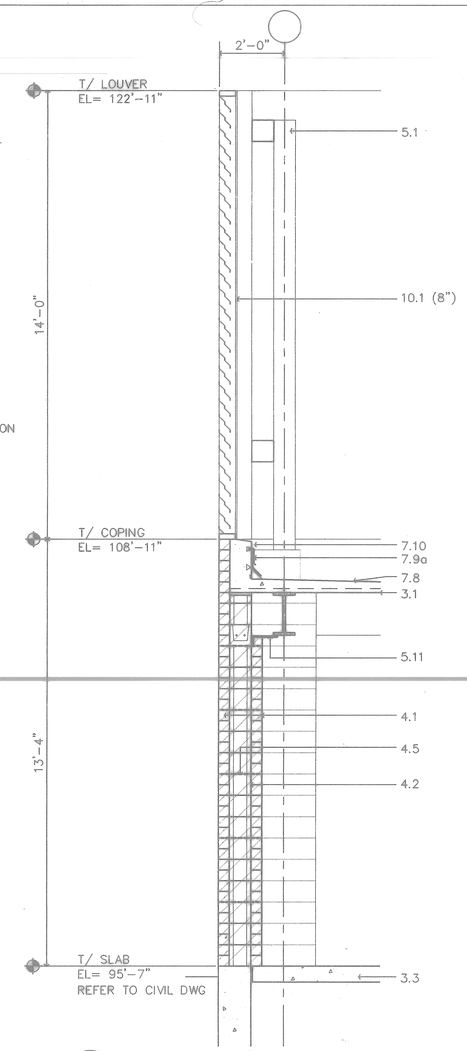


1 WALL SECTION
A4-6|A5-5 SCALE: 1/2"= 1'-0"

## MATERIAL LEGEND:

3 CONCRETE
3.1 CONCRETE SLAB OVER STEEL DECK
3.2 PRECAST CONCRETE SLAB WITH LIGHTWEIGHT CONCRETE TOPPING
3.3 CAST-IN-PLACE CONCRETE STRUCTURAL SYSTEM.

4 MASONRY
4.1 FACE BRICK 1/4 LAP RUNNING BOND
4.2 CONCRETE MASONRY UNITS (8" UNO)
4.3 CAST STONE COPING
4.4 THROUGH-WALL FLASHING
4.5 WALL TIES

5 METALS
5.1 STRUCTURAL STEEL, PAINTED (PRIMED WHERE CONCEALED)
5.2 PAINTED ARCHITECTURAL EXPOSED STEEL
5.3 PAINTED STEEL HANDRAILS/GUARDRAILS
5.4 EXPANSION JOINT COVER ASSEMBLY
5.5 ALUMINUM HANDRAIL
5.6 LADDER
5.7 SAFETY CHAIN
5.8 SAFETY NOSING @ CONCRETE TREAD
5.9 SAFETY TREAD
5.10 STEEL STAIRS
5.11 MISC STEEL (SEE SHEET A8-3)
5.12 PERFORATED METAL PANEL, PAINTED
5.13 METAL GRATING, PAINTED
5.14 ALUMINUM COLUMN ENCLOSURE

6 WOODS AND PLASTICS
6.1 TREATED WOOD BLOCKING

7 THERMAL AND MOISTURE PROTECTION
7.1 BENTONITE WATERPROOFING
7.2 DAMPPROOFING
7.3 MINERAL FIBER BLANKET THERMAL INSULATION
a. BLANKET BATTS (R-11) FOIL FACED
b. BLANKET BATTS (R-11)
c. SILL SEALER
7.4 BOARD BLOCK INSULATION
a. RIGID INSULATION (R-11)
b. VAPOR RETARDER
7.5 ROOF INSULATION
a. INSULATION BOARD, (MIN. R-20)
b. TAPERED ROOF INSULATION
c. INSULATION CANT
d. VAPOR RETARDER
7.6 NOT USED
7.7 FIRE STOPPING ON RETAINING CLIPS
7.8 MODIFIED BITUMEN SHEET ROOFING
7.9 FLASHING
a. STAINLESS STEEL FLASHING
b. ALUMINUM FLASHING
7.10 METAL REGLET
7.11 ALUMINUM COPING OR SILL
7.12 NOT USED
7.13 SEALANT
a. EXTERIOR SEALANT, 2 LINES W/ BACKSTOPS AT ALL LOCATIONS
b. INTERIOR SEALANT
c. FLOOR JOINT SEALANT

8 DOOR AND WINDOWS
8.1 ALUMINUM DOORS AND FRAMES
8.2 ROLLING SERVICE DOORS
8.3 GLAZED CURTAINWALL SYSTEM
a. CURTAINWALL SUPPORT SYSTEM
8.4 PREFORMED METAL WALL PANELS
8.5 HM DOOR AND FRAME

9 FINISHES
9.1 PORTLAND CEMENT-LIME PLASTER
9.2 METAL SUPPORT SYSTEM
9.3 GYPSUM BOARD
a. REGULAR
b. TYPE "X"
c. GYPSUM BACKING BOARD
d. GYPSUM BACKING BOARD, FOIL FACED
e. WATER RESISTANT GYPSUM BACKING BOARD.
f. CEMENTITIOUS BACKER UNITS
9.4 ACOUSTICAL CEILING

10 SPECIALITIES
10.1 METAL WALL LOUVERS W/ INSECT SCREEN
10.2 FLAGPOLE
10.3 LOUVER

11 EQUIPMENT
11.1 FIXED TYPE INDUSTRIAL DOCK LEVELER

12 FURNISHINGS
12.1 RECESSED FLOOR GRILLE AND FRAME
12.2 VENETIAN BLINDS

GRAPHIC SCALE
1' 0 1' 2' 3' 4' 5' 6' 7' 8'
SCALE 1/2" = 1'-0"

FOR OFFICIAL USE ONLY

RECORD DRAWING
DATE 06/03/98

DATE 07-31-97 STATUS AS-BUILT, NO CORRECTIONS BY ____ DATE ____

STATE OF COLORADO
WILLIAM M. WHITMAN
B-1222
LICENSED ARCHITECT
ARCH. & ENGR. SEAL

Knight Architects Engineers Planners, Inc.
549 West Randolph Street
Chicago, IL 60661
Established in 1948
A Leader in Knight & Associates, Inc. Company
©Copyright 1997 Knight Architects Engineers Planners, Inc.

DSGN WARD DR HSU CHK LORENZ
SUPV WHITMAN CH ENGR
SUBMITTED BY DATE
CNSL MGR/ENV/FIRE 8/31/94
EIC BR HD 8/30/94
FPE OHR
APPROVED DATE
OFFICER IN CHARGE
APPROVED DATE
CFD FOR CONSTRUCTION, NAVFAC 9/13/94

DEPARTMENT OF THE NAVY
NAVAL FACILITIES ENGINEERING COMMAND
SOUTHERN DIVISION
CHARLESTON, S.C.
NAVAL TRAINING CENTER
GREAT LAKES, ILLINOIS

# DAMAGE CONTROL SCHOOL
# WALL SECTIONS

| SIZE | CODE IDENT NO. | NAVFAC DRAWING NO. | DRAWING NO. |
|---|---|---|---|
| F | 80091 | 5276490 | A5-5 |
| SCALE 1/2"=1'-0" | | CONSTR CONTR NO. N62467-93-C-1143 | |
| | | SPEC 06-93-1143 | SHEET 65 OF |

Date&time: 08/24/94 11:43:40 User: AB Filename: P:\PAPER\JAPSA505

| | |
|---|---|
| P: TTL-BLOK PS | Inv=0.0 |
| P: TTL-INGT PS | Inv=0.0 |
| P: JAGSWI2 MS | Inv=0.0 |
| P: JAPSA505 PS | Inv=0.0 |

65

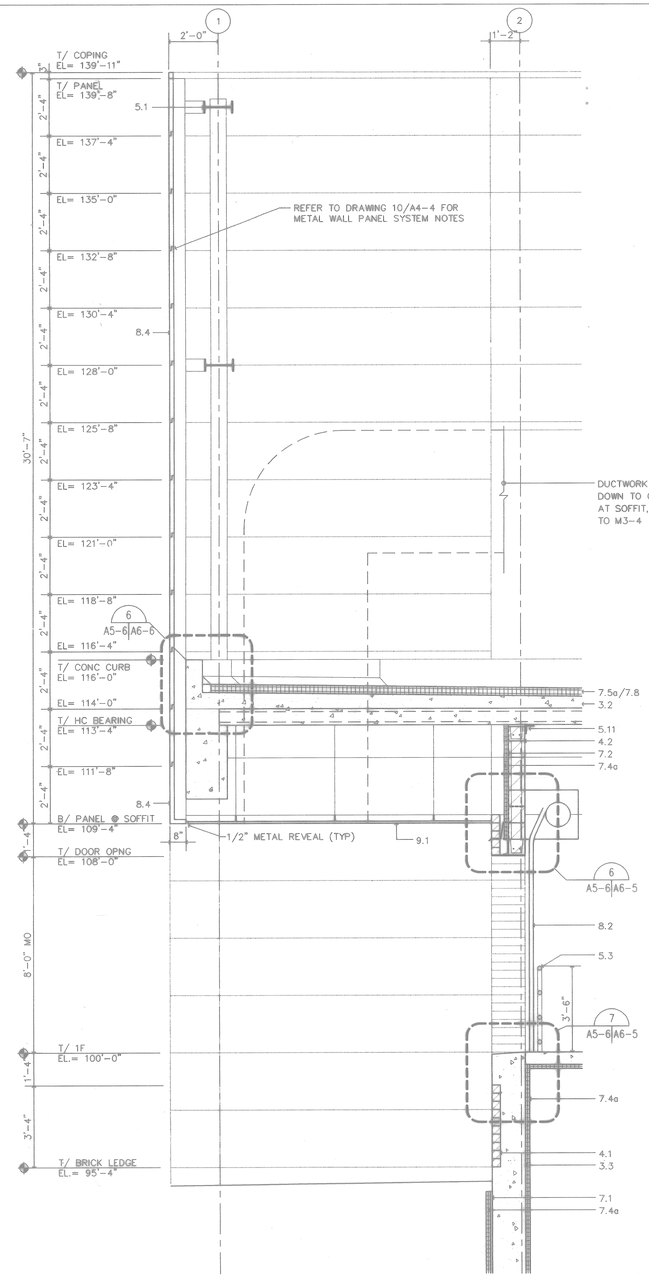


4 **WALL SECTION**
A4-5|A5-6 SCALE: 1/2"= 1'-0"

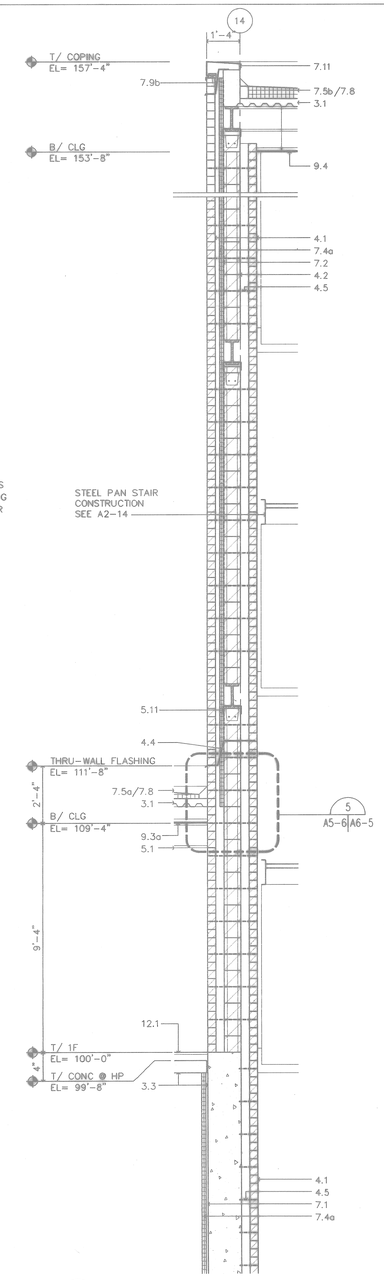


3 **WALL SECTION** (STAIR #4)
A4-6|A5-6 SCALE: 1/2"= 1'-0"

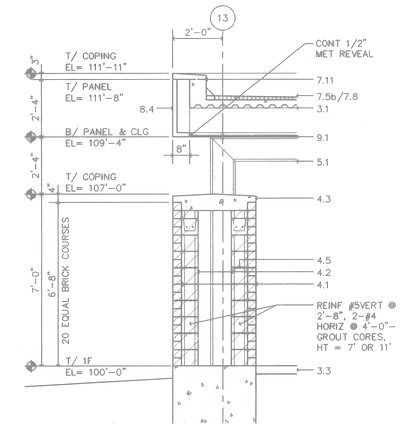


1 **WALL SECTION** (WEST ENTRANCE)
A4-6|A5-6 SCALE: 1/2"= 1'-0"

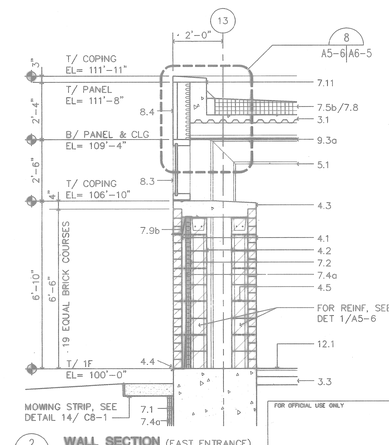


2 **WALL SECTION** (EAST ENTRANCE)
A4-6|A5-6 SCALE: 1/2"= 1'-0"

## MATERIAL LEGEND:

3 CONCRETE
3.1 CONCRETE SLAB OVER STEEL DECK
3.2 PRECAST CONCRETE SLAB WITH LIGHTWEIGHT CONCRETE TOPPING
3.3 CAST-IN-PLACE CONCRETE STRUCTURAL SYSTEM.

4 MASONRY
4.1 FACE BRICK 1/4 LAP RUNNING BOND
4.2 CONCRETE MASONRY UNITS (8" UNO)
4.3 CAST STONE COPING
4.4 THROUGH-WALL FLASHING
4.5 WALL TIES

5 METALS
5.1 STRUCTURAL STEEL, PAINTED (PRIMED WHERE CONCEALED)
5.2 PAINTED ARCHITECTURAL EXPOSED STEEL
5.3 PAINTED STEEL HANDRAILS/GUARDRAILS
5.4 EXPANSION JOINT COVER ASSEMBLY
5.5 ALUMINUM HANDRAIL
5.6 LADDER
5.7 SAFETY CHAIN
5.8 SAFETY NOSING @ CONCRETE TREAD
5.9 SAFETY TREAD
5.10 STEEL STAIRS
5.11 MISC STEEL (SEE SHEET A8-3)
5.12 PERFORATED METAL PANEL, PAINTED
5.13 METAL GRATING, PAINTED
5.14 ALUMINUM COLUMN ENCLOSURE

6 WOODS AND PLASTICS
6.1 TREATED WOOD BLOCKING

7 THERMAL AND MOISTURE PROTECTION
7.1 BENTONITE WATERPROOFING
7.2 DAMPPROOFING
7.3 MINERAL FIBER BLANKET THERMAL INSULATION
a. BLANKET BATTS (R-11) FOIL FACED
b. BLANKET BATTS (R-11)
c. SILL SEALER
7.4 BOARD BLOCK INSULATION
a. RIGID INSULATION (R-11)
b. VAPOR RETARDER
7.5 ROOF INSULATION
a. INSULATION BOARD, (MIN. R-20)
b. TAPERED ROOF INSULATION
c. INSULATION CANT
d. VAPOR RETARDER
7.6 NOT USED
7.7 FIRE STOPPING ON RETAINING CLIPS
7.8 MODIFIED BITUMEN SHEET ROOFING
7.9 FLASHING
a. STAINLESS STEEL FLASHING
b. ALUMINUM FLASHING
7.10 METAL REGLET
7.11 ALUMINUM COPING OR SILL
7.12 NOT USED
7.13 SEALANT
a. EXTERIOR SEALANT, 2 LINES W/ BACKSTOPS AT ALL LOCATIONS
b. INTERIOR SEALANT
c. FLOOR JOINT SEALANT

8 DOOR AND WINDOWS
8.1 ALUMINUM DOORS AND FRAMES
8.2 ROLLING SERVICE DOORS
8.3 GLAZED CURTAINWALL SYSTEM
a. CURTAINWALL SUPPORT SYSTEM
8.4 PREFORMED METAL WALL PANELS
8.5 HM DOOR AND FRAME

9 FINISHES
9.1 PORTLAND CEMENT-LIME PLASTER
9.2 METAL SUPPORT SYSTEM
9.3 GYPSUM BOARD
a. REGULAR
b. TYPE "X"
c. GYPSUM BACKING BOARD
d. GYPSUM BACKING BOARD, FOIL FACED
e. WATER RESISTANT GYPSUM BACKING BOARD.
f. CEMENTITIOUS BACKER UNITS
9.4 ACOUSTICAL CEILING

10 SPECIALITIES
10.1 METAL WALL LOUVERS W/ INSECT SCREEN
10.2 FLAGPOLE
10.3 LOUVER

11 EQUIPMENT
11.1 FIXED TYPE INDUSTRIAL DOCK LEVELER

12 FURNISHINGS
12.1 RECESSED FLOOR GRILLE AND FRAME
12.2 VENETIAN BLINDS

GRAPHIC SCALE
1' 0 1' 2' 3' 4' 5' 6' 7' 8'
SCALE 1/2" = 1'-0"

FOR OFFICIAL USE ONLY

RECORD DRAWING
DATE 06/06/98

| | | | |
|---|---|---|---|
| 5 TS-6/DF | 8/24/94 | B. Hsieh | S.O. |
| 4 TS-6/DF | 8/24/94 | B. Hsieh | S.O. |
| 3 TS-6/DF | 8/24/94 | B. Hsieh | S.O. |
| 2 TS-6/DF | 8/24/94 | B. Hsieh | S.O. |
| 1 TS-6/DF | 8/24/94 | B. Hsieh | S.O. |

Date&time: 08/23/94 11:59:20 User: DM Filename: P:\PAPER\JAFS\A506

99

STATE OF COLORADO
WILLIAM M. WHITMAN
B-1222
LICENSED ARCHITECT
ARCH. & ENGR. SEAL

-- DATE 07-31-97 SPEC A5-SUBLT, HO CORRECTIONS BY _____ APPR. N.E.W.

KOBB ARCHITECT ENGINEERS Planners, Inc.
Prof. Bldg. Kingsbury Street
Chicago, IL 60657
A JOINT VENTURE
A JOINT VENTURE of associates, Inc. Company
LOCKWOOD GREENE Engineers Support Planners, Inc.

DEPARTMENT OF THE NAVY
NAVAL FACILITIES ENGINEERING COMMAND
SOUTHERN DIVISION
CHARLESTON, S.C.

NAVAL TRAINING CENTER GREAT LAKES, ILLINOIS

DRAWN WARD CK. HSU DWN. LORENZ
SUPV. WHITMAN CH. ENGR.
SUBMITTED BY DATE
EC DR. NO.
FFE DWR.
APPROVED DATE

# DAMAGE CONTROL SCHOOL
# WALL SECTIONS

| SIZE | CODE IDENT NO. | NAVFAC DRAWING NO. | DRAWING NO. |
|---|---|---|---|
| F | 80091 | 5276491 | A5-6 |
| SCALE 1/2"=1'-0" | | CONSTR CONTR NO. N62467-93-C-1143 | |
| | | SPEC 06-93-1143 | SHEET 66 OF |

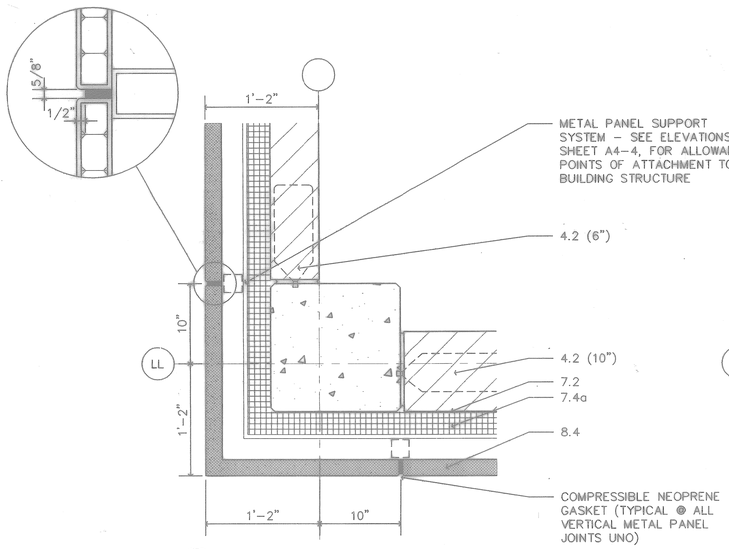


7 / A2-1 A6-1 A2-2 A2-3 **CORNER DETAIL @ TYP MTL WALL PANEL**
SCALE: 1-1/2"= 1'-0"

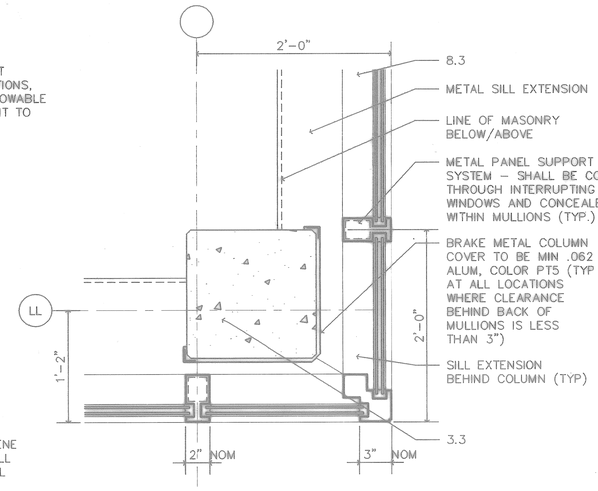


4 / A2-1 A6-1 A2-2 **CORNER DETAIL @ TYP WINDOW**
SCALE: 1-1/2"= 1'-0"

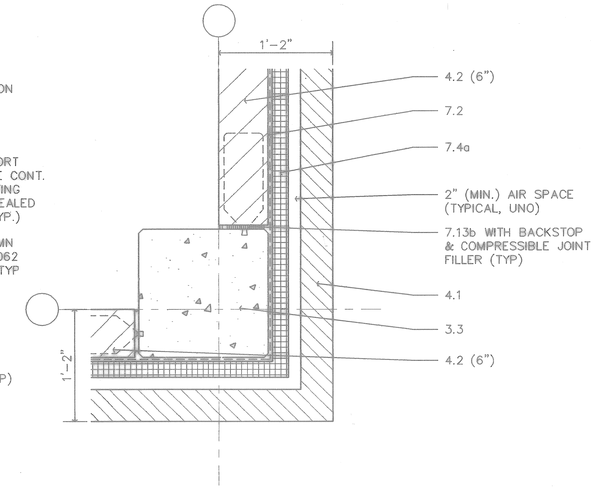


1 / A2-1 A6-1 A2-2 A2-3 **CORNER DETAIL @ TYP MASONRY**
SCALE: 1-1/2"= 1'-0"

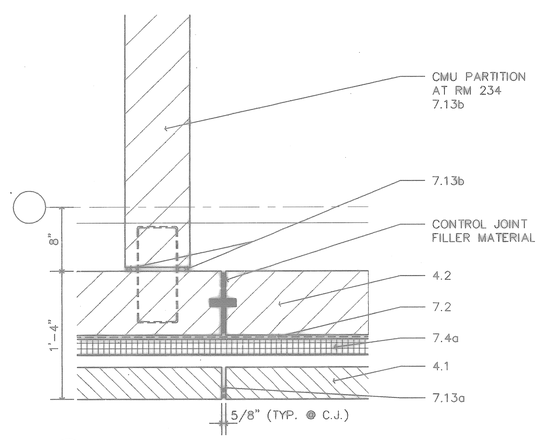


8 / A2-5 A6-1 A2-6 **PLAN DETAIL @ CONTROL JOINT**
SCALE: 1-1/2"= 1'-0"

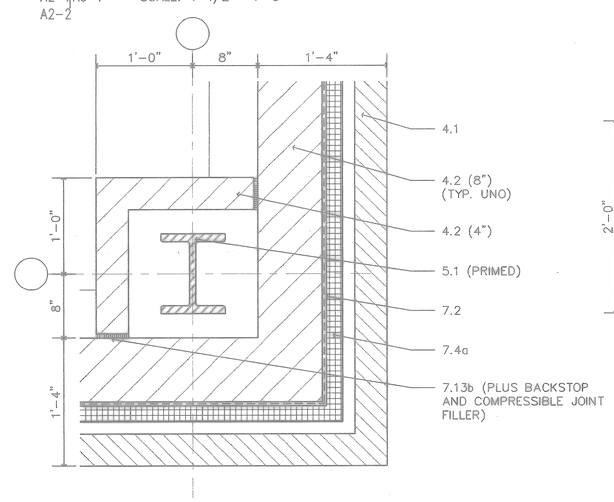


5 / A2-5 A6-1 A2-6 **PLAN DETAIL @ TYP STL COL ENCLOSURE**
SCALE: 1-1/2"= 1'-0"

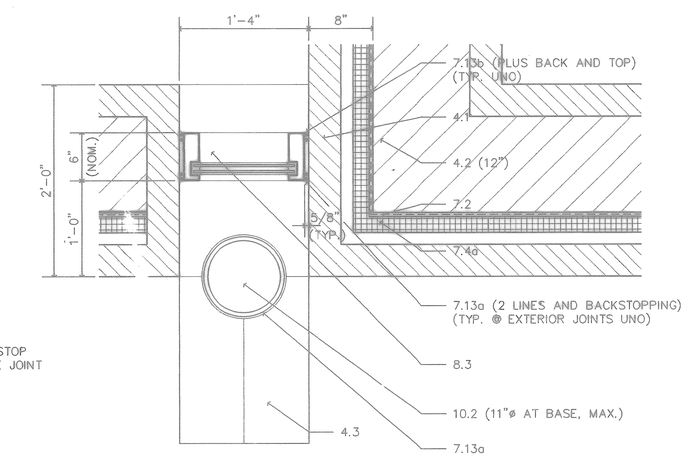


2 / A2-5 A6-1 **PLAN DETAIL @ WINDOW IN STAIR #4**
SCALE: 1-1/2"= 1'-0"

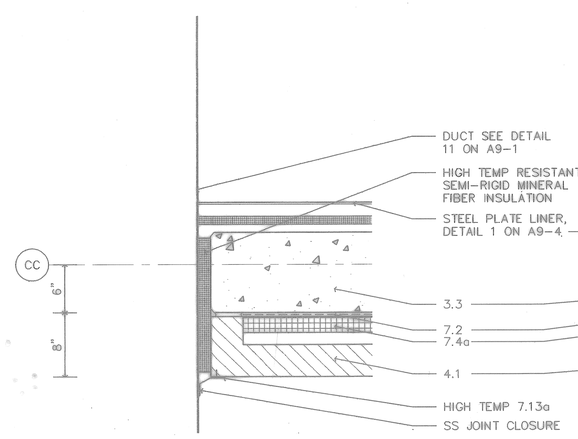


6 / A2-2 A6-1 **PLAN DETAIL @ DUCT PENETRATION**
SCALE: 1-1/2"= 1'-0"

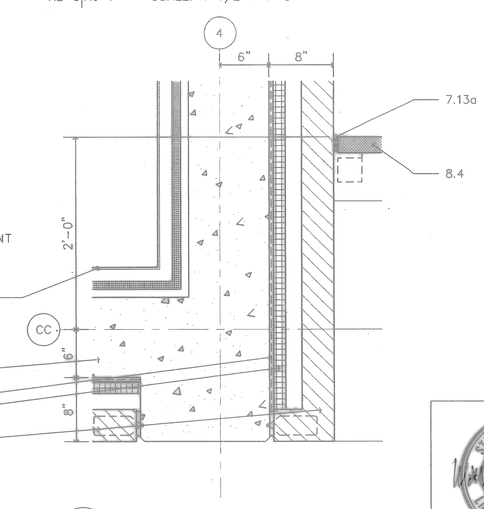


3 / A2-2 A6-1 **PLAN DETAIL: ABOVE PIT**
SCALE: 1-1/2"= 1'-0"

## MATERIAL LEGEND:

3 CONCRETE
3.1 CONCRETE SLAB OVER STEEL DECK
3.2 PRECAST CONCRETE SLAB WITH LIGHTWEIGHT CONCRETE TOPPING
3.3 CAST-IN-PLACE CONCRETE STRUCTURAL SYSTEM.

4 MASONRY
4.1 FACE BRICK 1/4 LAP RUNNING BOND
4.2 CONCRETE MASONRY UNITS (8" UNO)
4.3 CAST STONE COPING
4.4 THROUGH-WALL FLASHING
4.5 WALL TIES

5 METALS
5.1 STRUCTURAL STEEL, PAINTED (PRIMED WHERE CONCEALED)
5.2 PAINTED ARCHITECTURAL EXPOSED STEEL
5.3 PAINTED STEEL HANDRAILS/GUARDRAILS
5.4 EXPANSION JOINT COVER ASSEMBLY
5.5 ALUMINUM HANDRAIL
5.6 LADDER
5.7 SAFETY CHAIN
5.8 SAFETY NOSING @ CONCRETE TREAD
5.9 SAFETY TREAD
5.10 STEEL STAIRS
5.11 MISC STEEL (SEE SHEET A8-3)
5.12 PERFORATED METAL PANEL, PAINTED
5.13 METAL GRATING, PAINTED
5.14 ALUMINUM COLUMN ENCLOSURE

6 WOODS AND PLASTICS
6.1 TREATED WOOD BLOCKING

7 THERMAL AND MOISTURE PROTECTION
7.1 BENTONITE WATERPROOFING
7.2 DAMPPROOFING
7.3 MINERAL FIBER BLANKET THERMAL INSULATION
a. BLANKET BATTS (R-11) FOIL FACED
b. BLANKET BATTS (R-11)
c. SILL SEALER
7.4 BOARD BLOCK INSULATION
a. RIGID INSULATION (R-11)
b. VAPOR RETARDER
7.5 ROOF INSULATION
a. INSULATION BOARD, (MIN, R-20)
b. TAPERED ROOF INSULATION
c. INSULATION CANT
d. VAPOR RETARDER
7.6 NOT USED
7.7 FIRE STOPPING ON RETAINING CLIPS
7.8 MODIFIED BITUMEN SHEET ROOFING
7.9 FLASHING
a. STAINLESS STEEL FLASHING
b. ALUMINUM FLASHING
7.10 METAL REGLET
7.11 ALUMINUM COPING OR SILL
7.12 NOT USED
7.13 SEALANT
a. EXTERIOR SEALANT, 2 LINES W/ BACKSTOPS AT ALL LOCATIONS
b. INTERIOR SEALANT
c. FLOOR JOINT SEALANT

8 DOOR AND WINDOWS
8.1 ALUMINUM DOORS AND FRAMES
8.2 ROLLING SERVICE DOORS
8.3 GLAZED CURTAINWALL SYSTEM
a. CURTAINWALL SUPPORT SYSTEM
8.4 PREFORMED METAL WALL PANELS
8.5 HM DOOR AND FRAME

9 FINISHES
9.1 PORTLAND CEMENT-LIME PLASTER
9.2 METAL SUPPORT SYSTEM
9.3 GYPSUM BOARD
a. REGULAR
b. TYPE "X"
c. GYPSUM BACKING BOARD
d. GYPSUM BACKING BOARD, FOIL FACED
e. WATER RESISTANT GYPSUM BACKING BOARD
f. CEMENTITIOUS BACKER UNITS
9.4 ACOUSTICAL CEILING

10 SPECIALITIES
10.1 METAL WALL LOUVERS W/ INSECT SCREEN
10.2 FLAGPOLE
10.3 LOUVER

11 EQUIPMENT
11.1 FIXED TYPE INDUSTRIAL DOCK LEVELER

12 FURNISHINGS
12.1 RECESSED FLOOR GRILLE AND FRAME
12.2 VENETIAN BLINDS

GRAPHIC SCALE
1' 9" 6" 3" 0" 1' 2'
SCALE 1-1/2" = 1'-0"

FOR OFFICIAL USE ONLY

RECORD DRAWING
DATE 06/08/98

DATE 07-31-97 SYMB AS-BUILT, NO CORRECTIONS BY ____ SYTM. ____ N.A.W.

Knight Architects Engineers Planners, Inc.
549 West Randolph Street
Chicago, IL 60661
Established in 1949
A Leader in Knight & Associates, Inc. Company
Copyright 1997 Knight Architects Engineers Planners, Inc.

DSGN WARD DR HSU CHK LORENZ
SUPV WHITMAN CH ENGR
SUBMITTED BY DATE 8/21/97
FPM MEMBER
EIC BR HEAD
FPE DR
APPROVED DATE
OFFICER IN CHARGE
APPROVED DATE 9/13/97
CTO FOR COMMANDER, NAVFAC

STATE OF COLORADO WILLIAM M. WHITMAN B-1222 LICENSED ARCHITECT
ARCH. & ENGR. SEAL

DEPARTMENT OF THE NAVY
NAVAL FACILITIES ENGINEERING COMMAND
SOUTHERN DIVISION
CHARLESTON, S.C.
NAVAL TRAINING CENTER GREAT LAKES, ILLINOIS

**DAMAGE CONTROL SCHOOL**
**EXTERIOR WALL DETAILS**

| SIZE | CODE IDENT NO. | NAVFAC DRAWING NO. | DRAWING NO. |
|---|---|---|---|
| F | 80091 | 5276492 | A6-1 |
| SCALE 1-1/2"= 1'-0" | SPEC 06-93-1143 | CONSTR CONTR NO. N62467-93-C-1143 | SHEET 67 OF |

P: TTL_BLOCK PS lineweight=0.0
P: A_TITLEBLK PS lineweight=0.0
P: JAPSA601 PS lineweight=0.0
P: JAGDE602 MS lineweight=0.0
P: JAGDEW72 MS lineweight=0.0

Datetime: 08/25/94 08:33:48 User: AB Filename: P:\PAPER\JAPSA601

19

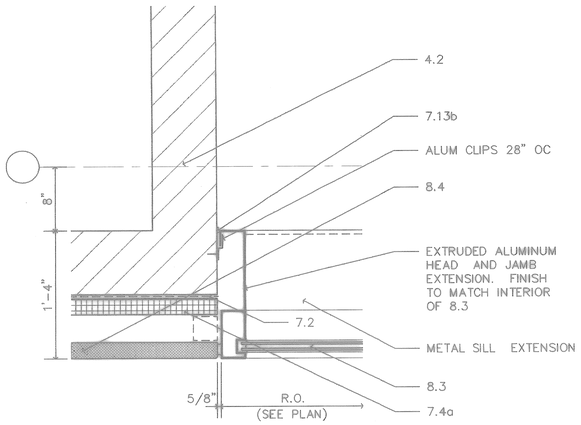


7 TYP PLAN DETAIL @ WINDOW JAMB
A2-6|A6-2 A2-7 SCALE: 1-1/2"= 1'-0"

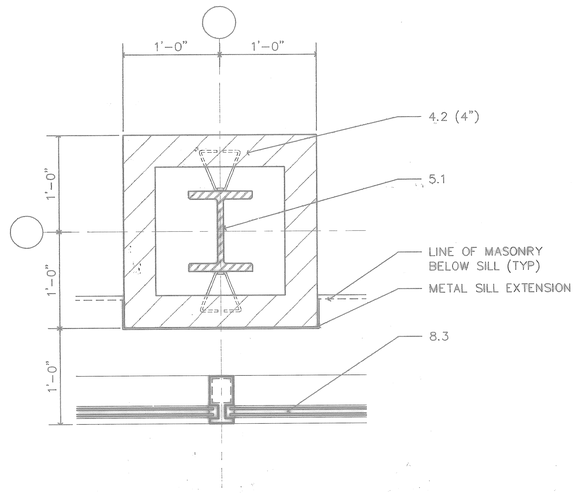


4 TYP PLAN DETAIL @ CMU COL ENCLOSURE
A2-5|A6-2 A2-6 A2-7 SCALE: 1-1/2"= 1'-0"

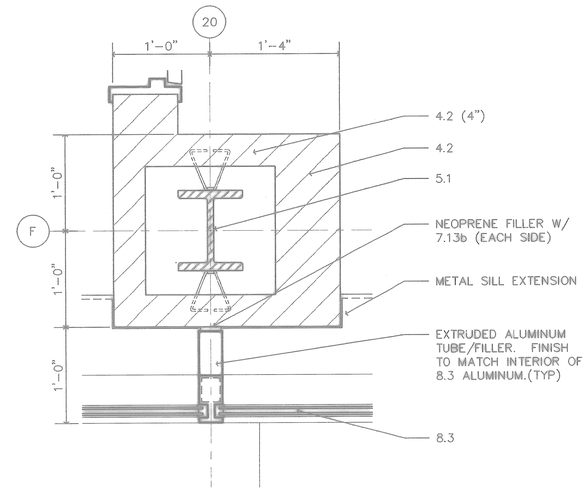


1 PLAN DETAIL
A2-7|A6-2 SCALE: 1-1/2"= 1'-0"

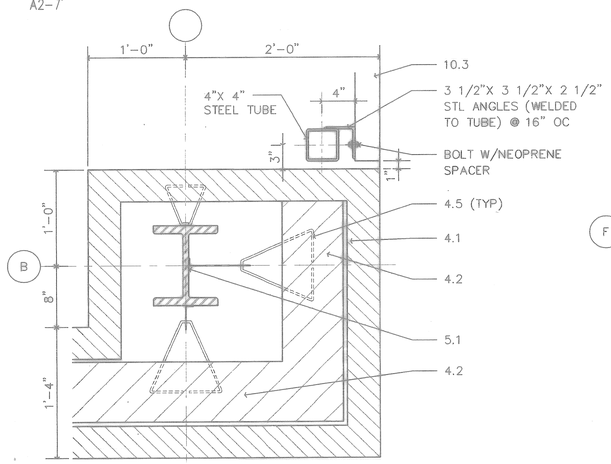


8 PLAN DETAIL
A2-5|A6-2 SCALE: 1-1/2"= 1'-0"

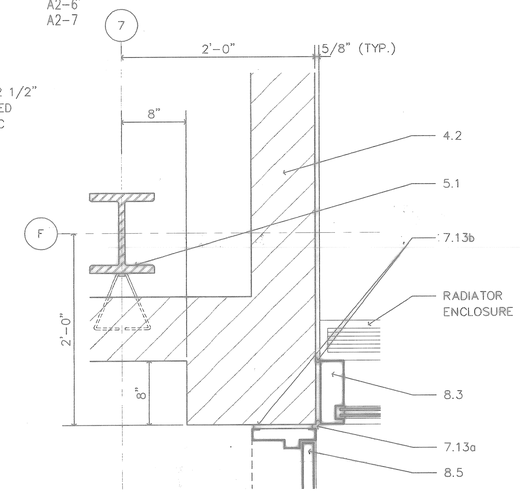


5 PLAN DETAIL
A2-5|A6-2 SCALE: 1-1/2"= 1'-0"

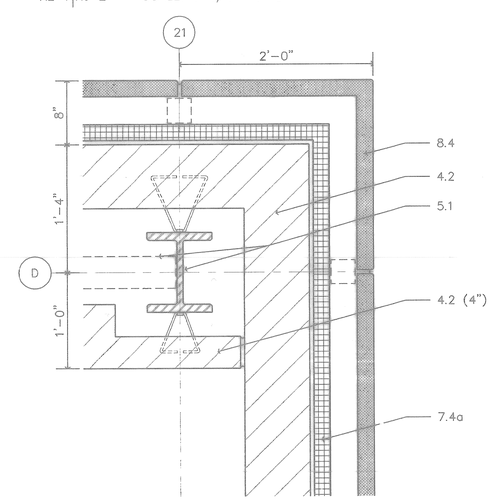


2 PLAN DETAIL
A2-5|A6-2 A2-7 SCALE: 1-1/2"= 1'-0"

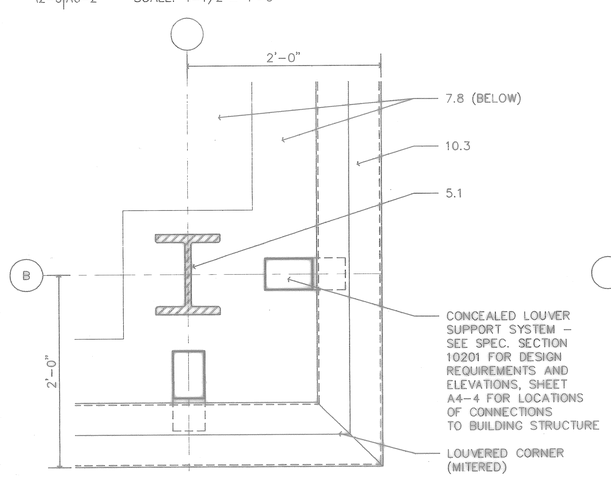


9 CORNER DETAIL @ LOUVER
A2-5|A6-2 SCALE: 1-1/2"= 1'-0"

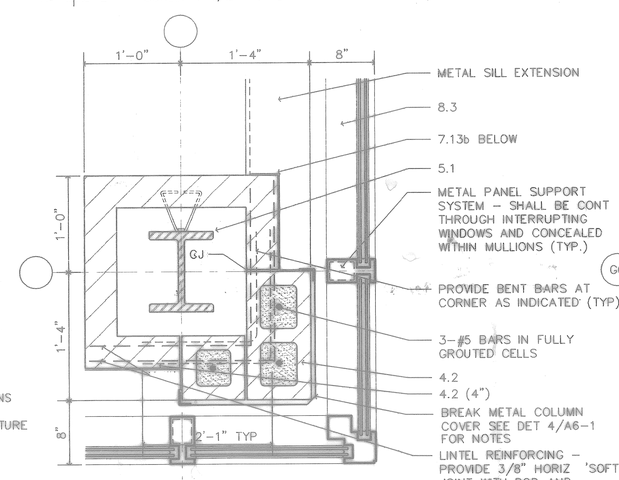


6 CORNER DETAIL @ LINTEL BEARING
A2-5|A6-2 A2-6 A2-7 SCALE: 1-1/2"= 1'-0"

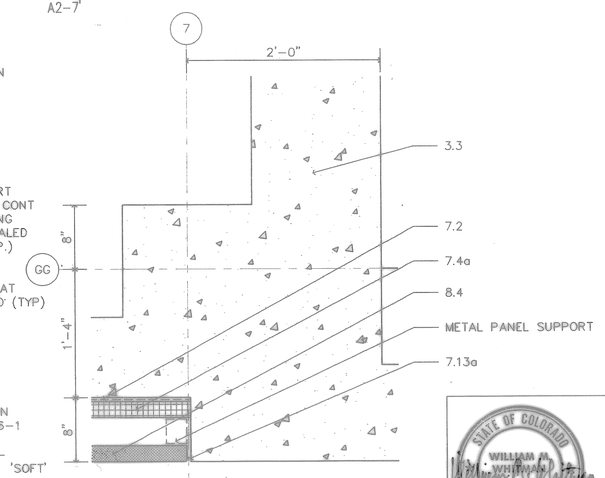


3 PLAN DETAIL
A2-4|A6-2 SCALE: 1-1/2"= 1'-0"

## MATERIAL LEGEND:

3 CONCRETE
3.1 CONCRETE SLAB OVER STEEL DECK
3.2 PRECAST CONCRETE SLAB WITH LIGHTWEIGHT CONCRETE TOPPING
3.3 CAST–IN–PLACE CONCRETE STRUCTURAL SYSTEM.

4 MASONRY
4.1 FACE BRICK 1/4 LAP RUNNING BOND
4.2 CONCRETE MASONRY UNITS (8" UNO)
4.3 CAST STONE COPING OR SILL
4.4 THROUGH–WALL FLASHING
4.5 WALL TIES

5 METALS
5.1 STRUCTURAL STEEL, PAINTED (PRIMED WHERE CONCEALED)
5.2 PAINTED ARCHITECTURAL EXPOSED STEEL
5.3 PAINTED STEEL HANDRAILS/GUARDRAILS
5.4 EXPANSION JOINT COVER ASSEMBLY
5.5 ALUMINUM HANDRAIL
5.6 LADDER
5.7 SAFETY CHAIN
5.8 SAFETY NOSING @ CONCRETE TREAD
5.9 SAFETY TREAD
5.10 STEEL STAIRS
5.11 MISC STEEL (SEE SHEET A8–3)
5.12 PERFORATED METAL PANEL, PAINTED
5.13 METAL GRATING, PAINTED
5.14 ALUMINUM COLUMN ENCLOSURE

6 WOODS AND PLASTICS
6.1 TREATED WOOD BLOCKING

7 THERMAL AND MOISTURE PROTECTION
7.1 BENTONITE WATERPROOFING
7.2 DAMPPROOFING
7.3 MINERAL FIBER BLANKET THERMAL INSULATION
a. BLANKET BATTS (R–11) FOIL FACED
b. BLANKET BATTS (R–11)
c. SILL SEALER
7.4 BOARD BLOCK INSULATION
a. RIGID INSULATION (R–11)
b. VAPOR RETARDER
7.5 ROOF INSULATION
a. INSULATION BOARD, (MIN, R–20)
b. TAPERED ROOF INSULATION
c. INSULATION CANT
d. VAPOR RETARDER
7.6 NOT USED
7.7 FIRE STOPPING ON RETAINING CLIPS
7.8 MODIFIED BITUMEN SHEET ROOFING
7.9 FLASHING
a. STAINLESS STEEL FLASHING
b. ALUMINUM FLASHING
7.10 METAL REGLET
7.11 ALUMINUM COPING OR SILL
7.12 NOT USED
7.13 SEALANT
a. EXTERIOR SEALANT, 2 LINES W/ BACKSTOPS AT ALL LOCATIONS
b. INTERIOR SEALANT
c. FLOOR JOINT SEALANT

8 DOOR AND WINDOWS
8.1 ALUMINUM DOORS AND FRAMES
8.2 ROLLING SERVICE DOORS
8.3 GLAZED CURTAINWALL SYSTEM
a. CURTAINWALL SUPPORT SYSTEM
8.4 PREFORMED METAL WALL PANELS
8.5 HM DOOR AND FRAME

9 FINISHES
9.1 PORTLAND CEMENT–LIME PLASTER
9.2 METAL SUPPORT SYSTEM
9.3 GYPSUM BOARD
a. REGULAR
b. TYPE "X"
c. GYPSUM BACKING BOARD
d. GYPSUM BACKING BOARD, FOIL FACED
e. WATER RESISTANT GYPSUM BACKING BOARD
f. CEMENTITIOUS BACKER UNITS
9.4 ACOUSTICAL CEILING

10 SPECIALITIES
10.1 METAL WALL LOUVERS W/ INSECT SCREEN
10.2 FLAGPOLE
10.3 LOUVER

11 EQUIPMENT
11.1 FIXED TYPE INDUSTRIAL DOCK LEVELER

12 FURNISHINGS
12.1 RECESSED FLOOR GRILLE AND FRAME
12.2 VENETIAN BLINDS

GRAPHIC SCALE
1' 9" 6" 3" 0' 1' 2'
SCALE 1-1/2" = 1'-0"

FOR OFFICIAL USE ONLY

RECORD DRAWING
DATE 06/03/98

0 – DATE 07-31-97 DSN# AS-BUILT, NO CORRECTIONS BY _____ DSN# _____ H.M.W.

Knight Architects Engineers Planners, Inc.
549 West Randolph Street
Chicago, IL 60661
Established in 1947
Successor to Knight & Associates, Inc. Company
A-Copyright 1994 Knight Architects Engineers Planners, Inc.

DSGN WARD DR HSU CHK LORENZ
SUPV WHITMAN CH ENGR
SUBMITTED BY DATE
APPROVED DATE
EIC BR HEAD
FPE DR
APPROVED DATE
OFFICER IN CHARGE
APPROVED DATE 9/10/94
ITD FOR COMMANDER NAVFAC

STATE OF COLORADO
WILLIAM H. WHITMAN
B-1222
LICENSED ARCHITECT
ARCH. & ENGR. SEAL

DEPARTMENT OF THE NAVY — NAVAL FACILITIES ENGINEERING COMMAND
SOUTHERN DIVISION
CHARLESTON, S.C.
NAVAL TRAINING CENTER — GREAT LAKES, ILLINOIS

DAMAGE CONTROL SCHOOL
EXTERIOR WALL DETAILS

| SIZE | CODE IDENT NO. | NAVFAC DRAWING NO. | DRAWING NO. |
|---|---|---|---|
| F | 80091 | 5276493 | A6-2 |
| | | CONSTR CONTR NO. N62467-93-C-1143 | |
| SCALE 1-1/2"= 1'-0" | | SPEC 06-93-1143 | SHEET 68 OF |

Filename: P:\PAPER\JAPSA602 User: DPA Date&time: 08/19/94 15:20:32

| | | |
|---|---|---|
| P: TIL-BLOK PS | hsm=0.0 | |
| P: TIL-A602 PS | hsm=0.0 | |
| P: JAPSA602 PS | hsm=0.0 | |
| P: JAGSW12 MS | hsm=0.0 | |
| P: JAGSX106 MS | hsm=0.0 | |

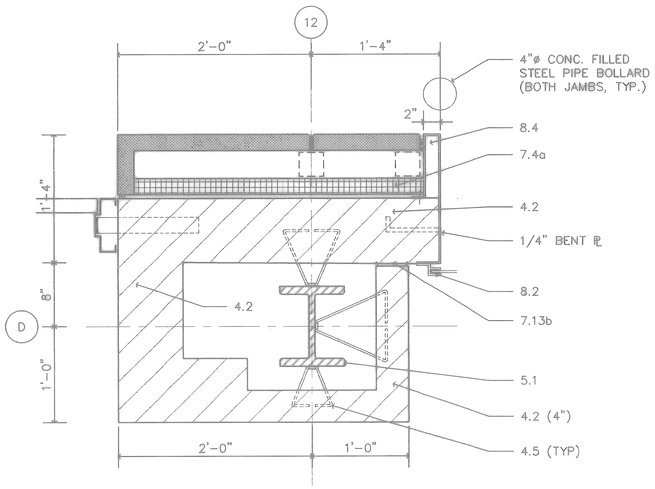


7 PLAN DETAIL
A2-5|A6-3 SCALE: 1-1/2"= 1'-0"

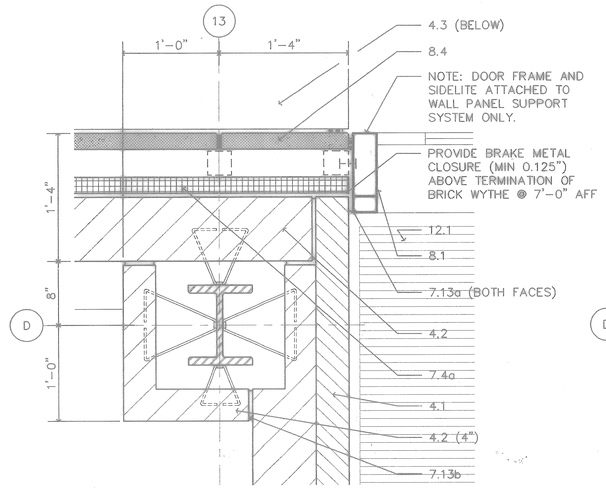


4 PLAN DETAIL
A2-5|A6-3 SCALE: 1-1/2"= 1'-0"

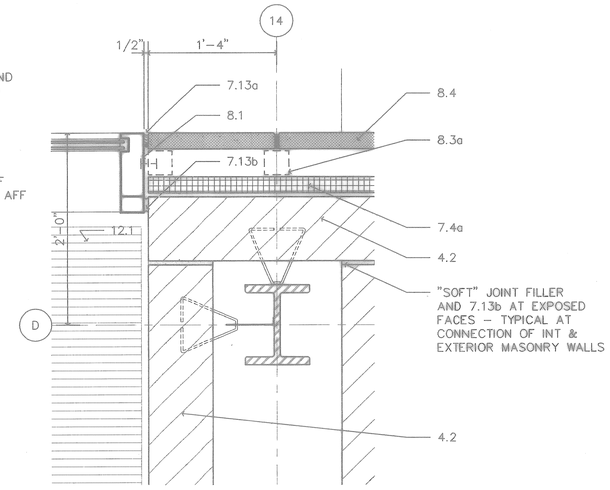


1 PLAN DETAIL
A2-5|A6-3 SCALE: 1-1/2"= 1'-0"

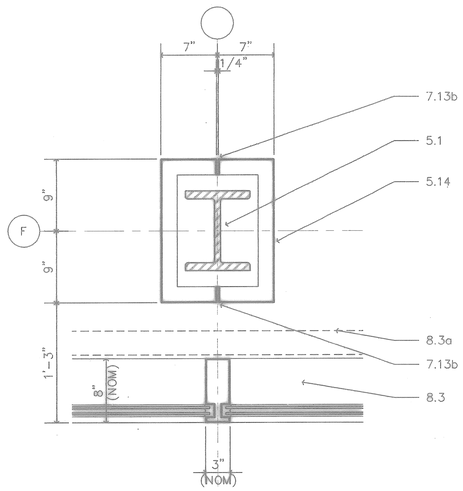


8 PLAN DETAIL
A2-5|A6-3 SCALE: 1-1/2"= 1'-0"
A2-6
A2-7

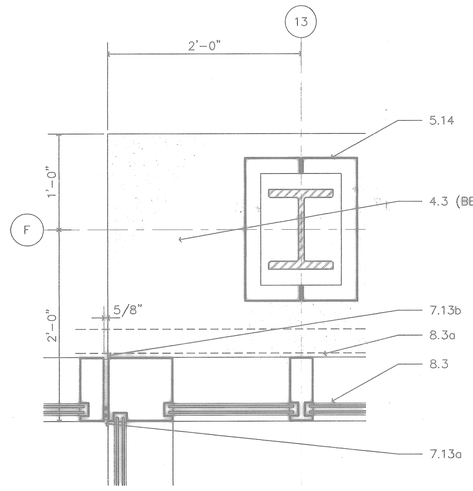


5 PLAN DETAIL
A2-5|A6-3 SCALE: 1-1/2"= 1'-0"

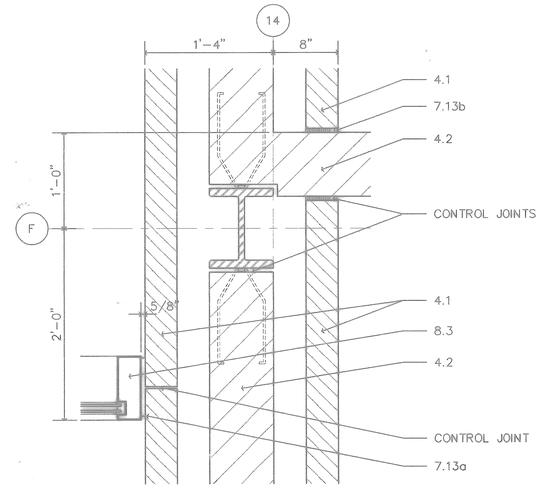


2 PLAN DETAIL
A2-5|A6-3 SCALE: 1-1/2"= 1'-0"

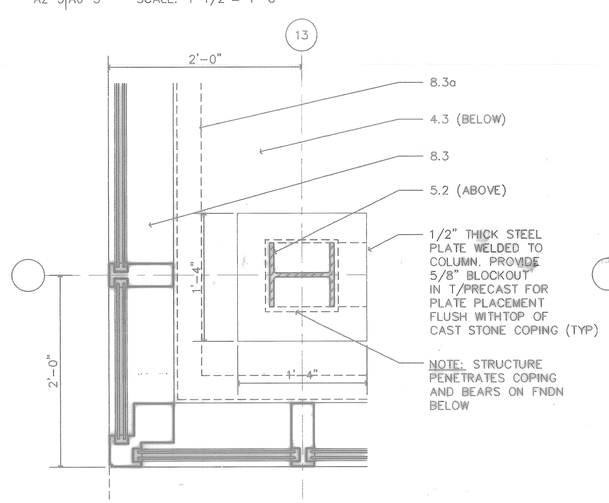


6 PLAN DETAIL
A2-5|A6-3 SCALE: 1-1/2"= 1'-0"

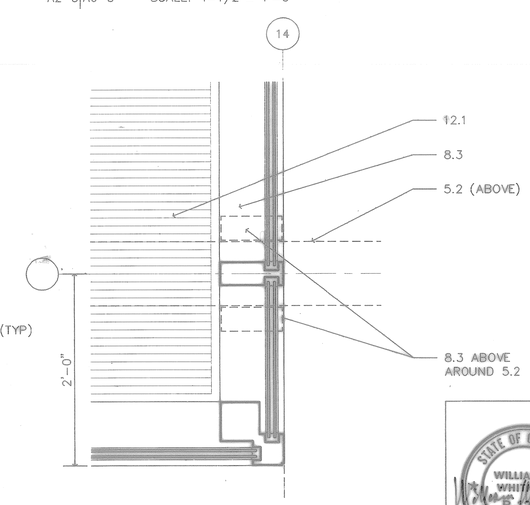


3 PLAN DETAIL
A2-5|A6-3 SCALE: 1-1/2"= 1'-0"

## MATERIAL LEGEND:

3 CONCRETE
3.1 CONCRETE SLAB OVER STEEL DECK
3.2 PRECAST CONCRETE SLAB WITH LIGHTWEIGHT CONCRETE TOPPING
3.3 CAST-IN-PLACE CONCRETE STRUCTURAL SYSTEM.

4 MASONRY
4.1 FACE BRICK 1/4 LAP RUNNING BOND
4.2 CONCRETE MASONRY UNITS (8" UNO)
4.3 CAST STONE COPING OR SILL
4.4 THROUGH-WALL FLASHING
4.5 WALL TIES

5 METALS
5.1 STRUCTURAL STEEL, PAINTED (PRIMED WHERE CONCEALED)
5.2 PAINTED ARCHITECTURAL EXPOSED STEEL
5.3 PAINTED STEEL HANDRAILS/GUARDRAILS
5.4 EXPANSION JOINT COVER ASSEMBLY
5.5 ALUMINUM HANDRAIL
5.6 LADDER
5.7 SAFETY CHAIN
5.8 SAFETY NOSING @ CONCRETE TREAD
5.9 SAFETY TREAD
5.10 STEEL STAIRS
5.11 MISC STEEL (SEE SHEET A8-3)
5.12 PERFORATED METAL PANEL, PAINTED
5.13 METAL GRATING, PAINTED
5.14 ALUMINUM COLUMN ENCLOSURE

6 WOODS AND PLASTICS
6.1 TREATED WOOD BLOCKING

7 THERMAL AND MOISTURE PROTECTION
7.1 BENTONITE WATERPROOFING
7.2 DAMPPROOFING
7.3 MINERAL FIBER BLANKET THERMAL INSULATION
a. BLANKET BATTS (R-11) FOIL FACED
b. BLANKET BATTS (R-11)
c. SILL SEALER
7.4 BOARD BLOCK INSULATION
a. RIGID INSULATION (R-11)
b. VAPOR RETARDER
7.5 ROOF INSULATION
a. INSULATION BOARD, (MIN, R-20)
b. TAPERED ROOF INSULATION
c. INSULATION CANT
d. VAPOR RETARDER
7.6 NOT USED
7.7 FIRE STOPPING ON RETAINING CLIPS
7.8 MODIFIED BITUMEN SHEET ROOFING
7.9 FLASHING
a. STAINLESS STEEL FLASHING
b. ALUMINUM FLASHING
7.10 METAL REGLET
7.11 ALUMINUM COPING OR SILL
7.12 NOT USED
7.13 SEALANT
a. EXTERIOR SEALANT, 2 LINES W/ BACKSTOPS AT ALL LOCATIONS
b. INTERIOR SEALANT
c. FLOOR JOINT SEALANT

8 DOOR AND WINDOWS
8.1 ALUMINUM DOORS AND FRAMES
8.2 ROLLING SERVICE DOORS
8.3 GLAZED CURTAINWALL SYSTEM
a. CURTAINWALL SUPPORT SYSTEM
8.4 PREFORMED METAL WALL PANELS
8.5 HM DOOR AND FRAME

9 FINISHES
9.1 PORTLAND CEMENT-LIME PLASTER
9.2 METAL SUPPORT SYSTEM
9.3 GYPSUM BOARD
a. REGULAR
b. TYPE "X"
c. GYPSUM BACKING BOARD
d. GYPSUM BACKING BOARD, FOIL FACED
e. WATER RESISTANT GYPSUM BACKING BOARD
f. CEMENTITIOUS BACKER UNITS
9.4 ACOUSTICAL CEILING

10 SPECIALITIES
10.1 METAL WALL LOUVERS W/ INSECT SCREEN
10.2 FLAGPOLE
10.3 LOUVER

11 EQUIPMENT
11.1 FIXED TYPE INDUSTRIAL DOCK LEVELER

12 FURNISHINGS
12.1 RECESSED FLOOR GRILLE AND FRAME
12.2 VENETIAN BLINDS

GRAPHIC SCALE
1' 9" 6" 3" 0' 1' 2'
SCALE 1-1/2" = 1'-0"

FOR OFFICIAL USE ONLY

RECORD DRAWING
DATE 06/08/98

DATE 07-31-97 SHEET AS-BUILT, NO CORRECTIONS BY: BY: N.A.W.

Krueck Architects Engineers Planners, Inc.
540 West Randolph Street
Chicago, IL 60661
Established in 1940
Successor to Krueck & Associates, Inc. Company
Copyright 1994 Krueck Architects Engineers Planners, Inc.

DEPARTMENT OF THE NAVY — NAVAL FACILITIES ENGINEERING COMMAND
SOUTHERN DIVISION
CHARLESTON, S.C.

NAVAL TRAINING CENTER — GREAT LAKES, ILLINOIS

DSGN WARD DR HSU CHK LORENZ
SUPV WHITMAN CH ENGR
SUBMITTED BY — DATE 9/12/94
FOR MASTER FILE
EIC — BR HD
FPE — DR

# DAMAGE CONTROL SCHOOL
# EXTERIOR WALL DETAILS

STATE OF COLORADO
WILLIAM A. WHITMAN
B-1222
LICENSED ARCHITECT
ARCH. & ENGR. SEAL

APPROVED — DATE
OFFICER-IN-CHARGE
APPROVED — DATE 9/12/94
CFD FOR COMMANDER, NAVFAC

| SIZE | CODE IDFNT NO. | NAVFAC DRAWING NO. | DRAWING NO. |
|---|---|---|---|
| F | 80091 | 5276494 | A6-3 |
| SCALE 1-1/2"= 1'-0" | | CONSTR CONTR NO. N62467-93-C-1143 | |
| | | SPEC 06-93-1143 | SHEET 69 OF |

P: TL-BLDG PS Ivs=0.0
P: TL-FURN PS Ivs=0.0
P: JAPA4603 PS Ivs=0.0
P: JAGSHR2 MS Ivs=0.0
P: JAGDEX07 MS Ivs=0.0

Date&time: 08/19/94 13:26:33 User: DPA Filename: P:\PAPER\JAPSA603

69

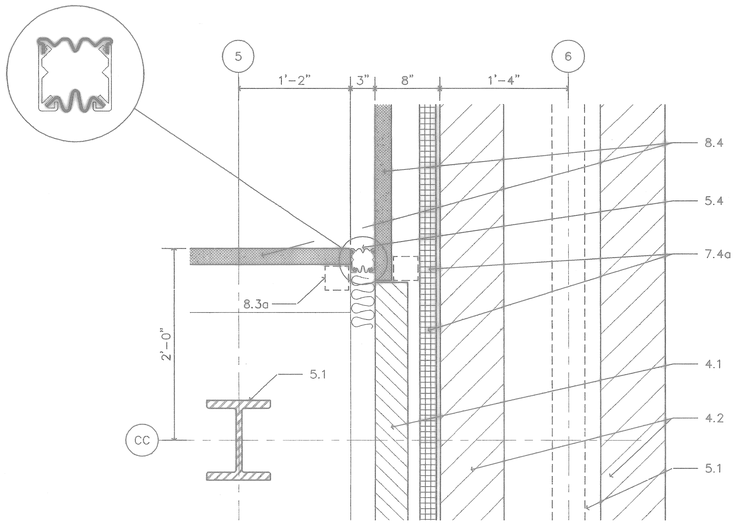


6 **PLAN DETAIL**
A2-2 A6-4 A2-7 SCALE: 1-1/2"= 1'-0"

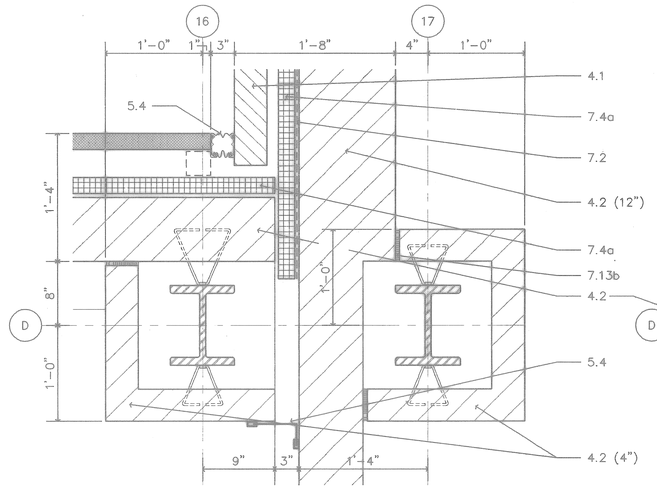


3 **PLAN DETAIL**
A2-5 A6-4 A2-6 SCALE: 1-1/2"= 1'-0"

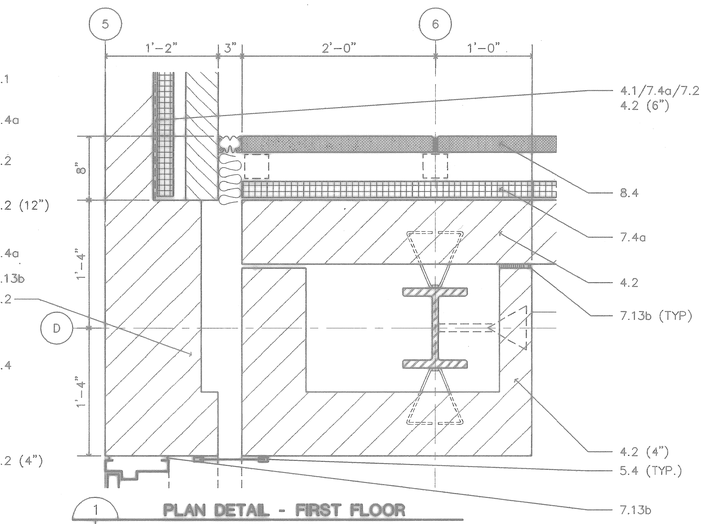


1 **PLAN DETAIL - FIRST FLOOR**
A2-5 A6-4 SCALE: 1-1/2"= 1'-0"

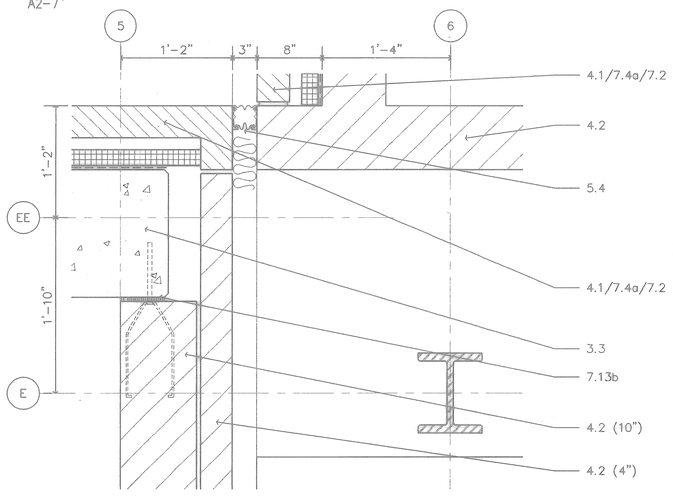


7 **PLAN DETAIL**
A2-3 A6-4 A2-7 SCALE: 1-1/2"= 1'-0"

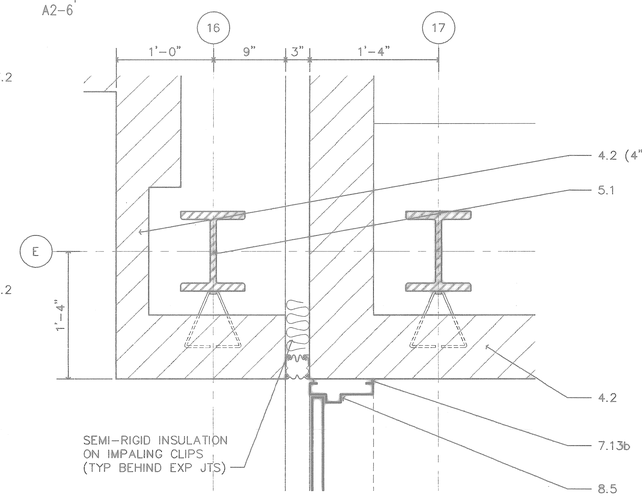


4 **PLAN DETAIL**
A2-5 A6-4 A2-6 SCALE: 1-1/2"= 1'-0"

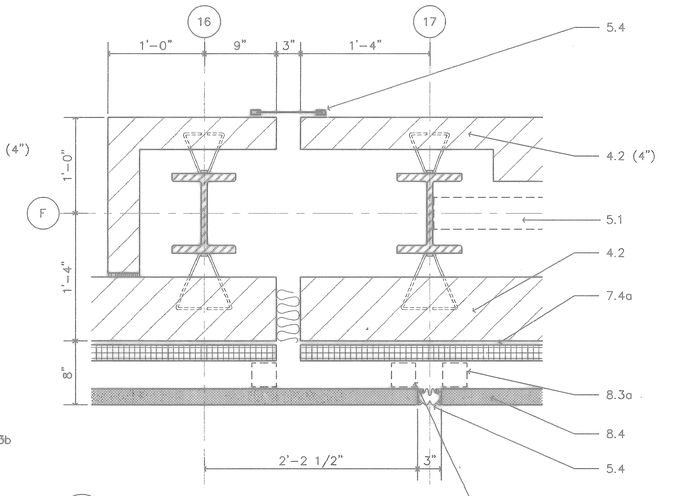


THESE SUPPORT CONNECTIONS TO STRUCTURE ARE TO ALLOW VERTICAL AND HORIZONTAL MOVEMENT RELATIVE TO THE FACE OF STRUCTURE (VERTICAL AND LATERAL MOVEMENT)

2 **PLAN DETAIL - THIRD FLOOR**
A2-7 A6-4 SCALE: 1-1/2"= 1'-0"

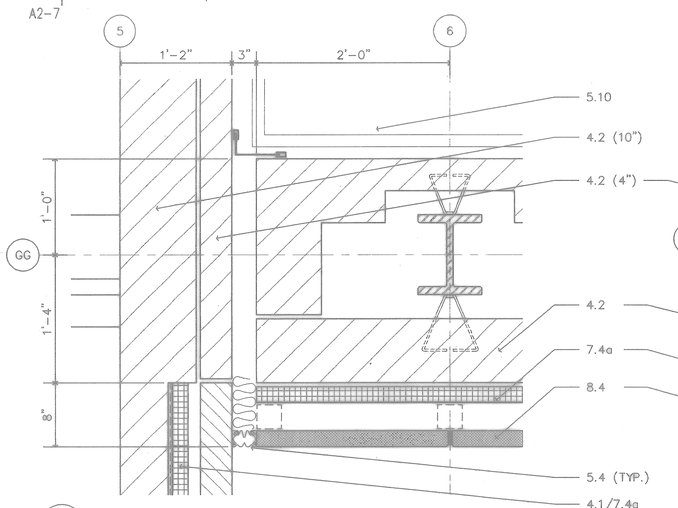


8 **PLAN DETAIL**
A2-1 A6-4 A2-6 A2-7 A2-2 A2-3 SCALE: 1-1/2"= 1'-0"

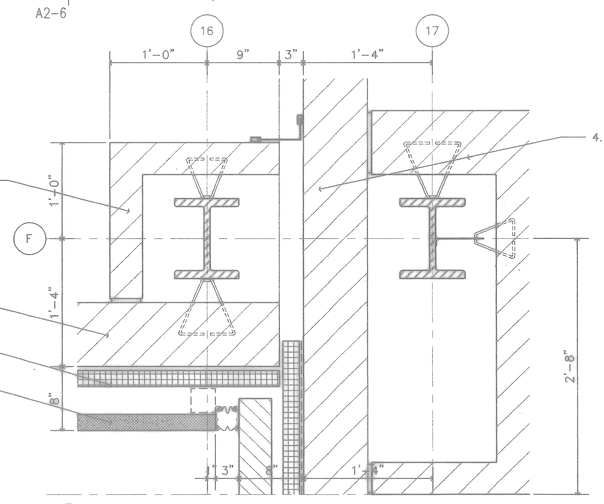


5 **PLAN DETAIL**
A2-5 A6-4 A2-6 SCALE: 1-1/2"= 1'-0"

## MATERIAL LEGEND:

3 CONCRETE
3.1 CONCRETE SLAB OVER STEEL DECK
3.2 PRECAST CONCRETE SLAB WITH LIGHTWEIGHT CONCRETE TOPPING
3.3 CAST-IN-PLACE CONCRETE STRUCTURAL SYSTEM.

4 MASONRY
4.1 FACE BRICK 1/4 LAP RUNNING BOND
4.2 CONCRETE MASONRY UNITS (8" UNO)
4.3 CAST STONE COPING OR SILL
4.4 THROUGH-WALL FLASHING
4.5 WALL TIES

5 METALS
5.1 STRUCTURAL STEEL, PAINTED (PRIMED WHERE CONCEALED)
5.2 PAINTED ARCHITECTURAL EXPOSED STEEL
5.3 PAINTED STEEL HANDRAILS/GUARDRAILS
5.4 EXPANSION JOINT COVER ASSEMBLY
5.5 ALUMINUM HANDRAIL
5.6 LADDER
5.7 SAFETY CHAIN
5.8 SAFETY NOSING @ CONCRETE TREAD
5.9 SAFETY TREAD
5.10 STEEL STAIRS
5.11 MISC STEEL (SEE SHEET A8-3)
5.12 PERFORATED METAL PANEL, PAINTED
5.13 METAL GRATING, PAINTED
5.14 ALUMINUM COLUMN ENCLOSURE

6 WOODS AND PLASTICS
6.1 TREATED WOOD BLOCKING

7 THERMAL AND MOISTURE PROTECTION
7.1 BENTONITE WATERPROOFING
7.2 DAMPPROOFING
7.3 MINERAL FIBER BLANKET THERMAL INSULATION
a. BLANKET BATTS (R-11) FOIL FACED
b. BLANKET BATTS (R-11)
c. SILL SEALER
7.4 BOARD BLOCK INSULATION
a. RIGID INSULATION (R-11)
b. VAPOR RETARDER
7.5 ROOF INSULATION
a. INSULATION BOARD, (MIN, R-20)
b. TAPERED ROOF INSULATION
c. INSULATION CANT
d. VAPOR RETARDER
7.6 NOT USED
7.7 FIRE STOPPING ON RETAINING CLIPS
7.8 MODIFIED BITUMEN SHEET ROOFING
7.9 FLASHING
a. STAINLESS STEEL FLASHING
b. ALUMINUM FLASHING
7.10 METAL REGLET
7.11 ALUMINUM COPING OR SILL
7.12 NOT USED
7.13 SEALANT
a. EXTERIOR SEALANT, 2 LINES W/ BACKSTOPS AT ALL LOCATIONS
b. INTERIOR SEALANT
c. FLOOR JOINT SEALANT

8 DOOR AND WINDOWS
8.1 ALUMINUM DOORS AND FRAMES
8.2 ROLLING SERVICE DOORS
8.3 GLAZED CURTAINWALL SYSTEM
a. CURTAINWALL SUPPORT SYSTEM
8.4 RREFORMED METAL WALL PANELS
8.5 HM DOOR AND FRAME

9 FINISHES
9.1 PORTLAND CEMENT-LIME PLASTER
9.2 METAL SUPPORT SYSTEM
9.3 GYPSUM BOARD
a. REGULAR
b. TYPE "X"
c. GYPSUM BACKING BOARD
d. GYPSUM BACKING BOARD, FOIL FACED
e. WATER RESISTANT GYPSUM BACKING BOARD
f. CEMENTITIOUS BACKER UNITS
9.4 ACOUSTICAL CEILING

10 SPECIALITIES
10.1 METAL WALL LOUVERS W/ INSECT SCREEN
10.2 FLAGPOLE
10.3 LOUVER

11 EQUIPMENT
11.1 FIXED TYPE INDUSTRIAL DOCK LEVELER

12 FURNISHINGS
12.1 RECESSED FLOOR GRILLE AND FRAME
12.2 VENETIAN BLINDS

GRAPHIC SCALE
1' 9" 6" 3" 0' 1' 2'
SCALE 1-1/2" = 1'-0"

FOR OFFICIAL USE ONLY

RECORD DRAWING
DATE 06/08/98

| | | | |
|---|---|---|---|
| DATE 07-31-97 | DATE AS-BUILT, NO CORRECTIONS | BY | DATE | H.A.W. |

Knight Architects Engineers Planners, Inc.
549 West Randolph Street
Chicago, IL 60661
(312) 876-1800
A Joint Venture of Knight Architects Engineers Planners, Inc. and Associated Joint Knight Architects Engineers Planners, Inc.

DSGN WARD DR HSU CHK LORENZ
SUPV WHITMAN CH ENGR
SUBMITTED BY DATE 6/10/94
PROJ MGRS MGR
EIC DR HSU
FPE DR

DEPARTMENT OF THE NAVY — NAVAL FACILITIES ENGINEERING COMMAND
SOUTHERN DIVISION
CHARLESTON, S.C.

NAVAL TRAINING CENTER — GREAT LAKES, ILLINOIS

**DAMAGE CONTROL SCHOOL**
**EXTERIOR WALL DETAILS**

STATE OF COLORADO — WILLIAM A. WHITMAN — B-1222 — LICENSED ARCHITECT
ARCH. & ENGR. SEAL

APPROVED DATE
OFFICER IN CHARGE
APPROVED DATE 9/13/94
FOR COMMANDER, NAVFAC

| SIZE | CODE IDENT NO. | NAVFAC DRAWING NO. | DRAWING NO. |
|---|---|---|---|
| F | 80091 | 5276495 | A6-4 |
| | | CONSTR CONTR NO. N62467-93-C-1143 | |
| SCALE 1-1/2"= 1'-0" | | SPEC 06-93-1143 | SHEET 70 OF |

| | | | |
|---|---|---|---|
| P: TL-BLDG PS | Hsm=0.0 | | |
| P: TL-ROOT PS | Hsm=0.0 | | |
| P: JAPAA604 PS | Hsm=0.0 | | |
| P: JAGER209 MS | Hsm=0.0 | | |
| P: JAGSN72 MS | Hsm=0.0 | | |

Date&time: 08/19/94 15:45:24 User: DPA Filename: P:\PAPER\JAPSA604

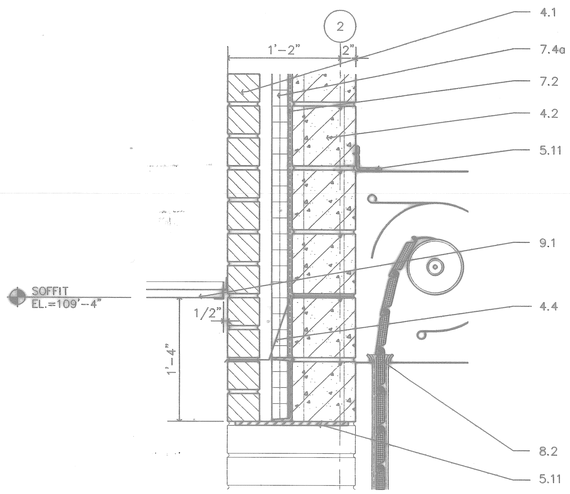


6 SECTION DETAIL
A5-6|A6-5 SCALE: 1-1/2"= 1'-0"

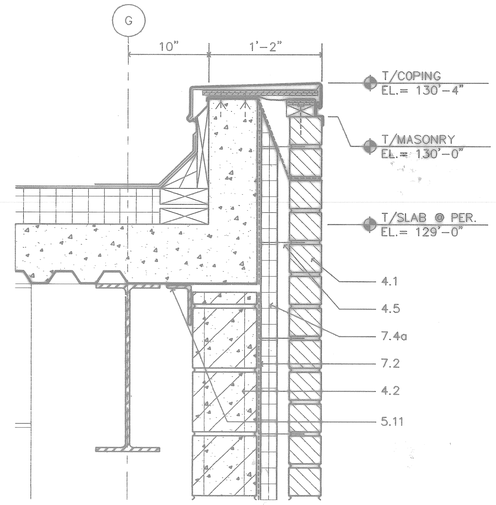


3 SECTION DETAIL
A5-3|A6-5 SCALE: 1-1/2"= 1'-0"

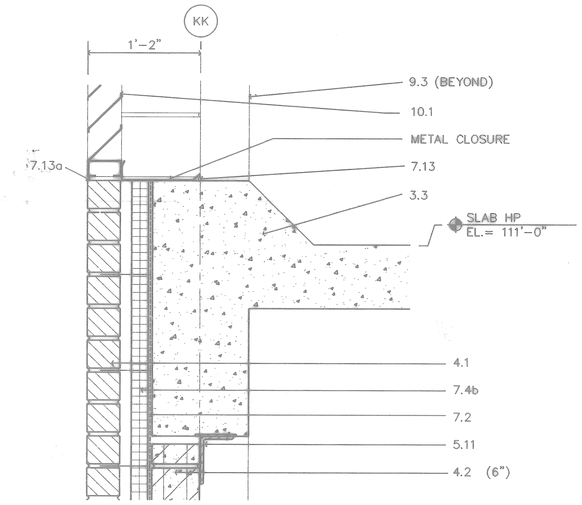


1 SECTION DETAIL
A5-1|A6-5 SCALE: 1-1/2"= 1'-0"

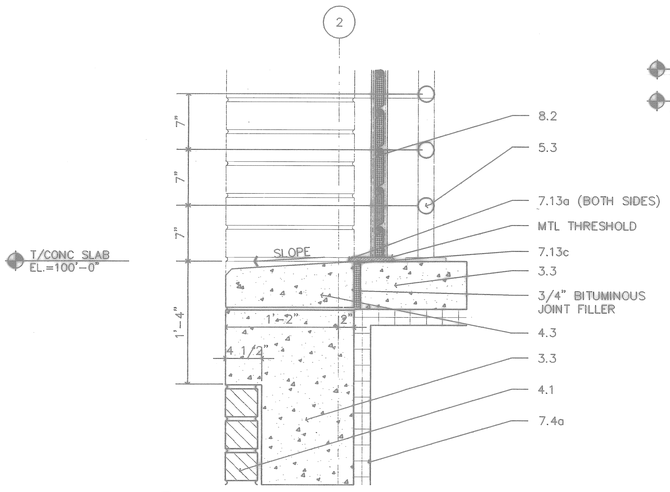


7 SECTION DETAIL
A5-6|A6-5 SCALE: 1-1/2"= 1'-0"

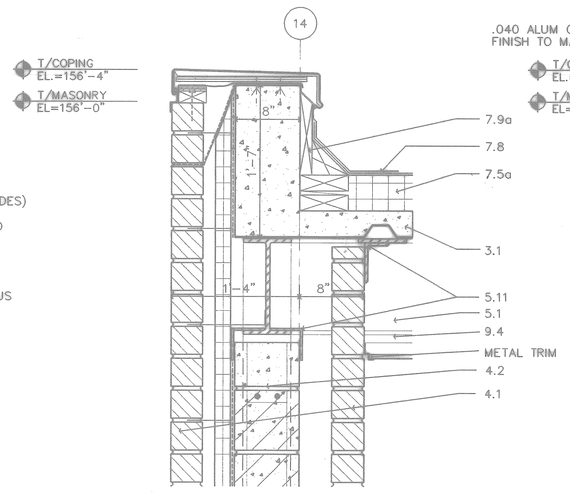


4 SECTION DETAIL
A5-6|A6-5 SCALE: 1-1/2"= 1'-0"

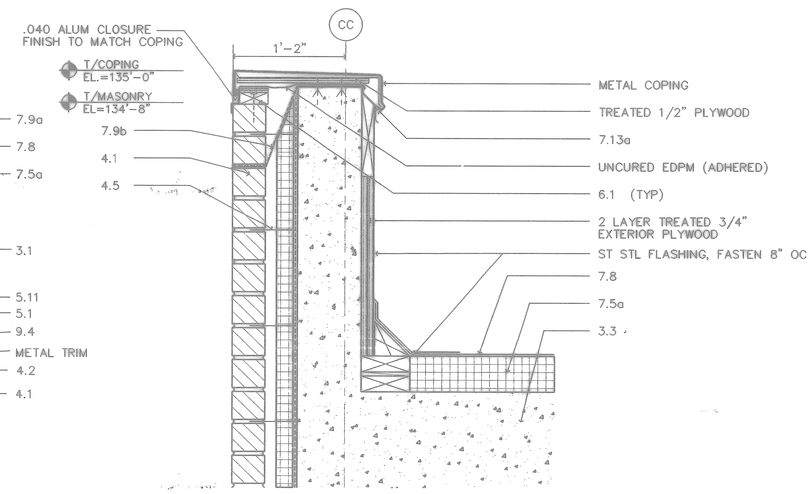


2 SECTION DETAIL
A5-2|A6-5 SCALE: 1-1/2"= 1'-0"

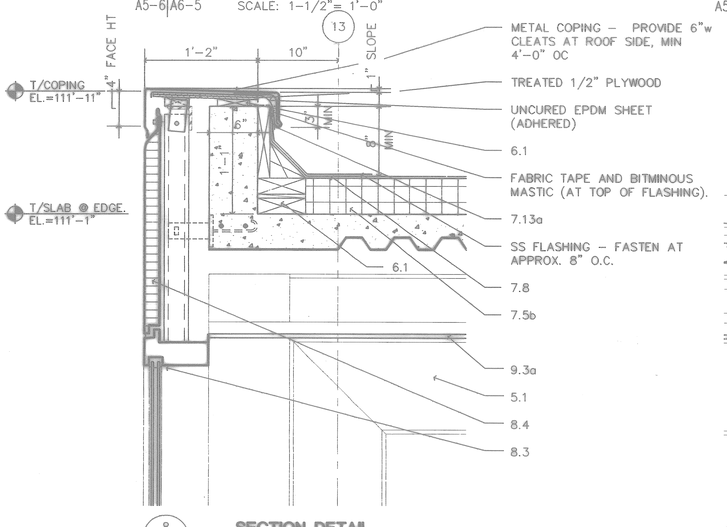


8 SECTION DETAIL
A5-6|A6-5 SCALE: 1-1/2"= 1'-0"

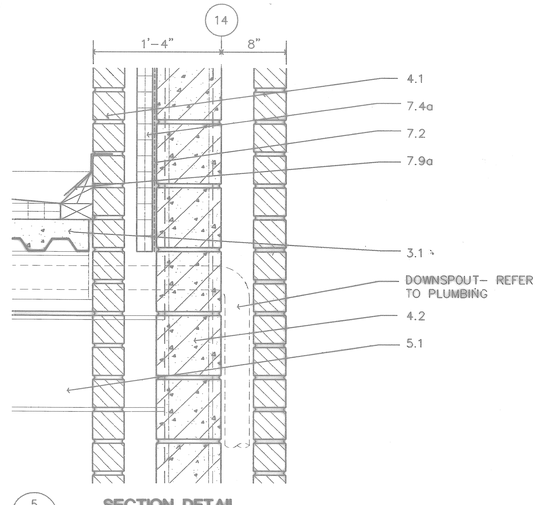


5 SECTION DETAIL
A5-6|A6-5 SCALE: 1-1/2"= 1'-0"

GRAPHIC SCALE
1' 9" 6" 3" 0' 1' 2'
SCALE 1-1/2" = 1'-0"

## MATERIAL LEGEND:

3 CONCRETE
3.1 CONCRETE SLAB OVER STEEL DECK
3.2 PRECAST CONCRETE SLAB WITH LIGHTWEIGHT CONCRETE TOPPING
3.3 CAST-IN-PLACE CONCRETE STRUCTURAL SYSTEM.

4 MASONRY
4.1 FACE BRICK 1/4 LAP RUNNING BOND
4.2 CONCRETE MASONRY UNITS (8" UNO)
4.3 CAST STONE COPING
4.4 THROUGH-WALL FLASHING
4.5 WALL TIES

5 METALS
5.1 STRUCTURAL STEEL, PAINTED (PRIMED WHERE CONCEALED)
5.2 PAINTED ARCHITECTURAL EXPOSED STEEL
5.3 PAINTED STEEL HANDRAILS/GUARDRAILS
5.4 EXPANSION JOINT COVER ASSEMBLY
5.5 ALUMINUM HANDRAIL
5.6 LADDER
5.7 SAFETY CHAIN
5.8 SAFETY NOSING @ CONCRETE TREAD
5.9 SAFETY TREAD
5.10 STEEL STAIRS
5.11 MISC STEEL (SEE SHEET A8-3)
5.12 PERFORATED METAL PANEL, PAINTED
5.13 METAL GRATING, PAINTED
5.14 ALUMINUM COLUMN ENCLOSURE

6 WOODS AND PLASTICS
6.1 TREATED WOOD BLOCKING

7 THERMAL AND MOISTURE PROTECTION
7.1 BENTONITE WATERPROOFING
7.2 DAMPPROOFING
7.3 MINERAL FIBER BLANKET THERMAL INSULATION
a. BLANKET BATTS (R-11) FOIL FACED
b. BLANKET BATTS (R-11)
c. SILL SEALER
7.4 BOARD BLOCK INSULATION
a. RIGID INSULATION (R-11)
b. VAPOR RETARDER
7.5 ROOF INSULATION
a. INSULATION BOARD, (MIN. R-20)
b. TAPERED ROOF INSULATION
c. INSULATION CANT
d. VAPOR RETARDER
7.6 NOT USED
7.7 FIRE STOPPING ON RETAINING CLIPS
7.8 MODIFIED BITUMEN SHEET ROOFING
7.9 FLASHING
a. STAINLESS STEEL FLASHING
b. ALUMINUM FLASHING
7.10 METAL REGLET
7.11 ALUMINUM COPING OR SILL
7.12 NOT USED
7.13 SEALANT
a. EXTERIOR SEALANT, 2 LINES W/ BACKSTOPS AT ALL LOCATIONS
b. INTERIOR SEALANT
c. FLOOR JOINT SEALANT

8 DOOR AND WINDOWS
8.1 ALUMINUM DOORS AND FRAMES
8.2 ROLLING SERVICE DOORS
8.3 GLAZED CURTAINWALL SYSTEM
a. CURTAINWALL SUPPORT SYSTEM
8.4 PREFORMED METAL WALL PANELS
8.5 HM DOOR AND FRAME

9 FINISHES
9.1 PORTLAND CEMENT-LIME PLASTER
9.2 METAL SUPPORT SYSTEM
9.3 GYPSUM BOARD
a. REGULAR
b. TYPE "X"
c. GYPSUM BACKING BOARD
d. GYPSUM BACKING BOARD, FOIL FACED
e. WATER RESISTANT GYPSUM BACKING BOARD
f. CEMENTITIOUS BACKER UNITS
9.4 ACOUSTICAL CEILING

10 SPECIALITIES
10.1 METAL WALL LOUVERS W/ INSECT SCREEN
10.2 FLAGPOLE
10.3 LOUVER

11 EQUIPMENT
11.1 FIXED TYPE INDUSTRIAL DOCK LEVELER

12 FURNISHINGS
12.1 RECESSED FLOOR GRILLE AND FRAME
12.2 VENETIAN BLINDS

FOR OFFICIAL USE ONLY

RECORD DRAWING
DATE 06/08/98

DATE 07-31-97 AS-BUILT, HO CORRECTIONS

Knight Architects Engineers Planners, Inc.
540 West Randolph Street
Chicago, IL 60661
Established 1945
A Corporation and a Subsidiary Company
A Corporation and Knight Architects Engineers Planners, Inc.

DEPARTMENT OF THE NAVY — NAVAL FACILITIES ENGINEERING COMMAND
SOUTHERN DIVISION
CHARLESTON, S.C.

NAVAL TRAINING CENTER — GREAT LAKES, ILLINOIS

DAMAGE CONTROL SCHOOL
EXTERIOR WALL DETAILS

DSGN WARD DR HSU CHK LORENZ
SURV WHITMAN CH ENGR
SUBMITTED BY DATE 9/12/94
DSN MANAGER TITLE
EIC BR HD
FPE DR

STATE OF COLORADO
WILLIAM M. WHITMAN
B-1222
LICENSED ARCHITECT
ARCH. & ENGR. SEAL

APPROVED DATE
OFFICER-IN-CHARGE
APPROVED DATE 9/12/94
ED FOR COMMANDER, NAVFAC

| SIZE | CODE IDENT NO. | NAVFAC DRAWING NO. | DRAWING NO. |
|---|---|---|---|
| F | 80091 | 5276496 | A6-5 |
| SCALE 1-1/2"= 1'-0" | | CONSTR CONTR NO. N62467-93-C-1143 | |
| | | SPEC 06-93-1143 | SHEET 71 OF |

User: MAW Filename: P:\PAPER\JAPSA605
Date&time: 08/25/94 09:46:56

| | | | |
|---|---|---|---|
| P: TR--BLCK | PS | Item=0,0 | |
| P: TR--HINGE | PS | Item=0,0 | |
| P: JAPSA605 | PS | Item=0,0 | |
| P: JAVBS1001 | MS | Item=0,0 | |
| P: AVBW02 | MS | Item=0,0 | |

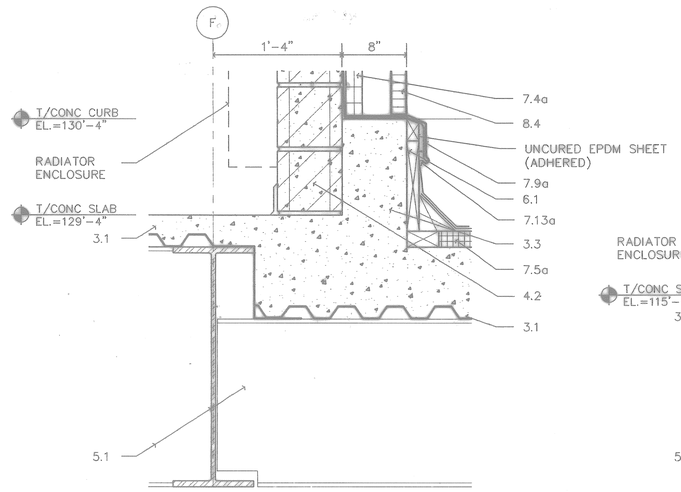


7 SECTION DETAIL
A5-3|A6-6 SCALE: 1-1/2"= 1'-0"

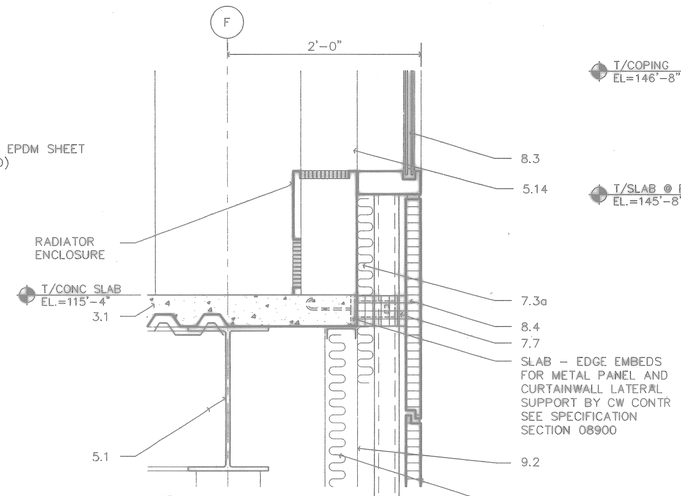


4 SECTION DETAIL
A5-3|A6-6 SCALE: 1-1/2"= 1'-0"

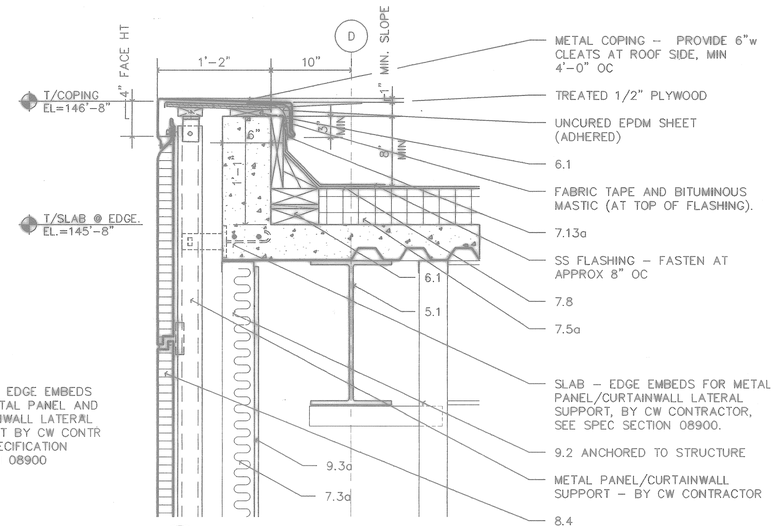


1 SECTION DETAIL
A5-3|A6-6 SCALE: 1-1/2"= 1'-0"

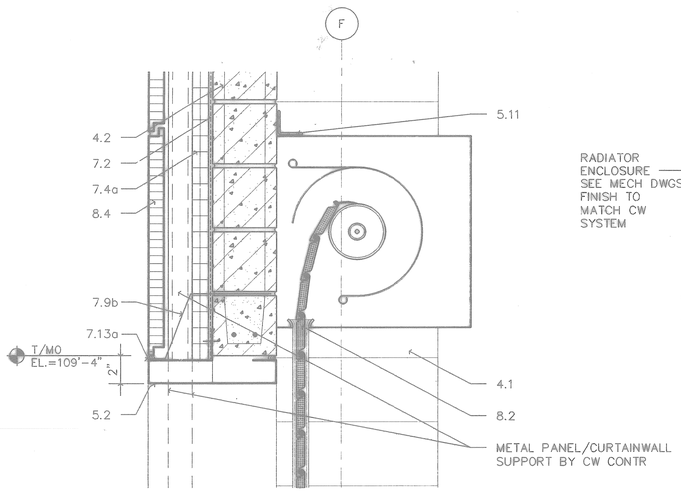


8 SECTION DETAIL
A5-3|A6-6 SCALE: 1-1/2"= 1'-0"

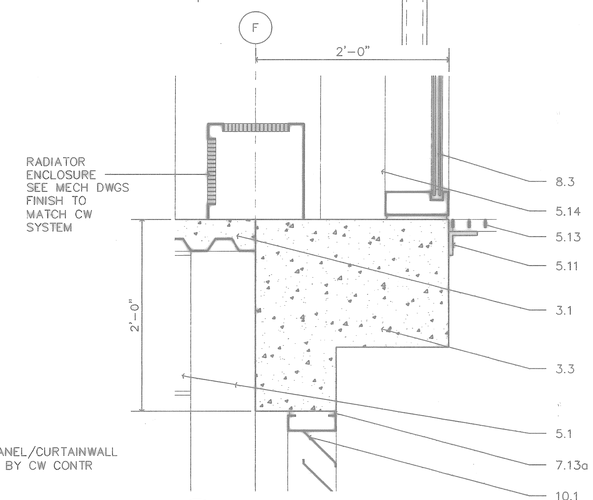


5 SECTION DETAIL
A5-3|A6-6 SCALE: 1-1/2"= 1'-0"

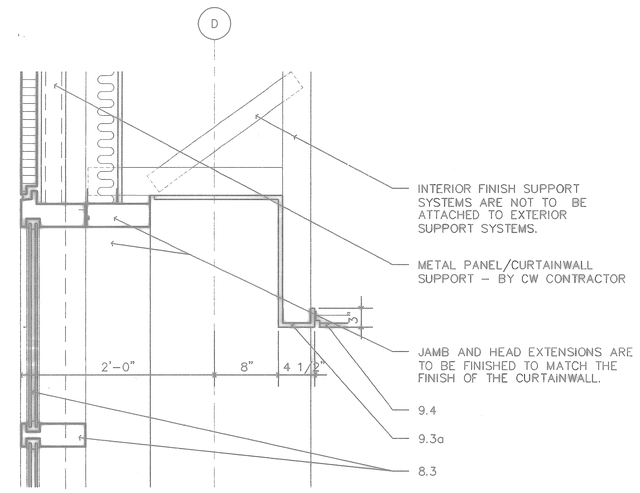


2 SECTION DETAIL
A5-3|A6-6 SCALE: 1-1/2"= 1'-0"

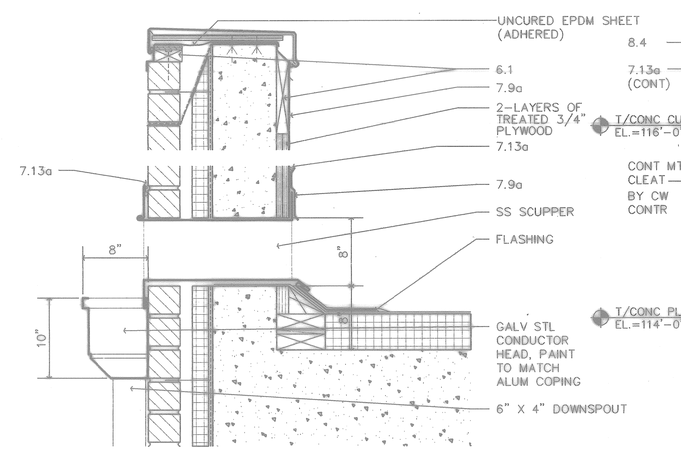


9 SECTION DETAIL
A4-4|A6-5 SCALE: 1-1/2"= 1'-0"

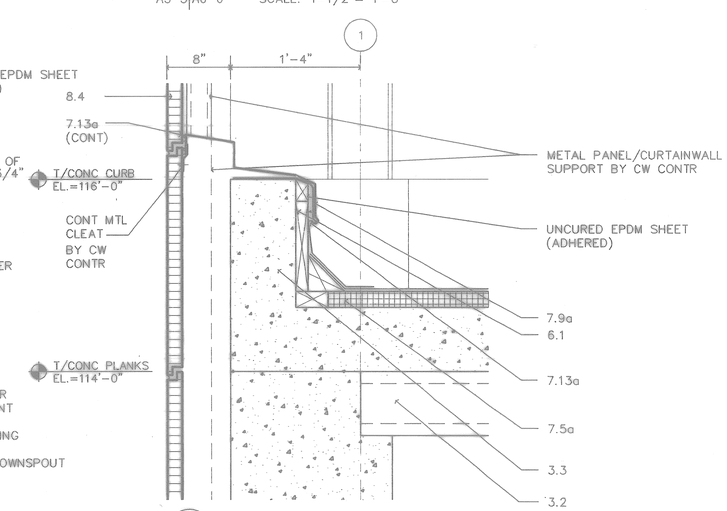


6 SECTION DETAIL
A5-6|A6-6 SCALE: 1-1/2"= 1'-0"

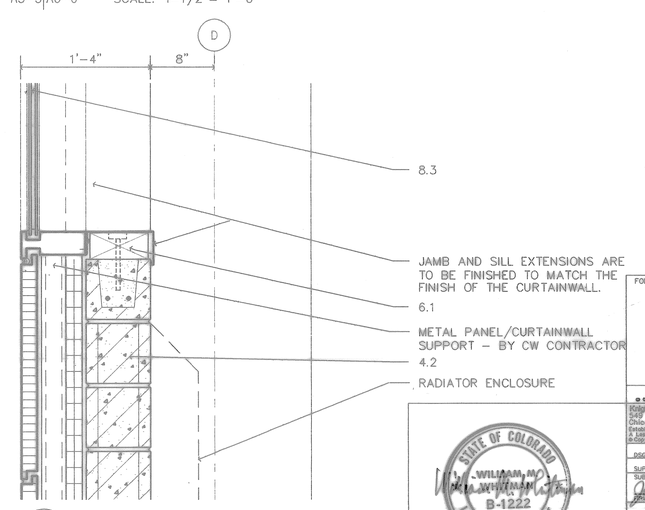


3 SECTION DETAIL
A5-3|A6-6 SCALE: 1-1/2"= 1'-0"

## MATERIAL LEGEND:

3 CONCRETE
3.1 CONCRETE SLAB OVER STEEL DECK
3.2 PRECAST CONCRETE SLAB WITH LIGHTWEIGHT CONCRETE TOPPING
3.3 CAST-IN-PLACE CONCRETE STRUCTURAL SYSTEM.

4 MASONRY
4.1 FACE BRICK 1/4 LAP RUNNING BOND
4.2 CONCRETE MASONRY UNITS (8" UNO)
4.3 CAST STONE COPING
4.4 THROUGH-WALL FLASHING
4.5 WALL TIES

5 METALS
5.1 STRUCTURAL STEEL, PAINTED (PRIMED WHERE CONCEALED)
5.2 PAINTED ARCHITECTURAL EXPOSED STEEL
5.3 PAINTED STEEL HANDRAILS/GUARDRAILS
5.4 EXPANSION JOINT COVER ASSEMBLY
5.5 ALUMINUM HANDRAIL
5.6 LADDER
5.7 SAFETY CHAIN
5.8 SAFETY NOSING @ CONCRETE TREAD
5.9 SAFETY TREAD
5.10 STEEL STAIRS
5.11 MISC STEEL (SEE SHEET A8-3)
5.12 PERFORATED METAL PANEL, PAINTED
5.13 METAL GRATING, PAINTED
5.14 ALUMINUM COLUMN ENCLOSURE

6 WOODS AND PLASTICS
6.1 TREATED WOOD BLOCKING

7 THERMAL AND MOISTURE PROTECTION
7.1 BENTONITE WATERPROOFING
7.2 DAMPPROOFING
7.3 MINERAL FIBER BLANKET THERMAL INSULATION
a. BLANKET BATTS (R-11) FOIL FACED
b. BLANKET BATTS (R-11)
c. SILL SEALER
7.4 BOARD BLOCK INSULATION
a. RIGID INSULATION (R-11)
b. VAPOR RETARDER
7.5 ROOF INSULATION
a. INSULATION BOARD, (MIN, R-20)
b. TAPERED ROOF INSULATION
c. INSULATION CANT
d. VAPOR RETARDER
7.6 NOT USED
7.7 FIRE STOPPING ON RETAINING CLIPS
7.8 MODIFIED BITUMEN SHEET ROOFING
7.9 FLASHING
a. STAINLESS STEEL FLASHING
b. ALUMINUM FLASHING
7.10 METAL REGLET
7.11 ALUMINUM COPING OR SILL
7.12 NOT USED
7.13 SEALANT
a. EXTERIOR SEALANT, 2 LINES W/ BACKSTOPS AT ALL LOCATIONS
b. INTERIOR SEALANT
c. FLOOR JOINT SEALANT

8 DOOR AND WINDOWS
8.1 ALUMINUM DOORS AND FRAMES
8.2 ROLLING SERVICE DOORS
8.3 GLAZED CURTAINWALL SYSTEM
a. CURTAINWALL SUPPORT SYSTEM
8.4 PREFORMED METAL WALL PANELS
8.5 HM DOOR AND FRAME

9 FINISHES
9.1 PORTLAND CEMENT-LIME PLASTER
9.2 METAL SUPPORT SYSTEM
9.3 GYPSUM BOARD
a. REGULAR
b. TYPE "X"
c. GYPSUM BACKING BOARD
d. GYPSUM BACKING BOARD, FOIL FACED
e. WATER RESISTANT GYPSUM BACKING BOARD
f. CEMENTITIOUS BACKER UNITS
9.4 ACOUSTICAL CEILING

10 SPECIALITIES
10.1 METAL WALL LOUVERS W/ INSECT SCREEN
10.2 FLAGPOLE
10.3 LOUVER

11 EQUIPMENT
11.1 FIXED TYPE INDUSTRIAL DOCK LEVELER

12 FURNISHINGS
12.1 RECESSED FLOOR GRILLE AND FRAME
12.2 VENETIAN BLINDS

GRAPHIC SCALE
1' 9" 6" 3" 0' 1' 2'
SCALE 1-1/2" = 1'-0"

FOR OFFICIAL USE ONLY

RECORD DRAWING
DATE 06/05/98

07-31-97 AS-BUILT, NO CORRECTIONS

Kolpa Architects Engineers Planners, Inc.
549 West Randolph Street
Chicago, IL 60661
Established in 1949
A Leader in Kolpa & Associates, Inc. Company
©Copyright 1994 Kolpa Architects Engineers Planners, Inc.

DEPARTMENT OF THE NAVY — NAVAL FACILITIES ENGINEERING COMMAND
SOUTHERN DIVISION
CHARLESTON, S.C.

NAVAL TRAINING CENTER — GREAT LAKES, ILLINOIS

DSGN WARD DR HSU CHK SIRGO
SUPV WHITMAN CH ENGR
SUBMITTED BY — DATE 6/24/94
CHIEF MEMBER TECH
EIC — DR
FPE — DR

# DAMAGE CONTROL SCHOOL
# EXTERIOR WALL DETAILS

STATE OF COLORADO — WILLIAM M. WHITMAN — B-1222 — LICENSED ARCHITECT
ARCH. & ENGR. SEAL

APPROVED — DATE
OFFICER-IN CHARGE
APPROVED — DATE 9/13/94
LED FOR COMMANDER, NAVFAC

| SIZE | CODE IDENT NO. | NAVFAC DRAWING NO. | DRAWING NO. |
|---|---|---|---|
| F | 80091 | 5276497 | A6-6 |
| SCALE 1-1/2"= 1'-0" | | CONSTR CONTR NO. N62467-93-C-1143 | |
| | | SPEC 06-93-1143 | SHEET 72 OF |

P: TTL-BLOK PS Item=0.0
P: TTL-ROOT PS Item=0.0
P: JAPAA606 PS Item=0.0
P: JAGSHT2 MS Item=0.0
P: JAGSHT00 MS Item=0.0

Date&time: 06/24/94 10:28:46 User: AB Filename: P:\PAPER\JAPSA606

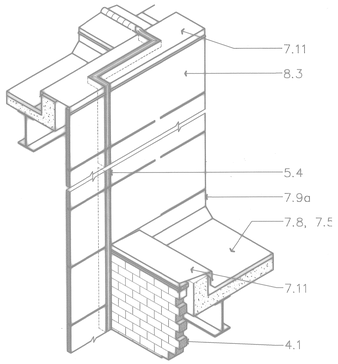


A 6 **ISOMETRIC DETAIL**
A4-1 A6-7
A4-2
SCALE: NO SCALE

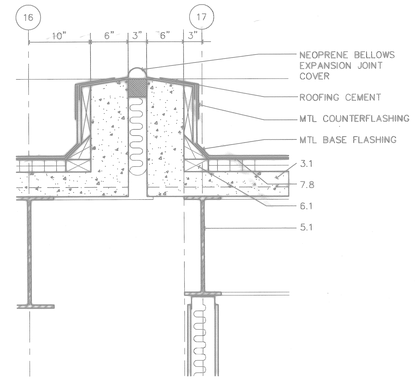


3 **SECTION DETAIL**
A5-5 A6-7
SCALE: 1-1/2"= 1'-0"

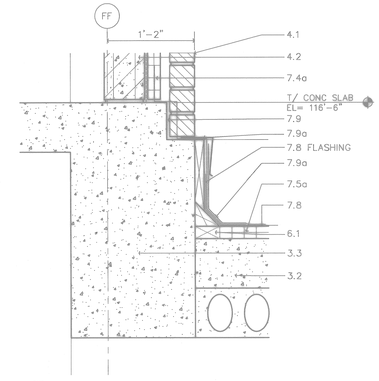


1 **SECTION DETAIL**
A5-2, A5-4 A6-7
SCALE: 1-1/2"= 1'-0"

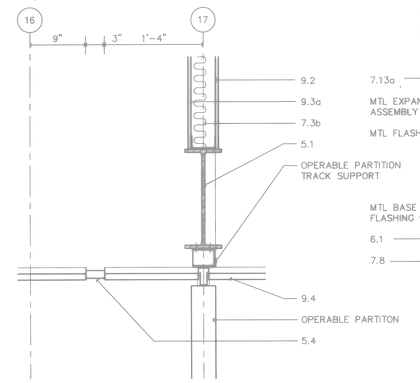


4 **SECTION DETAIL**
A5-5 A6-7
SCALE: 1-1/2"= 1'-0"

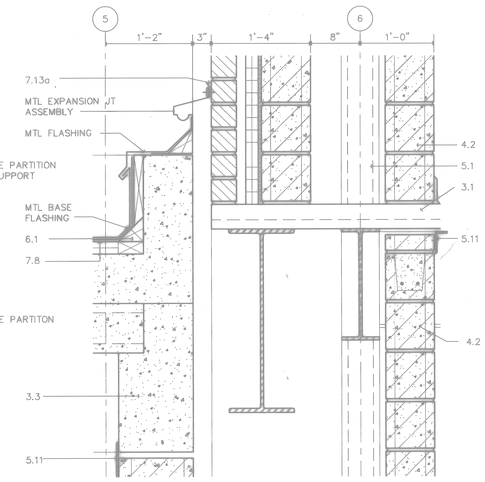


2 **SECTION DETAIL**
A5-5 A6-7
SCALE: 1-1/2"= 1'-0"

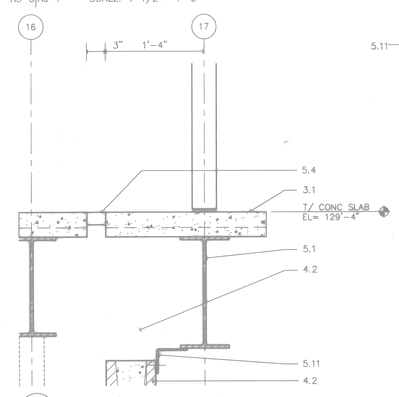


5 **SECTION DETAIL**
A5-5 A6-7
SCALE: 1-1/2"= 1'-0"

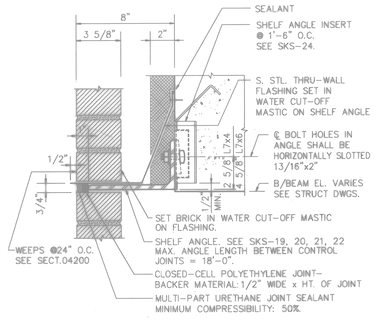


DO NOT CUT BRICKS TO ACCOMODATE SHELF ANGLES. HORIZONTAL JOINTS IN BRICK PANELS ABOVE OR BELOW ANGLES CAN BE COMPRESSED A MAXIMUM OF 1/32" EACH IN ORDER TO MAINTAIN MASONRY ELEVATIONS INDICATED IN CONTRACT DOCUMENTS.

A 7 **SECTION DETAIL**
A4-1 A6-7
A4-2
A4-3
A4-4
SCALE: 3"= 1'-0"

GRAPHIC SCALE
1' 9" 6" 3" 0' 1' 2'
SCALE 1-1/2" = 1'-0"

## MATERIAL LEGEND:

**3 CONCRETE**
3.1 CONCRETE SLAB OVER STEEL DECK
3.2 PRECAST CONCRETE SLAB WITH LIGHTWEIGHT CONCRETE TOPPING
3.3 CAST-IN-PLACE CONCRETE STRUCTURAL SYSTEM.

**4 MASONRY**
4.1 FACE BRICK 1/4 LAP RUNNING BOND
4.2 CONCRETE MASONRY UNITS (8" UNO)
4.3 CAST STONE COPING
4.4 THROUGH-WALL FLASHING
4.5 WALL TIES

**5 METALS**
5.1 STRUCTURAL STEEL, PAINTED (PRIMED WHERE CONCEALED)
5.2 PAINTED ARCHITECTURAL EXPOSED STEEL
5.3 PAINTED STEEL HANDRAILS/GUARDRAILS
5.4 EXPANSION JOINT COVER ASSEMBLY
5.5 ALUMINUM HANDRAIL
5.6 LADDER
5.7 SAFETY CHAIN
5.8 SAFETY NOSING @ CONCRETE TREAD
5.9 SAFETY TREAD
5.10 STEEL STAIRS
5.11 MISC STEEL (SEE SHEET A8-3)
5.12 PERFORATED METAL PANEL, PAINTED
5.13 METAL GRATING, PAINTED
5.14 ALUMINUM COLUMN ENCLOSURE

**6 WOODS AND PLASTICS**
6.1 TREATED WOOD BLOCKING

**7 THERMAL AND MOISTURE PROTECTION**
7.1 BENTONITE WATERPROOFING
7.2 DAMPPROOFING
7.3 MINERAL FIBER BLANKET THERMAL INSULATION
a. BLANKET BATTS (R-11) FOIL FACED
b. BLANKET BATTS (R-11)
c. SILL SEALER
7.4 BOARD BLOCK INSULATION
a. RIGID INSULATION (R-11)
b. VAPOR RETARDER
7.5 ROOF INSULATION
a. INSULATION BOARD, (MIN, R-20)
b. TAPERED ROOF INSULATION
c. INSULATION CANT
d. VAPOR RETARDER
7.6 NOT USED
7.7 FIRE STOPPING ON RETAINING CLIPS
7.8 MODIFIED BITUMEN SHEET ROOFING
7.9 FLASHING
a. STAINLESS STEEL FLASHING
b. ALUMINUM FLASHING
7.10 METAL REGLET
7.11 ALUMINUM COPING OR SILL
7.12 NOT USED
7.13 SEALANT
a. EXTERIOR SEALANT, 2 LINES W/ BACKSTOPS AT ALL LOCATIONS
b. INTERIOR SEALANT
c. FLOOR JOINT SEALANT

**8 DOOR AND WINDOWS**
8.1 ALUMINUM DOORS AND FRAMES
8.2 ROLLING SERVICE DOORS
8.3 GLAZED CURTAINWALL SYSTEM
a. CURTAINWALL SUPPORT SYSTEM
8.4 PREFORMED METAL WALL PANELS
8.5 HM DOOR AND FRAME

**9 FINISHES**
9.1 PORTLAND CEMENT-LIME PLASTER
9.2 METAL SUPPORT SYSTEM
9.3 GYPSUM BOARD
a. REGULAR
b. TYPE "X"
c. GYPSUM BACKING BOARD
d. GYPSUM BACKING BOARD, FOIL FACED
e. WATER RESISTANT GYPSUM BACKING BOARD
f. CEMENTITIOUS BACKER UNITS
9.4 ACOUSTICAL CEILING

**10 SPECIALITIES**
10.1 METAL WALL LOUVERS W/ INSECT SCREEN
10.2 FLAGPOLE
10.3 LOUVER

**11 EQUIPMENT**
11.1 FIXED TYPE INDUSTRIAL DOCK LEVELER

**12 FURNISHINGS**
12.1 RECESSED FLOOR GRILLE AND FRAME
12.2 VENETIAN BLINDS

FOR OFFICIAL USE ONLY

RECORD DRAWING
DATE 06/08/98

| | | |
|---|---|---|
| 1 DATE 07-31-97 ISSUE CORRECTED TO AB-BUILT BY DJB | | |
| Knight Architects Engineers Planners, Inc. 1 South Wacker Drive Street Chicago, IL 60601 Established in 1901 Successor to Knight & Associates, Inc. Company Successor: Hill Hodge Architects Engineers Planners, Inc. | DEPARTMENT OF THE NAVY SOUTHERN DIVISION CHARLESTON, S.C. | NAVAL FACILITIES ENGINEERING COMMAND |
| DSGN WARD CK HSU CHK LORENZ | NAVAL TRAINING CENTER | GREAT LAKES, ILLINOIS |
| SUPV STROUSE DH ENGR | DAMAGE CONTROL SCHOOL EXTERIOR WALL DETAILS | |
| SUBMITTED BY DATE | | |
| FIRM MEMBER TITLE | | |
| EIC BR HD | | |
| FPE DIR | | |
| APPROVED DATE | SIZE F / CODE IDENT NO. 80091 / NAVFAC DRAWING NO. 5276498 | DRAWING NO. A6-7 |
| OFFICER IN CHARGE | | |
| APPROVED DATE | CONSTR CONTR NO. N62467-93-C-1143 | |
| CFD FOR COMMANDER NAVFAC | SCALE 1-1/2"= 1'-0" / SPEC 06-93-1143 | SHEET 73 OF |

ARCH. & ENGR. SEAL

Date&time: 10/30/97 10:41:21 User: TWhite Filename: P:\PAPER\CHANGED\DJS\UAFSA607