ROOM FINISH SCHEDULE

NUMBER	NAME	FLOOR	BASE	WALLS NORTH	EAST	SOUTH	WEST	CEILING	CEILING HEIGHT	REMARKS
B01	BURNER ROOM	–	–	EC	EC	EC	EC	EC	–	
B02	DUCT SPACE	–	–	EC	EC	EC	EC	EC	–	
B03	ESCAPE TRUNK	–	–	EC	EC	EC	EC	EC	–	
B04	CRAWL SPACE	CS	–	EC	EC	EC	EC	EC	–	
B05	STAIR #1	CS	–	PT1	PT1	PT1	PT1	EC	–	
B06	STAIR #3	CS	–	PT1	PT1	PT1	PT1	ECP1	–	
B07	STORAGE	CS	–	PT1	PT1	PT1	PT1	ECP1	–	
B08	ELECTRICAL	CS	–	PT1	PT1	PT1	PT1	ECP1	–	
B09	LAUNDRY	CS	–	PT1	PT1	PT1	PT1	ECP1	–	
B10	MECHANICAL	CS	–	PT1	PT1	PT1	PT1	ECP1	–	
B11	HALL	CS	–	PT1	PT1	PT1	PT1	ECP1	–	
B12	CORRIDOR	CS	–	PT1	PT1	PT1	PT1	ECP1	–	
B13	STAIR #4	CS	–	EC	EC	EC	EC	ECP1	–	
B14	CORRIDOR	CS	–	PT1	PT1	PT1	PT1	ECP1	–	
B15	ELEVATOR MACHINE ROOM	CS	–	PT1	PT1	PT1	PT1	ECP1	–	
B16	PROCESS & WASTE TANKS	CS	–	HBG5	HBG5	HBG5	HBG5	HBG4	–	
B17	CHILLER	CS	–	PT1	PT1	PT1	PT1	ECP1	–	
B18	AREA WELL	–	–	EC	EC	EC	EC	–	–	
B19	TOILET ROOM	CS	–	PT1	PT1	PT1	PT1	ECP1	–	
B20	JANITOR'S CLOSET	CS	–	PT1	PT1	PT1	PT1	ECP1	–	
B21	STAIR #5	CS	–	PT1	PT1	PT1	PT1	ECP1	–	
101	STAGING AREA	CS	–	EC	EC	EC	EC	EC	–	
102	WILD HOSE	RF	RFB	HBG5	HBG5	HBG5	HBG5	HBG3	–	
103	PIT FIRE COMPARTMENT	–	–	EC *	EC *	EC *	EC *	EC *	–	* STL PLATE LINER AND REFR INSUL LINER
104	OBA LOCKER	RF	RFB	HBG5	HBG5	HBG5	HBG5	HBG3	–	
105	VESTIBULE	CS	–	PT1	PT1	PT1	PT1	ECP1	–	
106	ESCAPE TRUNK	–	–	EC	EC	EC	EC	EC	–	
107	ELECTRICAL	CS	–	PT1	PT1	PT1	PT1	ECP1	–	
108	COMPARTMENT #1	GF	–	EC *	EC *	EC *	EC *	EC *	–	* STL PLATE LINER AND REFR INSUL LINER
109	COMPARTMENT #2	GF	–	EC *	EC *	EC *	EC *	EC *	–	* STL PLATE LINER AND REFR INSUL LINER
110	COMPARTMENT #4	GF	–	EC *	EC *	EC *	EC *	EC *	–	* STL PLATE LINER
111	STAIR COMPARTMENT	GF	–	EC	EC	EC	EC	EC	–	
112	COMPARTMENT #3	GF	–	EC *	EC *	EC *	EC *	EC *	–	* STL PLATE LINER
113	ELECTRICAL	CS	–	PT1	PT1	PT1	PT1	ECP1	–	
114	NOT USED	–	–	–	–	–	–	–	–	
115	NOT USED	–	–	–	–	–	–	–	–	
116	CORRIDOR	CS	–	PT1	PT1	PT1	PT1	ECP1	–	
117	STAIR #2	CS	–	PT1	PT1	PT1	PT1	EC	–	
118	STAIR #1	CS	–	PT1	PT1	PT1	PT1	EC	–	
119	TOILET	RF	RFB	HBG1	HBG1	HBG1	HBG1	HBG2	9'-0"	
120	STAIR #3	VCT2	–	PT1	PT1	PT1	PT1	ECP1	–	
121	GEAR ROOM	RF	RFB	HBG1	HBG1	HBG1	HBG1	HBG2	9'-0"	
122	FEMALE STUDENT TOILET	RF	RFB	HBG1	HBG1	HBG1	HBG1	HBG2	9'-0"	
123	MALE STUDENT TOILET	RF	RFB	HBG1	HBG1	HBG1	HBG1	HBG2	9'-0"	
124	MALE STAFF	RF	RFB	HBG1	HBG1	HBG1	HBG1	HBG2	9'-0"	
125	FEMALE STAFF	RF	RFB	HBG1	HBG1	HBG1	HBG1	HBG2	9'-0"	
126	JANITOR'S CLOSET	VCT2	VB1	PT1	PT1	PT1	PT1	ECP1	–	
127	TOILET	RF	RFB	HBG1	HBG1	HBG1	HBG1	HBG2	9'-0"	
128	OFFICE	VCT2	VB1	PT1	PT1	PT1	PT1	ACT1	9'-0"	
129	TOILET	RF	RFB	HBG1	HBG1	HBG1	HBG1	HBG2	9'-0"	
130	FIRST AID	VCT2	VB1	PT1	PT1	PT1	PT1	ACT1	9'-0"	
131	TANK FILLING	CS	–	PT1 *	PT1 *	PT1 *	PT1 *	ECP2	–	* PT3 ABOVE 10'-0" AFF
132	RECEIVING	CS	–	PT1 *	PT1 *	PT1 *	PT1 *	ECP2	–	* PT3 ABOVE 10'-0" AFF
133	SECURITY	VCT2	VB1	PT1	PT1	PT1	PT1	ACT2	9'-4"	
134	CORRIDOR	VCT2	VB1	PT1	PT1	EC	–	GYP	9'-4"	
135	MALE STUDENT TOILET	RF	RFB	HBG1	HBG1	HBG1	HBG1	HBG2	9'-0"	
136	FEMALE STUDENT TOILET	RF	RFB	HBG1	HBG1	HBG1	HBG1	HBG2	9'-0"	
137	JANITOR'S CLOSET	VCT2	VB1	PT1	PT1	PT1	PT1	ECP1	–	
138	ELECTRICAL	VCT2	VB1	PT1	PT1	PT1	PT1	ECP1	–	
139	VESTIBULE	VCT2	–	EC	–	EC	–	GYP	9'-4"	
140	CORRIDOR	VCT2	VB1	PT1	–	PT1	PT1	ACT2	9'-4"	
141	STAIR #4	VCT2	–	EC	EC	EC	EC	ECP1	–	
142	HALL	RF	RFB	HBG1	HBG1	HBG1	HBG1	HBG2	9'-0"	
143	TRAINING AREA	CS	–	PT1 *	PT1 *	PT1 *	PT1 *	ECP2	–	* PT3 ABOVE 25'-0" AFF
144	TRAINING AREA	TC1	–	HBG1	HBG1	HBG1	HBG1	HBG3	–	
145	TRAINING AREA	TC1	–	HBG1	HBG1	HBG1	HBG1	HBG3	–	
146	REPAIR LOCKER	RF	–	HBG1	HBG1	HBG1	HBG1	HBG3	–	
147	STORAGE	RF	–	HBG1	HBG1	HBG1	HBG1	HBG3	–	
148	STAIR #5	CS	–	PT1	PT1	PT1	PT1	ECP1	–	
149	DECONTAMINATION FILTER	RF	–	HBG1	HBG1	HBG1	HBG1	HBG3	–	
150	CONTAMINATION PURGE LOCKER	RF	–	HBG1	HBG1	HBG1	HBG1	HBG3	–	

LEGEND

CS	CONCRETE SEALER	EC	EXPOSED CONSTRUCTION
RF	RESINOUS FLOORING	ECP	EXPOSED CONSTRUCTION PAINTED
RFB	RESINOUS FLOOR BASE	LR	LOCKERS
CPT	CARPET	TP	TOILET PARTITIONS
VCT	VINYL COMPOSITION TILE	SS	STAINLESS STEEL
PL	PLASTIC LAMINATE	CMU	CONCRETE MASONRY UNITS
PT	PAINT	GYP	GYPSUM WALLBOARD
VB	VINYL BASE	HBG	HIGH BUILD GLAZE
ACT	ACOUSTIC CEILING TILE	TC	TRAFFIC COATING
PST	PLASTER	AF	ACCESS FLOORING
GF	GRATE FLOORING		

ROOM FINISH SCHEDULE (CONT.)

NUMBER	NAME	FLOOR	BASE	WALLS NORTH	EAST	SOUTH	WEST	CEILING	CEILING HEIGHT	REMARKS
151	SHOWER	RF	–	HBG1	HBG1	HBG1	HBG1	HBG3	–	
152	INNER C.U.	RF	–	HBG1	HBG1	HBG1	HBG1	HBG3	–	
153	OUTER C.U.	RF	–	HBG1	HBG1	HBG1	HBG1	HBG3	–	
154	STAGING AREA	RF	–	PT1 *	PT1 *	PT1 *	PT1 *	ECP2	–	* PT3 ABOVE 25'-0" AFF
155	STORAGE	CS	–	PT1	PT1	PT1	PT1	ECP1	–	
156	SHOP & STORAGE	CS	–	PT1	PT1	PT1	PT1	ECP1	–	
157	P250 LAB	CS	–	PT1	PT1	PT1	PT1	ACT1	12'-0"	
158	DRESSING PASSAGE	CS	–	HBG1	HBG1	HBG1	HBG1	HBG3	–	
159	VESTIBULE	VCT2	VB1	PT1	–	EC	–	GYP	9'-4"	
160	HAZARDOUS MATERIAL	CS	–	PT3	PT3	PT3	PT3	–	–	
161	TELEPHONE	VCT2	VB1	PT1	PT1	PT1	PT1	ECP1	–	
162	MALE SHOWER	RF	RFB	HBG1	HBG1	HBG1	HBG1	HBG2	9'-0"	
163	MALE SHOWER	RF	RFB	HBG1	HBG1	HBG1	HBG1	HBG2	9'-0"	
164	MALE LOCKER ROOM	RF	RFB	HBG1	HBG1	HBG1	HBG1	HBG2	9'-0"	
165	MALE LOCKER ROOM	RF	RFB	HBG1	HBG1	HBG1	HBG1	HBG2	9'-0"	
M01	ESCAPE TRUNK	–	–	EC	EC	EC	EC	EC	–	
M02	UNDER COMPARTMENT #5	RF	RFB	EC	EC	EC	EC	EC	–	
M03	UNDER COMPARTMENT #6	RF	RFB	EC	EC	EC	EC	EC	–	
M04	UNDER COMPARTMENT #8	RF	RFB	EC	EC	EC	EC	EC	–	
M05	UNDER COMPARTMENT #7	RF	RFB	EC	EC	EC	EC	EC	–	
M06	STAIR #2	CS	–	PT1	PT1	PT1	PT1	EC	–	
M07	STAIR #1	CS	–	PT1	PT1	PT1	PT1	EC	–	
201	ELECTRICAL	CS	–	PT1	PT1	PT1	PT1	ECP1	–	
202	ESCAPE TRUNK	–	–	EC	EC	EC	EC	EC	–	
203	COMPARTMENT #5	GF	–	EC *	EC *	EC *	EC *	EC *	–	* STL PLATE LINER AND REFR INSUL LINER
204	COMPARTMENT #6	GF	–	EC *	EC *	EC *	EC *	EC *	–	* STL PLATE LINER
205	COMPARTMENT #8	GF	–	EC *	EC *	EC *	EC *	EC *	–	* STL PLATE LINER
206	COMPARTMENT #7	GF	–	EC *	EC *	EC *	EC *	EC *	–	* STL PLATE LINER
207	STAGE COMPARTMENT	GF	–	EC	EC	EC	EC	EC	–	
208	STAIR COMPARTMENT	GF	–	EC	EC	EC	EC	EC	–	
209	CORRIDOR	CS	–	PT1	PT1	PT1	PT1	ECP1	–	
210	CORRIDOR	CS	–	PT1	PT1	PT1	PT1	ECP1	–	
211	STAIR #1	CS	–	PT1	PT1	PT1	PT1	ECP1	–	
212	STAIR #2	CS	–	PT1	PT1	PT1	PT1	ECP1	–	
213	ELECTRICAL	CS	–	PT1	PT1	PT1	PT1	ECP1	–	
214	CLASSROOM	VCT2	VB1	PT1	PT1	PT1	PT1	ACT1	9'-0"	WEEK 7 & 8 CLASSROOM
215	OFFICE	CPT	VB2	PT1	PT1	PT1	PT1	ACT1	9'-0"	
216	OFFICE	CPT	VB2	PT1	PT1	PT1	PT1	ACT1	9'-0"	
217	OFFICE	CPT	VB2	PT1	PT1	PT1	PT1	ACT1	9'-0"	
218	OPEN OFFICE	CPT	VB2	PT1	PT1	PT1	PT1	ACT1	9'-0"	
219	OFFICE	CPT	VB2	PT1	PT1	PT1	PT1	ACT1	9'-0"	
220	OFFICE	CPT	VB2	PT1	PT1	PT1	PT1	ACT1	9'-0"	
221	LOUNGE	CPT	VB2	PT1	PT1	PT1	PT1	ACT1	9'-0"	
222	FEMALE STAFF	RF	RFB	HBG1	HBG1	HBG1	HBG1	HBG2	9'-0"	
223	MALE STAFF	RF	RFB	HBG1	HBG1	HBG1	HBG1	HBG2	9'-0"	
224	TELEPHONE	VCT2	VB1	PT1	PT1	PT1	PT1	ECP1	–	
225	JANITOR'S CLOSET	VCT2	VB1	PT1	PT1	PT1	PT1	ECP1	–	
226	ELECTRICAL	VCT2	VB1	PT1	PT1	PT1	PT1	ECP1	–	
227	CLASSROOM	VCT2	VB1	PT1	PT1	PT1	PT1	ACT1	9'-0"	WEEK 2 CLASSROOM
228	CORRIDOR	*	VB1	PT1	PT1	PT1	PT1	ACT2	10'-0"	
229	STAIR #4	VCT2	–	EC	EC	EC	EC	ECP1	–	
230	STAIR #3	VCT2	–	PT1	PT1	PT1	PT1	ECP1	–	
231	CLASSROOM	VCT2	VB1	PT1	PT1	PT1	PT1	ACT1	9'-0"	WEEK 5 & 8 CLASSROOM
232	PREP ROOM	RF	RFB	HBG1	HBG1	HBG1	HBG1	HBG2	9'-0"	SEAL PERIMETER AT FLOOR AND ROOF
233	MEDIA	VCT2	VB1	PT1	PT1	PT1	PT1	ACT1	9'-0"	
234	CONFIDENCE CHAMBER	RF	RFB	HBG1	HBG1	HBG1	HBG1	HBG2	9'-0"	SEAL PERIMETER AT FLOOR AND ROOF
235	STAIR #5	VCT2	–	PT1	PT1	PT1	PT1	ECP1	–	
236	NOT USED	–	–	–	–	–	–	–	–	
237	CORRIDOR	VCT2	VB1	PT1	PT1	PT1	PT1	ACT2	10'-0"	
238	REPAIR LOCKER	RF	RFB	HBG1	HBG1	HBG1	HBG1	HBG3	–	
239	REPAIR LOCKER	RF	RFB	HBG1	HBG1	HBG1	HBG1	HBG3	–	
240	TRAINING AREA	TC1	HBG5	HBG1	HBG1	HBG1	HBG1	HBG3	–	
241	TRAINING AREA	TC1	HBG5	HBG1	HBG1	HBG1	HBG1	HBG3	–	
242	CONTROL ROOM	RF	RFB	HBG1	HBG1	HBG1	HBG1	HBG3	–	
243	STORAGE	VCT2	VB1	PT1	PT1	PT1	PT1	ACT1	9'-0"	

GENERAL NOTES

1. REFER TO SHEET A7-2 FOR ROOM FINISH NOTES.

FOR OFFICIAL USE ONLY

RECORD DRAWING
DATE 06/08/98

DATE 07-31-97 AS-BUILT, NO CORRECTIONS BY ____ INITIAL W.M.W.

Knight Architects Engineers Planners, Inc.
549 West Randolph Street
Chicago, IL 60661
Established in 1945
A Lester B. Knight & Associates, Inc. Company
© Copyright 1994 Knight Architects Engineers Planners, Inc.

DEPARTMENT OF THE NAVY — NAVAL FACILITIES ENGINEERING COMMAND
SOUTHERN DIVISION
CHARLESTON, S.C.

NAVAL TRAINING CENTER — GREAT LAKES, ILLINOIS

DAMAGE CONTROL SCHOOL
ROOM FINISH SCHEDULES

DSGN WARD DR WARD CHK LORENZ
SUPV WHITMAN CH ENGR
SUBMITTED BY — FIRM MEMBER TITLE — DATE 8/31/94
EIC — BR HD
FPE — DIR
APPROVED — DATE
OFFICER IN CHARGE
APPROVED — DATE 9/13/94
EFD FOR COMMANDER, NAVFAC

STATE OF COLORADO — WILLIAM M. WHITMAN — B-1222 — LICENSED ARCHITECT
ARCH. & ENGR. SEAL

SIZE F | CODE IDENT NO. 80091 | NAVFAC DRAWING NO. 5276499 | DRAWING NO. A7-1
CONSTR CONTR NO. N62467-93-C-1143
SCALE NONE | SPEC 06-93-1143 | SHEET 74 OF

P: TTL-BLCK PS ins=0,0
P: TTL-KNGT PS ins=0,0
P: JAPAA701 PS ins=0,0

Date&time: 08/24/94 12:06:35 User: MAW Filename: P:\PAPER\JAPSA701

COLOR / MATERIAL SCHEDULE

MARK	DESCRIPTION	SIZE	COLOR – STYLE	MANUFACTURER	SPEC.SECTION
FLOORING MATERIALS					
CS	CONCRETE SEALER	–	CLEAR	AS SPECIFIED	
RF	RESINOUS FLOORING	–	HRI–211	STONSHIELD	09670
CPT	CARPET	–	CAY – HARBOUR	MANNINGTON	09680
VCT2	VINYL COMPOSITION TILE	12"x12"	129 PUTTY	MANNINGTON	09660
HBG5	CUSTOM COLOR PAINT HIGH BUILD GLAZE	–		AS SPECIFIED	09815
AF1	ACCESS FLOORING	24"x24"	PL2	AS SPECIFIED	10270
TC1	TRAFFIC COATING	–	GREY	NEOGARD	07570
PAINT COLORS					
PT1	CUSTOM COLOR PAINT	–	#969	BENJAMIN MOORE	09900
PT2	CUSTOM COLOR PAINT	–	COLOR TO MATCH VB1	AS SPECIFIED	09900
PT3	CUSTOM COLOR PAINT	–	DOLPHIN SW 1034 LRV 25%	SHERWIN WILLIAMS	09900
PT4	NON–YELLOWING WHITE PAINT	–	SUPER WHITE MOOR–O–MATIC II	BENJAMIN MOORE	09900
PT5	CUSTOM COLOR PAINT	–	COLOR TO MATCH SEAWOLF UC45074	PPG	09900
PT6	CUSTOM COLOR PAINT	–	STONECUTTER SW 2124	SHERWIN WILLIAMS	09900
HBG1	CUSTOM COLOR PAINT HIGH BUILD GLAZE	–	COLOR TO MATCH PT1	AS SPECIFIED	09815
HBG4	CUSTOM COLOR PAINT HIGH BUILD GLAZE	–	COLOR TO MATCH PT3	AS SPECIFIED	09815
INTERIOR WALL MATERIALS					
CMU	CONCRETE MASONRY UNITS RUNNING BOND, PAINTED	–	AS SCHEDULED	–	04200
WALL BASE MATERIALS					
VB1	VINYL BASE, COVED	4"	14 PUTTY	MANNINGTON	09660
VB2	VINYL BASE, STRAIGHT	4"	14 PUTTY	MANNINGTON	09660
RFB	RESINOUS FLOORING BASE	8"	HRI–211	STONSHIELD	09670
CEILING MATERIALS					
ACT1	SQUARE EDGE LAY–IN ACOUSTIC PANELS	2'X4'	WHITE CORTEGA MINABOARD	ARMSTRONG	09500
ACT2	TEGULAR EDGE LAY–IN ACOUSTIC PANELS	2'X2'	WHITE CORTEGA MINATONE	ARMSTRONG	09500
GYP	GYPSUM BOARD SOFFIT PAINTED	–	PT1	AS SPECIFIED	09250
ECP1	EXPOSED CONSTRUCTION PAINTED	–	PT4	AS SPECIFIED	09900
ECP2	EXPOSED CONSTRUCTION PAINTED	–	PT3	AS SPECIFIED	09900
HBG2	GYPSUM BOARD HIGH BUILD GLAZE	–	PT4	AS SPECIFIED	09815
HBG3	EXPOSED CONSTRUCTION HIGH BUILD GLAZE	–	PT4	AS SPECIFIED	09815
PST	PLASTER PAINTED	–	PT4	AS SPECIFIED	09212

COLOR / MATERIAL SCHEDULE (CONT.)

MARK	DESCRIPTION	SIZE	COLOR – STYLE	MANUFACTURER	SPEC.SECTION
MISCELLANEOUS – INTERIOR					
PL1	PLASTIC LAMINATE	–	MR–5–1T	NEVAMAR	06200
PL2	PLASTIC LAMINATE	–	SG210	PIONITE	06200
LR	LOCKERS	–	HEMLOCK 1479 (P&L)	AS SPECIFIED	10505
TP	TOILET PARTITIONS	–	PT3	AS SPECIFIED	10162
–	WINDOW BLINDS	–	69M DOVE GRAY BALI BLIND	MARATHON CAREY McFALL	12510
–	HANDRAILS/GUARDRAILS	–	PT3	AS SPECIFIED	05500
–	METAL STAIRS	–	PT3	AS SPECIFIED	05500
–	MISCELLANEOUS STEEL	–	PT3	AS SPECIFIED	05500
–	OPERABLE PARTITIONS	–	#201 OFF–WHITE	HUFCOR	10655
–	ELEVATOR DOORS/FRAME	–	PT2	AS SPECIFIED	09900
–	LOUVERS	–	PT1	AS SPECIFIED	10201
EXTERIOR WALL MATERIALS					
–	FACE BRICK	AS SPECIFIED	AS SPECIFIED	AS SPECIFIED	04200
–	CAST STONE	–	TERRA COTTA RED	TERRA COTTA & CAST STONE	03411
–	PREFORMED METAL WALL PANEL	–	SEAWOLF UC45074	PPG DURANAR	08920
WINDOW MATERIALS					
G1/G2	GLASS	–	VE 2–85 GREEN	VIRACON	08800
G1	GLASS	–	CLEAR	AS SPECIFIED	08800
–	MULLIONS	–	SEAWOLF UC45074	PPG DURANAR	08520
MISCELLANEOUS – EXTERIOR					
–	ROLLING SERVICE DOORS	–	PT5	AS SPECIFIED	08331
–	MAN DOORS AND FRAMES	–	PT5	AS SPECIFIED	08110
–	HANDRAILS/GUARDRAILS	–	PT5	AS SPECIFIED	05500
–	COLUMN ENCLOSURES	–	SEAWOLF UC45074	PPG DURANAR	05500
–	ALUMINUM FENCING	–	SEAWOLF UC45074	PPG DURANAR	02832
–	METAL STAIRS	–	PT5	AS SPECIFIED	09900
–	BOLLARDS	–	PT5	AS SPECIFIED	09900
–	LADDERS	–	PT5	AS SPECIFIED	09900
–	MISCELLANEOUS STEEL	–	PT5	AS SPECIFIED	09900
–	WALL LOUVERS	–	SEAWOLF UC45074	PPG DURANAR	10201
–	ALUM COPING AND SILL AT MASONRY WALLS	–	CUSTOM COLOR TO MATCH FACE BRICK COLOR (MATTE FINISH)	AS SPECIFIED	09900
–	ALUM COPING AT PREFORMED METAL WALL PANELS	–	SEAWOLF UC45074	PPG DURANAR	07600

COLOR / MATERIAL LEGEND

CS	CONCRETE SEALER	EC	EXPOSED CONSTRUCTION
RF	RESINOUS FLOORING	ECP	EXPOSED CONSTRUCTION PAINTED
RFB	RESINOUS FLOOR BASE	LR	LOCKERS
CPT	CARPET	TP	TOILET PARTITIONS
VCT	VINYL COMPOSITION TILE	SS	STAINLESS STEEL
PL	PLASTIC LAMINATE	PTB	PAINTED BASE
PT	PAINT	CMU	CONCRETE MASONRY UNITS
VB	VINYL BASE	GYP	GYPSUM WALLBOARD
ACT	ACOUSTIC CEILING TILE	HBG	HIGH BUILD GLAZE
PST	PLASTER	TC	TRAFFIC COATING
GF	GRATE FLOORING	AF	ACCESS FLOORING

COLOR / MATERIAL GENERAL NOTES

1. MANUFACTURER'S PRODUCT DATA IS LISTED FOR COLOR / FINISH / TEXTURE SELECTION PURPOSES ONLY. REFER TO APPLICABLE SPECFICATION SECTIONS FOR TECHNICAL REQUIREMENTS.
2. ALL PIPING, ELECTRICAL CONDUIT AND SHEET METAL DUCTWORK EXPOSED TO VIEW SHALL BE PAINTED PT3 IN AREAS OR ROOMS WITH CEILING TYPE ECP2 AS SCHEDULED UNLESS NOTED OTHERWISE. ALL REMAINING PIPING, ELECTRICAL CONDUIT AND SHEET METAL DUCTWORK EXPOSED TO VIEW SHALL BE PAINTED PT4 UNLESS NOTED OTHERWISE.
NOTE: SPRINKLER HEADS SHALL NOT BE PAINTED.
3. MISCELLANEOUS PAINTED ITEMS NOT LISTED IN THE COLOR / MATERIAL SCHEDULE OR NOTES SHALL BE PAINTED TO MATCH ADJACENT SURFACE.
4. ALL HOLLOW METAL DOORS, FRAMES AND MISCELLANEOUS TRIM SHALL BE PAINTED IN A SEMI–GLOSS FINISH TO MATCH ADJACENT WALL BASE COLOR UNLESS NOTED OTHERWISE.
5. ALL PAINTED REVEALS OR TRIM SHALL BE PAINTED TO MATCH ADJACENT SURFACES. IF A REVEAL SEPARATES TWO COLORS, THE REVEAL SHALL BE PAINTED TO MATCH THE LIGHTER COLOR. THE FINISH SHALL BE SEMI–GLOSS UNLESS NOTED OTHERWISE IN THIS SCHEDULE.
6. ALL PAINTED SURFACES SHALL BE "EGGSHELL" FINISH UNLESS NOTED OTHERWISE. (PROMAR 400 – EG.–SHELL)
7. ALL PAINTED CEILING SURFACES SHALL BE FLAT FINISH UNLESS NOTED OTHERWISE.
8. ALL EXPOSED COLUMNS SHALL BE FINISHED TO MATCH ADJACENT WALLS. ALL INTERIOR EXPOSED STRUCTURAL STEEL AND METAL DECK SHALL BE PAINTED AS SCHEDULED.
9. INTERIOR SEALANT AND CAULKING COLOR SHALL MATCH ADJACENT FINISHED SURFACES.
10. EXTERIOR SEALANT COLOR TO MATCH COLOR OF MORTAR.
11. UNNUMBERED CLOSETS SHALL RECEIVE SAME FINISH AS ROOM ONTO WHICH THEY OPEN.

ROOM FINISH SCHEDULE (CONT.)

NUMBER	NAME	FLOOR	BASE	WALLS NORTH	WALLS EAST	WALLS SOUTH	WALLS WEST	CEILING	CEILING HEIGHT	REMARKS
301	STAGING AREA	RF/GF*	–	EC	EC	EC	EC	EC	–	* RF ON CONC UNDER GF
302	REPAIR LOCKER	RF	RFB	HBG1	HBG1	HBG1	HBG1	HBG2	–	
303	REPAIR LOCKER	RF	RFB	HBG1	HBG1	HBG1	HBG1	HBG2	–	
304	INSTRUCTOR STATION	AF1	VB1	PT1	PT1	PT1	PT1	ACT1	8'–0"	ACCESS FLOORING
305	STAIR #1	CS	–	PT1	PT1	PT1	PT1	ACT1	9'–0"	
306	STAIR #3	CS	–	PT1	PT1	PT1	PT1	ECP1	–	
307	CLASSROOM	VCT2	VB1	PT1	PT1	PT1	PT1	ACT1	9'–0"	WEEK 1 & 6 CLASSROOM
308	CLASSROOM	VCT2	VB1	PT1	PT1	PT1	PT1	ACT1	9'–0"	WEEK 3 & 4 CLASSROOM
309	MALE STUDENT TOILET	RF	RFB	HBG1	HBG1	HBG1	HBG1	HBG2	9'–0"	
310	FEMALE STUDENT TOILET	RF	RFB	HBG1	HBG1	HBG1	HBG1	HBG2	9'–0"	
311	STAIR #3	VCT2	–	PT1	PT1	PT1	PT1	ECP1	–	
312	JANITOR'S CLOSET	VCT2	VB1	PT1	PT1	PT1	PT1	ECP1	–	
313	STAIR #4	VCT2	–	EC	EC	EC	EC	ECP1	–	
314	LABORATORY	VCT2	VB1	PT1	PT1	PT1	PT1	ACT1	9'–0"	
315	STORAGE	VCT2	VB1	PT1	PT1	PT1	PT1	ECP1	–	
316	TELEPHONE	VCT2	VB1	PT1	PT1	PT1	PT1	ECP1	–	
317	ELECTRICAL	VCT2	VB1	PT1	PT1	PT1	PT1	ECP1	–	
318	LAB	VCT2	VB1	PT1	PT1	PT1	PT1	ACT1	9'–0"	
319	CORRIDOR	VCT2	VB1	PT1	PT1	PT1	PT1	ACT2	10'–4"	
320	STAIR #5	VCT2	–	PT1	PT1	PT1	PT1	ACT1	9'–0"	
321	CORRIDOR	VCT2	VB1	PT1	PT1	PT1	PT1	ACT2	10'–4"	
322	LAB	VCT2	VB1	PT1	PT1	PT1	PT1	ACT1	9'–0"	
401	STAIR #1	VCT2	–	EC	EC	EC	EC	ACT1	9'–0"	

Date&time: 08/19/94 15:01:33 User: MAW Filename: P:\PAPER\JAPSA702

P: TTL–BLCK PS ins=0,0
P: TTL–KNGT PS ins=0,0
P: JAPAA702 PS ins=0,0

FOR OFFICIAL USE ONLY

RECORD DRAWING
DATE 06/08/98

DATE 07-31-97 ISSUE AS-BUILT, NO CORRECTIONS BY INITIAL W.M.W.

STATE OF COLORADO
WILLIAM M. WHITMAN
B-1222
LICENSED ARCHITECT

ARCH. & ENGR. SEAL

Knight Architects Engineers Planners, Inc.
549 West Randolph Street
Chicago, IL 60661
Established in 1945
A Lester B. Knight & Associates, Inc. Company
© Copyright 1994 Knight Architects Engineers Planners, Inc.

DSGN WARD DR WARD CHK LORENZ
SUPV WHITMAN CH ENGR
SUBMITTED BY DATE 8/21/94
FIRM MEMBER TITLE
EIC BR
FPE DIR
APPROVED DATE
OFFICER IN CHARGE
APPROVED DATE 9/13/94
EFD FOR COMMANDER, NAVFAC

DEPARTMENT OF THE NAVY NAVAL FACILITIES ENGINEERING COMMAND
SOUTHERN DIVISION
CHARLESTON, S.C.

NAVAL TRAINING CENTER GREAT LAKES, ILLINOIS

DAMAGE CONTROL SCHOOL
ROOM FINISH, COLOR / MATERIAL SCHEDULES

SIZE	CODE IDENT NO.	NAVFAC DRAWING NO.	DRAWING NO.
F	80091	5276500	A7-2

CONSTR CONTR NO. N62467–93–C–1143
SCALE NONE SPEC 06–93–1143 SHEET 75 OF

DOOR SCHEDULE

NO.	TYPE	LABEL	HDWE.	SIZE: WIDTH	SIZE: HEIGHT	SIZE: THK.	SIZE: CONST.	FINISH MATERIAL	FRAME: CONST.	FRAME: FINISH	DETAILS: HEAD	DETAILS: JAMB	DETAILS: SILL	REMARKS
B01A	A	–	2A	3'-0"	7'-2"	1-3/4"	HM	PT5/PT3	HM	PT5/PT3	12/A8-1	13/A8-1	–	
B01B	A	–	2A	3'-0"	7'-2"	1-3/4"	HM	PT5/PT3	HM	PT5/PT3	12/A8-1	13/A8-1	–	
B01C	L	–	–	5'-0"	3'-4"	–	MTL	PT5	MTL	PT5	–	–	–	WIRE MESH GATE DOOR
B03A	A	–	1AGK	3'-4"	3'-10"	1-3/4"	HM	PT3	HM	PT3	5/A8-1(SIM)	6/A8-1(SIM)	–	
B04A	A	–	2A	4'-0"	7'-0"	1-3/4"	HM	PT5/PT3	HM	PT5/PT3	12/A8-1	13/A8-1	–	
B04B	A	C	1AGK	4'-0"	7'-2"	1-3/4"	HM	PT3	HM	PT3	1/A8-1	2/A8-1	–	
B05A	A	–	2B	3'-0"	7'-9"	1-3/4"	HM	PT5/PT3	HM	PT5/PT3	12/A8-1(SIM)	13/A8-1(SIM)	–	
B06A	A	C	3AC	3'-0"	7'-2"	1-3/4"	HM	PT3	HM	PT3	1/A8-1	2/A8-1	–	
B07A	C	C	4B	2 @ 3'-0"	7'-2"	1-3/4"	HM	PT3	HM	PT3	1/A8-1	2/A8-1	–	
B08A	C	C	5	2 @ 3'-0"	7'-2"	1-3/4"	HM	PT3	HM	PT3	1/A8-1	2/A8-1	–	
B08B	C	C	3BC	3'-0"	7'-2"	1-3/4"	HM	PT3	HM	PT3	1/A8-1	2/A8-1	–	
B09A	C	C	6A	2 @ 3'-0"	7'-2"	1-3/4"	HM	PT3	HM	PT3	1/A8-1	2/A8-1	–	
B09B	C	C	6A	2 @ 3'-0"	7'-2"	1-3/4"	HM	PT3	HM	PT3	1/A8-1	2/A8-1	–	
B10A	C	C	4BD	2 @ 3'-0"	7'-2"	1-3/4"	HM	PT3	HM	PT3	1/A8-1	2/A8-1	–	
B10B	A	C	4BC	2 @ 3'-0"	7'-2"	1-3/4"	HM	PT3	HM	PT3	1/A8-1	2/A8-1	–	
B13A	A	C	3BC	3'-0"	7'-2"	1-3/4"	HM	PT3	HM	PT3	1/A8-1	2/A8-1	–	
B14A	C	C	14A	2 @ 3'-0"	7'-2"	1-3/4"	HM	PT3	HM	PT3	1/A8-1	2/A8-1	–	
B15A	A	C	1DGK	4'-0"	7'-2"	1-3/4"	HM	PT3	HM	PT3	1/A8-1	2/A8-1	–	
B17A	C	C	4BD	2@3'-0"	7'-2"	1-3/4"	HM	PT3	HM	PT3	1/A8-1	2/A8-1	–	
B17B	A	–	2A	3'-8"	7'-0"	1-3/4"	HM	PT5/PT3	HM	PT5/PT3	5/A8-1	6/A8-1	15/A8-1	
B17C	H	–	–	8'-0"	8'-0"	–	MTL	PT5/PT3	MTL	PT5/PT3	9/A8-1	10/A8-1	11/A8-1	ROLLING SERVICE INSUL DOOR (MOTORIZED)
B19A	A	C	7A	3'-0"	7'-2"	1-3/4"	HM	PT3	HM	PT3	1/A8-1	2/A8-1	–	
B20A	A	C	1DGK	3'-0"	7'-2"	1-3/4"	HM	PT3	HM	PT3	1/A8-1	2/A8-1	–	
B21A	A	C	1AFH	3'-0"	6'-8"	1-3/4"	HM	PT3	HM	PT3	5/A8-1 SIM	6/A8-1 SIM	–	
101A	A	–	2B	3'-0"	7'-2"	1-3/4"	HM	PT5/PT3	HM	PT5/PT3	–	–	–	
101B	H	–	–	13'-0"	8'-0"	–	MTL	PT5/PT3	MTL	PT5/PT3	6/A6-5	14/A8-2(SIM)	7/A6-5	ROLLING SERVICE INSUL DR CHAIN OPERATED
101C	H	–	–	13'-0"	8'-0"	–	MTL	PT5/PT3	MTL	PT5/PT3	6/A6-5	14/A8-2(SIM)	7/A6-5	ROLLING SERVICE INSUL DR CHAIN OPERATED
102A	–	–	–	3'-0"	7'-8"	–	MTL	PT3	MTL	PT3	–	–	–	REFER TO DETAIL 10/A9-1
104A	A	C	1AFK	3'-0"	7'-2"	1-3/4"	HM	PT3	HM	PT3	1/A8-1	2/A8-1	4/A8-1	
104B	A	B	1AGK	3'-0"	7'-2"	1-3/4"	HM	PT3	HM	PT3	1/A8-1	2/A8-1	4/A8-1	
105A	B	B	1AFH	3'-0"	7'-2"	1-3/4"	HM	PT3	HM	PT3	1/A8-1	2/A8-1	–	
105B	A	–	2A	3'-0"	7'-0"	1-3/4"	HM	PT5/PT3	HM	PT5/PT3	–	–	–	
106A***	A	–	–	22"	66"	–	MTL	PT3	–	PT3	5/A8-2	6/A8-2	7/A8-2	AUTO. CLOSING BLANCED DOOR
107A	A	C	3BC	4'-0"	7'-2"	1-3/4"	HM	PT3	HM	PT3	1/A8-1	2/A8-1	–	
107B	A	C	3BD	4'-0"	7"-2"	1-3/4"	HM	PT3	HM	PT3	1/A8-1	2/A8-1	–	
108A*	J	–	–	26"	66"	–	MTL	PT6	–	PT6	1/A8-2	2/A8-2	3/A8-2(SIM)	QUICK ACTING FLOOD BARRIER DR
108B**	J	–	–	26"	66"	–	MTL	PT6	–	PT6	1/A8-2	2/A8-2	3/A8-2	FLOOD BARRIER DOOR
109A*	J	–	–	26"	66"	–	MTL	PT6	–	PT6	1/A8-2	2/A8-2	3/A8-2(SIM)	QUICK ACTING FLOOD BARRIER DR
109B**	J	–	–	26"	66"	–	MTL	PT6	–	PT6	1/A8-2	2/A8-2	3/A8-2	FLOOD BARRIER DOOR
110A	A	–	1AGK	3'-0"	6'-10"	1-3/4"	HM	PT3	HM	PT3	12/A8-1	13/A8-1	14/A8-1	TEMPERATURE-RISE DOOR
110B	A	–	–	3'-0"	7'-0"	1-3/4"	HM	PT3	HM	PT3	–	–	–	2" x 3" HM FRAME
111A*	J	–	–	26"	66"	–	MTL	PT6	–	PT6	1/A8-2	2/A8-2	3/A8-2	QUICK ACTING FLOOD BARRIER DR
111B*	J	–	–	26"	66"	–	MTL	PT6	–	PT6	1/A8-2	2/A8-2	3/A8-2	QUICK ACTING FLOOD BARRIER DR
112A	A	–	1AGK	3'-0"	6'-10"	1-3/4"	HM	PT3	HM	PT3	12/A8-1	13/A8-1	14/A8-1	TEMPERATURE-RISE DOOR
113A	A	C	3BC	4'-0"	7'-2"	1-3/4"	HM	PT3	HM	PT3	1/A8-1	2/A8-1	–	
113B	A	C	3BD	4'-0"	7'-2"	1-3/4"	HM	PT3	HM	PT3	1/A8-1	2/A8-1	–	
117A	B	B	3B	3'-0"	7'-2"	1-3/4"	HM	PT3	HM	PT3	1/A8-1	2/A8-1	–	
118A	B	B	3AC	3'-0"	7'-2"	1-3/4"	HM	PT3	HM	PT3	1/A8-1	2/A8-1	–	
119A	A	–	7B	3'-0"	7'-2"	1-3/4"	HM	PT2	HM	PT2	1/A8-1	2/A8-1	8/A8-1	
120A	B	C	3AD	3'-0"	7'-2"	1-3/4"	HM	PT2	HM	PT2	1/A8-1	2/A8-1	–	
120B	A	–	2B	3'-0"	6'-10"	1-3/4"	HM	PT5/PT2	HM	PT5/PT2	–	–	–	
121A	D	C	6A	2 @ 3'-0"	7'-2"	1-3/4"	HM	PT2	HM	PT2	1/A8-1	2/A8-1	8/A8-1	
121B	A	B	1BGH	3'-0"	7'-2"	1-3/4"	HM	PT3/PT2	HM	PT3/PT2	1/A8-1	2/A8-1	–	
122A	A	C	1AGH	3'-0"	7'-2"	1-3/4"	HM	PT2	HM	PT2	1/A8-1	2/A8-1	8/A8-1	
122B	A	–	1BGH	3'-0"	7'-2"	1-3/4"	HM	PT2	HM	PT2	1/A8-1	2/A8-1	8/A8-1	
123A	A	C	1AGH	3'-0"	7'-2"	1-3/4"	HM	PT2	HM	PT2	1/A8-1	2/A8-1	8/A8-1	
123B	A	–	1GBK	3'-0"	7'-2"	1-3/4"	HM	PT2	HM	PT2	1/A8-1	2/A8-1	8/A8-1	
124A	A	C	1BGH	3'-0"	7'-2"	1-3/4"	HM	PT2	HM	PT2	1/A8-1	2/A8-1	8/A8-1	
125A	A	C	1BGH	3'-0"	7'-2"	1-3/4"	HM	PT2	HM	PT2	1/A8-1	2/A8-1	8/A8-1	
126A	A	C	1DGK	3'-0"	7'-2"	1-3/4"	HM	PT2	HM	PT2	1/A8-1	2/A8-1	–	
127A	A	–	7	3'-0"	7'-2"	1-3/4"	HM	PT2	HM	PT2	1/A8-1	2/A8-1	8/A8-1	
128A	A	–	1BH	3'-0"	7'-2"	1-3/4"	HM	PT2/PT3	HM	PT2/PT3	1/A8-1	2/A8-1	7/A8-1	
129A	B	–	7	3'-0"	7'-2"	1-3/4"	HM	PT2/PT3	HM	PT2/PT3	1/A8-1	2/A8-1	8/A8-1	
130A	B	C	1BGH	3'-0"	7'-2"	1-3/4"	HM	PT2	HM	PT2	1/A8-1	2/A8-1	–	
131A	C	C	4BC	2 @ 3'-0"	7'-2"	1-3/4"	HM	PT3	HM	PT3	1/A8-1	2/A8-1	–	
132A	C	C	6B	2 @ 3'-0"	7'-10"	1-3/4"	HM	PT3/PT2	HM	PT3/PT2	1/A8-1	2/A8-1	–	
132B	A	–	2A	3'-0"	6'-10"	1-3/4"	HM	PT5/PT3	HM	PT5/PT3	1/A8-1	2/A8-1	–	
132C	H	–	–	8'-0"	9'-4"	–	MTL	PT5/PT3	MTL	PT5/PT3			–	OVERHEAD INSULATED DOOR (MOTORIZED)
133A	B	C	1BFK	3'-0"	7'-2"	1-3/4"	HM	PT2	HM	PT2	1/A8-1	2/A8-1	7/A8-1	
133B	G	C	–	6'-0"	3'-10"	–	MTL	PT2	MTL	PT2	–	–	–	COUNTER SHUTTER
135A	A	C	1AGH	3'-0"	7'-2"	1-3/4"	HM	PT2	HM	PT2	1/A8-1	2/A8-1	8/A8-1	
135B	A	C	1AGK	3'-0"	7'-2"	1-3/4"	HM	PT2	HM	PT2	1/A8-1	2/A8-1	8/A8-1	
136A	A	C	1AGH	3'-0"	7'-0"	1-3/4"	HM	PT2	HM	PT2	1/A8-1	2/A8-1	8/A8-1	
136B	A	C	1AGH	3'-0"	7'-2"	1-3/4"	HM	PT2	HM	PT2	1/A8-1	2/A8-1	8/A8-1	
137A	A	–	1DGK	3'-0"	7'-2"	1-3/4"	HM	PT2	HM	PT2	1/A8-1	2/A8-1	8/A8-1	

DOOR SCHEDULE (CONT.)

NO.	TYPE	LABEL	HDWE.	SIZE: WIDTH	SIZE: HEIGHT	SIZE: THK.	SIZE: CONST.	FINISH MATERIAL	FRAME: CONST.	FRAME: FINISH	DETAILS: HEAD	DETAILS: JAMB	DETAILS: SILL	REMARKS
138A	A	C	5	2 @ 3'-0"	7'-2"	1-3/4"	HM	PT2	HM	PT2	1/A8-1	2/A8-1	–	
139A	F	–	15	2 @ 3'-0"	7'-0"	–	ALUM	PT5	ALUM	PT5	–	–	–	
139B	F	–	15A	2 @ 3'-0"	7'-0"	–	ALUM	PT5	ALUM	PT5	–	–	–	
140A	C	B	8A	2 @ 3'-0"	7'-2"	1-3/4"	HM	PT2/PT3	HM	PT2/PT3	1/A8-1	2/A8-1	3/A8-1	
140B	C	C	8A	2 @ 3'-0"	7'-2"	1-3/4"	HM	PT2/PT3	HM	PT2/PT3	1/A8-1	2/A8-1	3/A8-1	
140C	E	–	16	3'-0"	7'-0"	–	ALUM	PT5	ALUM	PT5	–	–	–	
141A	B	C	3BC	3'-0"	7'-2"	1-3/4"	HM	PT2	HM	PT2	1/A8-1	2/A8-1	–	
142A	A	C	1AGH	3'-0"	7'-2"	1-3/4"	HM	PT3/PT2	HM	PT3/PT2	1/A8-1	2/A8-1	8/A8-1	
144A****	J	–	–	26"	66"	–	MTL	PT6	–	PT6	12/A8-2	12/A8-2	12/A8-2	QUICK ACTING FLOOD BARRIER DR
(A) 144B****	J	–	–	26"	66"	–	MTL	PT6	–	PT6	12/A8-2	12/A8-2	12/A8-2	QUICK ACTING FLOOD BARRIER DR
145A****	J	–	–	26"	66"	–	MTL	PT6	–	PT6	12/A8-2	12/A8-2	12/A8-2	QUICK ACTING FLOOD BARRIER DR
146A****	J	–	–	26"	66"	–	MTL	PT6	–	PT6	9/A8-2	10/A8-2	11/A8-2	QUICK ACTING FLOOD BARRIER DR
147A	A	–	1DK	3'-0"	7'-2"	1-3/4"	HM	PT3	HM	PT3	1/A8-1	2/A8-1	–	
148A	D	C	8B	2 @ 3'-0"	7'-2"	1-3/4"	HM	PT3	HM	PT3	1/A8-1	2/A8-1	–	
148B	C	–	9	2 @ 3'-4"	6'-10"	1-3/4"	HM	PT5/PT3	HM	PT5/PT3	–	–	–	
149A****	J	–	–	26"	66"	–	MTL	PT6	–	PT6	9/A8-2	10/A8-2	11/A8-2	QUICK ACTING FLOOD BARRIER DR
150A****	K	–	–	26"	66"	–	MTL	PT6	–	PT6	12/A8-2	12/A8-2	12/A8-2	QUICK ACTING FLOOD BARRIER DR
150B****	K	–	–	26"	66"	–	MTL	PT6	–	PT6	12/A8-2	12/A8-2	12/A8-2	QUICK ACTING FLOOD BARRIER DR
(A) 151A****	K	–	–	26"	66"	–	MTL	PT6	–	PT6	12/A8-2	12/A8-2	12/A8-2	QUICK ACTING FLOOD BARRIER DR
152A****	K	–	–	26"	66"	–	MTL	PT6	–	PT6	12/A8-2	12/A8-2	12/A8-2	QUICK ACTING FLOOD BARRIER DR
153A****	K	–	–	26"	66"	–	MTL	PT6	–	PT6	9/A8-2	10/A8-2	11/A8-2	QUICK ACTING FLOOD BARRIER DR
154A	C	C	6A	2 @ 3'-0"	7'-2"	1-3/4"	HM	PT3	HM	PT3	1/A8-1	2/A8-1	–	
154B	D	C	14B	2 @ 3'-0"	7'-2"	1-3/4"	HM	PT3	HM	PT3	1/A8-1	2/A8-1	–	
155A	C	–	4BD	2 @ 3'-0"	7'-2"	1-3/4"	HM	PT3	HM	PT3	1/A8-1	2/A8-1	–	
156A	C	C	4AD	2 @ 3'-0"	7'-2"	1-3/4"	HM	PT3	HM	PT3	1/A8-1	2/A8-1	–	
157A	D	C	10	2 @ 3'-0"	7'-2"	1-3/4"	HM	PT3	HM	PT3	1/A8-1	2/A8-1	–	
157B	D	C	10	2 @ 3'-0"	7'-2"	1-3/4"	HM	PT3	HM	PT3			–	
159A	F	–	15	2 @ 3'-0"	7'-0"	–	ALUM	PT5	ALUM	PT5	–	–	–	
159B	B	–	15A	2 @ 3'-0"	7'-0"	–	ALUM	PT5	ALUM	PT5	–	–	–	
160A	M	–	–	2@6'-0"	7'-0"	1-3/4"	ALUM	PT5	ALUM	PT5	16/A8-1	17/A8-1	–	ALUM LOUVER GATES
161A	A	C	1DGK	3'-0"	7'-2"	1-3/4"	HM	PT2	HM	PT2	1/A8-1	2/A8-1	–	
M06A	A	C	1AGK	4'-0"	6'-10"	1-3/4"	HM	PT3	HM	PT3	1/A8-1	2/A8-1	8/A8-1	
M07A	A	C	1AGK	4'-0"	6'-10"	1-3/4"	HM	PT3	HM	PT3	1/A8-1	2/A8-1	8/A8-1	
201A	A	C	3BC	4'-0"	7'-2"	1-3/4"	HM	PT3	HM	PT3	1/A8-1	2/A8-1	–	
201B	A	C	3BC	4'-0"	7'-2"	1-3/4"	HM	PT3	HM	PT3	1/A8-1	2/A8-1	–	
203A	A	–	1AGK	3'-0"	6'-10"	1-3/4"	HM	PT3	HM	PT3	12/A8-1	13/A8-1	14/A8-1	TEMPERATURE-RISE DOOR
203B	L	–	–	3'-0"	7'-0"	–	MTL	–	MTL	–	–	–	–	WIRE MESH DOOR
203C**	J	–	–	26"	66"	–	MTL	PT6	–	PT6	1/A8-2 SIM	2/A8-2 SIM	3/A8-2 SIM	FLOOD BARRIER DOOR
203D*	J	–	–	26"	66"	–	MTL	PT6	–	PT6	1/A8-2	2/A8-2	3/A8-2	QUICK ACTING FLOOD BARRIER DR
203E**	J	–	–	26"	66"	–	MTL	PT6	–	PT6	1/A8-2	2/A8-2	3/A8-2	FLOOD BARRIER DOOR
204A	A	–	1AGK	3'-0"	6'-10"	1-3/4"	HM	PT3	HM	PT3	12/A8-1	13/A8-1	14/A8-1	TEMPERATURE-RISE DOOR
204B*	J	–	–	26"	66"	–	MTL	PT6	–	PT6	1/A8-2	2/A8-2	3/A8-2	QUICK ACTING FLOOD BARRIER DR
204C**	J	–	–	26"	66"	–	MTL	PT6	–	PT6	1/A8-2	2/A8-2	3/A8-2	FLOOD BARRIER DOOR
205A	A	–	3BC	3'-0"	6'-10"	1-3/4"	HM	PT3	HM	PT3	12/A8-1	13/A8-1	14/A8-1	TEMPERATURE-RISE DOOR
205B*	J	–	–	26"	66"	–	MTL	PT6	–	PT6	1/A8-2	2/A8-2	3/A8-2	QUICK ACTING FLOOD BARRIER DR
206A	A	–	1AGK	3'-0"	6'-10"	1-3/4"	HM	PT3	HM	PT3	12/A8-1	13/A8-1	14/A8-1	TEMPERATURE-RISE DOOR
206B*	J	–	–	26"	66"	1-3/4"	MTL	PT6	–	PT6	1/A8-2	2/A8-2	3/A8-2	QUICK ACTING FLOOD BARRIER DR
208A**	J	–	–	26"	66"	–	MTL	PT6	–	PT6	1/A8-2	2/A8-2	3/A8-2	FLOOD BARRIER DOOR
209A	H	–	–	6'-0"	8'-0"	–	HM	–	HM	–	–	–	–	ROLLING SERVICE INSUL DOOR
211A	A	C	3AC	3'-0"	7'-2"	1-3/4"	HM	PT3	HM	PT3	1/A8-1	2/A8-1	–	
212A	A	C	3AC	3'-0"	7'-2"	1-3/4"	HM	PT3	HM	PT3	1/A8-1	2/A8-1	–	
213A	A	C	3BC	4'-0"	7'-2"	1-3/4"	HM	PT3	HM	PT3	1/A8-1 SIM	2/A8-1 SIM	–	
213B	A	C	3BC	4'-0"	7'-2"	1-3/4"	HM	PT3	HM	PT3	1/A8-1 SIM	2/A8-1 SIM	–	
214A	B	C	3BD	3'-0"	7'-2"	1-3/4"	HM	PT2	HM	PT2	1/A8-1	2/A8-1	–	
214B	B	C	3BD	3'-0"	7'-2"	1-3/4"	HM	PT2	HM	PT2	1/A8-1	2/A8-1	–	
214C	A	–	1DK	3'-0"	7'-2"	1-3/4"	HM	PT2	HM	PT2	1/A8-1	2/A8-1	–	
214D	C	–	10	2 @ 3'-0"	7'-2"	1-3/4"	HM	PT2	HM	PT2	1/A8-1	2/A8-1	–	
214E	C	–	10	2 @ 3'-0"	7'-2"	1-3/4"	HM	PT2	HM	PT2	1/A8-1	2/A8-1	–	
214F	C	–	10	2 @ 3'-0"	7'-2"	1-3/4"	HM	PT2	HM	PT2	1/A8-1	2/A8-1	–	
215A	A	–	1BH	3'-0"	7'-2"	1-3/4"	HM	PT2	HM	PT2	1/A8-1	2/A8-1	–	
216A	A	–	1BH	3'-0"	7'-2"	1-3/4"	HM	PT2	HM	PT2	1/A8-1	2/A8-1	–	
217A	A	–	1BH	3'-0"	7'-2"	1-3/4"	HM	PT2	HM	PT2	1/A8-1	2/A8-1	–	
218A	B	C	1BGH	3'-0"	7'-2"	1-3/4"	HM	PT2	HM	PT2	1/A8-1	2/A8-1	–	
218B	B	C	1BGH	3'-0"	7'-2"	1-3/4"	HM	PT2	HM	PT2	1/A8-1	2/A8-1	–	

GENERAL NOTES

1. "*" AFTER DOOR NUMBER DESIGNATION INDICATES BUSHIP NUMBER 805-1400074 FOR QUICK ACTING FLOOD BARRIER DOORS.
2. REFER TO SHEET A7-2 FOR ADDITIONAL ROOM FINISH NOTES.
3. REFER TO DOOR ELEVATION 4/A8-2.
4. "***" AFTER DOOR NUMBER DESIGNATION INDICATES NAVSEA DWG NO. 803-5184129 FOR BALANCED DOOR.
5. COORDINATE ALL DOORS AND DOOR DETAILS TO PROVIDE ADEQUATE CLEARANCE AND FRAME REINFORCEMENT FOR HARDWARE TYPES.
6. ALL UNDERCUT DOORS FOR FINISH FLOORING SHALL BE VERIFIED AND PROPERLY COORDINATED.
7. TYPICAL DOOR BEVEL TO BE 1/8" IN 2" UNLESS SPECIFIED OTHERWISE BY HARDWARE TEMPLATE REQUIREMENTS.
8. "**" AFTER DOOR NUMBER DESIGNATION INDICATES BUSHIP NUMBER 805-1400066 FOR FLOOD BARRIER DOORS.
9. (A) "****" AFTER DOOR NUMBER DESIGNATION INDICATES BUSHIP DRAWING NO. 805-1400056 FOR FLOOD BARRIER DOORS

FOR OFFICIAL USE ONLY

RECORD DRAWING DATE 06/08/98

(A) DATE 07-31-97 ISSUE CORRECTED TO AS-BUILT BY DJS INITIAL W.M.W.

Knight Architects Engineers Planners, Inc.
549 West Randolph Street
Chicago, IL 60661
Established in 1945
A Lester B. Knight & Associates, Inc. Company
© Copyright 1994 Knight Architects Engineers Planners, Inc.

DEPARTMENT OF THE NAVY — NAVAL FACILITIES ENGINEERING COMMAND
SOUTHERN DIVISION
CHARLESTON, S.C.

NAVAL TRAINING CENTER — GREAT LAKES, ILLINOIS

DAMAGE CONTROL SCHOOL
DOOR SCHEDULES

DSGN WARD DR WEINER CHK LORENZ
SUPV WHITMAN CH ENGR
SUBMITTED BY (signature) DATE 8/31/94
FIRM MEMBER/TITLE
EIC (signature) BR HD (signature)
FPE DIR
APPROVED DATE
OFFICER IN CHARGE
APPROVED (signature) DATE 9/13/94
EFD FOR COMMANDER, NAVFAC

STATE OF COLORADO — WILLIAM M. WHITMAN — B-1222 — LICENSED ARCHITECT
ARCH. & ENGR. SEAL

SIZE	CODE IDENT NO.	NAVFAC DRAWING NO.	DRAWING NO.
F	80091	5276501	A7-3

CONSTR CONTR NO. N62467-93-C-1143
SCALE NONE
SPEC 06-93-1143
SHEET 76 OF

Date&time: 08/30/94 10:09:03 User: DJS Filename: P:\PAPER\JAPSA703
P: TTL-BLCK PS ins=0,0
P: TTL-KNGT PS ins=0,0
P: JAPAA703 PS ins=0,0

DOOR SCHEDULE (CONT.)

NO.	TYPE	LABEL	HDWE.	SIZE WIDTH	HEIGHT	THK.	CONST.	FINISH MAT.	FRAME CONST.	FRAME FINISH	DETAILS HEAD	JAMB	SILL	REMARKS
219A	A	–	1BH	3'-0"	7'-2"	1-3/4"	HM	PT2	HM	PT2	1/A8-1	2/A8-1	–	
220A	A	–	1BH	3'-0"	7'-2"	1-3/4"	HM	PT2	HM	PT2	1/A8-1	2/A8-1	–	
221A	A	C	1BGH	3'-0"	7'-2"	1-3/4"	HM	PT2	HM	PT2	1/A8-1	2/A8-1	4/A8-1	
221B	B	–	1BFH	3'-0"	7'-2"	1-3/4"	HM	PT2	HM	PT2	1/A8-1	2/A8-1	–	
222A	A	–	11	3'-0"	7'-2"	1-3/4"	HM	PT2	HM	PT2	1/A8-1	2/A8-1	8/A8-1	
223A	A	–	11	3'-0"	7'-2"	1-3/4"	HM	PT2	HM	PT2	1/A8-1	2/A8-1	8/A8-1	
224A	A	C	1DGH	3'-0"	7'-2"	1-3/4"	HM	PT2	HM	PT2	1/A8-1	2/A8-1	–	
225A	A	C	1DGK	3'-0"	7'-2"	1-3/4"	HM	PT2	HM	PT2	1/A8-1	2/A8-1	–	
226A	A	C	3BC	3'-0"	7'-2"	1-3/4"	HM	PT2	HM	PT2	1/A8-1	2/A8-1	–	
227A	B	C	3BD	3'-0"	7'-2"	1-3/4"	HM	PT2	HM	PT2	1/A8-1	2/A8-1	–	
227B	B	C	3BD	3'-0"	7'-2"	1-3/4"	HM	PT2	HM	PT2	1/A8-1	2/A8-1	–	
227C	A	–	1DK	3'-0"	7'-2"	1-3/4"	HM	PT2	HM	PT2	1/A8-1	2/A8-1	–	
227D	C	–	10	2@3'-0"	7'-2"	1-3/4"	HM	PT2	HM	PT2	1/A8-1	2/A8-1	–	
227E	C	–	10	2@3'-0"	7'-2"	1-3/4"	HM	PT2	HM	PT2	1/A8-1	2/A8-1	–	
227F	C	–	10	2@3'-0"	7'-2"	1-3/4"	HM	PT2	HM	PT2	1/A8-1	2/A8-1	–	
228A	A	–	13B	3'-0"	7'-2"	1-3/4"	HM	PT5/PT2	HM	PT5/PT2	1/A8-1	2/A8-1	–	
228B	D	C	8A	2@3'-0"	7'-2"	1-3/4"	HM	PT2	HM	PT2	1/A8-1	2/A8-1	–	DOUBLE EGRESS
229A	B	C	3AC	3'-0"	7'-2"	1-3/4"	HM	PT2	HM	PT2	1/A8-1	2/A8-1	–	
230A	B	C	3AD	3'-0"	7'-2"	1-3/4"	HM	PT2	HM	PT2	1/A8-1	2/A8-1	–	
231A	D	C	8A	2@ 3'-0"	7'-2"	1-3/4"	HM	PT2	HM	PT2	1/A8-1	2/A8-1	–	
231B	B	C	3BD	3'-0"	7'-2"	1-3/4"	HM	PT2	HM	PT2	1/A8-1	2/A8-1	–	
232A	B	C	1BGK	3'-0"	7'-2"	1-3/4"	HM	PT2	HM	PT2	1/A8-1	2/A8-1	8/A8-1	
232B	B	C	1BGH	3'-0"	7'-2"	1-3/4"	HM	PT2	HM	PT2	1/A8-1	2/A8-1	8/A8-1	
233A	A	–	1BH	3'-0"	7'-2"	1-3/4"	HM	PT2	HM	PT2	1/A8-1	2/A8-1	–	
234A	B	–	1BGK	3'-0"	7'-2"	1-3/4"	HM	PT2	HM	PT2	1/A8-1	2/A8-1	8/A8-1	
234B	B	–	1BGH	3'-0"	7'-2"	1-3/4"	HM	PT2	HM	PT2	1/A8-1	2/A8-1	8/A8-1	
235A	B	C	3AC	3'-0"	7'-2"	1-3/4"	HM	PT2	HM	PT2	1/A8-1	2/A8-1	–	
238A***	J	–	–	26"	66"	–	MTL	PT6	–	PT6	9/A8-2	10/A8-2	11/A8-2	QUICK ACTING FLOOD BARRIER DR
239A***	J	–	–	26"	66"	–	MTL	PT6	–	PT6	9/A8-2	10/A8-2	11/A8-2	QUICK ACTING FLOOD BARRIER DR
240A***	J	–	–	26"	66"	–	MTL	PT6	–	PT6	12/A8-2	12/A8-2	12/A8-2	QUICK ACTING FLOOD BARRIER DR
240B***	J	–	–	26"	66"	–	MTL	PT6	–	PT6	12/A8-2	12/A8-2	12/A8-2	QUICK ACTING FLOOD BARRIER DR
240C****	–	–	–	24"	24"	–	MTL	PT6	–	PT6	–	–	–	WATERTIGHT HATCH W/SCUTTLE
241A***	J	–	–	26"	66"	–	MTL	PT6	–	PT6	12/A8-2	12/A8-2	12/A8-2	QUICK ACTING FLOOD BARRIER DR
241B****	–	–	–	24"	24"	–	MTL	PT6	–	PT6	–	–	–	WATERTIGHT HATCH W/SCUTTLE
241C****	–	–	–	24"	24"	–	MTL	PT6	–	PT6	–	–	–	WATERTIGHT HATCH W/SCUTTLE
242A***	J	–	–	26"	66"	–	MTL	PT6	–	PT6	9/A8-2	10/A8-2	11/A8-2	QUICK ACTING FLOOD BARRIER DR
243A	C	C	4BD	2@3'-0"	7'-2"	1-3/4"	HM	PT2	HM	PT2	1/A8-1	2/A8-1		
301A	H	–	–	15'-4"	9'-0"	–	MTL	PT5/PT3	–	PT5/PT3	13/A8-2	14/A8-2	15/A8-2 SIM	ROLLING SERVICE INSUL DR CHAIN OPERATED
301B	H	–	–	7'-10"	9'-0"	–	MTL	PT5/PT3	–	PT5/PT3	13/A8-2	14/A8-2	15/A8-2	ROLLING SERVICE INSUL DR CHAIN OPERATED
301C	H	–	–	15"-4"	9'-0"	–	MTL	PT5/PT3	–	PT5/PT3	13/A8-2	14/A8-2	15/A8-2	ROLLING SERVICE INSUL DR CHAIN OPERATED
301D*	J	–	–	26"	66"	–	MTL	PT6	–	PT6	1/A8-2	2/A8-2	3/A8-2	QUICK ACTING FLOOD BARRIER DR
301E*	J	–	–	26"	66"	–	MTL	PT6	–	PT6	1/A8-2	2/A8-2	3/A8-2	QUICK ACTING FLOOD BARRIER DR
301F	L	–	–	2'-0"	7'-0"	–	MTL	PT3	MTL	PT3	–	–	–	WIRE MESH GATE
301G	L	–	–	2'-0"	7'-0"	–	MTL	PT3	MTL	PT3	–	–	–	WIRE MESH GATE
302A	A	–	1AGK	3'-0"	7'-2"	1-3/4"	HM	PT3	HM	PT3	1/A8-1	2/A8-1	8/A8-1	
303A	A	–	1AGK	3'-0"	7'-2"	1-3/4"	HM	PT3	HM	PT3	1/A8-1	2/A8-1	8/A8-1	
304A	C	–	4AC	2@3'-0"	7'-2"	1-3/4"	HM	PT3/PT2	HM	PT3/PT2	1/A8-1	2/A8-1	–	
304B	A	–	1BGK	4'-0"	7'-2"	1-3/4"	HM	PT3/PT2	HM	PT3/PT2	1/A8-1	2/A8-1	–	
305A	B	C	1AGK	3'-0"	7'-2"	1-3/4"	HM	PT3	HM	PT3	1/A8-1	2/A8-1	–	
306A	B	C	1AGK	3'-0"	7'-2"	1-3/4"	HM	PT3	HM	PT3	1/A8-1	2/A8-1	–	
307A	B	C	3BD	3'-0"	7'-2"	1-3/4"	HM	PT2	HM	PT2	1/A8-1	2/A8-1	–	
307B	B	C	3BD	3'-0"	7'-2"	1-3/4"	HM	PT2	HM	PT2	1/A8-1	2/A8-1	–	
307C	A	–	10K	3'-0"	7'-2"	1-3/4"	HM	PT2	HM	PT2	1/A8-1	2/A8-1	–	
307D	C	–	10	2@3'-0"	7'-2"	1-3/4"	HM	PT2	HM	PT2	1/A8-1	2/A8-1	–	
307E	C	–	10	2@3'-0"	7'-2"	1-3/4"	HM	PT2	HM	PT2	1/A8-1	2/A8-1	–	
307F	C	–	10	2@3'-0"	7'-2"	1-3/4"	HM	PT2	HM	PT2	1/A8-1	2/A8-1	–	
308A	B	C	3B	3'-0"	7'-2"	1-3/4"	HM	PT2	HM	PT2	1/A8-1	2/A8-1	–	
308B	B	C	3BD	3'-0"	7'-2"	1-3/4"	HM	PT2	HM	PT2	1/A8-1	2/A8-1	–	
308C	A	–	10K	3'-0"	7'-2"	1-3/4"	HM	PT2	HM	PT2	1/A8-1	2/A8-1	–	
308D	C	–	10	2@3'-0"	7'-2"	1-3/4"	HM	PT2	HM	PT2	1/A8-1	2/A8-1	–	
308E	C	–	10	2@3'-0"	7'-2"	1-3/4"	HM	PT2	HM	PT2	1/A8-1	2/A8-1	–	
308F	C	–	10	2@3'-0"	7'-2"	1-3/4"	HM	PT2	HM	PT2	1/A8-1	2/A8-1	–	
309A	A	C	1AGH	3'-0"	7'-2"	1-3/4"	HM	PT2	HM	PT2	1/A8-1	2/A8-1	8/A8-1	
310A	A	C	1AGH	3'-0"	7'-2"	1-3/4"	HM	PT2	HM	PT2	1/A8-1	2/A8-1	8/A8-1	
311A	B	B	3AD	3'-0"	7'-2"	1-3/4"	HM	PT2	HM	PT2	1/A8-1	2/A8-1	–	
312A	A	C	1DGK	3'-0"	7'-2"	1-3/4"	HM	PT2	HM	PT2	1/A8-1	2/A8-1	–	
313A	B	B	3AC	3'-0"	7'-2"	1-3/4"	HM	PT2	HM	PT2	1/A8-1	2/A8-1	–	
314A	D	C	12	2@3'-0"	7'-2"	1-3/4"	HM	PT2	HM	PT2	1/A8-1	2/A8-1	–	
315A	C	–	10	2@3'-0"	7'-2"	1-3/4"	HM	PT2	HM	PT2	1/A8-1	2/A8-1	–	
316A	A	C	1DGH	3'-0"	7'-2"	1-3/4"	HM	PT2	HM	PT2	1/A8-1	2/A8-1	–	
317A	A	C	3BD	3'-0"	7'-2"	1-3/4"	HM	PT2	HM	PT2	1/A8-1	2/A8-1	–	
318A	B	C	1BGH	3'-0"	7'-2"	1-3/4"	HM	PT2	HM	PT2	1/A8-1	2/A8-1	–	
318B	D	C	6A	2@3'-0"	7'-2"	1-3/4"	HM	PT2	HM	PT2	1/A8-1	2/A8-1	–	
318C	A	–	10K	3'-0"	7'-2"	1-3/4"	HM	PT2	HM	PT2	1/A8-1	2/A8-1	–	
318D	C	–	10	2@3'-0"	7'-2"	1-3/4"	HM	PT2	HM	PT2	1/A8-1	2/A8-1	–	
318E	C	–	10	2@3'-0"	7'-2"	1-3/4"	HM	PT2	HM	PT2	1/A8-1	2/A8-1	–	
318F	C	–	10	2@3'-0"	7'-2"	1-3/4"	HM	PT2	HM	PT2	1/A8-1	2/A8-1	–	
320A	B	B	3AC	3'-0"	7'-2"	1-3/4"	HM	PT2	HM	PT2	1/A8-1	2/A8-1	–	
322A	D	C	6A	2@3'-0"	7'-2"	1-3/4"	HM	PT2	HM	PT2	1/A8-1	2/A8-1	–	
322B	B	C	1BGH	3'-0"	7'-2"	1-3/4"	HM	PT2	HM	PT2	1/A8-1	2/A8-1	–	
401A	A	C	13A	3'-0"	6'-4"	1-3/4"	HM	PT5/PT2	HM	PT2/PT5	–	–	–	

GENERAL NOTES

1. "*" AFTER DOOR NUMBER DESIGNATION INDICATES BUSHIP NUMBER 805-1400074 FOR QUICK ACTING FLOOD BARRIER DOORS.
2. "**" AFTER DOOR NUMBER DESIGNATION INDICATES BUSHIP NUMBER 805-1624089 FOR WATERTIGHT HATCHS.
3. REFER TO SHEET A7-2 FOR ADDITIONAL ROOM FINISH NOTES.
4. COORDINATE ALL DOORS AND DOOR DETAILS TO PROVIDE ADEQUATE CLEARANCE AND FRAME REINFORCEMENT FOR HARDWARE TYPES.
5. ALL UNDERCUT DOORS FOR FINISH FLOORING SHALL BE VERIFIED AND PROPERLY COORDINATED.
6. TYPICAL DOOR BEVEL TO BE 1/8" IN 2" UNLESS SPECIFIED OTHERWISE BY HARDWARE TEMPLATE REQUIREMENTS.
7. (A) "***" AFTER DOOR NUMBER DESIGNATION INDICATES BUSHIP DRAWING NUMBER 805-1400056 FOR FLOOD BARRIER DOORS.
8. (A) "****" AFTER DOOR NUMBER DESIGNATION INDICATES BUSHIP DRAWING NUMBER 805-1624090 FOR WATER TIGHT HATCH.

TYPICAL DOOR TYPES

SCALE: NONE

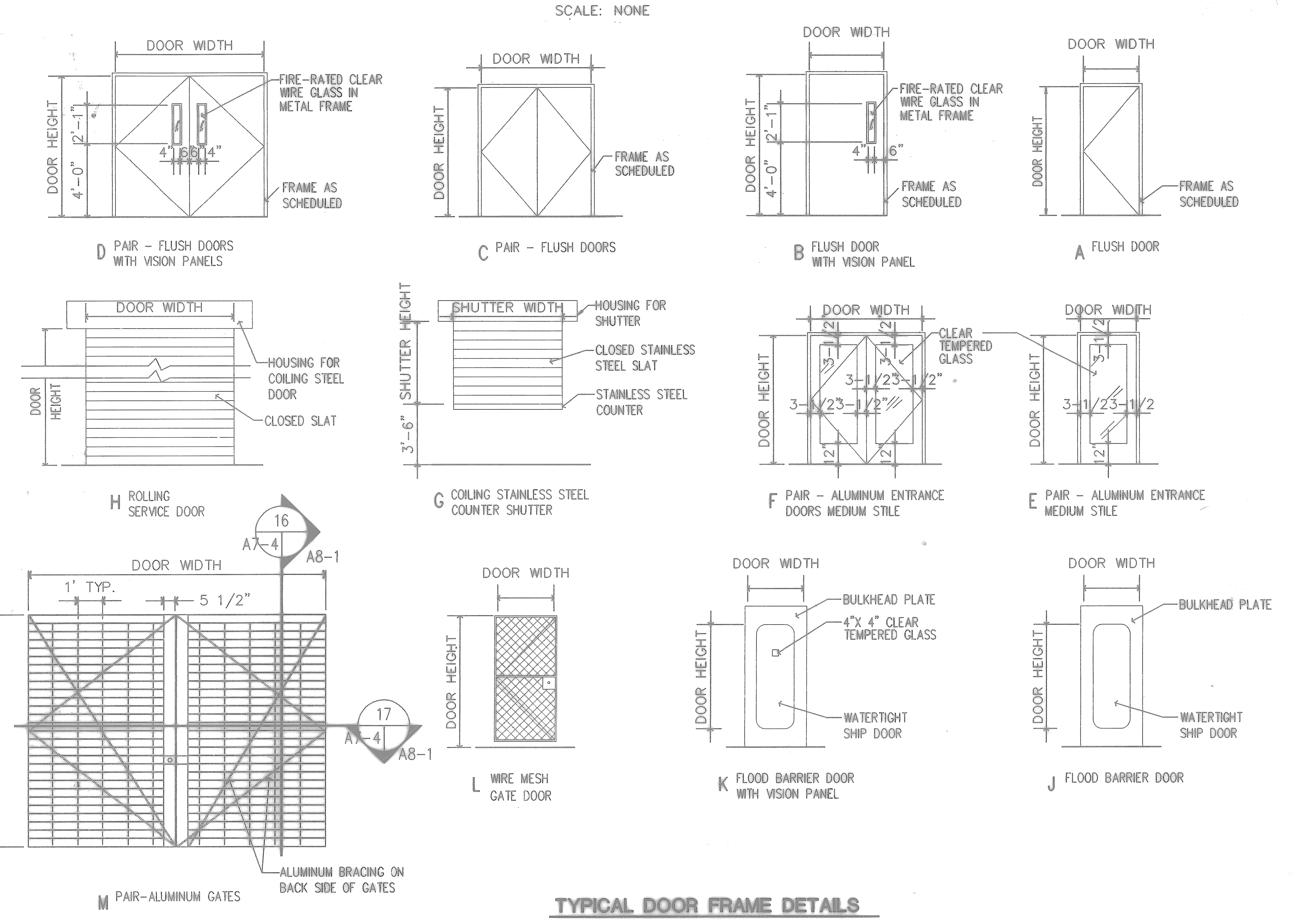

TYPICAL DOOR FRAME DETAILS

SCALE: NONE

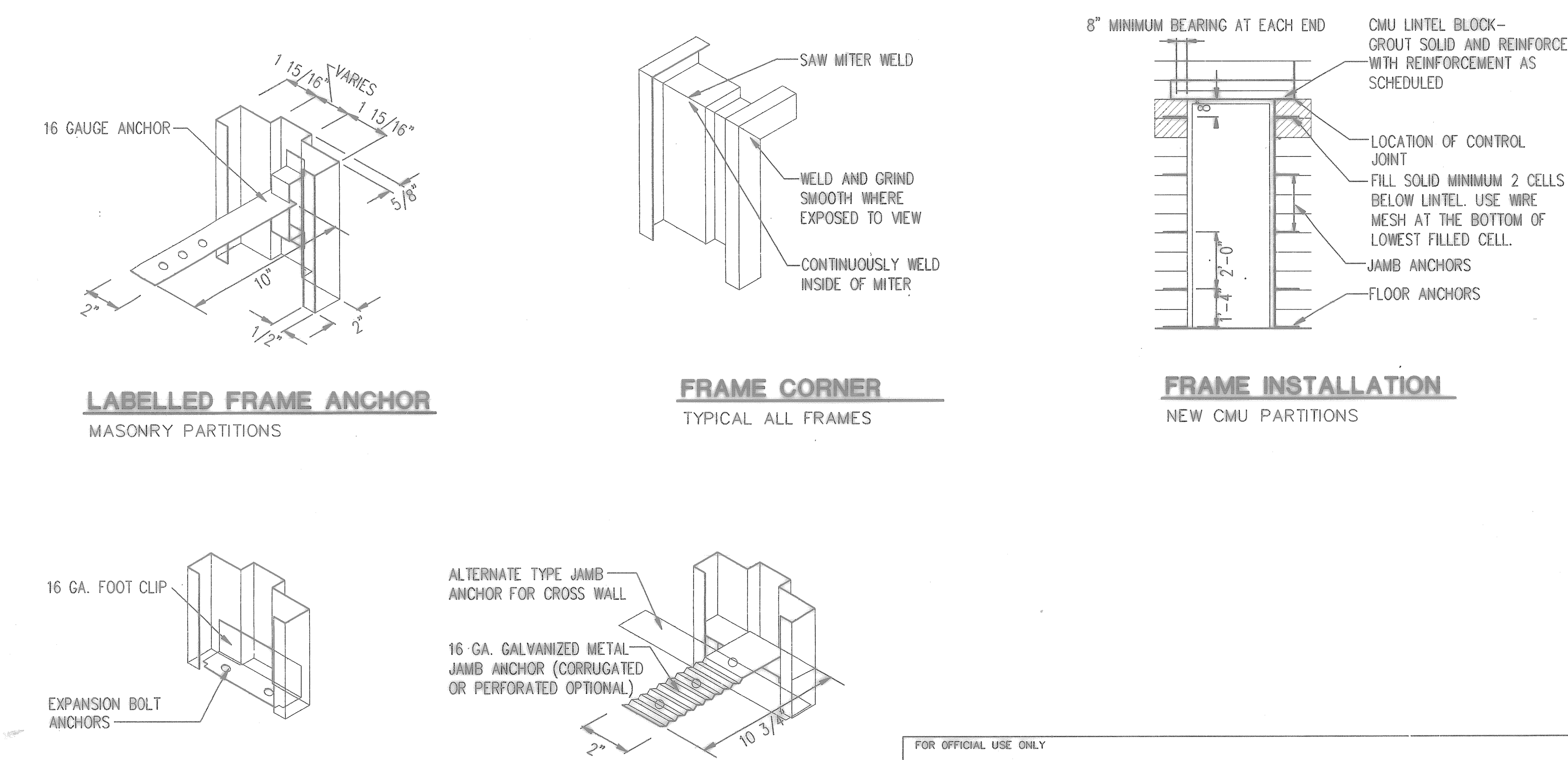

FOR OFFICIAL USE ONLY

RECORD DRAWING
DATE 06/08/98

(A) DATE 07-31-97 DESCR CORRECTED TO AS-BUILT

Knight Architects Engineers Planners, Inc.
549 West Randolph Street
Chicago, IL 60661
Established in 1945
A Lester B. Knight & Associates, Inc. Company
©Copyright 1994 Knight Architects Engineers Planners, Inc.

DSGN WARD DR WEINER CHK LORENZ
SUPV WHITMAN CH ENGR

STATE OF COLORADO WILLIAM M. WHITMAN B-1222 LICENSED ARCHITECT
ARCH. & ENGR. SEAL

DEPARTMENT OF THE NAVY — NAVAL FACILITIES ENGINEERING COMMAND
SOUTHERN DIVISION
CHARLESTON, S.C.
NAVAL TRAINING CENTER — GREAT LAKES, ILLINOIS

DAMAGE CONTROL SCHOOL
DOOR SCHEDULE, DOOR TYPES AND FRAME DETAILS

SIZE F | CODE IDENT NO. 80091 | NAVFAC DRAWING NO. 5276502 | DRAWING NO. A7-4
CONSTR CONTR NO. N62467-93-C-1143
SCALE NONE | SPEC 06-93-1143 | SHEET 77 OF

Date&time: 08/30/94 10:28:07 User: DJS Filename: P:\PAPER\JAPSA704
P: TTL-BLCK PS ins=0,0
P: TTL-KNGT PS ins=0,0
P: JAPAA704 PS ins=0,0
P: JAGDD21 MS ins=0,0

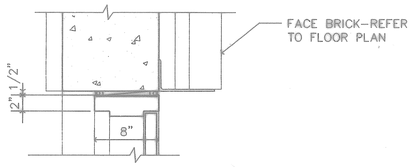

12 **HEAD DETAIL**
A7-3|A8-1 SCALE: 1 1/2"=1'-0"

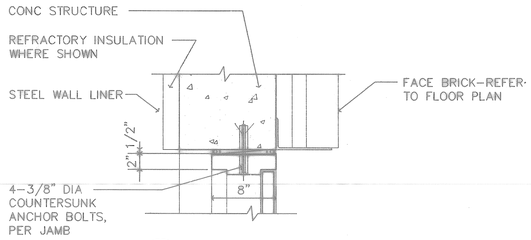

13 **JAMB DETAIL**
A7-3|A8-1 SCALE: 1 1/2"=1'-0"

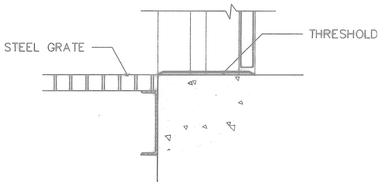

14 **SILL DETAIL**
A7-3|A8-1 SCALE: 1 1/2"=1'-0"

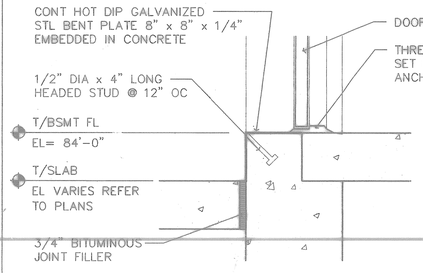

15 **SILL DETAIL**
A2-4|A8-1 SCALE: 1 1/2"=1'-0"

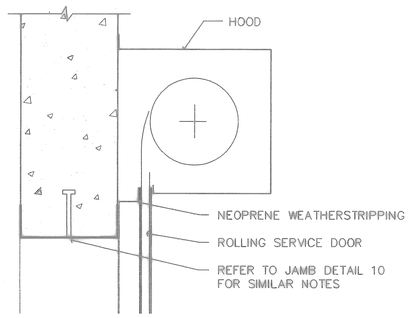

9 **HEAD DETAIL**
A7-3|A8-1 SCALE: 1 1/2"=1'-0"

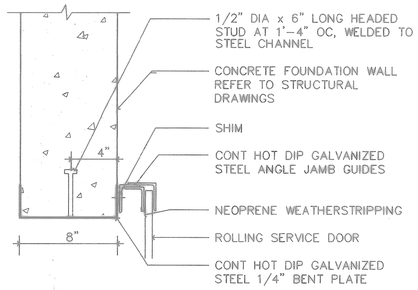

10 **JAMB DETAIL**
A7-3|A8-1 SCALE: 1 1/2"=1'-0"

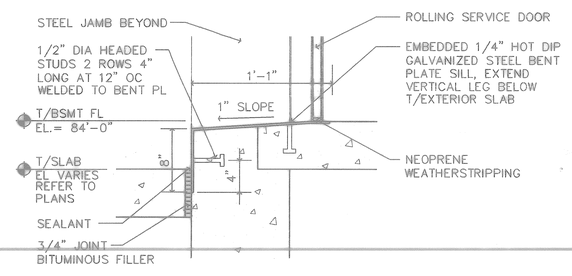

11 **SILL DETAIL**
A7-3|A8-1 SCALE: 1 1/2"=1'-0"

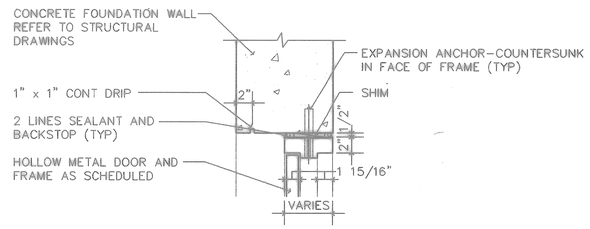

5 **HEAD DETAIL**
A7-3|A8-1 SCALE: 1 1/2"=1'-0"

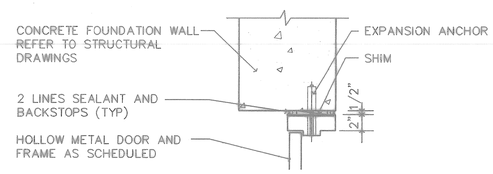

6 **JAMB DETAIL**
A7-3|A8-1 SCALE: 1 1/2"=1'-0"

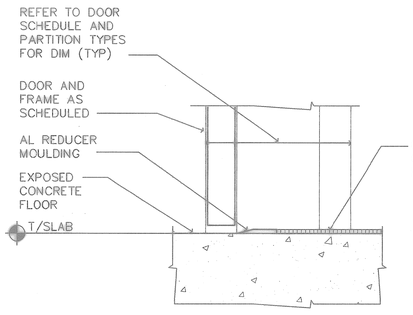

7 **SILL DETAIL**
A7-3|A8-1 3"=1'-0"

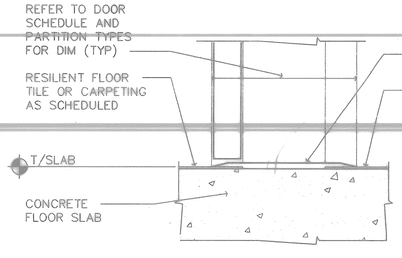

8 **SILL DETAIL**
A7-3|A8-1 3"=1'-0"

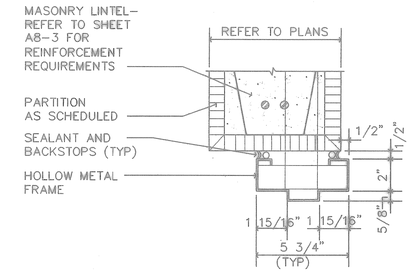

1 **HEAD DETAIL**
A7-3|A8-1 SCALE: 3"=1'

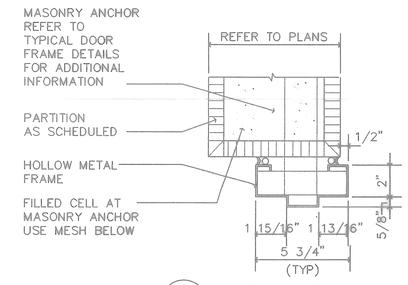

2 **JAMB DETAIL**
A7-4|A8-1 SCALE: 1 1/2"=1'-0"

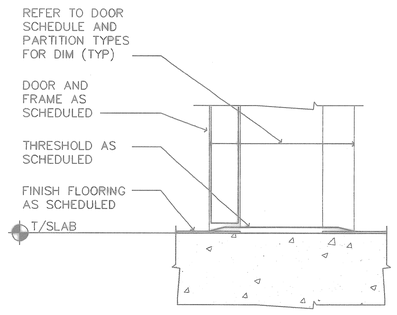

3 **SILL DETAIL**
A7-4|A8-1 3"=1'-0"

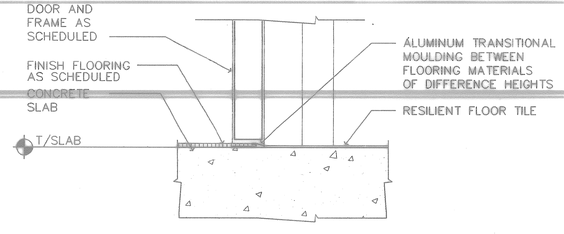

4 **SILL DETAIL**
A7-3|A8-1 3"=1'-0"

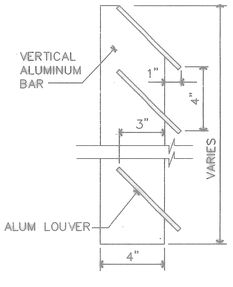

SECTION A

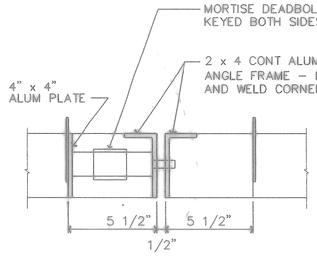

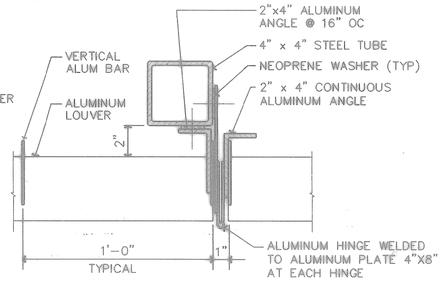

16 **ALUMINUM GRILLEWORK FENCE**
A7-4|A8-1 SCALE: NONE

17 **ALUMINUM GRILLEWORK GATE DETAILS**
A7-4|A8-1 SCALE: NONE

GRAPHIC SCALE
6" 3" 0 1'
SCALE 3" = 1'-0"

GRAPHIC SCALE
1' 9" 6" 3" 0' 1' 2'
SCALE 1-1/2" = 1'-0"

STATE OF COLORADO
WILLIAM M. WHITMAN
B-1222
LICENSED ARCHITECT
ARCH. & ENGR. SEAL

FOR OFFICIAL USE ONLY

RECORD DRAWING
DATE 06/08/98

DATE 07-31-97	STATUS AS-BUILT, NO CORRECTIONS	BY	STAMP 10.11.10.

Kolatis Architects Engineers Planners, Inc.
549 West Randolph Street
Chicago, IL 60661
Established in 1949
A Joint Venture of Kolatis & associates, Inc. Company
© Copyright 1997 Kolatis Architects Engineers Planners, Inc.

DSGN WARD DR MACCO CHK LORENZ
SUPV WHITMAN CH. ENGR
SUBMITTED BY DATE
CPM MGMT DIV
EIC BR HD
TPE DIR
APPROVED DATE
DEFICIENCY CHARGE
APPROVED DATE
ED-TOP CONTROL NAVFAC 9/12/94

DEPARTMENT OF THE NAVY
NAVAL FACILITIES ENGINEERING COMMAND
SOUTHERN DIVISION
CHARLESTON, S.C.

NAVAL TRAINING CENTER GREAT LAKES, ILLINOIS

DAMAGE CONTROL SCHOOL DOOR DETAILS

SIZE	CODE IDENT NO.	NAVFAC DRAWING NO.	DRAWING NO.
F	80091	5276503	A8-1
		CONSTR CONTR NO. N62467-93-C-1143	
SCALE AS NOTED		SPEC 06-93-1143	SHEET 78 OF

Filename: P:\PAPER\JAPS\A801
User: MAW
Date&time: 08/24/94 08:51:16

P: TTL-BLDG PS Ins=0.0	
P: TTL-RMGT PS Ins=0.0	
P: JAPRA801 PS Ins=0.0	
P: JAGB0022 MS Ins=0.0	

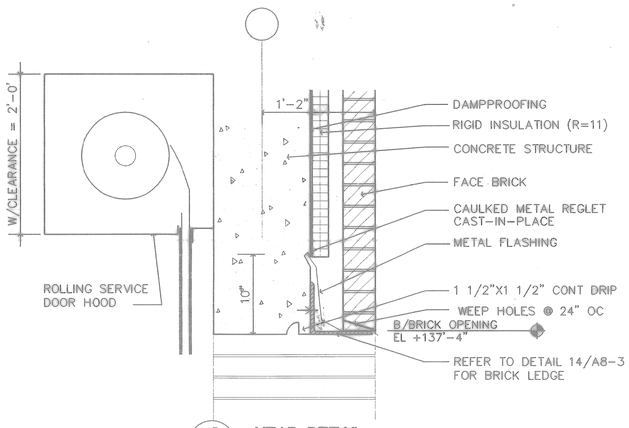

13 **HEAD DETAIL**
A7-4|A8-2 SCALE: 1 1/2"=1'-0"

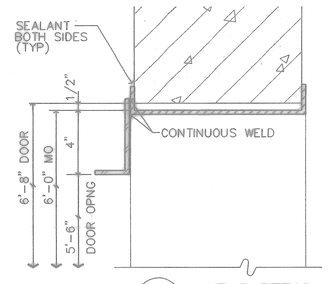

9 **HEAD DETAIL**
A7-3, A7-4|A8-2 SCALE: 3"=1'-0"

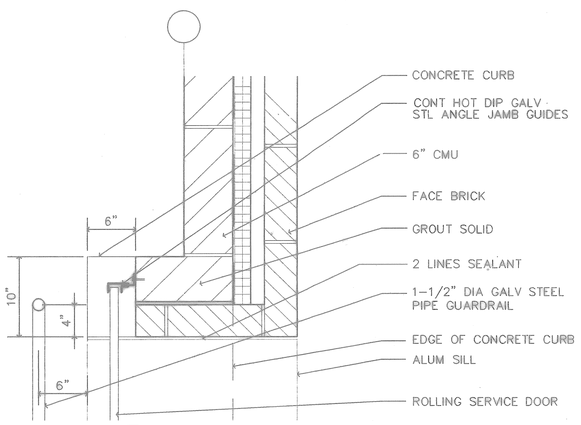

14 **JAMB DETAIL**
A7-4|A8-2 SCALE: 1 1/2"=1'-0"

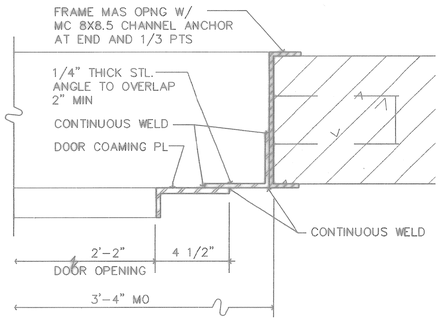

10 **JAMB DETAIL**
A7-3, A7-4|A8-2 SCALE: 3"=1'-0"

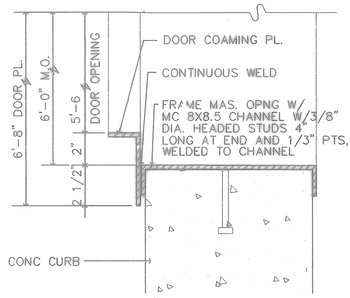

11 **SILL DETAIL**
A7-3, A7-4|A8-2 SCALE: 3"=1'-0"

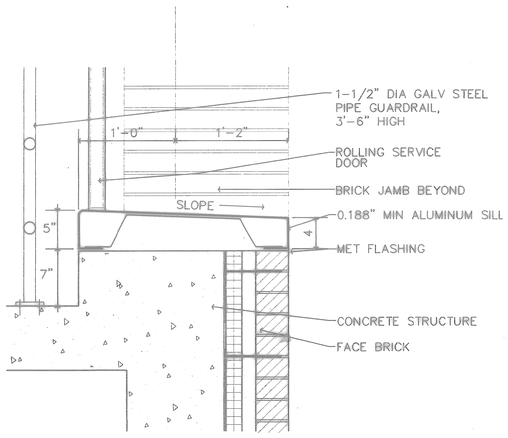

15 **SILL DETAIL**
A7-4|A8-2 SCALE: 1 1/2"=1'-0"

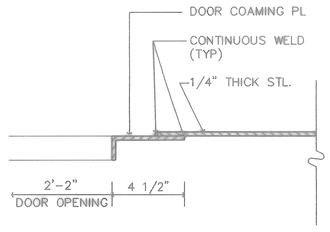

12 **SILL DETAIL (HEAD AND SILL SIM)**
A7-4|A8-2 SCALE: 3"=1'-0"

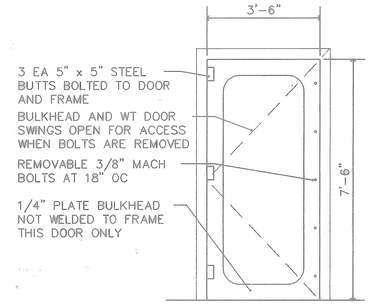

NOTE: "SWING AWAY" BULKHEAD

4 **ELEVATION - DOOR 108A,108B,109A,109B,203E,204C**
A2-1|A8-2 SCALE: 1/2"=1'-0"

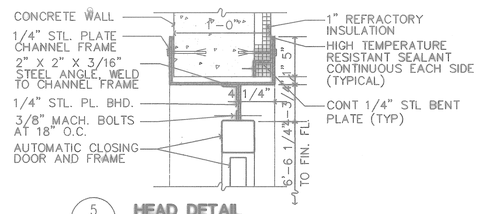

5 **HEAD DETAIL**
A7-3|A8-2 SCALE: 1 1/2"=1'-0"

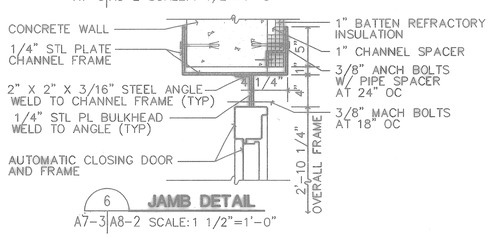

6 **JAMB DETAIL**
A7-3|A8-2 SCALE: 1 1/2"=1'-0"

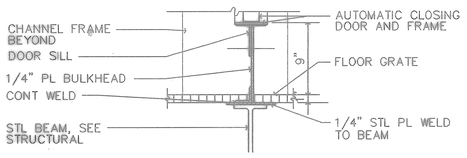

7 **SILL DETAIL**
A7-4|A8-2 SCALE: 1 1/2"=1'-0"

AUTOMATIC CLOSING DOOR DETAILS

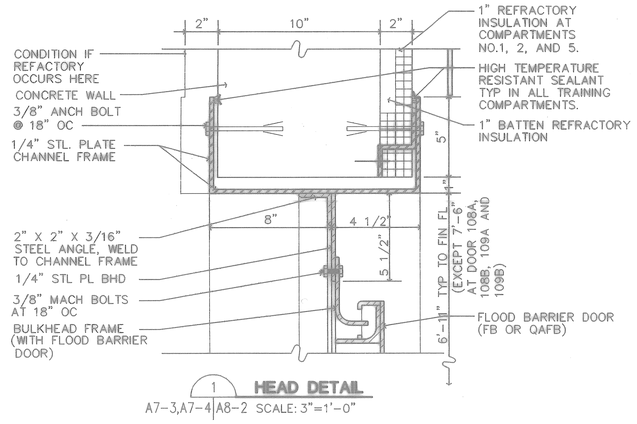

1 **HEAD DETAIL**
A7-3,A7-4|A8-2 SCALE: 3"=1'-0"

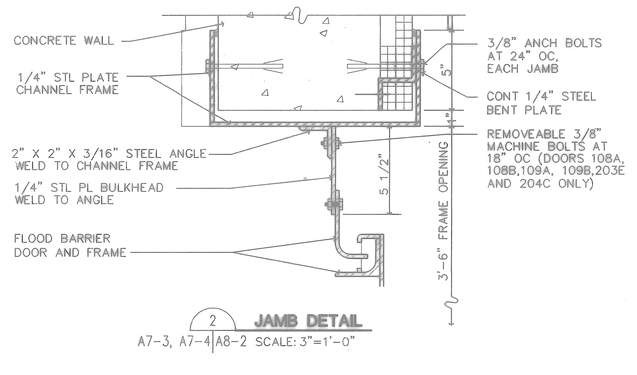

2 **JAMB DETAIL**
A7-3, A7-4|A8-2 SCALE: 3"=1'-0"

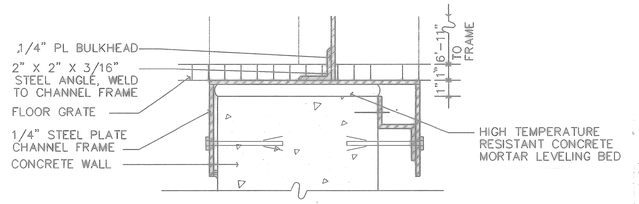

3 **SILL DETAIL**
A7-3, A7-4|A8-2 SCALE: 3"=1'-0"

WATERTIGHT SHIP DOOR DETAILS

NOTE: QUICK ACTIVITY FLOOD BARRIER (QA F B) DOOR SIMILAR.

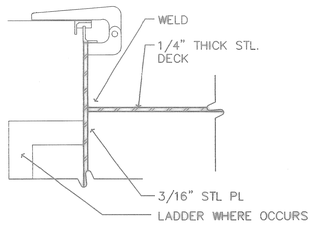

8 **HATCH COAMING CONNECTION**
A8-2 NTS

GRAPHIC SCALE
6" 3" 0 1'
SCALE 3" = 1'-0"

GRAPHIC SCALE
1' 9" 6" 3" 0' 1' 2'
SCALE 1-1/2" = 1'-0"

STATE OF COLORADO
WILLIAM M. WHITMAN
B-1222
LICENSED ARCHITECT
ARCH. & ENGR. SEAL

FOR OFFICIAL USE ONLY

RECORD DRAWING
DATE 06/03/98

DATE 07-31-97 DRAWN AS-BUILT, NO CORRECTIONS BY W.M.W.

Knight Architects Engineers Planners, Inc.
549 West Randolph Street
Chicago, IL 60661
Established in 1946
A Lester B. Knight & Associates, Inc. Company
©Copyright 1997 Knight Architects Engineers Planners, Inc.

DSGN WARD DR MACCO CHK LORENZ
SUPV WHITMAN CH ENGR
SUBMITTED BY DATE
DPW MGMNT TEAM
EIC SR ENGR
FPE OR
APPROVED DATE
OFFICER IN CHARGE
APPROVED DATE
EFD FOR COMMANDER, NAVFAC

DEPARTMENT OF THE NAVY — NAVAL FACILITIES ENGINEERING COMMAND
SOUTHERN DIVISION
CHARLESTON, S.C.
NAVAL TRAINING CENTER — GREAT LAKES, ILLINOIS

DAMAGE CONTROL SCHOOL
DOOR DETAILS

SIZE	CODE IDENT NO.	NAVFAC DRAWING NO.	DRAWING NO.
F	80091	5276504	A8-2
		CONSTR CONTR NO. N62467-93-C-1143	
SCALE AS NOTED		SPEC 06-93-1143	SHEET 79 OF

Filename: P:\PAPER\JAPSA802 User: MAW Datetime: 08/25/94 13:26:16

P: TL-BUSC PS	lvm=0.0		
P: TL-ROUT PS	lvm=0.0		
P: JAPSA802 PS	lvm=0.0		
P: JAGOODA MS	lvm=0.0		
P: JAGOODZA MS	lvm=0.0		

79

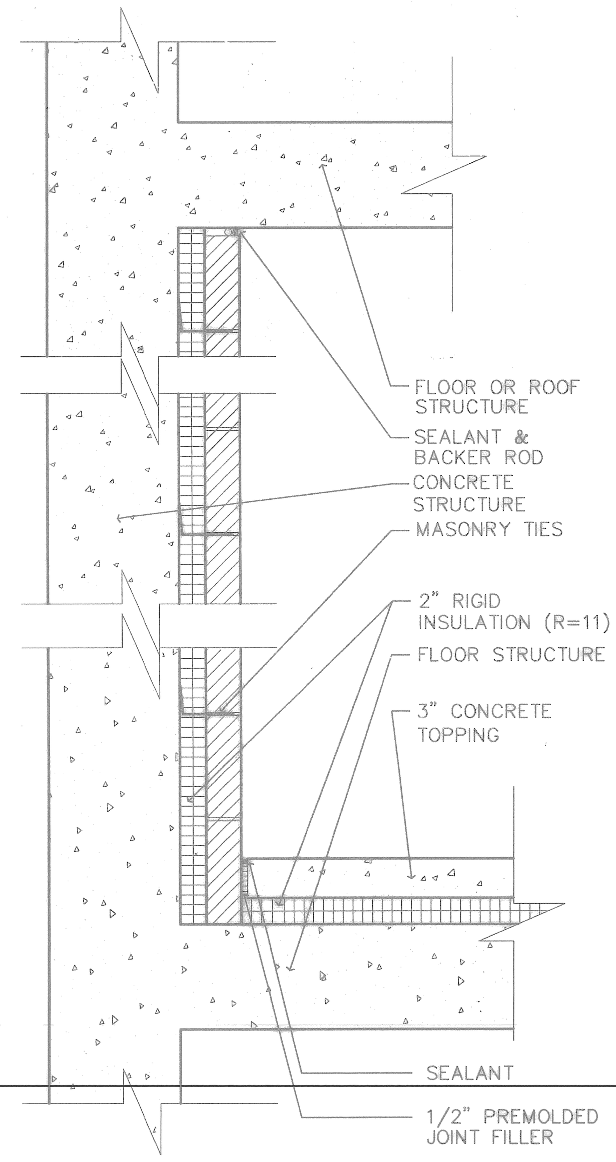

16 **MASONRY PARTITION**
A2-2 A2-3 | A8-3 SCALE: 1 1/2" = 1'-0"

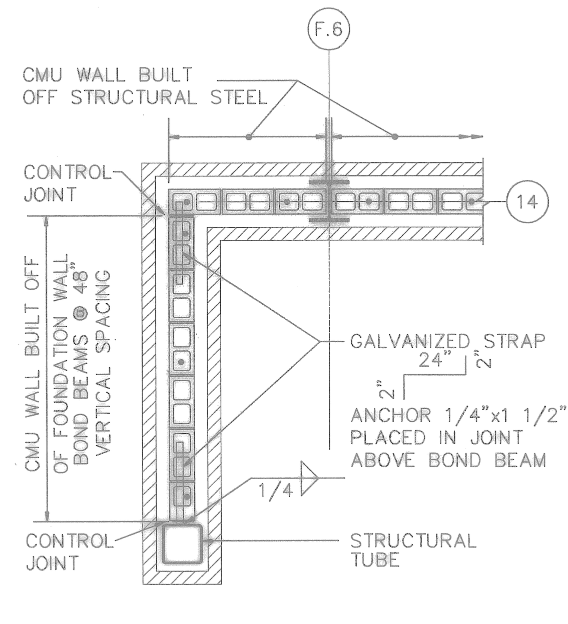

21 **CMU PLAN DETAIL**
A8-3 SCALE: 3/8"=1'-0"

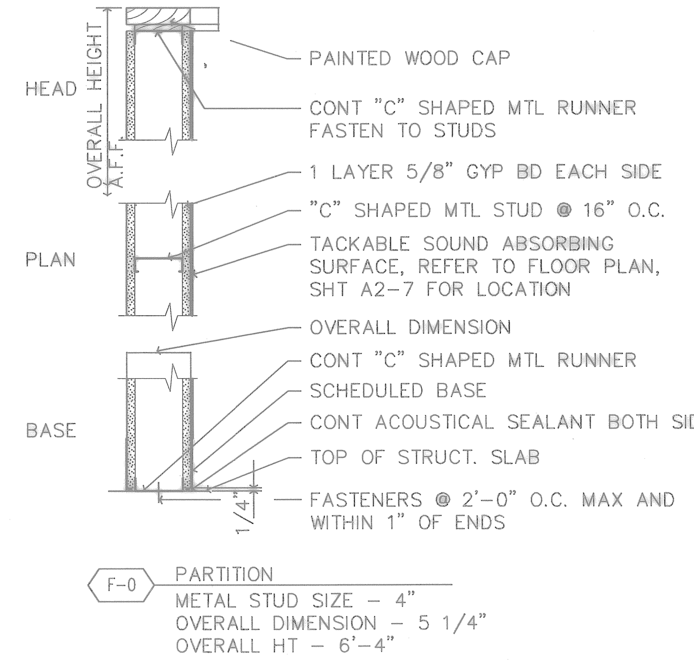

11 **PARTITION**
A2-7 | A8-3 SCALE: 1 1/2" = 1'-0"

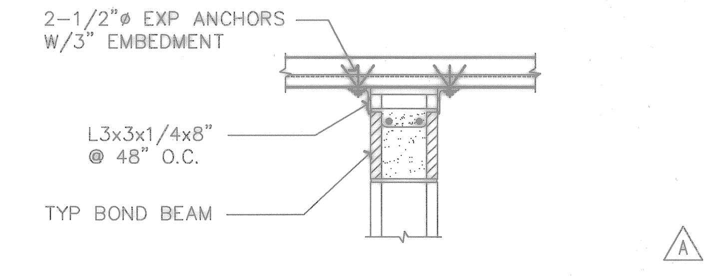

5 **CMU HEAD DETAIL - COMPOSITE DECK**
A8-3 SCALE: 1 1/2" = 1'-0"

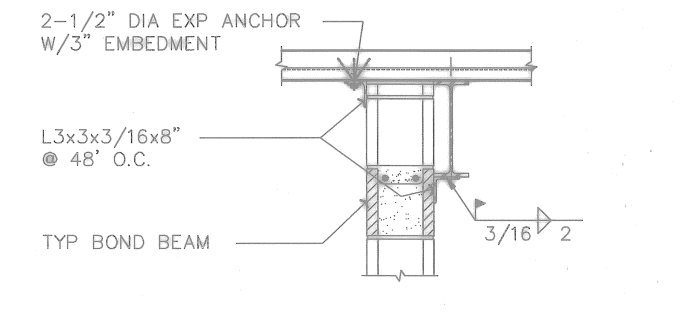

6 **CMU HEAD DETAIL - INT. STEEL BEAM**
A8-3 SCALE: 1 1/2" = 1'-0"

CMU LINTEL SCHEDULE

MASONRY OPENING SIZE	D	REINFORCING
≤ 4'-0"	8"	1-#5
≤ 6'-0"	8"	2-#5
≤ 10'-0"	16"	2-#5
≤ 12'-0"	24"	2-#5
> 12'-0" AND </= 20'-0"	40"	2-#6

LINTEL SCHEDULE NOTES

1. LINTELS SHALL NOT BE SLEEVED, BOXED OUT, OR HAVE THE REINFORCEMENT OR GROUT INTERRUPTED.
2. FORMED-IN-PLACED LINTELS SHALL BE SHORED ALONG THE ENTIRE LENGTH UNTIL THE MASONRY ASSEMBLY HAD ATTAINED THE SPECIFIED COMPRESSIVE STRENGTH.
3. ALL OPENINGS IN MASONRY WALLS SHALL BE BRIDGED BY LINTELS OF A MINIMUM SIZE SHOWN IN CMU LINTEL SCHEDULE.

LINTEL SCHEDULE NOTES FOR LINTELS > 12'-0" AND </= 20'-0"

1. 40" DEEP LINTELS OCCUR AT THREE ELEVATIONS AS FOLLOWS: ALONG COLUMN LINE 21 BETWEEN LINES D.4 AND F (ELEVATION 2/A4-1), ALONG COLUMN LINE GG BETWEEN LINES 6 AND 7 (ELEVATIONS 1, 3/A4-1), AND ALONG LOLUMN LINE LL BETWEEN LINES 2.6 AND 3.3 (ELEVATION 3/A4-1). ALONG COLUMN LINE LL BETWEEN LINES 2.6 AND 3.3, THE FIFTEEN FOOT SPAN LINTEL JUST BELOW THE ROOF BEAM SHALL BE 24" DEEP, REINFORCED WITH 2 – #6 BARS, TOP AND BOTTOM. (A)
2. PROVIDE 2#6 TOP BARS IN LIEU OF 2#4 TOP BARS SHOWN ON DETAIL 3/A8-3.
3. FOR 40" DEEP LINTELS, EXTEND THE LINTEL 16" BEYOND THE MASONRY OPENING AT EA END. EXTEND LINTEL TOP AND BOTTOM REINF IN A BOND BEAM BEYOND THE MASONRY OPENING AS FOLLOWS: 1'-2" AT THE CORNER COLUMN, AND 4'-0" AT THE END OPPOSITE THE CORNER COLUMN, EXCEPT AT COLUMN LL-3.3. AT COLUMN LL-3.3, DRILL AND GROUT 3 – #6 X 2'-6" WITH 6" EMBEDMENT INTO THE CONCRETE COLUMN. CENTER THE BARS ON THE CMU WALL, AND LOCATE THE BARS AT THE 2ND, 3RD, AND 5TH COURSE OF THE LINTEL.
4. REFER TO DETAIL 20/A8-3: PROVIDE ANGLE 8 X 8 X 3/4 WITH A LENGTH EQUAL TO THE CMU WALL THICKNESS. ANCHOR THE ANGLE TO THE CAST-IN-PLACE CONCRETE COLUMN WITH 2 – 5/8" DIAMETER EXPANSION ANCHORS WITH 4" EMBEDMENT. SPACE THE ANCHORS 4" ON CENTER VERTICALLY, CENTERED ON THE CMU WALL.
5. PROVIDE #4 X 3'-0" @ 16" O.C. VERTICAL BARS AT 40" DEEP LINTELS.
6. REFER TO DETAIL 6/A6-2: PROVIDE 2 #5 BARS IN EACH CELL IN LIEU OF 1 #5 SHOWN.
7. REFER TO DETAIL 1/A8-3: AT JAMBS SUPPORTING 40" LINTELS, OPPOSITE THE BUILDING CORNER CONDITION, REINFORCE AND GROUT 3 CELLS

CMU WALL REINFORCING SCHEDULE

f'm=1350 PSI , TYPE S MORTAR

NOMINAL THICKNESS	VERTICAL REINFORCING	MAXIMUM HEIGHT: INTERIOR 10 PSF	MAXIMUM HEIGHT: EXTERIOR 25 PSF
6"	#5@48"	17'	12'
8"	#5@48"	22'	14'
10"	#5@48"	–	16'
6"	#6@24"	–	15'
8"	#6@24"	–	20'
10"	#6@24"	–	23'

NOTES:

1. INTERIOR AND EXTERIOR WALLS SHALL BE REINFORCED HORIZONTALLY AND VERTICALLY IN ACCORDANCE WITH THE ABOVE SCHEDULE, UNO.
2. VERTICAL REINFORCING OF SAME SIZE AS SCHEDULED SHALL BE PLACED AT EACH WALL CORNER OR INTERSECTION, AT BOTH SIDES OF EACH OPENING, AT EACH SIDE OF CONTROL JOINTS, AT ENDS OF WALLS AND AT SPACINGS LISTED IN SCHEDULE.
3. CELLS WITH VERTICAL REINFORCING SHALL BE FULLY GROUTED. BARS SHALL EXTEND FROM BOTTOM TO TOP OF WALL. SPLICES IF REQUIRED SHALL BE 48 BAR DIAMETERS.
4. FOR CANTILEVERED WALLS, USE HALF OF SCHEDULED MAX HEIGHT.
5. JOINT REINFORCING (TRUSS OR LADDER TYPE) IS 1-3/16"ø LONGITUDINAL WIRE PER FACE SHELL, 16" VERTICAL SPACING.
6. PROVIDE INTERMEDIATE BOND BEAM AT 6'-0" MIN. VERTICAL SPACING.
7. SEE F/S2-6 FOR CMU SHEAR WALL REINFORCING.

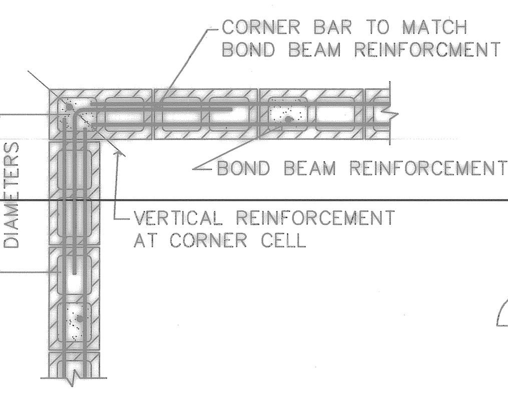

17 **PLAN DETAIL - REINF. WALL CORNER**
A8-3 SCALE: 1 1/2" = 1'-0"

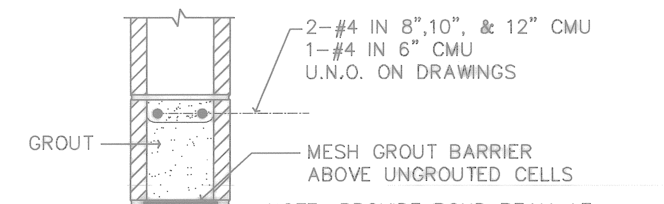

NOTE: PROVIDE BOND BEAM AT ROOF AND FLOOR LEVELS, AT TOP OF WALLS AND BELOW WALL OPENINGS. ALSO PROVIDE INTERMEDIATE BOND BEAMS AT MIN. SPACING LISTED IN WALL REINFORCING SCHEDULE.

12 **BOND BEAM**
A8-3 SCALE: 1 1/2" = 1'-0"

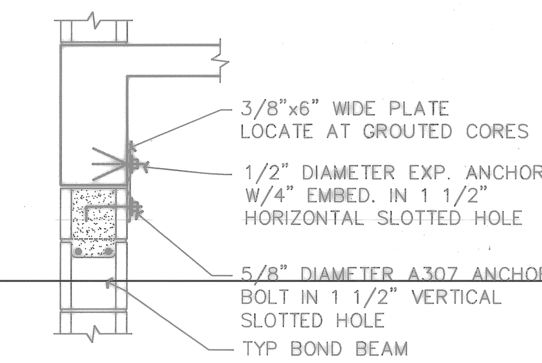

7 **CMU HEAD DETAIL - CONCRETE BEAM**
A8-3 SCALE: 1 1/2" = 1'-0"

RATED CMU PARTITIONS

- B-1 MASONRY PARTITION (1HR)
  UL. DES. #U905
  CMU WIDTH (t): 6" NOMINAL
  OVERALL DIMENSION – 5 5/8"
  SINGLE WYTHE
- C-1 MASONRY PARTITION (1HR)
  U.L. DES. #U905
  CMU WIDTH (t): 8" NOMINAL
  OVERALL DIMENSION – 7 5/8"
  SINGLE WYTHE
- D-1 MASONRY PARTITION (1HR)
  UL. DES. #U905 STC-48
  CMU WIDTH (t): 10" NOMINAL
  OVERALL DIMENSION – 9 5/8"
  SINGLE WYTHE.
- D-2 MASONRY PARTITION (2HR)
  UL. DES. #U905 STC-48
  CMU WIDTH (t): 10" NOMINAL
  OVERALL DIMENSION – 9 5/8"
  SINGLE WYTHE.
- E-2 MASONRY PARTITION (2HR)
  UL. DES. #U905 STC-48
  CMU WIDTH (t): 12" NOMINAL
  OVERALL DIMENSION – 11 5/8"
  SINGLE WYTHE.

NON-RATED CMU PARTITIONS

- A-0 MASONRY PARTITION (NON-RATED)
  CMU WIDTH (t): 4" NOMINAL
  OVERALL DIMENSION – 3 5/8"
  SINGLE WYTHE.
- B-0 MASONRY PARTITION (NON-RATED)
  CMU WIDTH (t): 6" NOMINAL
  OVERALL DIMENSION – 5 5/8"
  SINGLE WYTHE
- C-0 MASONRY PARTITION (NON-RATED)
  CMU WIDTH (t): 8" NOMINAL
  OVERALL DIMENSION – 7 5/8"
  SINGLE WYTHE
- C-A MASONRY PARTITION (NON-RATED)
  CMU WIDTH (t): 8" NOMINAL
  OVERALL DIMENSION – 7 5/8"
  SINGLE WYTHE
  OVERALL HEIGHT – 7'-4"
- D-0 MASONRY PARTITION (NON-RATED)
  CMU WIDTH (t): 10" NOMINAL
  OVERALL DIMENSION – 9 5/8"
  SINGLE WYTHE
- E-0 MASONRY PARTITION (NON-RATED)
  CMU WIDTH (t): 12" NOMINAL
  OVERALL DIMENSION – 11 5/8"
  SINGLE WYTHE

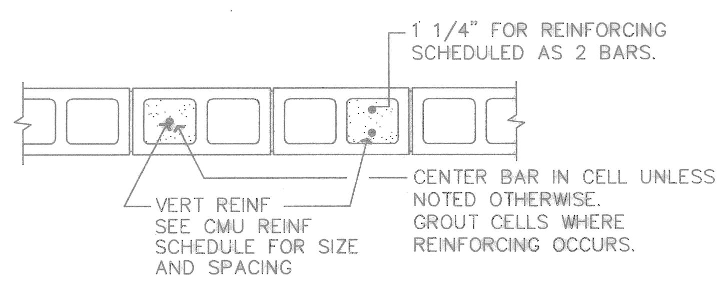

18 **PLAN DETAIL - REINFORCED CMU WALL**
A8-3 SCALE: 1 1/2" = 1'-0"

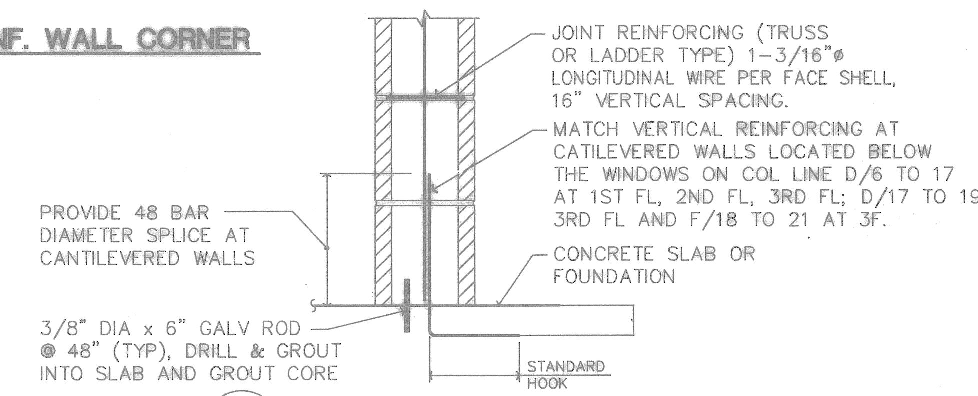

13 **CMU WALL SECTION**
A8-3 SCALE: 1 1/2" = 1'-0"

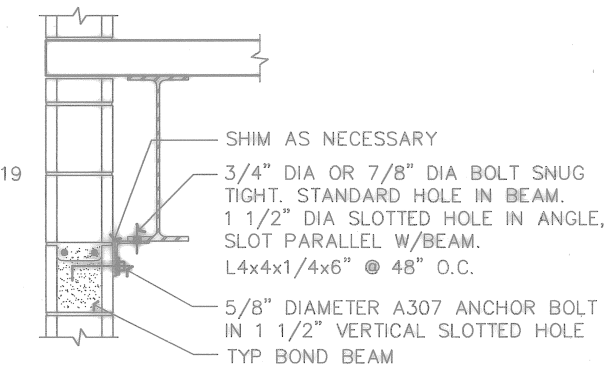

8 **CMU HEAD DETAIL - STEEL SPANDREL BEAM**
A8-3 SCALE: 1 1/2" = 1'-0"

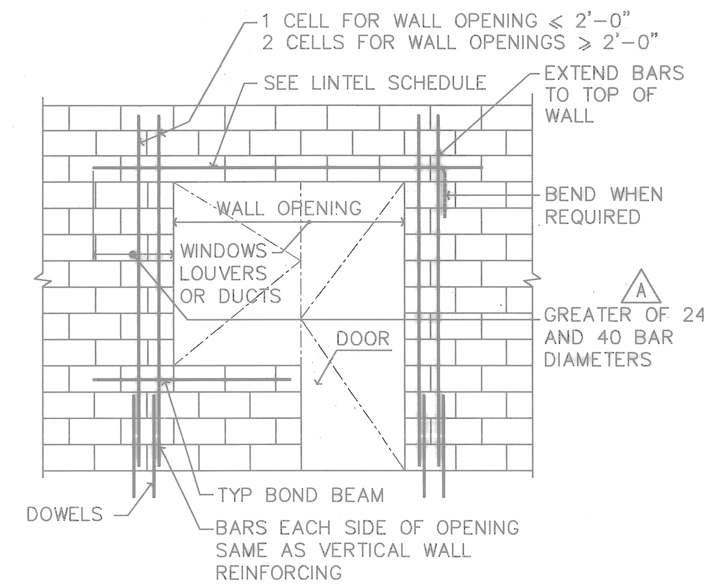

1 **CMU WALL DETAIL - REINFORCED OPENINGS**
A8-3 SCALE: 1 1/2" = 1'-0"

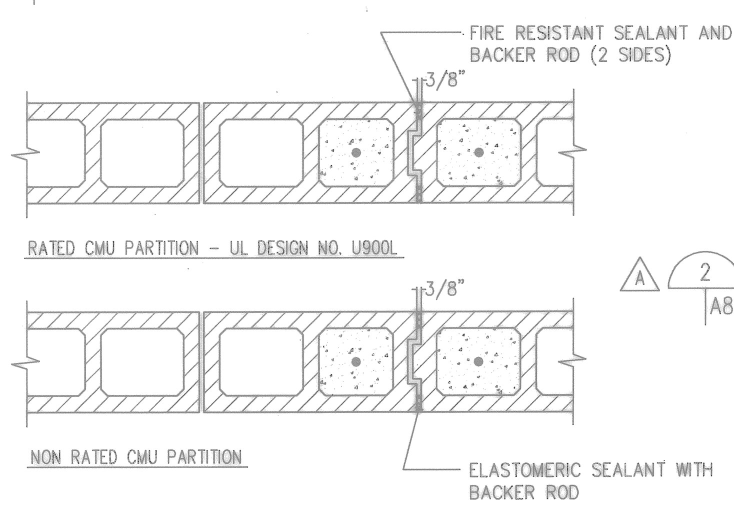

19 **CONTROL JOINT DETAILS - CMU PARTITIONS**
A8-3 SCALE: 1 1/2" = 1'-0"

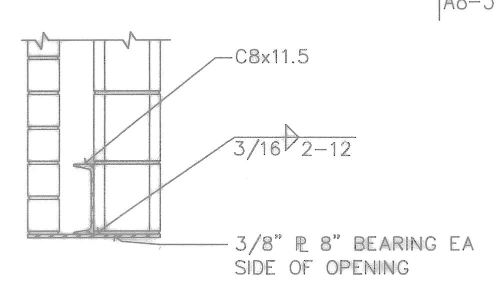

(A) 2 **BRICK/CMU DETAIL - STEEL LINTEL**
A8-3 SCALE: 1 1/2" = 1'-0"

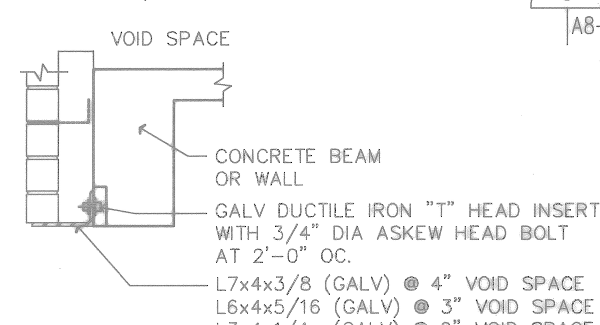

NOTE: PROVIDE SHELF ANGLE FOR WALL OPENING > 8'-0"

14 **BRICK SHELF ANGLE**
A8-3 SCALE: 1 1/2" = 1'-0"

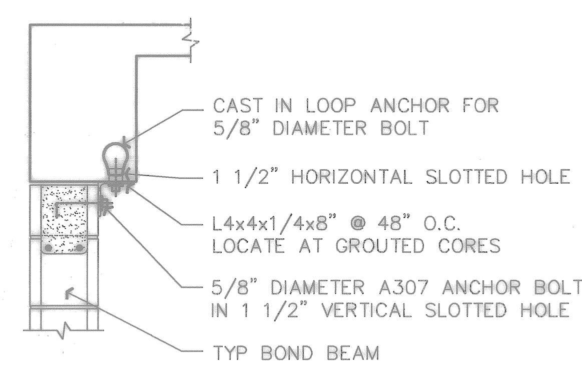

9 **CMU HEAD DETAIL - CONCRETE BEAM**
A8-3 SCALE: 1 1/2" = 1'-0"

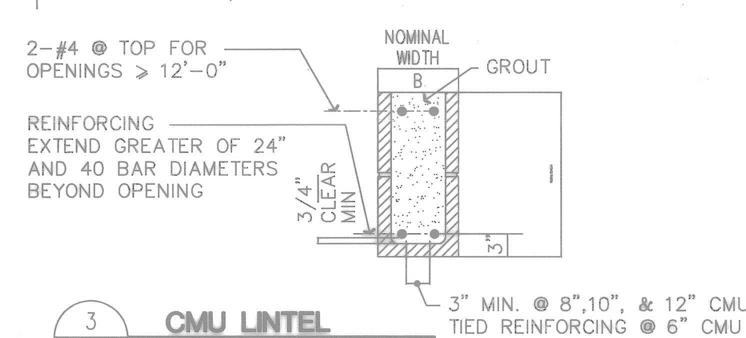

3 **CMU LINTEL**
A8-3 SCALE: 1 1/2" = 1'-0"

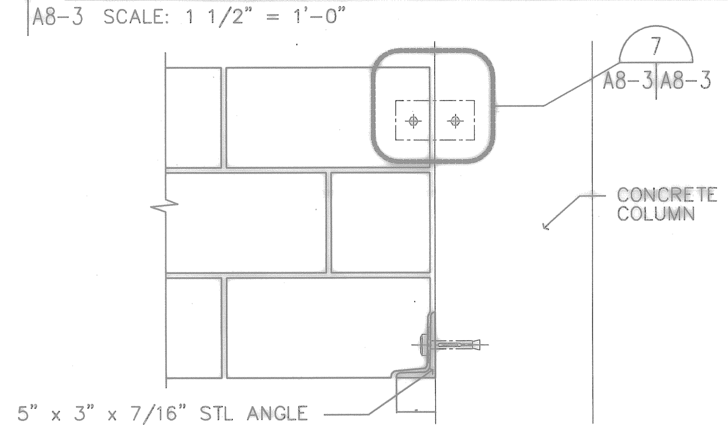

20 **LINTEL TO CONC COLUMN CONNECTION**
A8-3 SCALE: 1 1/2" = 1'-0"

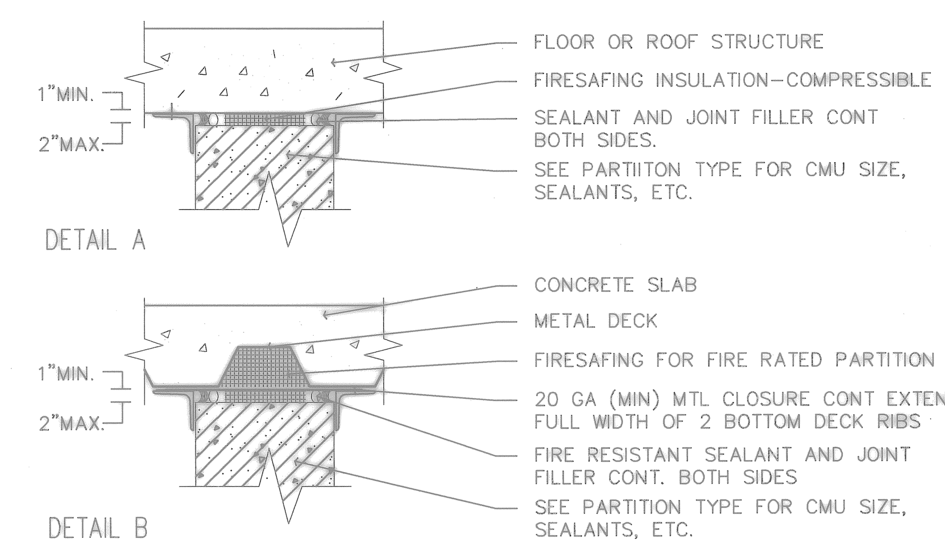

15 **HEAD DETAILS - RATED CMU PARTITIONS**
A8-3 SCALE: 1 1/2" = 1'-0"

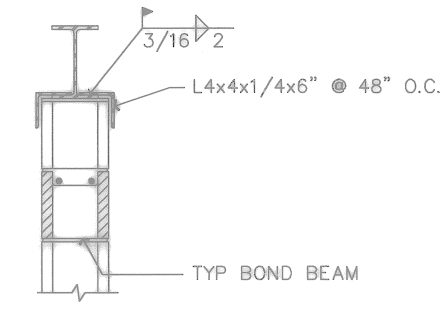

10 **CMU HEAD DETAIL - STEEL BEAM**
A8-3 SCALE: 1 1/2" = 1'-0"

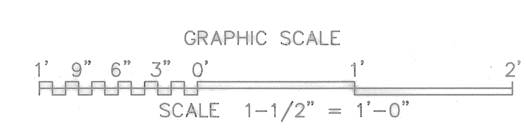

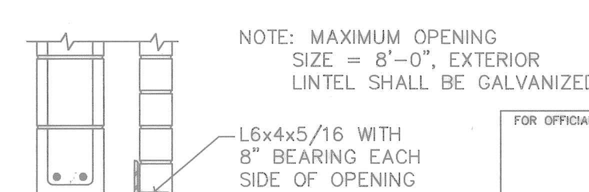

4 **BRICK LINTEL**
A8-3 SCALE: 1 1/2" = 1'-0"

FOR OFFICIAL USE ONLY

RECORD DRAWING
DATE 06/08/98

(A) DATE 07-31-97 ISSUE CORRECTED TO AS-BUILT BY DJS INITIAL

Knight Architects Engineers Planners, Inc.
549 West Randolph Street
Chicago, IL 60661
Established in 1945
A Lester B. Knight & Associates, Inc. Company
©Copyright 1994 Knight Architects Engineers Planners, Inc.

DSGN WARD DR MULLER CHK LORENZ
SUPV STROUSE CH ENGR
SUBMITTED BY DATE
FIRM MEMBER TITLE
EIC BR HD
FPE DIR
APPROVED DATE
OFFICER IN CHARGE
APPROVED DATE
EFD FOR COMMANDER, NAVFAC

ARCH. & ENGR. SEAL

DEPARTMENT OF THE NAVY NAVAL FACILITIES ENGINEERING COMMAND
SOUTHERN DIVISION
CHARLESTON, S.C.

NAVAL TRAINING CENTER GREAT LAKES, ILLINOIS

DAMAGE CONTROL SCHOOL
PARTITION TYPES AND CMU DETAILS

SIZE	CODE IDENT NO.	NAVFAC DRAWING NO.	DRAWING NO.
F	80091	5276505	A8-3
		CONSTR CONTR NO. N62467-93-C-1143	
SCALE 1 1/2" = 1'-0"		SPEC 06-93-1143	SHEET 80 OF

Date&time: 10/30/97 10:44:10 User: TWhite Filename: P:\PAPER\CHANGED\DJS\JAPSA803

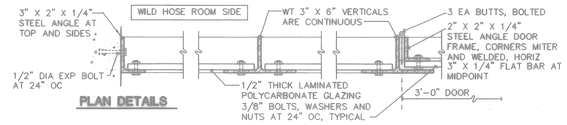

PLAN DETAILS

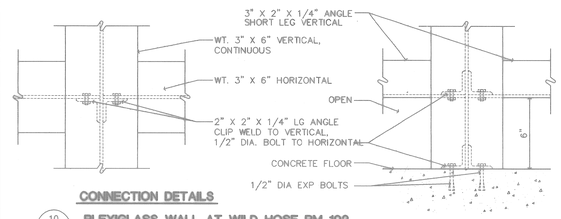

CONNECTION DETAILS

10 PLEXIGLASS WALL AT WILD HOSE RM 102
A2-1 A9-1 SCALE: 3"=1'-0"

7 NOT USED
A9-1

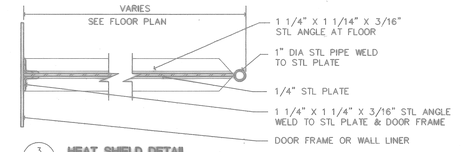

3 HEAT SHIELD DETAIL
A2-1 A9-1 SCALE: 3"=1'-0"

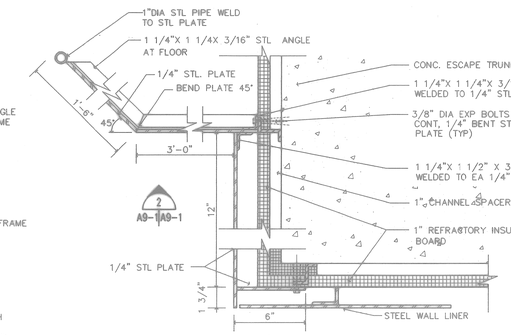

2 A9-1 A9-1

1 HEAT SHIELD DETAILS
A2-1 A9-1 SCALE: 3"=1'-0"

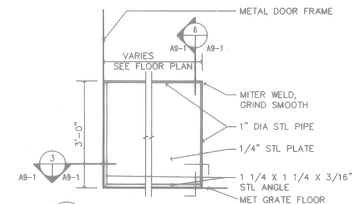

4 HEAT SHIELD DETAIL
A2-1 A9-1 SCALE: 3/4"=1'-0"

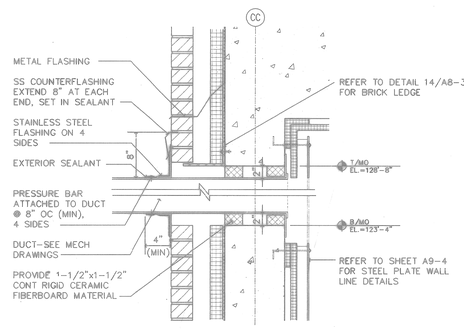

11 EXHAUST DUCT DETAIL AT PIT FIRE COMPARTMENT
A4-5 A9-1 SCALE: 1 1/2"=1'-0"

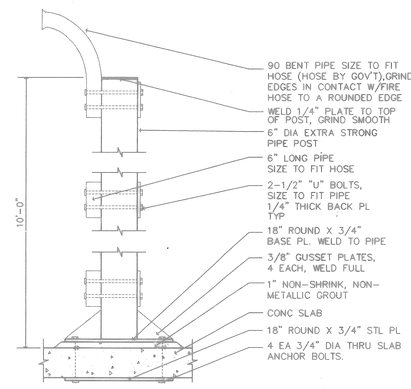

8 WILD HOSE SUPPORT POST DETAIL
A2-1 A9-1 SCALE: 1 1/2"=1'-0"

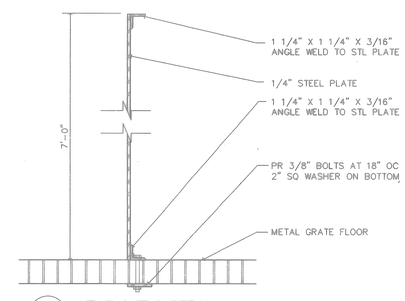

5 HEAT SHIELD DETAIL
A9-1 A9-1 SCALE: 3"=1'-0"

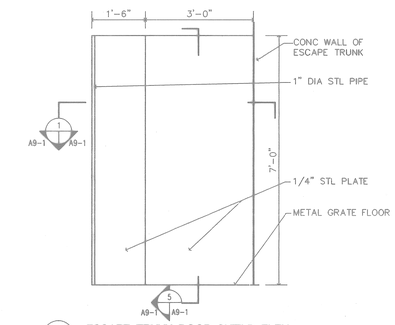

2 ESCAPE TRUNK DOOR SHIELD ELEV.
A9-1 A9-1 SCALE: 3/4"=1'-0"

9 NOT USED
A9-1

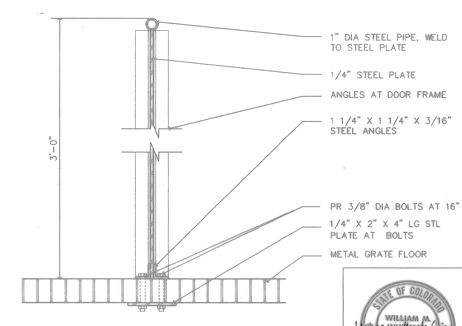

6 HEAT SHIELD DETAIL
A9-1 A9-1 SCALE: 3"=1'-0"

GRAPHIC SCALE
6" 3" 0 1'
SCALE 3" = 1'-0"

GRAPHIC SCALE
1' 9" 6" 3" 0' 1' 2'
SCALE 1-1/2" = 1'-0"

GRAPHIC SCALE
1' 6" 0 1' 2' 3' 4' 5'
SCALE 3/4" = 1'-0"

FOR OFFICIAL USE ONLY

RECORD DRAWING
DATE 06/08/98

1	07-21-97	T	AS-BUILT, NO CORRECTIONS	

STATE OF COLORADO
WILLIAM M. WHITMAN
B-1322
LICENSED ARCHITECT
ARCH. & ENGR. SEAL

Smith Architects Engineers Planners, Inc.
600 West Madison Street
Chicago, IL 60661
Ward Associates, Inc.
Lorenz & Macco Associates, Inc. Designers
Kimmelman, Wise Krieg Architects Designers Planners, Inc.

DSGN WARD JR MACCO CHK LORENZ
SUPV WHITMAN CH ENGR
SUBMITTED
DIV. SUPERVISOR
EIC
FPE
APPROVED DATE
DESIGN IN CHARGE
APPROVED DATE
CHIEF, FIRE FIGHTER DIV. NAVFAC

DEPARTMENT OF THE NAVY
NAVAL FACILITIES ENGINEERING COMMAND
SOUTHERN DIVISION
CHARLESTON, S.C.
NAVAL TRAINING CENTER GREAT LAKES, ILLINOIS

DAMAGE CONTROL SCHOOL
FIREFIGHTING TRAINER -
INTERIOR DETAILS

SIZE	CODE IDENT NO.	NAVFAC DRAWING NO.	DRAWING NO.
F	80091	5276506	A9-1
		CONTR CONTR NO. N62487-93-C-1143	
SCALE AS NOTED		SPEC 06-93-1143	SHEET 81 OF

6	7/16/98	JB	Item 6
5	7/16/98	JB	Item 5
4	7/16/98	JB	Item 4
3	7/16/98	JB	Item 3
2	7/16/98	JB	Item 2
1	7/16/98	JB	Item 1

Datetime: 08/16/94 08:20:08 MAW - PLOTPUMP Filename: P:\PAPER\JAPSA901

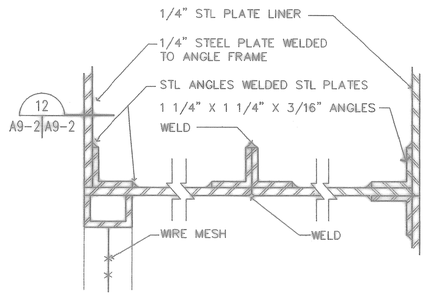

14 DETAIL
A9-2 A9-2 SCALE: 3"=1'-0"

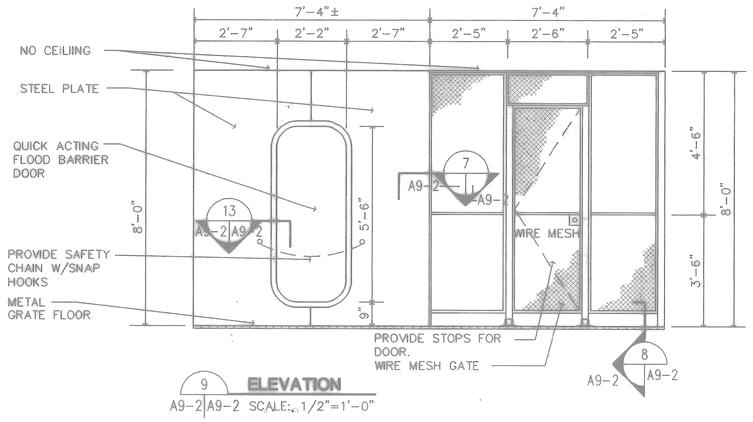

9 ELEVATION
A9-2 A9-2 SCALE: 1/2"=1'-0"

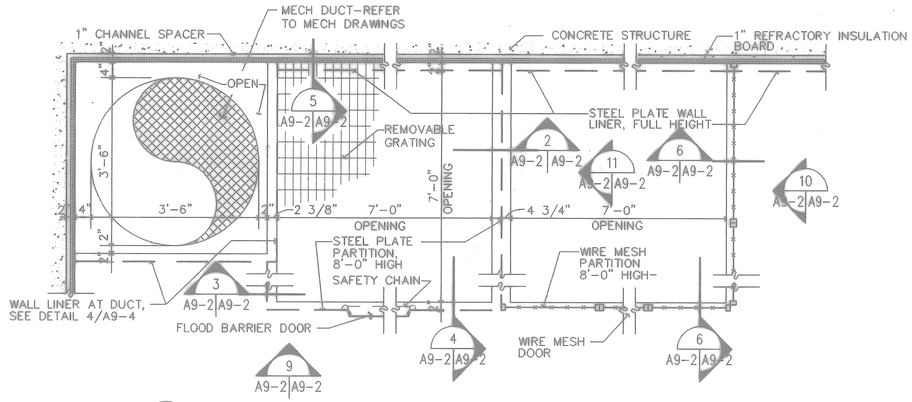

1 ENLARGED PLAN OF FIREPLACES
A2-2 A9-2 SCALE: 3/4"=1'-0"

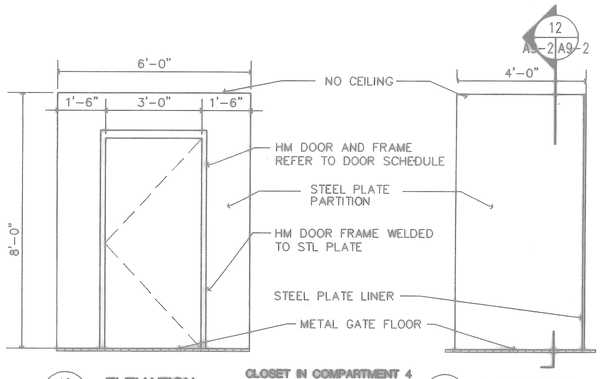

16 ELEVATION
A2-1 A9-2 SCALE: 1/2"=1'-0"

CLOSET IN COMPARTMENT 4

15 ELEVATION
A9-2 A9-2 SCALE: 1/2"=1'-0"

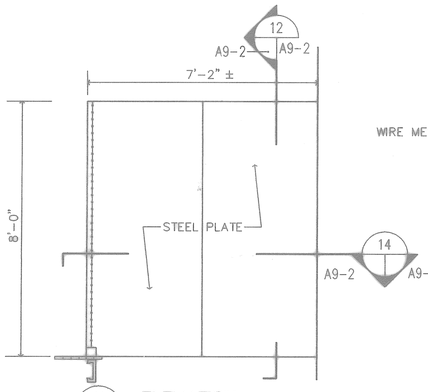

11 ELEVATION
A9-2 A9-2 SCALE: 1/2"=1'-0"

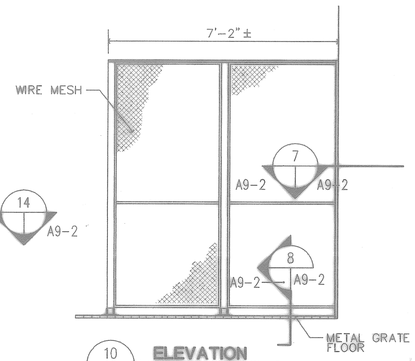

10 ELEVATION
A9-2 A9-2 SCALE: 1/2"=1'-0"

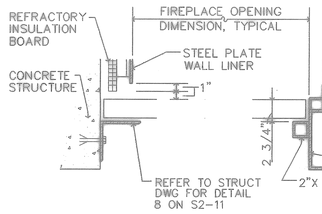

5 DETAIL
A9-2 A9-2 SCALE: 1 1/2"=1'-0"

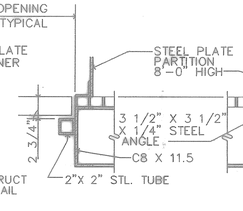

4 DETAIL
A9-2 A9-2 SCALE: 1 1/2"=1'-0"

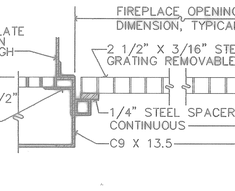

3 DETAIL
A9-2 A9-2 SCALE: 1 1/2"=1'-0"

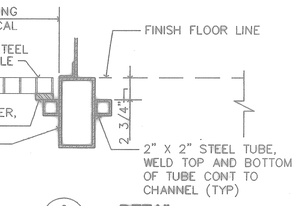

2 DETAIL
A9-2 A9-2 SCALE: 1 1/2"=1'-0"

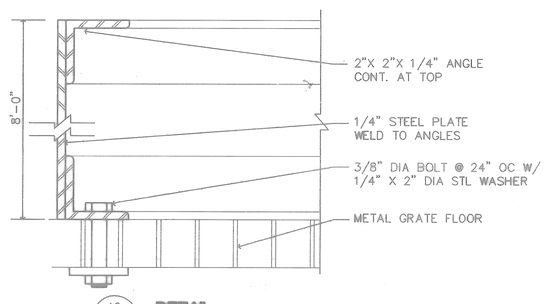

12 DETAIL
A9-2 A9-2 SCALE: 1 1/2"=1'-0"

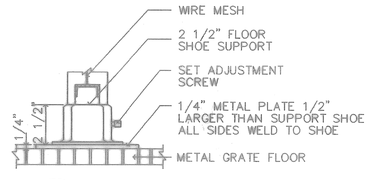

8 DETAIL
A9-2 A9-2 SCALE: 3"=1'-0"

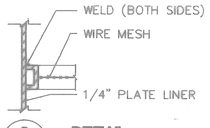

7 DETAIL
A9-2 A9-2 SCALE: 3"=1'-0"

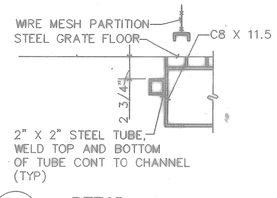

6 DETAIL
A9-2 A9-2 SCALE: 1 1/2"=1'-0"

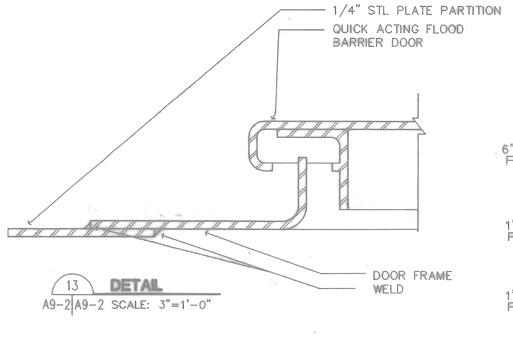

13 DETAIL
A9-2 A9-2 SCALE: 3"=1'-0"

GRAPHIC SCALE
6" 3" 0 1'
SCALE 3" = 1'-0"

GRAPHIC SCALE
1' 9" 6" 3" 0' 1' 2'
SCALE 1-1/2" = 1'-0"

GRAPHIC SCALE
1' 6" 0 1' 2' 3' 4' 5'
SCALE 3/4" = 1'-0"

STATE OF COLORADO
WILLIAM M. WHITMAN
B-1222
LICENSED ARCHITECT
ARCH. & ENGR. SEAL

FOR OFFICIAL USE ONLY

RECORD DRAWING
DATE 06/08/98

DATE 07-31-97 REMARKS AS-BUILT, NO CORRECTIONS BY STAMP

Knight Architects Engineers Planners, Inc.
200 West Monroe Street
Chicago, IL 60606
Sargent & Lundy
A Limited Liability Company
A Subsidiary of Sargent & Lundy, Inc. Company
A-Copyright 1997 Knight Architects Engineers Planners, Inc.

DEPARTMENT OF THE NAVY
NAVAL FACILITIES ENGINEERING COMMAND
SOUTHERN DIVISION
CHARLESTON, S.C.

DSGN WARD DR MACCO CHK LORENZ
SUPV WHITMAN CH ENGR
SUBMITTED BY DATE 5/4/94
DRN MOWER WAE
EIC BR HD
FPE DIR

NAVAL TRAINING CENTER GREAT LAKES, ILLINOIS

DAMAGE CONTROL SCHOOL FIREFIGHTING TRAINER - INTERIOR ELEVATIONS AND DETAILS

APPROVED DATE
OFFICER IN CHARGE
APPROVED DATE 9/12/94
CFD FOR COMMANDER, NAVFAC

SIZE	CODE IDENT NO.	NAVFAC DRAWING NO.	DRAWING NO.
F	80091	5276507	A9-2
SCALE AS NOTED		CONSTR CONTR NO. N62467-93-C-1143	
		SPEC 06-93-1143	SHEET 82 OF

Filename: P:\PAPER\JAPSA902
MAW - PLOTPUMP
Date&time: 08/16/94 08:40:26

P: TTL-BLCK PS lineW=0.0		
P: TTL-HNGT PS lineW=0.0		
P: JAPSA902 PS lineW=0.0		
P: JAGBORC NS lineW=0.0		

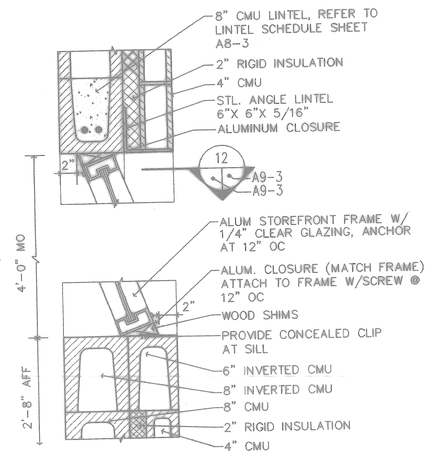

11 HEAD/SILL DETAIL
A5-1|A9-3 SCALE: 1 1/2"=1'-0"

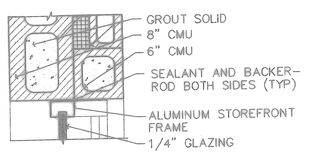

12 JAMB DETAIL
A2-3|A9-3 SCALE: 1 1/2"=1'-0"

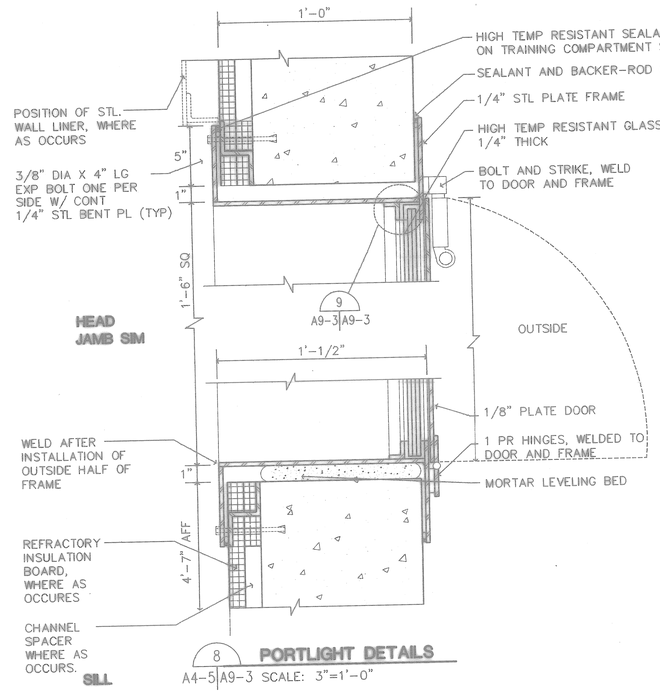

8 PORTLIGHT DETAILS
A4-5|A9-3 SCALE: 3"=1'-0"

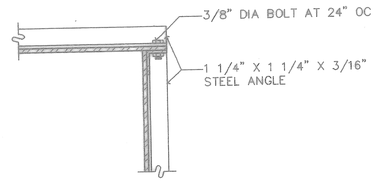

4 PLAN AT CORNER
A9-3|A9-3 SCALE: 3"=1'-0"

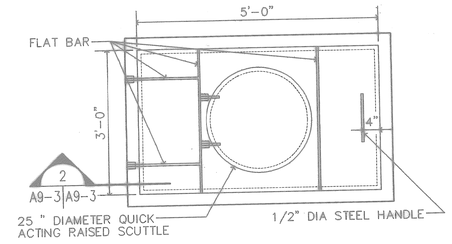

1 PLAN OF HATCH W/ SCUTTLE
A2-2|A9-3 SCALE: 3/4"=1'-0"

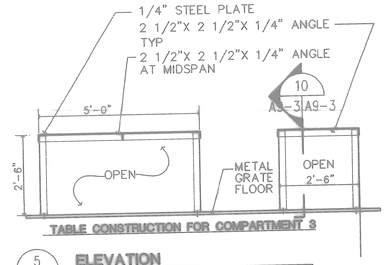

5 ELEVATION
A2-1|A9-3 SCALE: 1/2"=1'-0"

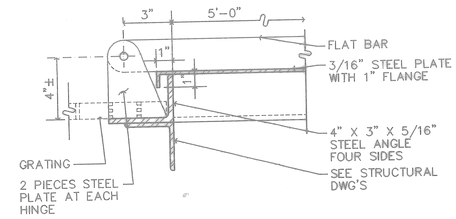

2 HATCH DETAIL
A9-3|A9-3 SCALE: 3"=1'-0"

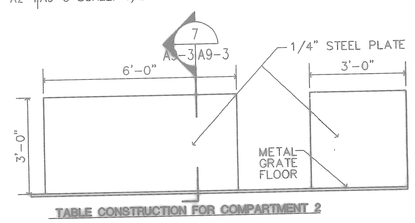

6 ELEVATION
A2-1|A9-3 SCALE: 1/2"=1'-0"

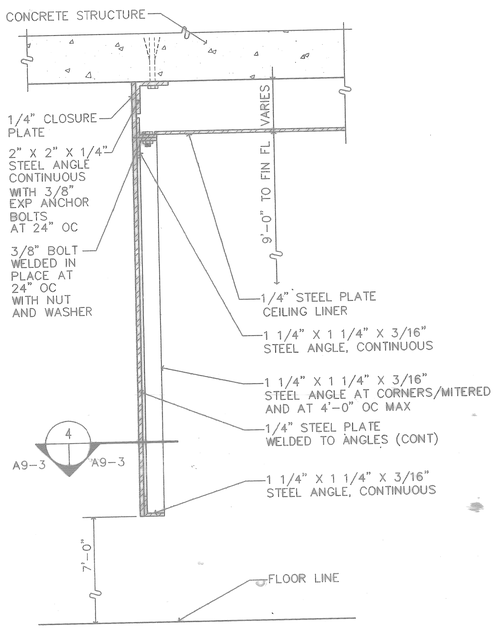

3 TYPICAL LADDER SHIELD DETAIL
A4-5|A9-3 SCALE: 3"=1'-0"

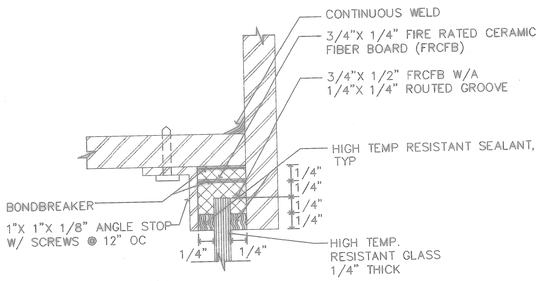

9 DETAIL
A9-3|A9-3 SCALE: 1/2 SIZE

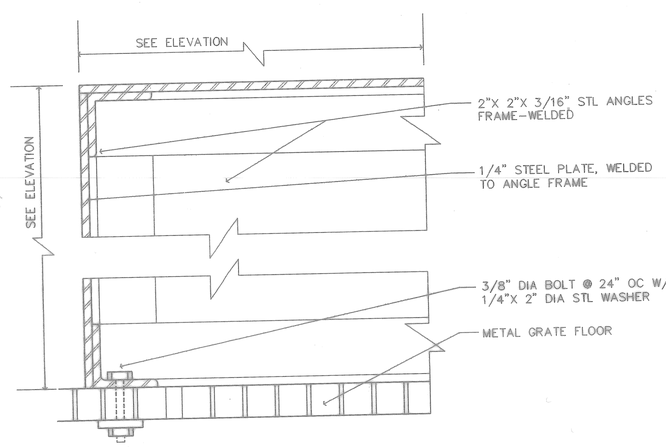

7 DETAIL
A9-3|A9-3 SCALE: 3"=1'-0"

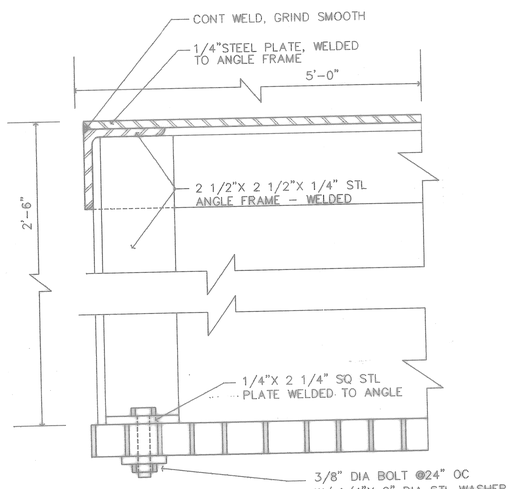

10 DETAIL
A9-3|A9-3 SCALE: 3"=1'-0"

GRAPHIC SCALE
6" 3" 0 1'
SCALE 3" = 1'-0"

GRAPHIC SCALE
1' 9" 6" 3" 0' 1' 2'
SCALE 1-1/2" = 1'-0"

GRAPHIC SCALE
1' 6" 0 1' 2' 3' 4' 5'
SCALE 3/4" = 1'-0"

GRAPHIC SCALE
1' 0 1' 2' 3' 4' 5' 6' 7' 8'
SCALE 1/2" = 1'-0"

STATE OF COLORADO
WILLIAM M. WHITMAN
B-1222
LICENSED ARCHITECT
ARCH. & ENGR. SEAL

FOR OFFICIAL USE ONLY

RECORD DRAWING
DATE 06/08/98

-- DATE 07-31-97	SUBM AS-BUILT, NO CORRECTIONS	BY	STMA
Knight Architects Engineers Planners, Inc. 549 West Randolph Street Chicago, IL 60661 Established in 1949 A Lester B. Knight & Associates, Inc. Company © Copyright 1997 Knight Architects Engineers Planners, Inc.	DEPARTMENT OF THE NAVY NAVAL FACILITIES ENGINEERING COMMAND SOUTHERN DIVISION CHARLESTON, S.C.		
DSGN WARD DR MACCO CHK LORENZ	NAVAL TRAINING CENTER GREAT LAKES, ILLINOIS		
SUPV WHITMAN CH ENGR	DAMAGE CONTROL SCHOOL FIREFIGHTING TRAINER - INTERIOR DETAILS		
SUBMITTED BY / DATE			
EIC / BR HEAD / FPE / DR			
APPROVED / DATE			
OFFICIAL CHARGE APPROVED / DATE			
CO FOR COMMANDER NAVFAC	SIZE F	CODE IDENT NO. 80091	NAVFAC DRAWING NO. 5276508
	DRAWING NO. A9-3	CONSTR CONTR NO. N62467-93-C-1143	
	SCALE AS NOTED	SPEC 06-93-1143	SHEET 83 OF

Date&time: 08/16/94 08:31:18 MAW - PLOTPUMP Filename: P:\PAPER\JAPSA903

P: TTL-BLOK	PS	Insp=0.0	
P: A-TTL-BLK	PS	Insp=0.0	
P: JAPSA903	PS	Insp=0.0	
P: JAPSA903	MS	Insp=0.0	