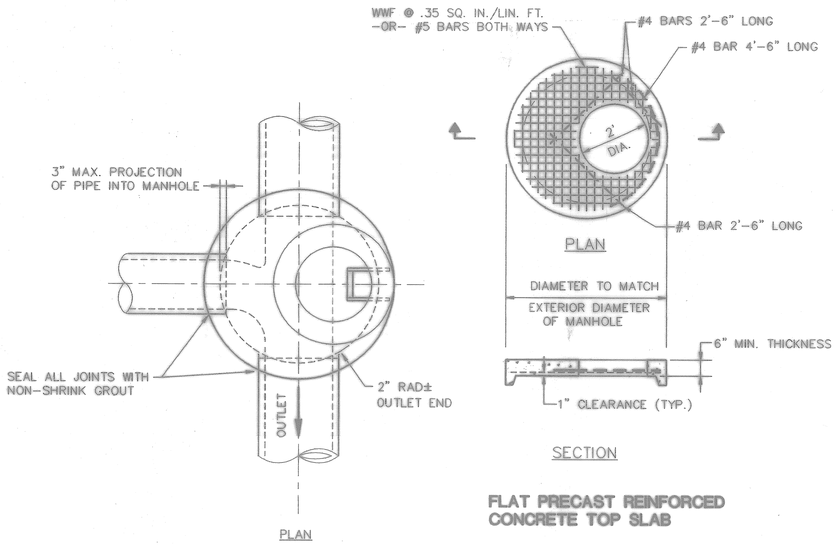

FLAT PRECAST REINFORCED CONCRETE TOP SLAB

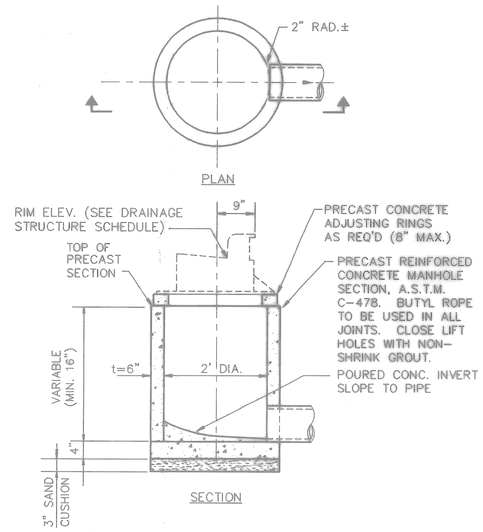

1 STORM WATER INLET TYPE A
C5-1 C8-2 SCALE: NONE

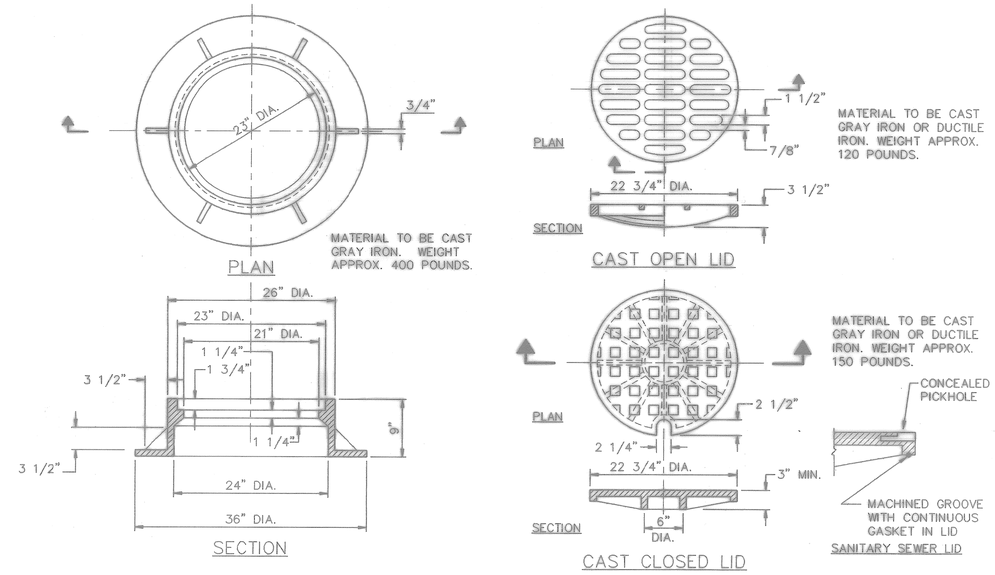

2 TYPE 1 FRAME AND LIDS
C5-1 C8-2 C6-1 SCALE: NONE

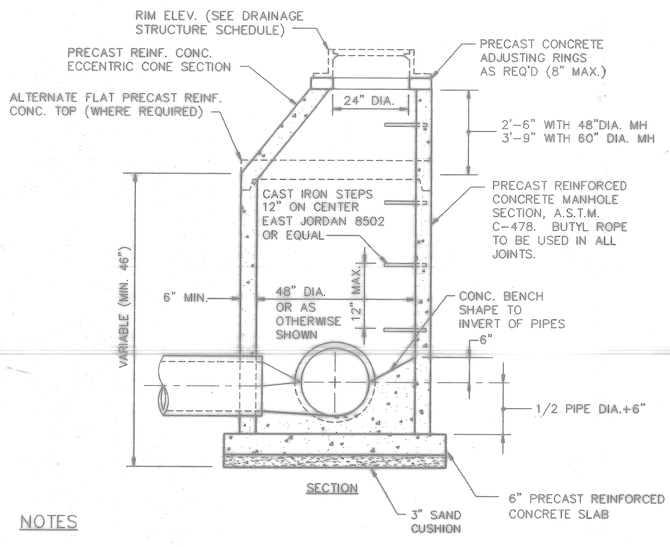

NOTES

1. LOCATIONS FOR THE STRUCTURES ARE GIVEN TO THE CENTER OF THE STRUCTURE, UNLESS OTHERWISE SHOWN ON THE PLANS.
2. ALL COMPONENTS SHALL BE SET IN CONTINUOUS BUTYL ROPE BEDS.
3. ALL LIFT HOLES SHALL BE COMPLETELY FILLED WITH NON-SHRINK GROUT AND TROWELLED SMOOTH.
4. STEPS SHALL BE EMBEDDED INTO WALL A MINIMUM OF 3 INCHES AND SHALL NOT PROTRUDE TO THE EXTERIOR OF THE MANHOLE.
5. VERIFY ALL MANHOLE HEIGHTS PER SHEET C5-1 AND C6-1 OR AS INDICATED AT OTHER LOCATIONS.

3 MANHOLE TYPE A
C5-1 C8-2 C6-1 SCALE: NONE

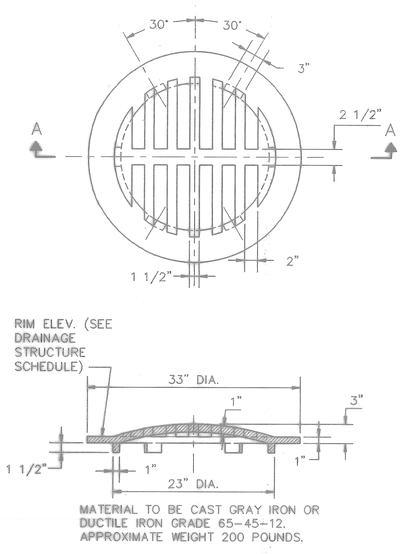

4 TYPE 8 GRATE
C5-1 C8-2 SCALE: NONE

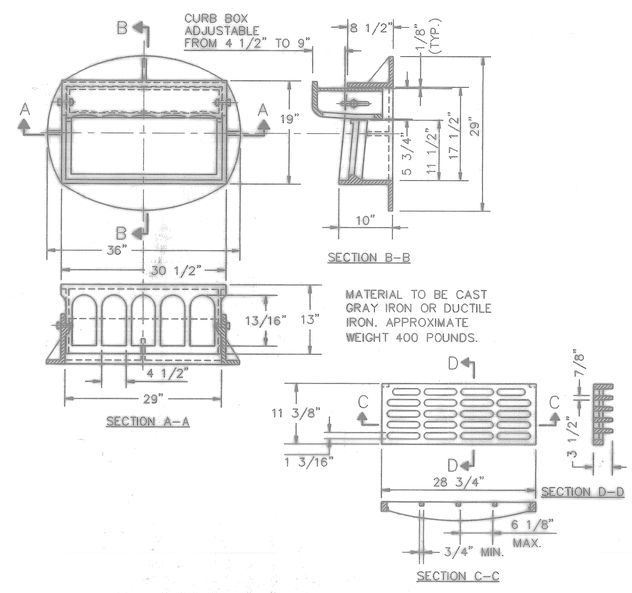

5 TYPE 11 FRAME AND GRATE
C5-1 C8-2 SCALE: NONE

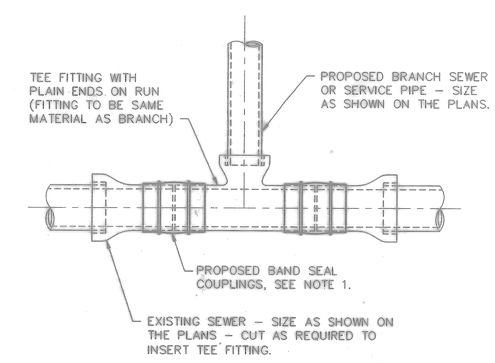

1. COUPLINGS: PROVIDE RUBBER OR ELASTOMERIC SLEEVE AND STAINLESS STEEL BAND ASSEMBLY FABRICATED TO MATCH OUTSIDE DIAMETERS OF PIPES TO BE JOINED.

   A. SLEEVES: ASTM C 425, RUBBER FOR VITRIFIED CLAY PIPE; ASTM C 443, RUBBER FOR CONCRETE PIPE; ASTM C 564, RUBBER FOR CAST IRON SOIL PIPE; AND ASTM F 477, ELASTOMERIC SEAL FOR PLASTIC PIPE. SLEEVES FOR DISSIMILAR OR OTHER PIPE MATERIALS SHALL BE COMPATIBLE WITH PIPE MATERIALS BEING JOINED.

   B. BANDS: STAINLESS STEEL, ONE AT EACH PIPE INSERT.

6 BRANCH CONNECTION TO EXISTING SEWER
C5-1 C8-2 SCALE: NONE

FOR OFFICIAL USE ONLY

RECORD DRAWING
DATE 06/08/98

DATE 07-31-97 STAT AS-BUILT; NO CORRECTIONS BY ____ STAT. ____

Knight Architects Engineers Planners, Inc.
549 West Randolph Street
Chicago, IL 60661
Established in 1946
A Leader in Knight & Associates, Inc. Company
© Copyright 1994 Knight Architects Engineers Planners, Inc.

DSGN BARNES/ERICKSON/KLODZE
SUPV VICK CH. ENGR.
SUBMITTED BY DATE 8-21-97
PRM MEMBER BFA
EIC ____ DR NO. ____
FPE ____ DIR. ____

DEPARTMENT OF THE NAVY — NAVAL FACILITIES ENGINEERING COMMAND
SOUTHERN DIVISION
CHARLESTON, S.C.
NAVAL TRAINING CENTER — GREAT LAKES, ILLINOIS

DAMAGE CONTROL SCHOOL
SITE DETAILS

DONALD G. BARNES 062-047993 REGISTERED PROFESSIONAL ENGINEER OF ILLINOIS
ARCH. & ENGR. SEAL

APPROVED DATE
OFFICER IN CHARGE
APPROVED DATE 9/15/98
CTO FOR COMMANDER, NAVFAC

SIZE	CODE IDENT NO.	NAVFAC DRAWING NO.	DRAWING NO.
F	80091	5276438	C8-2
		CONSTR CONTR NO. N62467-93-C-1143	
SCALE NONE		SPEC 08-93-1143	SHEET 13 OF

Date&time: 08/17/94 07:48:00 User: DBE Filename: P:\PAPER\JCPS0802

6	TTL-CONTR	PS	Item=0.0
5	TTL-2000/2002	PS	Item=0.0
4	TTL-TBLCK	PS	Item=0.0
3	ADVM0005	PS	Item=0.0

13

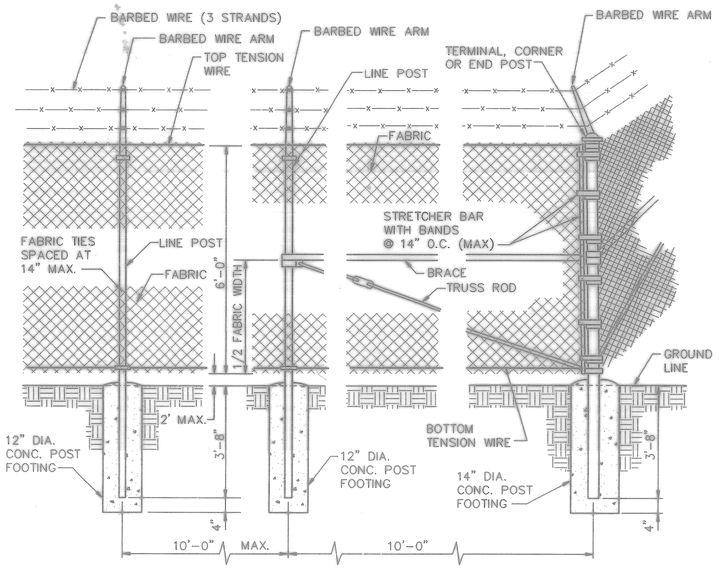

1 CHAIN LINK FENCE
U1-1 C8-3 SCALE: NONE

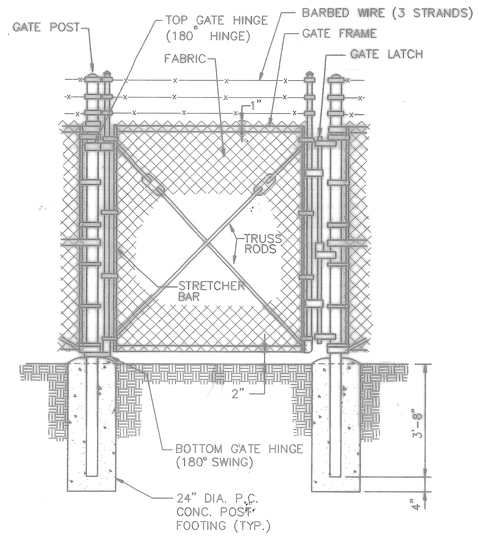

2 CHAIN LINK FENCE GATE
U1-1 C8-3 SCALE: NONE

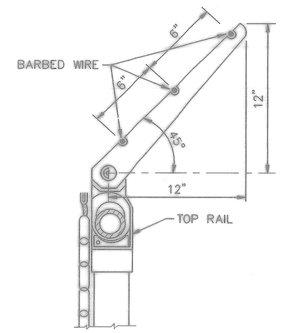

3 BARBED WIRE ARM
C8-3 C8-3 SCALE: NONE

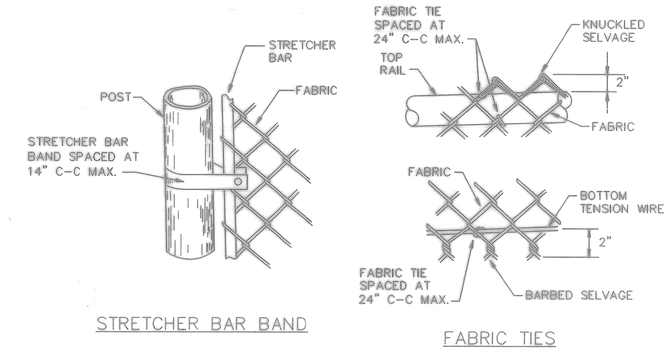

STRETCHER BAR BAND

FABRIC TIES

4 CHAIN LINK FENCE CONNECTIONS
C8-3 C8-3 SCALE: NONE

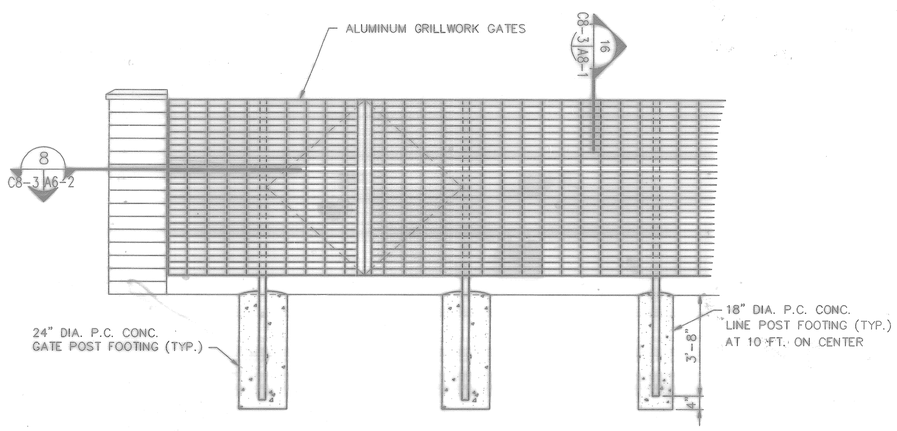

ELEVATION

5 ALUMINUM GRILLEWORK FENCE
C4-1 C8-3 SCALE: NONE

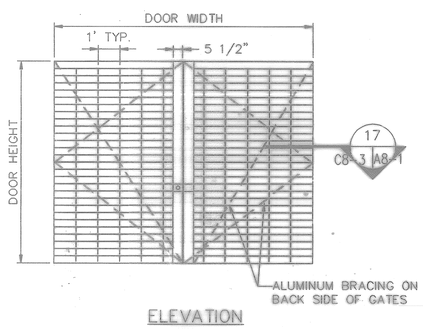

ELEVATION

6 ALUMINUM GRILLEWORK GATES
C4-1 C8-3 SCALE: NONE

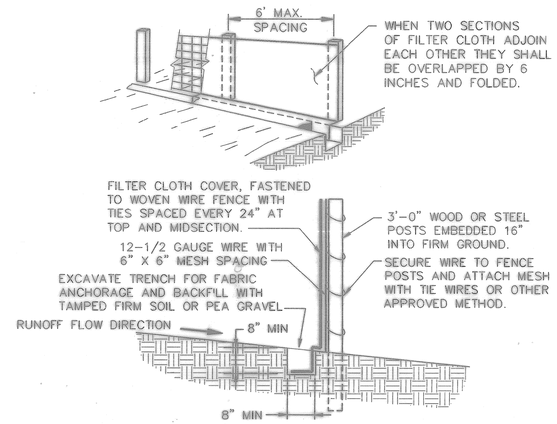

NOTES FOR SILT FENCE

1. MAINTENANCE SHALL BE PERFORMED AS NEEDED AND MATERIAL SHALL BE REMOVED WHEN BULGES DEVELOP IN THE SILT FENCE.
3. FILTER CLOTH SHALL BE FILTER X, MIRAFI 100X, STABILINKA T140N, OR EQUAL.
4. PREFABRICATED UNIT SHALL BE GEOFAB, ENVIROFENCE, OR EQUAL.

7 TEMPORARY SILT FENCE
U2-1 C8-3 SCALE: NONE

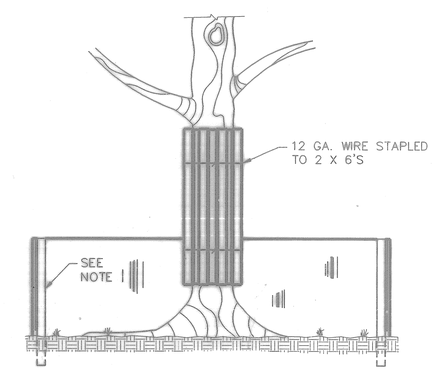

NOTE

ESTABLISH CORDON LINE LOCATED AT THE DRIP LINE OF, AND COMPLETELY ENCIRCLING, THE TREE. FOR CORDON LINE, SEE SILT FENCE DETAIL.

8 TREE PROTECTION
C3-1 C8-3 SCALE: NONE

FOR OFFICIAL USE ONLY

RECORD DRAWING
DATE 06/08/98

07-31-97 AS-BUILT, NO CORRECTIONS

Knight Architects Engineers Planners, Inc.
549 West Randolph Street
Chicago, IL 60661
Established in 1919
A Lester B. Knight & Associates, Inc. Company
©Copyright 1994 Knight Architects Engineers Planners, Inc.

DSGN BARNES, ERICKSON, KLODZEN
SUPV VICK CH. ENGR
SUBMITTED BY DATE
SPN MANAGER
EIC ER HEAD
FPE DIR

DEPARTMENT OF THE NAVY — NAVAL FACILITIES ENGINEERING COMMAND
SOUTHERN DIVISION
CHARLESTON, S.C.
NAVAL TRAINING CENTER — GREAT LAKES, ILLINOIS

DAMAGE CONTROL SCHOOL
SITE DETAILS

APPROVED DATE
OFFICER IN CHARGE
APPROVED DATE
EFD FOR COMMANDER, NAVFAC 9/13/99

ARCH. & ENGR. SEAL

SIZE	CODE IDENT NO.	NAVFAC DRAWING NO.	DRAWING NO.
F	80091	5276439	C8-3
SCALE NONE		CONSTR CONTR NO. N62467-93-C-1143	
		SPEC 08-93-1143	SHEET 14 OF

Date&time: 08/31/94 10:17:28 User: DBE Filename: P:\PAPER\JCPS0803

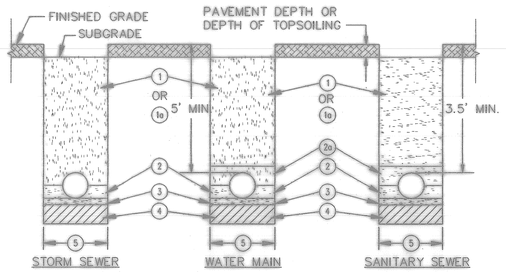

(1) MECHANICALLY COMPACTED CRUSHED LIMESTONE, I.D.O.T. GRADATION CA-6, IN 6 INCH LIFTS UNDER OR WITHIN 2 FEET OF ANY PAVEMENT, CURB, GUTTER OR SIDEWALK AS INDICATED.

(1a) COMPACTED SUITABLE EXCAVATED MATERIAL IN NON-PAVED AREAS.

(2) CA-6 CRUSHED LIMESTONE TAMPED INTO PLACE TO SPRING LINE OF PIPE.

(2a) SANITARY SEWER (FLEXIBLE)
CA-6 CRUSHED LIMESTONE TAMPED IN PLACE TO TWELVE INCHES ABOVE TOP OF PIPE. (FOUR INCHES ABOVE TOP OF PIPE FOR RIGID PIPES).
WATER MAIN
CA-6 CRUSHED LIMESTONE TAMPED INTO PLACE TO FOUR INCHES ABOVE TOP OF PIPE.

(3) FOUR INCH BEDDING - MECHANICALY COMPACTED CA-6 CRUSHED LIMESTONE.

(4) UNSUITABLE MATERIAL TO BE REMOVED AND REPLACED WITH OPEN GRADED CA-7 CRUSHED LIMESTONE OR AS OTHERWISE DIRECTED.

(5) MAX. TRENCH WIDTH AT TOP OF PIPE
4" THRU 12"=2'-6"; 16"=3'-0"; 18"=3'-2"

1 TYPICAL PIPE TRENCH CROSS SECTIONS
C6-1 C8-4 SCALE: NONE

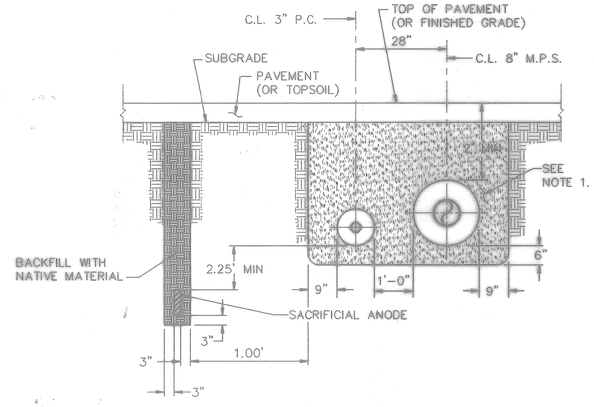

NOTES

1. BEDDING AND BACKFILL TO BE SAND, MECHANICALLY COMPACTED IN 6" LIFTS, GRADATION FA-6.

2 STEAM AND CONDENSATE TRENCH DETAIL
C6-1 C8-4 SCALE: NONE

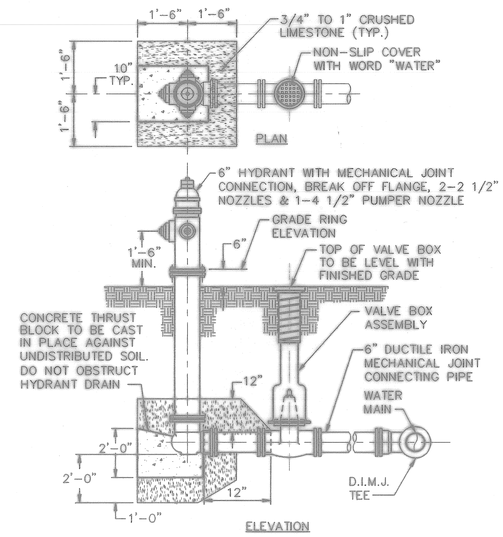

3 FIRE HYDRANT INSTALLATION
C6-1 C8-4 SCALE: NONE

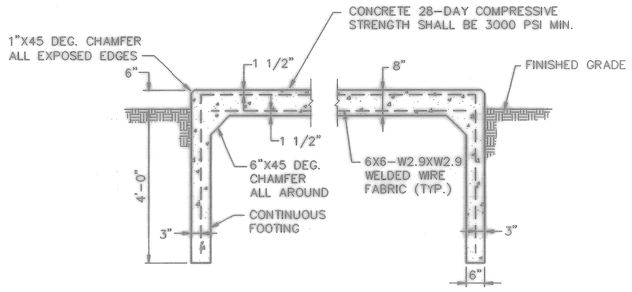

4 MECHANICAL EQUIPMENT AND CO 2 STORAGE UNIT FOUNDATIONS
C4-1 C8-4 SCALE: NONE

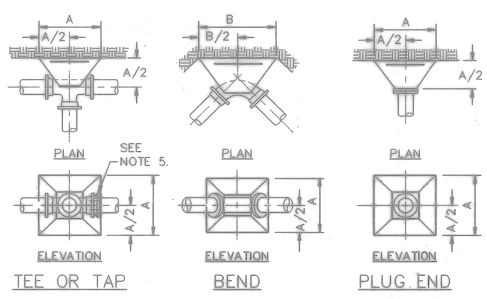

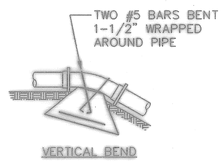

TABLE OF "A" DIMENSIONS (IN FEET)						
TEST PRESSURE (P.S.I.)	PIPE SIZE (NOMINAL DIAMETER IN INCHES)					
	4	6	8	10	12	16
100	1'-2"	1'-6"	2'-0"	2'-5"	3'-0"	4'-0"
115	1'-3"	1'-7"	2'-1"	2'-7"	3'-1"	4'-4"
130	1'-3"	1'-8"	2'-3"	2'-9"	3'-4"	4'-7"
150	1'-4"	1'-11"	2'-6"	3'-2"	3'-9"	4'-11"

TABLE OF "B" DIMENSIONS (IN FEET)							
TEST PRESSURE (P.S.I.)	BEND (DEGREES)	PIPE SIZE (NOMINAL DIAMETER IN INCHES)					
		4	6	8	10	12	16
100	90	1'-4"	1'-9"	2'-4"	3'-0"	3'-5"	5'-10"
	45	1'-0"	1'-4"	1'-9"	2'-2"	2'-7"	4'-4"
	22-1/2	0'-9"	1'-0"	1'-3"	1'-6"	1'-10"	3'-1"
	11-1/4	0'-6"	0-8"	1'-0"	1'-1"	1'-4"	2'-2"
115	90	1'-5"	1'-11"	2-6"	3'-1"	3'-8"	6'-3"
	45	1'-1"	1'-5"	1'-10"	2'-4"	2'-9"	4'-8"
	22-1/2	0'-9"	1'-0"	1'-4"	1'-8"	2'-0"	3'-4"
	11-1/4	0'-7"	0'-9"	1'-0"	1'-2"	1'-5"	2'-4"
130	90	1'-6"	2'-0"	2'-8"	3'-4"	3'-11"	6'-8"
	45	1'-2"	1'-6"	2'-0"	2'-5"	2'-11"	4'-11"
	22-1/2	0'-10"	1'-1"	1'-5"	1'-9"	2'-1"	3'-6"
	11-1/4	0'-8"	0'-9"	1'-0"	1'-3"	1'-6"	2'-6"
150	90	2'-0"	2'-10"	3'-9"	4'-7"	5'-5"	7'-2"
	45	1'-6"	2'-1"	2'-9"	3'-4"	4'-0"	5'-3"
	22-1/2	1'-3"	1'-6"	2'-0"	2'-5"	2'-10"	3'-9"
	11-1/4	0-9"	1'-1"	1'-5"	1'-9"	2'-0"	2'-8"

NOTES

1. THRUST BLOCKS SHALL BE CONSTRUCTED OF CLASS "X" P.C. CONCRETE.
2. REINFORCING STEEL SHALL BE BASED ON TEST PRESSURES:
   100 PSI = #4 @ 12" EACH WAY
   115 PSI = #4 @ 12" EACH WAY
   130 PSI = #5 @ 12" EACH WAY
   150 PSI = #5 @ 12" EACH WAY
3. THRUST BLOCK SIZE FOR TEE DETERMINED BY SMALLEST DIAMETER OF TEE AND TEST PRESSURE OF PIPE.
4. ALL THRUST BLOCK SIZES SHOWN ARE BASED ON A MINIMUM SOIL BEARING PRESSURE OF 1500 PSI (STANDARD PROCTOR).
5. MECHANICALLY RESTRAINED JOINTS SHALL BE USED WHEREVER THERE IS A SHORTAGE OF SPACE DUE TO OTHER UTILITIES OR STRUCTURES, AND WHERE BEARING SOILS HAVE BEEN DISTURBED OR DO NOT MEET THE MINIMUM SOIL BEARING REQUIREMENT.

5 THRUST BLOCK DETAILS
C6-1 C8-4 SCALE: NONE

FOR OFFICIAL USE ONLY

RECORD DRAWING
DATE 06/05/98

DATE 07-31-97 AS-BUILT, NO CORRECTIONS BY: DETAIL N.D.D.

Knight Architects Engineers Planners, Inc.
549 West Randolph Street
Chicago, IL 60661
Distributed in Joint Venture with Barnes & Associates, Inc. Consortium
© Copyright 1994 Knight Architects Engineers Planners, Inc.

DEPARTMENT OF THE NAVY — NAVAL FACILITIES ENGINEERING COMMAND
SOUTHERN DIVISION
CHARLESTON, S.C.

NAVAL TRAINING CENTER — GREAT LAKES, ILLINOIS

DAMAGE CONTROL SCHOOL
SITE DETAILS

DSGN BARNES ERICKSON KLODZEN
SUPV VICK CH ENGR
SUBMITTED BY DATE 8-31-94
PROJ MGR/ARCH
ELEC ST
PFE DR

DONALD G. BARNES 062-047593 REGISTERED PROFESSIONAL ENGINEER

APPROVED DATE
OFFICER IN CHARGE
APPROVED DATE 9/12/94
EFD FOR COMMANDER, NAVFAC

ARCH. & ENGR. SEAL

SIZE	CODE IDENT NO.	NAVFAC DRAWING NO.	DRAWING NO.
F	80091	5276440	C8-4
SCALE NONE		CONSTR CONTR NO. N62467-93-C-1143 SPEC 08-93-1143	SHEET 15 OF

Date&time: 08/17/94 07:51:54 User: DBE Filename: P:\PAPER\JCPS0804

R: TTL-0007 FS Ins=0.0	
R: TTL-BCK FS Ins=0.0	
R: JCPA0004 FS Ins=0.0	
R: JCPD0004 FS Ins=0.0	

15

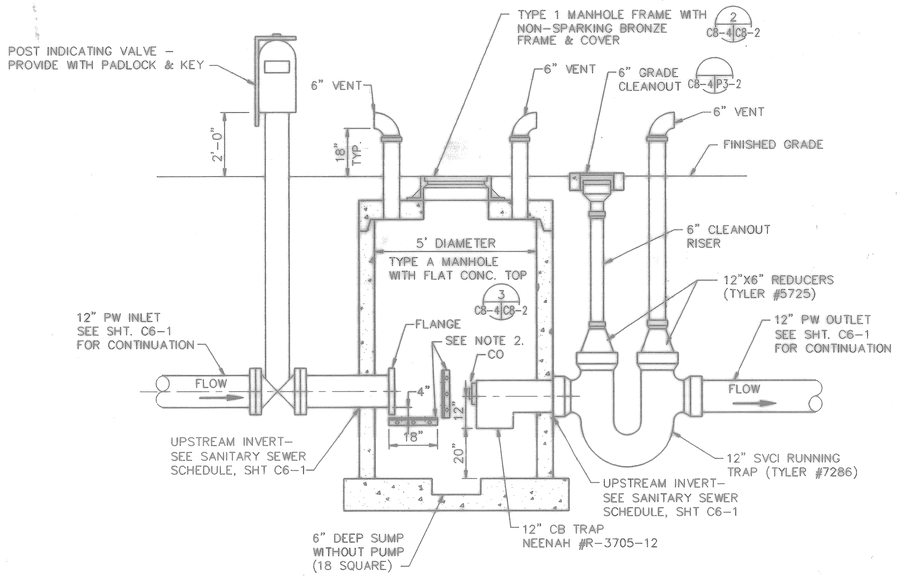

NOTES:

1. PROVIDE SIGNS CENTERED ON EACH SIDE OF THE UNIT (4 REQUIRED) WHICH STATE: "WARNING – PROPANE. NO SMOKING WITHIN 50 FEET".
2. PERFORATED STAINLESS STEEL BAFFLE PLATE (5'–0" LONG X 1/4" THICK) ATTACH TO SIDE OF CHAMBER WITH 2"X2"X1/4" ANGLES AND THREE 1/2" EXPANSION BOLTS EACH SIDE. ATTACH PLATE TO ANGLES WITH STAINLESS STEEL BOLTS, WASHERS AND NUTS (2 PLACES EACH SIDE).

1 C6-1 C8-5 **PROPANE SEPARATION CHAMBER**
SCALE: NONE

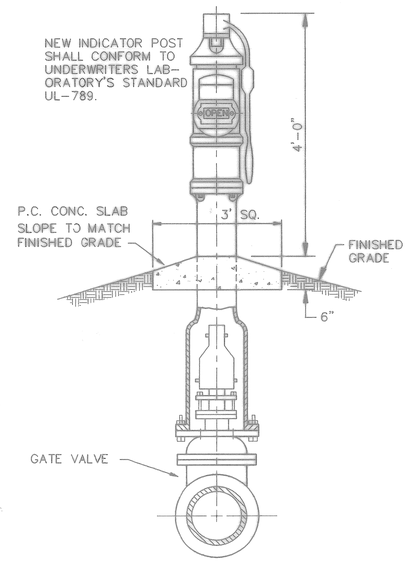

2 C6-1 C8-5 **POST INDICATOR VALVE**
SCALE: NONE

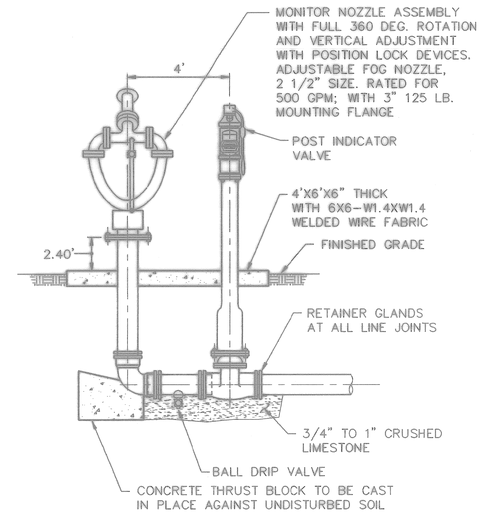

3 C6-1 C8-5 **MONITOR HYDRANT INSTALLATION**
SCALE: NONE

Date&time: 08/20/94 10:17:26 User: DBE Filename: P:\PAPER\JCPS0805

P: TTL-HDR07 PS	Xrs=0,0		
P: TTL-BLOK PS	Xrs=0,0		
P: JCPA0805 PS	Xrs=0,0		
P: -JCS0805 PS	Xrs=0,0		

FOR OFFICIAL USE ONLY

RECORD DRAWING
DATE 06/08/98

DATE 07-31-97 DWN AS-BUILT, NO CORRECTIONS ST. ____ DSTVL

Knight Architects Engineers Planners, Inc.
5400 West Rosedale Street
Columbia, S.C. 29201
A Leader in Science & Associates, Inc. Company
Copyright 1994 Knight Architects Engineers Planners, Inc.

DSGN BARNES, ERICKSON, KLODZEN
SUPV VICK CH. ENGR
SUBMITTED BY DATE
FOR NAVFAC USE
EIC ____ ER ____
FPE ____ OR ____
APPROVED DATE
OFFICER IN CHARGE
APPROVED DATE
CTO FOR COMMANDER NAVFAC 9/12/94

DEPARTMENT OF THE NAVY NAVAL FACILITIES ENGINEERING COMMAND
SOUTHERN DIVISION
CHARLESTON, S.C.
NAVAL TRAINING CENTER GREAT LAKES, ILLINOIS

DAMAGE CONTROL SCHOOL
SITE DETAILS

SIZE	CODE IDENT NO.	NAVFAC DRAWING NO.	DRAWING NO.
F	80091	5276441	C8-5
		CONSTR CONTR NO. N62467-93-C-1143	
SCALE NONE		SPEC 08-93-1143	SHEET 16 OF

DONALD G. BARNES 062-047593 REGISTERED PROFESSIONAL ENGINEER OF NORTH CAROLINA

ARCH. & ENGR. SEAL

91

NOTES:

GUY ALL TREES 3" CAL. AND OVER
STAKE TREES UNDER 3" CAL.

TREE SHALL BEAR SAME RELATION TO FINISHED GRADE AS IT BORE TO PREVIOUS GRADE.

SET STAKES VERTICAL AND AT SAME HEIGHT

PRUNE TO THIN AND SHAPE TREE CANOPY

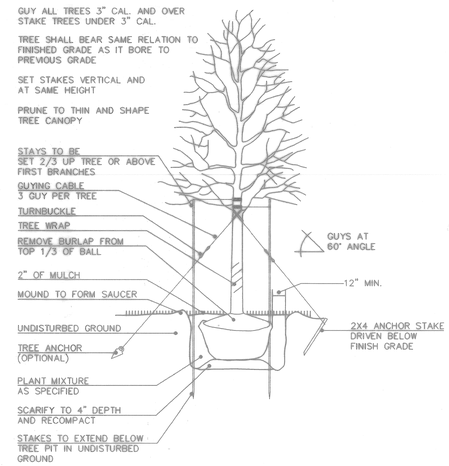

1 C10-1 C8-6 **DECIDUOUS TREE PLANTING**
SCALE: NONE

NOTES:

NEVER CUT LEADERS

PRUNE TO THIN AND SHAPE TREE CANOPY.

TREE SHALL BEAR SAME RELATION TO FINISHED GRADE AS IT BORE TO PREVIOUS GRADE.

SET TREE STAKES VERTICAL AND AT SAME HEIGHT.

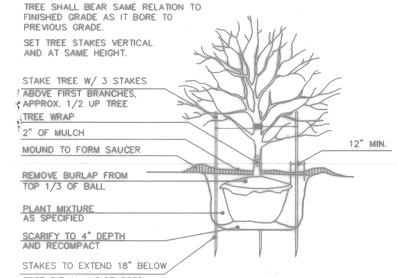

2 C10-1 C8-6 **ORNAMENTAL TREE PLANTING**
SCALE: NONE

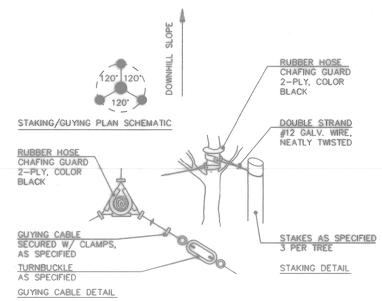

3 C10-1 C8-6 **TREE STAKING AND GUYING**
SCALE: NONE

NOTES:

DO NOT PRUNE EVERGREENS EXCEPT TO REMOVE DEAD OR BROKEN BRANCHES.

THIN BRANCHES AND FOLIAGE (NOT ALL BRANCH TIPS) BY 1/3, RETAINING NORMAL PLANT SHAPE (EXCEPT EVERGREEN).

REMOVE BURLAP FROM TOP 1/3 OF BALL OR, WITH CONTAINER PLANTS, REMOVE POTS AND SPLIT BALLS AS SPECIFIED.

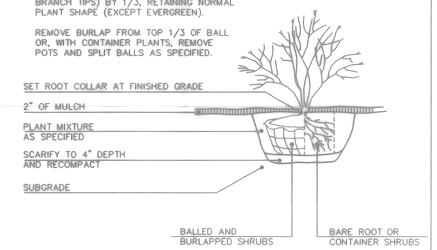

4 C10-1 C8-6 **SHRUB PLANTING**
SCALE: NONE

FOR OFFICIAL USE ONLY

RECORD DRAWING
DATE 06/08/98

REV 07-31-97 REASON AS-BUILT, NO CORRECTIONS BY DRW. B.B.

PARSONS ENGINEERING FRANKLIN, TN.
CAR TRAIL INCORPORATED
CHARLESTON, SC
CHARGES IN INK
A CORPORATE DIVISION OF PARSONS ENGINEERING, INC.
A CORPORATE DIVISION OF PARSONS ENGINEERING, INC.

DEPARTMENT OF THE NAVY — NAVAL FACILITIES ENGINEERING COMMAND
SOUTHERN DIVISION
CHARLESTON, S.C.

DSN: BARNES, ERICKSON, KLODZE
DSN: WOK On Base
SUBMITTED BY: DATE
PM: DATE
EIC: DR:
FPC: DR:

NAVAL TRAINING CENTER — GREAT LAKES, ILLINOIS

DAMAGE CONTROL SCHOOL
SITE DETAILS

APPROVED: DATE
DISTRICT CHIEF: DATE
APPROVED: DATE
FACILITIES ENGINEER: 9/24/98

ARCH. & ENGR. SEAL

SIZE	CODE IDENT NO.	NAVFAC DRAWING NO.	DRAWING NO.
F	80091	5276442	C8-6
		CONTR CONST NO. N62467-93-C-1143	
SCAL NONE		SPEC 06-93-1143	SHEET 17 OF

Date&time: 08/17/94 07:56:32 User: DBE Filename: P:\PAPER\JCPS0806

REV	DATE	BY	CHANGE
A	07/31/97	PS	AS-BUILT
B	06/08/98	PS	AS-BUILT

BORING NO. B-1

STATION N/A
PROJECT DAMAGE CONTROL SCHOOL — PROJ. NO. 6007-1
LOCATION GREAT LAKES NTC — DATE OF BORING 12/29/92
BORINGS BY P.S.I., INC. — LOG NO. 152-25085
SURF. WATER EL. N/A
GRD. WATER EL. -20 FT.
AFTER N/A HOURS

GROUND SURFACE ELEV. N/A

ELEVATION	U.S.C.	SAMPLE	N	Qu t\s.f.	Qp t\s.f.	Wc (%)
BROWN, MOIST VERY STIFF SILTY CLAY WITH A TRACE OF SAND AND GRAVEL	CL	1SS	13	–	1.75	17.2
-5	CL	2SS	16	–	3.75	17.0
GRAY, MOIST CLAY WITH A TRACE OF GRAVEL	CL	3SS	30	2.56	3.0	13.1
-10	SP	4SS	49	–	–	23.0
GRAY, MOIST, DENSE TO VERY DENSE MEDIUM TO COARSE GRAINED SAND						
-15	SP	5SS	65	–	–	20.1
-20	SP	6SS	70	–	–	18.8
-25	SP	7SS	55	–	–	19.3
-30	SP	8SS	25	–	–	15.1
-35	SP	9SS	27	–	–	20.9
-40						
GRAY, MOIST SILT	MH	10SS	50	–	–	15.0

BOTTOM OF BORING AT 41.5'

BORING NO. B-2

STATION N/A
PROJECT DAMAGE CONTROL SCHOOL — PROJ. NO. 6007-1
LOCATION GREAT LAKES NTC — DATE OF BORING 12/18/92
BORINGS BY P.S.I., INC. — LOG NO. 152-25085
SURF. WATER EL. N/A
GRD. WATER EL. -25 FT.
AFTER N/A HOURS

GROUND SURFACE ELEV. N/A

ELEVATION	U.S.C.	SAMPLE	N	Qu t\s.f.	Qp t\s.f.	Wc (%)
2.5" ASPHALT & 6.5" CONCRETE						
BROWN, MOIST, HARD SILTY CLAY WITH A TRACE OF SAND AND GRAVEL	CL	1SS	25	–	2.75	17.9
-5	CL	2SS	14	–	–	20.3
-10	CL	3SS	42	4.17	4.5+	13.9
GRAY, MOIST, VERY FINE GRAINED SAND	SP	4SS	53	–	–	21.7
-15	SP	5SS	78	–	–	19.2
-20						
GRAY, MOIST SILT	MH	6SS	65	–	–	13.1
-25	MH	7SS	70	–	–	18.7
-30	MH	8SS	92	–	–	14.7
-35	MH	9SS	111	–	–	10.5
-40						
	MH	10SS	52	–	–	13.5

BOTTOM OF BORING AT 41.5'

BORING NO. B-3

STATION N/A
PROJECT DAMAGE CONTROL SCHOOL — PROJ. NO. 6007-1
LOCATION GREAT LAKES NTC — DATE OF BORING 12/18/92
BORINGS BY P.S.I., INC. — LOG NO. 152-25085
SURF. WATER EL. N/A
GRD. WATER EL. -30 FT.
AFTER N/A HOURS

GROUND SURFACE ELEV. N/A

ELEVATION	U.S.C.	SAMPLE	N	Qu t\s.f.	Qp t\s.f.	Wc (%)
BROWN, MOIST, STIFF SILTY CLAY WITH A TRACE OF SAND AND GRAVEL	CL	1SS	14	1.65	2.25	25.0
-5	CL	2SS	10	0.99	1.25	21.1
GRAY, MOIST SILT	MH	3SS	49	–	–	18.9
-10	MH	4SS	45	–	–	12.9
-15	MH	5SS	100/5"	–	–	13.1
-20						
GRAY, MOIST HARD SILTY CLAY WITH A TRACE OF GRAVEL	CL	6SS	62	8.24	4.5+	11.0
-25						
GRAY, MOIST SILT	MH	7SS	75	–	–	13.0
-30	MH	8SS	83	–	–	14.3
-35						
GRAY, MOIST, HARD SILTY CLAY WITH A TRACE OF GRAVEL	CL	9SS	77	8.86	–	15.6
-40						
GRAY, MOIST VERY DENSE MEDIUM GRAINED SAND	SP	10SS	33	–	–	18.8

BOTTOM OF BORING AT 41.5'

BORING NO. B-4

STATION N/A
PROJECT DAMAGE CONTROL SCHOOL — PROJ. NO. 6007-1
LOCATION GREAT LAKES NTC — DATE OF BORING 12/23/92
BORINGS BY P.S.I., INC. — LOG NO. 152-25085
SURF. WATER EL. N/A
GRD. WATER EL. -20 FT.
AFTER N/A HOURS

GROUND SURFACE ELEV. N/A

ELEVATION	U.S.C.	SAMPLE	N	Qu t\s.f.	Qp t\s.f.	Wc (%)
BROWN, MOIST TOPSOIL	OL	1AU	–	–	–	21.8
BROWN, MOIST, HARD SILTY CLAY	CL	2SS	17	–	–	17.2
-5	CL	3SS	33	7.01	4.5+	15.3
BROWN, MOIST CLAYEY SILT -10	MH	4SS	21	–	–	26.6
	MH	5SS	26	–	–	22.7
-15	SP	6SS	54	–	–	25.2
GRAY, MOIST, VERY DENSE MEDIUM GRAINED SAND						
-20	SP	7SS	40	–	–	23.5
-25	SP	8SS	63	–	–	17.8
-30	MH	9SS	100/6"	–	–	15.0
GRAY, MOIST SILT						
-35	MH	10SS	85	–	–	16.7
GRAY, MOIST, VERY DENSE, MEDIUM GRAINED SAND -40						
	SP	11SS	88	–	–	22.4

BOTTOM OF BORING AT 41.5'

BORING NO. B-5

STATION N/A
PROJECT DAMAGE CONTROL SCHOOL — PROJ. NO. 6007-1
LOCATION GREAT LAKES NTC — DATE OF BORING 12/15/92
BORINGS BY P.S.I., INC. — LOG NO. 152-25085
SURF. WATER EL. N/A
GRD. WATER EL. -35 FT.
AFTER N/A HOURS

GROUND SURFACE ELEV. N/A

ELEVATION	U.S.C.	SAMPLE	N	Qu t\s.f.	Qp t\s.f.	Wc (%)
2.5" ASPHALT & 6" CONCRETE						
BROWN, MOIST HARD SILTY CLAY WITH A TRACE OF SAND AND GRAVEL	CL	1SS	24	–	4.5+	15.5
-5	CL	2SS	30	–	4.5+	15.4
BROWN, MOIST SILT	MH	3SS	26	–	–	26.1
-10	CL	4SS	11	2.31	2.25	64.1
GRAY, MOIST, VERY STIFF CLAY						
-15	SP	5SS	100	–	–	15.9
GRAY, MOIST, VERY DENSE FINE GRAINED SAND						
-20	SP	6SS	132	–	–	20.9
-25	SP	7SS	140	–	–	19.8
-30						
GRAY, MOIST CLAY WITH A TRACE OF GRAVEL	CL	8SS	100/6"	–	–	14.3
-35						
GRAY, MOIST, VERY DENSE MEDIUM SAND TO GRAVEL	SP	9SS	150	–	–	10.7
-40						
GRAY, MOIST CLAY WITH A TRACE OF GRAVEL	CL	10SS	145	–	–	15.2

BOTTOM OF BORING AT 41.5'

BORING NO. B-6

STATION N/A
PROJECT DAMAGE CONTROL SCHOOL — PROJ. NO. 6007-1
LOCATION GREAT LAKES NTC — DATE OF BORING 12/17/92
BORINGS BY P.S.I., INC. — LOG NO. 152-25085
SURF. WATER EL. N/A
GRD. WATER EL. -35 FT.
AFTER N/A HOURS

GROUND SURFACE ELEV. N/A

ELEVATION	U.S.C.	SAMPLE	N	Qu t\s.f.	Qp t\s.f.	Wc (%)
2.5" ASPHALT & 6" CONCRETE						
BROWN, MOIST HARD SILTY CLAY WITH A TRACE OF SAND AND GRAVEL	CL	1SS	25	–	–	24.3
-5	CL	2SS	21	7.01	4.5+	18.4
BROWN, MOIST VERY DENSE MEDIUM GRAINED SAND -10	SP	3SS	27	–	–	19.7
	SP	4SS	32	–	–	18.6
-15						
GRAY, MOIST, VERY STIFF SILT	MH	5SS	73	3.46	3.0	15.6
-20	MH	6SS	71	–	–	15.7
-25	MH	7SS	100/6"	–	–	14.0
-30						
GRAY, MOIST, HARD CLAY WITH A TRACE OF GRAVEL	CL	8SS	68	7.63	4.5+	14.2
-35						
GRAY, MOIST, VERY DENSE FINE GRAINED SAND	SP	9SS	35	–	–	16.7
-40						
GRAY, MOIST, STIFF CLAY WITH A TRACE OF GRAVEL	CL	10SS	14	–	1.25	18.4

BOTTOM OF BORING AT 41.5'

BORING NO. B-7

STATION N/A
PROJECT DAMAGE CONTROL SCHOOL — PROJ. NO. 6007-1
LOCATION GREAT LAKES NTC — DATE OF BORING 12/30/92
BORINGS BY P.S.I., INC. — LOG NO. 152-25085
SURF. WATER EL. N/A
GRD. WATER EL. -20 FT.
AFTER N/A HOURS

GROUND SURFACE ELEV. N/A

ELEVATION	U.S.C.	SAMPLE	N	Qu t\s.f.	Qp t\s.f.	Wc (%)
BROWN, MOIST, VERY STIFF SILTY CLAY WITH A TRACE OF SAND AND GRAVEL	CL	1SS	15	–	2.5	19.5
-5	CL	2SS	30	6.60	4.5	14.5
-10	CL	3SS	14	2.06	0.75	16.9
	CL	4SS	16	2.31	1.25	17.5
GRAY, MOIST, VERY STIFF CLAY WITH A TRACE OF GRAVEL						
-15	SP	5SS	57	–	–	13.8
GRAY, MOIST, VERY DENSE COARSE GRAINED SAND						
-20	SP	6SS	44	–	–	24.3
-25	SP	7SS	41	–	–	19.0
-30						
GRAY, MOIST, VERY STIFF SILTY CLAY	CL	8SS	48	–	–	21.3
-35						
	CL	9SS	14	–	–	15.0
-40						
	CL	10SS	75	2.97	3.0	18.7

BOTTOM OF BORING AT 41.5'

LEGEND AND NOTES FOR SOIL BORINGS

- N — STANDARD PENETRATION TEST. NUMBER OF BLOWS PER FOOT TO DRIVE 2" O.D. SPLIT SPOON SAMPLER 12" WITH 140 LB. HAMMER FALLING 30".
- Qu — UNCONFINED COMPRESSIVE STRENGTH IN TONS PER SQUARE FOOT
- Qp — PENETROMETER VALUE, UNCONFINED COMPRESSIVE STRENGTH IN TONS PER SQUARE FOOT.
- Wc — WATER CONTENT AS PERCENTAGE OF OVEN DRIED WEIGHT.
- U.S.C. — UNIFIED SOIL CLASSIFICATION
- ▼ — APPARENT GROUND WATER LEVEL AT TIME NOTED AFTER COMPLETION.
- SS — SPLIT-SPOON 1-3/8" I.D., 2" O.D., EXCEPT WHERE NOTED.
- ST — SHELBY TUBE – 3" O.D., EXCEPT WHERE NOTED
- AU — AUGER SAMPLE
- DB — DIAMOND BIT.
- CB — CARBIDE BIT.
- WS — WASHED SAMPLE.
- B — BULGE FAILURE
- S — SHEAR FAILURE
- E — ESTIMATED VALUE
- LL — LIQUID LIMIT IN PERCENTAGE
- PI — PLASTICITY INDEX IN PERCENT

FOR OFFICIAL USE ONLY

RECORD DRAWING
DATE 06/05/98

DATE 07-31-97 DESC. AS-BUILT, NO CORRECTIONS BY D.L.W.

Knight Architects Engineers Planners, Inc.
540 West Randolph Street
Chicago, IL 60661
Established in 1946
A Leader in Knight & Associates, Inc. Companies
Copyright 1994 Knight Architects Engineers Planners, Inc.

DSGN. BARNES/ERICKSON
SURV. VICK — CH. ENGR.
SUBMITTED BY — DATE 8/1/97
DIV. MANAGER — DATE
EIC — DIR.
FPE — DIR.
APPROVED — DATE
OFFICER in CHARGE
APPROVED — DATE 9/12/94
CO FOR COMMANDER, NAVFAC

DEPARTMENT OF THE NAVY — NAVAL FACILITIES ENGINEERING COMMAND
SOUTHERN DIVISION
CHARLESTON, S.C.

NAVAL TRAINING CENTER — GREAT LAKES, ILLINOIS

DAMAGE CONTROL SCHOOL BORING LOGS

SIZE F — CODE IDENT NO. 80091 — NAVFAC DRAWING NO. 5276443 — DRAWING NO. C9-1
CONSTR CONTR NO. N62467-93-C-1143
SCALE NONE — SPEC 08-93-1143 — SHEET 18 OF

ARCH. & ENGR. SEAL

DONALD G. BARNES 062-047599 REGISTERED PROFESSIONAL ENGINEER ILLINOIS

Date&time: 08/03/94 10:46:26 User: DDE Filename: R:\PAPER\UDPS0001

B: TIL-KNGT PS Scale:0.0
B: TIL-TOPO PS Scale:0.0
B: ADP0001 PS Scale:0.0