RPB-1

SERVICE: 208Y/120V.,3ø,4W
MAINS: 100A.MAIN C/B
CONN. WATTS: PHASE A: 10840 PHASE B: 9086 PHASE C: 9116
MOUNTING: SURFACE TOTAL WATTS: 29042

CIRCUIT USE	PHASE A	PHASE B	PHASE C	TRIP CAP.	CCT No.	CCT No.	TRIP CAP.	PHASE A	PHASE B	PHASE C	CIRCUIT USE
R-RM#B07,B08,B12	1200			20A/1P	1	2	20A/1P	1200			HEAT TRACING
R-RM#B17,B12,B08		1200		20A/1P	3	4	20A/1P		1200		HEAT TRACING
R-RM#B09,B12,B20,B19			1000	20A/1P	5	6	20A/1P			1200	HEAT TRACING
UH-B07A,UH-B07B, UH-B17A	1100			30A/1P	7	8	20A/1P	1100			UH-B17B,UHB17C
UH-B06,UH-B12A,UH-B12B		1100		30A/1P	9	10	20A/1P		750		UH-B12B,UH-B12C, UH-B10A
EWC			1000	20A/1P	11	12	20A/1P			600	ELEV. PIT L & R
	1380				13	14		1380			
WASHER		1380		20A/3P	15	16	20A/3P		1380		WASHER
			1380		17	18				1380	
	1380				19	20	20A/1P	1000			DDC-1
WASHER		1380		20A/3P	21	22	20A/1P		1000		DDC-2
			1380		23	24	20A/1P				SPARE
EXT. LIGHTING	600			20A/1P	25	26	20A/1P	500			LIGHTS IN PLENUM RF-1
AIR COMPRESSOR		696		20A/1P	27	28	20A/1P		864		EF-138, EF-B19
PP-30			864	20A/1P	29	30	20A/1P			500	ELEV. CAB LIGHT
MP-1,MP-2	864			20A/1P	31	32	20A/1P				COOLING TOWER
WATER TREATMENT PUMP		1000		20A/1P	33	34	20A/1P				DRAIN HEAT
UH-B10A R-COL. LINE 12					35	36	20A/1P		(A)		TRACE
SPACE			(A)		37	38	20A/1P				DDC2 DAMPERS
OVERHEAD DOOR					39	40	20A/1P				SPARE
SPACE					41	42	20A/1P				SPARE

RPB-2

SERVICE: 208Y/120V.,3ø,4W
MAINS: 100A.MAIN C/B
CONN. WATTS: PHASE A: 5104 PHASE B: 4732 PHASE C: 3100
MOUNTING: SURFACE TOTAL WATTS: 8677

CIRCUIT USE	PHASE A	PHASE B	PHASE C	TRIP CAP.	CCT No.	CCT No.	TRIP CAP.	PHASE A	PHASE B	PHASE C	CIRCUIT USE
UH-B10B,UH-B10C,	700			20A/1P	1	2	20A/1P	1000			R-RM#B16
UH-B12D,UH-B13,UH-B14		1100		20A/1P	3	4	20A/1P		800		R-RM#B10,B14
LIGHTS IN PLENUM SF-1			1100	20A/1P	5	6	20A/1P			500	OIL/WATER SEPARATOR (A)
UH-B16A,UH-B16B	720			20A/1P	7	8	20A/1P	1100			UH-21,UH-B16F,UH-B16E
PP-21,UH-16C		1056		20A/1P	9	10	20A/1P		912		UH-16D,PP-20
SOLENOID VALVE			500	20A/1P	11	12	20A/1P			1188	PP-14a,PP-14b,PP-15
CP-3 & 4	864			20A/1P	13	14	20A/1P	1188			PP-12,PP-13a,PP-13b
EMERGENCY SHOWER & WC (A)		864	01	20A/1P	15	16	20A/1P		1224		AD-1,WH-1
SPARE				20A/1P	17	18	20A/1P			1056	PP-31,WH-2
SPARE				20A/1P	19	20	20A/1P				SPARE
SPARE				20A/1P	21	22	20A/1P				PP-1 & 2 CONT. CIRCUIT (A)
PP-3 & 4 CONT. CIRCUIT (A)				20A/1P	23	24	20A/1P				SPARE
SPARE				20A/1P	25	26	20A/1P				SPARE
SPARE				20A/1P	27	28	20A/1P				SPARE
SPARE				20A/1P	29	30	20A/1P				SPARE
SPARE				20A/1P	31	32	20A/1P				SPARE
SPARE				20A/1P	33	34	20A/1P				SPARE
SPARE				20A/1P	35	36	20A/1P				SPARE
SPARE				20A/1P	37	38	20A/1P				SPARE
SPARE				20A/1P	39	40	20A/1P				SPARE
SPARE				20A/1P	41	42	20A/1P				SPARE

RP1-1

SERVICE: 208Y/120V.,3ø,4W
MAINS: 150A.MAIN C/B
CONN. WATTS: PHASE A: 16100 PHASE B: 14800 PHASE C: 14476
MOUNTING: SURFACE TOTAL WATTS: 45376

CIRCUIT USE	PHASE A	PHASE B	PHASE C	TRIP CAP.	CCT No.	CCT No.	TRIP CAP.	PHASE A	PHASE B	PHASE C	CIRCUIT USE
ELECT. DRYER	2300			30A/1P	1	2	30A/1P	2300			ELECT. DRYER
ELECT. DRYER		2300		30A/1P	3	4	30A/1P		2300		ELECT. DRYER
ELECT. DRYER			2300	30A/1P	5	6	30A/1P			2300	ELECT. DRYER
R-RM#140,121	1200			20A/1P	7	8	20A/1P	1000			R-RM#128,129,119
CUH-140,CUH-120		1600		20A/1P	9	10	20A/1P		200		L-COOLING TOWER
EWC.			1000	20A/1P	11	12	20A/1P			800	R-RM#133
ELECT. DRYER	2300			30A/1P	13	14	20A/1P	1000			DDC-3 PANEL
ELECT. DRYER		2300		30A/1P	15	16	20A/1P		1200		R-RM#132,131,127
R-RM#122,123,165,140,124			1200	20A/1P	17	18	20A/1P			1600	UH-132A,UH-132B
R-RM#124,125,140,138	1000			20A/1P	19	20	30A/1P	2300			ELECT. DRYER
R-RM#161 TELE.		400		20A/1P	21	22	30A/1P		2300		ELECT. DRYER
R-RM#130			800	20A/1P	23	24	20A/1P			1600	EF-160,PP-25
R-RM#218 FLR. MTD.	600			20A/1P	25	26	20A/1P	600			R-RM#218 FLR. MTD.
R-RM#218 FLR. MTD.		600		20A/1P	27	28	20A/1P		600		R-RM#218 FLR. MTD.
SHOWER STROBE ALARM			1000	20A/1P	29	30	*		(A)	1176	GARAGE DOOR OPENER
GARAGE DOOR OPENER	1000		(A)	20A/3P	31	32	20A/1P	500			CO DETECTORS
GARAGE DOOR OPENER		1000		*	33	34	20A/1P		400		SR-RM#133
CUH-124,CUH-125			700	20A/1P	35	36	20A/1P			696	PP-24
ELECT. DRYER	2300			30A/1P	37	38	20A/1P				SPARE
SPARE				20A/1P	39	40	20A/1P				SPARE
POWER LOSS RELAY			(A)	20A/1P	41	42	20A/1P				SPARE

RP1-2

SERVICE: 208Y/120V.,3ø,4W
MAINS: 150A.MAIN C/B
CONN. WATTS: PHASE A: 13740 PHASE B: 8735 PHASE C: 10410
MOUNTING: RECESSED TOTAL WATTS: 32885

CIRCUIT USE	PHASE A	PHASE B	PHASE C	TRIP CAP.	CCT No.	CCT No.	TRIP CAP.	PHASE A	PHASE B	PHASE C	CIRCUIT USE
LTG. RM#143	1620			20A/1P	1	2	20A/1P	1620			LTG RM#240,241
LTG RM#145		810		20A/1P	3	4	20A/1P		1350		LTG RM#143
LTG RM#144			810	20A/1P	5	6	20A/1P			600	R-RM#156
CUH-159,CUH-134A	1600			20A/1P	7	8	20A/1P	600			R-RM#156
CUH-134B,CUH-139		1100		20A/1P	9	10	20A/1P		400		R-RM#156
CUH-141,CUH-140B			1600	20A/1P	11	12	20A/1P				SPARE
R-RM3134,139,164	800			20A/1P	13	14	20A/1P				SPARE
R-RM#137,136,140		800		20A/1P	15	16	30A/1P		2300		ELECT. DRYER
ELECT. DRYER			2300	30A/1P	17	18	30A/1P			2300	ELECT. DRYER
ELECT. DRYER	2300			30A/1P	19	20	20A/1P	600			R-RM#157,155
R-RM#143,154 + LTG.		1275		20A/1P	21	22	20A/1P		400		R-RM#157
R-RM#154,147,146			1200	20A/1P	23	24	20A/1P			1600	CUH-148A,CUH-148B
ELECT. DRYER	2300			30A/1P	25	26	30A/1P	2300			ELECT. DRYER
VF-146		696		20A/1P	27	28	20A/1P		300		L-RM#133
SPARE				20A/1P	29	30	20A/1P				SPARE
SPARE				20A/1P	31	32	20A/1P				SPARE
SPARE				20A/1P	33	34	20A/1P				SPARE
SPARE				20A/1P	35	36	20A/1P				SPARE
SPARE				20A/1P	37	38	20A/1P				SPARE
SPARE				20A/1P	39	40	20A/1P				SPARE
SPARE				20A/1P	41	42	20A/1P				SPARE

* A & B PHASES OF GARAGE DOOR CIRCUIT (A)

RP1-3

SERVICE: 208Y/120V.,3ø,4W
MAINS: 150A.MAIN C/B
CONN. WATTS: PHASE A: 11310 PHASE B: 10950 PHASE C: 11700
MOUNTING: SURFACE TOTAL WATTS: 33960

CIRCUIT USE	PHASE A	PHASE B	PHASE C	TRIP CAP.	CCT No.	CCT No.	TRIP CAP.	PHASE A	PHASE B	PHASE C	CIRCUIT USE
LTG RM#B04,B03	1300			20A/1P	1	2	20A/1P	1400			LTG RM#202
R-RM#B04		1000		20A/1P	3	4	20A/1P		1000		R-RM#202
LTG RM#B04			1600	20A/1P	5	6	20A/1P			900	LTG RM#202
LTG RM#B01,105	900			20A/1P	7	8	20A/1P	900			LTG RM#202
R-RM#B01		600		20A/1P	9	10	20A/1P		1000		UH-2,UH-1
LTG RM#101			1500	20A/1P	11	12	20A/1P			1000	UH-3,UH-4
DAMPER MTRS VIA DTC				20A/1P	13	14	20A/1P	1000			UH-5,UH-6
DAMPER MTRS VIA DTC		400		20A/1P	15	16	20A/1P		1000		UH-7,UH-9
DAMPER MTRS VIA DTC			800	20A/1P	17	18	20A/1P			1000	UH-8,UH-10
SPARE	450			20A/1P	19	20	20A/1P	1680			UH-25,UH-26
TIME CLOCK		450	(A)	20A/1P	21	22	20A/1P		1200		UH-27,UH-28
LTG. EXTERIOR			900	20A/1P	23	24	20A/1P			1000	UH-29,UH-30
R-HVU-3,4&5	600		(A)	20A/1P	25	26	20A/1P	800			R-RM#104,101
HVU-3,HVU-4,HVU-5 CONTROLS		600		20A/1P	27	28	20A/1P		600		R-RM#101
R-HVU-1,2&7			600	20A/1P	29	30	20A/1P		(A)	600	R-RM#101
HVU-1,HVU-2,HVU-7 CONTROLS	600		(A)	20A/1P	31	32	20A/1P				LTG RM#B04
R-RM#308		1000		20A/1P	33	34	20A/1P		(A)		UH-18,UH-19
R-RM#404			1000	20A/1P	35	36	20A/1P			1200	R-RM#113,UH-20
DDC RM#304				20A/1P	37	38	20A/1P	1680			UH-31,UH-32
UH-36,UH-37		600		20A/1P	39	40	20A/1P				SPARE
UH-11				20A/1P	41	42	20A/1P				SPARE

RP2-1

SERVICE: 208Y/120V.,3ø4W
MAINS: 100A.MAIN C/B
CONN. WATTS: PHASE A: 15352 PHASE B: 11416 PHASE C: 11536
MOUNTING: SURFACE TOTAL WATTS: 38304

CIRCUIT USE	PHASE A	PHASE B	PHASE C	TRIP CAP.	CCT No.	CCT No.	TRIP CAP.	PHASE A	PHASE B	PHASE C	CIRCUIT USE
UH-143A,UH-154	1600			20A/1P	1	2	20A/1P	2160			CUH-230,CUH-235
R-RM#218,239		800		20A/1P	3	4	20A/1P		2080		UH-234,UH-234,UH-237
R-RM#242			1000	20A/1P	5	6	20A/1P			3360	R-RM#234,232
DAC-1	1176			20A/1P	7	8	20A/1P	3640			R-RM#243,231,237
DAC-2		1176		20A/1P	9	10	20A/1P		2160		R-RM#231,TV
DAC-3			1176	20A/1P	11	12	20A/1P			1000	R-PROJ. SCREEN
DAC-4	1176			20A/1P	13	14	20A/1P	800			R-RM#228,277,CUH-229
R-RM#318		1000		20A/1P	15	16	20A/1P		1200		R-RM#227,TV
R-RM#318			1000	20A/1P	17	18	20A/1P			1200	L-RM#234
R-RM#318	1000			20A/1P	19	20	20A/1P	1200			L-RM#234
R-RM#318		1000		20A/1P	21	22	20A/1P		200		L-RM#237
R-RM#318			1000	20A/1P	23	24	20A/1P			1600	R-RM#322
R-RM#318	1000			20A/1P	25	26	20A/1P	1600			R-RM#322
VF-239		696		20A/1P	27	28	20A/1P		1600		R-RM#322
VF-238			696	20A/1P	29	30	20A/1P				SPARE
VF-242	696			20A/1P	31	32	20A/1P				SPARE
SPARE				20A/1P	33	34	20A/1P				SPARE
SPARE				20A/1P	35	36	20A/1P				SPARE
SPARE				20A/1P	37	38	20A/1P				SPARE
SPACE					39	40					SPACE
SPACE					41	42					SPACE

FOR OFFICIAL USE ONLY

RECORD DRAWING DATE 06/08/98

JRO 05/28/98

Rev	DATE	ISSUE	BY	INITIAL
(A)	07-31-97	CORRECTED TO AS-BUILT	LTN	R.R.N.

Knight Architects Engineers Planners, Inc.
549 West Randolph Street
Chicago, IL 60661
Established in 1945
A Lester B. Knight & Associates, Inc. Company
© Copyright 1994 Knight Architects Engineers Planners, Inc.

DEPARTMENT OF THE NAVY — NAVAL FACILITIES ENGINEERING COMMAND
SOUTHERN DIVISION
CHARLESTON, S.C.

NAVAL TRAINING CENTER — GREAT LAKES, ILLINOIS

DAMAGE CONTROL SCHOOL
PANEL SCHEDULES

DSGN ANG DR JACQUEZ CHK SEABORG
SUPV POPOVIC CH ENGR
SUBMITTED BY DATE
FIRM MEMBER TITLE
EIC BR HD
FPE DIR
APPROVED DATE
OFFICER IN CHARGE
APPROVED DATE
EFD FOR COMMANDER, NAVFAC

ARCH. & ENGR. SEAL

SIZE	CODE IDENT NO.	NAVFAC DRAWING NO.	DRAWING NO.
F	80091	5276645	E6-3

CONSTR CONTR NO. N62467-93-C-1143
SCALE NOT TO SCALE SPEC 06-93-1143 SHEET 231 OF

Date&time: 10/30/97 16:03:10 User: TWhite Filename: P:\PAPER\CHANGED\LTN\JEPS2603

RP2-3

SERVICE: 208Y/120V.,3ø,4W+GRD.
MAINS: 150A.MAIN C/B
CONN. WATTS: PHASE A: 9520 PHASE B: 6180 PHASE C: 7940
MOUNTING: SURFACE TOTAL WATTS: 23640

CIRCUIT USE	PHASE A	PHASE B	PHASE C	TRIP CAP.	CCT No.	CCT No.	TRIP CAP.	PHASE A	PHASE B	PHASE C	CIRCUIT USE
UH-24,UH-23,EF-1,	1600			20A/1P	1	2	20A/1P				SPARE
UH-16,UH-21,UH-22		1080		20A/1P	3	4	20A/1P		1200		R-107,UH-17
UH-14,UH-15			1200	20A/1P	5	6	20A/1P			1200	UH-34,UH-36
EF-7,UH-40,UH-41	1600			20A/1P	7	8	20A/1P	1000			R-310,301
EF-6,UH-38		900		20A/1P	9	10	20A/1P		1000		R-401,403
UH-45,UH-44,UH-46			900	20A/1P	11	12	20A/1P			1000	R-401,402
UH-42,UH-43	200			20A/1P	13	14	20A/1P	1000			R-401,404
UH-39		864		20A/1P	15	16	20A/1P		700		EF-12
SPARE (A)				20A/1P	17	18	20A/1P				SPARE
PURGE CONTROLS	300			20A/1P	19	20	20A/1P				SPARE
EF-13		864		20A/1P	21	22	20A/1P			(A)	SPARE
EF-8			870	20A/1P	23	24	20A/1P				SPARE
EF-9	870			20A/1P	25	26	20A/1P	700			HTEF-7
SPARE				20A/1P	27	28	20A/1P				SPARE
R-ROOF			800	20A/1P	29	30	20A/1P			1600	EF-11,UH-12,UH-13
SPARE				20A/1P	31	32	20A/1P	600			UH-33,UH-35
SPARE				20A/2P	33	34	20A/2P				SPARE
SPARE				20A/2P	35	36	20A/2P				SPARE
SPARE				20A/2P	37	38	20A/2P				SPARE
SPARE				20A/1P	39	40	20A/1P				SPARE
SPARE				20A/1P	41	42	20A/1P				SPARE

RP3-1

SERVICE: 208Y/120V.,3ø,4W
MAINS: 100A.MAIN C/B
CONN. WATTS: PHASE A: 2000 PHASE B: 2000 PHASE C: 800
MOUNTING: RECESSED TOTAL WATTS: 4800

CIRCUIT USE	PHASE A	PHASE B	PHASE C	TRIP CAP.	CCT No.	CCT No.	TRIP CAP.	PHASE A	PHASE B	PHASE C	CIRCUIT USE
SPARE				20A/1P	1	2	20A/1P	800			R-RM#322
SPARE				20A/1P	3	4	20A/1P		1000		R-RM#322
SPARE				20A/1P	5	6	20A/1P			800	CUH-320,CUH-321
SPARE				20A/1P	7	8	20A/1P				SPARE
SPARE				20A/1P	9	10	20A/1P				EF-156 (A)
SPARE				20A/1P	11	12	20A/1P			696	EF-236
R-RM#318	600			20A/1P	13	14	20A/1P	864			EF-237
R-RM#318		800		20A/1P	15	16	20A/1P		200		R-ROOF
R-RM#318,319				20A/1P	17	18	20A/1P				SPARE
SPARE				20A/1P	19	20	20A/1P				SPARE
SPARE				20A/1P	21	22	20A/1P				SPARE
SPARE				20A/1P	23	24	20A/1P				SPARE
SPARE				20A/1P	25	26	20A/1P				SPARE
SPARE				20A/1P	27	28	20A/1P				SPARE
SPARE				20A/1P	29	30	20A/1P				SPARE
SPARE				20A/1P	31	32	20A/1P				SPARE
SPARE				20A/1P	33	34	20A/1P				SPARE
SPACE					35	36					SPACE
SPACE					37	38					SPACE
SPACE					39	40					SPACE
SPACE					41	42					SPACE

RP2-2

SERVICE: 208Y/120V.,3ø,4W
MAINS: 100A.MAIN C/B
CONN. WATTS: PHASE A: 10090 PHASE B: 9600 PHASE C: 10100
MOUNTING: RECESSED TOTAL WATTS: 29790

CIRCUIT USE	PHASE A	PHASE B	PHASE C	TRIP CAP.	CCT No.	CCT No.	TRIP CAP.	PHASE A	PHASE B	PHASE C	CIRCUIT USE
CUH-228,CUH-230	600			20A/1P	1	2	30A/1P	2300			ELECT. DRYER
VENDING MACH.		1000		20A/1P	3	4	30A/1P		2300		ELECT.DRYER
VENDING MACH.			1000	20A/1P	5	6	30A/1P			2300	ELECT. DRYER
VENDING MACH.	1000			20A/1P	7	8	30A/1P	2300			ELECT. DRYER
R-RM#214		1000		20A/1P	9	10	20A/1P		1000		VENDING MACH.
PROJ. & SCREEN			1000	20A/1P	11	12	20A/1P			1000	VENDING MACH.
R-TV,VCR	890			20A/1P	13	14	20A/1P	1000			VENDING MACH.
R-RM#215,216		800		20A/1P	15	16	20A/1P		1000		EWC
R-RM#216,217			800	20A/1P	17	18	20A/1P			1200	R-RM#222,223,226,225
R-RM#233,218	800			20A/1P	19	20	20A/1P	1000			R-RM#219
R-RM#217,233		800		20A/1P	21	22	20A/1P		400		TELE.
R-RM#228			1100	20A/1P	23	24	20A/1P			600	R-RM#219
PRINTER	1000			20A/1P	25	26	20A/1P	600			R-RM#219
COPIER		1000		20A/1P	27	28	20A/1P		300		CUH-222
DDC-4			500	20A/1P	29	30	20A/1P			600	R-RM#218
SPARE				20A/1P	31	32	20A/1P	600			R-RM#218
SPARE				20A/1P	33	34	20A/1P				SPARE
SPARE				20A/1P	35	36	20A/1P				SPARE
SPARE				20A/1P	37	38	20A/1P				SPARE
SPARE				20A/1P	39	40	20A/1P				SPARE
SPARE				20A/1P	41	42	20A/1P				SPARE

PP3-1

SERVICE: 480Y/277V.,3ø,4W
MAINS: 100A.MAIN C/B
CONN. WATTS: PHASE A: 2400 PHASE B: 2400 PHASE C: 2400
MOUNTING: SURFACE TOTAL WATTS: 7200

CIRCUIT USE	PHASE A	PHASE B	PHASE C	TRIP CAP.	CCT No.	CCT No.	TRIP CAP.	PHASE A	PHASE B	PHASE C	CIRCUIT USE
SPARE				20A/1P	1	2	20A/1P	1200			VAV-319F
VAV-319A		1200		20A/1P	3	4	20A/1P		1200		VAV-319E
VAV-319B			1200	20A/1P	5	6	20A/1P			1200	VAV-319D
VAV-319C	1200			20A/1P	7	8	20A/1P				SPARE
SPARE				20A/1P	9	10	20A/1P				SPARE
SPARE				20A/1P	11	12	20A/1P				SPARE
SPARE				20A/1P	13	14	20A/1P				SPARE
SPARE				20A/1P	15	16	20A/1P				SPARE
SPARE				20A/1P	17	18	20A/1P				SPARE
SPARE				20A/1P	19	20	20A/1P				SPARE
SPARE				20A/1P	21	22	20A/1P				SPARE
SPARE				20A/1P	23	24	20A/1P				SPARE
					25	26					
					27	28					
					29	30					
					31	32					
					33	34					
					35	36					
					37	38					
					39	40					
					41	42					

PROVIDE SHUNT TRIP DEVICE IN PANEL PP3-1 MAIN BREAKER, FOR CONNECTION TO FIRE ALARM AUXILIARY CONTACT.

RP3-2

SERVICE: 208Y/120V.,3ø,4W
MAINS: 100A.MAIN C/B
CONN. WATTS: PHASE A: 10700 PHASE B: 6800 PHASE C: 10200
MOUNTING: RECESSED TOTAL WATTS: 27700

CIRCUIT USE	PHASE A	PHASE B	PHASE C	TRIP CAP.	CCT No.	CCT No.	TRIP CAP.	PHASE A	PHASE B	PHASE C	CIRCUIT USE
VENDING MACH.	1000			20A/1P	1	2	20A/1P	1200			R-RM#314 FLR. MTD.
VENDING MACH.		1000		20A/1P	3	4	20A/1P		1200		R-RM#314 FLR. MTD.
VENDING MACH.			1000	20A/1P	5	6	20A/1P			1200	R-RM#314
CUH-311,UH-309,UH-310	600			20A/1P	7	8	20A/1P	400			R-TELE.
R-RM#307,319		1000		20A/1P	9	10	20A/1P		1000		R-RM#310,309,312,319
R-RM#307,TV			800	20A/1P	11	12	20A/1P			1000	PROJ. SCREEN
PROJ. SCREEN	1000			20A/1P	13	14	20A/1P	1000			R-RM#308
EWC		1000		20A/1P	15	16	20A/1P		800		R-RM#308,TV
ELECT. DRYER			2300	30A/1P	17	18	30A/1P			2300	ELECT. DRYER
ELECT. DRYER	2300			30A/1P	19	20	30A/1P	2300			ELECT. DRYER
DDC-5		500		20A/1P	21	22	20A/1P				SPARE
SPARE				20A/1P	23	24	20A/1P			600	R-ROOF
SPARE				20A/1P	25	26	20A/1P	1000			R-RM#314 FLR MTD.
SPARE				20A/1P	27	28	20A/1P				SPARE
SPARE				20A/1P	29	30	20A/1P				SPARE
SPARE				20A/1P	31	32	20A/1P				SPARE
SPARE				20A/1P	33	34	20A/1P				SPARE
SPACE					35	36					SPACE
SPACE					37	38					SPACE
SPACE					39	40					SPACE
SPACE					41	42					SPACE

FOR OFFICIAL USE ONLY

RECORD DRAWING
DATE 06/08/98

(A) DATE 07-31-97 ISSUE CORRECTED TO AS-BUILT BY LTN INITIAL

Knight Architects Engineers Planners, Inc.
549 West Randolph Street
Chicago, IL 60661
Established in 1909
A Central States A & E Associates, Inc. Company
Copyright 1997 Knight Architects Engineers Planners, Inc.

DEPARTMENT OF THE NAVY
SOUTHERN DIVISION
NAVAL FACILITIES ENGINEERING COMMAND
CHARLESTON, S.C.

DSGN. ANG DR. JACQUEZ CHK. SEABORG
SUPV. POPOVIC CH. ENGR.
SUBMITTED BY DATE
FIRM MEMBER TITLE
EIC BR HD
PE DIR
APPROVED DATE
OFFICER IN CHARGE
APPROVED DATE
FED FOR COMMANDER, NAVFAC

NAVAL TRAINING CENTER GREAT LAKES, ILLINOIS

DAMAGE CONTROL SCHOOL PANEL SCHEDULES

SIZE	CODE IDENT NO.	NAVFAC DRAWING NO.	DRAWING NO.
F	80091	5276646	E6-4

CONSTR CONTR NO. N62467-93-C-1143
SCALE NOT TO SCALE SPEC 06-93-1143 SHEET 22 OF

ARCH. & ENGR. SEAL

Date&time: 10/30/97 16:05:03 User: TWhite Filename: P:\PAPER\CHANGED\LTN\JEPS2604

22

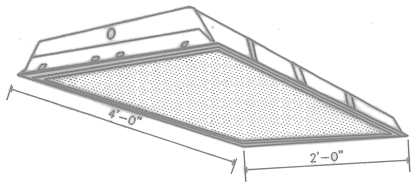

22 GAUGE, ONE PIECE, DIE-FORMED STEEL HOUSING AND END PLATES FINISHED WITH 89% REFLECTIVE, ELECTROSTATICALLY APPLIED BAKED WHITE ALKYD ENAMEL FINISH OVER A PHOSPHATE PRIME COATING WITH RUST INHIBITOR

ENDPLATES ATTACHED TO HOUSING WITH A MINIMUM OF FOUR SCREWS.

HINGED FLAT ALUMINUM LENS DOOR WITH MITERED CORNERS DESIGNED TO FORM A MECHANICAL LIGHT SEAL, FINISHED TO MATCH HOUSING. DOOR TO BE SECURED WITH CAM LATCHES.

SNAP IN BALLAST COVER WITH 277 VOLT ELECTRONIC BALLAST SECURED WITH TWO CAPTIVE BOLTS.

MINIMUM 0.125 INCH THICK, 100%, VIRGIN ACRYLIC, PATTERN 12 PRISMATIC LENS.

PRESSURE LOCK LAMP HOLDERS TO PROVIDE A MINIMUM OF 5-1/4" HORIZONTAL LAMP SPACING.

TYPE "A1" REQUIRES THREE, 32 WATTS, T-8, FLUORESCENT LAMPS.
TYPE "A2" REQUIRES FOUR, 32 WATTS, T-8, FLUORESCENT LAMPS.
TYPE "A3" REQUIRES TWO, 32 WATTS, T-8, FLUORESCENT LAMPS.

FIXTURE TO BE SUITABLE FOR INSTALLATION IN AN INVERTED T-GRID CEILING.

TYPE "A" FIXTURES REQUIRE SLOTS FOR RETURN AIR TO PLENUM CEILING.

FIXTURE TYPE "A1", "A2",& "A3"
NOT TO SCALE

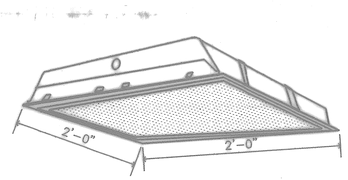

22 GAUGE, ONE PIECE, DIE-FORMED STEEL HOUSING AND END PLATES FINISHED WITH 89% REFLECTIVE, ELECTROSTATICALLY APPLIED BAKED WHITE ALKYD ENAMEL FINISH OVER A PHOSPHATE PRIME COATING WITH RUST INHIBITOR

ENDPLATES ATTACHED TO HOUSING WITH A MINIMUM OF FOUR SCREWS.

HINGED FLAT ALUMINUM LENS DOOR WITH MITERED CORNERS DESIGNED TO FORM A MECHANICAL LIGHT SEAL, FINISHED TO MATCH HOUSING. DOOR TO BE SECURED WITH CAM LATCHES.

SNAP IN BALLAST COVER WITH 277 VOLT BALLAST SECURED WITH TWO CAPTIVE BOLTS.

MINIMUM 0.125 INCH THICK, 100%, VIRGIN ACRYLIC, PATTERN 12 PRISMATIC LENS.

PRESSURE LOCK LAMP HOLDERS.

TWO, 35 WATT, U/3, FLUORESCENT LAMPS.

FIXTURE TO BE SUITABLE FOR INSTALLATION IN AN INVERTED T-GRID CEILING.

FIXTURES REQUIRE SLOTS FOR RETURN AIR TO PLENUM CEILING.

TYPE "B1" SHALL BE SIMILAR TO "B" FIXTURE, "B1" SHALL BE A STATIC FIXTURE ONLY.

FIXTURE TYPE "B"
NOT TO SCALE

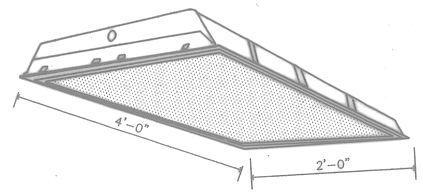

22 GAUGE, ONE PIECE, DIE-FORMED STEEL HOUSING AND END PLATES FINISHED WITH 89% REFLECTIVE, ELECTROSTATICALLY APPLIED BAKED WHITE ALKYD ENAMEL FINISH OVER A PHOSPHATE PRIME COATING WITH RUST INHIBITOR

ENDPLATES ATTACHED TO HOUSING WITH A MINIMUM OF FOUR SCREWS.

HINGED FLAT ALUMINUM LENS DOOR WITH MITERED CORNERS DESIGNED TO FORM A MECHANICAL LIGHT SEAL, FINISHED TO MATCH HOUSING. DOOR TO BE SECURED WITH CAM LATCHES.

SNAP IN BALLAST COVER WITH 277 VOLT ELECTRONIC BALLAST SECURED WITH TWO CAPTIVE BOLTS.

MINIMUM 0.125 INCH THICK, 100%, VIRGIN ACRYLIC, PATTERN 12 PRISMATIC LENS.

PRESSURE LOCK LAMP HOLDERS TO PROVIDE A MINIMUM OF 5-1/4" HORIZONTAL LAMP SPACING.

THREE, 32 WATT, T-8, FLUORESCENT LAMPS.

FIXTURE TO SUITABLE FOR INSTALLATION IN AN INVERTED T-GRID CEILING.

FIXTURE TYPE "C"
NOT TO SCALE

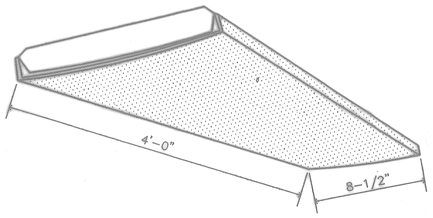

MINIMUM 22 GAUGE STEEL HOUSING WITH FULL LENGTH RIDGIDITY RIBS AND BAKED WHITE ENAMEL FINISH OVER RUST INHIBITING COAT.

INJECTION MOLDED ONE PIECE DIFFUSER ENDS.

NORMAL 0.185" THICK, 100% VIRGIN ACRYLIC, PRISMATIC LENS WITH LINEAR SIDE PRISMS, DESIGNED TO HINGE FROM EITHER SIDE.

SNAP-IN WIREWAY COVER.

277 VOLT ELECTRONIC BALLAST, SECURED WITH TWO CAPTIVE MOUNTING BOLTS.

TWO 32 WATTS, T-8 FLUORESCENT LAMPS.

FIXTURE TO BE SURFACE MOUNTED TO CEILING.

FIXTURE TYPE "D"
NOT TO SCALE

ALUMINUM DIE-CAST HOUSING WITH 24 COOLING FINS

STAINLESS STEEL SPRING TENSION BAND FOR EASY RELAMPING

RED LENS

100 WATTS SEALED BEAM

SINGLE FLASH HIGH INTENSITY STROBE

80 FLASH HIGH INTENSITY STROBE

FOR 120V. OPERATION

FIXTURE TYPE "E"
NOT TO SCALE

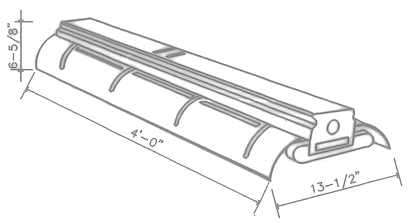

20 GAUGE STEEL CHANNEL FINISHED INSIDE AND OUT WITH WHITE ENAMEL.

20 GAUGE PORCELAIN ENAMELED STEEL, ONE PIECE REFLECTOR FINISHED INSIDE AND OUT IN WHITE PORCELAIN ENAMEL, APERTURED FOR 10% UPLIGHT.

277 VOLT ENERGY SAVING BALLAST, MOUNTED WITH TWO CAPTIVE BOLTS.

METAL ENCLOSED TURRET TYPE COMPRESSIBLE LAMP HOLDERS.
0
TWO, 34 WATT, T-12 FLUORESCENT LAMPS.

FIXTURE TYPE "F"
NOT TO SCALE

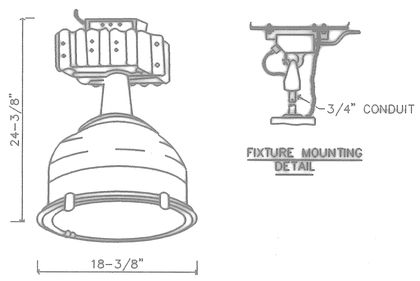

DIE CAST ALUMINUM BALLAST HOUSING. SPUN ALUMINUM REFLECTOR. HEAT DISSIPATING FINS.VENTILATION OPENING AT TOP OF REFLECTOR REQUIRED. PROVIDE INTERNAL GREEN GROUNDING SCREW.

CLEAR TEMPERED GLASS LENS IN GASKETED DOOR. HINGED AND HELD WITH STAINLESS STEEL LATCHES.

HIGH POWER FACTOR CONSTANT WATTAGE AUTO TRANSFORMER BALLAST FOR 277 VOLT OPERATION.

PROVIDE ALL EXPOSED METAL PARTS WITH ACRYLIC CORROSION RESISTANT FINISH.

U.L. LISTED FOR DAMP LOCATION USE.

SAFETY CHAIN TO STRUCTURE.

3/4" RIGID CONDUIT, THREADED BOTH ENDS.
LENGTH OF CONDUIT SHALL BE ADJUSTED TO LOCATE BOTTOM OF FIXTURE REFLECTOR AT 20'-0" AFF IN WET TRAINER ONLY.

CAST ALUMINUM HANGER-FEED BOX ASSEMBLY WITH HANGER HOOK, SPLICE BOX ATTACHMENT FEET, FLUSH 277V-2W.+GRD. RECEPTACLE AND THREADED CONDUIT CONNECTION HUBS.

DRILL BEAM AND ATTACH HANGER-FEED BOX WITH (4)-1/4"X4" MACH. SCREWS. PROVIDE LOCKWASHERS AND "NYLOC" NUTS.

PROVIDE HOOK WITH SAFETY SCREW.

ONE, 250 WATT, HIGH PRESSURE SODIUM LAMP.

PROVIDE LATCHES FOR EASY ATTACHMENT AND REMOVAL OF REFLECTOR WITH SAFETY CHAIN.

FIXTURE TYPE "G"
NOT TO SCALE

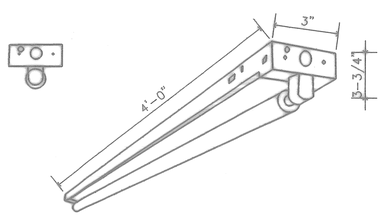

DIE FORMED AND CONSTRUCTED FROM 22 GAUGE COLD ROLLED STEEL BONDERIZED AGAINST CORROSION , RUST RESISTANT HIGH GLOSS BAKED ENAMEL.

ONE, 34WATT, F40, FLUORESCENT LAMP.

FIXTURE COMPLETE WITH 277 VOLT ENERGY -SAVING TYPE BALLAST. BALLAST AND LAMP TO BE COMPATIBLE.

FIXTURE TYPE "I"
NOT TO SCALE

EDDY K. ANG
20642
REGISTERED PROFESSIONAL ENGINEER OF ILLINOIS

ARCH. & ENGR. SEAL

FOR OFFICIAL USE ONLY

RECORD DRAWINGS
DATE 06/08/98

DATE 07-31-97 REMARKS AS-BUILT, NO CORRECTIONS BY _____ DESIGN IN ACCORDANCE

Kolatt Architects Engineers Planners, Inc.
549 West Randolph Street
Chicago, IL 60661
Established in 1949
A Lester B. Knight & Associates, Inc. Company
Copyright 1994 Kolatt Architects Engineers Planners, Inc.

DEPARTMENT OF THE NAVY — NAVAL FACILITIES ENGINEERING COMMAND
SOUTHERN DIVISION
CHARLESTON, S.C.

NAVAL TRAINING CENTER — GREAT LAKES, ILLINOIS

DSGN ANG DR JACQUEZ CHK SEABORG
SURV POPOVIC CH. ENGR
SUBMITTED BY — DATE 8-31-97
NAVY MANAGER TITLE
EC — SR ME
FPE — DR.
APPROVED — DATE
OFFICER IN CHARGE
APPROVED — DATE 9/12/94
STD FOR COMMAND NAVFAC

DAMAGE CONTROL SCHOOL

LIGHTING FIXTURE DETAILS

SIZE	CODE IDENT NO.	NAVFAC DRAWING NO.	DRAWING NO.
F	80091	5276647	E7-1
SCALE NONE		CONSTR CONTR NO. N62467-93-C-1143	
		SPEC 08-93-1143	SHEET 23 OF

Filename: P:\PAPER\JEPS2701 User: JJ Date&time: 08/25/94 08:45:55

P: TR-8CW PS Size=0.0
P: TR-40NGT PS Size=0.0
P: JEPS2701 PS Size=0.0

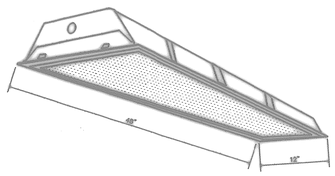

22 GAUGE, ONE PIECE, DIE-FORMED STEEL HOUSING AND END PLATES FINISHED WITH 89% REFLECTIVE, ELETROSTATICALLY APPLIED BAKED WHITE ALKYD ENAMEL FINISH OVER A PHOSPHATE PRIME COATING WITH RUST INHIBITOR

END PLATES ATTACHED TO HOUSING WITH A MINIMUM OF FOUR SCREWS.

HINGED FLAT ALUMINUM LENS DOOR WITH MITERED CORNERS DESIGNED TO FORM A MECHANICAL TIGHT SEAL, FINISHED TO MATCH HOUSING. DOOR TO BE SECURED WITH CAM LATCHES.

SNAP IN BALLAST COVER WITH 277 VOLT ELECTRONIC BALLAST SECURED WITH TWO CAPTIVE BOLTS.

MINIMUM 0.125 INCH THICK, 100%, VIRGIN ACRYLIC, PATTERN 12 PRISMATIC LENS.

PRESSURE LOCK LAMP HOLDERS TO PROVIDE A MINIMUM OF 5-1/4" HORIZONTAL LAMP SPACING.

TWO, 32-WATT, T-8, FLUORESCENT LAMPS.

FIXTURE TO BE SUITABLE FOR INSTALLATION IN AN INVERTED T-GRID CEILING.

U.L. LISTED FOR DAMP LOCATION USE.

FIXTURE TYPE "H"
NOT TO SCALE

STAINLESS STEEL SCREWS (4) FOR WALL MOUNTING.

MALLEABLE IRON WITH TRIPLE COAT, ZINC ELECTROPLATED, DICHROMATE AND ALUMINUM POLYMER ENAMEL.

ZINC ELECTROPLATED STEEL GUARD.

CLEAR GLASS HEAT RESISTANT SCREW IN GLOBE WITH NEOPRENE GASKET.

PORCELAIN SOCKET WITH STANDARD BASE.

ONE, 135 WATT, A-21 ENERGY SAVING INCANDESCENT LAMP. 120 VOLT OPERATION.

FIXTURE SHALL BE U.L. LISTED FOR WET LOCATIONS.

FIXTURE TYPE "J"
NOT TO SCALE

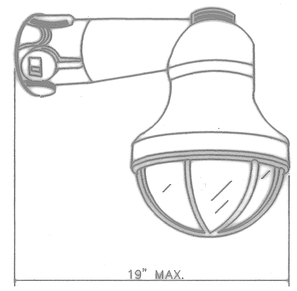

CAST CORROSION RESISTANT ALUMINUM HOUSING WITH LESS THAN 0.4% COPPER CONTENT.

HEAVY DUTY PORCELAIN LAMP SOCKET WITH NICKEL PLATED SCREW SHELL.

REMOVEABLE CAST ALUMINUM GLOBE GAURD.

HEAT AND IMPACT RESISTANT PRE-STRESSED GLASS GLOBE.

100 WATT, A-21, INCANDESCENT LAMP. 120 VOLT OPERATION.

FIXTURE HOUSING AND GUARD FINISHED WITH GRAY EPOXY PAINT.

FIXTURE U.L. 595 LISTED AS MARINE TYPE ELECTRIC LIGHTING FIXTURE.

WALL MOUNT FIXTURE 3'-6" ABOVE FLOOR.

FIXTURE TYPE "M"
NOT TO SCALE

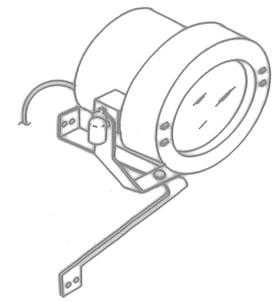

FIXTURE HOUSING, RING AND YOKE CONSTRUCTED OF CORROSION RESISTANT ALUMINUM WITH LESS THAN 0.4% COPPER CONTENT.

CLEAR, THERMAL SHOCK AND IMPACT RESISTANT GLASS LENS.

CLEAR SPECULAR ALUMINUM REFLECTOR.

FIXTURE AND BRACKETS TO HAVE GRAY BAKED ACRYLIC ENAMEL PAINT FINISH.

ALL EXTERNAL HARDWARE TO BE STAINLESS STEEL.

UNIT SUPPLIED WITH FACTORY SEALED 6 FEET LONG 3 CONDUCTOR POWER CABLE.

150 WATT, PAR 38, FLOOD INCANDESCENT LAMP. 120 VOLT OPERATION.

FIXTURE U.L. 595 LISTED AS MARINE TYPE ELECTRIC LIGHTING FIXTURE.

MOUNT CENTER LINE OF FIXTURE 2'-0" ABOVE FLOOR.

FIXTURE TYPE "N"
NOT TO SCALE

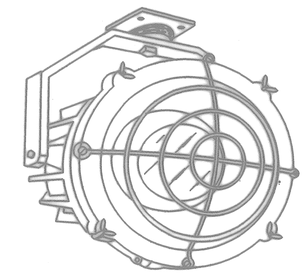

HOUSING, LENS DOOR AND BRACKET CONSTRUCTION OF. CORROSION RESISTANT ALUMINUM WITH LESS THAN 0.4% COPPER CONTENT.

IMPACT AND THERMAL SHOCK RESISTANT GLASS LENS.

REINFORCED PORCELAIN LAMP SOCKET AND FLOATING LAMP MOUNTING ASSEMBLY TO PREVENT LAMP SHOCK AND VIBRATION.

CAPTIVE DOOR RETAINING HARDWARE.

ALL EXTERNAL HARDWARE CONSTRUCTED OF STAINLESS STEEL.

STAINLESS STEEL LENS GUARD.

300 WATT, R-40, REFLECTOR FLOOD MOGUL SCREW BASE LAMP. 120 VOLT OPERATION.

GRAY BAKED ACRLIC ENAMEL PAINT FINISH.

FIXTURE U.L. 595 LISTED AS A MARINE TYPE ELECTRIC LIGHTING FIXTURE.

SURFACE MOUNT FIXTURE TO CEILING.

FIXTURE TYPE "P"
NOT TO SCALE

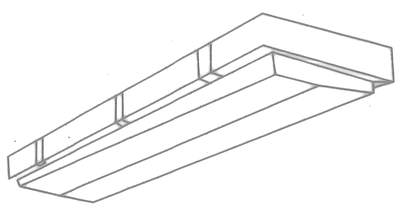

HOUSING CONSTRUCTED OF SELF-EXTINGUISHING FIBERGLASS REINFORCED POLYESTER WITH GRAY FINISH. ALL CONDUIT ENTRANCES TO BE THREADED HUBS.

MINIMUM 0.15" THICK HIGH IMPACT CLEAR LOW BRIGHTNESS PATTERN POLYCARBONATE LENS WITH CLOSED CELL CONTINUOUS NEOPRENE GASKETING.

LENS ATTACHED TO HOUSING WITH A MINIMUM OF SIX STAINLESS STEEL CAM LATCHES.

0° FAHRENHEIT, 277 VOLT ENERGY SAVING BALLAST, SECURED WITH TWO CATIVE MOUNTING BOLTS.

SPRING LOADED LAMP HOLDERS.

INTERNAL METAL LINER WITH BAKED WHITE ALKYD ENAMEL FINISH.

TWO, 34 WATT, T-12 FLUORESCENT LAMPS.

U.L. 1572 LISTED FOR WET LOCATION.

FIXTURE TO BE SURFACE MOUNTED TO CEILING UNLESS OTHERWISE NOTED.

FIXTURE TYPE "R"
NOT TO SCALE

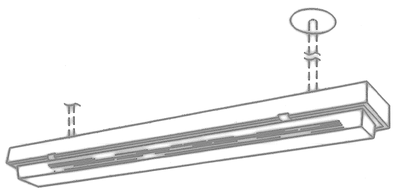

DIE FORMED .040" ALUMINUM HOUSING WITH BAKED WHITE ENAMEL FINISH EXTRUDED ALUMINUM LENS FRAME COMPLETELY GASKETED AND SECURED WITH POSITIVE ACTION LATCHES AND FULL LENGTH HINGE.

VACUUM FORMED ONE-PIECE EXTRUDED PRISMATIC HIGH IMPACT ACRYLIC LENS LOCKED FIRMLY IN EXTRUDED ALUMINUM FRAME.

U.L. LISTED FOR DAMP LOCATION.

ENERGY SAVING BALLAST SHALL BE COMPLETELY WIRED FOR 277V. OPERATION. BALLAST COMPARTMENT AND WIRING SHALL BE ACCESSIBLE WITHOUT TOOLS.

2- 32 WATTS, T-8 LAMPS

FIXTURE TYPE "Q"
NOT TO SCALE

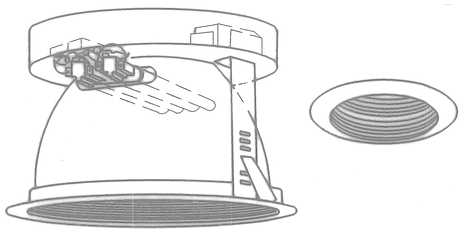

HOUSING--ALUMINUM WITH BAKED ENAMEL FINISH.

REFLECTOR SHALL BE A POLISHED ANODIZED ALUMINUM.

TRIM FLANGE SHALL BE MATTE WHITE RING.

MATTE BLACK EXTRUDED MULTIGROOVE BAFFLE.

FIXTURE SHALL BE SERVICEABLE FROM BELOW CEILING.

PROVIDE FIXTURE ASSEMBLY COMPLETE WITH ALL EQUIPMENT (PLASTER RINGS, HANGER BARS, ETC...).

TWO, 13 WATT COMPACT TWIN FLUORESCENT LAMPS.

TWO, HIGH POWER FACTOR PREHEAT BALLASTS FOR 277 VOLT OPERATION.

APERTURE APPROX. 9-3/4" OUTSIDE DIAMETER.

FIXTURE TYPE "U"
NOT TO SCALE

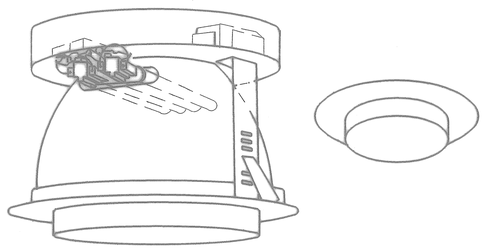

HOUSING--ALUMINUM WITH BAKED ENAMEL FINISH.

REFLECTOR SHALL BE A POLISHED ANODIZED ALUMINUM.

TRIM FLANGE SHALL BE MATTE WHITE RING (GASKETED).

DROP OPAL ACRYLIC SHATTER RESISTANT DIFFUSER.

FIXTURE SHALL BE SERVICEABLE FROM BELOW CEILING.

PROVIDE FIXTURE ASSEMBLY COMPLETE WITH ALL EQUIPMENT (PLASTER RINGS, HANGER BARS, ETC...).

TWO, 13 WATT COMPACT TWIN FLUORESCENT LAMPS.

TWO, HIGH POWER FACTOR PREHEAT BALLASTS FOR 277 VOLT OPERATION.

APERTURE APPROX. 8" OUTSIDE DIAMETER.

U.L. LISTED FOR DAMP LOCATION USE.

FIXTURE TYPE "V"
NOT TO SCALE

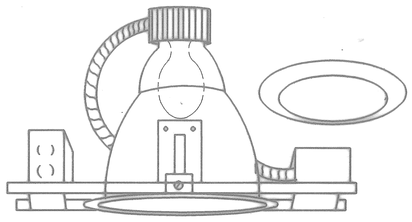

DIE-CAST ALUMINUM HOUSING

CLEAR SPECULAR REFLECTOR

9" APERTURE

MINIMUM OF 55° BEAM ANGLE

175 WATT METAL HALIDE LAMP

FLANGE TO MATCH REFLECTOR FINISH

277 VOLT HIGH POWER FACTOR BALLAST

FIXTURE TYPE "S" & "S1"
NOT TO SCALE

"S1" FIXTURE SIMILAR TO "S" TYPE, "S1"-100W. METAL HALIDE LAMP. 277 V. 0° HIGH POWER FACTOR BALLAST,FOR OUTSIDE LOCATION.

FOR OFFICIAL USE ONLY

RECORD DRAWING
DATE 06/08/98

DATE 07-31-97 AS-BUILT, NO CORRECTIONS BY: SIGN: B.H.

Knight Architects Engineers Planners, Inc.
549 West Randolph Street
Chicago, IL 60661
Established in 1945
A Sector of Sargent & Associates, Inc. Company
© Copyright 1997 Knight Architects Engineers Planners, Inc.

DEPARTMENT OF THE NAVY
SOUTHERN DIVISION
CHARLESTON, S.C.
NAVAL FACILITIES ENGINEERING COMMAND

DSGN ANC DR JACQUEZ CHK SEABORG
SUPV POPOVIC CH ENGR
SUBMITTED BY DATE
DIV MANAGER DATE 8/21/97
ENG BR HD
FPB DIR

NAVAL TRAINING CENTER GREAT LAKES, ILLINOIS

DAMAGE CONTROL SCHOOL

LIGHTING FIXTURE DETAILS

APPROVED DATE
OFFICER IN CHARGE
APPROVED DATE 9/12/97
FPB FOR COMMANDER NAVFAC

ARCH. & ENGR. SEAL

SIZE	CODE IDENT NO.	NAVFAC DRAWING NO.	DRAWING NO.
F	80091	5276648	E7-2
		CONSTR CONTR NO. N62467-93-C-1143	
SCALE NONE		SPEC 06-93-1143	SHEET 224 OF

R. TTL-BLUE PS Item=0,0			
R. TTL-INVERT PS Item=0,0			
P. JEPS2702 PS Item=0,0			

Datetime: 08/25/94 08:47:55 User: JJ Filename: P:\PAPER\JEPS2702

239

DIE CAST ALUMINUM MOUNTING FRAME

2 7/8" APERTURE WITH ALZAK CLEAR REFLECTOR

ADJUSTABLE LAMPHOLDER (AIMED 45° FROM VERTICAL AND ROTATABLE UP TO 358°.)

INTEGRAL THERMAL PROTECTION WITH LOW VOLTAGE TRANSFORMER.

75 WATT MR-16 LAMP, FOR 120 VOLT OPERATION.

FIXTURE TYPE "W"
NOT TO SCALE

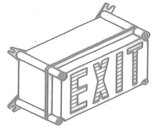

HEAVY GAUGE NEMA 4X MOLDED FIBERGLASS HOUSING WITH GRAY FINISH AND REMOVABLE MOUNTING FEET.

CLEAR GASKETED UV STABILIZED POLYCARBONATE COVER.

TWO 12 WATT CANDELABRA BAWE AC LAMPS (NORMAL MODE) TWO 3 WATT 6 VOLT DC WEDGE BASE LAMPS (EMERGENCY MODE). FOR 277 VOLT OPERATION.

UNIFORMLY ILLUMINATED WHITE POLYCARBONATE FACE WITH RED LETTERS.

SEALED NICKEL CADMIUM BATTERY CAPABLE OF A MINIMUM OF 90 MINUTES CONTINUOUS SERVICE IN EMERGENCY MODE.

SOLID STATE CONSTANT CURRENT CHARGER WITH FAST RESPONSE SEAL TRANSFER RELAY.

SEALED PUSH TO TEST SWITCH AND POWER ON INDICATING LIGHT

U.L. 1572 LISTED SUITABLE FOR WET LOCATION

WALL MOUNT FIXTURE OVER DOOR UNLESS OTHERWISE NOTED.

FIXTURE TYPE "Y"
NOT TO SCALE

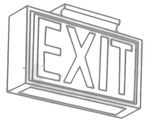

EXTRUDED, ANODIZED ALUMINUM FRAME WITH MITERED CORNERS SUITABLE FOR UNIVERSAL MOUNTING, WITH DOWNLIGHT OPENING.

SINGLE OR DOUBLE ALUMINUM STENCIL FACE AS INDICATED ON PLAN WITH RED GLASS BACKPLATE, AND UNIVERSAL DIRECTION ARROWS.

ONE 7 WATT, PL COMPACT FLUORESCENT LAMP, WITH 277 VOLT BALLAST. PROVIDE 3 WATT LAMP FOR D.C. OPERATION.

FRAME, BACK, AND FACE PLATE FINISHED WITH BAKED WHITE ENAMEL.

SEALED NICKEL CADMIUM BATTERY CAPABLE OF A MINIMUM OF 90 MINUTES CONTINUOUS SERVICE IN EMERGENCY MODE.

EXTERNALLY MOUNTED TEST SWITCH.

CONSTANT CURRENT CHARGER WITH FAST RESPONSE TRANSFER RELAY.

FIXTURE TYPE "Y1"
NOT TO SCALE

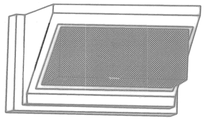

ONE PIECE, NOMINAL 0.156" THICK DIECAST ALUMINUM ALLOY HOUSING, SEALED AND GASKETED.

REFRACTOR-BOROSILICATE PRISMATIC GLASS, PROVIDE ALUMINUM REFLECTOR.

WEATHERTIGHT EXTRUDED NEOPRENE GASKET.

HIGH POWER FACTOR CORE AND COIL TYPE 277 VOLT .-20°F BALLAST MOUNTED DIRECTLY TO ALUMINUM HOUSING FOR HEAT DISSIPATION.

HEAVY DUTY PORCELAIN, NICKEL PLATED SCREW SHELL, MOGUL BASE LAMP SOCKET.

TYPE "Z1" ONE, 100 WATT HIGH PRESSURE SODIUM LAMP.
TYPE "Z2" ONE, 70 WATT HIGH PRESSURE SODIUM LAMP.

CORROSION RESISTANT BRONZE PAINT FINISH.

LAMP SOCKET SHALL BE ADJUSTABLE.

FIXTURE U.L. 1572 LISTED FOR WET LOCATIONS.

FIXTURE TYPE "Z1"&"Z2"
NOT TO SCALE

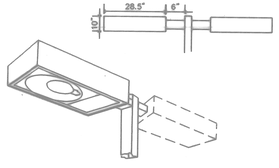

ONE PIECE FORMED ALUMINUM HOUSING WITH ALL WELDS & FASTENERS CONCEALED ALL EXPOSED PARTS OF LUMINAIRE HOUSING AND SUPPORT ARM SHALL BE PROVIDED WITH ANODIZED STATUARY BRONZE FINISH.

LENS FRAME SHALL BE FABRICATED FROM EXTRUDED ALUMINUM & FITTING WITH MITERED CORNERS, LENS SHALL BE RETAINED IN THE EXTRUSION GROOVE & SEALED IN PLACE WITH AN EXTRUDED SILICONE RUBBER GASKET LENS SHALL BE EQUIPPED WITH CONCEALED STAINLESS STEEL LATCHES & HINGE PINS THE ENTIRE LUMINAIRE ASSEMBLY WITH LENS FRAME LENS IN PLACE SHALL BE RAIN-TIGHT, DUST-TIGHT & CORROSION RESISTANT.

LENS SHALL BE MANUFACTURED FROM OPTICALLY CLEAR, HEAT & IMPACT RESISTANT TEMPERED FLAT GLASS,

THE REFLECTOR/OPTICAL SYSTEM SHALL BE MANUFACTURED FROM SPECULAR,ANODIZED ALUMINUM. SEGMENTED REFLECTORS SHALL BE SET FACETED ARC IMAGE DUPLICATOR PATTERNS TO ACHIEVE PATTERNS INDICATED ON DRAWINGS.

REFLECTORS ASSEMBLY SHALL BE FURNISHED WITH QUICK DISCONNECTS. LAMP HOLDERS SHALL BE ATTACHED TO THE REFLECTORS ASSEMBLY.

277 V. HPS BALLAST/CAPACITOR ASSEMBLY. BALLAST SHALL BE MEDIUM REGULATION AUTO TRANSFORMER TYPE PROVIDING 10% VARIATION FROM RATED INPUT VOLTAGE. INSULATION ON WIRING WITHIN THE LUMINAIRE ASSEMBLY SHALL BE RATED FOR 150°.

ONE PIECE EXTRUDED ALUMINUM SUPPORT ARM.

400 W. HPS LAMP HORIZONTALLY MOUNTED.

24' ALUMINUM POLE, SEE DETAIL 9/E8-(E7)-3

FIXTURE TYPE "ZA"
NOT TO SCALE

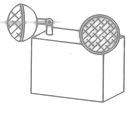

FOR 90 MINUTES CONTINUOUS ILLUMINATION AT 87.5% OF NORMAL VOLTAGE.

BATTERY TO BE NICKEL-CADMIUM POCKET PLATE TYPE, 6 VOLT, MAINTENANCE FREE, FOR 277 VOLT OPERATION.

BATTERY CHARGER TO BE SOLID STATE TYPE FOR CONTINUOUS, VARIABLE, CURRENT LIMITED, FILTERED AND REGULATED CHARGE RATE.

PUSH TO TEST SWITCH AND METER TO INDICATE BATTERY VOLTAGE WITH MOUNTING BRACKET FINISH TO BE WHITE UL924 CONFORMANCE.

28 WATT HALOGEN LAMPS.

WALL MOUNTED FIXTURE 8'-0" ABOVE FLOOR U.O.N.

FIXTURE "K"
NOT TO SCALE

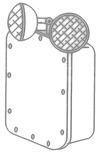

HEAVY GAUGE NEMA 4X MOLDED FIBERGLASS HOUSING WITH ANSI 61 GREY FINISH

FULLY GASKETTED COVER ATTACHED WITH A MINIMUM OF 9 STAINLESS STEEL SCREWS

INTEGRAL MOUNTING FLANGES AT TOP AND BOTTOM OF HOUSING

12 VOLT SEALED MAINTENANCE FREE NICKEL CADMIUM BATTERIES MOUNTED IN A SEPARATE COMPARTMENT WITHIN HOUSING.

SOLID STATE, CURRENT LIMITED, TEMPERATURE COMPENSATED CHARGING SYSTEM WITH FUSED OUTPUT CIRCUIT CAPABLE OF FULL RECHARGE IN COMPLIANCE WITH U.L. SPECIFICATIONS.

UNIT SUPPLIED WITH EXTERNAL TEST SWITCH AND POWER ON INDICATING LIGHT.

TWO TOP MOUNTED WEATHERPROOF ADJUSTABLE LIGHTING HEADS CONSTRUCTED OF HIGH IMPACT RESISTANT POLYCARBONATE WITH 9 WATT HIGH INTENSITY TUNGSTEN LAMPS.

UNIT DUAL RATED FOR 120 OR 277 VOLT INPUT.

WALL MOUNTED FIXTURE 8'-0" ABOVE FLOOR U.O.N.

FIXTURE TYPE "K1"
NOT TO SCALE

HOUSING AND GUARD SHALL BE CAST ALUMINUM WITH STD. CHEMICAL PRODUCT PROTECTIVE FINISH.

PROVIDE FIXTURE COMPLETE WITH HANGERS AND ANY 1-200 WATTS, A21 INCANDESCENT LAMPS. 120 VOLT OPERATION.

PROVIDE ANY ADDITIONAL EQUIPMENT REQUIRED FOR COMPLETE INSTALLATION.

FIXTURE TYPE "L"
NOT TO SCALE

Date&time: 08/25/94 08:54:34 User: JJ Filename: P:\PAPER\JEFS2703

FOR OFFICIAL USE ONLY

RECORD DRAWING
DATE 06/08/98

** date 07-31-97 : date AS-BUILT, NO CORRECTIONS BY _____ date 6/8/98

DEPARTMENT OF THE NAVY — NAVAL FACILITIES ENGINEERING COMMAND
SOUTHERN DIVISION
CHARLESTON, S.C.

NAVAL TRAINING CENTER — GREAT LAKES, ILLINOIS

DAMAGE CONTROL SCHOOL

LIGHTING FIXTURE DETAILS

ARCH. & ENGR. SEAL

SIZE	CODE IDENT NO.	DRAWING NO.	REVISION
F	80091	5276649	E7-3

CONTR CODE NO. N62467-93-C-1143

SCALE NONE — SPEC 08-93-1143 — SHEET 23 OF

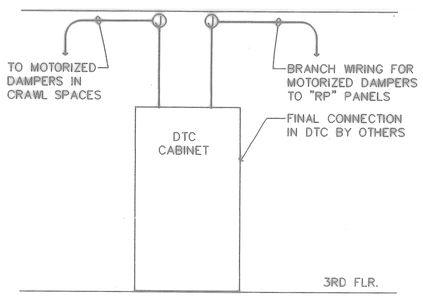

11 DTC CABINET WIRING DETAIL
E4-3 E8-1 SCALE: N.T.S.

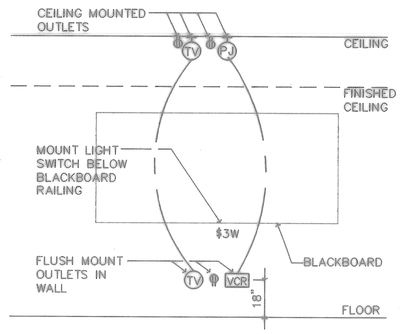

10 CLASSROOM DETAIL
E4-6 E8-1 SCALE: N.T.S.

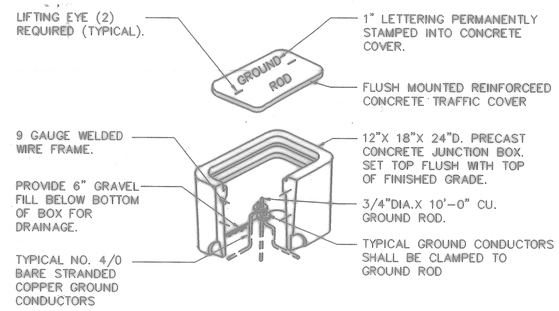

4 GROUND ROD JUNCTION BOX DETAIL
E4-1, E4-5 E8-1 SCALE: N.T.S

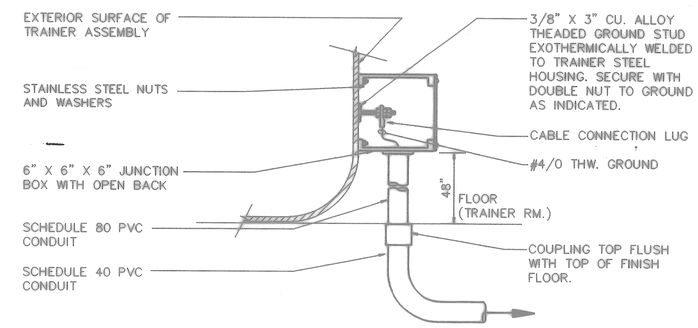

1 DETAIL- GROUNDING CONNECTION TO TRAINER
E4-5 E8-1 SCALE: N.T.S.

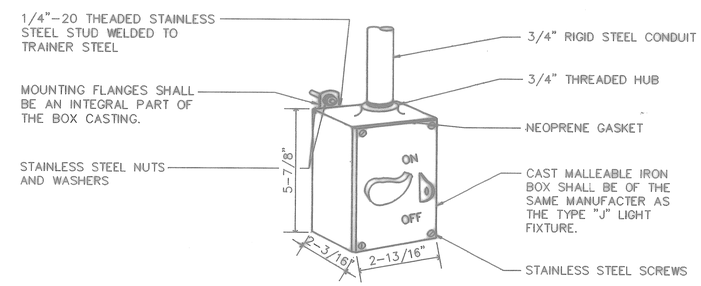

2 TRAINER LIGHT SWITCH DETAIL
E3-5, E3-6 E8-1 SCALE: N.T.S.

NOTE; PROVIDE FOR 1/4" MIN. STAND OFF FOM WALL.

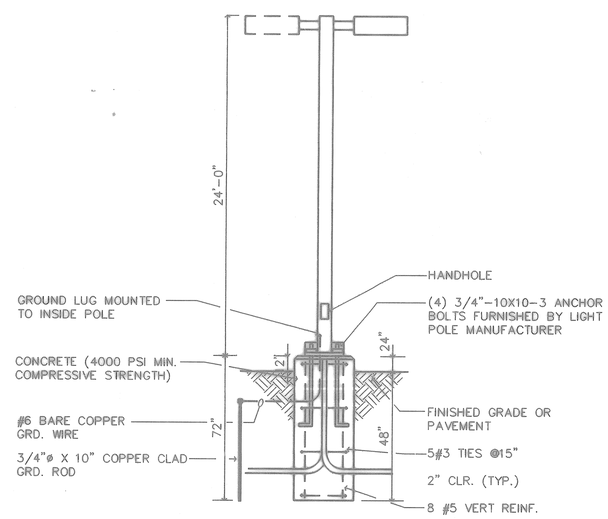

9 LIGHT POLE AND FOUNDATION DETAIL
E7-3 E8-1 SCALE: N.T.S.

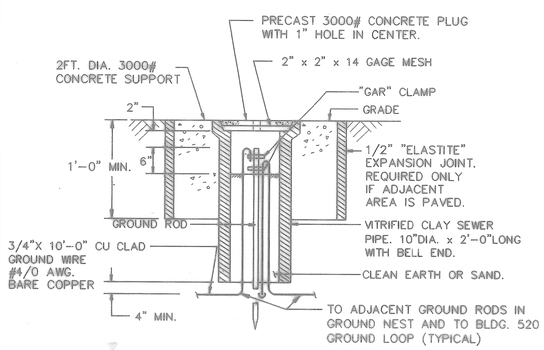

8 GROUNDWELL DETAIL
E8-1 SCALE: N.T.S.

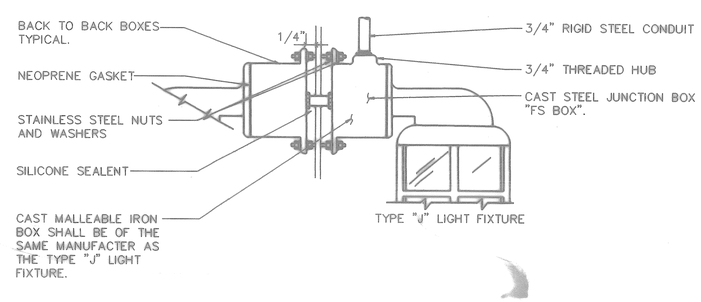

3 SURFACE BOX MOUNTING DETAIL
E3-5, E3-6 E8-1 SCALE: N.T.S.

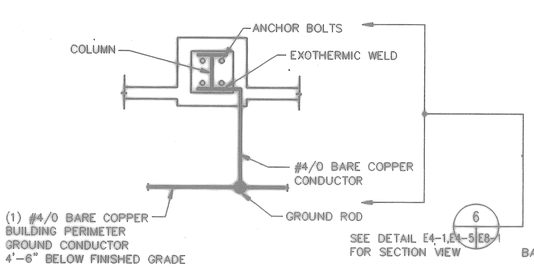

7 PERIMETER COLUMN GROUNDING DETAIL
E8-1 E8-1 SCALE: N.T.S.

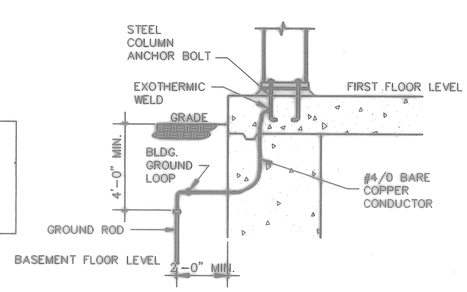

6 PERIMETER COLUMN GROUNDING DETAIL
E8-1 E8-1 SCALE: N.T.S.

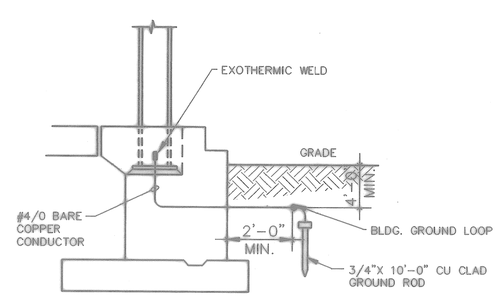

5 COLUMN GROUNDING DETAIL
E8-1 E8-1 SCALE: N.T.S.

FOR OFFICIAL USE ONLY

RECORD DRAWING
DATE 06/08/98

DATE 07-31-97 CHECK AS-BUILT, NO CORRECTIONS BY _____ DATE 10.11.00

Kolatis Architects Engineers Planners, Inc.
549 West Randolph Street
Chicago, IL 60661
Established in 1945
A Joint Venture of Kolatis & Associates, Inc. Company
and Kolatis, Kolatis Architects Engineers Planners, Inc.

DEPARTMENT OF THE NAVY
NAVAL FACILITIES ENGINEERING COMMAND
SOUTHERN DIVISION
CHARLESTON, S.C.

DSGN ANG DR JACQUEZ CKD SEABORG
SURV POPOVIC CH ENGR
SUBMITTED BY DATE
FOR MEMBER FIRM
EIC BR HD
FPC DIR

NAVAL TRAINING CENTER GREAT LAKES, ILLINOIS

DAMAGE CONTROL SCHOOL

DETAILS

EDDY K. ANG
STATE OF ILLINOIS
REGISTERED PROFESSIONAL ENGINEER OF ILLINOIS

ARCH. & ENGR. SEAL

APPROVED DATE
OFFICER IN CHARGE
APPROVED DATE
FPO FOR COMMANDER, NAVFAC 8/12/94

SIZE	CODE IDENT NO.	NAVFAC DRAWING NO.	DRAWING NO.
F	80091	5276650	E8-1
		CONSTR CONTR NO. N62467-93-C-1143	
SCALE NONE		SPEC 06-93-1143	SHEET 236 OF

Filename: P:\PAPER\JEPS2801
User: JJ
Date&Time: 08/21/94 12:03:14
P: TIL-BLACK PS Scale=0.0
P: TIL-GREY PS Scale=0.0
P: JEPS2801 PS Scale=0.0

236

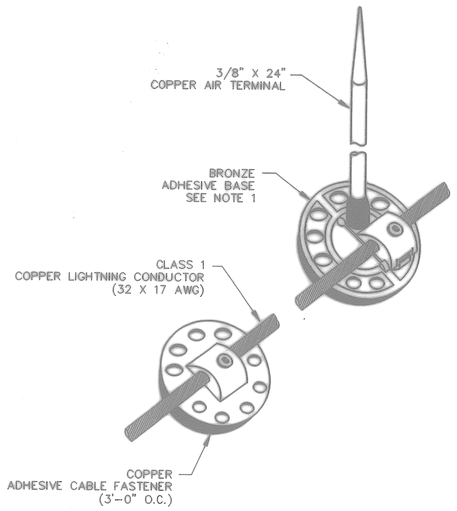

1 / E8-2 AIR TERMINAL TYPE

SCALE: N.T.S.

CONCEALED FLAT SURFACE ADHESIVE BASE WITH RISER BAR AND REQUIRE ACCESSORIES SHALL BE USED.

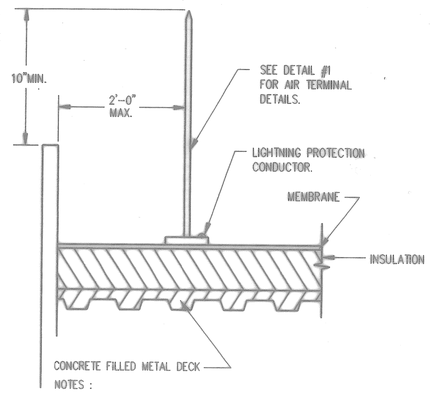

NOTES :

1. COORDINATE LIGHTNING PROTECTION SYSTEM INSTALLATION WITH ROOFING INSTALLER.
2. CONCEAL LIGHTNING PROTECTION CONDUCTORS IN INSULATION AS SHOWN.

3 / E8-2 AIR TERMINAL INSTALLATION ON CONVENTIONAL ROOF SYSTEM

SCALE: N.T.S.

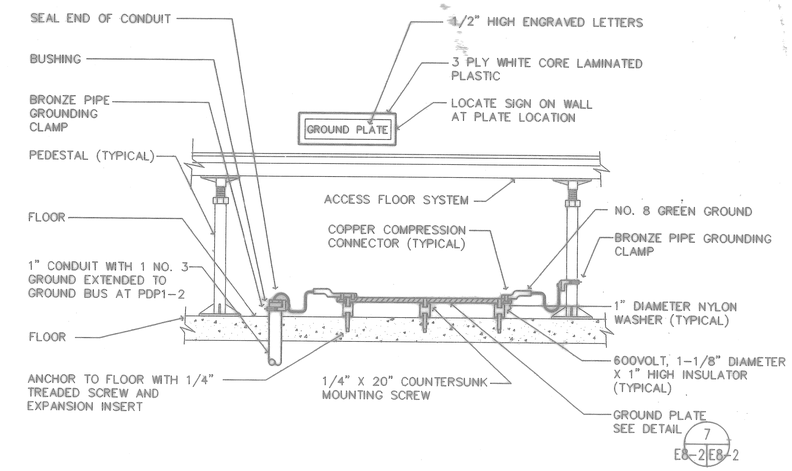

6 / E8-2 DETAIL - ACCESS FLOOR GROUNDING

SCALE: N.T.S.

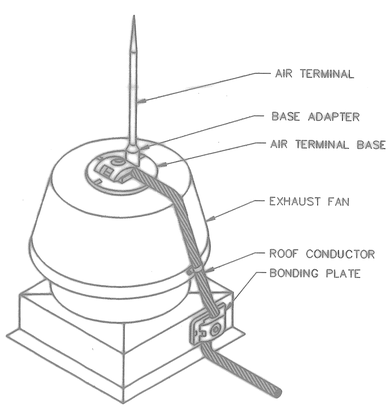

2 / E8-2 AIR TERMINAL AT EXHAUST FAN DETAIL

SCALE: N.T.S.

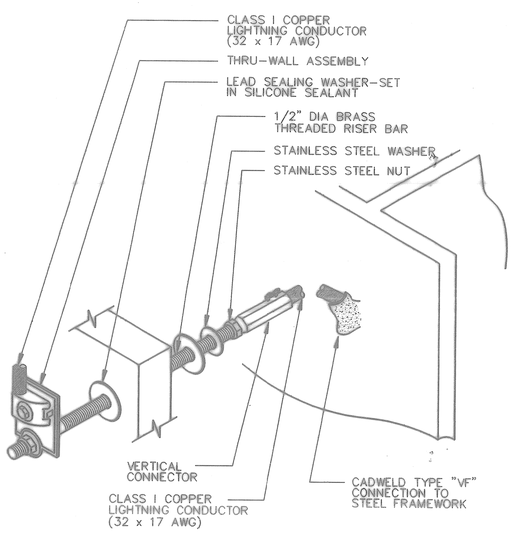

4 / E8-2 THRU-WALL TYPE

SCALE: N.T.S.

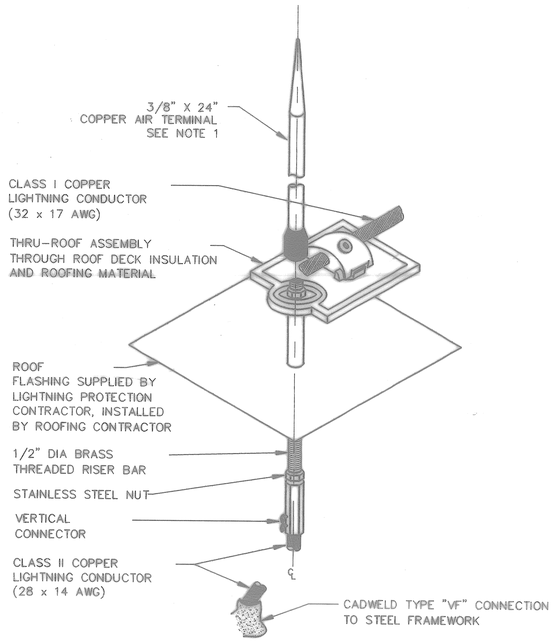

5 / E8-2 THRU-ROOF DETAIL

NOTE: N.T.S.

1. THE THRU ROOF ASSEMBLY SHALL BE MODIFIED AS REQUIRED TO INSTALL A COPPER AIR TERMINAL ON THE THREADED RISER BAR.
2. THE RISER TUBE OF THE ROOF FLASHING SHALL BE OF PROPER HEIGHT TO MATCH ROOF THICKNESS FOR CORRECT ROOF PENETRATION.

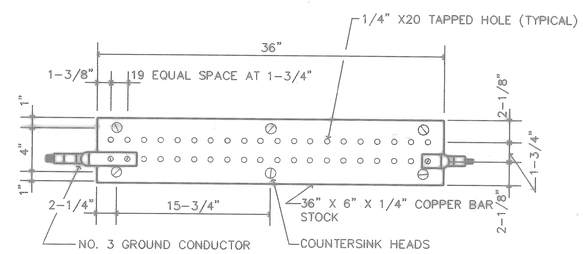

7 / E8-2 DETAIL - GROUNDING PLATE

SCALE: N.T.S.

A	TIL-0506	PS	Item:00
A	TIL-0507	PS	Item:00
A	JEPS2602	PS	Item:00

Date&time: 06/21/94 12:05:53 User: JJ Filename: P:\PAPER\JEPS2602

FOR OFFICIAL USE ONLY

REDLINE DRAWING
DATE 06/08/98

DATE 07-31-97 DESC AS-BUILT, NO CORRECTIONS BY INITIAL

Ralph Architects Engineers Planners, Inc.
549 West Randolph Street
Chicago, IL 60661
Established in 1949
A Leader in Design & Associates, Inc. Company
©Copyright 1997 Ralph Architects Engineers Planners, Inc.

DEPARTMENT OF THE NAVY — NAVAL FACILITIES ENGINEERING COMMAND
SOUTHERN DIVISION
CHARLESTON, S.C.

NAVAL TRAINING CENTER — GREAT LAKES, ILLINOIS

DSGN ANG DR JACQUEZ CHK SEABORG
SUPV POPOVIC CH ENGR
SUBMITTED BY DATE
FOR NAVFAC USE DATE
EIC DR HD
FPE DR

EDDY K. ANG 39062 REGISTERED PROFESSIONAL ENGINEER OF ILLINOIS

ARCH. & ENGR. SEAL

APPROVED DATE
OFFICER IN CHARGE
APPROVED DATE
RED FOR COMMENT NAVFAC 9/18/94

DAMAGE CONTROL SCHOOL

DETAILS

SIZE	CODE IDENT NO.	NAVFAC DRAWING NO.	DRAWING NO.
F	80091	5276651	E8-2

CONSTR CONTR NO. N62467-93-C-1143

SCALE NONE — SPEC 08-93-1143 — SHEET 2 OF 7

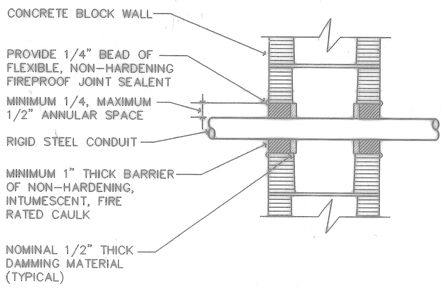

8 CONCRETE BLOCK WALL
E0-2 E8-3 SCALE: N.T.S.

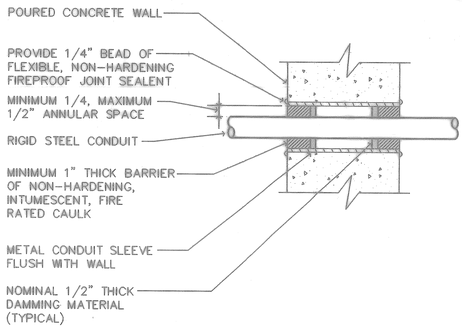

7 POURED CONCRETE WALL
E0-2 E8-3 SCALE: N.T.S.

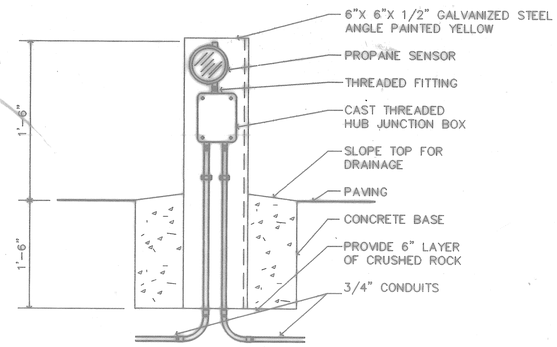

4 DETAIL - PROPANE LEAKAGE SENSOR
U1-1 E8-3 SCALE: N.T.S.

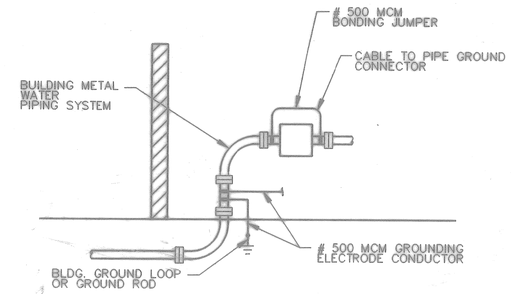

1 METAL WATER PIPING SYSTEM GROUNDING DETAIL
E8-3 SCALE: N.T.S.

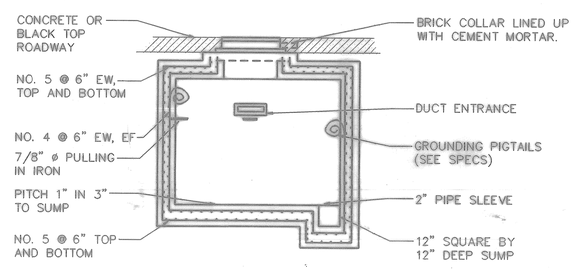

5 SECTION THRU MANHOLE
E8-3 SCALE: N.T.S.
NOTE: 8'-0" WIDE X 6'-0" DEEP X 6'-6" HIGH

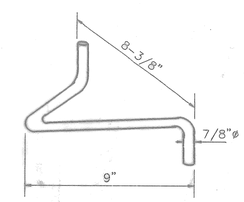

2 DETAIL OF PULLING-IN IRON
E8-3 SCALE: N.T.S.

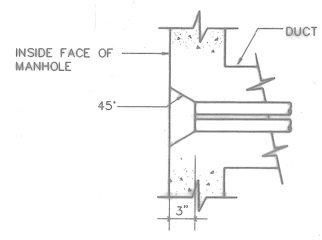

3 TYPICAL DUCT ENTRANCE
E8-3 SCALE: N.T.S.

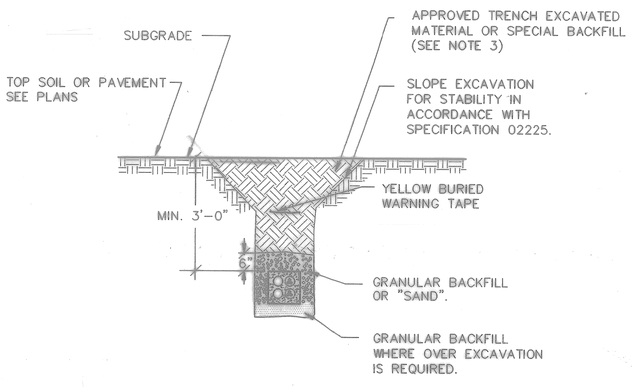

NOTES:

1. TRENCH WIDTH SHALL BE DETERMINED BY NUMBER OF CABLES AND SIDE WALL COMPACTION.
2. WORK WITH EARTHWORK SPECIFICATION 02225.
3. SPECIAL BACKFILL UNDER OR WITHIN 2' OF ROADS, STRUCTURES, AND PAVED AREA LINES SHALL BE CRUSHED STONE (CA-6) PLACED IN 6" MAX. LIFTS AND COMPACTED AS SPECIFIED.

6 TYPICAL DUCTBANK TRENCH SECTION DETAIL
E2-1 E8-3 SCALE: N.T.S.

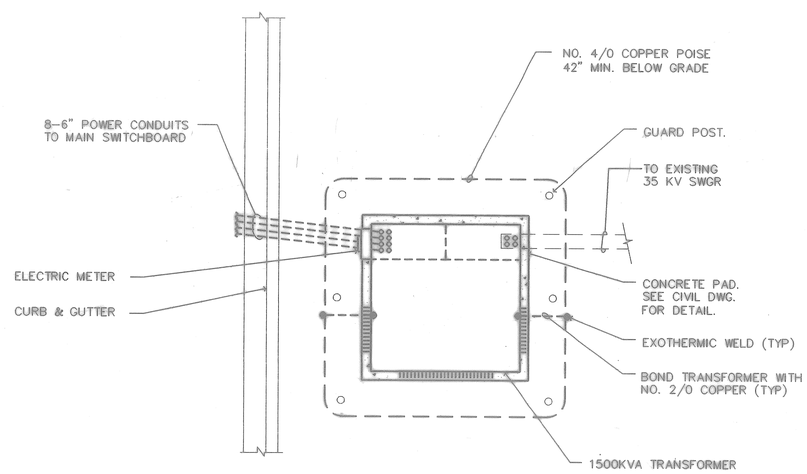

SCALE: NOT TO SCALE

6 SITE PLAN - TRANSFORMER
E8-3 SCALE: N.T.S.

EDDY K. ANG
3984
REGISTERED PROFESSIONAL ENGINEER OF ILLINOIS
ARCH. & ENGR. SEAL

FOR OFFICIAL USE ONLY

RECORD DRAWING
DATE: 06/08/98

** DATE 07-31-97 ERRATA AS-BUILT, NO CORRECTIONS BY _____ INITIAL N.A.

Krueck Architects Engineers Planners, Inc.
549 West Randolph Street
Chicago, IL 60661
Established in 1948
A Lester B. Knight & Associates, Inc. Company
©Copyright 1993 Krueck Architects Engineers Planners, Inc.

DEPARTMENT OF THE NAVY
NAVAL FACILITIES ENGINEERING COMMAND
SOUTHERN DIVISION
CHARLESTON, S.C.

DSGN ANG DR JACQUEZ CK SEABORG
SUPV POPOVIC CH ENGR
SUBMITTED BY DATE
DIV. MANAGER DATE
DC DR HD
FPE DIR

NAVAL TRAINING CENTER GREAT LAKES, ILLINOIS
DAMAGE CONTROL SCHOOL
DETAILS

APPROVED DATE
OFFICER IN CHARGE
APPROVED DATE
RED FOR COMMANDER NAVFAC 9/12/94

SIZE	CODE IDENT NO.	NAVFAC DRAWING NO.	DRAWING NO.
F	80091	5276652	E8-3
SCALE NONE		CONSTR CONTR NO. N6-487-93-C-1143	SHEET 238 OF 238
		SPEC 08-93-1143	

User: JJ Filename: P:\PAPER\JEPS2803
Date&Time: 08/21/94 12:07:26
P: TTL-BLDG PS Scale=0.0
P: TTL-CONST PS Scale=0.0
P: JEPS2803 PS Scale=0.0