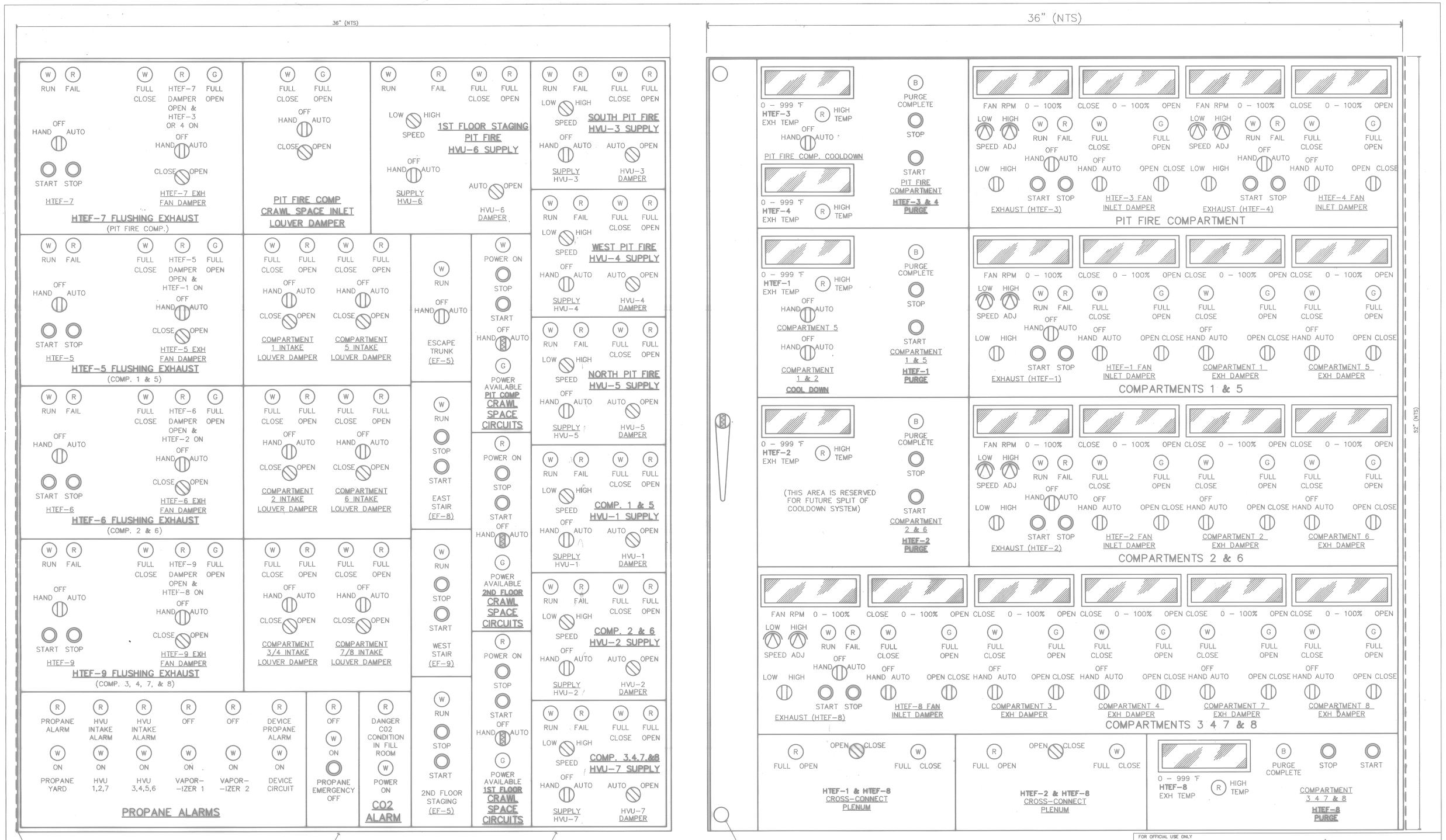

NOTE:

1. THE GOVERNMENT SHALL BLANK OFF ALL UNUSED DEVICES ON THIS DATA TERMINAL CABINET

AFFECTS ENTIRE SHEET

ARCH. & ENGR. SEAL

FOR OFFICIAL USE ONLY

RECORD DRAWING
DATE 06/08/98

DATE 07-31-97 ISSUE CORRECTED TO AS-BUILT BY MEB INITIAL

Knight Architects Engineers Planners, Inc.
549 West Randolph Street
Chicago, IL 60661
Established in 1949
A Leslie N. Knight & Associates, Inc. Company
© Copyright 1997 Knight Architects Engineers Planners, Inc.

DEPARTMENT OF THE NAVY
NAVAL FACILITIES ENGINEERING COMMAND
SOUTHERN DIVISION
CHARLESTON, S.C.

NAVAL TRAINING CENTER GREAT LAKES, ILLINOIS

DSGN KOWALIK KSIAZEK CHK RAUCH
SUPV RAUCH CH. ENGR.
SUBMITTED BY DATE
FIRM MEMBER TITLE
EIC BR HD
FPE DIR
APPROVED DATE
OFFICER IN CHARGE
APPROVED DATE
EFD FOR COMMANDER, NAVFAC

DAMAGE CONTROL SCHOOL
FFT FACEPLATE DETAIL FOR DATA TERMINAL CABINET

SIZE	CODE IDENT NO.	NAVFAC DRAWING NO.	DRAWING NO.
F	80091	5276572	M4-2
		CONSTR CONTR NO. N62467-93-C-1143	
SCALE 6"=1'-0"		SPEC 06-93-1143	SHEET 158 OF

Date&time: 10/31/97 08:49:37 User: TWhite Filename: P:\PAPER\CHANGED\MEB\JHPS2402

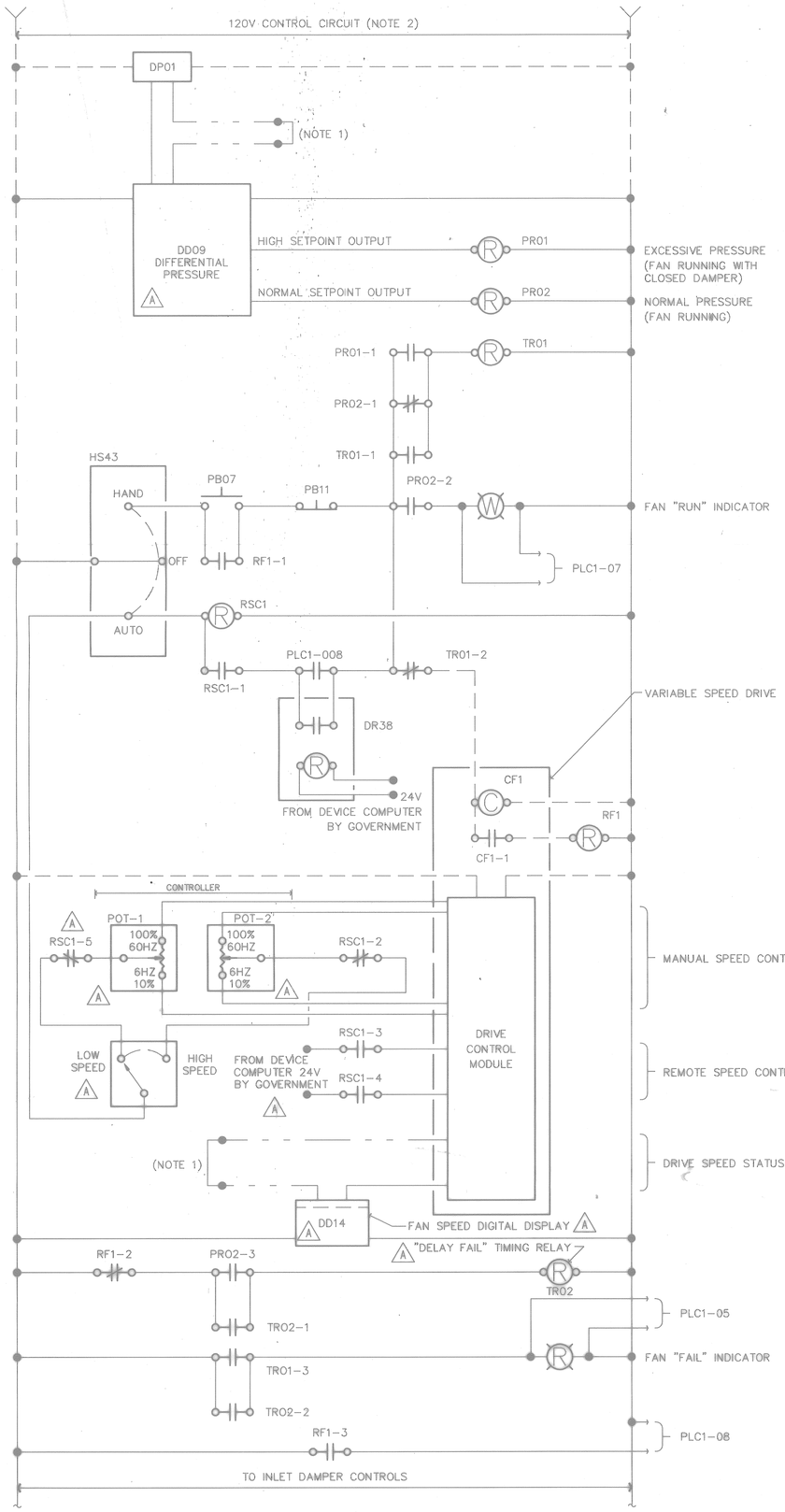

EXHAUST FAN HTEF-1 WIRING

SCALE: NONE (TYP. FOR HTEF-1,2,3,4,8)

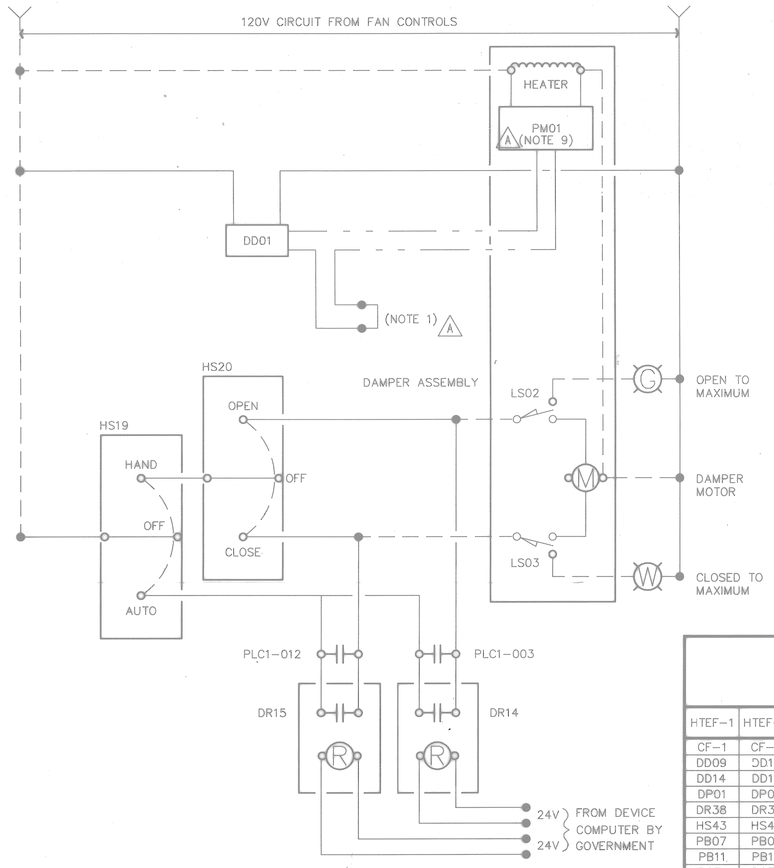

NOTE: HTEF-1 DAMPER SHOWN. FOR RESPECTIVE POWER SUPPLY CIRCUITS SEE ELECTRICAL PLANS.

LARGE FAN INLET DAMPER CONTROL WIRING

SCALE: NONE (TYP. FOR HTEF-1,2,3,4,8)

GENERAL NOTES:

1. PROVIDE TEMPORARY JUMPER TO MAINTAIN CONTINUITY OF SERIES DIGITAL LOOP.
2. RESPECTIVE POWER CIRCUITS TO BE PROVIDED BY DIVISION 16.
3. CONTACTOR AND AUXILIARY CONTACT SHALL BE PROVIDED AS INTEGRAL PART OF VARIABLE SPEED DRIVE CONTROLLER.
4. REFER TO SPECIFICATION 15972 FOR DESCRIPTION OF MOTORIZED DAMPER. DAMPERS MUST GO FROM FULLY CLOSED TO FULLY OPEN IN 15 SECONDS.
5. AUTOMATIC MODE SHALL BE CONTROLLED BY PROGRAMMABLE LOGIC CONTROLLER. DEMONSTATE THAT MANUAL MODE WORKS.
6. LS02 AND LS03 ARE TYPICAL DESIGNATIONS FOR LIMIT SWITCHES TO BE PROVIDED INTEGRAL WITH DAMPER MOTOR ASSEMBLY.
7. 120 VOLT, 4-20 MA POSITION TRANSMITTER SHALL BE PROVIDED INTEGRAL WITH DAMPER MOTOR ASSEMBLY.
8. THE CONTRACTOR SHALL START-UP AND OPERATE EACH PIECE OF EQUIPMENT AND SYSTEM PRIOR TO FINAL ACCEPTANCE BY THE GOVERNMENT.
9. DAMPER CONTROL IS TWO-POSITION; HOWEVER, THE POSITION INDICATOR IS USED TO PROVIDE FEEDBACK TO THE DTC FOR ACTUAL POSITION.

COMPONENT SCHEDULE
EXHAUST FANS HTEF-1,2,3,4,8

HTEF-1	HTEF-2	HTEF-3	HTEF-4	HTEF-8	ITEM TYPE	DESCRIPTION/FUNCTION	NOTES
CF-1	CF-2	CF-3	CF-4	CF-8	–	VARIABLE SPEED DRIVE CONTACTOR	3
DD09	DD10	DD11	DD12	DD13	P1	DIGITAL DISPLAY, FAN SPEED	–
DD14	DD15	DD16	DD17	DD18	D2	DIGITAL DISPLAY, DIFF. PRESSURE	–
DP01	DP02	DP03	DP04	DP09	P1	DIFF. PRESSURE SWITCH, FAN	–
DR38	DR39	DR40	DR41	DR46	R2	RELAY, DEVICE START	–
HS43	HS44	HS45	HS46	HS47	S3	AUTO/MANUAL SELECTOR SWITCH	–
PB07	PB08	PB09	PB10	PB23	S1	MANUAL START PUSHBUTTON	–
PB11	PB12	PB13	PB14	PB24	S2	MANUAL STOP PUSHBUTTON	–
POT1	POT2	POT3	POT4	POT5	C1	POTENTIOMETER, FAN RPM	–
PR01	PR03	PR05	PR07	PR17	R1	PRESSURE RELAY, HIGH PRESSURE	–
PR02	PR04	PR06	PR08	PR18	R1	PRESSURE RELAY, NORMAL PRESSURE	–
RF1	RF2	RF3	RF4	RF8	R3	RELAY, FAN RUN STATUS	–
RSC1	RSC2	RSC3	RSC4	RSC8	R1	RELAY, AUTO/MANUAL SPEED CONTROL	–
TR01	TR03	TR05	TR07	TR017	R4	TIMING RELAY, DELAY "OFF"	–
TR02	TR04	TR06	TR08	TR018	R4	TIMING RELAY, DELAY "FAIL"	–

COMPONENT SCHEDULE
INLET AND COMPARTMENT DAMPERS AT FANS HTEF-1,2,3,4,8

HTEF-1	HTEF-2	HTEF-3	HTEF-4	COMP1	COMP2	COMP3	COMP4	COMP5	COMP6	COMP7	COMP8	HTEF-8	ITEM TYPE	DESCRIPTION/FUNCTION	NOTES
–	–	–	–	–	–	–	–	–	–	–	–	–	–	MOTORIZED DAMPER ASSEMBLY	4
DD01	DD02	DD03	DD04	DD05	DD06	DD07	DD08	DD09	DD10	DD11	DD12	DD13	D3	DIGITAL DISPLAY, DAMPER STATUS	–
DR14	DR16	DR18	DR20	DR22	DR24	DR26	DR28	DR30	DR32	DR34	DR36	DR43	R2	RELAY, DEVICE OPEN	–
DR15	DR17	DR19	DR21	DR23	DR25	DR27	DR29	DR31	DR33	DR35	DR37	DR44	R2	RELAY, DEVICE CLOSE	–
HS19	HS21	HS23	HS25	HS27	HS29	HS31	HS33	HS35	HS37	HS39	HS41	HS48	S3	AUTO/MANUAL SELECTOR SWITCH	5
HS20	HS22	HS24	HS26	HS28	HS30	HS32	HS34	HS36	HS38	HS40	HS42	HS49	S4	MANUAL OPEN/CLOSE CONTROL	–
LS02	LS02	LS02	LS02	LS02	LS02	LS02	LS02	LS02	LS02	LS02	LS02	LS02	–	FULL OPEN LIMIT SWITCH	6
LS03	LS03	LS03	LS03	LS03	LS03	LS03	LS03	LS03	LS03	LS03	LS03	LS03	–	FULL CLOSE LIMIT SWITCH	6
PM01	PM02	PM03	PM04	PM05	PM06	PM07	PM08	PM09	PM10	PM11	PM12	PM13	–	DAMPER POSITION TRANSMITTER	7

FOR OFFICIAL USE ONLY

RECORD DRAWING
DATE 06/08/98

DATE 07-31-97 ISSUE CORRECTED TO AS-BUILT BY MES INITIAL

Knight Architects Engineers Planners, Inc.
5449 West Randolph Street
Chicago, IL 60641
Established in 1945
A Leslie E. Robertson Associates, Inc. Company
© Copyright 1997 Knight Architects Engineers Planners, Inc.

DSGN KOWALIK KSIAZEK CHK RAUCH
SUPV RAUCH CH ENGR
SUBMITTED BY DATE
FIRM MEMBER TITLE
EIC BR HD
FPE DIR
APPROVED DATE
OFFICER IN CHARGE
APPROVED DATE
EFD FOR COMMANDER NAVFAC

ARCH. & ENGR. SEAL

DEPARTMENT OF THE NAVY NAVAL FACILITIES ENGINEERING COMMAND
SOUTHERN DIVISION
CHARLESTON, S.C.

NAVAL TRAINING CENTER GREAT LAKES, ILLINOIS

DAMAGE CONTROL SCHOOL
FFT FAN HTEF-1,2,3,4 AND 8
WIRING DIAGRAMS

SIZE	CODE IDENT NO.	NAVFAC DRAWING NO.	DRAWING NO.
F	80091	5276573	M4-3
SCALE 1/4"=1'-0"		CONSTR CONTR NO. N62467-93-C-1143 SPEC 06-93-1143	SHEET 159 OF

Filename: P:\PAPER\CHANGED\MEB\JHPS2403 User: TWhite Date&time: 10/31/97 08:51:18

159

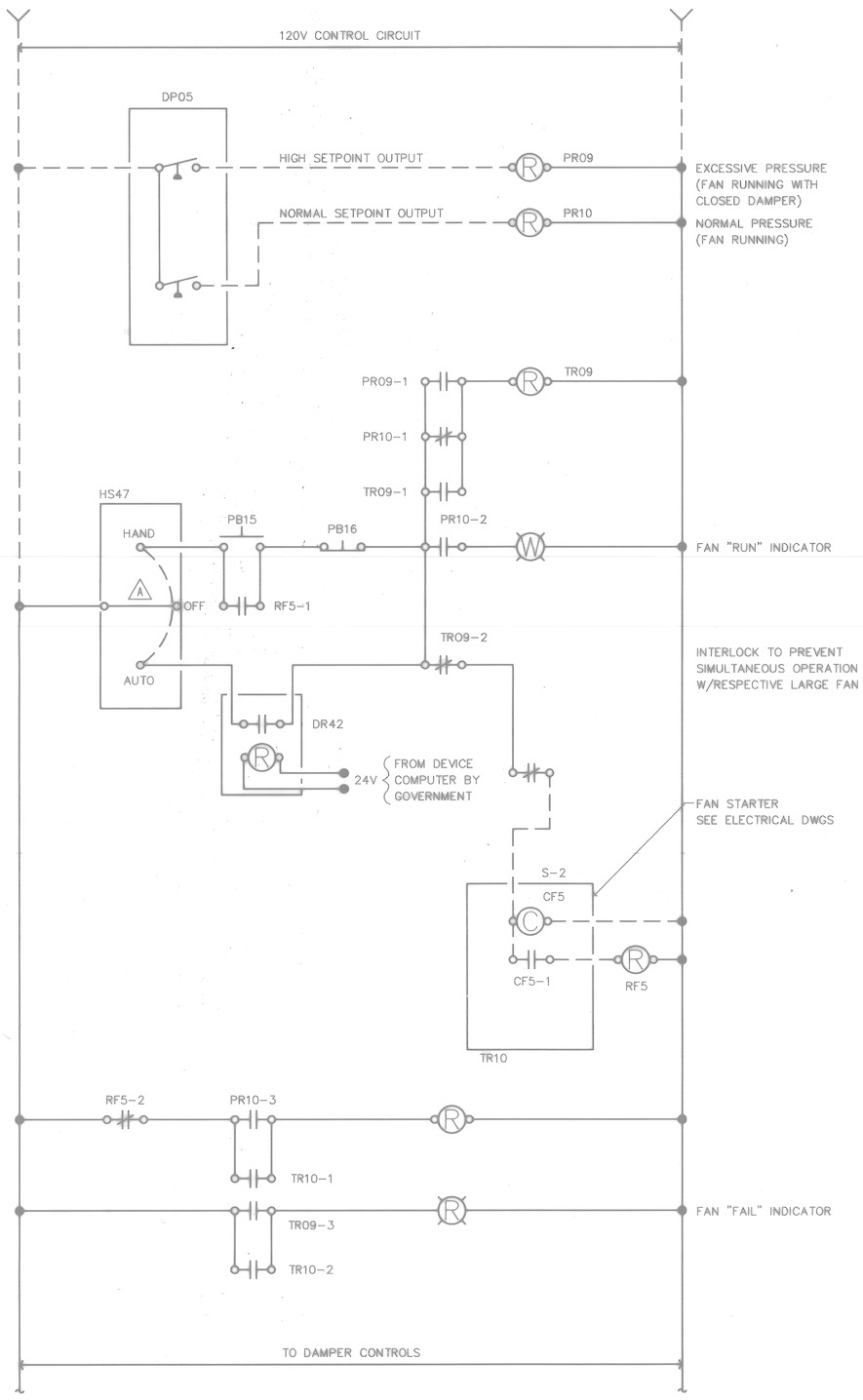

EXHAUST FAN HTEF-5 WIRING

SCALE: NONE (TYP. FOR HTEF-5,6,7 & 9)

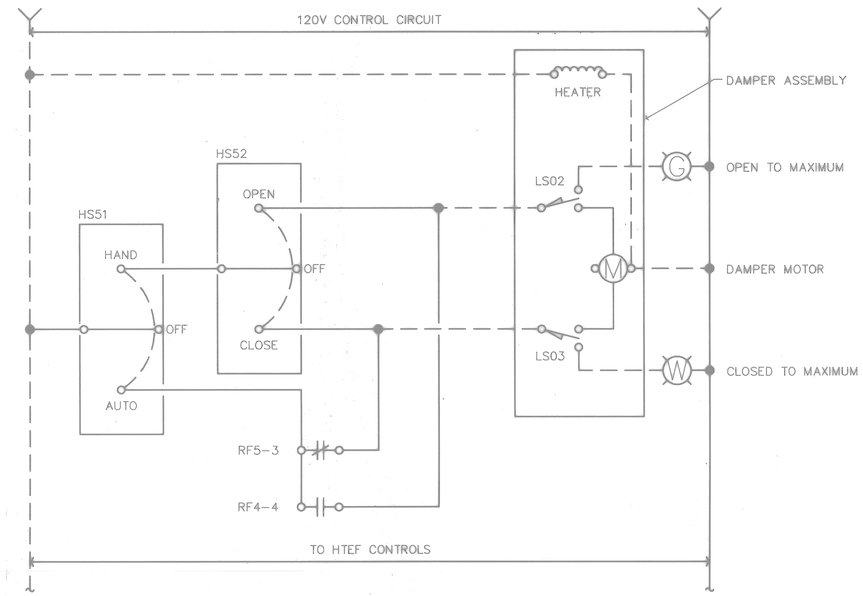

HTEF-5 INLET DAMPER CONTROL WIRING

SCALE: NONE (TYP. FOR HTEF-5,6,7 & 9)

COMPONENT SCHEDULE EXHAUST FANS HTEF-5,6,7 AND 9

HTEF-5	HTEF-6	HTEF-7	HTEF-9	ITEM TYPE	DESCRIPTION AND FUNCTION	NOTES
CF5	CF6	CF7	CF9	–	STARTER CONTACTOR	2
DP05	DP06	DP07	DP08	P2	DIFF. PRESSURE SWITCH, FAN	–
DR42	DR43	DR44	DR45	R2	RELAY, DEVICE START	–
HS47	HS48	HS49	HS50	S3	AUTO/MANUAL SELECTOR SWITCH	–
PB15	PB17	PB19	PB21	S1	MANUAL START PUSHBUTTON	–
PB16	PB18	PB20	PB22	S2	MANUAL STOP PUSHBUTTON	–
PR09	PR11	PR13	PR15	R1	PRESSURE RELAY, HIGH PRESSURE	–
PR10	PR12	PR14	PR16	R1	PRESSURE RELAY, NORMAL RELAY	–
RF5	RF6	RF7	RF9	R1	RELAY, FAN RUN STATUS	–
TR09	TR11	TR13	TR15	R4	TIMING RELAY, DELAY "OFF"	–
TR10	TR12	TR14	TR16	R4	TIMING RELAY, DELAY "FAIL"	–

COMPONENT SCHEDULE DAMPERS AT FANS HTEF-5,6,7 AND 9

HTEF-5	HTEF-6	HTEF-7	HTEF-9	ITEM TYPE	DESCRIPTION AND FUNCTION	NOTES
–	–	–	–	–	MOTORIZED DAMPER ASSEMBLY	3
HS51	HS53	HS55	HS57	S3	AUTO/MANUAL SELECTOR SWITCH	4
HS52	HS54	HS56	HS58	S4	MANUAL OPEN/CLOSE CONTROL	–
LS02	LS02	LS02	LS02	LS02	FULL OPEN LIMIT SWITCH	5
LS03	LS03	LS03	LS03	LS03	FULL CLOSE LIMIT SWITCH	5

GENERAL NOTES:

1. RESPECTIVE POWER CIRCUIT TO BE PROVIDED BY DIVISION 16.
2. REFER TO ELECTRICAL DRAWINGS FOR STARTER DESCRIPTION AND LOCATION.
3. REFER TO SPECIFICATION 15972 FOR DESCRIPTION OF MOTORIZED DAMPER ASSEMBLY.
4. IN AUTOMATIC MODE, DAMPER OPENING AND CLOSING SHALL BE INTERLOCKED WITH RESPECTIVE EXHAUST FANS HTEF-5,6,7,9 TO ALARM IF THEIR RESPECTIVE INLET DAMPERS ARE CLOSED AND THE FAN IS ON. EXHAUST FANS HTEF-5,6,7,9 SHALL ALSO ALARM IF THEY ARE ON AND THEIR DAMPERS ARE OPEN WHEN THEIR RESPECTIVE HTEF-1,2,3,4 & 8 FANS ARE ON.
5. LS02 AND LS03 ARE TYPICAL DESIGNATIONS FOR LIMIT SWITCHES TO BE PROVIDED INTEGRAL WITH DAMPER MOTOR ASSEMBLY.

FOR OFFICIAL USE ONLY

RECORD DRAWING
DATE 06/08/98

DATE 07-31-97 ISSUE CORRECTED TO AS-BUILT BY MEB INITIAL

Knight Architects Engineers Planners, Inc.
Chicago, IL 60601
A Leader & Sugrue & Associates, Inc. Company
©Copyright 1994 Knight Architects Engineers Planners, Inc.

DEPARTMENT OF THE NAVY — NAVAL FACILITIES ENGINEERING COMMAND
SOUTHERN DIVISION
CHARLESTON, S.C.

DSGN KOWALIK KSIAZEK DRF RAUCH
SUPV RAUCH CH ENGR
SUBMITTED BY DATE
FIRM MEMBER TITLE
E/C BR NO
FPE DIR
APPROVED DATE
OFFICER IN CHARGE
APPROVED DATE
EFD FOR COMMANDER, NAVFAC

NAVAL TRAINING CENTER — GREAT LAKES, ILLINOIS

DAMAGE CONTROL SCHOOL
FFT FAN HTEF-5,6,7 AND 9
WIRING DIAGRAMS

SIZE	CODE IDENT NO.	NAVFAC DRAWING NO.	DRAWING NO.
F	80091	5276574	M4-4
		CONSTR CONTR NO. N62467-93-C-1143	
SCALE NO SCALE		SPEC 08-93-1143	SHEET 60 OF

ARCH. & ENGR. SEAL

Date&time: 10/31/97 08:53:22 User: TWhite Filename: P:\PAPER\CHANGED\MEB\JHPS2404

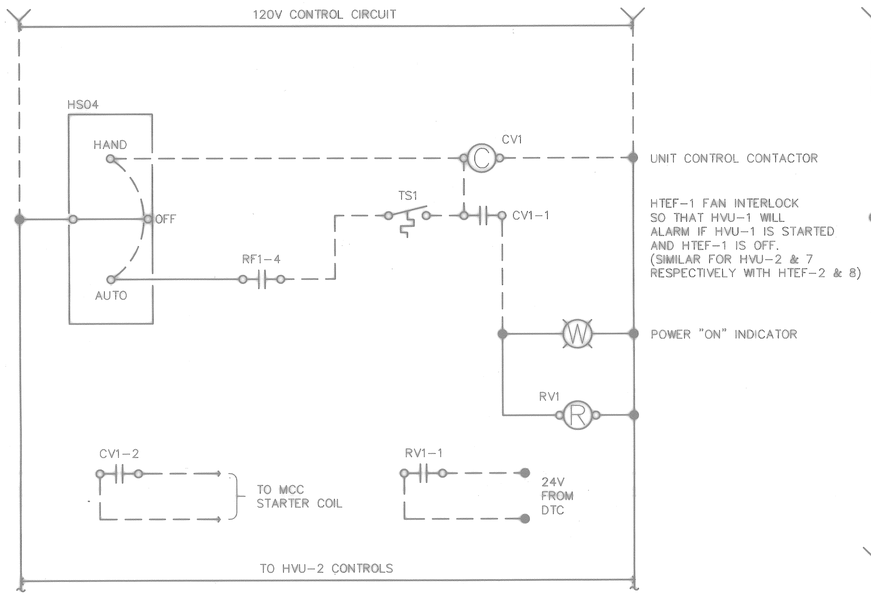

NOTE: HVU-2 IS SIMILAR EXCEPT HVU-2 SHALL INTERLOCK WITH HTEF-2 AND HVU-7 SHALL INTERLOCK WITH HTEF-8.

HVU-1, HVU-2 AND HVU-7 CONTROL WIRING

SCALE: NONE

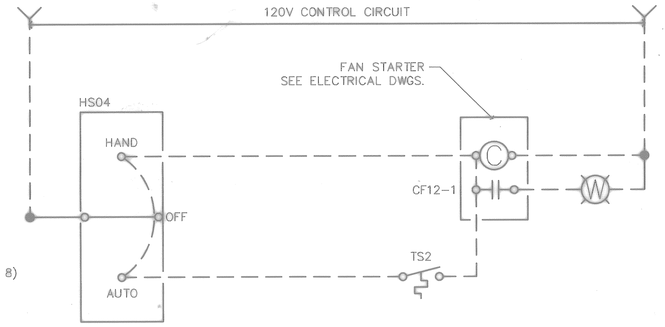

ESCAPE TRUNK EXHAUST FAN EF-5 WIRING

SCALE: NONE

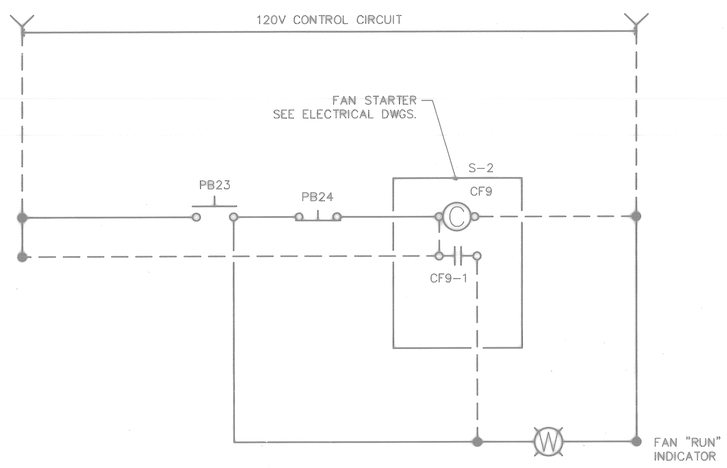

NOTE: EF-5, 8 & 9 SHALL BE CONNECTED TO THEIR RESPECTIVE STARTERS.

EAST STAIR, WEST STAIR, SECOND FLOOR STAGING EXHAUST FANS EF-8,9,10 WIRING (A)

SCALE: NONE

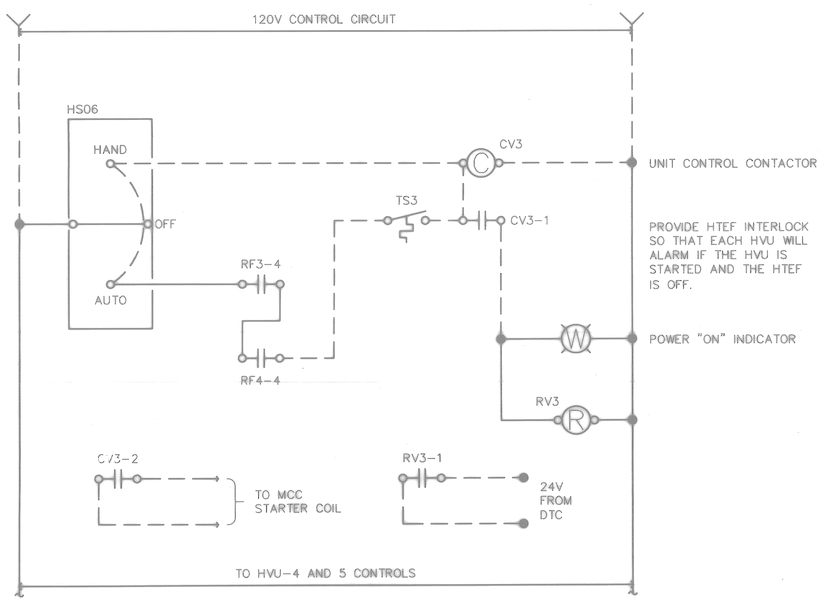

NOTE: HVU-4,5,6 SHALL INTERLOCK WITH HTEF-3 & 4.

HVU-3,4,5,6 CONTROL WIRING

SCALE: NONE

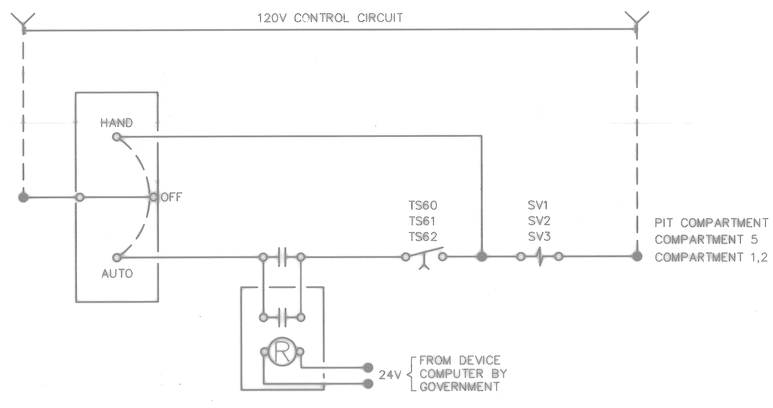

(A) **COOL DOWN SYSTEM WIRING (TYPICAL FOR 3)**

SCALE: NONE

COMPONENT SCHEDULE HEATING AND VENTILATING UNITS

HVU-1	HVU-2	HVU-3	HVU-4	HVU-5	HVU-6	HVU-7	ITEM TYPE	DESCRIPTION AND FUNCTION	NOTES
CV1	CV2	CV3	CV4	CV5	CV6	CV7	–	UNIT CONTROL CONTACTOR	2
HS04	HS05	HS06	HS07	HS08	HS09	HS010	S3	AUTO/MANUAL SELECTOR SWITCH	–
RV1	RV2	RV3	RV4	RV5	RV6	RV7	RV1	FAN STATUS RELAY	–
TS1	TS1	TS1	TS1	TS1	TS1	TS1	–	ROOM THERMOSTAT	2

COMPONENT SCHEDULE EXHAUST FANS EF-5,8,9,10

EF-5	EF-8	EF-9	EF-10	ITEM TYPE	DESCRIPTION AND FUNCTION	NOTES
CF12	CF9	CF10	CF11	–	STARTER CONTACTOR	3
–	PB23	PB25	PB27	S1	MANUAL START PUSHBUTTON	–
–	PB24	PB26	PB28	S2	MANUAL STOP PUSHBUTTON	–
HS59	–	–	–	S3	AUTO/MANUAL CONTROL SWITCH	–
TS2	–	–	–	T1	LINE VOLTAGE THERMOSTAT (AUTO-MODE)	–

COMPONENT SCHEDULE COOL DOWN SYSTEM

PIT VALVE	COMPART. 5	COMPART. 1,2	ITEM TYPE	DESCRIPTION AND FUNCTION	NOTES
HS60	HS61	HS62	S6	ON/OFF INTERVAL TIMER	–
SV1	SV2	SV3	V1	SOLENOID VALVE	–

GENERAL NOTES:

1. DIVISION 16 SHALL PROVIDE ELECTRICAL POWER TO ALL HVU'S.
2. CONTROL CONTACTOR AND THERMOSTATS SHALL BE PROVIDED.
3. REFER TO ELECTRICAL DRAWINGS FOR STARTER LOCATION.

(A) HEATING AND VENTILATING UNIT CONTROLS

PROVIDE A FULLY FUNCTIONAL CONTROL SYSTEM COMPLETE WITH ALL REQUIRED CONTROLS, SENSORS, WIRING AND ACCESSORIES TO PROVIDE
ALL FUNCTIONS DESCRIBED BELOW AND AS INDICATED ON THE DTC FACEPLATE DETAIL.
SYSTEM SHALL BE CONFIGURED TO OPERATE FROM A 120 VOLT POWER SOURCE.
THE FOLLOWING SHALL BE TYPICAL FOR HVU-1,2,3,4,5,6,7.

A CONTROL PANEL SHALL BE MOUNTED ADJACENT TO EACH HEATING AND VENTILATING UNIT.
THE PANEL SHALL BE NEMA 3R FULLY WEATHERPROOF CONSTRUCTION.
THE PANEL SHALL HAVE A BLANK HINGED OUTER COVER AND AN INSIDE HINGED PANEL.
PROVIDE THE FOLLOWING MOUNTED IN THE PANEL:

PILOT LIGHT INDICATOR LIGHTS FOR "FAN ON" AND "FAN FAILURE".

DIAL THERMOMETER INDICATORS FOR OUTSIDE AIR TEMPERATURE, SUPPLY AIR TEMPERATURE, HOT WATER SUPPLY TEMPERATURE, AND HOT WATER RETURN TEMPERATURE.

SEQUENCE OF OPERATION:

THE UNIT FAN CONTROLS SHALL BE ENERGIZED BY THE DATA TERMINAL CABINET.
ONCE THE FAN CONTROLS ARE ENERGIZED, AN OUTSIDE AIR THERMOSTAT SHALL START THE FAN.
OUTSIDE AIR THERMOSTAT SHALL BE UNIT-MOUNTED, ADJUSTABLE, AND SET AT 50 DEGREES F.
WHEN THE FAN IS ENERGIZED, THE CONTROLS FOR THE HOT WATER COIL SHALL ALSO BE ENERGIZED BY A SEPARATE CONTROL CIRCUIT.
SHOULD OUTSIDE AIR TEMPERATURE DROP BELOW 35 DEGREES F, THE CONTROLS FOR THE HOT WATER COIL SHALL BE ENERGIZED WHETHER OR NOT THE FAN IS ENERGIZED.
ONCE THE HOT WATER COILS ARE ENERGIZED, THE HOT WATER CONTROL VALVE SHALL BE MODULATED TO MAINTAIN A SUPPLY AIR TEMPERATURE WHICH SHALL BE RESET BY OUTSIDE AIR TEMPERATURE AS SCHEDULED BELOW:

OUTSIDE AIR TEMPERATURE	SUPPLY AIR TEMPERATURE
-20	120
-10	110
0	100
+10	90
+20	80
+30	70
+40	60
+50	50

THE UNIT FAN START CONTACTOR OR RELAY SHALL INCLUDE A NORMALLY-OPEN AUXILIARY CONTACT WHICH SHALL BE USED TO SIGNAL STATUS TO THE DATA TERMINAL CABINET.

FOR OFFICIAL USE ONLY

RECORD DRAWING
DATE 06/08/98

(A) DATE 07-31-97 ISSUE CORRECTED TO AS-BUILT BY MEB INITIAL

Knight Architects Engineers Planners, Inc.
549 West Randolph Street
Chicago, IL 60661
Established in 1945
A Leader in Knight & Associates, Inc. Company
© Copyright 1997 Knight Architects Engineers Planners, Inc.

DSGN KOWALISK KSIAZEK CHK RAUCH
SUPV RAUCH CH. ENGR
SUBMITTED BY DATE
FIRM MEMBER TITLE
E/C BR HD
FPM DIR
APPROVED DATE
OFFICER IN CHARGE
APPROVED DATE
EFD FOR COMMANDER, NAVFAC

ARCH. & ENGR. SEAL

DEPARTMENT OF THE NAVY
NAVAL FACILITIES ENGINEERING COMMAND
SOUTHERN DIVISION
CHARLESTON, S.C.

NAVAL TRAINING CENTER GREAT LAKES, ILLINOIS

DAMAGE CONTROL SCHOOL
FFT HVU-1 THRU HVU-7 AND MISC
EXHAUST FANS WIRING DIAGRAMS

SIZE	CODE IDENT NO.	NAVFAC DRAWING NO.	DRAWING NO.
F	80091	5276575	M4-5

CONSTR CONTR NO. N62467-93-C-1143
SCALE NO SCALE SPEC 06-93-1143 SHEET 61 OF

Date&time: 10/31/97 08:55:08 User: TWhite Filename: P:\PAPER\CHANGED\MEB\JHPS2405

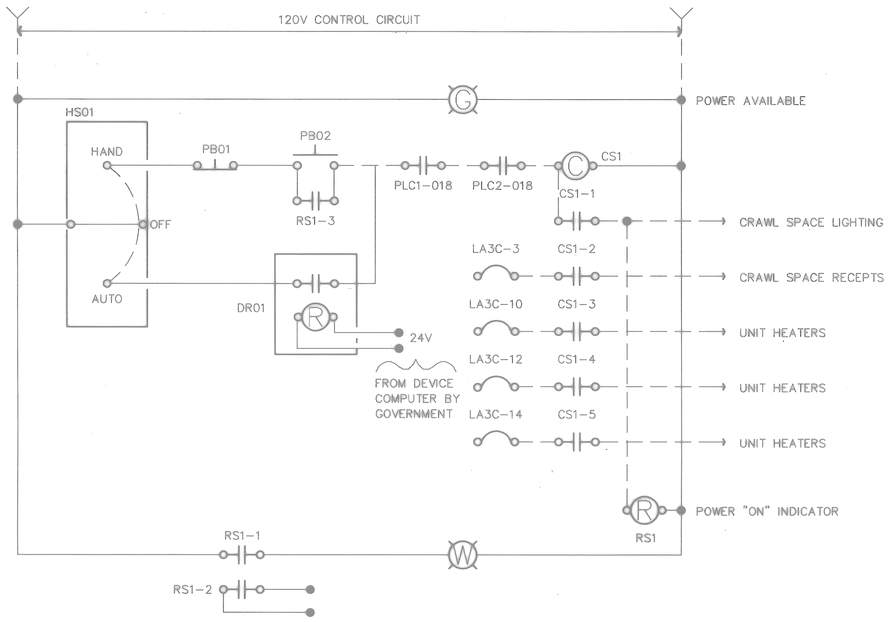

NOTE: 1ST FLOOR CRAWL SPACE SHOWN.

CRAWL SPACE LIGHTING AND POWER CONTROL WIRING

SCALE: NONE (TYP. FOR 2ND FLOOR CRAWL SPACE AND PIT CRAWL SPACE)

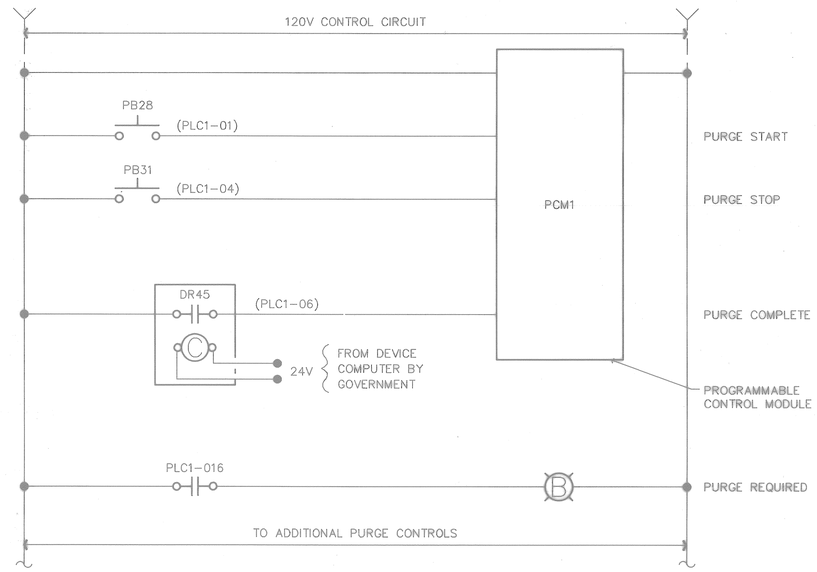

NOTE: COMPARTMENTS 1,4,5 AND 8 SHOWN.
WIRING FOR 2,3,6,7 AND PIT COMPARTMENTS ARE TYPICAL.

PURGE SYSTEM WIRING

SCALE: NONE

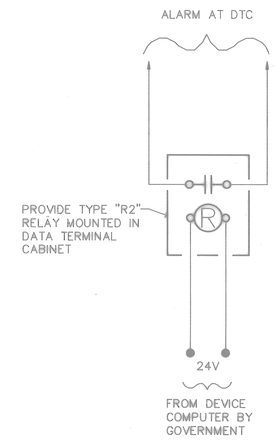

A PROPANE ALARM RELAY

SCALE: NONE

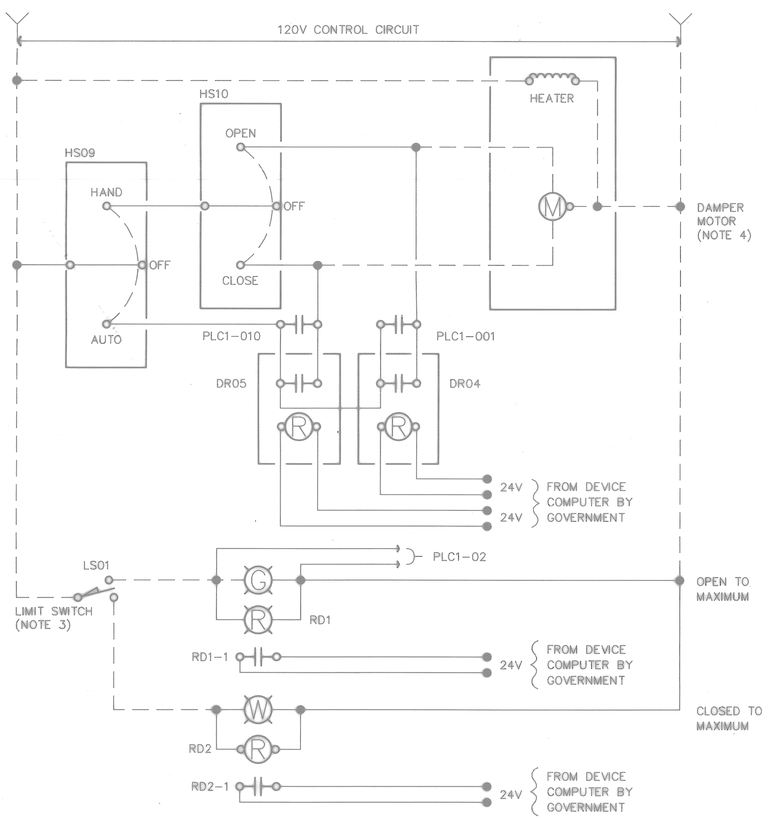

NOTE: 1ST FLOOR COMPARTMENT 2 AND 3 SHOWN. DIAGRAM IS TYPICAL FOR COMPARTMENTS 1 AND 4, 6 AND 7, AND 5 AND 8.

CRAWL SPACE INLET DAMPER CONTROL WIRING

SCALE: NONE (TYP. FOR COMPARTMENTS 1 THRU 8)

COMPONENT SCHEDULE
CRAWL SPACE INLET DAMPERS

COMPART. 2/3	COMPART. 1/4	COMPART. 6/7	COMPART. 5/8	PIT COMPART.	ITEM TYPE	DESCRIPTION AND FUNCTION	NOTES
–	–	–	–	–	–	MOTORIZED DAMPER ASSEMBLY	5
DR04	DR06	DR08	DR10	DR12	R2	RELAY, DEVICE OPEN	–
DR05	DR07	DR09	DR11	DR13	R2	RELAY, DEVICE CLOSE	–
HS09	HS11	HS13	HS15	HS17	S3	AUTO/MANUAL SELECTOR SWITCH	6
HS10	HS12	HS14	HS16	HS18	S4	MANUAL OPEN/CLOSE CONTROL	–
LS01	LS01	LS01	LS01	LS01	L1	2 POSITION LIMIT SWITCH	7
RD1	RD3	RD5	RD7	RD9	R1	DAMPER STATUS RELAY – FULL OPEN	–
RD2	RD4	RD6	RD8	RD10	R1	DAMPER STATUS RELAY – FULL CLOSE	–

COMPONENT SCHEDULE
CRAWL SPACE, LIGHTING AND POWER

1ST FLOOR	2ND FLOOR	PIT COMPART.	ITEM TYPE	DESCRIPTION AND FUNCTION	NOTES
CS1	CS2	CS3	–	MULTI-POLE CONTACTOR	1
DR01	DR02	DR03	R2	RELAY, DEVICE INTERFACE	–
HS01	HS02	HS03	S5	AUTO/MANUAL SELECTOR SWITCH	2
PB01	PB03	PB05	S1	MANUAL "ON" PUSHBUTTON	–
PB02	PB04	PB06	S2	MANUAL "OFF" PUSHBUTTON	–
RS1	RS2	RS3	R1	RELAY – CRAWL SPACE STATUS	–

COMPONENT SCHEDULE
PURGE SYSTEM

COMPART. 1458	COMPART. 2367	PIT COMPART.	ITEM TYPE	DESCRIPTION AND FUNCTION	NOTES
DR45	DR46	DR47	R2	RELAY, PURGE REQUIRED	–
PB28	PB29	PB30	S1	PUSHBUTTON, START PURGE	–
PB31	PB32	PB33	S7	PUSHBUTTON STOP PURGE	–
PCM1	PCM2	PCM3	C2	PROGRAMMABLE CONTROLLER	–

GENERAL NOTES:

1. PROVIDE MULTIPOLE CONTACTORS CS1, CS2 AND CS3.
2. AUTOMATIC MODE SHALL BE CONTROLLED BY THE GOVERNMENT'S DEVICE COMPUTER.
3. CONNECT ALL LIMIT SWITCHES FOR EACH COMPARTMENT GROUP IN SERIES SUCH THAT ALL SWITCHES MUST BE SATISFIED TO SIGNAL FULL OPEN OR FULL CLOSE.
4. CONNECT EACH GROUP OF CRAWL SPACE INLET DAMPERS IN PARALLEL.
5. REFER TO SPECIFICATION 15972 FOR DESCRIPTION OF DAMPER ASSEMBLY.
6. A AUTOMATIC MODE SHALL BE CONTROLLED BY THE GOVERNMENT'S DEVICE COMPUTER AND THE LOGIC CONTROLLER. DEMONSTRATE THAT MANUAL MODE WORKS.
7. LS01 IS A TYPICAL DESIGNATION FOR LIMIT SWITCHES TO BE PROVIDED INTEGRAL WITH DAMPER MOTOR ASSEMBLY.

FOR OFFICIAL USE ONLY

RECORD DRAWING
DATE 06/08/98

A DATE 07-31-97 ISSUE CORRECTED TO AS-BUILT BY MEB INITIAL M.A.W.

Knight Architects Engineers Planners, Inc.
549 West Randolph Street
Chicago, IL 60661
Established 1906
© Copyright 1997 Knight Architects Engineers Planners, Inc.

DSGN KOWALIK KSIAZEK RAUCH
SUPV RAUCH CH ENGR
SUBMITTED BY DATE
FIRM MEMBER TITLE
EIC SR HO
FPE DIR
APPROVED DATE
OFFICER IN CHARGE
APPROVED DATE
FFD FOR COMMANDER, NAVFAC

DEPARTMENT OF THE NAVY — NAVAL FACILITIES ENGINEERING COMMAND
SOUTHERN DIVISION
CHARLESTON, S.C.
NAVAL TRAINING CENTER — GREAT LAKES, ILLINOIS

DAMAGE CONTROL SCHOOL
FFT CRAWL SPACE CONTROLS
AND WIRING DIAGRAMS

SIZE	CODE IDENT NO.	NAVFAC DRAWING NO.	DRAWING NO.
F	80091	5276576	M4-6

CONSTR CONTR NO. N62467-93-C-1143
SCALE NO SCALE SPEC. 06-93-1143 SHEET 162 OF

ARCH. & ENGR. SEAL

Date&time: 10/31/97 08:57:47 User: TWhite Filename: P:\PAPER\CHANGED\MEB\JHPS2406

PLC1 LOGIC DESCRIPTION (AND PLC2)

PURGE MODE:

1.1 RECEIVE PURGE REQUEST (PLC1-01)
1.2 OPEN REQUIRED DAMPERS (PLC1-001 THRU PLC1-007)
1.3 RECEIVE DAMPER OPEN STATUS (PLC1-02, PLC1-03)
1.4 START EXHAUST FAN HTEF-1 (PLC1-008)
1.5 START INTERNAL RUN TIMER (TIME SETTING TO BE DETERMINED BY CONTRACTING OFFICER)
1.6 RUN TIME COMPLETED/STOP EXHAUST FAN HTEF-1 (PLC-008)
1.7 CLOSE REQUIRED DAMPERS (PLC1-009 THRU PLC1-015)

2.1 FAN FAIL SIGNAL NOT RECEIVED (PLC1-05)
2.2 ENERGIZE PURGE COMPLETE LIGHT (PLC1-016)
2.3 ENABLE 1ST FLOOR CRAWL SPACE ELECTRICAL CIRCUITS (PLC1-017)
2.4 ENABLE 2ND FLOOR CRAWL SPACE ELECTRICAL CIRCUITS (PLC1-018)

3.1 FAN FAIL SIGNAL RECEIVED (PLC1-05)
3.2 STOP EXHAUST FAN HTEF-1 (PLC1-008)
3.3 CLOSE REQUIRED DAMPERS (PLC1-009 THRU PLC1-015)

4.1 RECEIVE PURGE REQUIRED SIGNAL FROM DEVICE COMPUTER (PLC1-06)
4.2 DE-ENERGIZE PURGE COMPLETE LIGHT (PLC1-016)
4.3 DISABLE 1ST FLOOR CRAWL SPACE ELECTRICAL CIRCUITS (PLC1-017)
4.4 DISABLE 2ND FLOOR CRAWL SPACE ELECTRICAL CIRCUITS (PLC1-018)

PURGE MODE:

1.1 RECEIVE EXHAUST FAN HTEF-1 STARTED SIGNAL (PLC1-07)
1.2 OPEN EXHAUST FAN HTEF-1 INLET DAMPER (PLC1-003)

2.1 RECEIVE EXHAUST FAN HTEF-1 STOP SIGNAL (PLC1-08)
2.2 CLOSE EXHAUST FAN HTEF-1 INLET DAMPER (PLC1-011)

3.1 RECEIVE EXHAUST FAN HTEF-1 FAIL (PLC1-05)
3.2 STOP EXHAUST FAN HTEF-1 (PLC1-008)
3.3 CLOSE EXHAUST FAN HTEF-1 INLET DAMPER (PLC1-011)

NOTE: PROGRAM CONTROLLER TO IGNORE FAN RUN SIGNAL (PLC1-07) DURING PURGE. ALL CONTACT CLOSURES FOR OPERATING MOTORIZED DAMPERS SHALL BE PROGRAMMED FOR A 30 SECOND DURATION. CONTROL OF EXHAUST FAN HTEF-2 DURING OPERATING MODE SHALL BE THE SAME AS HTEF-1.

PLC5 LOGIC DESCRIPTION (HTEF-5)

PURGE MODE:

1.1 RECEIVE PURGE REQUEST (PLC5-01)
1.2 OPEN REQUIRED DAMPERS (PLC5-001 THRU PLC5-007)
1.3 RECEIVE DAMPER OPEN STATUS (PLC5-02, PLC5-03)
1.4 START EXHAUST FAN HTEF-8 (PLC5-008)
1.5 START INTERNAL RUN TIMER (TIME SETTING TO BE DETERMINED BY CONTRACTING OFFICER)
1.6 RUN TIME COMPLETED/STOP EXHAUST FAN HTEF-8 (PLC5-008)
1.7 CLOSE REQUIRED DAMPERS (PLC5-009 THRU PLC5-015)

2.1 FAN FAIL SIGNAL NOT RECEIVED (PLC5-05)
2.2 ENERGIZE PURGE COMPLETE LIGHT (PLC5-016)
2.3 ENABLE 1ST FLOOR CRAWL SPACE ELECTRICAL CIRCUITS (PLC5-017)
2.4 ENABLE 2ND FLOOR CRAWL SPACE ELECTRICAL CIRCUITS (PLC5-018)

3.1 FAN FAIL SIGNAL RECEIVED (PLC5-05)
3.2 STOP EXHAUST FAN HTEF-8 (PLC5-008)
3.3 CLOSE REQUIRED DAMPERS (PLC5-009 THRU PLC5-015)

4.1 RECEIVE PURGE REQUIRED SIGNAL FROM DEVICE COMPUTER (PLC5-06)
4.2 DE-ENERGIZE PURGE COMPLETE LIGHT (PLC5-016)
4.3 DISABLE 1ST FLOOR CRAWL SPACE ELECTRICAL CIRCUITS (PLC5-017)
4.4 DISABLE 2ND FLOOR CRAWL SPACE ELECTRICAL CIRCUITS (PLC5-018)

PURGE MODE:

1.1 RECEIVE EXHAUST FAN HTEF-8 STARTED SIGNAL (PLC5-07)
1.2 OPEN EXHAUST FAN HTEF-8 INLET DAMPER (PLC5-003)

2.1 RECEIVE EXHAUST FAN HTEF-8 STOP SIGNAL (PLC5-08)
2.2 CLOSE EXHAUST FAN HTEF-8 INLET DAMPER (PLC5-011)

3.1 RECEIVE EXHAUST FAN HTEF-8 FAIL (PLC5-05)
3.2 STOP EXHAUST FAN HTEF-8 (PLC5-008)
3.3 CLOSE EXHAUST FAN HTEF-8 INLET DAMPER (PLC5-011)

NOTE: PROGRAM CONTROLLER TO IGNORE FAN RUN SIGNAL (PLC5-07) DURING PURGE. ALL CONTACT CLOSURES FOR OPERATING MOTORIZED DAMPERS SHALL BE PROGRAMMED FOR A 30 SECOND DURATION.

PLC3 LOGIC DESCRIPTION (AND PLC4)

PURGE MODE:

1.1 RECEIVE PURGE REQUEST (PLC3-01)
1.2 OPEN REQUIRED DAMPERS (PLC3-001 THRU PLC3-003)
1.3 RECEIVE DAMPER OPEN STATUS (PLC3-02)
1.4 START EXHAUST FAN HTEF-3 (PLC3-004)
1.5 START INTERNAL RUN TIMER (TIME SETTING TO BE DETERMINED BY CONTRACTING OFFICER)
1.6 RUN TIME COMPLETED/STOP EXHAUST FAN HTEF-3
1.7 CLOSE REQUIRED DAMPERS (PLC3-006 THRU PLC3-008)

2.1 FAN FAIL SIGNAL NOT RECEIVED (PLC3-04)
2.2 ENERGIZE PURGE COMPLETE LIGHT (PLC3-009)
2.3 ENABLE PIT CRAWL SPACE ELECTRICAL CIRCUITS (PLC3-010)

3.1 FAN FAIL SIGNAL RECEIVED (PLC3-04)
3.2 STOP EXHAUST FAN HTEF-3 (PLC3-004)
3.3 CLOSE REQUIRED DAMPERS (PLC3-006 THRU PLC3-008)

4.1 RECEIVE PURGE REQUIRED SIGNAL FROM DEVICE COMPUTER (PLC3-06)
4.2 DE-ENERGIZE PURGE COMPLETE LIGHT (PLC3-009)
4.3 DISABLE PIT CRAWL SPACE ELECTRICAL CIRCUITS (PLC3-010)

PURGE MODE:

1.1 RECEIVE EXHAUST FAN HTEF-3 STARTED SIGNAL (PLC3-07)
1.2 OPEN EXHAUST FAN HTEF-3 INLET DAMPER (PLC3-002)

2.1 RECEIVE EXHAUST FAN HTEF-3 STOP SIGNAL (PLC3-08)
2.2 CLOSE EXHAUST FAN HTEF-3 INLET DAMPER (PLC3-006)

3.1 RECEIVE EXHAUST FAN HTEF-3 FAIL (PLC3-04)
3.2 STOP EXHAUST FAN HTEF-3 (PLC3-004)
3.3 CLOSE EXHAUST FAN HTEF-3 INLET DAMPER (PLC3-006)

NOTE: PROGRAM CONTROLLER TO IGNORE FAN RUN SIGNAL (PLC3-07, PLC3-09) DURING PURGE. ALL CONTACT CLOSURES FOR OPERATING MOTORIZED DAMPERS SHALL BE PROGRAMMED FOR A 30 SECOND DURATION. CONTROL OF EXHAUST FAN HTEF-4 DURING OPERATING MODE SHALL BE THE SAME AS HTEF-3.

HTEF-1 LOGIC SCHEDULE PLC1

120 VOLT DISCRETE INPUTS	
ELEMENT NO.	DESCRIPTION
PLC1-01	COMPARTMENT 1 & 5 PURGE REQUEST
PLC1-02	CRAWL SPACE COMPARTMENT 1 INLET DAMPERS OPEN
PLC1-03	CRAWL SPACE COMPARTMENT 5 INLET DAMPERS OPEN
PLC1-04	COMPARTMENT 1 & 5 PURGE CANCELLED
PLC1-05	EXHAUST FAN HTEF-1 FAILURE
PLC1-06	COMPARTMENT 1 & 5 PURGE REQUIRED
PLC1-07	EXHAUST FAN HTEF-1 STARTED
PLC1-08	EXHAUST FAN HTEF-1 STOPPED
120 VOLT DISCRETE CONTACT OUTPUTS	
ELEMENT NO.	DESCRIPTION
PLC1-001	OPEN CRAWL SPACE COMPARTMENT 1 DAMPERS
PLC1-002	OPEN CRAWL SPACE COMPARTMENT 5 DAMPERS
PLC1-003	OPEN EXHAUST FAN HTEF-1 INLET DAMPER
PLC1-004	OPEN COMPARTMENT 1 DUCT DAMPER
PLC1-005	OPEN COMPARTMENT 5 DUCT DAMPER
PLC1-006	SPARE
PLC1-007	SPARE
PLC1-008	START/STOP EXHAUST FAN HTEF-1
PLC1-009	CLOSE CRAWL SPACE COMPARTMENT 1 DAMPERS
PLC1-010	CLOSE CRAWL SPACE COMPARTMENT 5 DAMPERS
PLC1-011	CLOSE EXHAUST FAN HTEF-1 INLET DAMPER
PLC1-012	CLOSE COMPARTMENT 1 DUCT DAMPER
PLC1-013	CLOSE COMPARTMENT 4 DUCT DAMPER
PLC1-014	CLOSE COMPARTMENT 5 DUCT DAMPER
PLC1-015	SPARE
PLC1-016	ENERGIZE PURGE COMPLETE LIGHT
PLC1-017	ENABLE 1ST FLOOR CRAWL SPACE ELECTRICAL CIRCUITS
PLC1-018	ENABLE 2ND FLOOR CRAWL SPACE ELECTRICAL CIRCUITS
PLC1-019	SPARE
PLC1-020	SPARE

HTEF-2 LOGIC SCHEDULE PLC2

120 VOLT DISCRETE INPUTS	
ELEMENT NO.	DESCRIPTION
PLC2-01	COMPARTMENT 2 & 6 PURGE REQUEST
PLC2-02	CRAWL SPACE COMPARTMENT 2 INLET DAMPERS OPEN
PLC2-03	CRAWL SPACE COMPARTMENT 6 INLET DAMPERS OPEN
PLC2-04	COMPARTMENT 2 & 6 PURGE CANCELLED
PLC2-05	EXHAUST FAN HTEF-2 FAILURE
PLC2-06	COMPARTMENT 2 & 6 PURGE REQUIRED
PLC2-07	EXHAUST FAN HTEF-2 STARTED
PLC2-08	EXHAUST FAN HTEF-2 STOPPED
120 VOLT DISCRETE CONTACT OUTPUTS	
ELEMENT NO.	DESCRIPTION
PLC2-001	OPEN CRAWL SPACE COMPARTMENT 2 DAMPERS
PLC2-002	OPEN CRAWL SPACE COMPARTMENT 6 DAMPERS
PLC2-003	OPEN EXHAUST FAN HTEF-2 INLET DAMPER
PLC2-004	OPEN COMPARTMENT 2 DUCT DAMPER
PLC2-005	OPEN COMPARTMENT 6 DUCT DAMPER
PLC2-006	SPARE
PLC2-007	SPARE
PLC2-008	START/STOP EXHAUST FAN HTEF-2
PLC2-009	CLOSE CRAWL SPACE COMPARTMENT 2 DAMPERS
PLC2-010	CLOSE CRAWL SPACE COMPARTMENT 6 DAMPERS
PLC2-011	CLOSE EXHAUST FAN HTEF-2 INLET DAMPER
PLC2-012	CLOSE COMPARTMENT 2 DUCT DAMPER
PLC2-013	CLOSE COMPARTMENT 6 DUCT DAMPER
PLC2-014	SPARE
PLC2-015	SPARE
PLC2-016	ENERGIZE PURGE COMPLETE LIGHT
PLC2-017	ENABLE 1ST FLOOR CRAWL SPACE ELECTRICAL CIRCUITS
PLC2-018	ENABLE 2ND FLOOR CRAWL SPACE ELECTRICAL CIRCUITS
PLC2-019	SPARE
PLC2-020	SPARE

HTEF-3 LOGIC SCHEDULE PLC3

120 VOLT DISCRETE INPUTS	
ELEMENT NO.	DESCRIPTION
PLC3-01	PIT COMPARTMENT PURGE REQUEST
PLC3-02	PIT CRAWL SPACE DAMPERS FULL OPEN
PLC3-03	PIT COMPARTMENT PURGE CANCELLED
PLC3-04	EXHAUST FAN HTEF-3 FAILURE
PLC3-05	SPARE
PLC3-06	PIT COMPARTMENT PURGE REQUIRED
PLC3-07	EXHAUST FAN HTEF-3 STARTED
PLC3-08	EXHAUST FAN HTEF-3 STOPPED
PLC3-09	SPARE
PLC3-10	SPARE
PLC3-11	SPARE
PLC3-12	SPARE
120 VOLT DISCRETE CONTACT OUTPUTS	
ELEMENT NO.	DESCRIPTION
PLC3-001	OPEN PIT CRAWL SPACE INLET DAMPERS (ALL)
PLC3-002	OPEN EXHAUST FAN HTEF-3 INLET DAMPER
PLC3-003	SPARE
PLC3-004	START/STOP EXHAUST FAN HTEF-3
PLC3-005	SPARE
PLC3-006	CLOSE EXHAUST FAN HTEF-3 INLET DAMPER
PLC3-007	SPARE
PLC3-008	CLOSE CRAWL SPACE INLET DAMPERS (ALL)
PLC3-009	ENERGIZE PURGE COMPLETE LIGHT
PLC3-010	ENABLE PIT CRAWL SPACE ELECTRICAL CIRCUITS
PLC3-011	SPARE
PLC3-012	SPARE

HTEF-4 LOGIC SCHEDULE PLC4

120 VOLT DISCRETE INPUTS	
ELEMENT NO.	DESCRIPTION
PLC4-01	PIT COMPARTMENT PURGE REQUEST
PLC4-02	PIT CRAWL SPACE DAMPERS FULL OPEN
PLC4-03	PIT COMPARTMENT PURGE CANCELLED
PLC4-04	SPARE
PLC4-05	EXHAUST FAN HTEF-4 FAILURE
PLC4-06	PIT COMPARTMENT PURGE REQUIRED
PLC4-07	SPARE
PLC4-08	SPARE
PLC4-09	EXHAUST FAN HTEF-4 STARTED
PLC4-10	EXHAUST FAN HTEF-4 STOPPED
PLC4-11	SPARE
PLC4-12	SPARE
120 VOLT DISCRETE CONTACT OUTPUTS	
ELEMENT NO.	DESCRIPTION
PLC4-001	OPEN PIT CRAWL SPACE INLET DAMPERS (ALL)
PLC4-002	SPARE
PLC4-003	OPEN EXHAUST FAN HTEF-4 INLET DAMPER
PLC4-004	SPARE
PLC4-005	START/STOP EXHAUST FAN HTEF-4
PLC4-006	SPARE
PLC4-007	CLOSE EXHAUST FAN HTEF-4 INLET DAMPER
PLC4-008	CLOSE CRAWL SPACE INLET DAMPERS (ALL)
PLC4-009	ENERGIZE PURGE COMPLETE LIGHT
PLC4-010	ENABLE PIT CRAWL SPACE ELECTRICAL CIRCUITS
PLC4-011	SPARE
PLC4-012	SPARE

HTEF-8 LOGIC SCHEDULE PLC5

120 VOLT DISCRETE INPUTS	
ELEMENT NO.	DESCRIPTION
PLC5-01	COMPARTMENT 3,4,7,8 PURGE REQUEST
PLC5-02	CRAWL SPACE COMPARTMENT 3 & 7 INLET DAMPERS OPEN
PLC5-03	CRAWL SPACE COMPARTMENT 4 & 8 INLET DAMPERS OPEN
PLC5-04	COMPARTMENT 3,4,7,8 PURGE CANCELLED
PLC5-05	EXHAUST FAN HTEF-8 FAILURE
PLC5-06	COMPARTMENT 3,4,7,8 PURGE REQUIRED
PLC5-07	EXHAUST FAN HTEF-8 STARTED
PLC5-08	EXHAUST FAN HTEF-8 STOPPED
120 VOLT DISCRETE CONTACT OUTPUTS	
ELEMENT NO.	DESCRIPTION
PLC5-001	OPEN CRAWL SPACE COMPARTMENT 3 & 7 DAMPERS
PLC5-002	OPEN CRAWL SPACE COMPARTMENT 4 & 8 DAMPERS
PLC5-003	OPEN EXHAUST FAN HTEF-8 INLET DAMPER
PLC5-004	OPEN COMPARTMENT 3 DUCT DAMPER
PLC5-005	OPEN COMPARTMENT 4 DUCT DAMPER
PLC5-006	OPEN COMPARTMENT 7 DUCT DAMPER
PLC5-007	OPEN COMPARTMENT 8 DUCT DAMPER
PLC5-008	START/STOP EXHAUST FAN HTEF-8
PLC5-009	CLOSE CRAWL SPACE COMPARTMENT 3 & 7 DAMPERS
PLC5-010	CLOSE CRAWL SPACE COMPARTMENT 4 & 8 DAMPERS
PLC5-011	CLOSE EXHAUST FAN HTEF-8 INLET DAMPER
PLC5-012	CLOSE COMPARTMENT 3 DUCT DAMPER
PLC5-013	CLOSE COMPARTMENT 4 DUCT DAMPER
PLC5-014	CLOSE COMPARTMENT 7 DUCT DAMPER
PLC5-015	CLOSE COMPARTMENT 8 DUCT DAMPER
PLC5-016	ENERGIZE PURGE COMPLETE LIGHT
PLC5-017	ENABLE 1ST FLOOR CRAWL SPACE ELECTRICAL CIRCUITS
PLC5-018	ENABLE 2ND FLOOR CRAWL SPACE ELECTRICAL CIRCUITS
PLC5-019	SPARE
PLC5-020	SPARE

GENERAL NOTES:

1. FOR ITEM ABBREVIATIONS AND DESCRIPTIONS, SEE DWG. M4-1.
2. RESPECTIVE POWER CIRCUIT TO BE PROVIDED BY DIVISION 16.
3. CONTACTOR AND AUXILIARY CONTACT SHALL BE PROVIDED AS INTEGRAL PART OF VARIABLE SPEED DRIVE CONTROLLER.
4. REFER TO SPECIFICATION 15972 FOR DESCRIPTION OF MOTORIZED DAMPER ASSEMBLY.
5. AUTOMATIC MODE SHALL BE CONTROLLED BY THE PROGRAMMABLE LOGIC CONTROLLER.
6. LS02 AND LS03 ARE TYPICAL DESIGNATIONS FOR LIMIT SWITCHES TO BE PROVIDED INTEGRAL WITH DAMPER MOTOR ASSEMBLY.
7. 120 VOLT, 4-20 MA POSITION TRANSMITTER SHALL BE FURNISHED INTEGRAL WITH DAMPER MOTOR ASSEMBLY.

FOR OFFICIAL USE ONLY

RECORD DRAWING
DATE 06/08/98

EAD 05/25/98

DATE 07-31-97 ISSUE AS-BUILT, NO CORRECTIONS

ARCH. & ENGR. SEAL: STATE OF OHIO – CHRISTOPHER S. RAUCH – E-54727 – PROFESSIONAL ENGINEER

Knight Architects Engineers Planners, Inc.
549 West Randolph Street
Chicago, IL 60661
Established in 1945
A Lester B. Knight & Associates, Inc. Company
© Copyright 1994 Knight Architects Engineers Planners, Inc.

DEPARTMENT OF THE NAVY — NAVAL FACILITIES ENGINEERING COMMAND
SOUTHERN DIVISION
CHARLESTON, S.C.

DSGN KOWALIK DR KSIAZEK CHK RAUCH
SUPV RAUCH CH ENGR
SUBMITTED BY [signature] DATE 8-31-94
FIRM MEMBER TITLE
EIC [signature] BR HD [signature]
FPE DIR

NAVAL TRAINING CENTER — GREAT LAKES, ILLINOIS

DAMAGE CONTROL SCHOOL
FFT PLC1,2,3,4&5 LOGIC SCHEDULES AND LOGIC DESCRIPTIONS

APPROVED DATE
OFFICER IN CHARGE
APPROVED [signature] DATE 9/13/94
EFD FOR COMMANDER, NAVFAC

SIZE	CODE IDENT NO.	NAVFAC DRAWING NO.	DRAWING NO.
F	80091	5276577	M4-7

CONSTR CONTR NO. N62467-93-C-1143
SCALE NO SCALE
SPEC 06-93-1143 SHEET 163 OF

Date&time: 08/21/94 14:36:22 User: AFS Filename: P:\PAPER\JHPS2407

P: TTL-BLCK PS ins=0,0
P: TTL-KNGT PS ins=0,0
P: JHPA2407 PS ins=0,0
P: -JHGM2407 MS ins=0,0