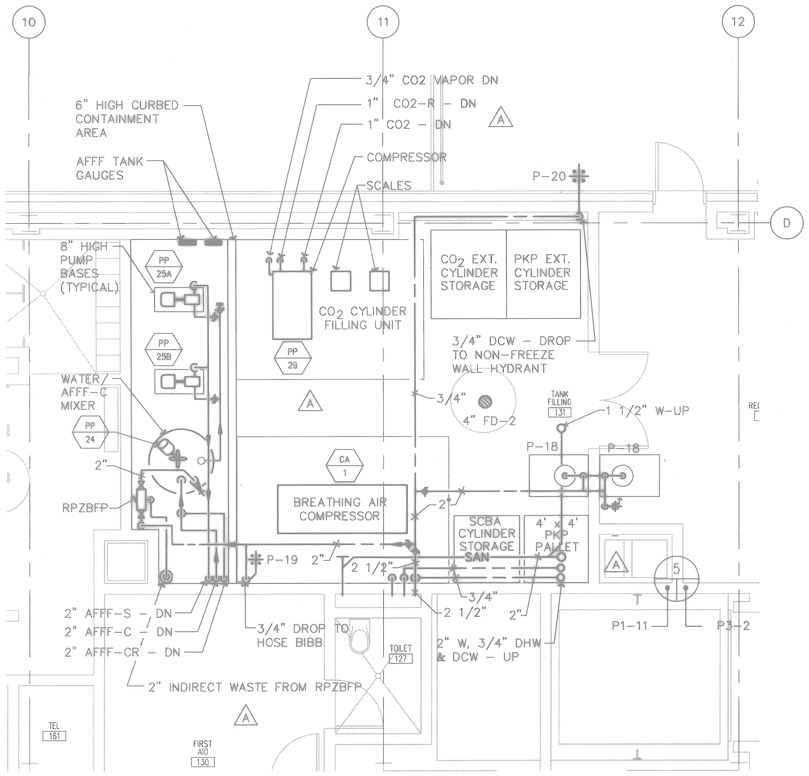

1 TANK FILLING ROOM PARTIAL PLAN
SCALE: 1/4"=1'-0"
P1-6 P1-11

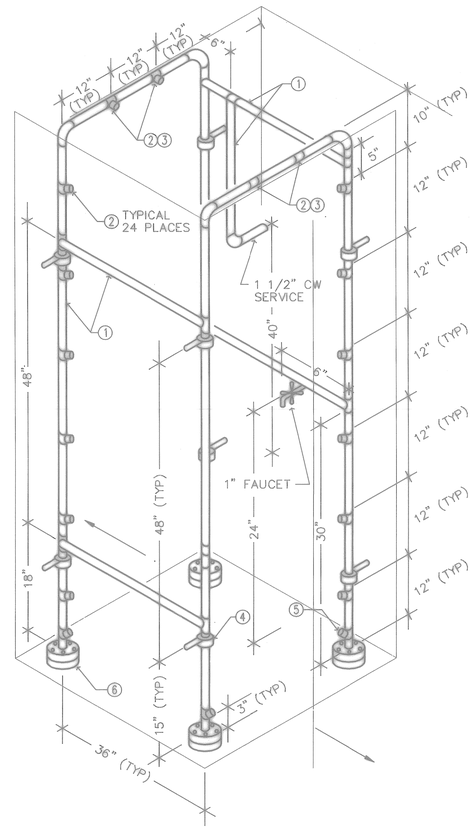

2 MULTI-NOZZLE SHOWER ASSEMBLY
SCALE: NONE
P1-10 P1-11

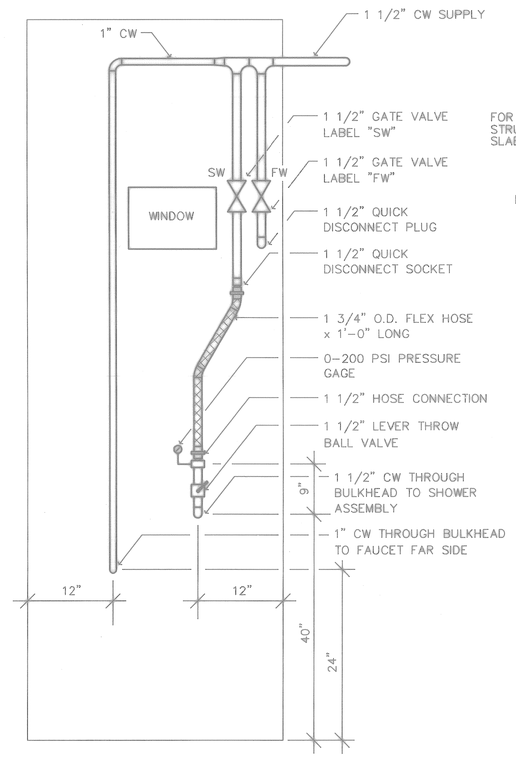

3 BULKHEAD ELEVATION
SCALE: NONE
P1-2 P1-3 P1-11

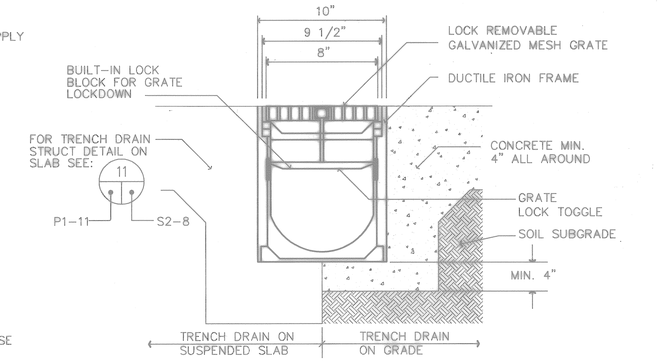

TYPE FD-3

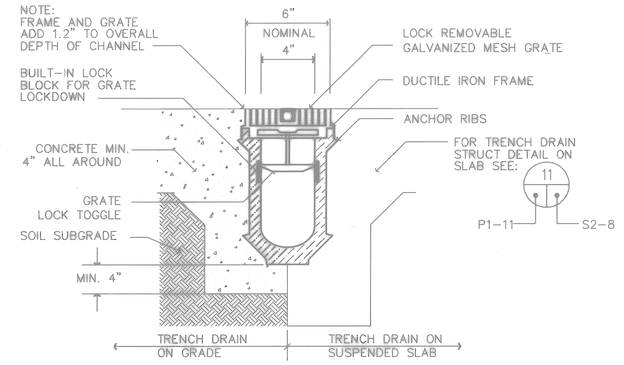

TYPE FD-4

4 TRENCH DRAIN DETAIL
SCALE: NONE
P1-2 P1-3 P1-11

NOTES:

1. FABRICATE FROM 1 1/2" COPPER TUBE, "TYPE L".
2. SQUARE SPRAY NOZZLE SPLIT EYELET CONNECTORS, FULL JET, WIDE ANGLE, 2 1/2 GPM @ 35 PSI, 28 REQUIRED. (DIRECT TO CENTER OF ASSEMBLY)
3. UPPER (TOP) NOZZLES TO DIRECT SPRAY DOWN 30° FROM HORIZONTAL. (TYPICAL 4 PLACES)
4. ADJUSTABLE SPLIT RING PIPE HANGER. (TYPICAL 8 PLACES)
5. 1/4" DRAIN PLUG TYPICAL 4 PLACES. (1 EACH LEG)
6. 1 1/2" FLAT FACE FLANGE & PAD WITH SEAL. (TYPICAL 4 PLACES)

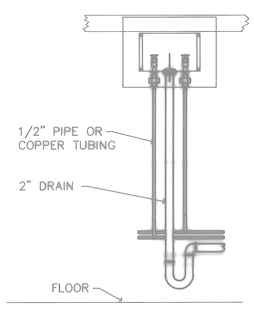

5 LAUNDRY SERVICE CONNECTION BOX DETAIL(P-21)
SCALE: NONE
P3-2

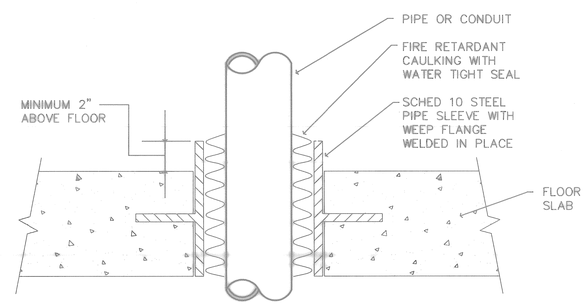

6 PIPE SLEEVE DETAIL
SCALE: NONE
P3-2

FOR OFFICIAL USE ONLY

RECORD DRAWING
DATE 06/08/98

DATE 07-31-97	ISSUE CORRECTED TO AS-BUILT	BY DJS	INITIAL

Knight Architects Engineers Planners, Inc.
549 West Randolph Street
Chicago, IL 60661
Established in 1946
A Lester B. Knight & Associates, Inc. Company
©Copyright 1994 Knight Architects Engineers Planners, Inc.

DEPARTMENT OF THE NAVY — NAVAL FACILITIES ENGINEERING COMMAND
SOUTHERN DIVISION
CHARLESTON, S.C.

NAVAL TRAINING CENTER — GREAT LAKES, ILLINOIS

DSGN CALDERR CASTELLONI RAUCH
SUPV RAUCH CH ENGR
SUBMITTED BY — DATE
FIRM MEMBER TITLE
DIC — DR NO.
PIPE — DIR
APPROVED — DATE
OFFICER IN CHARGE
APPROVED — DATE
EFD FOR COMMANDER, NAVFAC

ARCH. & ENGR. SEAL

DAMAGE CONTROL SCHOOL
PARTIAL PLANS AND DETAILS

SIZE	CODE IDENT NO.	NAVFAC DRAWING NO.	DRAWING NO.
F	80091	5276602	P1-11

CONSTR CONTR NO. N62467-93-C-1143
SCALE AS NOTED — SPEC 06-93-1143 — SHEET 188 OF

Date&time: 10/30/97 11:17:11 User: TWhite Filename: P:\PAPER\CHANGED\DJS\JPPSP111

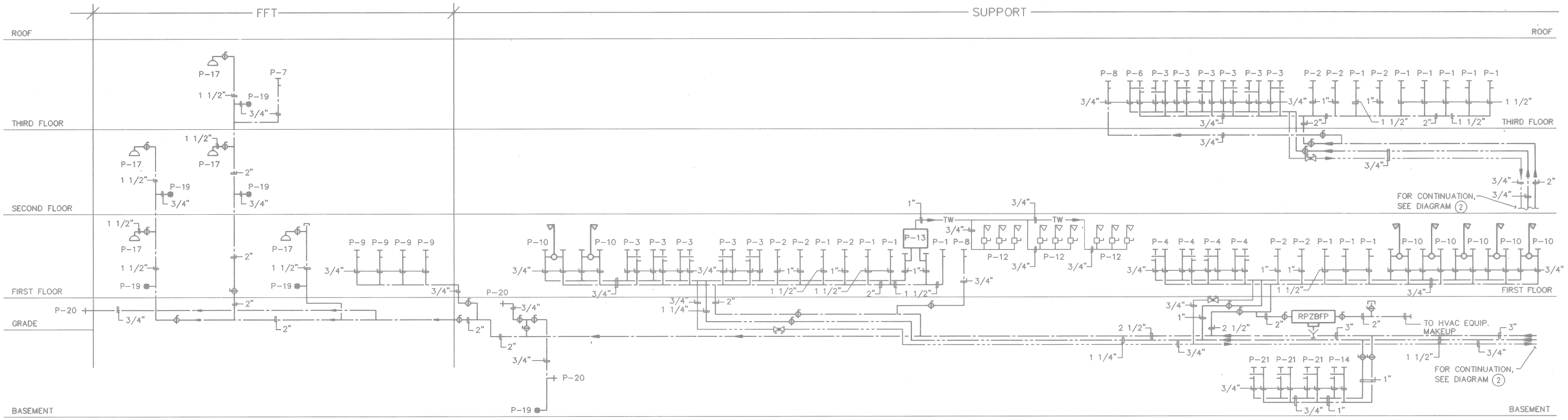

1 DOMESTIC WATER RISER DIAGRAM
SCALE: NONE

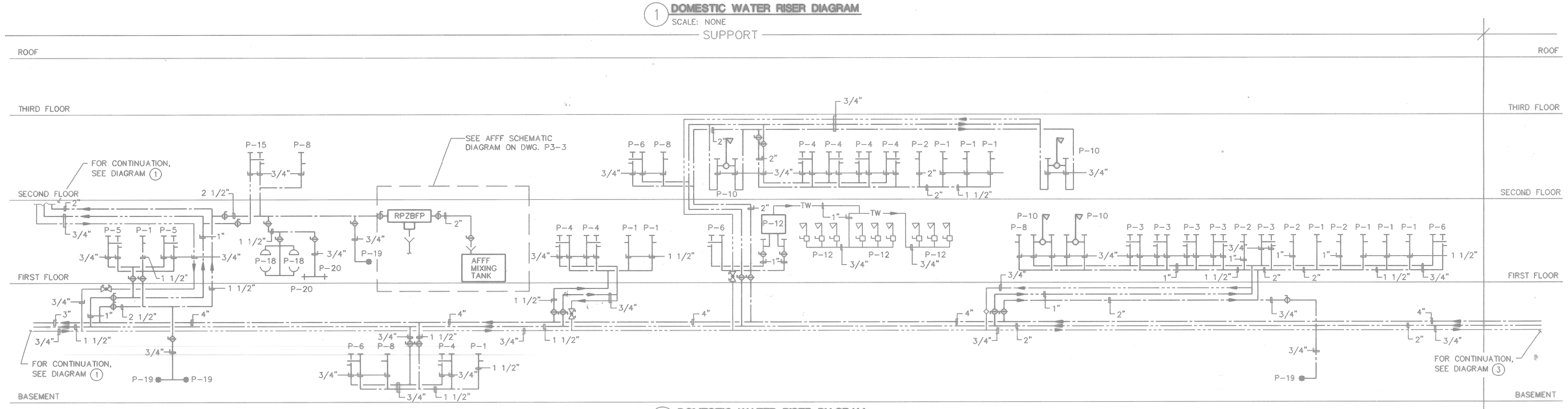

2 DOMESTIC WATER RISER DIAGRAM
SCALE: NONE

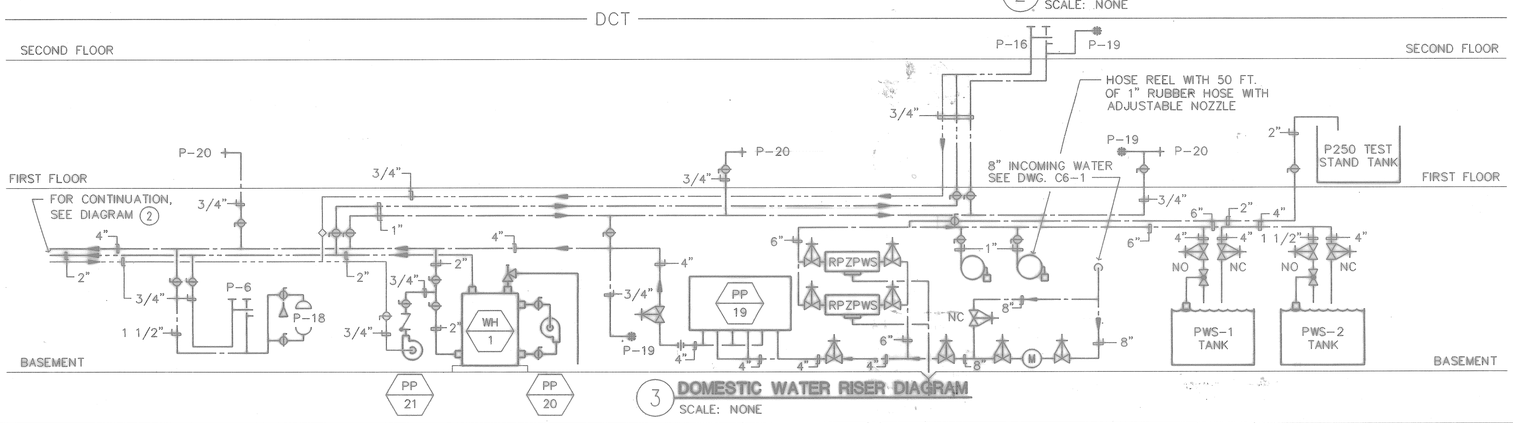

3 DOMESTIC WATER RISER DIAGRAM
SCALE: NONE

FOR OFFICIAL USE ONLY

RECORD DRAWING
DATE 06/08/98

DATE 07-31-97 BY AS-BUILT, NO CORRECTIONS AT BY

Knight Architects Engineers Planners, Inc.
549 West Randolph Street
Chicago, IL 60661
Established in 1892
Successor to Knight & Associates, Inc. Company
Copyright 1994 Knight Architects Engineers Planners, Inc.

DEPARTMENT OF THE NAVY — NAVAL FACILITIES ENGINEERING COMMAND
SOUTHERN DIVISION
CHARLESTON, S.C.

NAVAL TRAINING CENTER — GREAT LAKES, ILLINOIS

DAMAGE CONTROL SCHOOL PLUMBING RISER DIAGRAMS

DSGN CALDERR AFS CHK RAUCH
SUPV RAUCH CH ENGR
SUBMITTED BY DATE 8-21-97
TPN NUMBER/TAPE
EIC BR HD
FPE DIR
APPROVED DATE
OFFICER IN CHARGE
APPROVED DATE 9/12/97
CPD FOR COMMANDER, NAVFAC

SIZE	CODE IDENT NO.	NAVFAC DRAWING NO.	DRAWING NO.
F	80091	5276603	P2-1
SCALE NONE		CONSTR CONTR NO. N62467-93-C-1143	
		SPEC 06-93-1143	SHEET 129 OF [illegible]

STATE OF OHIO
CHRISTOPHER S. RAUCH
E-54207
REGISTERED PROFESSIONAL ENGINEER
ARCH. & ENGR. SEAL

P: TN-BLDX PS size=0.0
P: TN-UNDT PS size=0.0
P: JPRSP201 PS size=0.0
P: -PWMPRT MS size=0.0

Date&time: 08/30/94 10:32:02 User: MAC Filename: P:\PAPER\JPPSP201

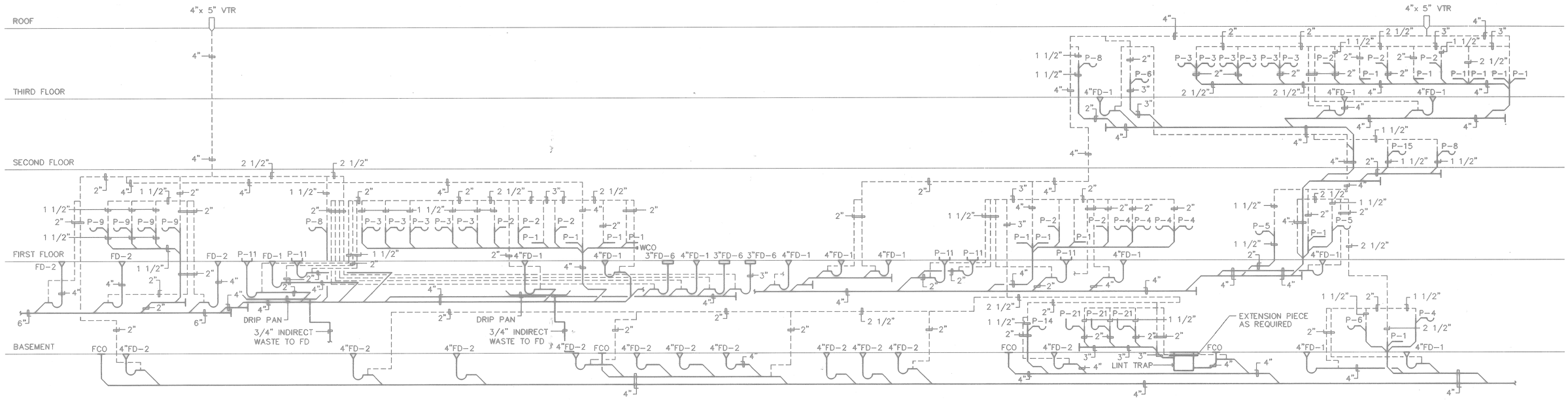

1 SANITARY WASTE AND VENT DIAGRAM
SCALE: NONE
P2-2 P2-2

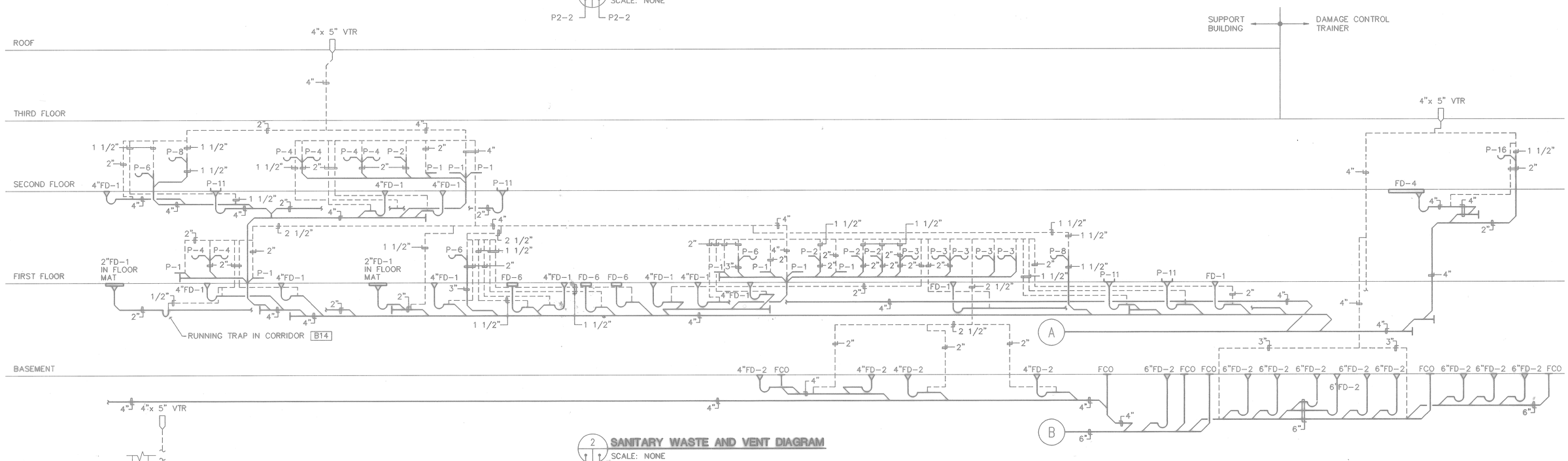

2 SANITARY WASTE AND VENT DIAGRAM
SCALE: NONE
P2-2 P2-2

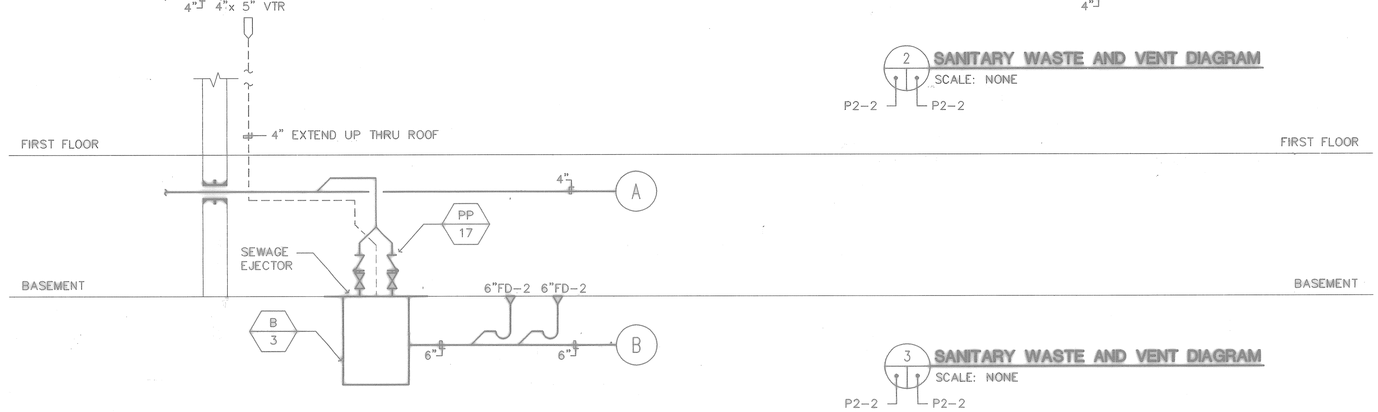

3 SANITARY WASTE AND VENT DIAGRAM
SCALE: NONE
P2-2 P2-2

FOR OFFICIAL USE ONLY

RECORD DRAWING
DATE 06/08/98

DATE 97-31-87 STATUS AS-BUILT, NO CORRECTIONS

Knight Architects Engineers Planners, Inc.
230 West Monroe Street
Chicago, IL 60606
Formed in 1923
A Legal Successor to Knight & Associates, Inc. Company
©Copyright 1997 Knight Architects Engineers Planners, Inc.

DSGN CALDER DR AFS CHK RAUCH
SUPV RAUCH CH ENGR
SUBMITTED BY DATE 8-31-94
NAVAL MEMBER, STATE
EIC DR HO
FPE DIR

STATE OF OHIO CHRISTOPHER G. RAUCH E-54727 PROFESSIONAL ENGINEER
ARCH. & ENGR. SEAL

APPROVED DATE
OFFICER IN CHARGE
APPROVED DATE 9/12/94
EFD FOR COMMANDER, NAVFAC

DEPARTMENT OF THE NAVY NAVAL FACILITIES ENGINEERING COMMAND
SOUTHERN DIVISION
CHARLESTON, S.C.

NAVAL TRAINING CENTER GREAT LAKES, ILLINOIS

DAMAGE CONTROL SCHOOL PLUMBING RISER DIAGRAM

SIZE	CODE IDENT NO.	NAVFAC DRAWING NO.	DRAWING NO.
F	80091	5276604	P2-2
		CONSTR CONTR NO. N62467-93-C-1143	
SCALE NONE		SPEC 06-93-1143	SHEET 190 OF

P: TB-BLOX PS	Wpen=0.0		
P: TB-NOQT PS	Wpen=0.0		
P: JPPSP202 PS	Wpen=0.0		
P: JPNWPRZ MS	Wpen=0.0		

Date&time: 08/30/94 10:33:32 User: MAC Filename: P:\PAPER\JPPSP202

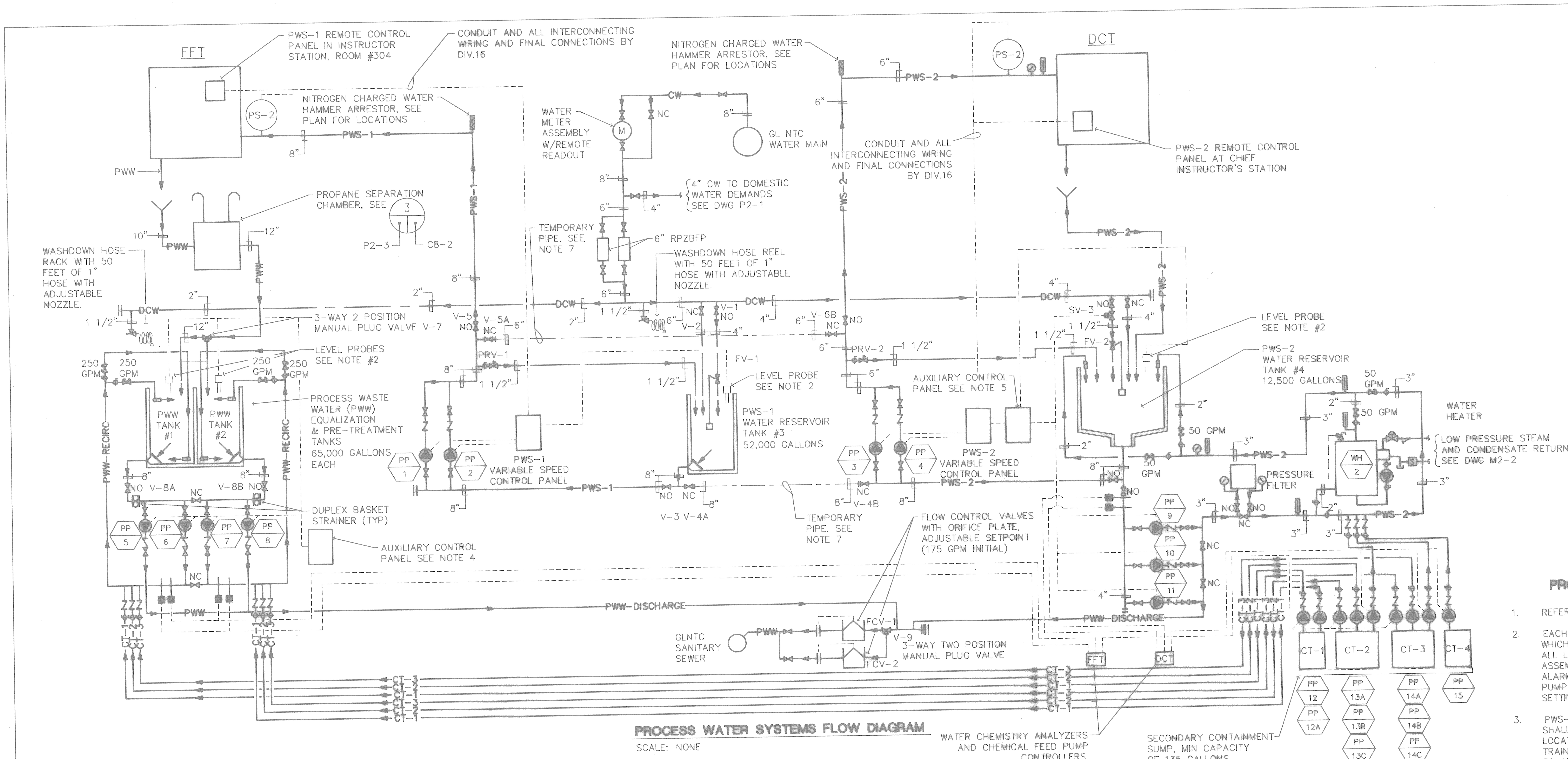

PROCESS WATER SYSTEMS FLOW DIAGRAM

SCALE: NONE

LEGEND

FFT	FIRE FIGHTER TRAINER
DCT	DAMAGE CONTROL TRAINER
CW	CITY WATER
DCW	DOMESTIC COLD WATER
PWS-1	PROCESS WATER SUPPLY #1 (FFT)
PWS-2	PROCESS WATER SUPPLY #2 (DCT)
PWW	PROCESS WASTE WATER
CT-1	CHEMICAL TREATMENT 1
CT-2	CHEMICAL TREATMENT #2
CT-3	CHEMICAL TREATMENT #3
CT-4	CHEMICAL TREATMENT #4
	DUPLEX BASKET STRAINER
	GATE VALVE
	BALL VALVE
	BALANCING VALVE ASSEMBLY
	CHECK VALVE
	SOLENOID VALVE
	PUMP
RPZBFP	REDUCED PRESSURE ZONE BACKFLOW PREVENTER
	FLOAT OPERATED VALVE
	PRESSURE GAUGE
	THERMOMETER OR TEMPERATURE GAUGE
-----	ELECTRICAL CONTROL WIRING
———	TEMPORARY PIPING
	WATER HAMMER ARRESTOR

PROCESS WATER SYSTEMS - GENERAL NOTES

1. REFER TO SPECIFICATION SECTION 15450 – PROCESS WATER SYSTEMS.
2. EACH TANK SHALL BE EQUIPPED WITH AN ULTRASONIC LEVEL PROBE WHICH SHALL PROVIDE LEVEL INDICATIONS AND ALARM SIGNALS. ALL LEVEL SETTINGS SHALL BE FIELD ADJUSTABLE. EACH PROBE ASSEMBLY SHALL BE CAPABLE OF PROVIDING HIGH AND LOW LEVEL ALARM SIGNALS. LOW LEVEL SIGNAL SHALL BE CAPABLE OF STOPPING PUMP OPERATIONS TO PREVENT DAMAGE TO THE PUMPS. ALL LEVEL SETTINGS SHALL BE FIELD VERIFIED.
3. PWS-1 AND PWS-2 VARIABLE SPEED CONTROLLER SYSTEMS SHALL BE PROVIDED WITH A REMOTE CONTROL PANEL TO BE LOCATED AT THE INSTRUCTORS' STATION IN THE FFT AND THE DCT TRAINING AREAS, REMOTE PANELS ARE TO ALLOW THE INSTRUCTORS TO ADJUST PRESSURE FLOW SETTINGS, START AND STOP PUMPS, AND MONITOR SYSTEMS OPERATIONS.
4. PWS-1 SYSTEM SERVING FFT SHALL BE PROVIDED WITH AN AUXILIARY CONTROL PANEL FOR THE PWW SYSTEM LOCATED ADJACENT TO PWW PUMPS. AUXILIARY CONTROL PANEL SHALL CONTAIN START/STOP CONTROLS WITH RUNNING LIGHTS FOR PUMPS PP-5, PP-6, PP-7 & PP-8; AND LEVEL PROBE STATUS LIGHTS FOR HIGH AND LOW LEVELS IN PWW TANKS NO.1 AND 2
5. PWS-2 SYSTEM SERVING DCT SHALL BE PROVIDED WITH AN AUXILIARY CONTROL PANEL LOCATED ADJACENT TO PWS-2 VARIABLE SPEED CONTROLLERS. AUXILIARY CONTROL PANEL SHALL CONTAIN START/STOP CONTROLS WITH RUNNING LIGHTS FOR PUMPS PP-9, PP-10 & PP-11 AND LEVEL PROBE STATUS LIGHTS FOR HIGH AND LOW LEVELS IN PWS-2 RESERVOIR TANK NO.4.
6. ALL ELECTRICAL DEVICES, INCLUDING CONTROL PANELS, LOCATED IN PROCESS & WASTE WATER TANK ROOM NO. B16 SHALL BE RATED AS NEMA 4 OR EQUIVALENT.
7. "TEMPORARY PIPES" SHALL BE MADE UP OF STEEL PIPE AND FLANGED ENDS PER SPECIFICATION REQUIRMENTS FOR PWS SYSTEMS TO FIT BETWEEN VALVES V-4A AND V-4BAND ANOTHER TO FIT BETWEEN VALVES V-6A AND V-6B. IN THE EVENT OF THE FAILURE OF EITHER PWS-1 OR PWS -2 PUMPING SYSTEMS THE BLIND FLANGES ON VALVES V-4A, V-4B, V-6A, AND V-6B CAN BE REMOVED, THE "TEMPORARY PIPES" CAN BE INSTALLED AND THE REMAINING PUMP SET CAN PROVIDE SERVICE TO BOTH FFT AND DCT TRAINING DEMANDS. THE "TEMPORARY PIPES" SHALL BE STORED ON WALL HOOKS IN THE PUMP ROOM WHEN NOT IN USE.

PROCESS WATER SYSTEMS - SEQUENCE OF OPERATIONS

FIRE FIGHTER TRAINER (FFT)

PROCESS WATER SUPPLY SYSTEM NO. 1 (PWS-1)

1. TO BEGIN INITIAL OPERATIONS, ALL VALVES SHALL BE VERIFIED VISUALLY TO BE IN THEIR DESIGNATED POSITIONS, NORMALLY OPEN (NO) OR NORMALLY CLOSED (NC).
2. VALVE V-1 SHALL BE OPEN TO ALLOW FLOAT VALVE FV-1 TO FILL PWS-1 RESERVOIR. VALVE V-2 IS A NORMALLY CLOSED MANUAL BYPASS. VALVE V-3 SHALL BE OPEN TO ALLOW FLOW TO PWS-1 SUPPLY PUMPS PP/1 AND PP/2.
3. PRIOR ~~TO THE START OF A~~ TRAINING EXERCISE, INSTRUCTOR SHALL VERIFY PWS-1 RESERVOIR TO BE FILLED, MANUALLY SELECT A POSITION FOR THE PWW VALVE V-7 TO DIRECT THE CURRENT DAY'S TRAINING EXERCISE PWW TO AN EMPTY TANK, AND SHALL START PWS-1 SUPPLY PUMPS PP/1 AND PP/2. VARIABLE SPEED CONTROLLER SHALL SOFT START THE LEAD PUMP AND ADJUST ITS SPEED IN ACCORDANCE WITH THE SET POINT(ADJUSTABLE) OF PRESSURE SENSOR PS-1 IN THE FFT. IN CASE OF A "DEAD-HEAD" (NO FLOW) CONDITION, PRV-1 IS TO BE SET FOR 10% LESS PRESSURE THAN THE SHUT-OFF HEAD OF THE PUMP TO BYPASS WATER TO THE PWS-1 RESERVOIR TO PROVIDE ADEQUATE COOLING FOR THE PUMP. UPON ACTUAL TRAINING DEMAND IN THE FFT PRV-1 WILL AUTOMATICALLY CLOSE ALLOWING FULL FLOW DELIVERY TO THE TRAINING EXERCISE. AS TRAINING DEMAND INCREASES THE VARIABLE SPEED CONTROLLER WILL SOFT START THE LAG PUMP AND MODULATE THE SPEED OF BOTH PUMPS TO SATISFY DEMAND. AS SYSTEM DEMAND DECREASES, THE VARIABLE SPEED CONTROLLER SHALL STOP THE LAG PUMP AND MODULATE THE SPEED OF THE LEAD PUMP FOR THE REMAINING DEMAND. AT THE CLOSE OF THE TRAINING DAY, INSTRUCTOR SHALL STOP PWS-1 SUPPLY PUMP SYSTEM.
4. ALLOWING A REASONABLE TIME FOR COMPLETE DRAINDOWN OF THE PWW SYSTEM FROM THE FFT, (TIME TO BE VERIFIED IN ACTUAL OPERATIONS), INSTRUCTOR SHALL VERIFY WHICH PWW EQUALIZATION TANK HAS COLLECTED THE DAY'S WASTE AND START THE CIRCULATION PUMP FOR THAT TANK, (PP/6 FOR PWW TANK NO. 1 OR PP/7 FOR PWW TANK NO. 2). PWW SHALL BE AUTOMATICALLY SAMPLED, ANALYZED AND THE PROPER CHEMICAL TREATMENT INITIATED BY STARTING CHEMICAL FEED PUMPS AS REQUIRED.

PUMP PP/12	DE-FOAMING ADDITIVE
PUMP PP/13A	pH ADJUSTER (+)
PUMP PP/14A	pH ADJUSTER (–)

5. TIME REQUIRED FOR PRE-TREATMENT OF PWW IS TO BE VERIFIED IN ACTUAL OPERATIONS. AFTER AUTOMATIC SAMPLE AND ANALYSIS INDICATES THAT PRE-TREATMENT HAS BEEN COMPLETED, THE CIRCULATION PUMP AND ALL OPERATING CHEMICAL TREATMENT PUMPS SHALL BE STOPPED AND THE PWW DISCHARGE PUMP (PP/5 FOR PWW TANK NO. 1 OR PP/8 FOR PWW TANK NO. 2) SHALL BE STARTED. PWW DISCHARGE TO THE SANITARY SEWER SHALL BE ROUTED THROUGH THE FLOW CONTROL VALVE FCV-1 WHICH WILL LIMIT THE EFFLUENT FLOW TO A SET QUANTITY IN ACCORDANCE WITH THE SEWER PERMITTING REQUIREMENTS. FCV-1 SHALL BE FIELD ADJUSTABLE, INITIAL SET POINT SHALL BE 175 GPM. THE LEVEL PROBE SHALL STOP THE DISCHARGE PUMP UPON REACHING THE LOW LEVEL SET POINT.

DAMAGE CONTROL TRAINER (DCT)

PROCESS WATER SUPPLY SYSTEM NO. 2 (PWS-2)

1. TO BEGIN INITIAL OPERATIONS, ALL VALVES SHALL BE VERIFIED VISUALLY TO BE IN THEIR DESIGNATED POSITIONS, NORMALLY OPEN (NO) OR NORMALLY CLOSED (NC).
2. VALVE V-8 SHALL BE OPEN TO ALLOW FLOAT VALVE FV-2 TO MAINTAIN WATER LEVEL IN PWS-2 RESERVOIR. VALVE V-9 IS A NORMALLY CLOSED MANUAL FILL VALVE FOR INITIAL FILL AND REFILL OPERATIONS ONLY. VALVE V-10A SHALL BE OPEN TO ALLOW FLOW TO PWS-2 SUPPLY PUMPS PP/3 AND PP/4.
3. PRIOR TO THE START OF A TRAINING EXERCISE, INSTRUCTOR SHALL VERIFY PWS-2 RESERVOIR TO BE FILLED, AND SHALL START PWS-2 SUPPLY PUMPS PP/3 AND PP/4. VARIABLE SPEED CONTROLLER SHALL SOFT START THE LEAD PUMP AND ADJUST ITS SPEED IN ACCORDANCE WITH THE SET POINT(ADJUSTABLE) OF PRESSURE SENSOR PS-2 IN THE DCT. IN CASE OF A "DEAD-HEAD" (NO FLOW) CONDITION, PRV-2 IS TO BE SET FOR 10% LESS PRESSURE THAN THE SHUT-OFF HEAD OF THE PUMP TO BYPASS WATER TO THE PWS-2 RESERVOIR TO PROVIDE ADEQUATE COOLING FOR THE PUMP. UPON ACTUAL TRAINING DEMAND IN THE DCT PRV-2 WILL AUTOMATICALLY CLOSE ALLOWING FULL FLOW DELIVERY TO THE EXERCISE. AS TRAINING DEMAND INCREASES, THE VARIABLE SPEED CONTROLLER WILL SOFT START THE LAG PUMP AND MODULATE THE SPEED OF BOTH PUMPS TO SATISFY DEMAND. AS SYSTEM DEMAND DECREASES, THE VARIABLE SPEED CONTROLLER SHALL STOP THE LAG PUMP AND MODULATE THE SPEED OF THE LEAD PUMP FOR THE REMAINING DEMAND. AT THE CLOSE OF THE TRAINING DAY, THE INSTRUCTOR SHALL STOP THE PWS-2 SUPPLY PUMP SYSTEM.
4. PWS-2 VARIABLE SPEED CONTROLLER SHALL BE EQUIPPED WITH "LOCK-OUT" CIRCUITRY THAT WILL FUNCTION TO PREVENT THE OPERATION OF THE PWS-2 CIRCULATING AND DISCHARGE PUMPS PP/9, PP/10, PP/11, CHEMICAL TREATMENT PUMPS PP/13B, PP/14B, PP/15, AND CLOSE SOLENOID VALVE SV-1 AND STEAM CONTROL VALVE TCV-2 WHILE PWS-2 SUPPLY PUMPS PP/3 AND PP/4 ARE RUNNING. PWS-2 WATER HEATER WH/2 CIRCULATING PUMP PP/31 SHALL NOT BE LOCKED OUT AND SHALL RUN CONTINUOUSLY.
5. ONCE PWS-2 SUPPLY SYSTEM PUMPS PP/3 AND PP/4 HAVE BEEN SHUT-DOWN THE LOCK-OUT CIRCUITRY SHALL BE DE-ENERGIZED, ENABLING INSTRUCTOR TO MANUALLY START PWS-2 CIRCULATING PUMP PP/9. STEAM TEMPERATURE CONTROL VALVE TCV-2 AND SOLENOID VALVE SV-1 SHALL BE AUTOMATICALLY ENERGIZED. PUMP PP/9 SHALL CIRCULATE THE CONTENTS OF PWS-2 RESERVOIR THROUGH THE PRESSURE FILTER, THE WATER HEATER (TO MAINTAIN A TEMPERATURE OF 75 DEGREES F) AND ACROSS THE CHEMICAL TREATMENT SENSORS FOR CONSTANT MONITORING OF THE CHLORINE CONTENT AND pH LEVELS. AUTOMATIC SAMPLING AND ANALYSIS SHALL CONTROL THE CHEMICAL TREATMENT PUMPS AS REQUIRED.

PUMP PP/13B	pH ADJUSTER (+)
PUMP PP/14B	pH ADJUSTER (–)
PUMP PP/15	HYPO-CHLORINE SOLUTION

6. PERIODICALLY, AS DETERMINED BY ACTUAL OPERATION, THE PWS-2 RESERVOIR SHALL BE DRAINED AND CLEANED. PWS-2 SUPPLY SYSTEM PUMPS PP/3 AND PP/4, CIRCULATING PUMP PP/9, CHEMICAL TREATMENT PUMPS PP/13B, PP/14B, AND PP/15, CIRCULATING PUMP PP/31, TEMPERATURE CONTROL VALVE TCV-2 AND SOLENOID VALVE SV-1 SHALL BE SHUT-DOWN. PWW DISCHARGE PUMP PP/11 SHALL BE STARTED TO DISCHARGE THE PWW TO THE SANITARY SEWER. PWW DISCHARGE IS ROUTED THROUGH THE FLOW CONTROL VALVE FCV-1 WHICH WILL LIMIT THE EFFLUENT FLOW TO A SET QUANTITY IN ACCORDANCE WITH THE SEWER PERMITTING REQUIREMENTS. FCV-1 SHALL BE FIELD ADJUSTABLE, INITIAL SET POINT SHALL BE 175 GPM.

   PWW DISCHARGE FROM PWS-1 AND PWS-2 SYSTEMS ARE NOT TO OCCUR SIMULTANEOUSLY. IF THAT SHOULD OCCUR FLOW CONTROL VALVE FCV-1 WILL LIMIT THE COMBINED EFFLUENT FLOW TO THE MAXIMUM OF 175 GPM OR ITS CURRENT SET POINT.
7. AFTER PWS-2 RESERVOIR HAS BEEN DRAINED AND CLEANED IT SHALL BE REFILLED AND THE COMPLETE CIRCULATION SYSTEM RESTARTED TO STABILIZE THE CHLORINE AND pH LEVELS OF THE WATER, AND TO MAINTAIN A TEMPERATURE OF 75 DEGREES F.
8. PERIODICALLY, AS DETERMINED BY PRESSURE SENSOR SUPPLIED AS A PART OF THE FILTER PACKAGE, THE FILTER ASSEMBLY SHALL AUTOMATICALLY BACKWASH. BACKWASH FLOW SHALL BE DIRECTED INTO THE SANITARY WASTE SYSTEM. FILTER BACKWASH CYCLE IS TIME CONTROLLED AND WILL AUTOMATICALLY RESET WHEN COMPLETE.

⚠ AFFECTS ENTIRE SHEET

ARCH. & ENGR. SEAL

FOR OFFICIAL USE ONLY

RECORD DRAWING
DATE 06/08/98

DBD 05/28/98

⚠ DATE 07-31-97 ISSUE CORRECTED TO AS-BUILT BY DJS INITIAL W.M.W.

Knight Architects Engineers Planners, Inc.
549 West Randolph Street
Chicago, IL 60661
Established in 1945
A Lester B. Knight & Associates, Inc. Company
© Copyright 1994 Knight Architects Engineers Planners, Inc.

DSGN CALDER DR CASTELL CHK RAUCH
SUPV RAUCH CH ENGR
SUBMITTED BY ____ DATE ____
FIRM MEMBER TITLE
EIC ____ BR HD ____
FPE ____ DIR ____
APPROVED ____ DATE ____
OFFICER IN CHARGE
APPROVED ____ DATE ____
EFD FOR COMMANDER, NAVFAC

DEPARTMENT OF THE NAVY — NAVAL FACILITIES ENGINEERING COMMAND
SOUTHERN DIVISION
CHARLESTON, S.C.

NAVAL TRAINING CENTER — GREAT LAKES, ILLINOIS

DAMAGE CONTROL SCHOOL PROCESS WATER DIAGRAM

SIZE	CODE IDENT NO.	NAVFAC DRAWING NO.	DRAWING NO.
F	80091	5276605	P2-3

CONSTR CONTR NO. N62467-93-C-1143
SCALE NONE
SPEC 06-93-1143
SHEET 191 OF

Date&time: 10/30/97 11:19:13 User: TWhite Filename: P:\PAPER\CHANGED\DJS\JPPSP203

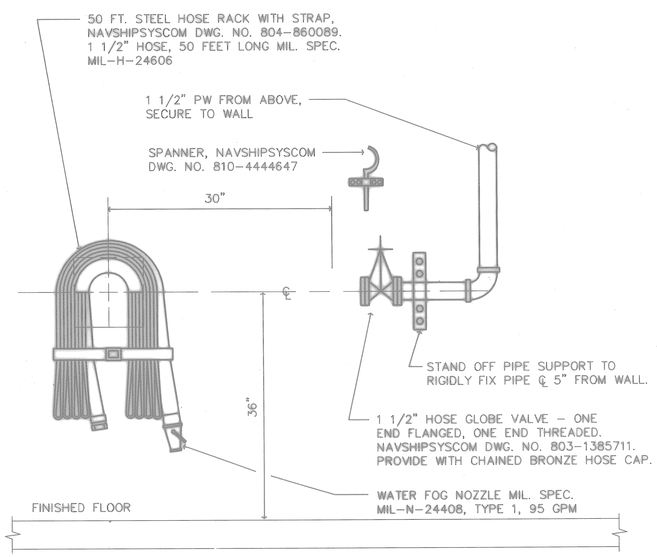

1 **HOSE STATION HS-1 DETAIL**
SCALE: NONE
P1-2 P1-3 P3-1

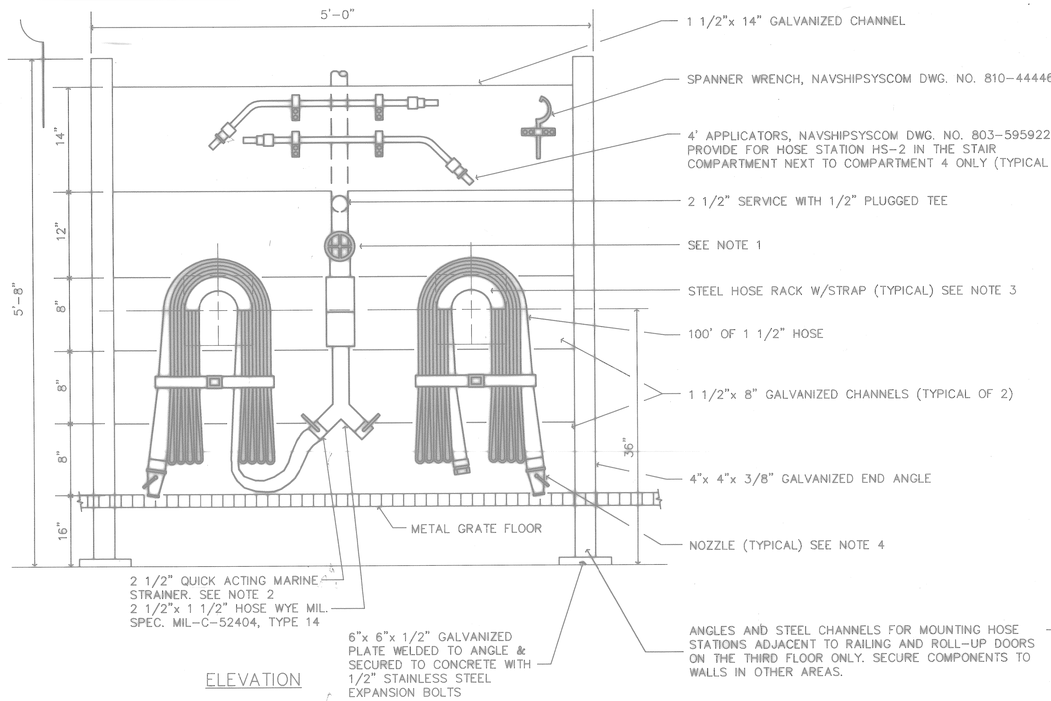

ELEVATION

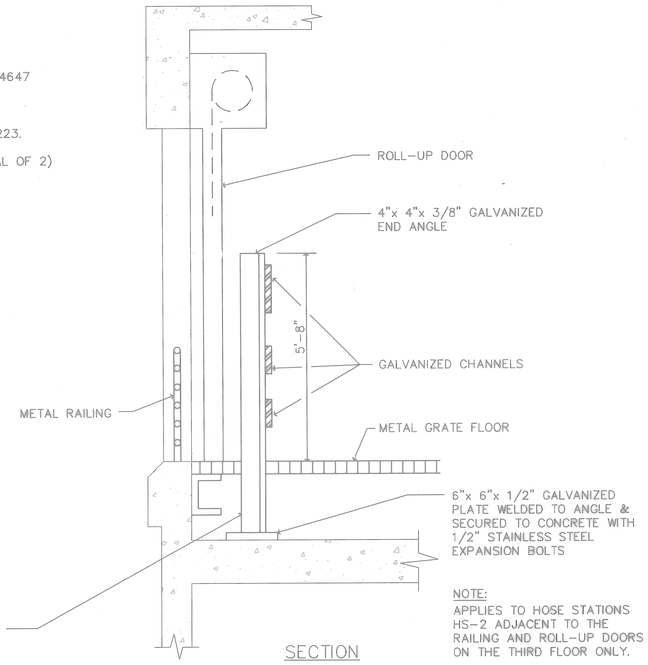

SECTION

NOTE:
APPLIES TO HOSE STATIONS HS-2 ADJACENT TO THE RAILING AND ROLL-UP DOORS ON THE THIRD FLOOR ONLY.

2 **HOSE STATION HS-2 DETAIL**
SCALE: NONE
P1-2 P1-3 P3-1

NOTES:

1. 2 1/2" HOSE ANGLE VALVE WITH ONE END FLANGED AND THE OTHER END THREADED, NAVSHIPSYSCOM DWG. NO. 803-1385712. PROVIDE WITH CHAINED BRONZE HOSE CAPS.
2. 2 1/2" MARINE STRAINER AND VALVE WITH CONNECTION COUPLING ON ONE END AND THREADED CONNECTION ON THE OTHER END. PROVIDE BRONZE END CAPS FOR THREADED ENDS. NAVSHIPSYSCOM DWG. NO. 803-5959217.
3. 100' STEEL HOSE RACK WITH STRAP, NAVSHIPSYSCOM DWG. NO. 804-860089. 1 1/2" HOSE, 100' LONG MIL. SPEC. MIL-H-24606.
4. WATER FOG NOZZLE MIL. SPEC. MIL-N-24408, TYPE 1, 95 GPM OR NAVSHIPSYSCOM DWG. NO. 803-1385834 FOR HOSE STATION HS-2 IN THE STAIR COMPARTMENT NEXT TO COMPARTMENT 4 ONLY.

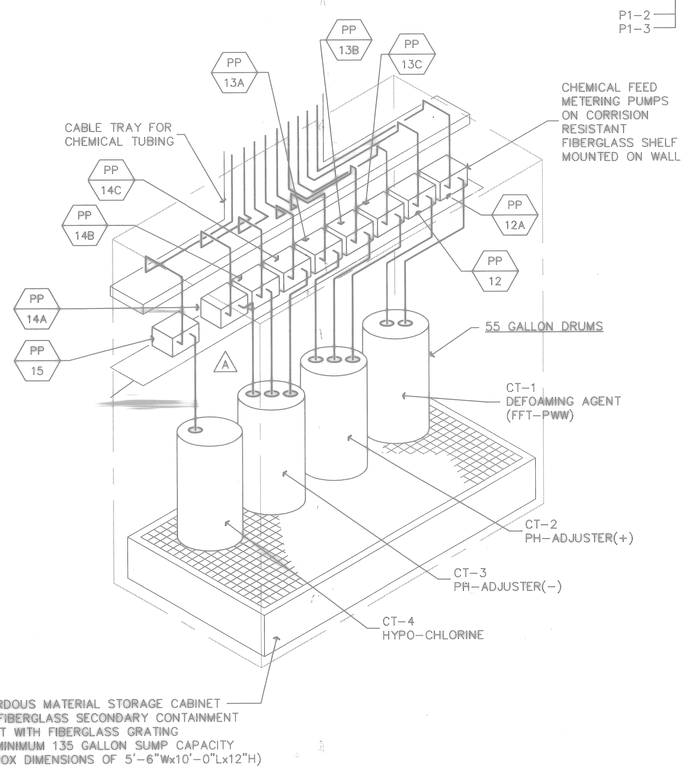

5 **CHEMICAL TREATMENT SYSTEM**
SCALE: NONE
P1-9 P3-1

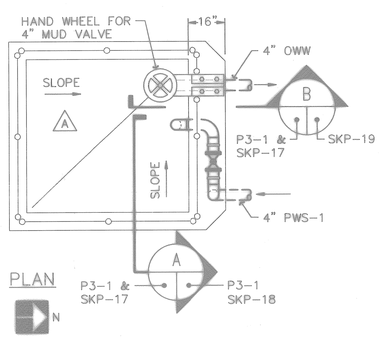

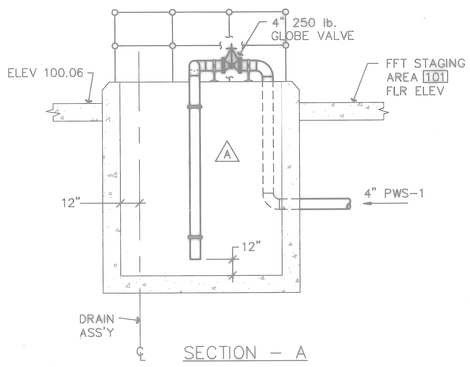

SECTION - A

NOTE
SEE STRUCTURAL DETAIL NO. S2-2 FOR REINFORCING REQUIREMENTS, AND CONSTRUCTION DETAILS.

6 **P-250 DEMONSTRATION SUMP**
SCALE: NONE
P1-2 P1-3 P3-1

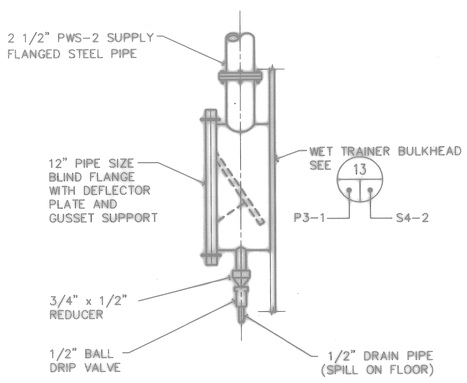

4 **BUCKET PATCH DETAIL**
SCALE: NONE
P1-10 P3-1

FOR OFFICIAL USE ONLY

RECORD DRAWING
DATE 06/08/98

DATE 07-31-97 ISSUE CORRECTED TO AS-BUILT BY DJS INITIAL

Knight Architects Engineers Planners, Inc.
540 West Madison Street
Chicago, IL 60661
Telephone IL 1840
Knight Architects & Associates, Inc. Company
Copyright 1997 Knight Architects Engineers Planners, Inc.

DEPARTMENT OF THE NAVY
NAVAL FACILITIES ENGINEERING COMMAND
SOUTHERN DIVISION
CHARLESTON, S.C.

DSGN CALDER CHK CASTELLI CHK RAUCH
SUPV RAUCH CH ENGR
SUBMITTED BY DATE
FIRM MEMBER TITLE
EIC BR HD
FPE DIR
APPROVED DATE
OFFICER IN CHARGE
APPROVED DATE
EFD FOR COMMANDER, NAVFAC

NAVAL TRAINING CENTER GREAT LAKES, ILLINOIS

DAMAGE CONTROL SCHOOL
PIPING DETAILS

SIZE	CODE IDENT NO.	NAVFAC DRAWING NO.	DRAWING NO.
F	80091	5276606	P3-1
SCALE NONE		CONSTR CONTR NO. N62467-93-C-1143	
		SPEC 08-93-1143	SHEET 192

ARCH. & ENGR. SEAL

Date&time: 10/30/97 11:21:60 User: TWhite Filename: P:\PAPER\CHANGED\DJS\JPPSP301

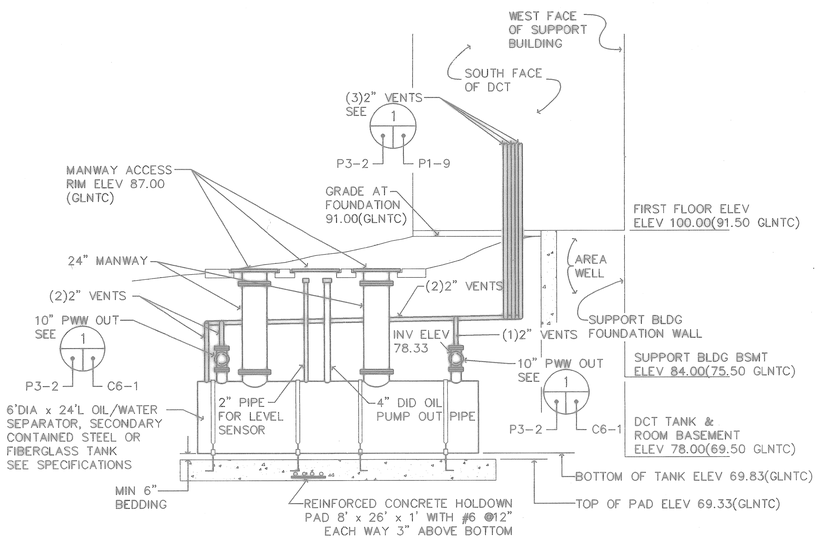

1 OIL/WATER SEPARATOR DETAIL

SCALE: NONE

P_-_ P3-2

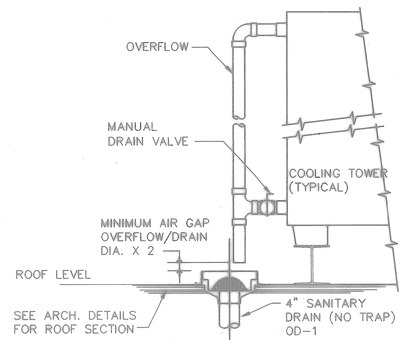

2 COOLING TOWER OVERFLOW DRAIN DETAIL

SCALE: NONE

P1-7 P3-2

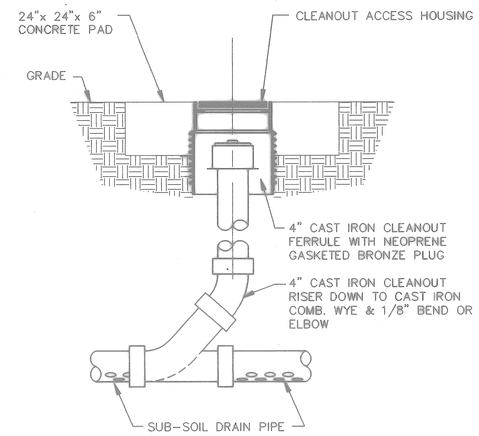

3 YARD CLEANOUT DETAIL

SCALE: NONE

P1-1 P3-2
P1-4

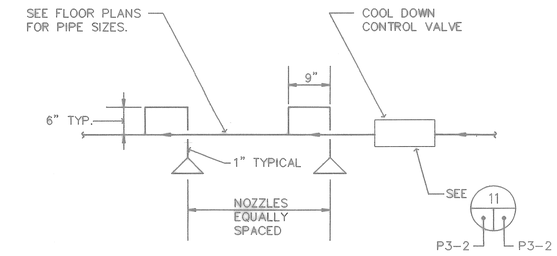

NOTES

1. SEE FLOOR PLANS FOR AMOUNT OF NOZZLES AND APPROXIMATE LOCATIONS. FINAL LOCATION OF SPRAY NOZZLES AHALL BE FIELD DETERMINED BY THE CONTRACTING OFFICER. THE DRAWINGS SHOW ONLY APPROXIMATE LOCATIONS.

2. THE SPRAY NOZZLES SHALL BE THE OPEN TYPE. STAINLESS STEEL (316SS) WITH 125° SPRAY PATTERNS AND 3/8" ORIFICE. INSTALL THE COOLING SPRAY NOZZLES IN THE PENDANT POSITION. COOLING SPRAY NOZZLES LOCATED NEAR WALLS SHALL BE INSTALLED 30° DOWN FROM THE HORIZONTAL THE SPRAY NOZZLES SHALL DRIP CONSTANTLY FOR COOLING PURPOSES DURING FIRE TRAINING.

4 COOL DOWN SPRAY NOZZLES & PIPING DETAIL

SCALE: NONE

P1-2 P3-2
P1-3

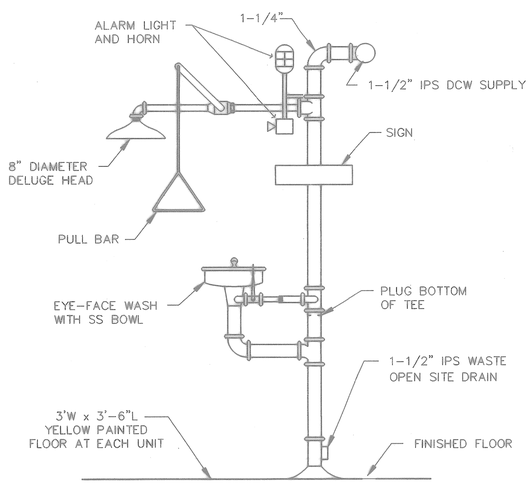

5 EMERGENCY SHOWER AND EYEWASH DETAIL

SCALE: NONE

P1-2 P3-2
P1-3

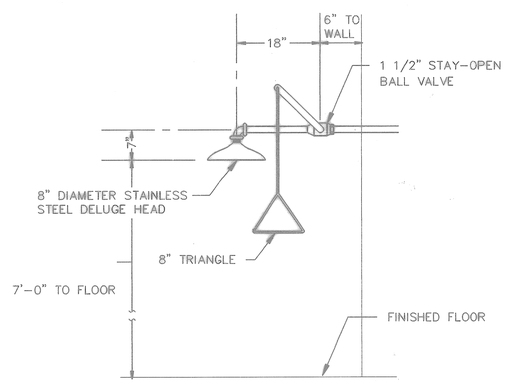

6 EMERGENCY SHOWER (COOL DOWN) DETAIL

SCALE: NONE

P1-2 P3-2
P1-3

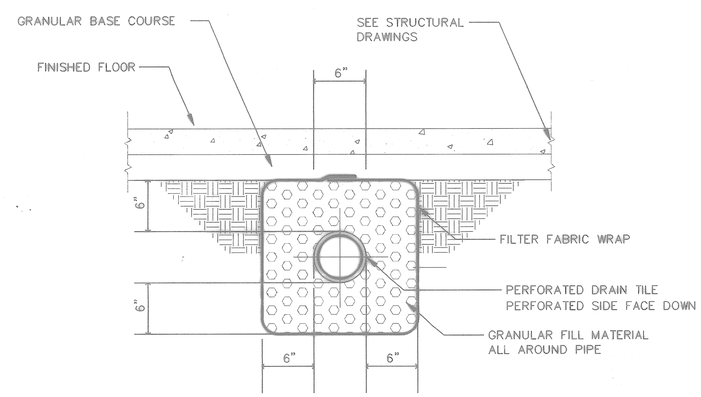

7 SUBSOIL DRAINAGE DETAIL

SCALE: NONE

P1-1 P3-2
P1-4

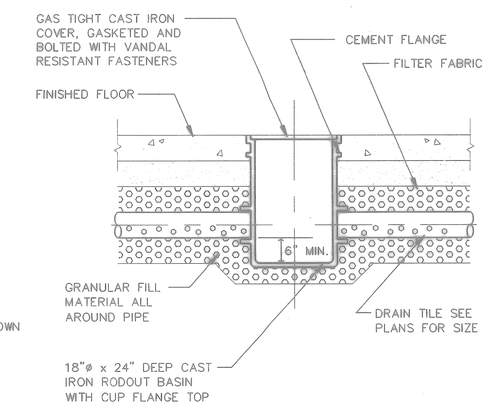

8 ROD OUT BASIN DETAIL

SCALE: NONE

P1-1 P3-2
P1-4

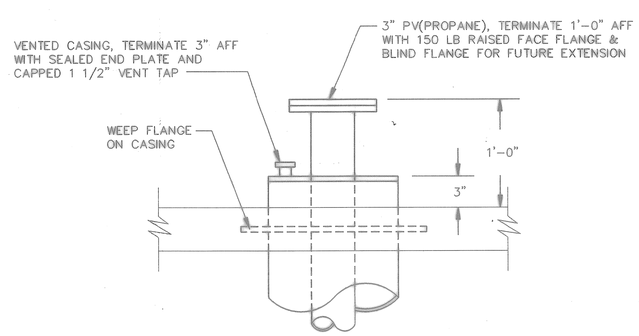

9 PROPANE ENTRANCE DETAIL

SCALE: NONE

P1-1 P3-2

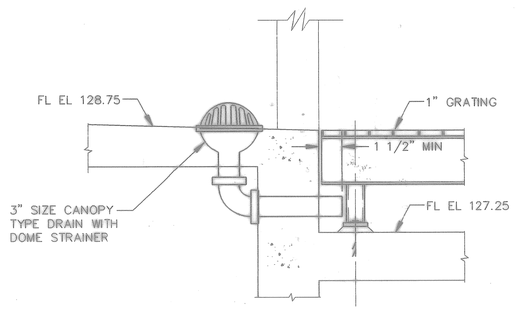

10 DRAIN DETAIL

SCALE: NONE

P1-3 P3-2

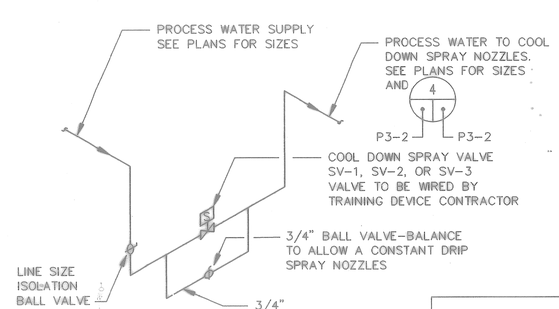

11 COOL DOWN SPRINKLER VALVE DETAIL

SCALE: NONE

P3-2 P3-2

FOR OFFICIAL USE ONLY

RECORD DRAWING
DATE 06/08/98

DATE 07-31-97	SHEET AS-BUILT, NO CORRECTIONS	BY	INITIAL

Knight Architects Engineers Planners, Inc.
549 West Randolph Street
Chicago, IL 60661
Established in 1945
A Limited Liability Company Knight Architects Engineers Planners, Inc.
Copyright 1994 Knight Architects Engineers Planners, Inc.

DEPARTMENT OF THE NAVY — NAVAL FACILITIES ENGINEERING COMMAND
SOUTHERN DIVISION
CHARLESTON, S.C.

NAVAL TRAINING CENTER — GREAT LAKES, ILLINOIS

DESIGN CALDER CHK CASTELLI CHK RAUCH
SUPV RAUCH CH. ENGR
SUBMITTED BY — DATE
FPM MEMBER TDSF
EIC — BR HD
FPE — DIR.
APPROVED — DATE
OFFICER IN CHARGE
APPROVED — DATE 9/12/94
EFD FOR COMMANDER NAVFAC

DAMAGE CONTROL SCHOOL PIPING DETAILS

SIZE	CODE IDENT NO.	NAVFAC DRAWING NO.	DRAWING NO.
F	80091	5276607	P3-2
SCALE AS NOTED		CONSTR CONTR NO. N62467-93-C-1143	
		SPEC 06-93-1143	SHEET 173 OF

STATE OF OHIO — CHRISTOPHER S. RAUCH — E-54727 — PROFESSIONAL ENGINEER

ARCH. & ENGR. SEAL

Filename: P:\PAPER\JPPSP302 User: MAC Date&time: 08/30/94 10:38:33

P: TTL-BLDF	FS	Item=0.0
P: TTL-HNOT	FS	Item=0.0
P: JPPSP302	FS	Item=0.0
P: JPNOGEN2	MS	Item=0.0

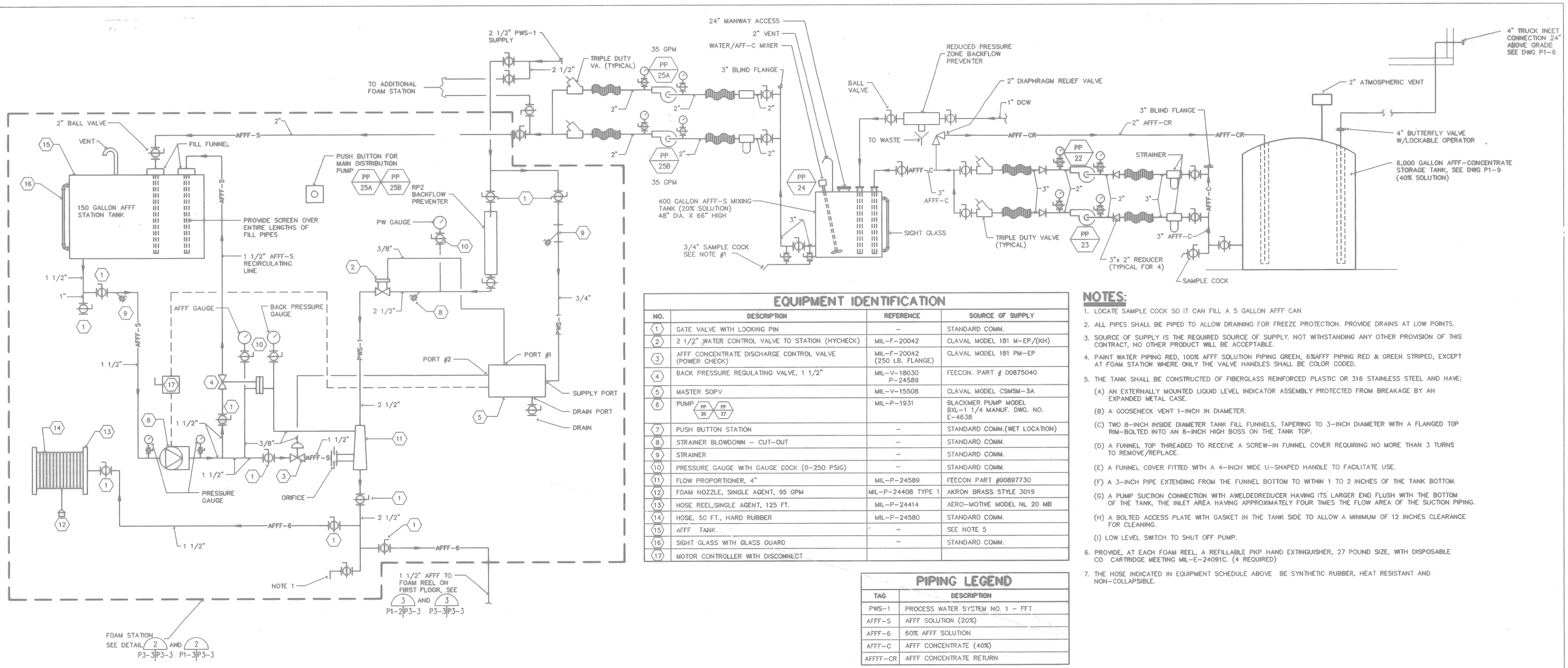

EQUIPMENT IDENTIFICATION

NO.	DESCRIPTION	REFERENCE	SOURCE OF SUPPLY
1	GATE VALVE WITH LOCKING PIN	–	STANDARD COMM.
2	2 1/2" WATER CONTROL VALVE TO STATION (HYCHECK)	MIL-F-20042	CLAVAL MODEL 181 M-EP/(KH)
3	AFFF CONCENTRATE DISCHARGE CONTROL VALVE (POWER CHECK)	MIL-F-20042 (250 LB. FLANGE)	CLAVAL MODEL 181 PM-EP
4	BACK PRESSURE REGULATING VALVE, 1 1/2"	MIL-V-18030 P-24589	FEECON. PART # 00875040
5	MASTER SOPV	MIL-V-15508	CLAVAL MODEL CSM5M-3A
6	PUMP PP 26 / PP 27	MIL-P-1931	BLACKMER PUMP MODEL BXL-1 1/4 MANUF. DWG. NO. E-4638
7	PUSH BUTTON STATION	–	STANDARD COMM.(WET LOCATION)
8	STRAINER BLOWDOWN – CUT-OUT	–	STANDARD COMM.
9	STRAINER	–	STANDARD COMM.
10	PRESSURE GAUGE WITH GAUGE COCK (0-250 PSIG)	–	STANDARD COMM.
11	FLOW PROPORTIONER, 4"	MIL-P-24589	FEECON PART #00897730
12	FOAM NOZZLE, SINGLE AGENT, 95 GPM	MIL-P-24408 TYPE 1	AKRON BRASS STYLE 3019
13	HOSE REEL,SINGLE AGENT, 125 FT.	MIL-P-24414	AERO-MOTIVE MODEL NL 20 MB
14	HOSE, 50 FT., HARD RUBBER	MIL-P-24580	STANDARD COMM.
15	AFFF TANK	–	SEE NOTE 5
16	SIGHT GLASS WITH GLASS GUARD	–	STANDARD COMM.
17	MOTOR CONTROLLER WITH DISCONNECT		

PIPING LEGEND

TAG	DESCRIPTION
PWS-1	PROCESS WATER SYSTEM NO. 1 – FFT
AFFF-S	AFFF SOLUTION (20%)
AFFF-6	60% AFFF SOLUTION
AFFF-C	AFFF CONCENTRATE (40%)
AFFFF-CR	AFFF CONCENTRATE RETURN

NOTES:

1. LOCATE SAMPLE COCK SO IT CAN FILL A 5 GALLON AFFF CAN
2. ALL PIPES SHALL BE PIPED TO ALLOW DRAINING FOR FREEZE PROTECTION. PROVIDE DRAINS AT LOW POINTS.
3. SOURCE OF SUPPLY IS THE REQUIRED SOURCE OF SUPPLY. NOT WITHSTANDING ANY OTHER PROVISION OF THIS CONTRACT, NO OTHER PRODUCT WILL BE ACCEPTABLE.
4. PAINT WATER PIPING RED, 100% AFFF SOLUTION PIPING GREEN, 6%AFFF PIPING RED & GREEN STRIPED, EXCEPT AT FOAM STATION WHERE ONLY THE VALVE HANDLES SHALL BE COLOR CODED.
5. THE TANK SHALL BE CONSTRUCTED OF FIBERGLASS REINFORCED PLASTIC OR 316 STAINLESS STEEL AND HAVE:
   (A) AN EXTERNALLY MOUNTED LIQUID LEVEL INDICATOR ASSEMBLY PROTECTED FROM BREAKAGE BY AN EXPANDED METAL CASE.
   (B) A GOOSENECK VENT 1-INCH IN DIAMETER.
   (C) TWO 8-INCH INSIDE DIAMETER TANK FILL FUNNELS, TAPERING TO 3-INCH DIAMETER WITH A FLANGED TOP RIM-BOLTED INTO AN 8-INCH HIGH BOSS ON THE TANK TOP.
   (D) A FUNNEL TOP THREADED TO RECEIVE A SCREW-IN FUNNEL COVER REQUIRING NO MORE THAN 3 TURNS TO REMOVE/REPLACE.
   (E) A FUNNEL COVER FITTED WITH A 4-INCH WIDE U-SHAPED HANDLE TO FACILITATE USE.
   (F) A 3-INCH PIPE EXTENDING FROM THE FUNNEL BOTTOM TO WITHIN 1 TO 2 INCHES OF THE TANK BOTTOM.
   (G) A PUMP SUCTION CONNECTION WITH AWELDEDREDUCER HAVING ITS LARGER END FLUSH WITH THE BOTTOM OF THE TANK, THE INLET AREA HAVING APPROXIMATELY FOUR TIMES THE FLOW AREA OF THE SUCTION PIPING.
   (H) A BOLTED ACCESS PLATE WITH GASKET IN THE TANK SIDE TO ALLOW A MINIMUM OF 12 INCHES CLEARANCE FOR CLEANING.
   (I) LOW LEVEL SWITCH TO SHUT OFF PUMP.
6. PROVIDE, AT EACH FOAM REEL, A REFILLABLE PKP HAND EXTINGUISHER, 27 POUND SIZE, WITH DISPOSABLE CO CARTRIDGE MEETING MIL-E-24091C. (4 REQUIRED)
7. THE HOSE INDICATED IN EQUIPMENT SCHEDULE ABOVE BE SYNTHETIC RUBBER, HEAT RESISTANT AND NON-COLLAPSIBLE.

1 AFFF SYSTEM SCHEMATIC

SCALE: NOT TO SCALE

P3-3

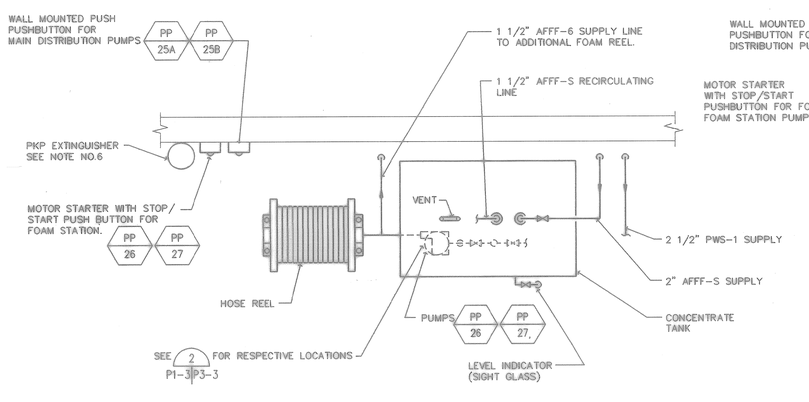

PLAN

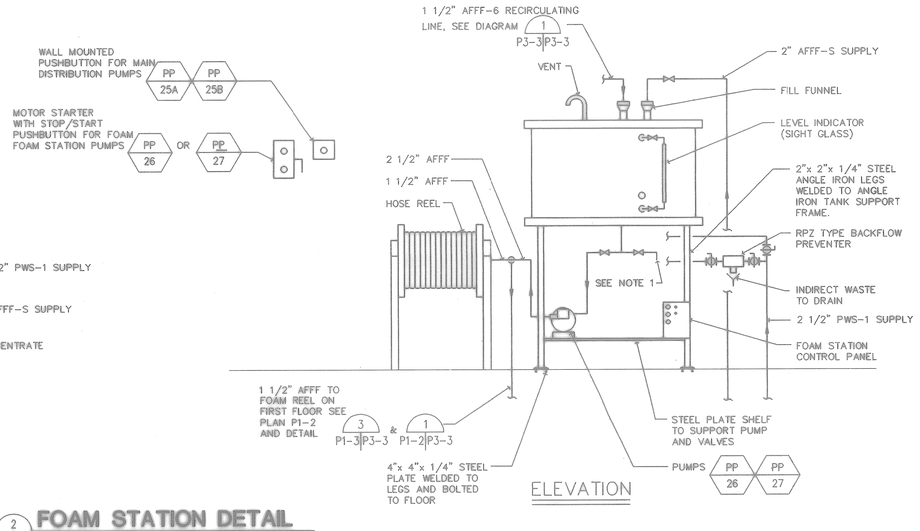

ELEVATION

2 FOAM STATION DETAIL

SCALE: NOT TO SCALE

P1-3 P3-3

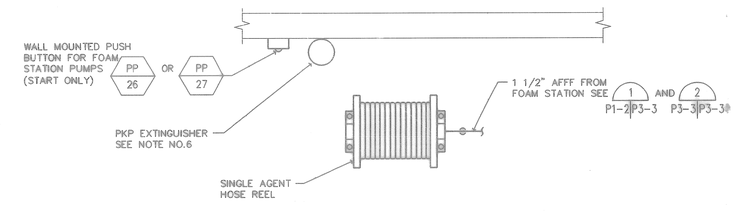

3 FOAM REEL DETAIL

SCALE: NOT TO SCALE

P1-2 P3-3

FOR OFFICIAL USE ONLY

RECORD DRAWING
DATE 06/08/98

DATE 07-31-97 SHEET AS-BUILT, NO CORRECTIONS BY DETAIL

Kajima Architects Engineers Planners, Inc.
549 West Randolph Street
Chicago, IL 60661
Telephone: (312) 930-9700
Kajima/Ralph Hall & Associates, Inc. Company
a Corporate Joint Venture Architects Engineers Planners, Inc.

DSGN CALDER CASTELLO RAUCH
SUPV RAUCH CH. ENGR
SUBMITTED BY DATE 8-31-94
FPM MECHANICAL ENG.
E/C BR HD.
FPC DIR.
APPROVED DATE
OFFICER IN CHARGE
APPROVED DATE 9/16/94
CO FOR COMMANDER, NAVFAC

STATE OF OHIO CHRISTOPHER S. RAUCH E-54727 REGISTERED PROFESSIONAL ENGINEER
ARCH. & ENGR. SEAL

DEPARTMENT OF THE NAVY
NAVAL FACILITIES ENGINEERING COMMAND
SOUTHERN DIVISION
CHARLESTON, S.C.

NAVAL TRAINING CENTER GREAT LAKES, ILLINOIS

DAMAGE CONTROL SCHOOL
AFFF SYSTEM SCHEMATIC AND DETAILS

SIZE	CODE IDENT NO.	NAVFAC DRAWING NO.	DRAWING NO.
F	80091	5276608	P3-3
SCALE NONE		CONSTR CONTR NO. N62467-93-C-1143	
		SPEC 06-93-1143	SHEET 124 OF

User: MAC Filename: P:\PAPER\JPPSP303
Date&time: 08/30/94 10:40:08

A: TB-BLOCK PS	tsp=0.0	
A: TB-LOGOS PS	tsp=0.0	
A: JPPSP303 PS	tsp=0.0	
A: JPMODENS MS	tsp=0.0	

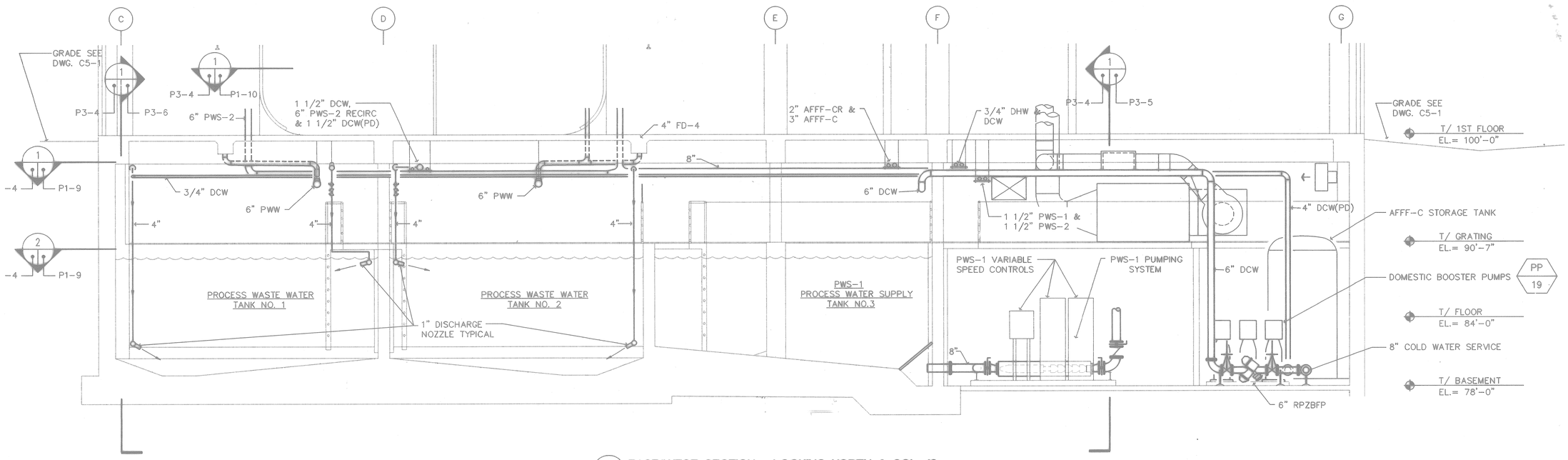

1 EAST/WEST SECTION - LOOKING NORTH @ COL. 18

SCALE: 1/4"=1'-0"

P3-4 — P3-4

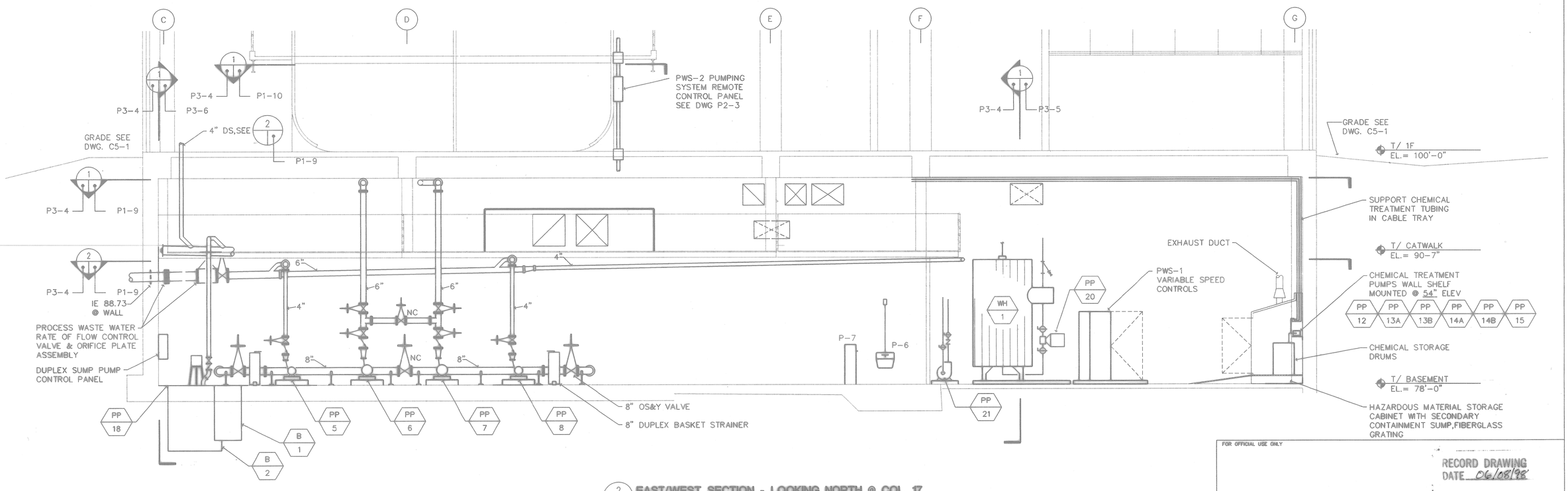

2 EAST/WEST SECTION - LOOKING NORTH @ COL. 17

SCALE: 1/4"=1'-0"

P3-4 — P3-4

GRAPHIC SCALE

5' 0' 5' 10'

SCALE 1/4" = 1'-0"

FOR OFFICIAL USE ONLY

RECORD DRAWING
DATE 06/08/98

DATE 07-31-97 AS-BUILT, NO CORRECTIONS BY: APPR. 12.8.98

Knight Architects Engineers Planners, Inc.
549 West Randolph Street
Chicago, IL 60661
Established in 1940
Knight Architects Engineers & Associates, Inc. Company
© Copyright 1994 Knight Architects Engineers Planners, Inc.

DSGN CALDER/R. CASTELLO/CHK RAUCH
SUPV RAUCH CH ENGR
SUBMITTED BY 8-31-97
DPM MEMBER/MAJ
EIC GR HD
FPE DR
APPROVED DATE
OFFICER IN CHARGE
APPROVED 9/12/98
EFD FOR COMMANDER, NAVFAC

ARCH. & ENGR. SEAL

DEPARTMENT OF THE NAVY NAVAL FACILITIES ENGINEERING COMMAND
SOUTHERN DIVISION
CHARLESTON, S.C.

NAVAL TRAINING CENTER GREAT LAKES, ILLINOIS

DAMAGE CONTROL SCHOOL PROCESS TANK ROOM SECTION & ELEVATIONS - EAST/WEST

SIZE	CODE IDENT NO.	NAVFAC DRAWING NO.	DRAWING NO.
F	80091	5276609	P3-4
		CONSTR CONTR NO. N62467-93-C-1143	
SCALE 1/4"=1'-0"		SPEC 06-93-1143	SHEET 195 OF

Filename: P:\PAPER\JPPSP304 User: MAC Date&time: 08/31/94 14:00:48

P: TTL-BLOCK PS line=0.0
P: TTL-RNGT PS line=0.0
P: JPPSP304 PS line=0.0
P: JPPSP01 COUNT=2
P: JPPSP02 COUNT=2

GENERAL NOTES:

1. "TEMPORARY PIPE" SHALL BE MADE UP BY THE CONTRACTOR TO FIT BETWEEN VALVES V-4A & V-4B AND ANOTHER TO FIT BETWEEN VALVES V-6A & V-6B. IN THE EVENT OF THE FAILURE OR EITHER PWS-1 OR PWS-2 PUMPING SYSTEMS THE BLIND FLANGES ON VALVES V-4A, V-4B, V-6A, AND V-6B CAN BE REMOVED, THE TEMPORARY PIPES CAN BE INSTALLED AND THE REMAINING PUMPSET CAN PROVIDE SERVICE TO BOTH FFT AND DCT TRAINING DEMANDS. TEMPORARY PIPES SHALL BE STORED ON WALL HOOKS IN THIS PUMP ROOM WHEN NOT IN USE.

2. REFER TO PROCESS WATER SYSTEMS FLOW DIAGRAM ON DWG. P2-3 AND SPECIFICATIONS SECTION 15450-PROCESS WATER SYSTEMS.

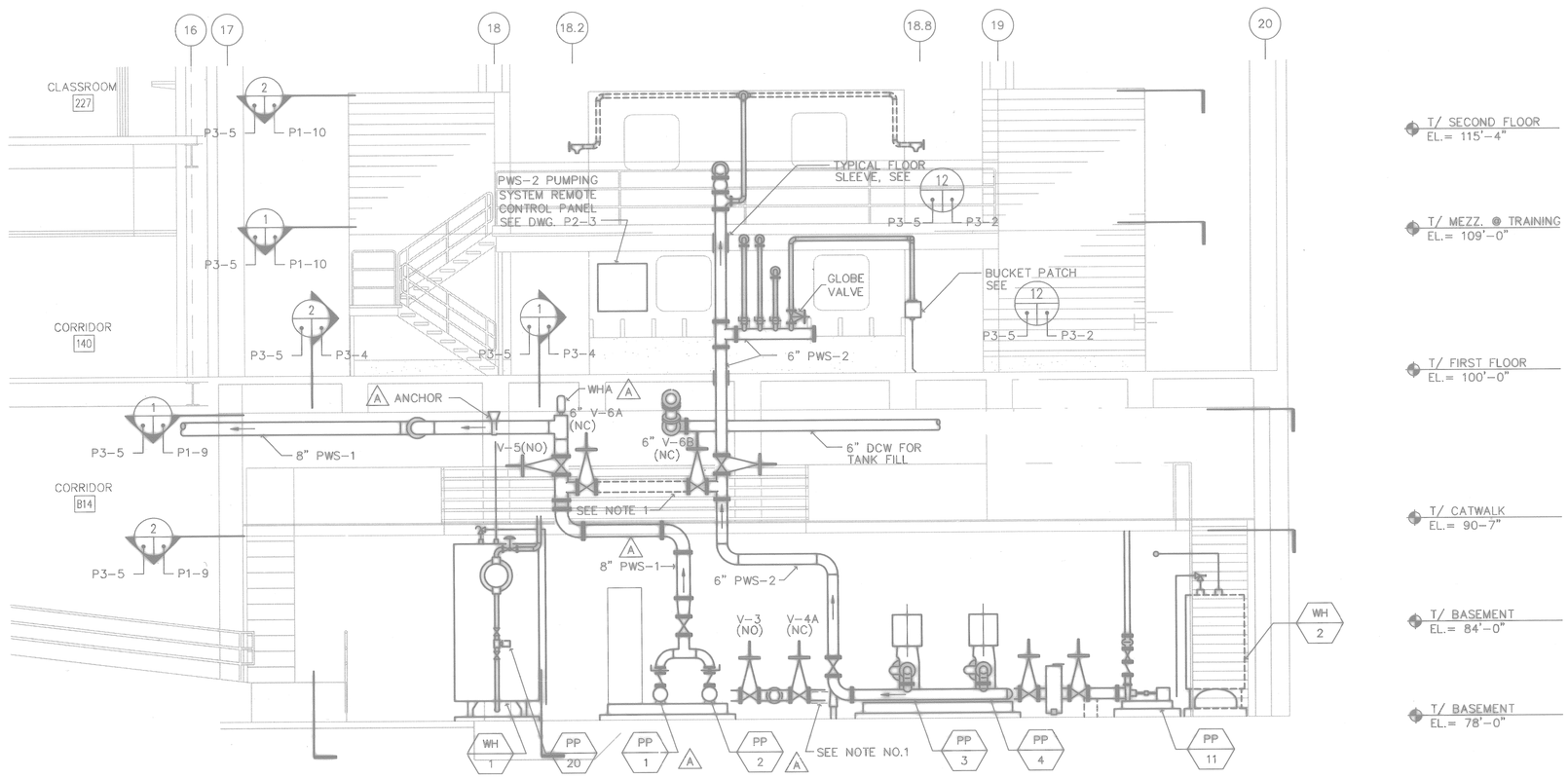

1 **EAST ELEVATION**
SCALE: 1/4"=1'-0"
P3-5

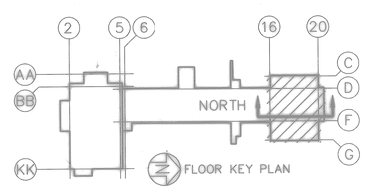

GRAPHIC SCALE
5' 0' 5' 10'
SCALE 1/4" = 1'-0"

FOR OFFICIAL USE ONLY

RECORD DRAWING
DATE 06/08/98

DATE 07-31-97 ISSUE CORRECTED TO AS-BUILT BY DJS INITIAL

Knight Architects Engineers Planners, Inc.
549 West Randolph Street
Chicago, IL 60661
Established in 1910
A Lester B. Knight & Associates, Inc. Company
© Copyright 1994 Knight Architects Engineers Planners, Inc.

DSGN CALDER CASTELLI RAUCH
SUPV RAUCH CH ENGR
SUBMITTED BY DATE
FIRM MEMBER TITLE
EIC SR HD
FPE DR
APPROVED DATE
OFFICER IN CHARGE
APPROVED DATE
EFD FOR COMMANDER, NAVFAC

ARCH. & ENGR. SEAL

DEPARTMENT OF THE NAVY NAVAL FACILITIES ENGINEERING COMMAND
SOUTHERN DIVISION
CHARLESTON, S.C.

NAVAL TRAINING CENTER GREAT LAKES, ILLINOIS

DAMAGE CONTROL SCHOOL
PROCESS TANK ROOM
EAST ELEVATION

SIZE	CODE IDENT NO.	NAVFAC DRAWING NO.	DRAWING NO.
F	80091	5276610	P3-5
		CONSTR CONTR NO. N62467-93-C-1143	
SCALE 1/4"=1'-0"		SPEC 06-93-1143	SHEET 196 OF

Date&time: 10/30/97 11:23:40 User: TWhite Filename: P:\PAPER\CHANGED\DJS\JPPSP305

196

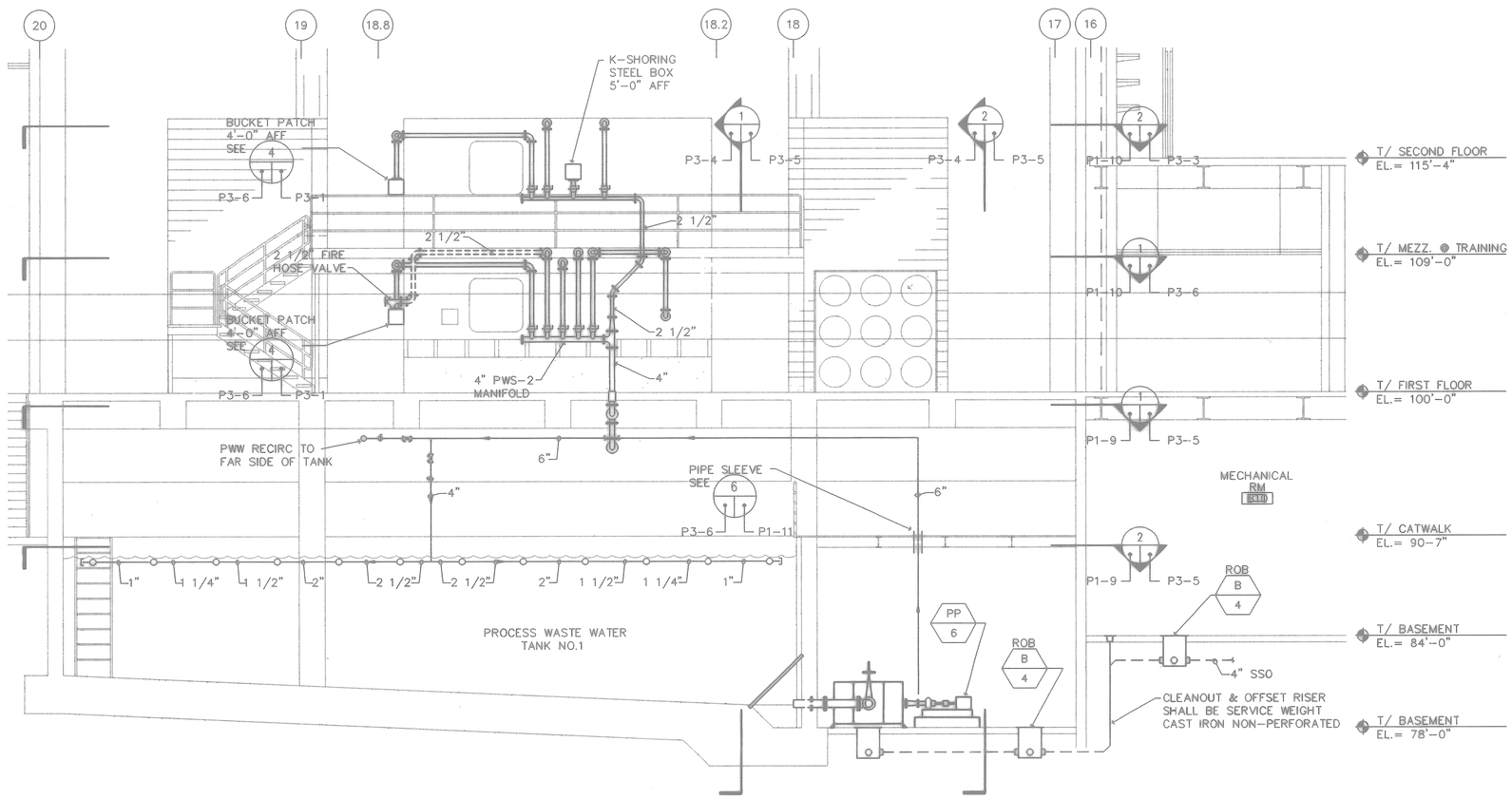

1 **WEST ELEVATION**
SCALE: 1/4"=1'-0"
P3-6

GRAPHIC SCALE
5' 0' 5' 10'
SCALE 1/4" = 1'-0"

STATE OF OHIO
CHRISTOPHER S. RAUCH
E-54727
PROFESSIONAL ENGINEER

ARCH. & ENGR. SEAL

FOR OFFICIAL USE ONLY

RECORD DRAWING
DATE 06/08/98

DATE 07-31-97 STATUS AS-BUILT, NO CORRECTIONS BY DATE

Kaplan Architects Engineers Planners, Inc.
549 West Randolph Street
Chicago, IL 60661
Established in 1946
A Leader in Health & Associates, Inc. Company
©Copyright 1997 Kaplan Architects Engineers Planners, Inc.

DEPARTMENT OF THE NAVY
NAVAL FACILITIES ENGINEERING COMMAND
SOUTHERN DIVISION
CHARLESTON, S.C.

NAVAL TRAINING CENTER GREAT LAKES, ILLINOIS

DSGN CALDER CASTELLO RAUCH
SUPV RAUCH CH ENGR
SUBMITTED BY DATE
FOR MONROE VAN 8-31-94
EIC BR HD
FPD DIR

DAMAGE CONTROL SCHOOL
PROCESS TANK ROOM
WEST ELEVATION

APPROVED DATE
OFFICER IN CHARGE
APPROVED DATE 9/12/94
CTO FOR COMMANDER NAVFAC

SIZE	CODE IDENT NO.	NAVFAC DRAWING NO.	DRAWING NO.
F	80091	5276611	P3-6
		CONSTR CONTR NO. N62467-93-C-1143	
SCALE 1/4"=1'-0"		SPEC 08-93-1143	SHEET 177 OF

P: TR-BLOCK PS Size=0.0			
P: TR-KNOT PS Size=0.0			
P: P3SP3S MS Size=0.0			
P: P3SP3S MS Size=0.0			
P: APPP306 KS Size=0.0			

Date&Time: 08/30/94 10:45:09 User: MAC Filename: P:\PAPER\JPPSP306

PUMP SCHEDULE

UNIT NO.	SERVICE	LOCATION	TYPE	GPM	HEAD FT. WG.	ELECTRICAL HP	ELECTRICAL VOLT/PH/HZ	ELECTRICAL RPM	REMARKS
PP 1	PROCESS WATER SUPPLY #1 – FFT	DCT BASEMENT TANK ROOM B16	CENTRIF.	500	500	100	460/3/60	3500	VARIABLE SPEED DRIVE
PP 2	PROCESS WATER SUPPLY #1 – FFT	DCT BASEMENT TANK ROOM B16	CENTRIF.	500	500	100	460/3/60	3500	VARIABLE SPEED DRIVE
PP 3	PROCESS WATER SUPPLY #2 – DCT	DCT BASEMENT TANK ROOM B16	CENTRIF.	300	289	40	460/3/60	3500	VARIABLE SPEED DRIVE
PP 4	PROCESS WATER SUPPLY #2 – DCT	DCT BASEMENT TANK ROOM B16	CENTRIF.	300	289	40	460/3/60	3500	VARIABLE SPEED DRIVE
PP 5	PROCESS WASTE #1 TANK #1	DCT BASEMENT TANK ROOM B16	CENTRIF.	175	25	2	460/3/60	1750	
PP 6	PROCESS WASTE #1 RECIRC. – TANK #1	DCT BASEMENT TANK ROOM B16	CENTRIF.	500	80	15	460/3/60	1750	
PP 7	PROCESS WASTE #1 RECIRC. – TANK #2	DCT BASEMENT TANK ROOM B16	CENTRIF.	500	80	15	460/3/60	1750	
PP 8	PROCESS WASTE #1 TANK #2	DCT BASEMENT TANK ROOM B16	CENTRIF.	175	25	2	460/3/60	1750	
PP 9	PROCESS WATER #2 RECIRCULATION	DCT BASEMENT TANK ROOM B16	CENTRIF.	100	100	7 1/2	460/3/60	1750	
PP 10	PROCESS WATER #2	DCT BASEMENT TANK ROOM B16	CENTRIF.	100	100	7 1/2	460/3/60	1750	* STANDBY FOR RECIRC./DISCH.
PP 11	PROCESS WASTE #2 (DISCHARGE TO SAN.)	DCT BASEMENT TANK ROOM B16	CENTRIF.	100	30	2	460/3/60	1750	
PP 12	CHEMICAL WATER TREATMENT	DCT BASEMENT TANK ROOM B16	METERING	1	231	1/10	120/1/60	–	PROCESS WASTE WATER–FFT CT–1 (DEFOAM)
PP 13A	CHEMICAL WATER TREATMENT	DCT BASEMENT TANK ROOM B16	METERING	1	231	1/10	120/1/60	–	PROCESS WASTE WATER–FFT CT–2 (PH+)
PP 13B	CHEMICAL WATER TREATMENT	DCT BASEMENT TANK ROOM B16	METERING	1	231	1/10	120/1/60	–	PROCESS WASTE WATER–DCT CT–1 (PH+)
PP 14A	CHEMICAL WATER TREATMENT	DCT BASEMENT TANK ROOM B16	METERING	1	231	1/10	120/1/60	–	PROCESS WASTE WATER–FFT CT–3 (PH–)
PP 14B	CHEMICAL WATER TREATMENT	DCT BASEMENT TANK ROOM B16	METERING	1	231	1/10	120/1/60	–	PROCESS WASTE WATER–DCT CT–3 (PH–)
PP 15	CHEMICAL WATER TREATMENT	DCT BASEMENT TANK ROOM B16	METERING	1	231	1/10	120/1/60	–	PROCESS WATER SUPPLY #2 DCT CT–4 (HYPOCHLORINE)
PP 16	OILY WASTE WATER SUMP PUMP	DCT BASEMENT STORAGE RM B07	CENTRIF.	125	35	2@5	460/3/60	1150	DUPLEX W/CONTROL PANEL
PP 17	SEWAGE EJECTOR	DCT BASEMENT TANK ROOM B16	CENTRIF.	125	20	2@ 1 1/2	460/3/60	1150	DUPLEX W/CONTROL PANEL
PP 18	SUMP PUMP	DCT BASEMENT TANK ROOM B16	CENTRIF.	300	20	2@3	460/3/60	1150	DUPLEX W/CONTROL PANEL
PP 19	DOMESTIC WATER BOOSTER	DCT BASEMENT TANK ROOM B16	CENTRIF.	1@ 125 2@ 250	103 103	7 1/2 15	460/3/60	3500	TRIPLEX W/CONTROL PANEL
PP 20	DOMESTIC HOT WATER CIRCULATOR	DCT BASEMENT TANK ROOM B16	INLINE CENTRIF.	–	–	1/6	120/1/60	1750	FURNISHED W/WATER HEATER
PP 21	DOMESTIC HOT WATER RECIRCULATOR	DCT BASEMENT TANK ROOM B16	CENTRIF.	10	30	1/4	120/1/60	1750	
PP 22	AFFF CONCENTRATE	DCS SUPPORT TANK FILLING ROOM 131	POSITIVE DISPL.	30	100 PSIG	5	460/3/60	230	W/GEAR REDUCER
PP 23	AFFF CONCENTRATE	DCS SUPPORT TANK FILLING ROOM 131	POSITIVE DISPL.	30	100 PSIG	5	460/3/60	230	W/GEAR REDUCER
PP 24	AFFF MIXER	DCS SUPPORT TANK FILLING ROOM 131	PROPELLER	–	–	1/3	120/1/60	*	VARIABLE SPEED 20–200 RPM
PP 25A	AFFF TRANSFER PUMP	DCS SUPPORT TANK FILLING ROOM 131	POSITIVE DISPL.	30	50 PSIG	2	460/3/60	350	W/GEAR REDUCER
PP 25B	AFFF TRANSFER PUMP	DCS SUPPORT TANK FILLING ROOM 131	POSITIVE DISPL.	30	50 PSIG	2	460/3/60	350	W/GEAR REDUCER
PP 26	AFFF STATION PUMP	FFT THIRD FLOOR STAGING AREA	POSITIVE DISPL.	35	200 PSIG	10	460/3/60	–	
PP 27	AFFF STATION PUMP	FFT THIRD FLOOR STAGING AREA	POSITIVE DISPL.	35	200 PSIG	10	460/3/60	–	FURNISHED WITH STORAGE TANK
PP 28	CO2 REFRIGERATION COMPRESOR	OUTSIDE ON GRADE	–	–	–	3	460/3/60	–	FURNISHED WITH STORAGE TANK ASSEMBLY
PP 29	CO2 REFILL PUMP	DCS SUPPORT TANK FILLING ROOM 131	POSITIVE DISPL.	45 LBS /MIN.	1000 PSIG	10	460/3/60	–	
PP 30	SUMP PUMP	DCS SUPPORT BASEMENT ELEVATOR PIT	CENTRIF.	26	18	1/3	120/1/60	3500	SUBMERSIBLE
PP 31	PWS–2 HEATER CIRCULATOR	DCT BASEMENT TANK ROOM BLD	INLINE CENTRIF.	–	–	1/6	120/1/60	1750	FURNISHED WITH HEATER

PLUMBING SCHEDULE

TAG	FIXTURE	RISER AND AIR CHAMBER FOR FIXTURE HW	RISER AND AIR CHAMBER FOR FIXTURE CW	FIXTURE NIPPLE (VALVE INLET) HW	FIXTURE NIPPLE (VALVE INLET) CW	CODE REQUIREMENTS WASTE	CODE REQUIREMENTS VENT	MOUNTING HEIGHT (FLR. TO RIM)	ELECTRICAL	REMARKS
P–1	WATER CLOSET	–	1 1/4"	–	1"	4"	2"	15"	–	WALL MOUNTED–FLUSH VALVE
P–2	URINAL	–	1"	–	3/4"	2"	1 1/2"	22"	–	WALL MOUNTED–FLUSH VALVE
P–3	LAVATORY	3/4"	3/4"	1/2"	1/2"	1 1/2"	1 1/2"	34"	–	WALL HUNG, STUDENT
P–4	LAVATORY	3/4"	3/4"	1/2"	1/2"	1 1/2"	1 1/2"	34"	–	WALL HUNG, STAFF
P–5	LAVATORY	3/4"	3/4"	1/2"	1/2"	1 1/2"	1 1/2"	34"	–	WALL HUNG, FIRST AID
P–6	SERVICE SINK	3/4"	3/4"	1/2"	1/2"	3"	2"	26"	–	WALL MOUNTED
P–7	ELECTRIC WATER COOLER	–	3/4"	–	1/2"	1 1/2"	1 1/2"	36"	1/5 HP, 120V	FLOOR MOUNTED
P–8	ELECTRIC WATER COOLER	–	3/4"	–	1/2"	1 1/2"	1 1/2"	36"	1/5 HP, 120V	WALL MOUNTED
P–9	DRINKING FOUNTAIN	–	3/4"	–	1/2"	1 1/2"	1 1/2"	36"	–	WALL MOUNTED, STAINLESS STEEL
P–10	SHOWER HEAD & MIXING VALVE ASSEMBLY	3/4"	3/4"	1/2"	1/2"	2"	1 1/2"	*	–	*
P–11	SHOWER STALL & RECEPTOR	–	–	–	–	2"	1 1/2"	–	–	FLOOR MOUNTED
P–12	GANG SHOWER & METERING VALVE ASSEMBLY	–	3/4"*	–	1/2"*	–	–	–	–	*TEMPERED WATER (3 HEADS)
P–13	GANG SHOWER MIXING VALVE ASSEMBLY	1"	1"	1"	1"	–	–	*	–	*72" FLOOR TO TOP OF CABINET
P–14	LAUNDRY TRAY	3/4"	3/4"	1/2"	1/2"	2"	1 1/2"	32"	–	FLOOR MOUNTED
P–15	SINGLE BOWL SINK	3/4"	3/4"	1/2"	1/2"	2"	1 1/2"	–	–	COUNTERTOP MOUNTED, STAINLESS STEEL
P–16	DOUBLE BOWL WORK SINK	3/4"	3/4"	1/2"	1/2"	2"	1 1/2"	–	–	FLOOR MOUNTED, STAINLESS STEEL
P–17	EMERGENCY STATION	–	1 1/2"	–	1 1/2"	–	–	–	–	FLOOR MOUNTED EMERGENCY STATION (FOR COOLDOWN, NOT MONITORED)
P–18	EMERGENCY STATION	–	1 1/2"	–	1 1/2"	–	–	–	15 AMP 120V	FLOOR MOUNTED EMERGENCY STATION (MONITORED)
P–19	HOSE BIBB	–	3/4"	–	3/4"	–	–	–	–	INTERIOR WITH VACUUM BREAKER
P–20	WALL HYDRANT	–	3/4"	–	3/4"	–	–	–	–	RECESSED FROST RESISTANT BOX TYPE WITH VACUUM BREAKER
P–21	LAUNDRY SERVICE BOX	3/4"	3/4"	3/4"	3/4"	2"	1 1/2"	1 1/2"	42"	RECESSED CONNECTOR BOX WITH WATER VALVES & 2" STANDPIPE

WATER HEATER SCHEDULE

UNIT NO.	LOCATION	STORAGE CAPACITY GALLONS	ELECTRICAL HP	ELECTRICAL PHASE	ELECTRICAL VOLT/PH/HZ	STEAM LB/HR (0 RSIG IN HX)	RECOVERY (GPH) AT 80 DEG F TEMP. RISE	REMARKS
WH 1	DCT MECHANICAL ROOM B16	1320	1/6*	120	1/60	940	1020	* PP 20
WH 2	DCT MECHANICAL ROOM B16	285	1/6*	120	1/60	645	3000	PWS–2 WATER HEATER

NOTE: SEE SPECIFICATION FOR COMPLETE DESCRIPTION.

AIR COMPRESSOR SCHEDULE

UNIT NO.	LOCATION	CAPACITY CFM	PRESSURE PSIG	RECEIVER GALLONS	ELECTRICAL HP	ELECTRICAL VOLTS/PH/HZ	VIBRATION ISOLATION TYPE	VIBRATION ISOLATION MINIMUM STATIC DEFL. IN.	REMARKS
AC 1	DCS SUPPORT TANK FILLING RM 131	12	5000	INTERNAL	10	460/3/60	SPRING	1.0	AIR COOLED BREATHING AIR COMPRESSOR
AC 2	DCT BASEMENT TANK RM B16	40	100	120	10	460/3/60	SPRING	1.0	AIR COOLED MAINTENANCE AIR COMPRESSOR

AIR DRYER SCHEDULE

UNIT NO.	LOCATION	TYPE	CAPACITY CFM	MAXIMUM WORKING PRESSURE PSIG	ELECTRICAL HP	ELECTRICAL VOLT/PH/HZ	REMARKS
AD 1	DCT BASEMENT TANK RM B16	REFRIG.	40	100	1/4	120/1/60	35° DEW POINT

DRAIN SCHEDULE

SYMBOL	DESCRIPTION
RD–1	CAST IRON DRAIN FOR METAL DECK WITH EXTENSION FLANGE, FLASHING RING WITH GRAVEL STOP, DOME STRAINER, SUMP RECEIVER, & UNDER DECK CLAMP
RD–2	SAME AS RD–1 EXCEPT WITH INTERNAL 3 INCH HIGH STANDPIPE (SECONDARY OVERFLOW DRAIM)
FD–1	FINISHED AREA FLOOR DRAIN, 2 PIECE CAST IRON BODY WITH REVERSIBLE COLLAR, ADJUSTABLE 6" SQUARE NICKEL BRONZE GRATE
FD–2	EQUIPMENT AREA FLOOR DRAIN, DEEP CAST IRON BODY WITH SEDIMENT BUCKET AND SQUARE CAST IRON GRATE
FD–3	8 INCH WIDE PRECAST POLYMER–CONCRETE, MODULAR SLOPED TRENCH DRAIN WITH SLOTTED DUCTILE IRON GRATE. FOR LENGTH, SEE PLANS
FD–4	4 INCH WIDE PRECAST POLYMER–CONCRETE, MODULAR, SLOPED TRENCH DRAIN WITH SLOTTED DUCTILE IRON GRATE. FOR LENGTH, SEE PLANS.
FD–5	FLOOR DRAIN, 2 PIECE CAST IRON BODY WITH REVERSIBLE COLLAR, WITH ADJUSTABLE 4" X 12" CAST IRON GRATE
FD–6	FLOOR DRAIN, 2 PIECE CST IRON BODY WITH REVERSIBLE COLLAR, WITH ADJUSTABLE 4" X 8" NICKEL BRONZE GRATE
FD–7	16x16x12 DEEP CAST IRON FLOOR SINK WITH ACID RESISTANT ENAMEL INTERIOR, GRATE, AND DOME BOTTOM STRAINER.
OD–1	INDIRECT WASTE DRAIN FOR ROOF MTD HVAC EQUIPMENT CAST IRON WITH 2 1/2" HIGH COLLAR, FLASHING FLANGE AND INTERNAL DOME STRAINER

NOTE: SEE SPECIFICATION FOR COMPLETE DESCRIPTION.

BASIN SCHEDULE

UNIT NO.	TYPE	LOCATION	DIA x DEPTH IN.	REMARKS
B 1	SETTLING BASIN	DCT BUILDING BASEMENT	36x30	
B 2	SUMP PUMP BASIN	DCT BUILDING BASEMENT	72x72	FOR PUMP PP 18
B 3	SEWAGE EJECTOR BASIN	DCT BUILDING BASEMENT	60x72	FOR PUMP PP 17
B 4	ROD–OUT BASIN	FFT, SUPPORT & DCT	18x24	WITH GAS TIGHT, GASKETED, BOLTED COVER
B 5	OIL SUMP BASIN	SUPPORT BUILDING BASEMENT	48x72	FOR PUMP PP 16

FOR OFFICIAL USE ONLY

RECORD DRAWING
DATE 06/08/98

DATE 07-31-97 ISSUE CORRECTED TO AS-BUILT BY DJS INITIAL

Knight Architects Engineers Planners, Inc.
540 West Madison Street
Chicago, IL 60661
Established in 1940
A Lester B. Knight & Associates, Inc. Company
©Copyright 1997 Knight Architects Engineers Planners, Inc.

DEPARTMENT OF THE NAVY — NAVAL FACILITIES ENGINEERING COMMAND
SOUTHERN DIVISION
CHARLESTON, S.C.

NAVAL TRAINING CENTER — GREAT LAKES, ILLINOIS

DSGN CALDER DR CASTELLO CHK RAUCH
SUPV RAUCH CH ENGR
SUBMITTED BY DATE
FIRM MEMBER TITLE
EIC BR HD
FPE DR
APPROVED DATE
OFFICER IN CHARGE
APPROVED DATE
FFD FOR COMMANDER, NAVFAC

ARCH. & ENGR. SEAL

DAMAGE CONTROL SCHOOL

PLUMBING SCHEDULES

SIZE	CODE IDENT NO.	NAVFAC DRAWING NO.	DRAWING NO.
F	80091	5276612	P4-1
SCALE NONE		CONSTR CONTR NO. N62467–93–C–1143	
		SPEC 06–93–1143	SHEET 198 OF

Filename: P:\PAPER\CHANGED\DJS\PPSP401 User: TWhite Date&time: 10/30/97 11:24:51