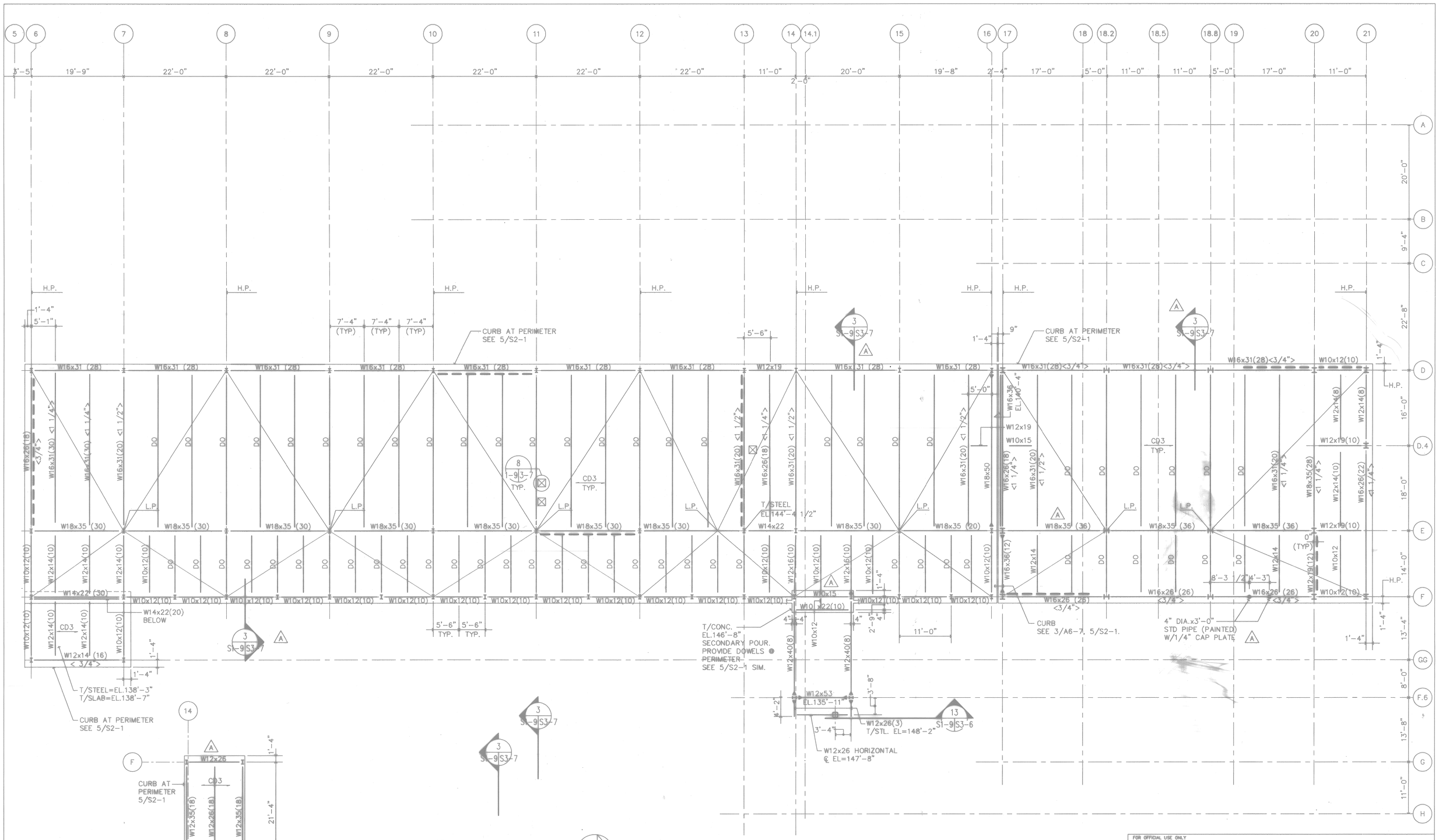

NOTES:
1. T/STEEL = EL.145'-4" AND T/SLAB = EL.145'-8" AT HIGH POINT (H.P.).
2. T/STEEL = EL.144'-7 1/2" AND T/SLAB = EL.144'-11 1/2" AT LOW POINT (L.P.).
3. COMPOSITE DECK SLAB IS DENOTED CD . SEE S3-7 FOR SCHEDULE AND DETAILS.
4. SEE S3-6 FOR STEEL CONNECTIONS.
5. SEE S2-1 FOR STRUCTURAL NOTES.
6. < > INDICATES CAMBER
( ) INDICATES NUMBER OF SHEAR STUDS
INDICATES MOMENT CONNECTION

NOTES:
1. T/STEEL = EL.155'-6" AND T/SLAB = EL.155'-10"

FOR OFFICIAL USE ONLY

RECORD DRAWING
DATE 06/08/98

07-31-97	ISSUE CORRECTED TO AS-BUILT	BY JTL	INITIAL

Knight Architects Engineers Planners, Inc.
549 West Randolph Street
Chicago, IL 60661
Knight & Associates
A Knight Architects Engineers Planners, Inc. Company
© Copyright 1996 Knight Architects Engineers Planners, Inc.

DSGN BUSCH DR MARSZALEK CH SWANSON
SUP WALKINGTON CH ENGR
SUBMITTED BY DATE
FIRM MEMBER TITLE
EIC SR HO
FPE DIR
APPROVED DATE
OFFICER IN CHARGE
APPROVED DATE
EFD FOR COMMANDER, NAVFAC

ARCH. & ENGR. SEAL

DEPARTMENT OF THE NAVY
NAVAL FACILITIES ENGINEERING COMMAND
SOUTHERN DIVISION
CHARLESTON, S.C.

NAVAL TRAINING CENTER GREAT LAKES, ILLINOIS

DAMAGE CONTROL SCHOOL
ROOF PLAN - NORTH

SIZE	CODE IDENT NO.	NAVFAC DRAWING NO.	DRAWING NO.
F	80091	5276526	S1-9
SCALE 1/8"=1'-0"		CONSTR CONTR NO. N62467-93-C-1143	
		SPEC 06-93-1143	SHEET 101 OF

Date&time: 11/24/97 07:32:19 User: TWhite Filename: P:\PAPER\CHANGED\JTL\JSPS1-09

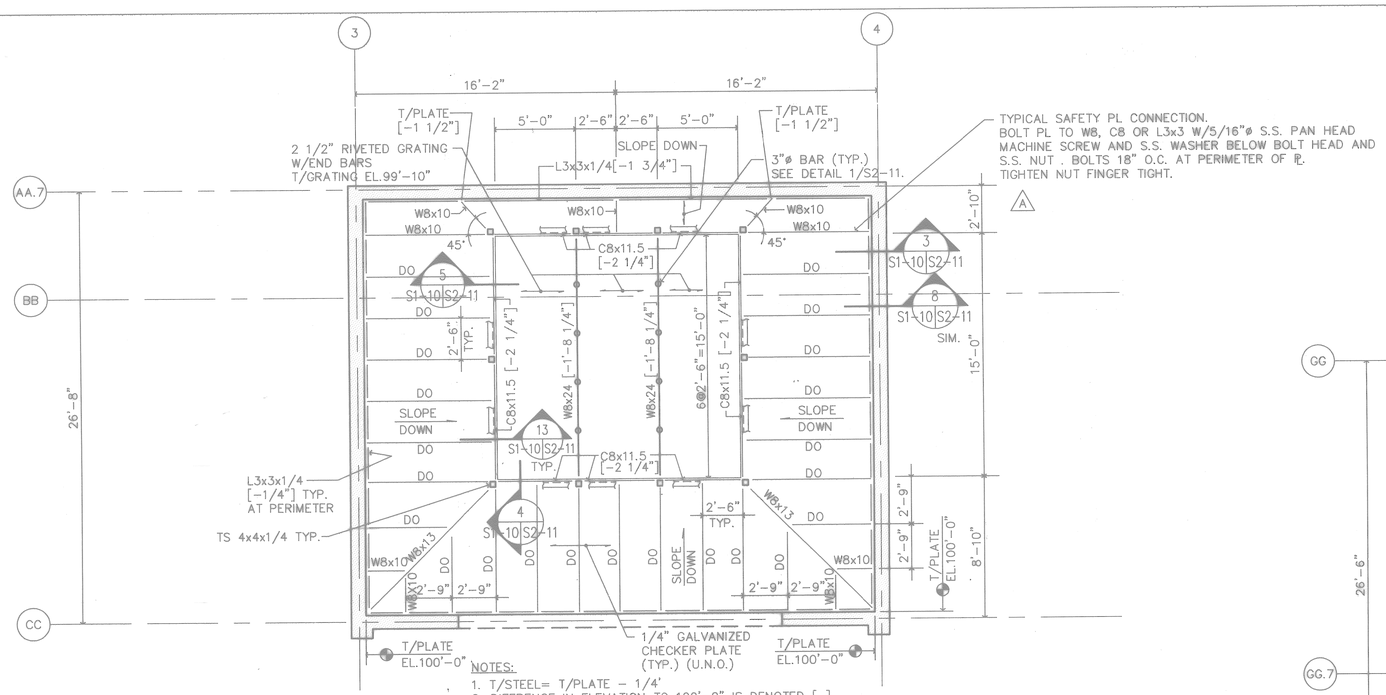

NOTES:
1. T/STEEL= T/PLATE - 1/4'
2. DIFFRENCE IN ELEVATION TO 100'-0" IS DENOTED [ ].

A S1-1 S1-10 **PIT FIRE PLAN** SCALE: 1/4"= 1'-0"

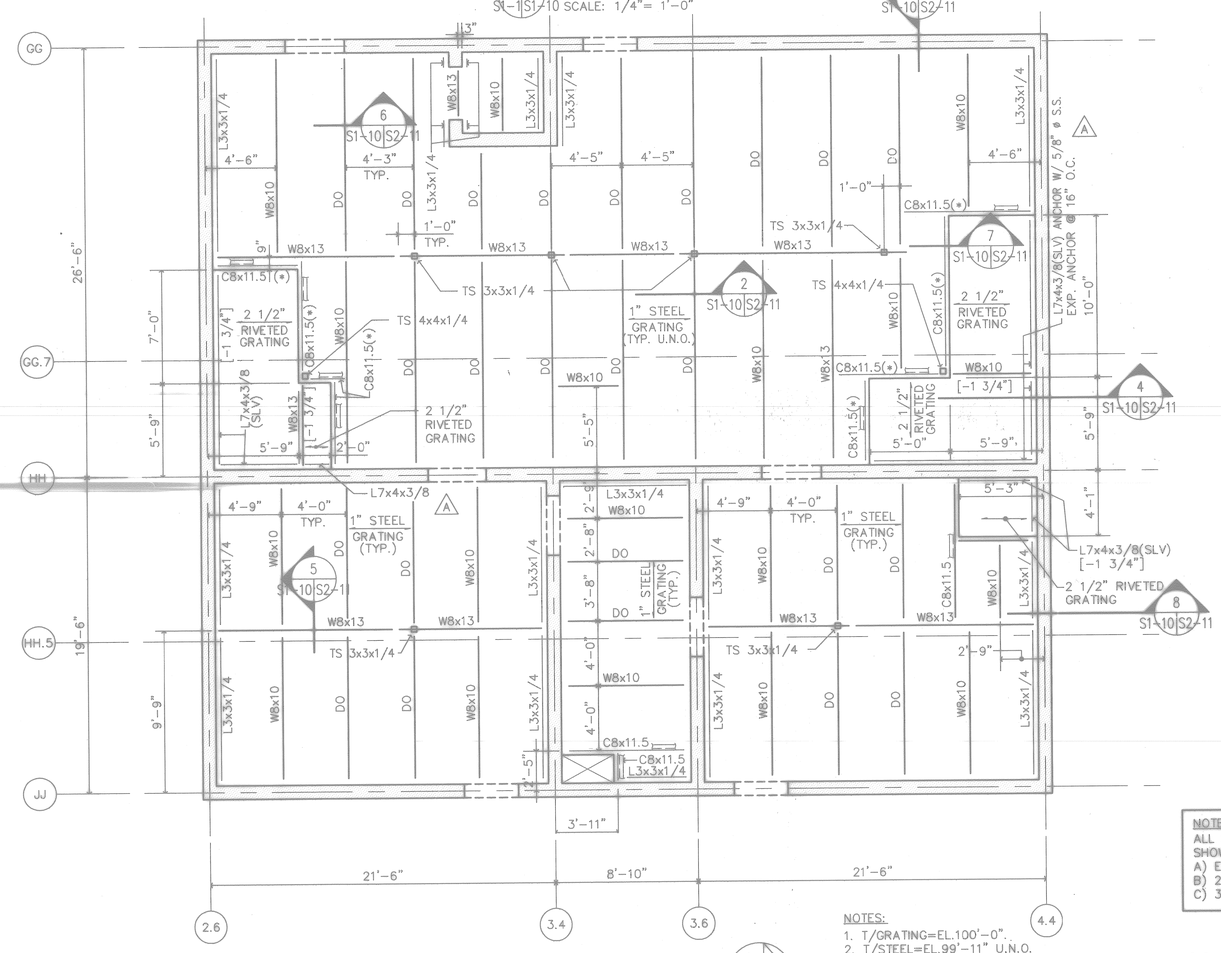

B S1-1 S1-10 **FIRST FLOOR PARTIAL FLOOR PLAN** SCALE: 1/4"= 1'-0"

NOTES:
1. T/GRATING=EL.100'-0".
2. T/STEEL=EL.99'-11" U.N.O.
3. DIFFERENCE IN ELEVATION TO TYPICAL IS DENOTED [ ].
4. SEE ARCH. DWGS. FOR ADDITIONAL INFORMATION ON GRATING AND METAL FABRICATIONS.
5. (*) - DENOTES BEAM WITH HEAT SHIELD. SEE 7/S2-11.

NOTE:
ALL STEEL MEMBERS, PLATES, STUDS, GRATINGS, NUTS AND BOLTS SHOWN ON THIS SHEET SHALL BE GALVANIZED EXCEPT FOR:
A) EXPANSION ANCHORS - STAINLESS STEEL
B) 2 1/2" GRATING - PLAIN STEEL
C) 3"ø BAR PIT FIRE GRATING POST - PLAIN STEEL

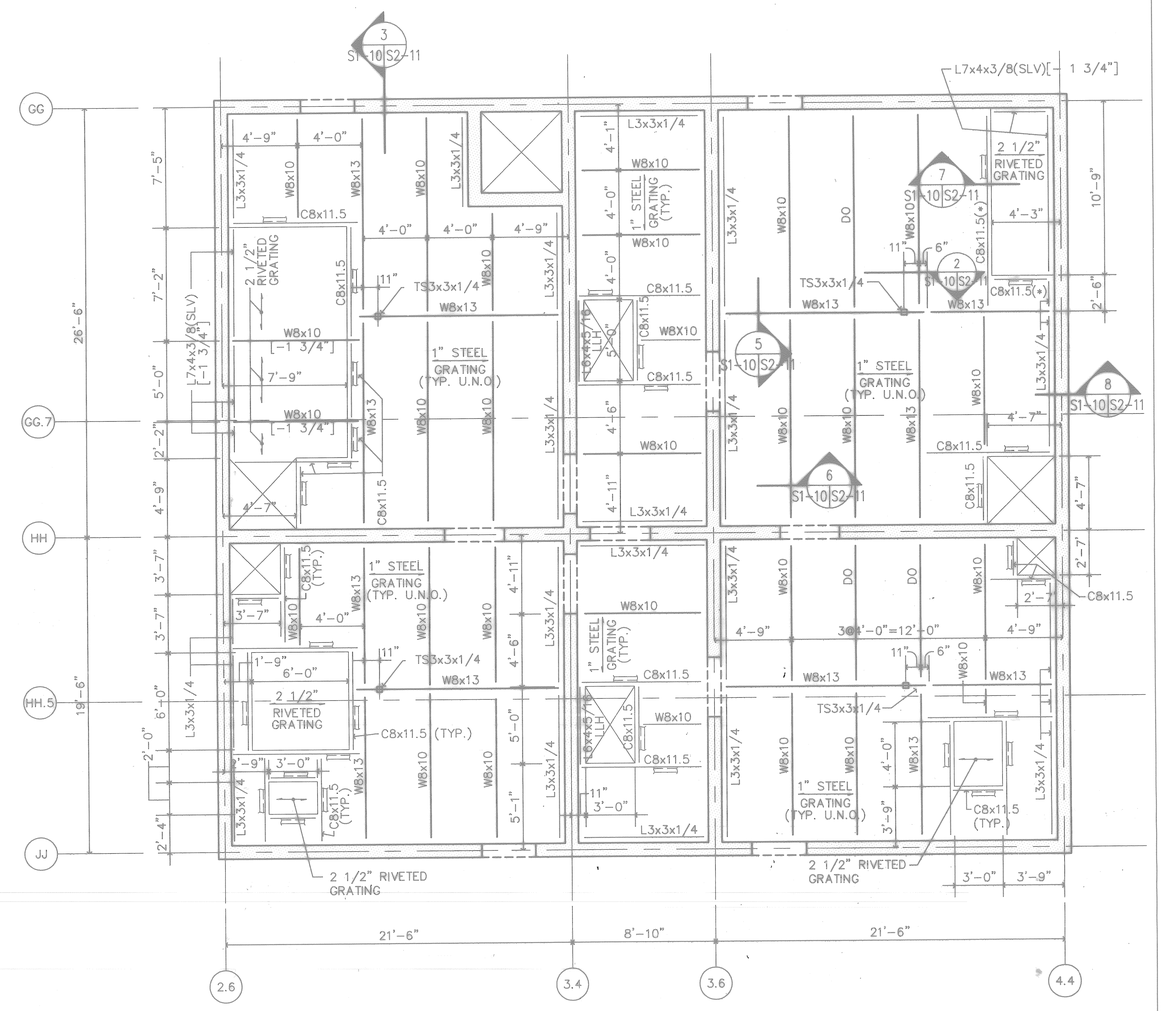

C S1-2 S1-10 **SECOND FLOOR PARTIAL FLOOR PLAN** SCALE: 1/4"= 1'-0"

GRAPHIC SCALE
5' 0' 5' 10' 15' 20' 25'
SCALE 1/8" = 1'-0"

NOTES:
1. T/GRATING=EL.116'-6".
2. T/STEEL=EL.116'-5" U.N.O.
3. DIFFERENCE IN ELEVATION TO TYPICAL IS DENOTED [ ].
4. 0" BETWEEN EDGE OF GRATING AND BACK OF CHANNEL.
5. SEE ARCH. DWGS. FOR ADDITIONAL INFORMATION ON GRATING AND METAL FABRICATIONS.
6. (*) - DENOTES BEAM WITH HEAT SHIELD. SEE 7/S2-11.

FOR OFFICIAL USE ONLY

RECORD DRAWING
DATE 06/08/98
BY ETL INITIAL

07-31-97 ISSUE CORRECTED TO AS-BUILT

Ketchum Architects Engineers Planners, Inc.
200 West Monroe Street
Chicago, IL 60606
Established 1910
Ketchum, Konkel & Associates, Inc. Company
Copyright 1997 Ketchum Architects Engineers Planners, Inc.

DSGN BUSCH DR MARSZALEK CHK SWANSON
SUPV WALKINGTON CH ENGR
SUBMITTED BY DATE
FIRM MEMBER TITLE
EIC ER HD
PPE DR
APPROVED DATE
OFFICER IN CHARGE
APPROVED DATE
EFD FOR COMMANDER, NAVFAC

ARCH. & ENGR. SEAL

DEPARTMENT OF THE NAVY
NAVAL FACILITIES ENGINEERING COMMAND
SOUTHERN DIVISION
CHARLESTON, S.C.

NAVAL TRAINING CENTER GREAT LAKES, ILLINOIS

DAMAGE CONTROL SCHOOL PARTIAL PLANS

SIZE	CODE IDENT NO.	NAVFAC DRAWING NO.	DRAWING NO.
F	80091	5276527	S1-10
SCALE 1/8=1'-0"		CONSTR. CONTR NO. N62467-93-C-1143	
		SPEC 06-93-1143	SHEET 102 OF

Date&time: 11/24/97 07:34:38 User: TWhite Filename: P:\PAPER\CHANGED\JTL\JSPS1-10

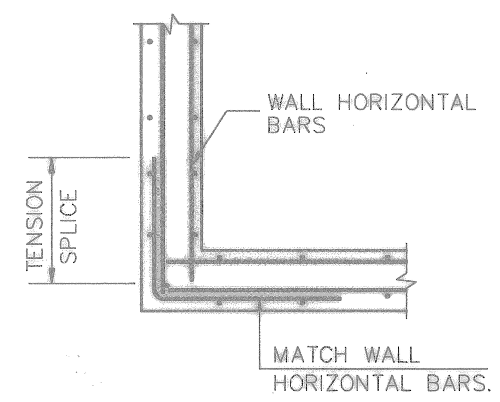

TYPICAL WALL SECTION CORNER (1 / S2-1)
SCALE: NONE

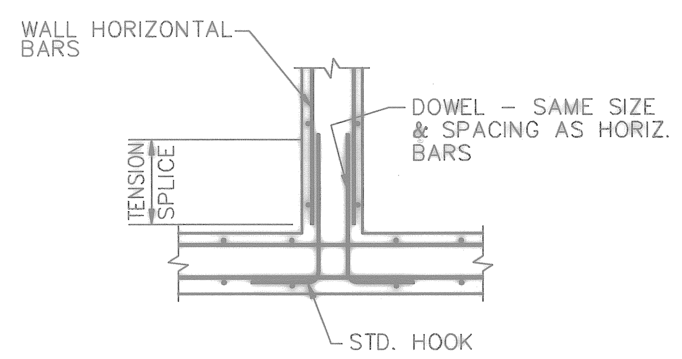

TYPICAL WALL SECTION CORNER (2 / S2-1)
SCALE: NONE

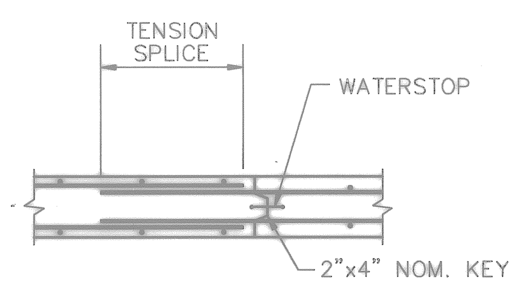

TYPICAL WALL CONSTRUCTION JOINT (3 / S2-1)
SCALE: NONE

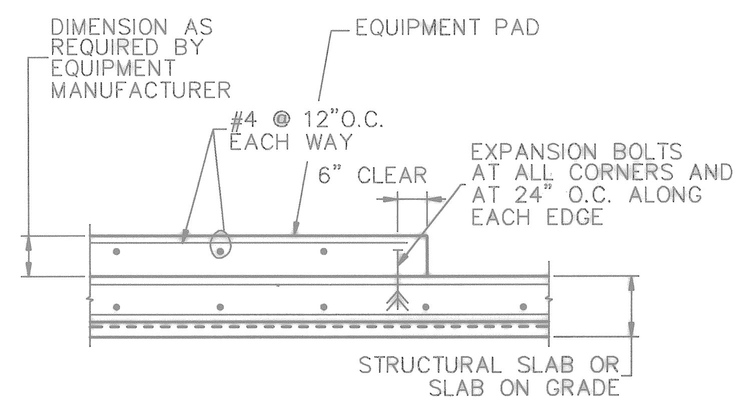

COORDINATE SIZE AND LOCATION OF PADS WITH MECHANICAL, PLUMBING AND ELECTRICAL DRAWINGS.

TYPICAL EQUIPMENT PAD DETAIL (6 / S2-1)
SCALE: NONE

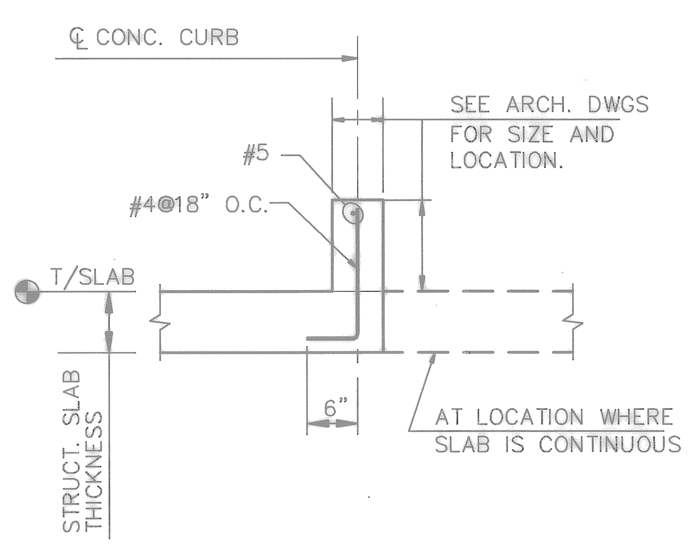

TYPICAL CONCRETE CURB DETAIL (5 / S2-1)
SCALE: NONE

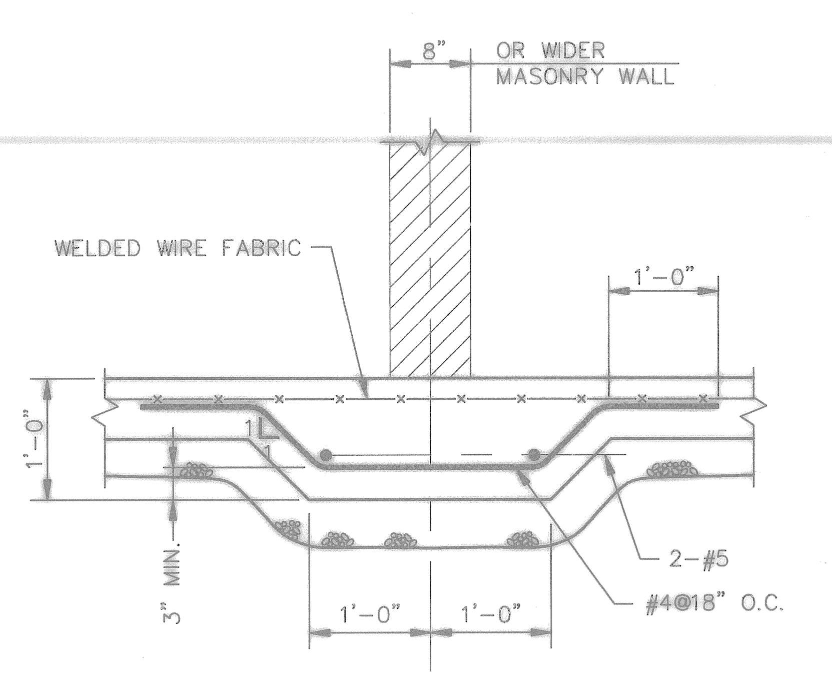

TYPICAL THICKENED FLOOR FOR MASONRY WALLS ON SLAB-ON-GRADE (7 / S1-1, S2-1, S1-5)
SCALE: NONE

MINIMUM REBAR COVER CHART

CONCRETE CAST AGAINST EARTH	3"
CONCRETE EXPOSED TO EARTH OR WEATHER OR WATER TANKS	
#5 OR SMALLER	1 1/2"
#6 OR LARGER	2"
CONCRETE NOT EXPOSED TO EARTH OR WEATHER	
BEAMS, COLUMNS, PEDESTALS	1 1/2"
SLABS, WALLS, JOISTS	
#6 OR SMALLER	3/4"
#7 OR #8	1"
#9 OR #10	1 1/4"

REBAR DETAILING CHART

REBAR SIZE	MINIMUM SPACING (IN.)	TENSION SPLICE (IN.)		COMP. SPLICE (IN.)	STANDARD 90° HOOKS	
		TOP BARS	OTHERS		MINIMUM EMBEDMENT	LENGTH (IN.)
4000 psi, NLWT. CONCRETE, GRADE 60 BARS						
#3	1.5	18	16	12	6	6
#4	2.0	24	19	15	7	8
#5	2.5	30	23	19	9	10
#6	3.0	36	28	23	10	12
#7	3.5	42	33	26	12	14
#8	4.0	51	39	30	14	16
#9	4.5	64	50	34	15	19
4000 psi, LTWT. CONCRETE, GRADE 60 BARS						
#3	1.5	23	21	12	7	6
#4	2.0	31	25	15	9	8
#5	2.5	39	30	19	11	10
#6	3.0	47	36	23	13	12
#7	3.5	55	43	26	15	14
#8	4.0	66	51	30	18	16
#9	4.5	83	65	34	20	19

NOTES:
1. DOES NOT APPLY TO #6 BARS OR LARGER IN OUTSIDE LAYERS WITH COVER < 2 BAR DIAMETERS.
2. COVER > 1 BAR DIAMETER.
3. TOP BARS ARE HORIZONTAL BARS WITH > 12" CONCRETE CAST BELOW.
4. IF CONDITIONS IN CHART DO NOT APPLY, USE ACI 318., CLASS B TENSION LAP SPLICE.
5. SPACING OF SPLICED BARS IN NONCONTACT LAP SPLICE TO BE < 6" AND < 1/5 SPLICE LENGTH.
6. ALL SPLICES ARE TO BE TENSION SPLICES UNLESS INDICATED ON DRAWINGS AS COMPRESSION SPLICE.
7. WHEN BARS OF DIFFERENT SIZE ARE LAP SPLICED, THE SPLICE LENGTH SHALL BE AS TABULATED FOR THE SMALLER BAR.

STRUCTURAL NOTES

A. GENERAL

1. CONTRACTOR SHALL COORDINATE AND REFER TO THE ARCHITECTURAL, MECHANICAL AND ELECTRICAL DRAWINGS FOR THE LOCATION AND SIZE OF OPENINGS, SIZE OF EQUIPMENT, ANCHOR BOLTS, PLATES AND OTHER MISCELLANEOUS ITEMS BEFORE FABRICATION OF STRUCTURAL STEEL BEAMS OR PLACING OF CONCRETE. USE CERTIFIED MANUFACTURERS DRAWINGS FOR COORDINATION.
2. SEE ARCHITECTURAL DRAWINGS FOR DIMENSIONS AND ELEVATIONS NOT SHOWN.
3. DETAILS, SECTIONS AND NOTES SHOWN ON THE DRAWINGS ARE INTENDED TO BE TYPICAL AND SHALL APPLY TO SIMILAR SITUATIONS UNLESS OTHERWISE NOTED.

B. DESIGN CRITERIA

1. BUILDING DATUM 100'-0" = GREAT LAKES NTC DATUM 91.5'.
2. DESIGN SOIL BEARING CAPACITY IS 3000 PSF FOR THE PROPANE TANK FOUNDATIONS AND 4000 PSF FOR ALL OTHER FOUNDATIONS AND IS TO BE VERIFIED BY INSPECTION AND TESTING AGENCY.
3. ROOF SNOW LOAD: 25 PSF PLUS DRIFTING.
4. LATERAL LOADS

A. WIND	V = 83mph
LATERAL SYSTEM–FFT	26 psf
LATERAL SYSTEM–DCT & SUPPORT BLDG	25 psf
B. SEISMIC	ZONE 1, Z=0.075 I=1.0, Rw=6
LATERAL SYSTEM	V=0.0344W
PARAPETS & APPENDAGES	Fp=0.15 Wp
OTHER COMPONENTS	Fp=0.056 Wp

5. LIVE LOADS

A. FIRE FIGHTING TRAINER (FFT)	
TRAINING FLOORS	100 psf
CRAWL SPACES	100
MECHANICAL OR STORAGE	150
CORRIDORS OR STAIRS	100
COMPUTER ROOMS	110
MECHANICAL EQUIPMENT ON ROOF	150
B. SUPPORT BUILDING	
LEVEL 1	100psf
RECEIVING & STORAGE	150
LEVEL 2	60
LEVEL 2 CORRIDOR	80
C. DAMAGE CONTROL TRAINER (DCT)	
LEVEL 2	80 psf
LEVEL 3	100
INTERIOR ROOFS	20
MECHANICAL ROOM	150
DAMAGE CONTROL TRAINER DECKS	20 + 250 psf WATER

C. EXCAVATION

1. BACKFILL SHALL BE AN APPROVED MATERIAL FREE OF ORGANIC MATTER AND DEBRIS, AND SHALL BE PLACED IN LAYERS NOT TO EXCEED 8 INCHES IN THICKNESS.
2. BACKFILL SHALL BE COMPACTED TO A MINIMUM OF 95% OF MAXIMUM DRY DENSITY IN ACCORDANCE WITH ASTM D-1557.
3. FIRST FLOOR FRAMING, DECKING & CONCRETE SHALL BE PLACED PRIOR TO BACKFILLING AGAINST BASEMENT WALLS.

D. CONCRETE

1. CONCRETE WORK SHALL BE IN ACCORDANCE WITH AMERICAN CONCRETE INSTITUTE "BUILDING CODE REQUIREMENTS FOR REINFORCED CONCRETE" (ACI 318-89) (R 1992) AND "SPECIFICATION FOR STRUCTURAL CONCRETE FOR BUILDINGS" (ACI 301-89).
2. CONCRETE AND CONCRETE TOPPING IN FIRE FIGHTING TRAINER ABOVE EL 100'-0" SHALL HAVE A SPECIFIED F'C = 4,000 PSI AT 28 DAYS AND SHALL BE LIGHTWEIGHT (115 PCF) AND HEAT RESISTANT. CONCRETE ON METAL DECK SHALL BE LIGHTWEIGHT (115 PCF) AND HAVE A SPECIFIED COMPRESSIVE STRENGTH F'C = 4000 PSI. ALL OTHER CONCRETE SHALL BE NORMAL WEIGHT AND HAVE A SPECIFIED COMPRESSIVE STRENGTH f'c = 4,000 PSI AT 28 DAYS. (A)
3. ALL EXTERIOR CONCRETE SHALL BE AIR-ENTRAINED AND HAVE A MAXIMUM WATER CEMENT RATIO OF 0.50.
4. CONCRETE FOR PROCESS AND WASTE WATER TANKS (MAT FOUNDATION AND WALLS) SHALL BE AIR ENTRAINED, AND SHALL HAVE A MAXIMUM WATER/CEMENT RATIO OF 0.45.
5. REINFORCING STEEL SHALL COMPLY WITH ASTM A615 GRADE 60.
6. WELDED WIRE FABRIC SHALL COMPLY WITH ASTM A185.
7. THE FOLLOWING MASONRY WALLS ARE CANTILEVERED FROM THE CONCRETE FLOOR SLABS. SEE SECTION 13/A8-3 FOR REINFORCING BARS AND ARCHITECTURAL DRAWINGS FOR LOCATION:

COLUMN LINE	D/6 TO 17, 1F, 2F, 3F	1st, 2nd, & 3rd FLOORS
	D/17 TO 19, 3F.	3rd FLOOR
	F/18 TO 21, 3F.	3rd FLOOR

E. STRUCTURAL STEEL

1. STRUCTURAL STEEL WORK SHALL COMPLY WITH "AISC MANUAL OF STEEL CONSTRUCTION", 9TH EDITION.
2. THE STEEL FRAME FOR THIS BUILDING IS CLASSIFIED AS NON-SELF SUPPORTING AND REQUIRES INTERACTION WITH OTHER COMPONENTS TO PROVIDE LATERAL STABILITY. THE CONTRACTOR SHALL DESIGN AND PROVIDE ADEQUATE TEMPORARY BRACING TO RESIST THE WIND LOADS SHOWN ON THE DRAWINGS. THE TEMPORARY BRACING SHALL REMAIN IN PLACE UNTIL THE PERMANENT BRACING, CONCRETE WALLS, MASONRY SHEAR WALLS, STEEL ROOF AND FLOOR DECK DIAPHRAGMS, ARE INSTALLED AND ALL FINAL CONNECTIONS HAVE BEEN COMPLETED.
3. STRUCTURAL STEEL EXCEPT AS NOTED BELOW SHALL BE ASTM A36.
4. BOLTS SHALL BE 7/8" DIAMETER IN ACCORDANCE WITH ASTM A325, SLIP CRITICAL TYPE UNLESS NOTED AS SNUGTIGHT ON DRAWINGS..
5. ANCHOR BOLTS SHALL BE A36 THREADED ROD WITH HEAVY HEX HEAD NUTS.
6. WELDING SHALL BE PERFORMED BY CERTIFIED WELDERS USING E70XX ELECTRODES AND SHALL CONFORM TO AWS D1.1 "STRUCTURAL WELDING CODE – STEEL".
7. STEEL TUBE COLUMNS SHALL BE ASTM A500, GRADE B.
8. STEEL PIPE COLUMNS SHALL BE ASTM A501 OR ASTM A53, TYPE E OR S, GRADE B.
9. STEEL SLOPES UNIFORMLY BETWEEN HIGH POINT AND LOW POINT.

F. STEEL DECK

1. STEEL DECK WORK SHALL COMPLY WITH THE STEEL DECK INSTITUTE, "DESIGN MANUAL FOR COMPOSITE DECKS, FORM DECKS AND ROOF DECKS".
2. FOR COMPOSITE STEEL DECK SEE SCHEDULE ON S3-7.
3. HANGERS SHALL NOT BE ATTACHED TO THE METAL DECK.
4. SHEAR STUDS SHALL BE 3/4 INCH DIAMETER 3 INCH LONG HEADED STUDS, ASTM A108 GRADE 1015 OR 1020.

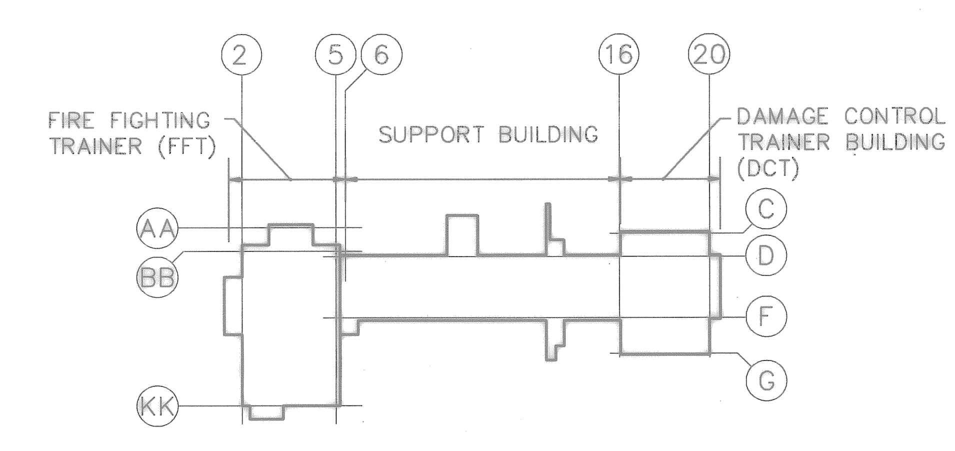

KEY PLAN

FOR OFFICIAL USE ONLY

RECORD DRAWING
DATE 06/08/98

REV	DATE	ISSUE	BY	INITIAL
A	07-31-97	CORRECTED TO AS-BUILT	JTL	

Knight Architects Engineers Planners, Inc.
549 West Randolph Street
Chicago, IL 60661
Established in 1945
A Lester B. Knight & Associates, Inc. Company
© Copyright 1994 Knight Architects Engineers Planners, Inc.

DEPARTMENT OF THE NAVY — NAVAL FACILITIES ENGINEERING COMMAND
SOUTHERN DIVISION
CHARLESTON, S.C.

NAVAL TRAINING CENTER — GREAT LAKES, ILLINOIS

DAMAGE CONTROL SCHOOL
STRUCTURAL NOTES AND TYPICAL DETAILS

DSGN BUSCH DR MARSZALEK CHK SWANSON
SUPV WALKINGTON CH ENGR
SUBMITTED BY — DATE
FIRM MEMBER TITLE
EIC — BR HD
FPE — DIR
APPROVED — DATE
OFFICER IN CHARGE
APPROVED — DATE
EFD FOR COMMANDER, NAVFAC
ARCH. & ENGR. SEAL

SIZE	CODE IDENT NO.	NAVFAC DRAWING NO.	DRAWING NO.
F	80091	5276528	S2-1
		CONSTR CONTR NO. N62467-93-C-1143	
SCALE AS NOTED		SPEC 06-93-1143	SHEET 103 OF

Date&time: 10/30/97 14:36:16 User: TWhite Filename: P:\PAPER\CHANGED\JTL\JSPS2-01

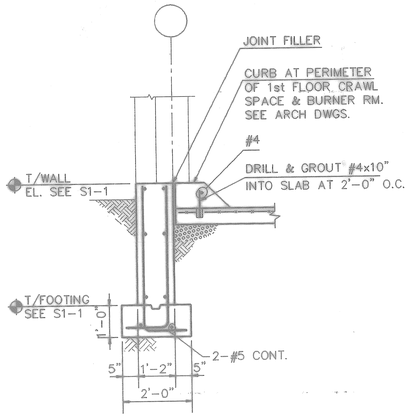

WALL FOOTING AND COLUMN (1 / S1-1 S2-2)
SCALE: 1/2" = 1'-0"

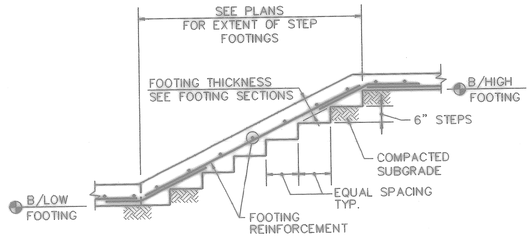

STEPPED FOOTING (2 / S1-1 S2-2 / S1-5 / S1-6)
SCALE: 1/2" = 1'-0"

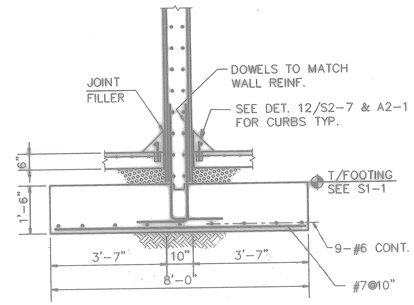

WALL FOOTING (3 / S1-1 S2-2)
SCALE: 1/2" = 1'-0"

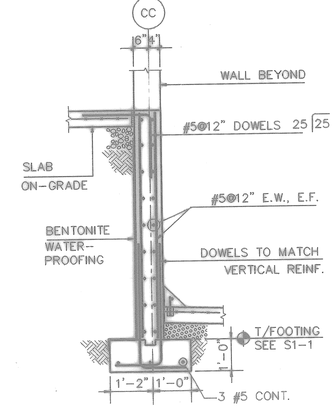

SECTION (4 / S1-1 S2-2)
SCALE: 1/2" = 1'-0"

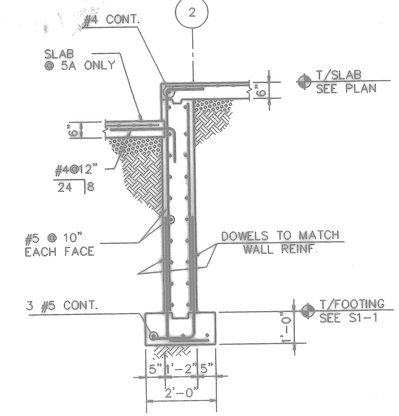

WALL FOOTING (5,5A / S1-1 S2-2)
SCALE: 1/2" = 1'-0"

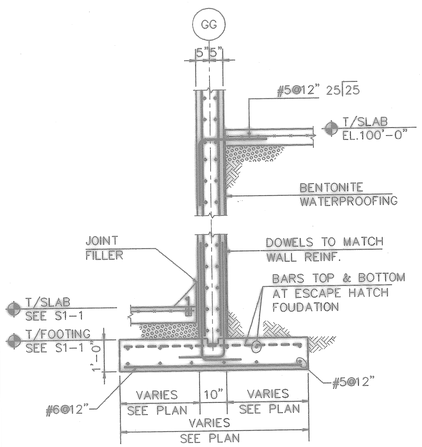

WALL FOOTING AND UPPER SLAB (6 / S1-1 S2-2 / S1-2)
SCALE: 1/2" = 1'-0"

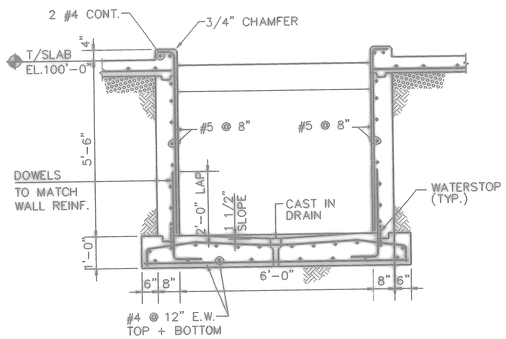

PIT FOUNDATION (7 / S1-1 S2-2)
SCALE: 1/2" = 1'-0"

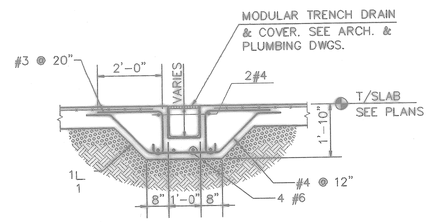

TRENCH DRAIN AT GRADE (8 / S1-1 S2-2)
SCALE: 1/2" = 1'-0"

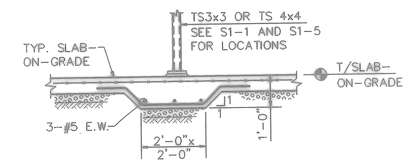

THICKENED SLAB AT POST (9 / S1-1 S2-2 / S1-5)
SCALE: 1/2" = 1'-0"

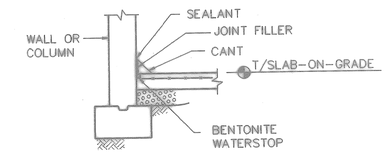

TYPICAL WALL ISOLATION JOINT (10 / S1-1 S2-2)
SCALE: NONE

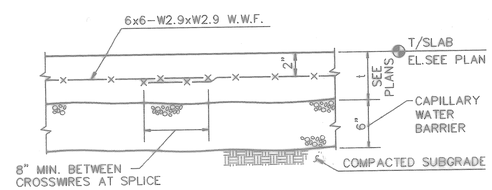

TYPICAL SLAB-ON-GRADE (11 / S1-1 S2-2)
SCALE: NONE

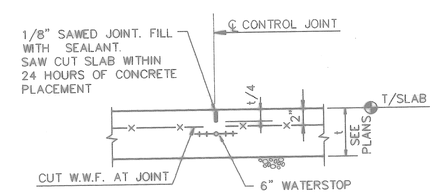

NOTE:
PROVIDE CONTROL JOINTS AS SHOWN AT PLANS AND AT MAXIMUM SPACING OF 36t.

TYPICAL SLAB ON GRADE CONTROL JOINT (12 / S1-1 S2-2)
SCALE: NONE

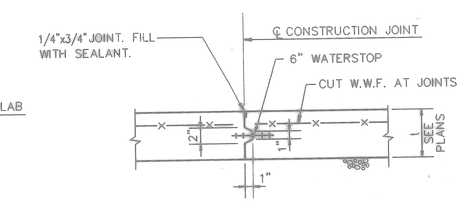

TYPICAL SLAB ON GRADE CONSTRUCTION JOINT (13 / S1-1 S2-2)
SCALE: NONE

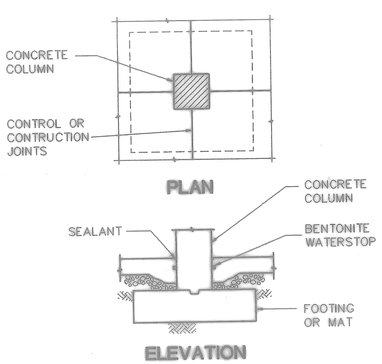

TYPICAL COLUMN ISOLATION JOINT (14 / S1-1 S2-2)
SCALE: NONE

FOR OFFICIAL USE ONLY

RECORD DRAWING
DATE 06/08/98

DATE 07-31-97 REMARK AS-BUILT, NO CORRECTIONS BY ____ APPROVAL ____ NO. ___

Knight Architects Engineers Planners, Inc.
500 West Randolph Street
Chicago, IL 60661
Established in 1910
A Lester B. Knight & Associates, Inc. Company
©Copyright 1994 Knight Architects Engineers Planners, Inc.

DSGN BUSCH CHK MARSZALEK CHK SWANSON
SUPV WALKINGTON ENGR
SUBMITTED BY DATE
JOHN WALKINGTON
CIC ____ DIR ____
EPE ____ DIR ____

STATE OF ILLINOIS
RONALD E. WALKINGTON
01-3542
CHICAGO, ILLINOIS
REGISTERED STRUCTURAL ENGINEER

DEPARTMENT OF THE NAVY — NAVAL FACILITIES ENGINEERING COMMAND
SOUTHERN DIVISION
CHARLESTON, S.C.

NAVAL TRAINING CENTER — GREAT LAKES, ILLINOIS

DAMAGE CONTROL SCHOOL
FIREFIGHTING TRAINER
FOUNDATION SECTIONS

Filename: P:\PAPER\JSPS2-02 OJ - PLOTPUMP 08/17/94 15:27:02

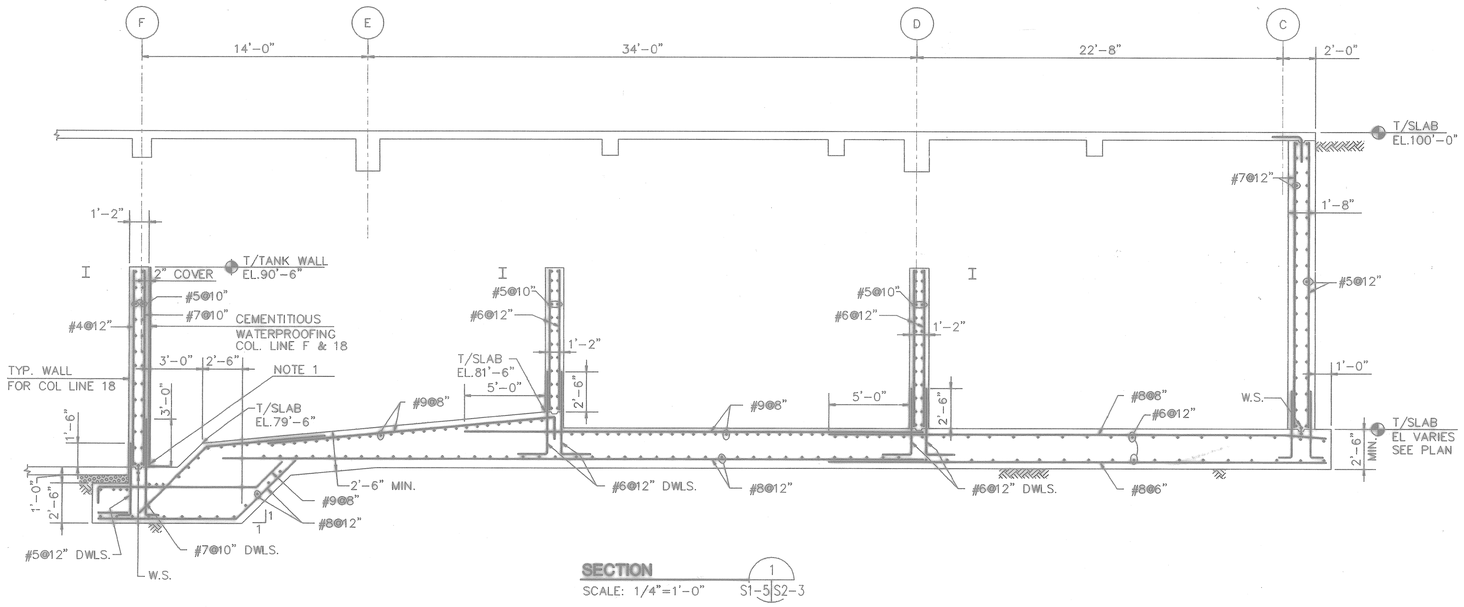

SECTION 1

SCALE: 1/4"=1'-0" S1-5 S2-3

NOTES:

1. 1"x1" REGLET FOR HORIZ. & VERT. CONSTRUCTION JOINTS. FILL WITH CEMENTITIOUS WATERPROOFING PATCHING COMPOUND.

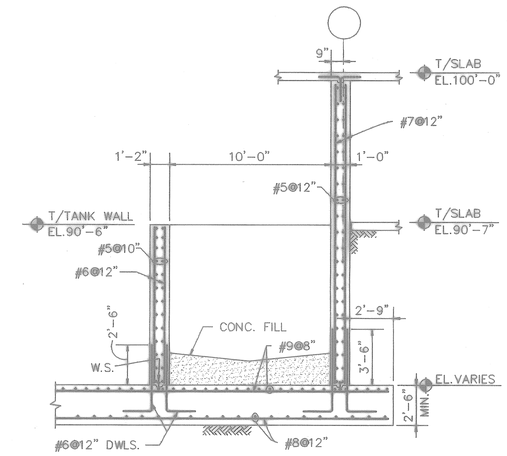

SECTION 2

SCALE: 1/4"=1'-0" S1-5 S2-3

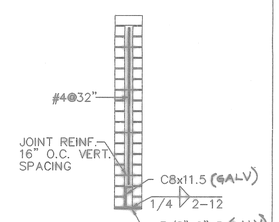

TYP. SCREEN WALL SECTION

SCALE: 1/2"=1'-0" 10 A4-7 S2-3

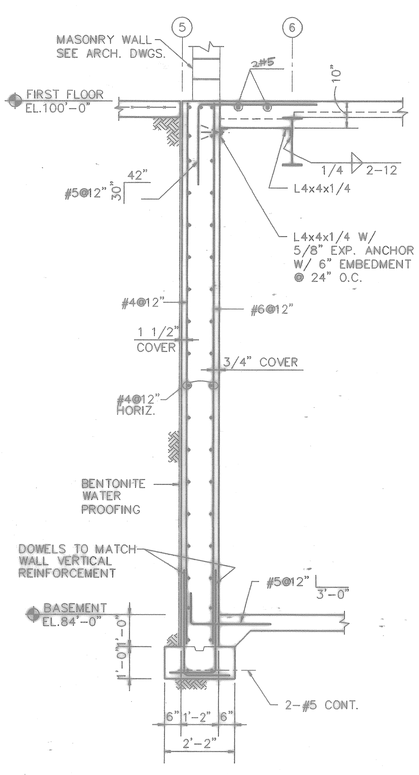

FOUNDATION WALL-COL. LINE 5

SCALE: 1/2"=1'-0" 3 S2-3

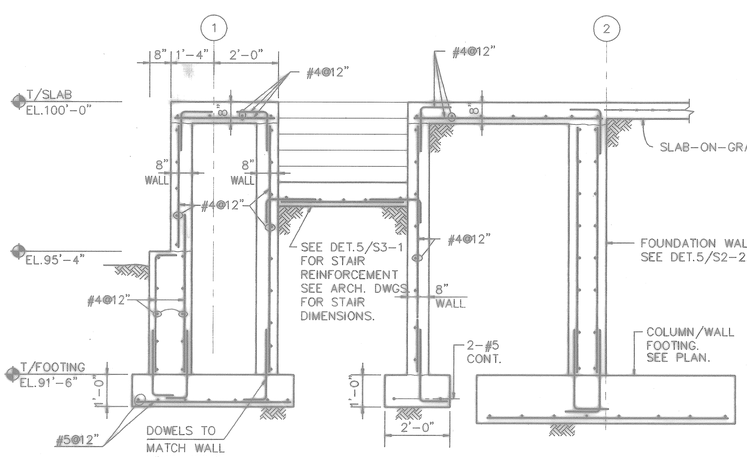

SECTION AT STAIR & LANDING

SCALE: 1/2=1'-0" 4 S1-1 S2-3

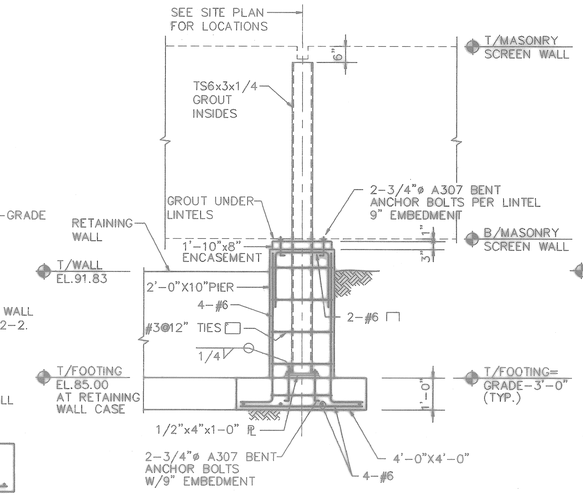

ISOLATED SCREEN WALL SUPPORT

SCALE: 1/2"=1'-0" 7 A4-7 S2-3

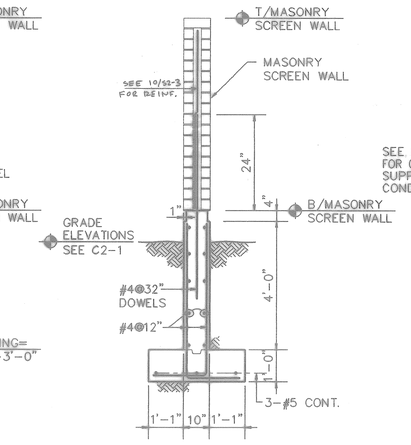

CONTINUOUS SCREEN WALL SUPPORT

SCALE: 1/2"=1'-0" 8 A4-7 S2-3

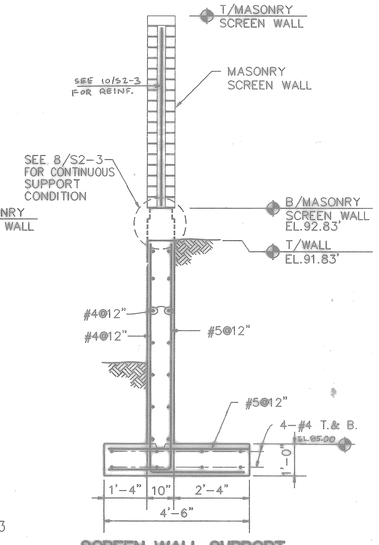

SCREEN WALL SUPPORT-RETAINING WALL CONDITION

SCALE: 1/2"=1'-0" 9 A4-7 S2-3

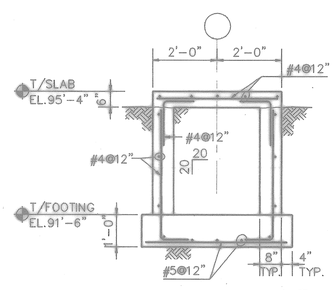

WALL FOUNDATION

SCALE: 1/2=1'-0" 5 S1-1 S2-3

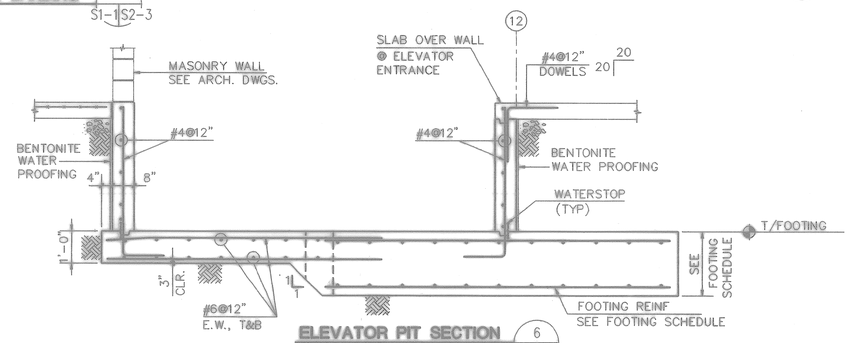

ELEVATOR PIT SECTION

SCALE: 1/2"=1'-0" 6 S1-5 S2-3

STATE OF ILLINOIS
RONALD E. WALKINGTON
81-3542
CHICAGO, ILLINOIS
STRUCTURAL ENGINEER
Ronald E. Walkington
EXP 11-30-94
6-31-94
ARCH. & ENGR. SEAL

FOR OFFICIAL USE ONLY

RECORD DRAWING
DATE 9/10/98

0	DATE 07-31-97	BY	DRWN AS-BUILT, NO CORRECTIONS

Kaplan Architects Engineers Planners, Inc.
549 West Randolph Street
Chicago, IL 60661
Telephone: 312-902-1000
Kaplan & Kaplan & associates, Inc. Company
© Copyright, 1997 Kaplan Architects Engineers Planners, Inc.

DSGN BUSCH DR MARSZALEK CHK SWANSON
SUPV WALKINGTON CH ENGR
SUBMITTED BY DATE
DIVISION HEADER ENGR
EIC DR NO.
FPE DR
APPROVED DATE
OFFICIAL CHARGE
APPROVED DATE 9/10/98
CO FOR COMMANDER NAVFAC

DEPARTMENT OF THE NAVY — NAVAL FACILITIES ENGINEERING COMMAND
SOUTHERN DIVISION
CHARLESTON, S.C.
NAVAL TRAINING CENTER — GREAT LAKES, ILLINOIS

DAMAGE CONTROL SCHOOL FIREFIGHTING TRAINER FOUNDATION SECTIONS

SIZE	CODE IDENT NO.	NAVFAC DRAWING NO.	DRAWING NO.
F	80091	5276530	S2-3
		CONSTR CONTR NO. N62467-93-C-1143	
SCALE AS NOTED		SPEC 08-93-1143	SHEET 105 OF

Filename: P:\PAPER\JSPS2-03
User: GJM
Date&time: 08/18/94 15:04:26

P: TB-GCX PS	Size=0.0	
P: TB-NOST PS	Size=0.0	
P: JSPS2-03 PS	Size=0.0	
P: JSPS2-03 MS	Size=0.0	

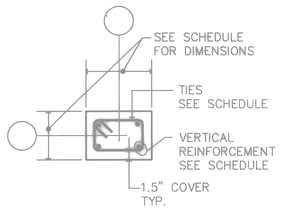

SEE PLAN FOR COLUMN ORIENTATION AND OFFSETS IF ANY

FC1 COLUMN (1 / S2-4 S2-4)
SCALE: N.T.S

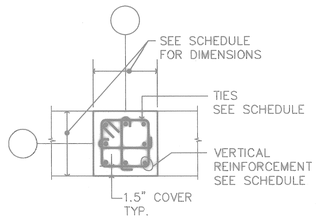

SEE PLAN FOR COLUMN ORIENTATION AND OFFSETS IF ANY

FC2 COLUMN (2 / S2-4 S2-4)
SCALE: N.T.S

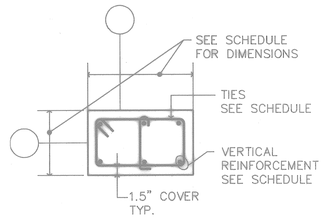

SEE PLAN FOR COLUMN ORIENTATION AND OFFSETS IF ANY

FC3 COLUMN (3 / S2-4 S2-4)
SCALE: N.T.S

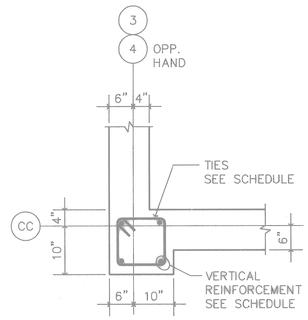

FC4 COLUMN (4 / S2-4 S2-4)
SCALE: 3/4"=1'-0"

FIRE FIGHTING TRAINER COLUMN SCHEDULE

A DTL. 5 S2-4 / SCREEN WALL	GG.7-2 GG.7-5 HH.5-2 HH.5-5 KK-3.6 KK-4.3	FF-2 FF-5 KK-2 KK-5	FF-3 FF-4	KK-3.3	KK-2.3 LL-2.3 LL-3.3 EE-4 EE-5	DD-2 DD-5	CC-1 DD.9-1 GG-1	CC-2 CC-5	CC-3 CC-4	BB-2 BB-5	AA-3 AA-4	FF-4.4	DD-3 DD-4
COLUMN SIZE VERTICAL BARS STIRRUPS & TYPE / ROOF LEVEL	16"x24" 6#8 #4@16" FC3	16"x16" 4#8 #4@16" FC1	16"x16" 8#8 #4@16" FC2	16"x16" 8#8 #4@16" FC2					16"x14" 4#8 #4@14" FC4				
3rd FLOOR	16"x24" 6#8 #4@16" FC3	16"x16" 4#8 #4@16" FC1	16"x16" 8#8 #4@16" FC2	16"x16" 8#8 #4@16" FC2	12"x16" 6#6 #4@12" FC3		STEEL COLUMN SEE D/S2-6	STEEL COLUMN SEE A/S2-6	16"x14" 4#8 #4@14" FC4				
2rd FLOOR	12"x24" 4#8 #4@12" FC1	16"x16" 4#8 #4@16" FC1	12"x16" 6#8 #4@12" FC3	12"x16" 6#8 #4@12" FC3	12"x16" 6#6 #4@12" FC3		STEEL COLUMN SEE D/S2-6	16"x16" 4#8 #4@16" FC1	16"x14" 4#8 #4@14" FC4	16"x16" 4#8 #4@16" FC1			
1st FLOOR OR CRAWL	12"x24" 4#8 #4@12" FC1	16"x16" 4#8 #4@16" FC1	16"x16" 6#8 #4@16" FC3	12"x16" 6#8 #4@12" FC3	12"x16" 6#6 #4@12" FC3	16"x16" 4#8 #4@16" FC1	16"x16" 4#8 #4@16" FC1	16"x16" 4#8 #4@16" FC1	16"x14" 4#8 #4@14" FC4	16"x16" 4#8 #4@16" FC1	16"x16" 4#8 #4@16" FC1	12"x12" 4#7 #4@12" FC1	16"x16" 8#9 #4@16" FC2
NOTES													

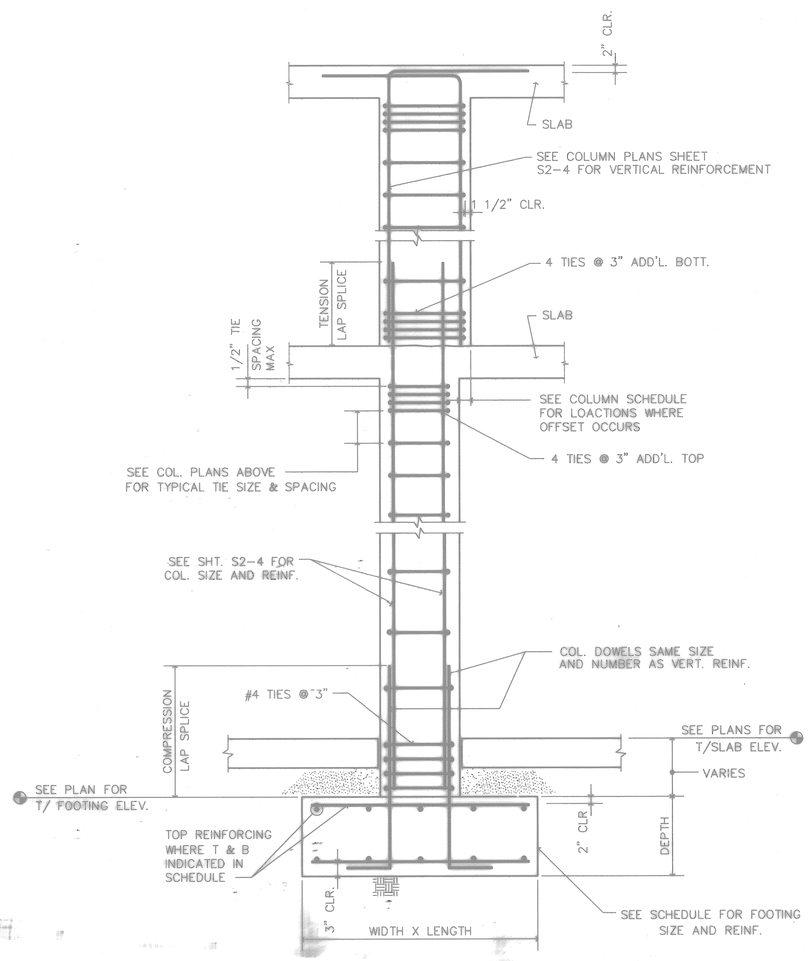

TYPICAL CONCRETE COLUMN AND SPREAD FOOTING (9 / S2-4)
SCALE: NONE

FOOTING SCHEDULE

MARK	SIZE WIDTH	SIZE LENGTH	SIZE DEPTH	REINFORCEMENT SHORT DIRECTION	REINFORCEMENT LONG DIRECTION
F3	3'-0"	3'-0"	1'-0"	4-#6	4-#6
F4	4'-0"	4'-0"	1'-0"	5-#6	5-#6
F4.5	4'-6"	4'-6"	1'-2"	5-#6	5-#6
F5	5'-0"	5'-0"	1'-0"	6-#6	6-#6
F6	6'-0"	6'-0"	1'-0"	8-#6	8-#6
F6.5	6'-6"	6'-6"	1'-2"	7-#6	7-#6
F7	7'-0"	7'-0"	1'-4"	7-#6	7-#6
F8	8'-0"	8'-0"	1'-6"	7-#8	7-#8
F8.5	8'-6"	8'-6"	1'-8"	10-#8	10-#8 T & B @ EE-5
F10	10'-0"	10'-0"	1'-10"	9-#8	9-#8
F11	11'-0"	11'-0"	2'-2"	10-#8	10-#8
F11A	11'-0"	11'-0"	2'-0"	13-#8	13-#8
F11/7	11'-0"	7'-0"	1'-6"	11-#7 T & B	7-#7 T & B
F11/9	11'-0"	9'-0"	1'-4"	10-#8 T & B	8-#8 T & B
F11/10	11'-0"	10'-0"	1'-10"	14-#8 T & B	13-#8 T & B
F13/7	13'-0"	7'-0"	1'-8"	14-#8B 14-#6T	9-#9B 8-#6T
F13/9	13'-0"	9'-0"	1'-10"	16-#8 T & B	11-#8 T & B
F20/14.5	20'-0"	14'-6"	1'-10"	16-#10 T & B	14-#10 T & B
F12	12'-0"	12'-0"	2'-0"	14-#8	14-#8
F5.5/7	5'-6"	7'-0"	1'-4"	8-#6	7-#6
F5.5/9	5'-6"	9'-0"	1'-6"	13-#7	7-#7

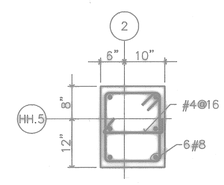

COLUMN HH.5-2 ABOVE 3RD FLOOR

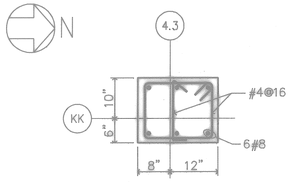

COLUMN KK-4.3 ABOVE 3RD FLOOR

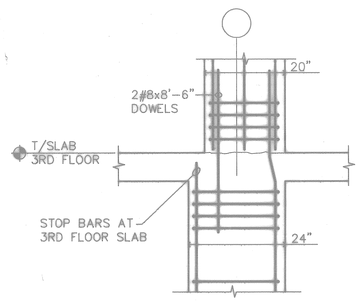

SECTION AT COLUMN CHANGE

COLUMNS HH.5-2, KK-4.3 16"x20" COL. ABOVE 3RD FLOOR (A / 5 / S2-4 S2-4)

FOR OFFICIAL USE ONLY

RECORD DRAWING
DATE 06/08/98
SAD 06/25/98

07-31-97 ISSUE CORRECTED TO AS-BUILT BY JDL INITIAL

Knight Architects Engineers Planners, Inc.
549 West Randolph Street
Chicago, IL 60661
Established in 1945
A Lester B. Knight & Associates, Inc. Company
©Copyright 1994 Knight Architects Engineers Planners, Inc.

DEPARTMENT OF THE NAVY
NAVAL FACILITIES ENGINEERING COMMAND
SOUTHERN DIVISION
CHARLESTON, S.C.

DSDR BUSCH DR MARSZALEK CHK SWANSON
SUP WALKINGTON CH ENGR
SUBMITTED BY DATE
FIRM MEMBER TITLE
ENC BR HD
FPE DIR
APPROVED DATE
OFFICER IN CHARGE
APPROVED DATE
EFD FOR COMMANDER, NAVFAC

NAVAL TRAINING CENTER GREAT LAKES, ILLINOIS

DAMAGE CONTROL SCHOOL
FIREFIGHTING TRAINER
FOOTINGS AND COLUMNS

SIZE	CODE IDENT NO.	NAVFAC DRAWING NO.	DRAWING NO.
F	80091	5276531	S2-4
		CONSTR CONTR NO. N62467-93-C-1143	
SCALE AS NOTED		SPEC 06-93-1143	SHEET 106 OF

ARCH. & ENGR. SEAL

Date&time: 11/24/97 07:36:32 User: TWhite Filename: P:\PAPER\CHANGED\JTL\JSPS2-04

106

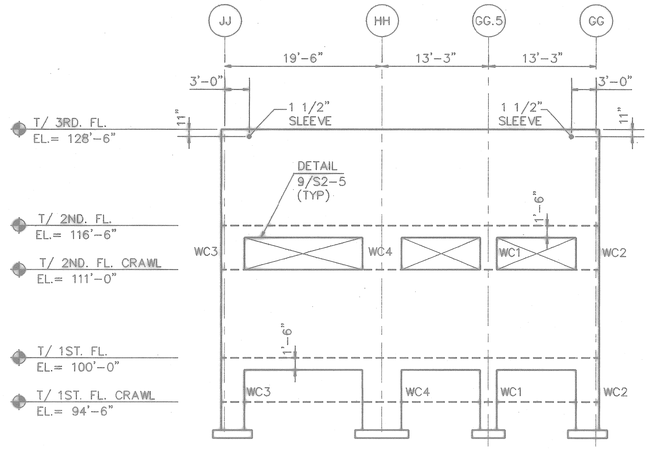

WALL ELEVATION - COL. LINE 2.6 (A)
SCALE: 1/8"=1'-0" S2-5/S2-5

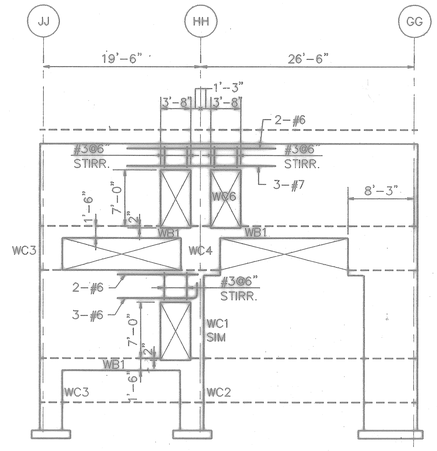

WALL ELEVATION - COL. LINE 3.4 (B)
SCALE: 1/8"=1'-0" S2-5/S2-5

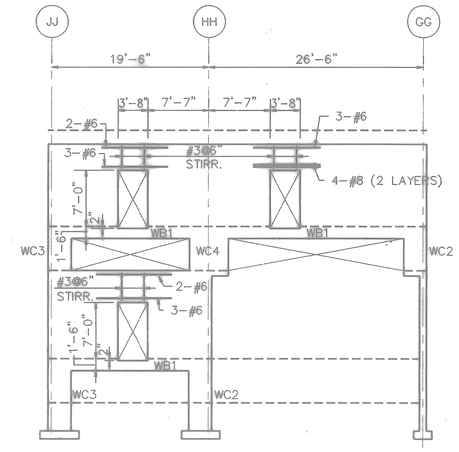

WALL ELEVATION - COL. LINE 3.6 (C)
SCALE: 1/8"=1'-0" S2-5/S2-5

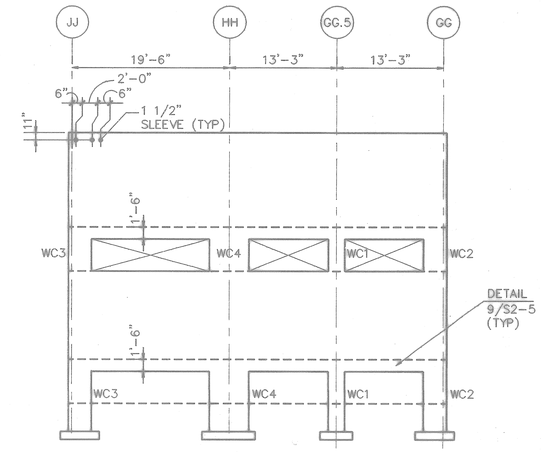

WALL ELEVATION - COL. LINE 4.4 (D)
SCALE: 1/8"=1'-0" S2-5/S2-5

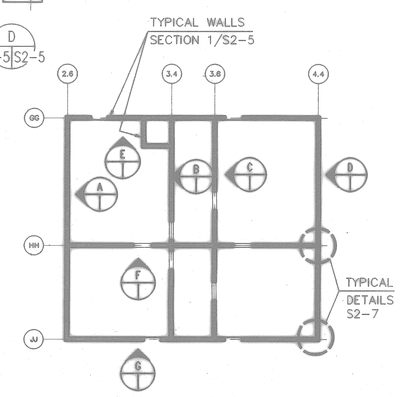

WALL KEY PLAN (H)
S1-1/S2-5
S1-2

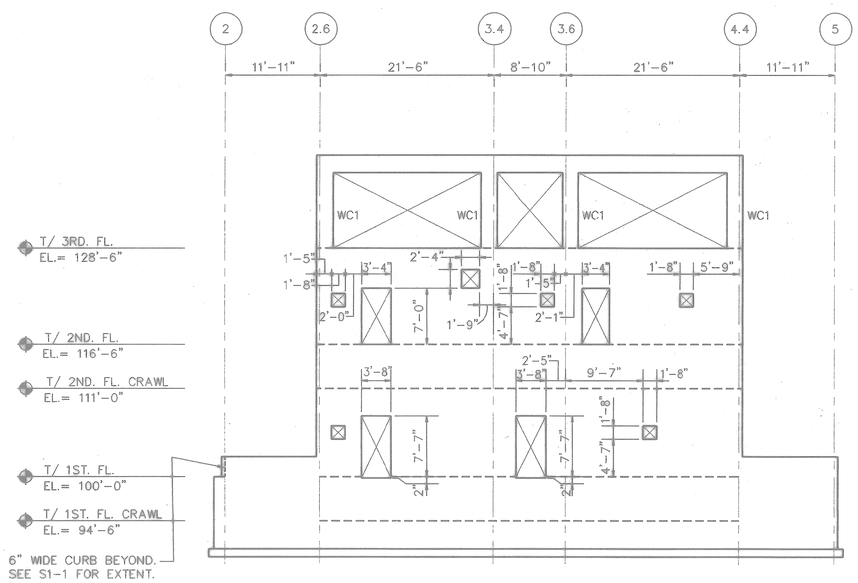

WALL ELEVATION - COL. LINE GG (E)
SCALE: 1/8"=1'-0" S2-5/S2-5

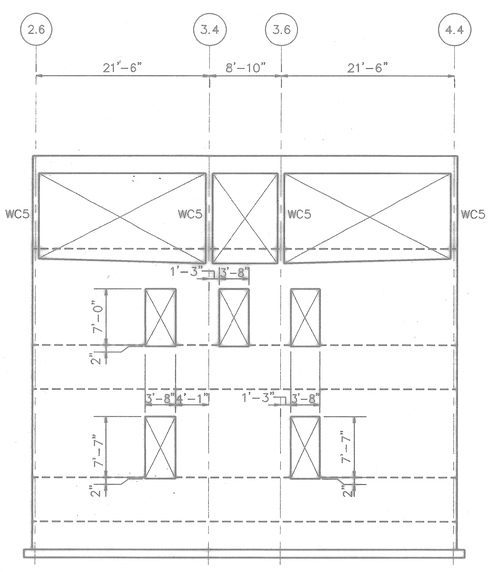

WALL ELEVATION - COL. LINE HH (F)
SCALE: 1/8"=1'-0" S2-5/S2-5

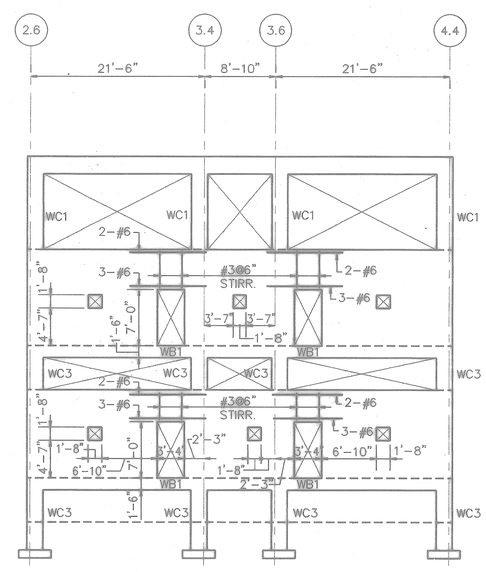

WALL ELEVATION - COL. LINE JJ (G)
SCALE: 1/8"=1'-0" S2-5/S2-5

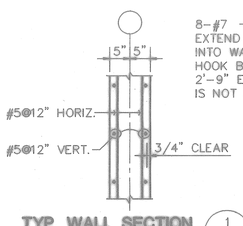

TYP. WALL SECTION (1)
SCALE: 3/4"=1'-0" S2-5/S2-5

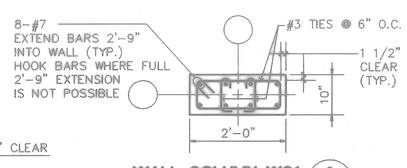

WALL COLUMN WC1 (3)
SCALE: 3/4"=1'-0" S2-5/S2-5

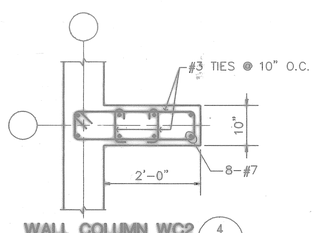

WALL COLUMN WC2 (4)
SCALE: 3/4"=1'-0" S2-5/S2-5

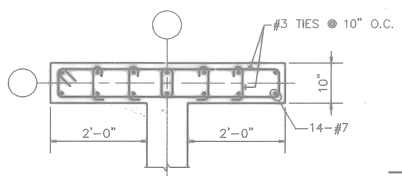

WALL COLUMN WC4 (5)
SCALE: 3/4"=1'-0" S2-5/S2-5

OPENING WIDTH	TOP BARS
UP TO 4'-0"	2-#6
OVER 4'-0"	2-#8

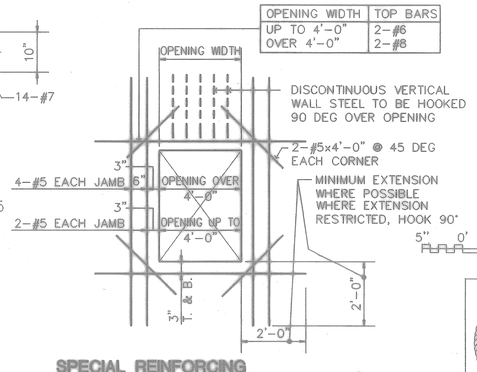

SPECIAL REINFORCING AT CONCRETE WALL OPENINGS (9)
NO SCALE
TYPICAL AT OPENING IN CONCRETE WALLS OVER 16"x16" UNLESS DETAILED OR SCHEDULED OTHERWISE
S2-5/S2-5

GRAPHIC SCALE
5" 0' 5' 10' 15' 20' 25'
SCALE 1/8" = 1'-0"

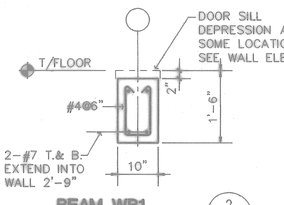

BEAM WB1 (2)
SCALE: 3/4"=1'-0" S2-5/S2-5

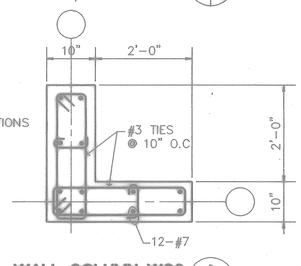

WALL COLUMN WC3 (6)
SCALE: 3/4"=1'-0" S2-5/S2-5

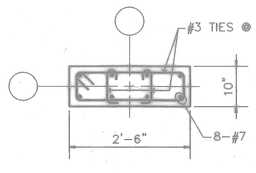

WALL COLUMN WC6 (7)
SCALE: 3/4"=1'-0" S2-5/S2-5

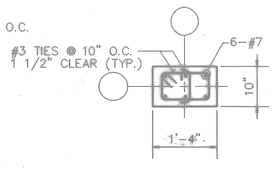

WALL COLUMN WC5 (8)
SCALE: 3/4"=1'-0" S2-5/S2-5

STATE OF ILLINOIS
RONALD L. WALKINGTON
81-3542
CHICAGO, ILLINOIS
LICENSED STRUCTURAL ENGINEER
Ronald L. Walkington
EXP. 11-30-94
8-31-94
ARCH. & ENGR. SEAL

FOR OFFICIAL USE ONLY

RECORD DRAWING
DATE 06/08/98

DATE 07-31-97 REMARKS AS-BUILT, NO CORRECTIONS BY BSTAL

Knight Architects Engineers Planners, Inc.
540 West Randolph Street
Chicago, IL 60661
Established in 1949
A Joint Venture of Knight Associates, Inc. Company
& Copyright 1997 Knight Architects Engineers Planners, Inc.

DSGN BUSCH DR MARSZALEK CHK SWANSON
SUP WALKINGTON CH ENGR
SUBMITTED BY DATE
CHIEF MECHANICAL
EIC DATE
FPE DATE
APPROVED DATE
OFFICER IN CHARGE
APPROVED DATE
CFD FOR COMMANDER, NAVFAC

DEPARTMENT OF THE NAVY
NAVAL FACILITIES ENGINEERING COMMAND
SOUTHERN DIVISION
CHARLESTON, S.C.

NAVAL TRAINING CENTER GREAT LAKES, ILLINOIS

DAMAGE CONTROL SCHOOL
FIREFIGHTING TRAINER
WALL ELEVATIONS

SIZE	CODE IDENT NO.	NAVFAC DRAWING NO.	DRAWING NO.
F	80091	5276532	S2-5

CONSTR CONTR NO. N62467-93-C-1143
SCALE AS NOTED SPEC 06-93-1143 SHEET 107 OF

Date&time: 08/16/94 11:22:14 User: OJ Filename: P:\PAPER\JSPS2-05
P: TL-BLOK PS lnum=0,0
P: TL-HOOT PS lnum=0,0
A: JOSNI001 MS lnum=0,0
A: JOSNI011 MS lnum=0,0
A: JOSNI04 MS PS lnum=0,0

107
108

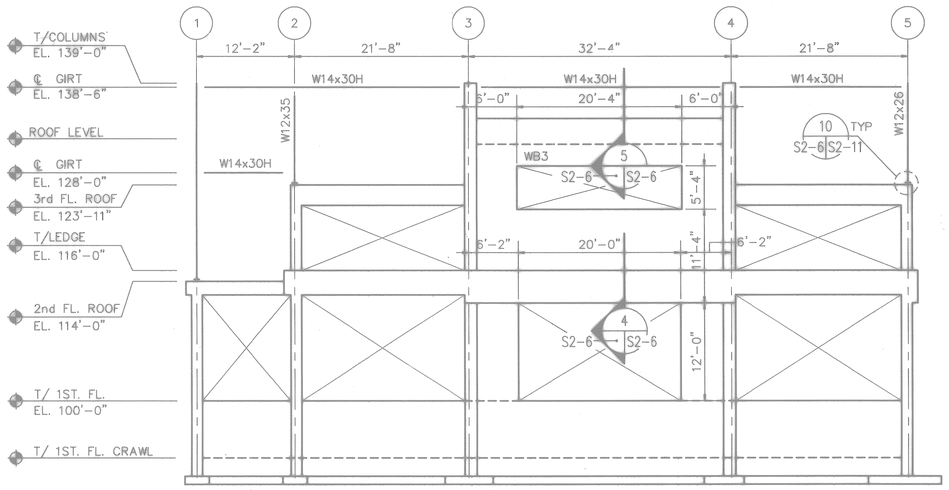

WALL ELEVATION - COL. LINE CC (A: S1-4 | S2-6; S2-6)
SCALE: 1/8"=1'-0"

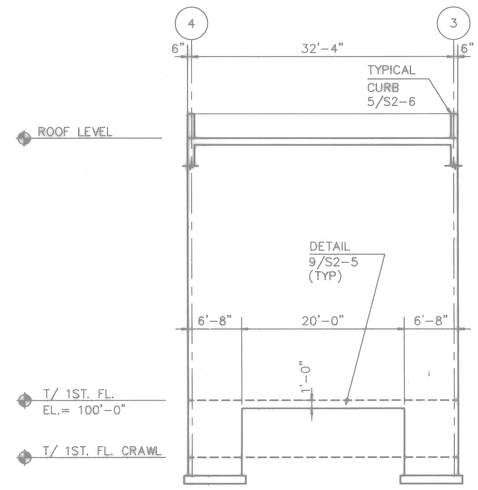

WALL ELEVATION - COL. LINE AA.7 (B: S2-6 | S2-6)
SCALE: 1/8"=1'-0"

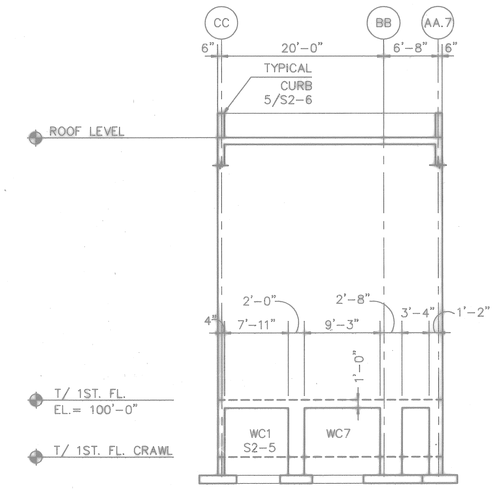

WALL ELEVATION - COL. LINE 3 AND 4 (C: S2-6 | S2-6)
SCALE: 1/8"=1'-0"

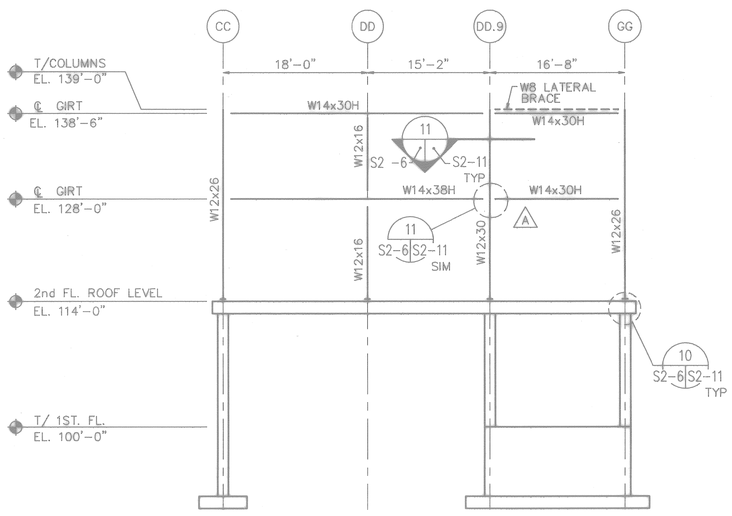

ELEVATION - COL. LINE 1 (D: S1-3 | S2-6; S1-4)
SCALE: 1/8"=1'-0"

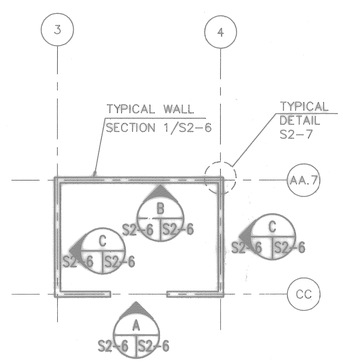

WALL ELEVATION KEY PLAN (E: S1-1 | S2-6; S1-2; S1-3)

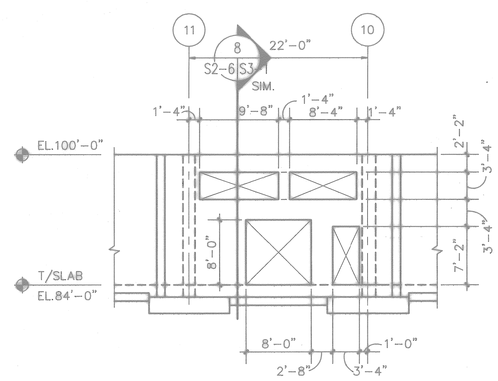

WALL ELEVATION - COL. LINE D (G: S1-5 | S2-6)
SCALE: 1/8"=1'-0"

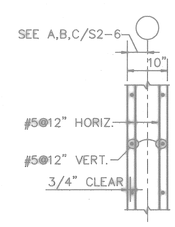

TYP. WALL SECTION (1: S2-6 | S2-6)
SCALE: 3/4"=1'-0"

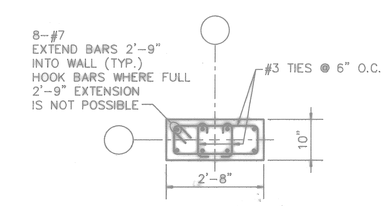

WALL COLUMN WC7 (2: S2-6 | S2-6)
SCALE: 3/4"=1'-0"

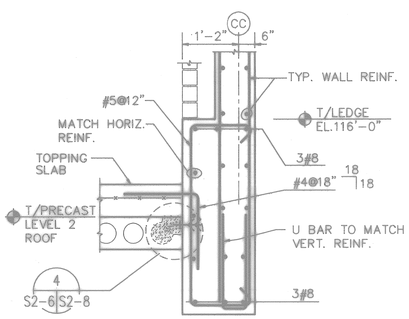

LEDGE SECTION (4: S2-6 | S2-6)
SCALE: 3/4"=1'-0"

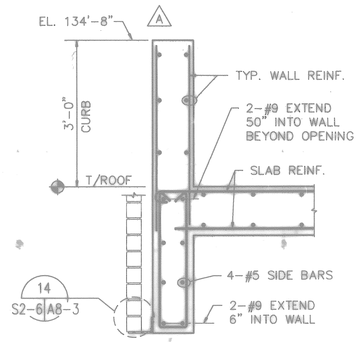

BEAM WB3 (5: S2-6 | S2-6)
SCALE: 3/4"=1'-0"

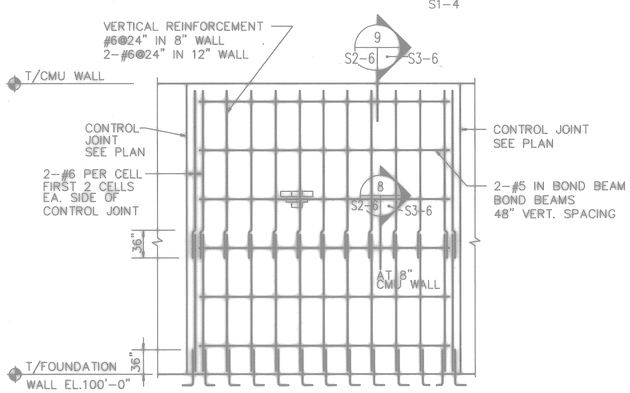

TYP. MASONRY SHEAR WALL ELEVATION (6: S2-6 | S2-6)
SCALE: NONE

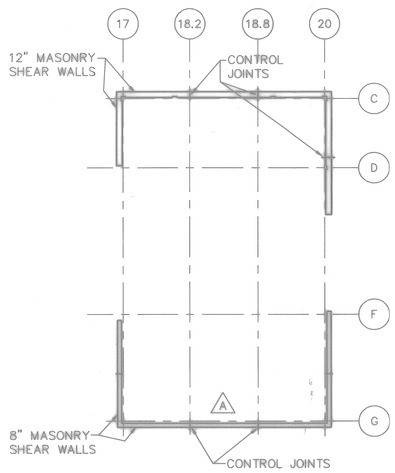

NOTE: SEE 6/S2-6 FOR REINFORCEMENT.

DCT MASONRY SHEAR WALL KEY PLAN (F: S1-6 | S2-6)
SCALE : NONE

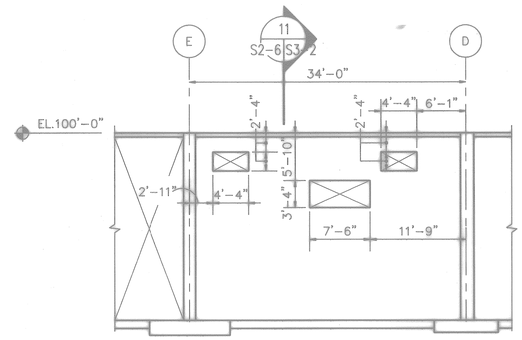

WALL ELEVATION - COL. LINE 17 (H: S1-5 | S2-6)
SCALE: 1/8"=1'-0"

GRAPHIC SCALE
5" 0' 5' 10' 15' 20' 25'
SCALE 1/8" = 1'-0"

FOR OFFICIAL USE ONLY

RECORD DRAWING
DATE 06/08/98

DATE	ISSUE	BY	INITIAL
07-31-97	CORRECTED TO AS-BUILT	JTL	

Knight Architects Engineers Planners, Inc.
549 West Randolph Street
Chicago, IL 60661
Established 1906
A Lester B. Knight & Associates, Inc. Company
©Copyright 1997 Knight Architects Engineers Planners, Inc.

DSGN BUSCH DR MARSZALEK CHK SWANSON
SUPV WALKINGTON CH ENGR
SUBMITTED BY DATE
FIRM MEMBER TITLE
E/C BR HD
FPC DIR
APPROVED DATE
OFFICER IN CHARGE
APPROVED DATE
EFD FOR COMMANDER, NAVFAC

ARCH. & ENGR. SEAL

DEPARTMENT OF THE NAVY — NAVAL FACILITIES ENGINEERING COMMAND
SOUTHERN DIVISION
CHARLESTON, S.C.

NAVAL TRAINING CENTER — GREAT LAKES, ILLINOIS

DAMAGE CONTROL SCHOOL
FIREFIGHTING TRAINER
WALL ELEVATIONS

SIZE	CODE IDENT NO.	NAVFAC DRAWING NO.	DRAWING NO.
F	80091	5276533	S2-6

CONSTR CONTR NO. N62467-93-C-1143
SCALE AS NOTED — SPEC 06-93-1143 — SHEET 108 OF

Filename: P:\PAPER\CHANGED\JTL\J5PS2-06
User: TWhite
Date&time: 11/24/97 07:48:35