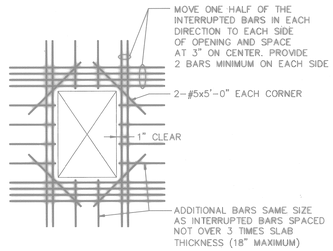

TYPICAL SLAB OPENING DETAIL (1 / S2-7)

SCALE: NONE

FOR SLAB OPENINGS 1'-6" OR LESS THE SLAB BARS CAN BE RESPACED WITHOUT ADDITIONAL REINFORCING.

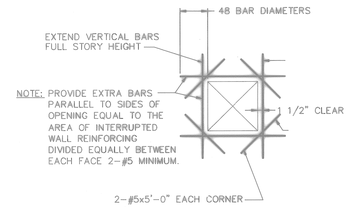

TYPICAL WALL WALL OPENING DETAIL (2 / S2-7)

SCALE: NONE

FOR OPENINGS 1'-6" OR LESS, THE WALL STEEL CAN BE RESPACED WITHOUT ADDITIONAL REINFORCING. PROVIDE CORNER BARS.

CONCRETE TWO WAY SLAB SCHEDULE

MARK	THICK	BOT. BARS SHORT WAY	BOT. BARS LONG WAY	TOP BARS SHORT WAY "A"	TOP BARS SHORT WAY "B"	TOP BARS LONG WAY "A"	TOP BARS LONG WAY "B"	REMARKS
CS1	VARIES 8"-12 1/2"	#6@12"	#6@12"	#5@12"	---	#5@12"	---	
CS2	10"	#6@12"	#6@12"	#5@12"	#5@12"	#5@12"	#5@12"	TOP BARS CONTINUOUS EACH WAY
CS3	VARIES 8"-12"	#6@6"	#6@12"	#5@12"	---	#5@12"	---	TOP BARS CONTINUOUS EACH WAY
CS4	VARIES 8"-12"	#6@12"	#6@12"	#5@12"	---	#5@12"	---	
CS5	VARIES 8"-10 1/2"	#5@12"	#5@12"	#4@12"	#4@12"	#4@12"	---	

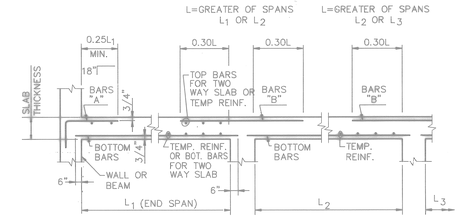

TYPICAL SLAB BAR PLACING DIAGRAM

SCALE: NONE

NOTE: FOR TWO-WAY SLABS, PLACE TOP & BOTTOM BARS IN SHORT WAY AS OUTERMOST BARS.

CONCRETE ONE WAY SLAB SCHEDULE

MARK	THICK	BOTT. BARS	TOP BARS "A"	TOP BARS "B"	TEMP. REINF.	REMARKS
CS6	8"	#4@12"	#4@12"	---	#4@12"	
CS7	8"	#6@12"	#4@12"	#4@12"	#4@12"	
CS8	8"	#5@12"	#4@12"	---	#4@12"	HOOK TOP BARS @ OPENING
CS9	8"	#4@12"	---	---	#4@12"	

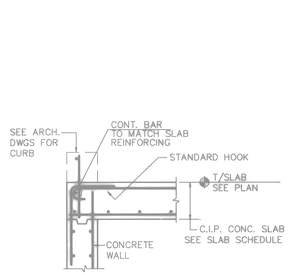

TYPICAL WALL SECTION SLAB TO T/WALL (4 / S2-7)

SCALE: 3/4"=1'-0"

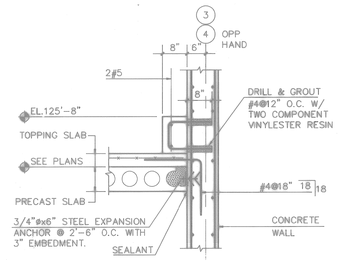

WALL SECTION PRECAST PARALLEL (5 / S2-7)

SCALE: 3/4"=1'-0"

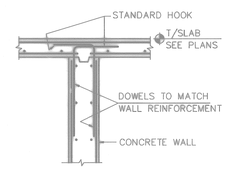

TYPICAL WALL SECTION SLAB OVER WALL (6 / S2-7)

SCALE: 3/4"=1'-0"

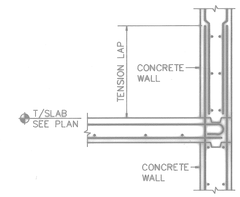

TYPICAL WALL SECTION SLAB TO WALL (7 / S2-7)

SCALE: 3/4"=1'-0"

PRECAST SLAB SCHEDULE

DESIGNATION	THICKNESS	SUPERIMPOSED LOADS (NOTE 2): TOPPING SLAB (NOTE 1)	SUPERIMPOSED LOADS (NOTE 2): + LIVE LOAD	COVER
PS1	8"	VARIES 2 1/2" TO 5"	85 PSF	1 1/2"
PS2	8"	VARIES 3" TO 7"	85 PSF	1 1/2"
PS3	8"	VARIES 2" TO 7"	85 PSF	1 1/2"
PS4	8"	VARIES 2, 2 1/2" TO 5"	85 PSF	1 1/2"
PS5	8"	VARIES 3" TO 8"	85 PSF	1 1/2"
PS6	10"	VARIES 3" TO 8"	85 PSF	1 1/2"

PRECAST SLAB SCHEDULE NOTES:

1. TOPPING SLAB SHALL BE LIGHTWEIGHT CONCRETE. REINFORCE TOPPING SLAB WITH 6x6-W2.9xW2.9 WWF.
2. WEIGHT OF TOPPING SLAB TO BE ADDED TO LIVE LOAD FOR TOTAL SUPPERIMPOSED LOAD. SEE PLANS FOR ANY ADDITIONAL CONCENTRATED LOADS. SEE SHEETS S1-2 & S1-4 FOR ADDITIONAL SUPERIMPOSED LOADS AT ROOF STACKS TO BE USED FOR PRECAST DESIGN.
3. SEE TYPICAL DETAIL 10/S2-7.

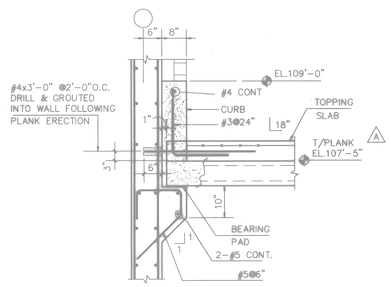

SECTION (9 / S1-2 S2-7)

SCALE: 3/4"=1'-0"

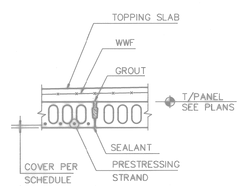

TYPICAL PRECAST SLAB DETAIL (10 / S2-7)

SCALE: 3/4"=1'-0"

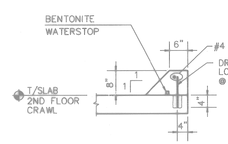

NOTE: SEE SHEET A2-2 FOR CURB LOCATIONS.

CURB DETAIL - TYPICAL AROUND OPENINGS (11 / S1-2 S2-7)

SCALE: 3/4"=1'-0"

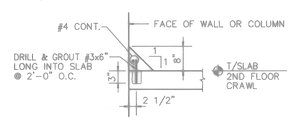

NOTE: SEE ARCH. DWGS FOR CURB LOCATIONS.

CURB DETAIL - TYPICAL AT WALLS AND COLUMNS (12 / S1-1 S2-7 S1-2)

SCALE: 3/4"=1'-0"

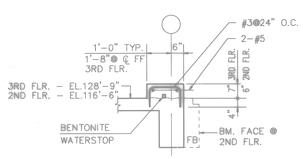

CURB DETAIL (13 / S1-3 S2-7)

SCALE: 1/2"=1'-0"

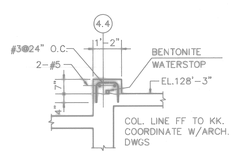

CURB DETAIL (14 / S1-3 S2-7)

SCALE: 1/2"=1'-0"

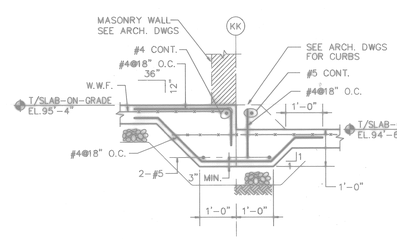

SLAB-ON-GRADE ELEVATION CHANGE (15 / S1-1 S2-7)

SCALE: NONE

NOTE:
SEE SHEET S2-1 FOR TYPICAL WALL INTERSECTION DETAILS.

FOR OFFICIAL USE ONLY

RECORD DRAWING
DATE 06/08/98

REV	DATE	ISSUE	BY	APPR.
A	07-21-97	CORRECTED TO AS-BUILT	JTL	

Sasaki Associates Engineers Planners, Inc. 200 West Monroe Street Chicago, IL 60606 Facsimile: 312 332-2281 Copyright 1997 Sasaki Associates Engineers Planners, Inc.

DSGN BUSCH CHK MARSZALEK CHK SWANSON
SUP WALKINGTON DWN
SUBMITTED BY ____ DATE ____
FIRM MEMBER TITLE
EIC ____ BR. HD ____
FPO ____ DIR ____
APPROVED ____ DATE ____
OFFICER IN CHARGE
APPROVED ____ DATE ____
FOR COMMANDER, NAVFAC

DEPARTMENT OF THE NAVY — NAVAL FACILITIES ENGINEERING COMMAND
SOUTHERN DIVISION
CHARLESTON, S.C.

NAVAL TRAINING CENTER — GREAT LAKES, ILLINOIS

DAMAGE CONTROL SCHOOL FIREFIGHTING TRAINER WALLS AND SLABS

SIZE	CODE IDENT NO.	NAVFAC DRAWING NO.	DRAWING NO.
F	80091	5276534	S2-7

CONTR CONTR NO. N62467-93-C-1143
SCALE AS NOTED — SPEC 06-93-1143 — SHEET 109 OF

ARCH. & ENGR. SEAL

Datetime: 10/30/97 14:43:45 User: TWhite Filename: P:\PAPER\CHANGED\JTL\SPS2-07

109

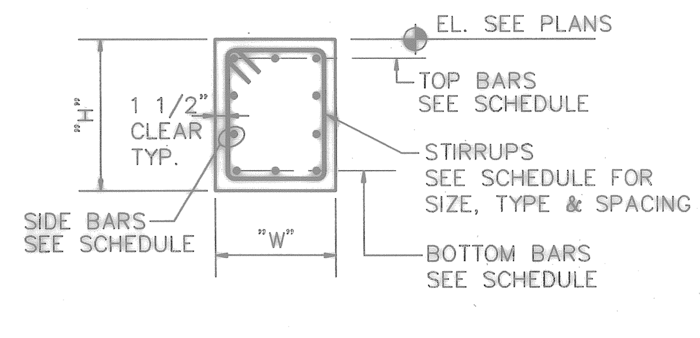

BEAM SECTION
ISOLATED BEAM (1, S2-8 | S2-8)
SCALE: 3/4"=1'-0"

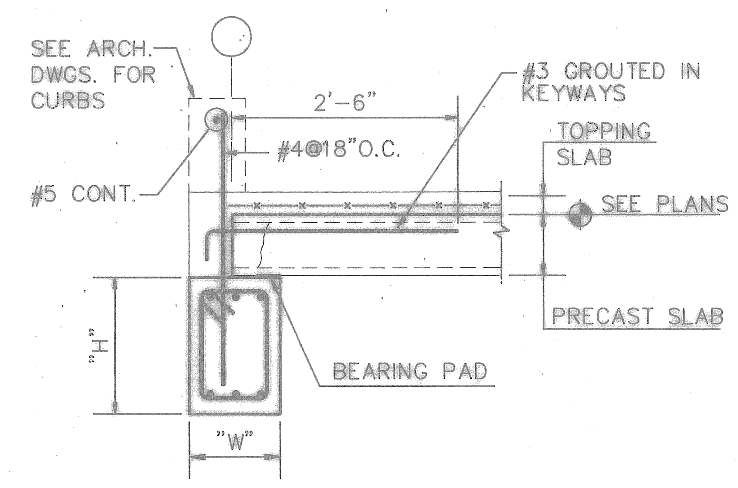

BEAM SECTION
PRECAST 1 SIDE (2, S2-8 | S2-8)
SCALE: 3/4"=1'-0"

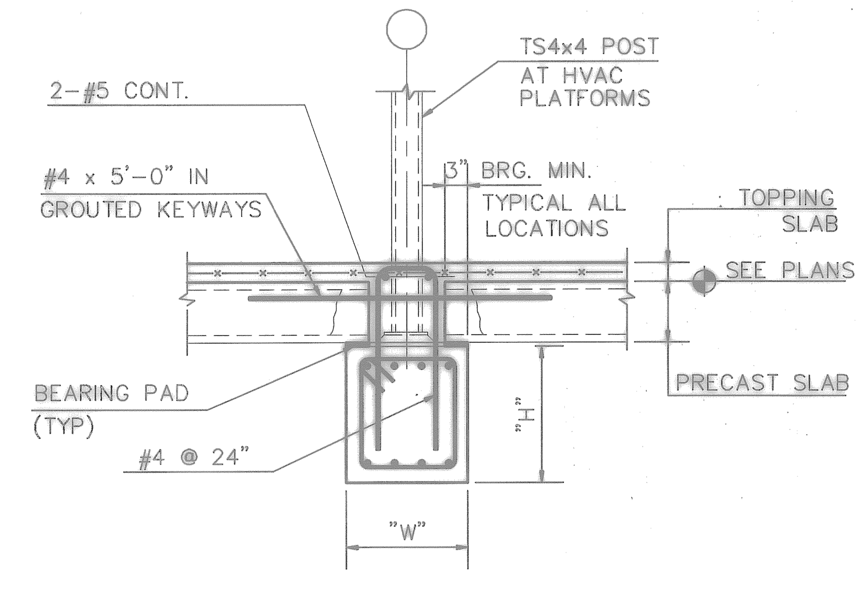

BEAM SECTION
PRECAST 2 SIDES (3, S2-8 | S2-8)
SCALE: 3/4"=1'-0"

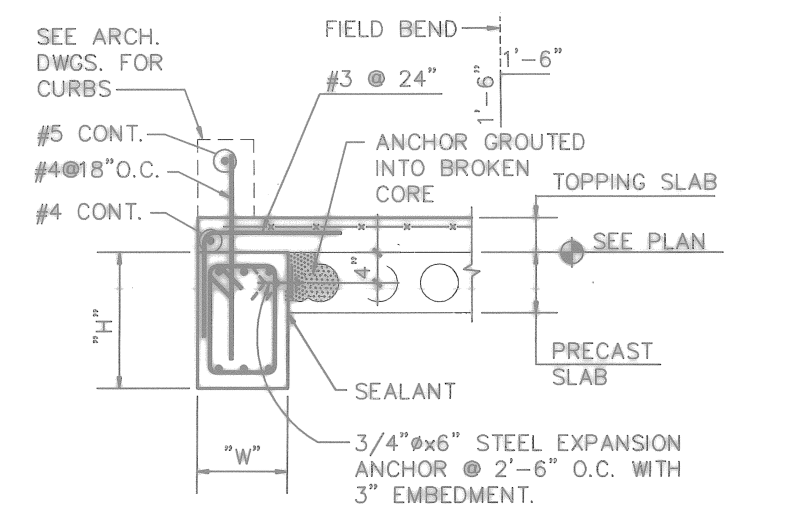

BEAM SECTION
PRECAST PARALLEL (4, S2-8 | S2-8)
SCALE: 3/4"=1'-0"

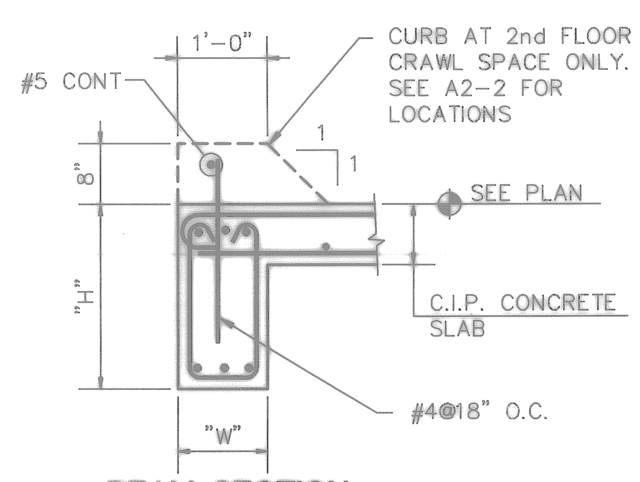

BEAM SECTION
SLAB 1 SIDE (5, S2-8 | S2-8)
SCALE: 3/4"=1'-0"

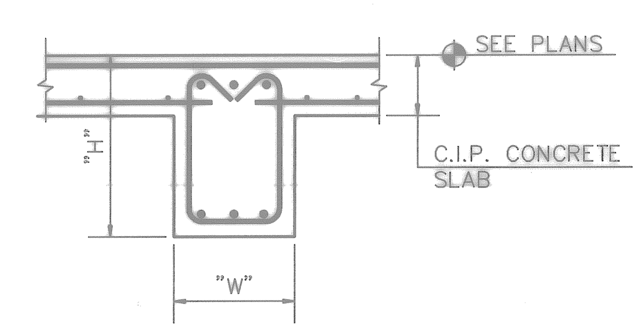

BEAM SECTION
SLAB 2 SIDES (6, S2-8 | S2-8)
SCALE: 3/4"=1'-0"

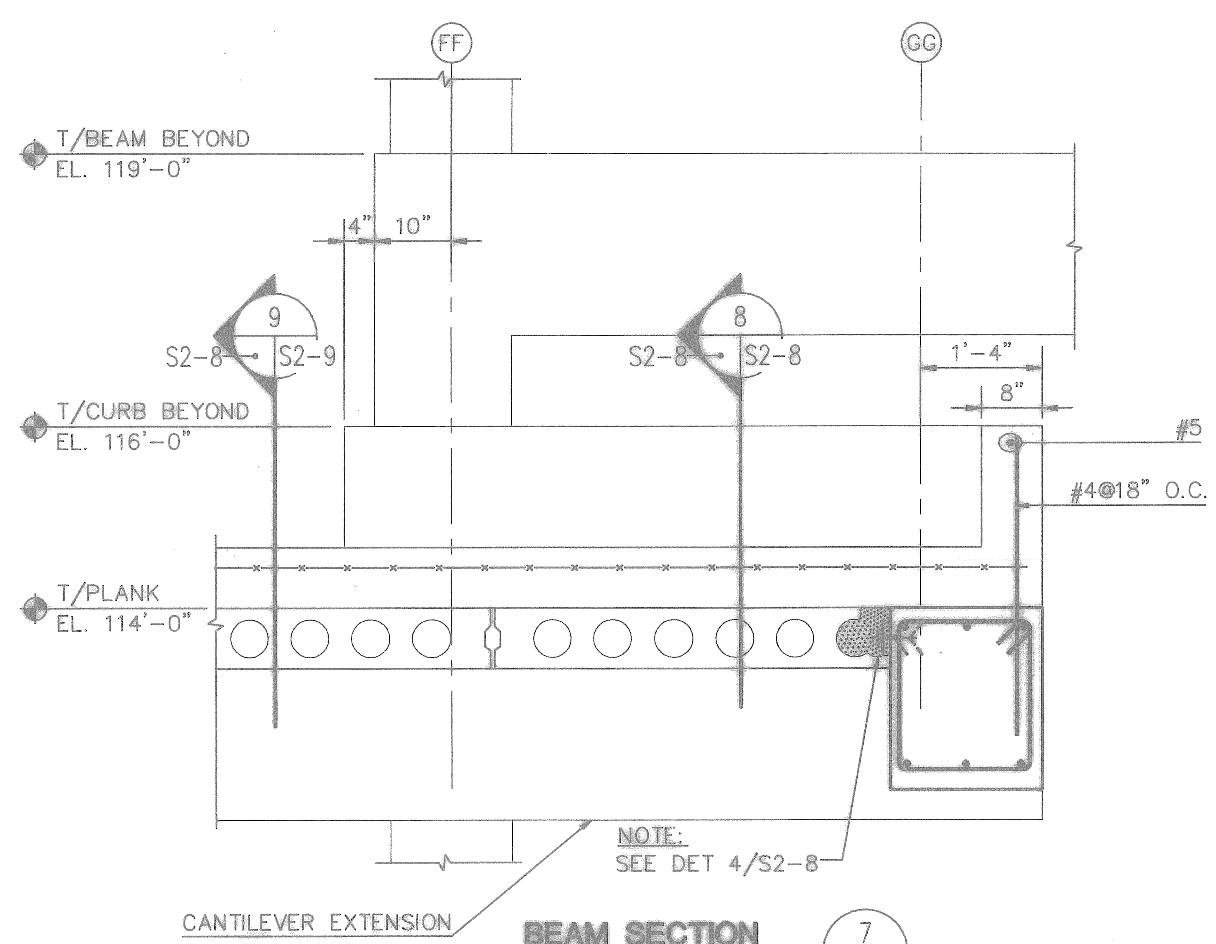

BEAM SECTION (7, S2-8 | S2-8)
SCALE: 3/4"=1'-0"

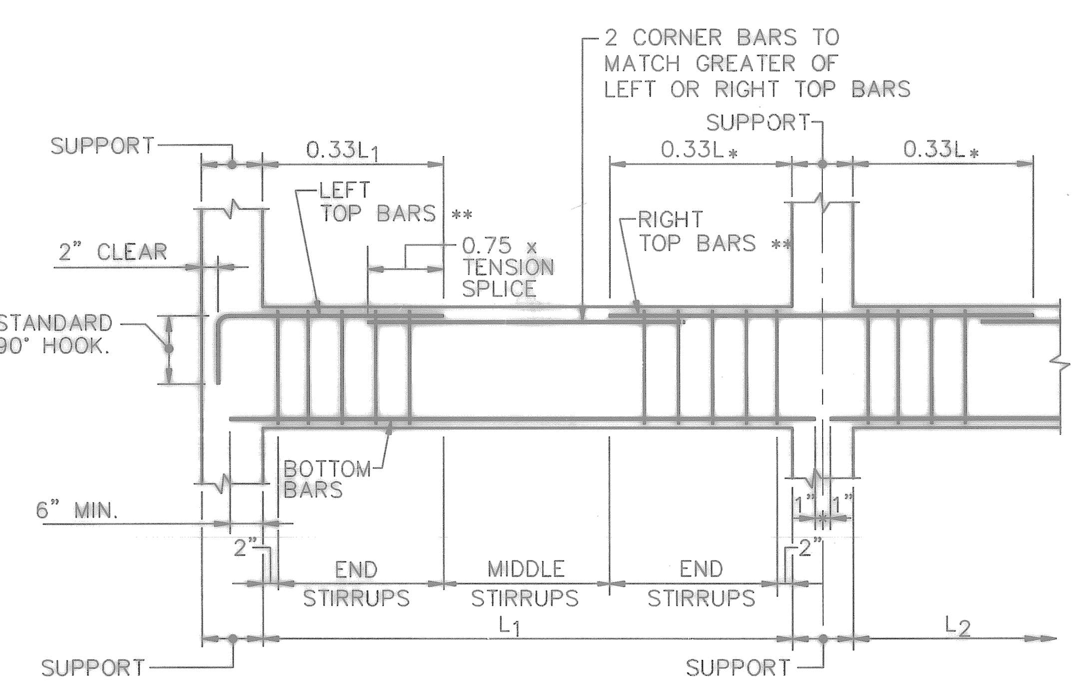

TYPICAL BEAM BAR PLACING DIAGRAM
SCALE: NONE

NOTES:
1. UNLESS OTHERWISE SHOWN IN SCHEDULES
   * L IS GREATER OF ADJACENT SPANS L_1 & L_2
   ** LEFT OR RIGHT SUPPORT WHEN LOOKING UP OR TO LEFT ON PLAN .
2. WHERE ADJOINING BEAMS BOTH INCLUDE TOP BARS AT A SUPPORT, PROVIDE THE GREATER OF THE TWO.

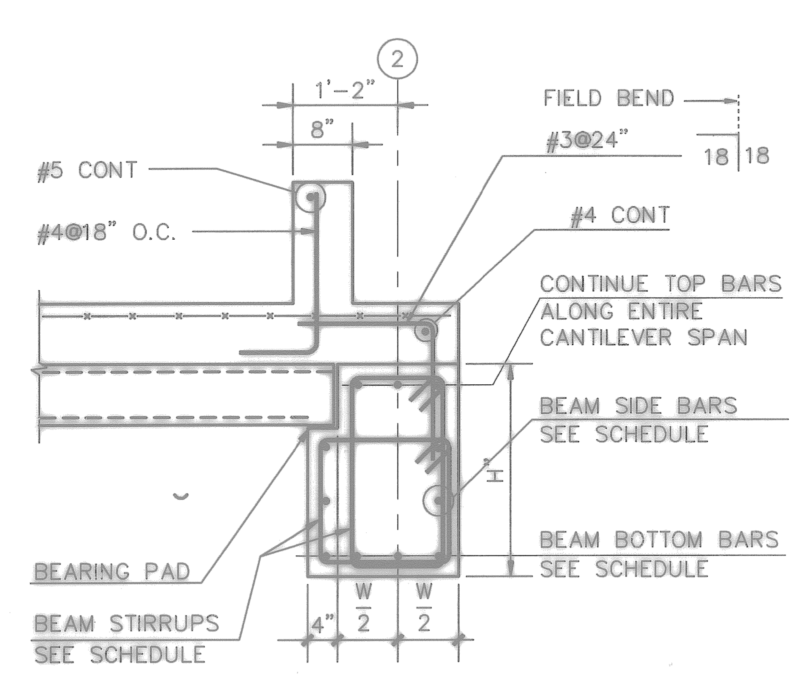

BEAM SECTION
CANTILEVERED BEAM (8, S2-8 | S2-8)
SCALE: 3/4"=1'-0"

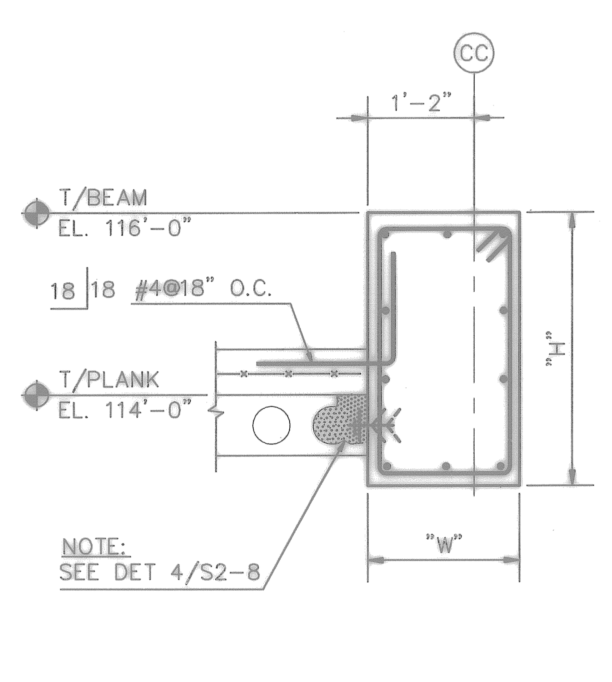

BEAM SECTION (9, S2-8 | S2-8)
SCALE: 3/4"=1'-0"

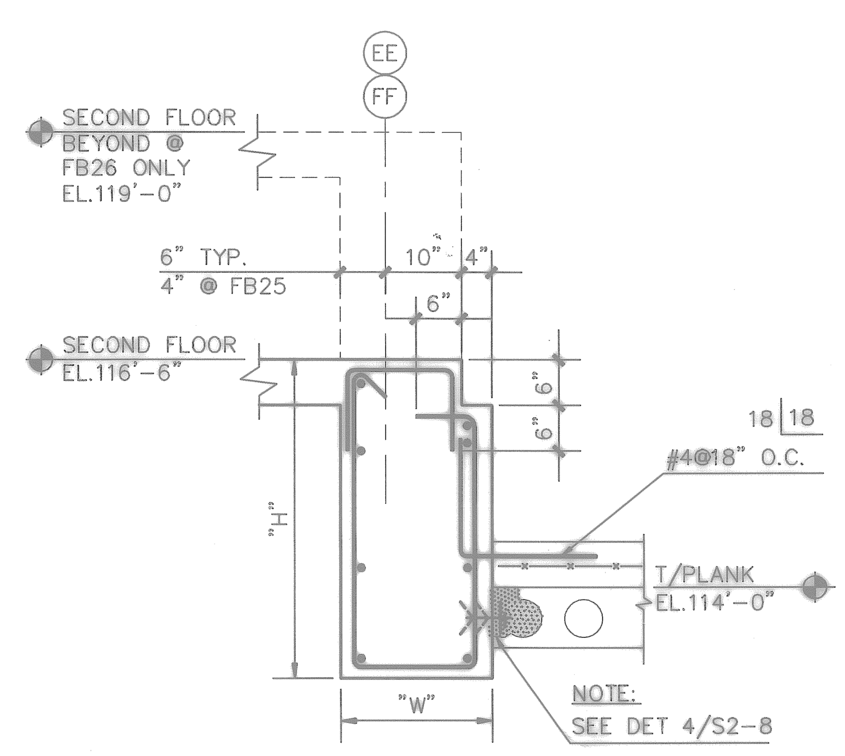

BEAM SECTION (10, S2-8 | S2-8)
SCALE: 3/4"=1'-0"

BEAM SCHEDULE

	MARK	WIDTH "W"	DEPTH "H"	BOTTOM BARS	TOP BARS LEFT SUPPORT	TOP BARS RIGHT SUPPORT	END STIRRUPS SIZE	END STIRRUPS TYPE	END STIRRUPS SPACING	MIDDLE STIRRUPS SIZE	MIDDLE STIRRUPS TYPE	MIDDLE STIRRUPS SPACING	DETAIL SHT.S2-8 U.N.O.	REMARKS
	FB1	12	24	3-#8	2-#6	2-#6	#3	⊔	10	#3	⊔	10	5	
	FB2	12	18	3-#6	2-#6	2-#6	#3	⊔	8	#3	⊔	8	5, 1/S2-9	
	FB3	12	18	2-#6	2-#6	2-#6	#3	⊔	8	#3	⊔	8	5	
	FB4	10	39	2-#7	2-#6	2-#6	#3	⊔	10	#3	⊔	10	4	2#5 SIDE BARS E.F.
A (*)	FB7	12	24	2-#6	2-#6	2-#6	#3	⊔	8	#3	⊔	10	5	
	FB8	12	18	3-#6	2-#6	2-#6	#3	⊔	8	#3	⊔	8	5 & 6	
	FB9	12	24	3-#7	3-#7	3-#7	#3	⊔	8	#3	⊔	10	5	
	FB10	12	24	3-#6	3-#6	3-#6	#3	⊔	8	#3	⊔	10	5, 1/S2-9	
	FB12	10	18	3-#8	2-#7	2-#7	#3	☐	8	#3	☐	8	1 & 5	
	FB13	10	18	2-#6	2-#5	2-#5	#3	☐	8	#3	☐	8	2	
	FB14	16	36	4-#8	2-#7	2-#7	#4	☐	10	#3	☐	10	6/S2-9	3#5 SIDE BARS E.F.
	FB15	12	16	2-#6	2-#6	2-#6	#3	☐	6	#3	☐	6	4	
	FB16	12	18	3-#8	3-#8	3-#8	#3	⊔	6	#3	⊔	6	5, 1	
	FB17	20	36	4-#8	3-#7	3-#7	#3	☐	12	#3	☐	12	9	2#5 SIDE BARS E.F.
	FB18	22	36	4-#8	4-#7	3-#7	#4	☐	12	#4	☐	12	2	2#5 SIDE BARS E.F.
	FB19	22	36	4-#8	2-#7	---	#4	☐	12	#4	☐	10	2	2#5 SIDE BARS E.F.
	FB20	22	24	3-#7	2-#6	2-#6	#3	☐	10	#3	☐	10	4	
	FB21	16	28	6-#8	4-#8	4-#8	#3	☐	12	#3	☐	12	7, 9/S2-9	2#5 SIDE BARS E.F. CANT @ COL LINE FF
	FB22	16	28	3-#7	---	3-#7	#3	☐	12	#3	☐	12	9/S2-9	
	FB23	20	24	3-#8	3-#7	3-#7	#3	☐	8	#3	☐	8	2	
	FB24	20	24	3-#8	3-#7	---	#3	☐	8	#3	☐	8	2	
	FB25	18	40	4-#8	4-#6	4-#6	#4	☐	12	#4	☐	12	10	2#5 SIDE BARS E.F.
	FB26	20	40	4-#8	4-#8	4-#8	#4	☐	18	#4	☐	18	10, 1/S2-9	2#5 SIDE BARS E.F.
	FB27	20	40	4-#8	---	4-#8	#4	☐	12	#4	☐	12	10	2#5 SIDE BARS E.F.
	FB29	12	24	3-#7	3-#7	3-#7	#3	⊔	10	#3	⊔	10	5	
A (*)	FB30	12	24	2-#7	3-#6	---	#3	⊔	10	#3	⊔	10	5	
(*)	FB31	12	24	2-#7	2-#6	---	#3	⊔	10	#3	⊔	10	5	
	FB33	14	16	5-#8	3-#8	3-#8	#3	⊔⊔	6	#3	⊔⊔	6	8/S2-9	
	FB34	10	24	3-#8	2-#6	---	#3	⊔⊔	8	#3	⊔⊔	8	15/S2-2	
	FB35	20	28	7-#8	3-#8	7-#8	#4	⊟	6	#4	⊟	12	9/S2-9	2-#5 E.F. CONT.
	FB36	20	28	4-#8	---	4-#7	#4	⊟	12	#4	⊟	12	9/S2-9	2-#5 E.F. CONT.
	FB37	20	28	4-#8	4-#7	4-#7	#4	⊟	12	#4	⊟	12	9/S2-9	2-#5 E.F. CONT.
A (*)	FB39	12	12	2-#5	2-#5	2-#5	#3	⊔	4	#3	⊔	4	5	
	FB40	12	22	5-#6	2-#6	2-#6	#3	☐	8	#3	☐	8	2	
	FB42	16	32	4-#8	4-#8	4-#8	#4	⊟	10	#4	⊟	14	9/S2-9	2-#6 E.F. CONT.
	FB43	16	29	3-#7	2-#6	2-#6	#4	⊟	12	#4	⊟	14	9/S2-9	2#6 SIDE BARS E.F.
	FB44	16	24	4-#7	4-#7	4-#7	#4	☐	10	#4	☐	10	3	
	FB45	16	24	3-#6	2-#5	2-#5	#3	☐	10	#3	☐	10	3	
	FB46	16	24	3-#7	---	---	#3	☐	10	#3	☐	10	3	
A (*)	FB47	12	21	2-#7	2-#6	2-#6	#3	☐	6	#3	☐	6	2	
(*)	FB48	12	21	3-#7	3-#6	3-#6	#3	☐	6	#3	☐	6	2	
	FB49	20	21	3-#8	3-#8	3-#8	#3	☐	8	#3	☐	8	3/S2-9	
	FB50	12	32	3-#8	3-#6	3-#6	#3	☐	14	#3	☐	14	4	
A (*)	FB51	12	32	3-#8	3-#6	3-#6	#3	☐	14	#3	☐	14	4	
(*)	FB52	12	32	3-#7	3-#6	---	#3	☐	14	#3	☐	14	4	
	FB53	20	18	3-#7	3-#7	3-#7	#3	☐	8	#3	☐	8	2/S2-9	TOP BARS CONT.
	FB54	16	32	3-#8	---	---	#4	☐	12	#4	⊟	12	9/S2-9	2#6 SIDE BARS E.F.
	FB55	20	28	4-#8	---	4-#7	#4	☐	12	#4	⊟	12	9/S2-9	2#5 SIDE BARS E.F.
A (*)	FB56	16	29	2-#8	2-#8	---	#4	☐	12	#4	☐	12	4/S2-9	2#6 SIDE BARS E.F.
(*)	FB57	16	29	3-#8	3-#8	3-#8	#4	☐	12	#4	☐	12	4/S2-9	2#6 SIDE BARS E.F.
	FB58	16	29	2-#8	---	2-#8	#4	⊟	12	#4	⊟	12	4A/S2-9	2#6 SIDE BARS E.F.
	FB59	12	16	2-#6	2-#5	2-#5	#3	☐	6	#3	☐	6	2	
	FB60	10	24	2-#6	2-#5	2-#5	#3	☐	12	#3	☐	12	4	
	FB61	16	16	2-#6	2-#5	2-#5	#3	☐	6	#3	☐	6	2	
A (*)	FB62	12	24	3-#6	3-#6	3-#6	#3	⊔	8	#3	⊔	10	5, 1/S2-9 OR 7/S2-9	
(*)	FB63	12	29	3-#7	2-#6	2-#6	#3	☐	12	#3	☐	12	4	
	FB64	10	24	2-#7	2-#7	2-#7	#3	⊔	12	#3	⊔	10	6	2#5 SIDE BARS E.F.
	FB65	12	24	2-#6	2-#6	2-#6	#3	⊔	8	#3	⊔	10	5 (SIM) 7/S2-9	2#5 SIDE BARS E.F.
	FB66	14	16	4-#8	2-#8	–	#3	⊔⊔	6	#3	⊔⊔	6	8/S2-9	
A	FB67	10	16	3-#8	2-#6	2-#6	#3	⊔⊔	6	#3	⊔⊔	6	8/S2-9	
(*)	FB68	12	30	4-#7	3-#7 / 1-#7x32'-6" + HOOK @ FF	3-#7	#3	⊔	8	#3	⊔	10	5	
(*)	FB69	12	32	4-#8	4-#8x32'-6" + HOOK @ FF		#3	☐	14	#3	☐	14	4	
(*)	FB70	16	36										10/S2-9	

(*) SHELF ANGLE INSERT

A (COORDINATE LOCATION W/ARCHITECTURAL ELEVATIONS ON DWGS. A4-1, A4-2, A4-3 & A4-4).

SHELF ANGLE INSERT SHALL BE OF T-HEAD DESIGN, HOT DIPPED GALVANIZED WITH 3/4" ASKEW HEAD GALVANIZED BOLT, WASHER AND NUT. INSERT SHALL ALLOW FOR 2" VERTICAL ADJUSTMENT. FAILURE LOAD OF INSERT FOR 4000 PSI LIGHTWEIGHT CONCRETE WITH CENTROID OF LOAD 2 1/8 INCHES FROM FACE OF CONCRETE SHALL BE NOT LESS THAN 9,300 LBS WHEN BOTTOM OF INSERT IS 1/2 INCH FROM BOTTOM OF CONCRETE BEAM. IF CONCRETE IS NOT IN LINE WITH SHELF ANGLE, USE HORSESHOE SHIMMING WASHER TO FILL THE SPACE BETWEEN THE BOLT AND THE BOTTOM LEG OF THE SHELF ANGLE.

FOR OFFICIAL USE ONLY

RECORD DRAWING
DATE 06/08/98

DQD 05/28/98

A DATE 07-31-97 ISSUE CORRECTED TO AS-BUILT BY JTL INITIAL W.M.W.

Knight Architects Engineers Planners, Inc.
549 West Randolph Street
Chicago, IL 60661
Established in 1945
A Lester B. Knight & Associates, Inc. Company
© Copyright 1994 Knight Architects Engineers Planners, Inc.

DEPARTMENT OF THE NAVY — NAVAL FACILITIES ENGINEERING COMMAND
SOUTHERN DIVISION
CHARLESTON, S.C.

DSGN BUSCH DR MARSZALEK CHK SWANSON
SUPV WALKINGTON CH ENGR
SUBMITTED BY / DATE
FIRM MEMBER TITLE
EIC / BR HD
FPE / DIR
APPROVED / DATE
OFFICER IN CHARGE
APPROVED / DATE
EFD FOR COMMANDER, NAVFAC

ARCH. & ENGR. SEAL

NAVAL TRAINING CENTER — GREAT LAKES, ILLINOIS

DAMAGE CONTROL SCHOOL
FIREFIGHTING TRAINER
CONCRETE BEAMS

SIZE F | CODE IDENT NO. 80091 | NAVFAC DRAWING NO. 5276535 | DRAWING NO. S2-8
CONSTR CONTR NO. N62467-93-C-1143
SCALE AS NOTED | SPEC 06-93-1143 | SHEET 110 OF

Date&time: 10/30/97 14:46:59 User: TWhite Filename: P:\PAPER\CHANGED\JTL\JSPS2-08

110

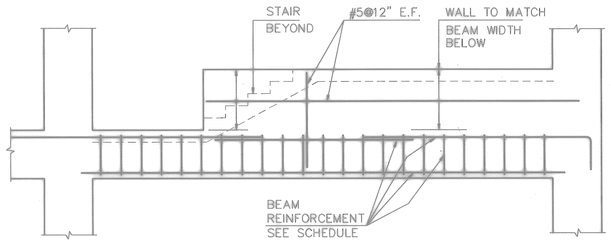

BEAM ELEVATION (1 / S2-9)
SCALE: 3/8"=1'-0"

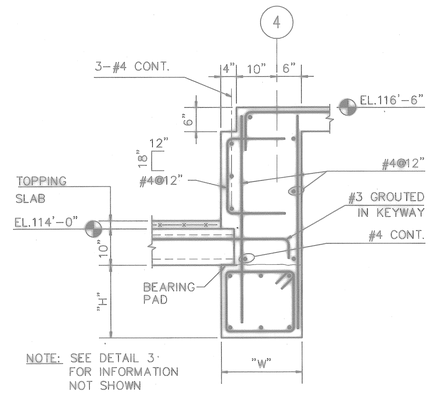

BEAM SECTION (2 / S2-9)
SCALE: 3/4"=1'-0"

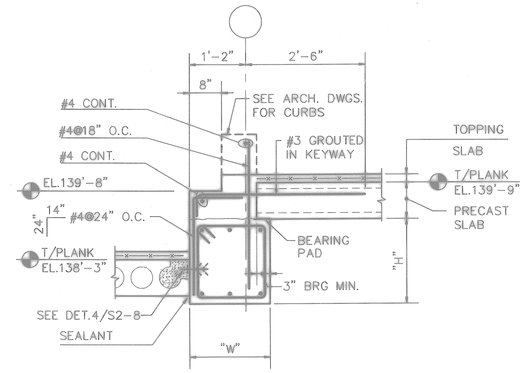

BEAM SECTION (3 / S2-9)
SCALE: 3/4"=1'-0"

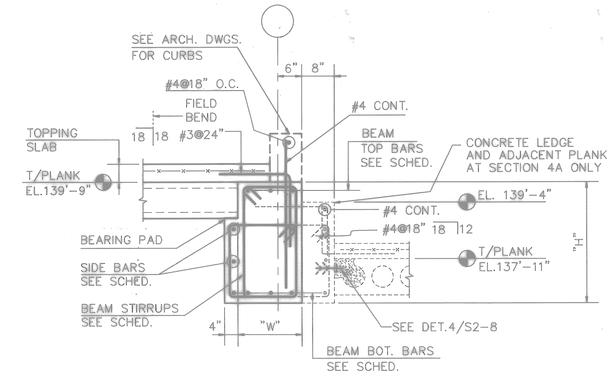

BEAM SECTION (4 / S2-9 4A / S2-9)
SCALE: 3/4"=1'-0"

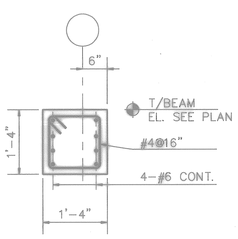

SECTION (5 / S1-4 S2-9)
SCALE: 3/4"=1'-0"

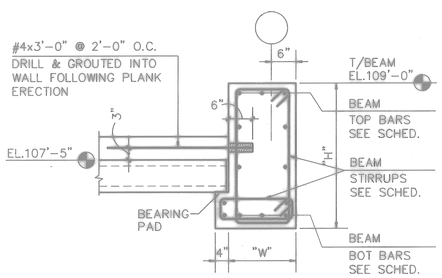

BEAM SECTION (6 / S1-4 S2-9)
SCALE: 3/4"=1'-0"

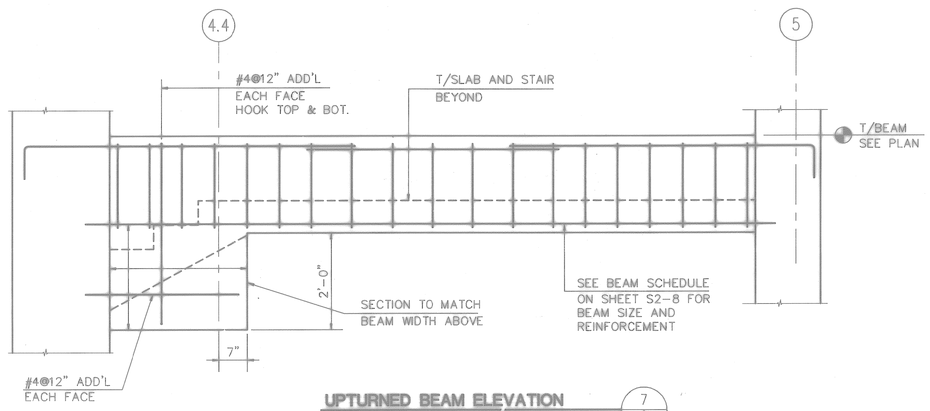

UPTURNED BEAM ELEVATION (7 / S2-9)
SCALE: 3/4"=1'-0"

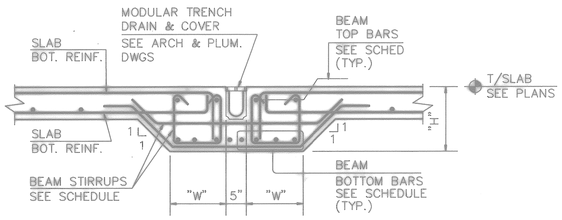

A TRENCH BEAM SECTION (8 / S2-8 S2-9)
SCALE: 3/4"=1'-0"

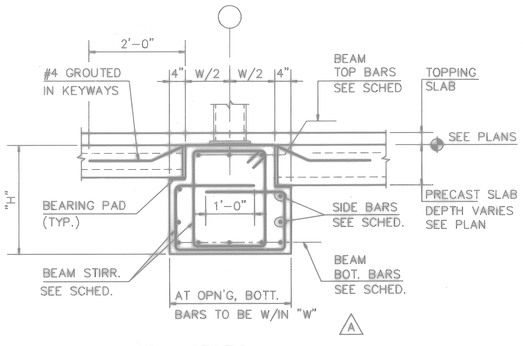

BEAM SECTION PRECAST 2 SIDES (9 / S2-8 S2-9)
SCALE: 3/4"=1'-0"

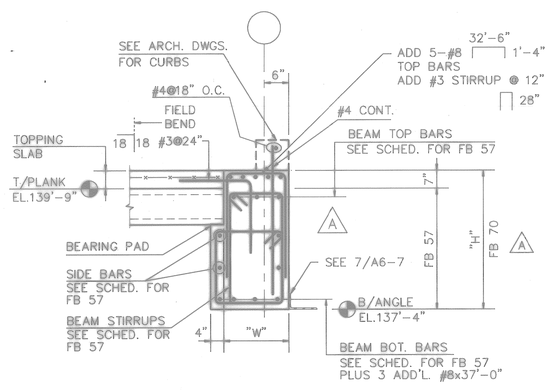

BEAM SECTION (10 / S2-8 S2-9)

FOR OFFICIAL USE ONLY

RECORD DRAWING
DATE 06/08/98

A DATE 07-31-07 ISSUE CORRECTED TO AS-BUILT BY JTL INITIAL

Knight Architects Engineers Planners, Inc.
549 West Randolph Street
Chicago, IL 60661
Established in 1910
A Center & Knight & Associates, Inc. Company
©Copyright 1994 Knight Architects Engineers Planners, Inc.

DSGN BUSCH CK MARSZALEK CHK SWANSON
SUP WALKINGTON CH ENGR
SUBMITTED BY DATE
FIRM MEMBER TITLE
E/C SR HO
FPE DR
APPROVED DATE
OFFICER IN CHARGE
APPROVED DATE
EFD FOR COMMANDER NAVFAC

ARCH. & ENGR. SEAL

DEPARTMENT OF THE NAVY — NAVAL FACILITIES ENGINEERING COMMAND
SOUTHERN DIVISION
CHARLESTON, S.C.

NAVAL TRAINING CENTER — GREAT LAKES, ILLINOIS

DAMAGE CONTROL SCHOOL
FIREFIGHTING TRAINER
CONCRETE BEAMS

SIZE	CODE IDENT NO.	NAVFAC DRAWING NO.	DRAWING NO.
F	80091	5276536	S2-9
		CONSTR CONTR NO. N62467-93-C-1143	
SCALE 3/4"=1'-0"		SPEC 06-93-1143	SHEET 111 OF

Filename: P:\PAPER\CHANGED\JTL\JSPS2-09
User: TWhite
Date&time: 10/30/97 14:49:53

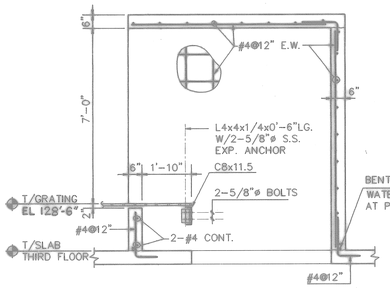

THIRD FLOOR LADDER ACCESS (1 / S1-3 S2-10)

SCALE: 1/2"=1'-0"

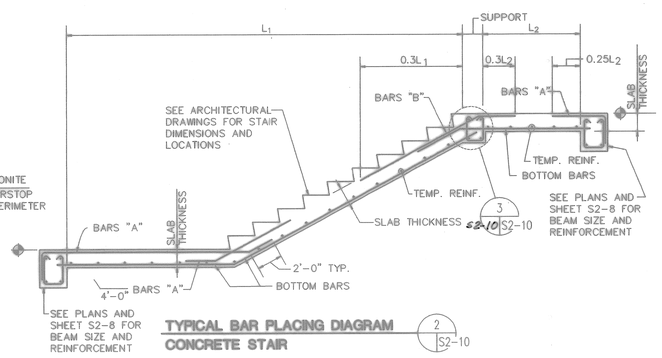

TYPICAL BAR PLACING DIAGRAM (2 / S2-10)
CONCRETE STAIR

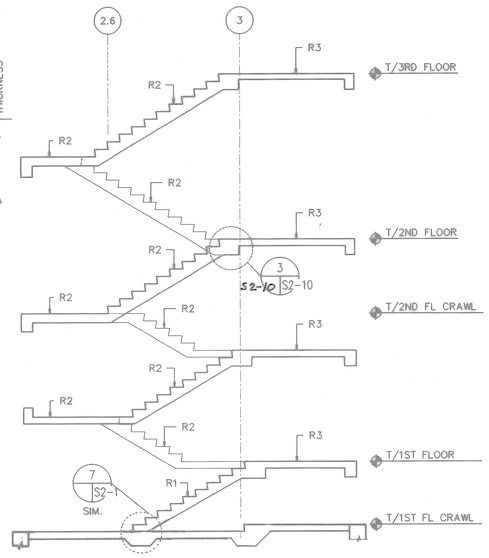

NOTE:
SEE DETAIL 2 FOR STAIR & LANDING SIZE AND REINFORCEMENT

STAIR NO. 1 SECTION (4 / S1-1 S2-10, S1-2, S1-3)

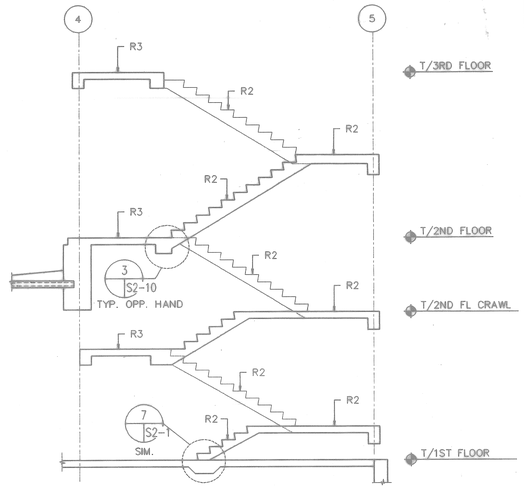

NOTE:
SEE DETAIL 2 FOR STAIR & LANDING SIZE AND REINFORCEMENT

STAIR NO. 2 SECTION (5 / S1-1 S2-10, S1-2, S1-3)

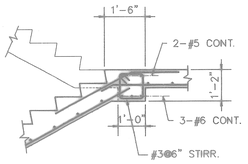

CONCRETE STAIR HEADER (3 / S2-10 S2-10)

SCALE: 1/2"=1'-0"

CONCRETE STAIR SLAB SCHEDULE						
MARK	THICK	BOTT. BARS	TOP BARS		TEMP. REINF.	REMARKS
			A	B		
R1	6"	#4@12"	#4@14"	#4@14"	#4@16"	
R2	8"	#5@8"	#4@12"	#4@12"	#5@12"	
R3	6"	#4@12"	#4@14"	---	#4@16"	

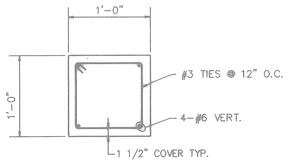

STUB COLUMN DETAIL AT STAIR NO.1 (6 / S1-1 S2-10, S1-2)

SCALE: 1 1/2"=1'-0"

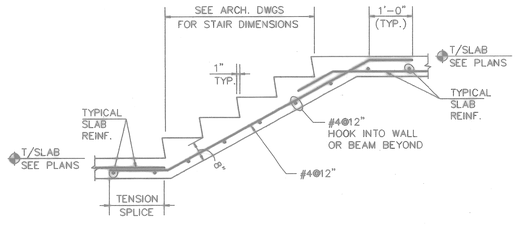

STAIR SECTION (7 / S1-1 S2-10, S1-2)

SCALE: 3/4"=1'-0"

Filename: P:\PAPER\JSPS2-10
Datetime: 08/17/94 13:46:44 OJ - PLOTPUMP

6	TL	08/17	PS Item:0
5	TL	08/09	PS Item:0
4	JL	2006/01	MB Item:0
3	JL	2006/01	PS Item:0

FOR OFFICIAL USE ONLY

RECORD DRAWING
DATE 06/08/98

07-31-97 AS-BUILT, NO CORRECTIONS

Knight Architects Engineers Planners, Inc.
Joint Venture Partners
Chicago, IL 60607
A Joint Venture of:
Knight Architects Engineers Planners, Inc. Company
A Company of Tippetts-Abbett-McCarthy-Stratton, Inc.

DEPARTMENT OF THE NAVY — NAVAL FACILITIES ENGINEERING COMMAND
SOUTHERN DIVISION
CHARLESTON, S.C.

NAVAL TRAINING CENTER — GREAT LAKES, ILLINOIS

DAMAGE CONTROL SCHOOL
FIREFIGHTING TRAINER
CONCRETE STAIRS

DSGN BUSCH or MARSZALEK CHK SWANSON
SUP WALKINGTON Dr. ENGR
SUBMITTED BY — DATE
EIC — SR
FPE — DR
APPROVED — DATE
OFFICER IN CHARGE
APPROVED — DATE
DIR. FOR COORDINATE MANFAC

SIZE	CODE IDENT NO.	MANFAC DRAWING NO.	DRAWING NO.
F	80091	5276537	S2-10
		CONTR CONTR NO. N62467-93-C-1143	
SCALE AS NOTED		SPEC 06-93-1143	SHEET 112 OF

STATE OF ILLINOIS
RONALD E. WALKINGTON
01-3542
REGISTERED STRUCTURAL ENGINEER
CHICAGO, ILLINOIS

Ronald E. Walkington EXP 11-30-94
8-31-94

ARCH. & ENGR. SEAL

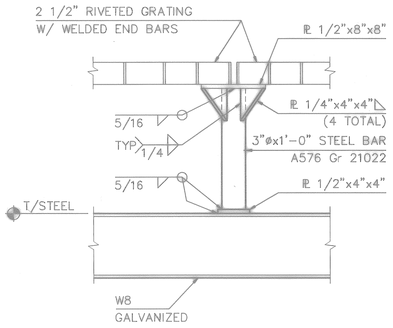

PIT FIRE GRATING POST (1)
SCALE: 1 1/2"=1'-0" S1-10|S2-11

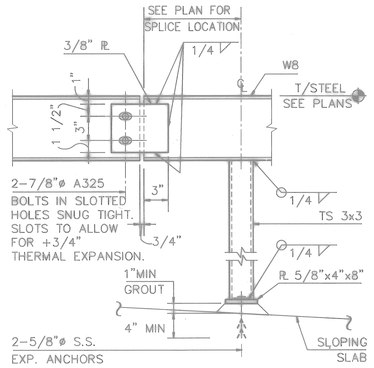

POST AND SPLICE (2)
SCALE: 1 1/2"=1'-0" S1-10|S2-11

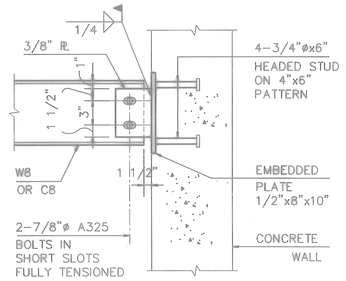

BEAM TO CONC. WALL CONN. (3)
SCALE: 1 1/2"=1'-0" S1-10|S2-11

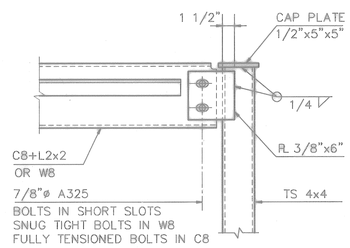

BEAM TO POST CONN. (4)
SCALE: 1 1/2"=1'-0" S1-10|S2-11

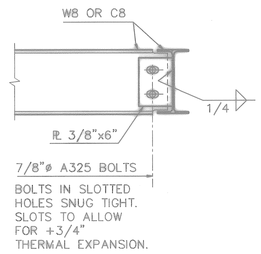

8" BEAM FRAME CONN. (5)
SCALE: 1 1/2"=1'-0" S1-10|S2-11

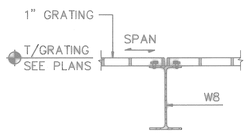

W8 BEAM AND GRATING (6)
SCALE: 1 1/2"=1'-0" S1-10|S2-11

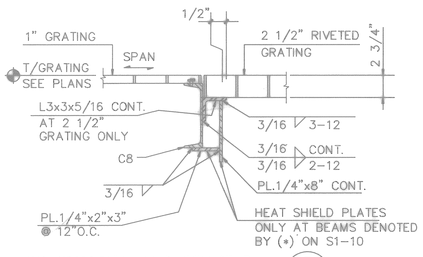

C8 CHANNEL AND GRATING (7)
SCALE: 1 1/2"=1'-0" S1-10|S2-11

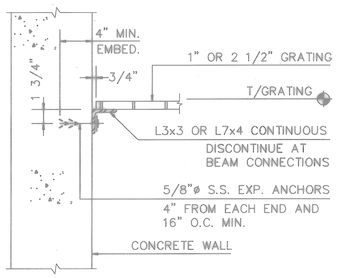

CONC WALL AND GRATING (8)
SCALE: 1 1/2"=1'-0" S1-10|S2-11 S1-3

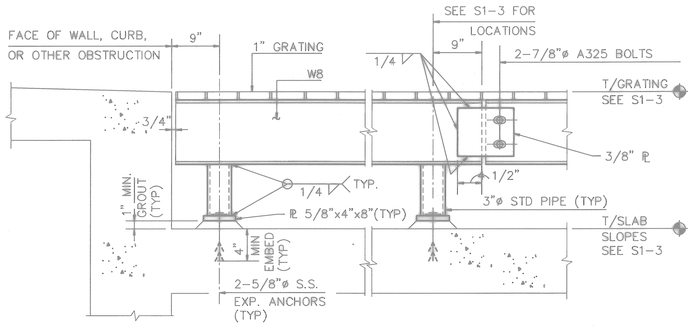

THIRD FLOOR STEEL FRAMING (9)
SCALE: 1 1/2"=1'-0" S1-3|S2-11

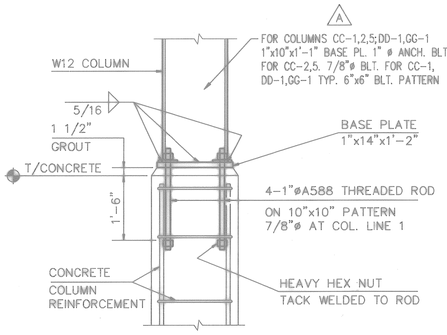

FIREFIGHTING TRAINER STEEL COUMN BASE (10)
SCALE: 1"=1'-0" S2-6|S2-11

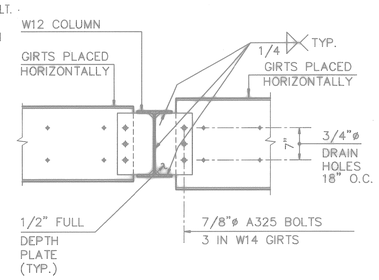

GIRT TO COLUMN CONN. (11)
SCALE: 1"=1'-0" S2-6|S2-11

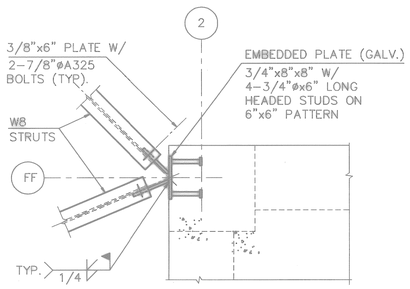

NOTE: SIMILAR DETAIL APPLIES AT GG-2

STRUT TO CONC. COL. CONN. (12)
SCALE: 1"=1'-0" S1-3|S2-11 S1-4

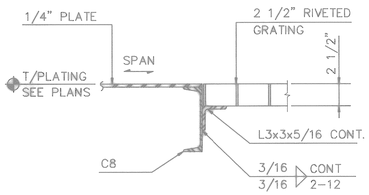

C8 CHANNEL AND PLATING (13)
SCALE: 1 1/2"=1'-0" S1-10|S2-11

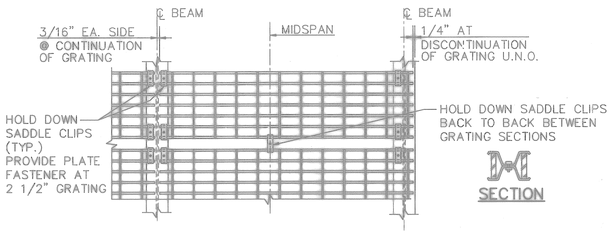

TYP. GRATING PLAN (14)
SCALE: NONE S1-10|S2-11

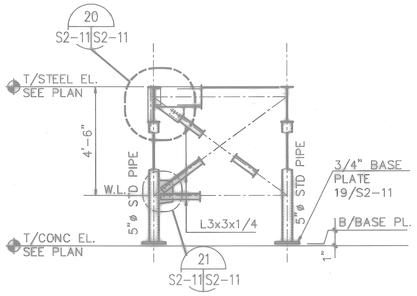

HVAC PLATFORM X-BRACING (16)
SCALE: 3/8"=1'-0" S1-2|S2-11 S1-4

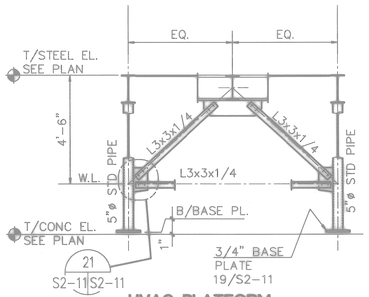

HVAC PLATFORM CHEVRON BRACE (17)
SCALE: 3/8"=1'-0" S1-4|S2-11

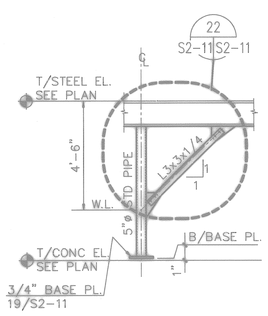

HVAC PLATFORM K-BRACE (18)
SCALE: 3/8"=1'-0" S1-2|S2-11 S1-4

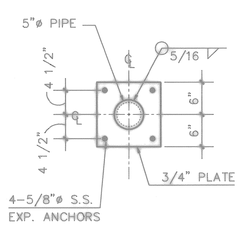

POST BASE PLATE DETAIL (19)
SCALE: 1"=1'-0" S2-11|S2-11

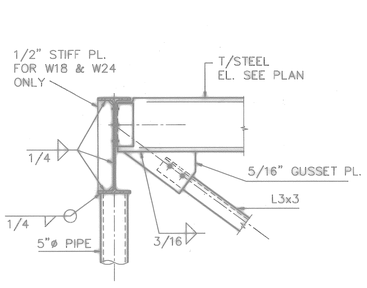

HVAC PLATFORM DETAIL (20)
SCALE: 1"=1'-0" S2-11|S2-11

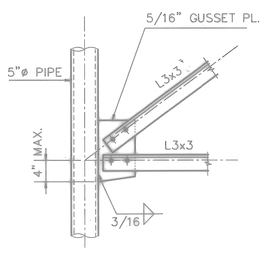

HVAC PLATFORM DETAIL (21)
SCALE: 1"=1'-0" S1-2|S2-11

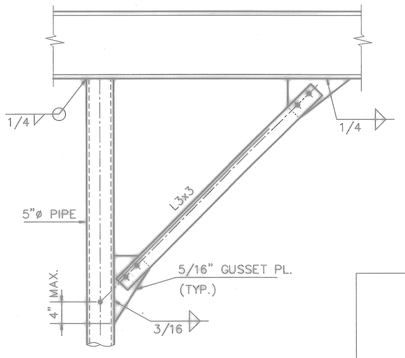

HVAC PLATFORM DETAIL (22)
SCALE: 1"=1'-0" S2-11|S2-11

NOTE:

1. ALL STEEL MEMBERS, PLATES, STUDS, GRATINGS, NUTS AND BOLTS SHOWN ON DETAILS 1-9, 13, 14 SHALL BE GALVANIZED EXCEPT FOR:
   A) EXPANSION ANCHORS – STAINLESS STEEL
   B) 2 1/2" GRATING – PLAIN STEEL
   C) PIT FIRE GRATING POST – PLAIN STEEL

FOR OFFICIAL USE ONLY

RECORD DRAWING
DATE 06/08/98

DATE 07-31-97 ISSUE CORRECTED TO AS-BUILT BY JTL INITIAL D.A.N.

Knight Architects Engineers Planners, Inc.
549 West Randolph Street
Chicago, IL 60661
Established 1910
A Leader in Design & Innovation, Inc. Company
Copyright 1994 Knight Architects Engineers Planners, Inc.

DSGN BUSCH DR JAZMIN CH SWANSON
SUPV WALKINGTON CH ENGR
SUBMITTED BY DATE
FIRM MEMBER TITLE
EIC BR HD
FPE DIR
APPROVED DATE
OFFICER IN CHARGE
APPROVED DATE
EFD FOR COMMANDER, NAVFAC

ARCH. & ENGR. SEAL

DEPARTMENT OF THE NAVY — NAVAL FACILITIES ENGINEERING COMMAND
SOUTHERN DIVISION
CHARLESTON, S.C.

NAVAL TRAINING CENTER — GREAT LAKES, ILLINOIS

DAMAGE CONTROL SCHOOL
FIREFIGHTING TRAINER
STEEL CONNECTIONS

SIZE	CODE IDENT NO.	NAVFAC DRAWING NO.	DRAWING NO.
F	80091	5276538	S2-11
SCALE AS NOTED		CONSTR CONTR NO. N62467-93-C-1143	
		SPEC 06-93-1143	SHEET 113 OF

Filename: P:\PAPER\CHANGED\JTL\JSPS2-11
User: TWhite
Date&time: 10/30/97 14:52:02

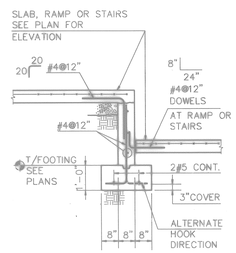

FOUNDATION WALL AT SLAB ELEVATION CHANGE (1)
SCALE: 1/2"=1'-0" S1-1, S1-5 S3-1

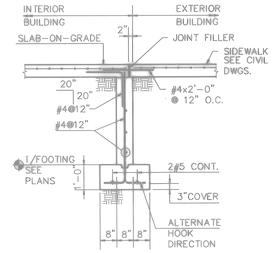

FOUNDATION WALL BLDG ENTRANCE (2)
SCALE: 1/2"=1'-0" S1-6 S5-1

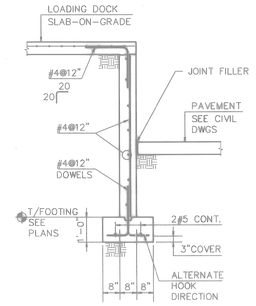

FOUNDATION WALL LOADING DOCK (3)
SCALE: 1/2"=1'-0" S1-6 S3-1

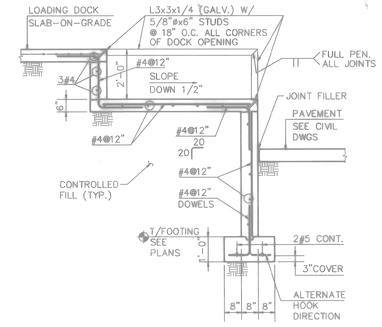

LOADING DOCK (4)
SCALE: 1/2"=1'-0" S1-6 S3-1

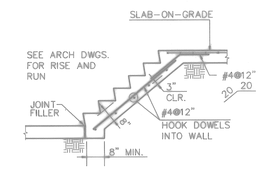

TYPICAL CONCRETE STAIR (5)
SCALE: 1/2"=1'-0" S1-1, S1-5, S1-6 S3-1

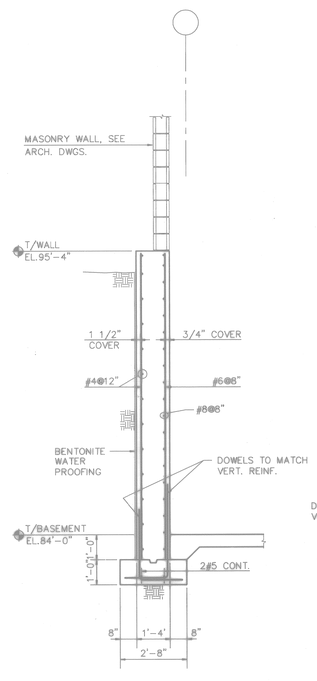

FOUNDATION WALL AT STAIR #3 (6)
SCALE: 1/2"=1'-0" S1-5, S1-6 S3-1

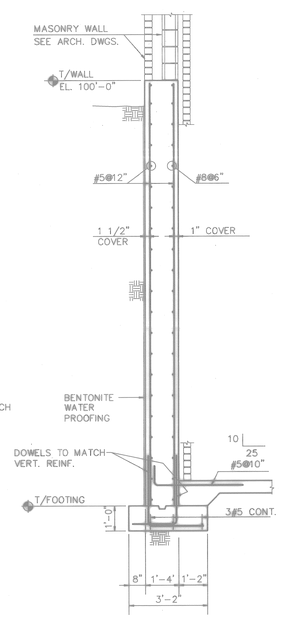

FOUNDATION WALL AT STAIR #4 (7)
SCALE: 1/2"=1'-0" S1-5, S1-6 S3-1

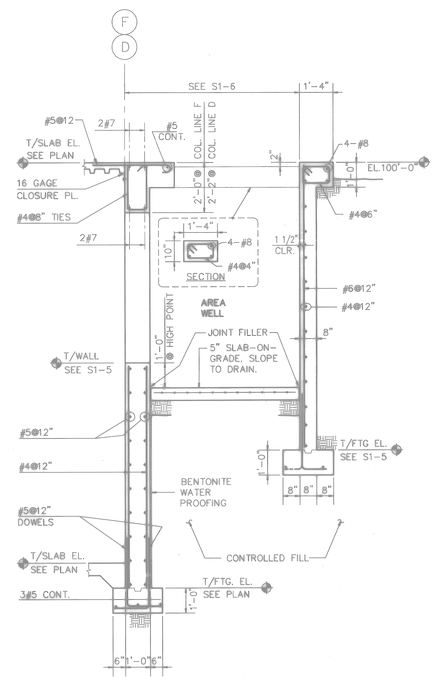

FOUNDATION WALL AT AREA WELL (8)
SCALE: 1/2"=1'-0" S1-6 S3-1

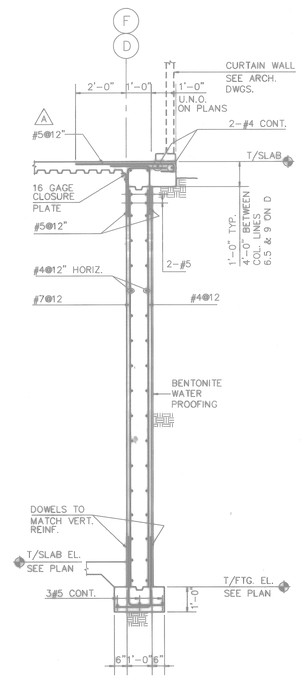

FOUNDATION WALL AT COL. LINES D & F (10)
SCALE: 1/2"=1'-0" S1-5, S1-6 S3-1

Date&time: 10/30/97 14:55:10 User: TWhite Filename: P:\PAPER\CHANGED\TIL\SPS3-01

FOR OFFICIAL USE ONLY

RECORD DRAWING
DATE 06/08/98

07-31-97	CORRECTED TO AS-BUILT	BY TIL	INITIAL

Kinsley Architects Engineers Planners, Inc. 1000 Lafayette Street Charleston, S. 29201 Established in 1949
Kinsley Kirkland & Associates, Inc. Company
A Company with Kirkland Associates Engineers Planners, Inc.

DESIGN BUSCH CD JAZMIN CHK SWANSON
DRAWN WALKINGTON DSN ENGR
SUBMITTED BY DATE
FIRM MEMBER TITLE
EIC DR NO.
FPE DR
APPROVED DATE
OFFICER IN CHARGE
APPROVED DATE
EFD FOR COMMANDER, NAVFAC

ARCH. & ENGR. SEAL

DEPARTMENT OF THE NAVY
NAVAL FACILITIES ENGINEERING COMMAND
SOUTHERN DIVISION
CHARLESTON, S.C.

NAVAL TRAINING CENTER GREAT LAKES, ILLINOIS

DAMAGE CONTROL SCHOOL FOUNDATION SECTIONS

SIZE	CODE IDENT NO.	NAVFAC DRAWING NO.	DRAWING NO.
F	80091	5276539	S3-1
		CONTR CONTR NO. N62467-93-C-1143	
SCALE AS NOTED		SPEC 08-93-1143	SHEET 114 OF

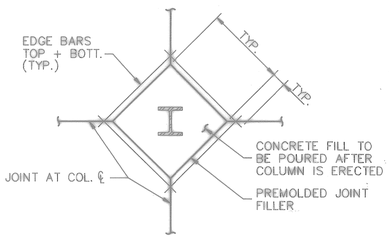

TYPICAL STEEL COLUMN ISOLATION JOINT AT SLAB-ON-GRADE 6 S3.3

SCALE: NONE

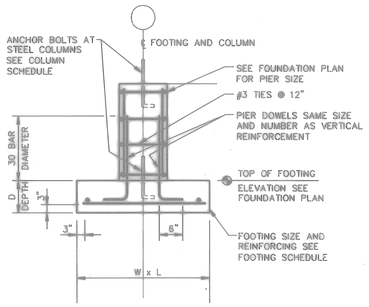

TYPICAL STEEL COLUMN PIER 7 S3.3

SCALE: NONE

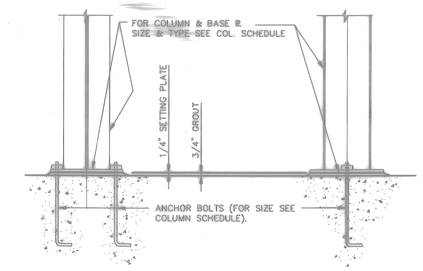

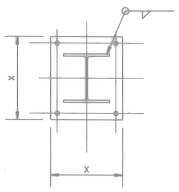

TYPE [BASE PLATE

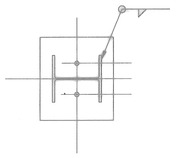

TYPE [BASE PLATE

TYPICAL STEEL COLUMN BASE 8 S3.3

SCALE: NONE

A AFFECTS ENTIRE SHEET

FOR OFFICIAL USE ONLY

RECORD DRAWING
DATE 06/08/98

A DATE 07-31-97 ISSUE CORRECTED TO AS-BUILT BY JTL INITIAL [illegible] 05/25/98

Knight Architects Engineers Planners, Inc.
549 West Randolph Street
Chicago, IL 60661
Established in 1945
A Lester B. Knight & Associates, Inc. Company
© Copyright 1994 Knight Architects Engineers Planners, Inc.

DSGN BUSCH DR JAZMIN CHK SWANSON
SUP WALKINGTON CH ENGR
SUBMITTED BY DATE
FIRM MEMBER TITLE
E/C ___ SR HD ___
FPE ___ DIR ___
APPROVED DATE
OFFICER IN CHARGE
APPROVED DATE
EFD FOR COMMANDER, NAVFAC

ARCH. & ENGR. SEAL

DEPARTMENT OF THE NAVY — NAVAL FACILITIES ENGINEERING COMMAND
SOUTHERN DIVISION
CHARLESTON, S.C.

NAVAL TRAINING CENTER — GREAT LAKES, ILLINOIS

DAMAGE CONTROL SCHOOL
FOUNDATION SECTIONS
... SECTIONS AND DETAILS

SIZE	CODE IDENT NO.	NAVFAC DRAWING NO.	DRAWING NO.
F	80091	5354851	S3-1A
		CONSTR CONTR NO. N62467-93-C-1143	
SCALE NS NOTED		SPEC 06-93-1143	SHEET 115 OF

Date&time: 10/30/97 15:09:43 User: TWhite Filename: P:\PAPER\CHANGED\JTL\JSPS3-1A

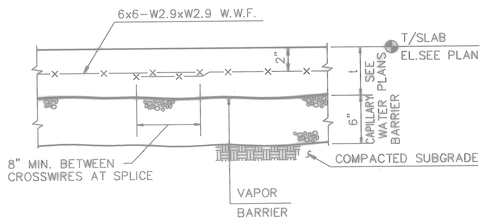

TYPICAL SLAB-ON-GRADE (1 / S1-5 S3-2)
SCALE: NONE

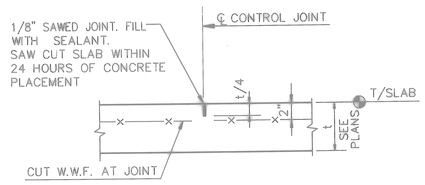

NOTE:
PROVIDE CONTROL JOINTS AS SHOWN ON PLANS AND AT MAXIMUM SPACING OF 36t.

TYPICAL CONTROL JOINT (2 / S1-5 S3-2)
SCALE: NONE

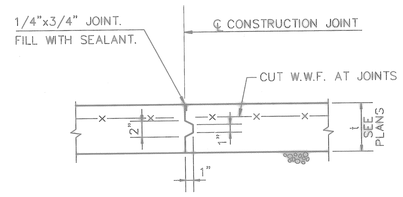

TYPICAL CONSTRUCTION JOINT (3 / S1-5 S3-2)
SCALE: NONE

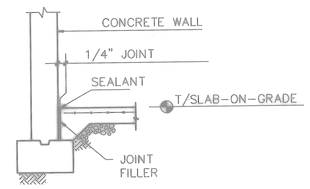

TYPICAL WALL ISOLATION JOINT (4 / S1-5 S3-2)
SCALE: NONE

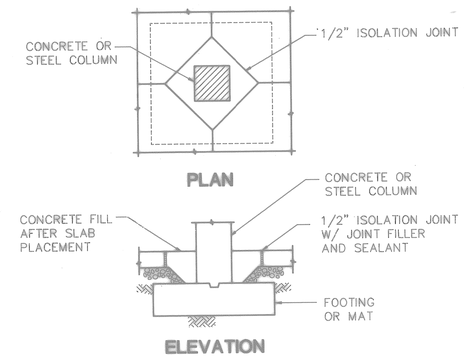

TYPICAL COLUMN ISOLATION JOINT (4,4A / S1-5 S3-2)
SCALE: NONE

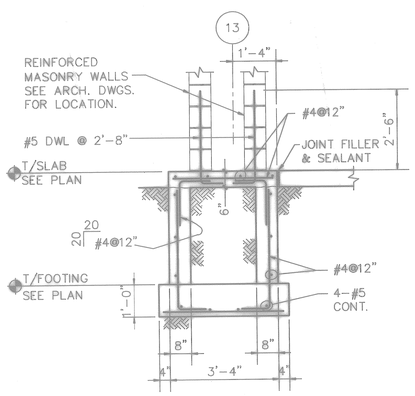

WALL FOUNDATION-COL. LINE 13 (5 / S1-6 S3-2)
SCALE: 1/2=1'-0"

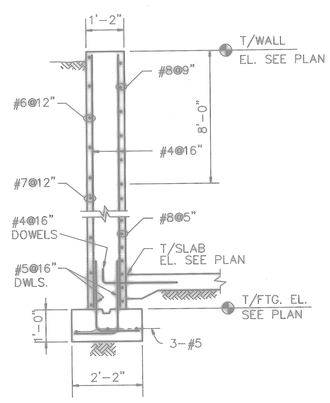

AREA WELL SECTION (6 / S1-5 S3-2, S1-6)
SCALE: 1/2"=1'-0"

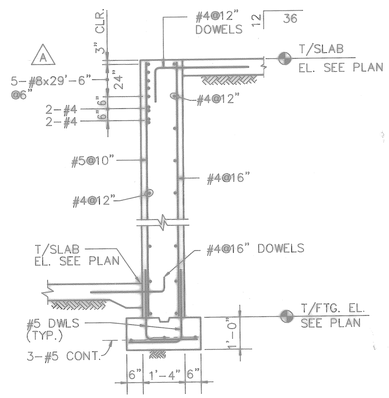

AREA WELL SECTION (7 / S1-5 S3-2, S1-6)
SCALE: 1/2"=1'-0"

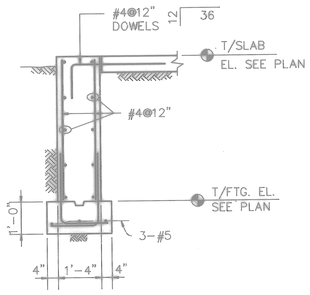

HAZ. STORAGE BLDG FOUNDATION WALL (8 / S1-6 S3-2)
SCALE: 1/2"=1'-0"

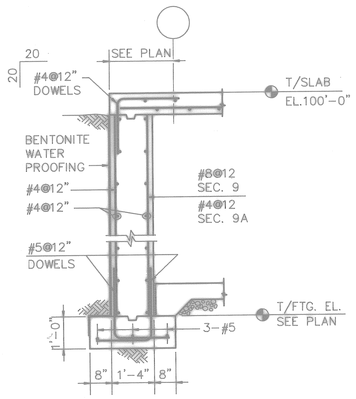

DCT BUILDING FOUNDATION WALL SECTION (9,9A / S1-5 S3-2, S1-6)
SCALE: 1/2"=1'-0"

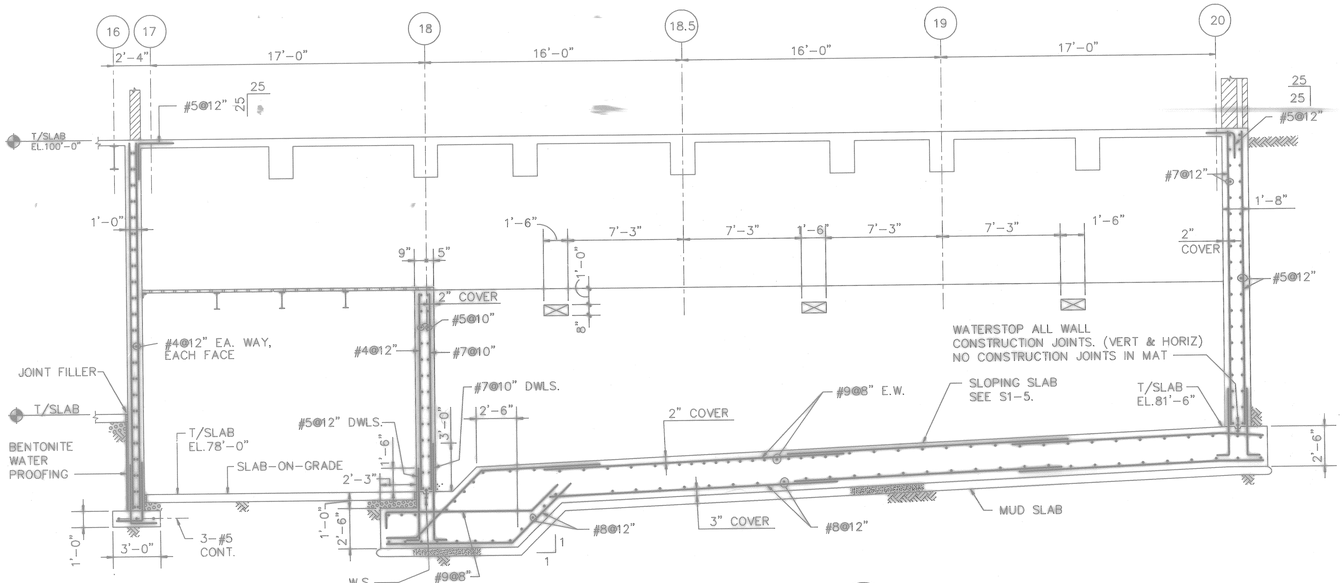

MAT FOUNDATION (11 / S1-5 S3-2)
SCALE: 1/4"=1'-0"

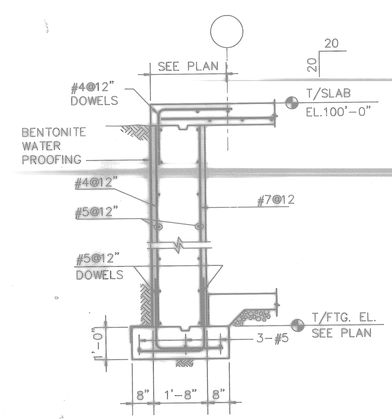

DCT BUILDING FOUNDATION WALL SECTION (10 / S1-5 S3-2, S1-6)
SCALE: 1/2"=1'-0"

FOR OFFICIAL USE ONLY

RECORD DRAWING
DATE 06/08/98

DATE 07-31-97 ISSUE CORRECTED TO AS-BUILT BY STL INITIAL

Knight Architects Engineers Planners, Inc.
549 West Randolph Street
Chicago, IL 60661
Established in 1908
A Leader in A.E.P. & Associates, Inc. Company
Acquired 1997 Knight Architects Engineers Planners, Inc.

DSGN. BUSCH DR MARSZALEK CHK SWANSON
SUPV WALKINGTON CH. ENGR
SUBMITTED BY DATE
FIRM MEMBER TITLE
EIC BR HD
FPE DIR
APPROVED DATE
OFFICER IN CHARGE
APPROVED DATE
FFD FOR COMMANDER, NAVFAC

ARCH. & ENGR. SEAL

DEPARTMENT OF THE NAVY
NAVAL FACILITIES ENGINEERING COMMAND
SOUTHERN DIVISION
CHARLESTON, S.C.
NAVAL TRAINING CENTER GREAT LAKES, ILLINOIS

DAMAGE CONTROL SCHOOL FOUNDATION SECTIONS

SIZE	CODE IDENT NO.	NAVFAC DRAWING NO.	DRAWING NO.
F	80091	5276540	S3-2
SCALE AS NOTED		CONSTR CONTR NO. N62467-93-C-1143	
		SPEC 08-93-1143	SHEET 116 OF

Date&time: 10/30/97 14:57:32 User: TWhite Filename: P:\PAPER\CHANGED\JTL\JSPS3-02

9/1