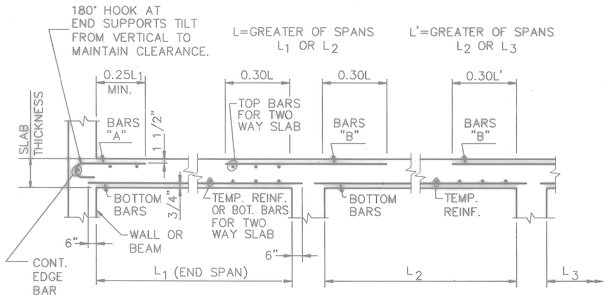

TYPICAL SLAB BAR PLACING DIAGRAM (1 / S3-3)

SCALE: NONE

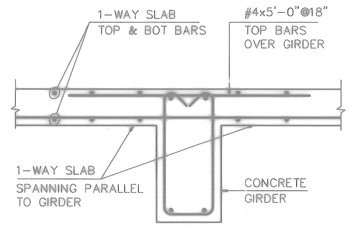

ADD'L TOP BARS OVER GIRDER (2 / S3-3)

SCALE: 3/4"=1'-0"

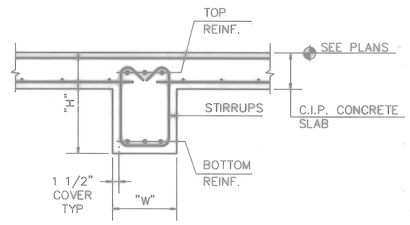

TYP. BEAM SECTION (3 / S3-3)

SCALE: 3/4"=1'-0"

NOTE: SEE BAR PLACING DIAGRAM ON S2-8

BEAM SCHEDULE

MARK	SIZE WIDTH "W"	SIZE DEPTH "H"	REINFORCING STEEL BOTTOM BARS	TOP BARS LEFT SUPPORT	TOP BARS RIGHT SUPPORT	END STIRRUPS SIZE	END STIRRUPS TYPE	END STIRRUPS SPACING	MIDDLE STIRRUPS SIZE	MIDDLE STIRRUPS TYPE	MIDDLE STIRRUPS SPACING	REMARKS
DB1	10	14	2-#5	2-#5	CONT.	#4	⊔	6	#4	⊔	6	
DB2	12	18	3-#6	2-#5	3-#6	#4	⊔	6	#4	⊔	8	
DB3	12	18	3-#6	---	2-#5	#4	⊔	6	#4	⊔	8	
DB4	18	30	9-#8	3-#7	10-#8	#4	⊔	6	#4	⊔	14	2 LAYERS
DB5	18	30	4-#7	---	3-#7	#4	⊔	12	#4	⊔	14	
DB6	18	30	9-#8	3-#7	11-#8	#4	⊔	6	#4	⊔	14	2 LAYERS
DB7	18	30	4-#8	---	3-#7	#4	⊔	8	#4	⊔	14	
DB8	18	30	9-#8	3-#7	8-#8	#4	⊔⊔	9	#4	⊔⊔	9	2 LAYERS
DB9	18	30	7-#8	---	5-#8	#4	⊔⊔	6	#4	⊔⊔	6	2 LAYERS
DB10	18	30	7-#8	---	---	#4	⊔⊔	6	#4	⊔⊔	6	
DB11	18	30	10-#8	8-#8	4-#7	#4	⊔⊔	9	#4	⊔⊔	9	2 LAYERS
DB12	18	30	5-#7	4-#7	4-#7	#4	▢	12	#4	▢	12	
DB13	18	30	3-#7	---	3-#7	#4	▢	12	#4	▢	12	
DB14	18	30	3-#7	---	---	#4	▢	12	#4	▢	12	
DB15	14	20	3-#7	3-#7	3-#7	#4	▢	8	#4	▢	8	
DB16	14	20	3-#6	---	3-#6	#4	▢	8	#4	▢	8	
DB17	14	20	3-#6	---	---	#4	▢	8	#4	▢	8	
DB18	18	30	6-#8	5-#8	6-#8	#4	▢	12	#4	▢	12	4-RT. TOP BARS CONT. OVER DB19
DB19	18	30	3-#7	---	---	#4	▢	12	#4	▢	12	
DB20	18	30	7-#8	6-#8	8-#8	#4	▢	8	#4	▢	12	
DB21	18	30	3-#8	---	3-#7	#4	▢	12	#4	▢	12	
DB22	18	30	6-#8	3-#7	7-#8	#4	▢	12	#4	▢	12	5-RT. TOP BARS CONT. OVER DB19
DB23	18	30	8-#8	6-#8	8-#8	#4	▢	6	#4	▢	12	
DB24	18	30	4-#8	---	3-#7	#4	▢	12	#4	▢	12	
DB25	12	18	3-#7	2-#7	2-#7	#4	⊔	8	#4	⊔	6	
DB26	12	18	2-#7	3-#7	3-#7	#4	⊔	8	#4	⊔	8	

CONCRETE ONE WAY SLAB SCHEDULE

MARK	THICK	BOTT. BARS	TOP BARS "A"	TOP BARS "B"	TEMP. REINF.	REMARKS
DS1	6	#4@12	#5@12	#5@9	#4@12	·
DS2	6	#4@12	*	#5@9	#4@12	·
DS3	6	#4@12	#5@12	*	#4@12	·
DS4	6	#5@9	#5@9	#5@9	#4@12 TOP&BOT.	·
DS5	8	#5@10	#5@12	#5@6	#4@12	·
DS6	8	#5@12	*	#5@9	#4@12	·
DS7	8	#5@12	*	*	#4@12	·
A DS8	14	#5@12	#5@9	#5@9	#4@10B #4@18T	·

* = SEE TOP BARS FROM BAY BEYOND

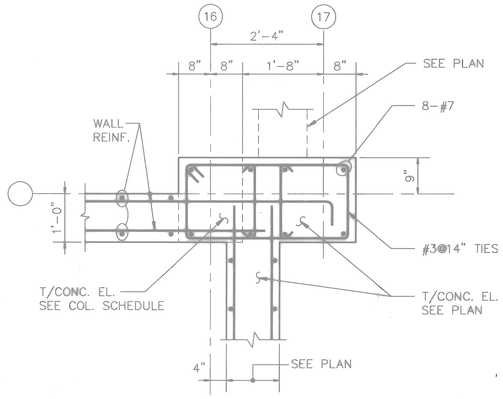

COLUMN SC6 (4 / S3-4 S3-3)

SCALE: 3/4"=1'-0"

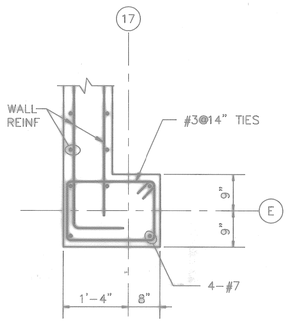

COLUMN SC7 (5 / S3-4 S3-3)

SCALE: 3/4"=1'-0"

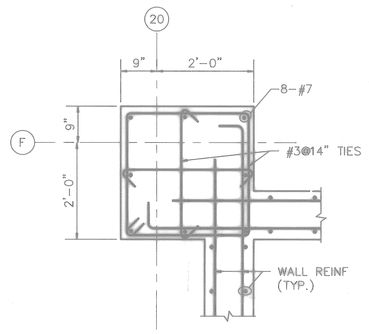

COLUMN SC8 (6 / S3-4 S3-3)

SCALE: 3/4"=1'-0"

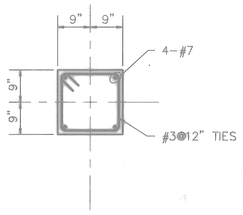

COLUMN SC9 (7 / S3-4 S3-3)

SCALE: 3/4"=1'-0"

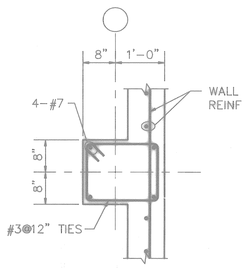

COLUMN SC10 (8 / S3-4 S3-3)

SCALE: 3/4"=1'-0"

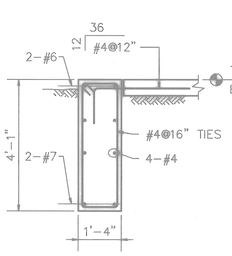

SECTION (9 / S1-6 S3-3)

SCALE: 1/2"=1'-0"

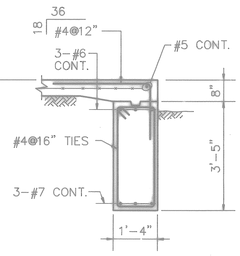

SECTION (10 / S1-6 S3-3)

SCALE: 1/2"=1'-0"

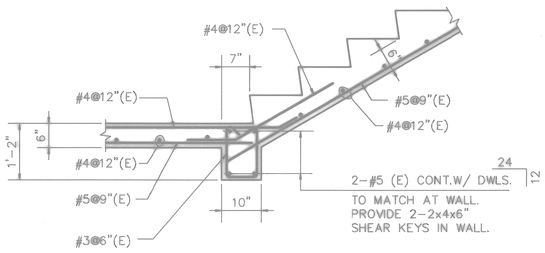

DETAIL (11 / S3-3 S3-3)

SCALE: 3/4"=1'-0"

(E): EPOXY COATED BARS

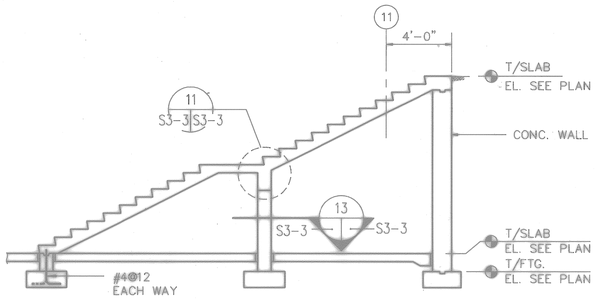

SECTION (12 / S1-6 S3-3)

SCALE: 1/4"=1'-0"

STAIR No.7, A2-16

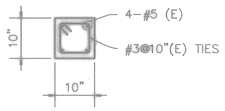

SECTION (13 / S3-2 S3-3)

SCALE: 3/4"=1'-0"

(E): EPOXY COATED BARS

FOR OFFICIAL USE ONLY

RECORD DRAWING
DATE 06/08/98

DATE 07-31-97 ISSUE CORRECTED TO AS-BUILT BY JTL INITIAL

Knight Architects Engineers Planners, Inc.
549 West Randolph Street
Chicago, IL 60661
Established in 1945
A Leader in Knight & Associates, Inc. Company
© Copyright 1997 Knight Architects Engineers Planners, Inc.

DEPARTMENT OF THE NAVY — NAVAL FACILITIES ENGINEERING COMMAND
SOUTHERN DIVISION
CHARLESTON, S.C.

NAVAL TRAINING CENTER — GREAT LAKES, ILLINOIS

DSGN BUSCH DR MARSZALEK CHK SWANSON
SUP WALKINGTON ENGR
SUBMITTED BY DATE
FIRM MEMBER TITLE
E/C BR HD
FPE DIR
APPROVED DATE
OFFICER IN CHARGE
APPROVED DATE
EFD FOR COMMANDER, NAVFAC

DAMAGE CONTROL SCHOOL CONCRETE BEAMS

SIZE	CODE IDENT NO.	NAVFAC DRAWING NO.	DRAWING NO.
F	80091	5276541	S3-3
		CONSTR CONTR NO. N62467-93-C-1143	
SCALE AS NOTED		SPEC 06-93-1143	SHEET 117 OF

ARCH. & ENGR. SEAL

Date&time: 10/30/97 15:00:09 User: TWhite Filename: P:\PAPER\CHANGED\JTL\SPS3-03

SUPPORT BUILDING/DCT BUILDING COLUMN SCHEDULE

	D8 D10 D11 D12 D13	E6 E16	E7 E12 E13 E14 E15	E8 E9 E10 E11	D6 D7 D9 D14 D15	C.4–13 F.3–13 F.6–13 G–13 H–13	C.4–14.1 G–14.1 H–14.1	F.6–14 F.6–14.5	C17 C18 C19 C20 G18 G19	D17 E20	F9 F9.5 F10 F10.5 F12 F11.5 F13 F12.5 F15 F15.5	D18.2 D18.8 E18.2 E18.8 F18.2 F18.8	G17 G20	E17 F17 F20 F21	D18 D19 D20 E18 E19 F18 F19		D16	F6 F7	GG–6 GG–7	A 9.9 A 11.1 B 9.9 B 11.1	F14 F14.5	D.4–21	F.7–14.4	F8 F7.5 F11 F8.5 F16	D9.5 D14.5 D15.6	D18.5 E18.5 F18.5
ROOF								W12x65													W10x33					
3rd FLOOR	W10x54	W12x40	W12x50	W12x50	W10x45		ENCASE BASE IN CONC TO EL.100'–0". SLOPE TO DRAIN AWAY FROM COLUMN.	3'–0"				W10x33 BEARING PLATE 10"x11"x1/2"					W10x45	W10x33		EL.122'–0"	3'–0"				
2nd FLOOR	2'–0"	3'–0"	3'–0"	3'–0"	2'–0"		W12x40 8x(GALV)	W12x65	W10x45	W10x49	W10x33		W10x33	W10x33	W12x65		2'–0"	3'–0"	W10x33 GG–6 GG–7	W10x60	W10x33	W12x65	TS 12x12x1/2	F16 W10x33		
1st FLOOR EL. 100'–0"		W12x65	W12x87	W12x96	U.N.O. SC1 – D6,D7	W12x40		SC12 – F.6–14.5 SC12 (SIM) – F.6–14.4		SC5 – E20 SC6 – D17	1'–3"			SC7 – E17 SC6 – F17	SC5 TYP. U.N.O. SC4–D20				5'–4" 1'–4"	4'–5"	1'–3"			SC6 – F16		
BASEMENT	SC1	NOTE 4	A			SC10	SC9		SC4 – C18,C19, G18,G19 SC2 – C17,C20		SC11		SC2	SC8 – F20 SC2 – F21			SC6		SC3	SC2	SC1	SC2	SC12	SC1 TYP U.N.O.	SC11	SC5
BASE PLATE (BxNxt)	14"x14"x1 3/4"	16"x16"x1 3/4"	18"x20"x1 3/4"	18"x20"x1 3/4"	12"x14"x1 1/4"	12"x14"x3/4"	12"x12 1/2" x3/4" (GALV)	14"x14"x1 1/4"	12"x14"x1 1/4"	12"x14"x1 1/4"	12"x14"x1 1/4"	–	12"x14"x1 1/4"	12"x14"x1 1/4"	14"x14"x1 1/4"		12"x14"x1 1/4"	14"x12"x1 1/4"	14"x12"x1 1/4"	12"x14"x1 1/4"	12"x14"x1 1/4"	14"x14"x1 1/4"	14"x20"x3/4"	12"x14"x1 1/4"		
NOTES	SEE DETAIL 2	SEE NOTE 1	SEE NOTE 1	SEE NOTE 1	SEE DETAIL 2		GALV ANCHOR BOLTS & NUTS				SEE DETAIL 2						SEE DETAIL 2	SEE NOTE 1	SEE DETAIL 2 FOR GG–7		SEE DETAIL 2		SEE DETAIL 11	SEE DETAIL 2		

NOTES:
1. ENCASE BASE PLATE IN CONCRETE AFTER POUR.
2. SEE S3–3 FOR CLOUMN TYPES SC6–SC10.
3. ENCASE BASE PLATE.
4. ENCASE COLUMN E16 IN CONCRETE. (A)

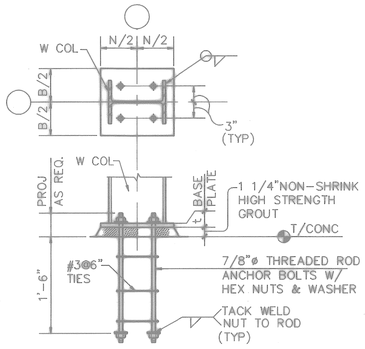

TYPICAL BASE PLATE DETAIL (1)
SCALE: 1"=1'–0" S3–4 S3–4

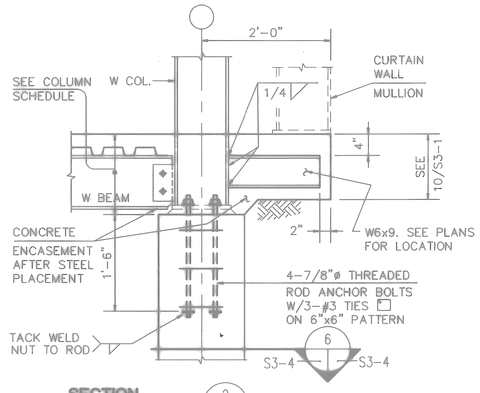

SECTION (2)
SCALE: 1"=1'–0" S3–4 S3–4

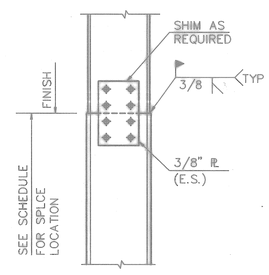

TYPICAL COLUMN SPLICE DETAIL (4)
SCALE: NONE S3–4 S3–4

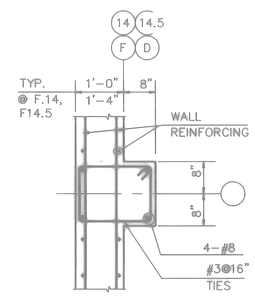

COLUMN SC1 (6)
SCALE: 3/4"=1'–0" S3–4 S3–4

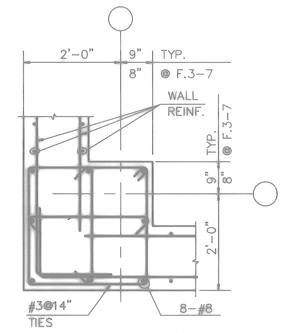

COLUMN SC2 (7)
SCALE: 3/4"=1'–0" S3–4 S3–4

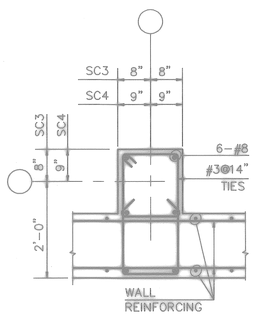

COLS. SC3 & SC4 (8)
SCALE: 3/4"=1'–0" S3–4 S3–4

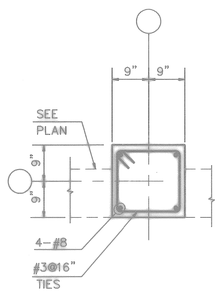

COLUMN SC5 (9)
SCALE: 3/4"=1'–0" S3–4 S3–4

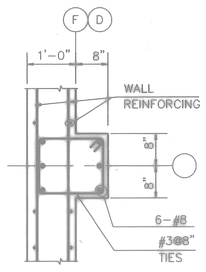

COLUMN SC11 (10)
SCALE: 3/4"=1'–0" S3–4 S3–4

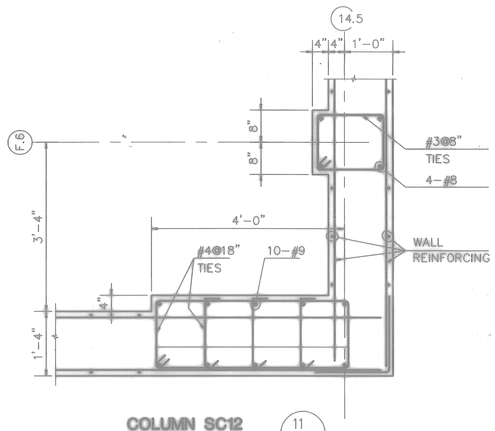

COLUMN SC12 (11)
SCALE: 3/4"=1'–0" S3–4 S3–4

FOR OFFICIAL USE ONLY

RECORD DRAWING
DATE 06/08/98

DATE 07-31-97 ISSUE CORRECTED TO AS-BUILT BY JTL INITIAL

Knight Architects Engineers Planners, Inc.
549 West Randolph Street
Chicago, IL 60661
Established in 1945
A Leader in Knight & Associates, Inc. Company
©Copyright 1997 Knight Architects Engineers Planners, Inc.

DEPARTMENT OF THE NAVY — NAVAL FACILITIES ENGINEERING COMMAND
SOUTHERN DIVISION
CHARLESTON, S.C.

NAVAL TRAINING CENTER — GREAT LAKES, ILLINOIS

DSGN BUSCH DR MARSZALEK CHK SWANSON
SUPV WALKINGTON CH ENGR
SUBMITTED BY DATE
FIRM MEMBER TITLE
EIC BR HD
FPC GIR
APPROVED DATE
OFFICER IN CHARGE
APPROVED DATE
EFD FOR COMMANDER, NAVFAC

DAMAGE CONTROL SCHOOL
COLUMN SCHEDULE AND DETAILS

SIZE	CODE IDENT NO.	NAVFAC DRAWING NO.	DRAWING NO.
F	80091	5276542	S3-4
		CONSTR CONTR NO. N62467-93-C-1143	
SCALE AS NOTED		SPEC 06-93-1143	SHEET 113 OF

ARCH. & ENGR. SEAL

Date&time: 10/30/97 15:02:27 User: TWhite Filename: P:\PAPER\CHANGED\JTL\JSPS3-04

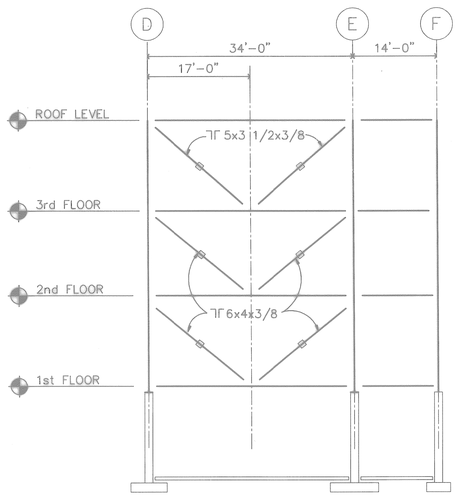

BRACING ELEVATION - COL. LINE 6 (A)
SCALE: 3/32"=1'-0" S1-6, S1-7, S1-8 S3-5

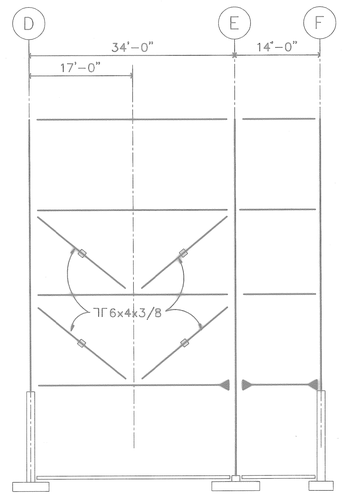

BRACING ELEVATION - COL. LINE 14 (B)
SCALE: 3/32"=1'-0" S1-6, S1-7 S3-5

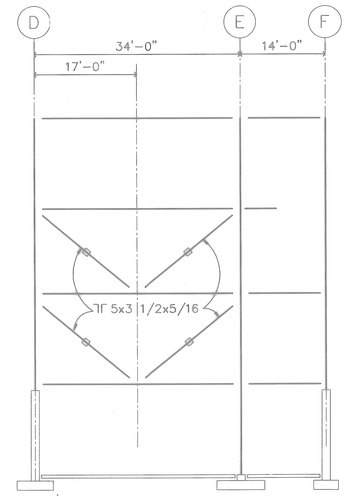

BRACING ELEVATION - COL. LINE 16 (C)
SCALE: 3/32"=1'-0" S1-6, S1-7 S3-5

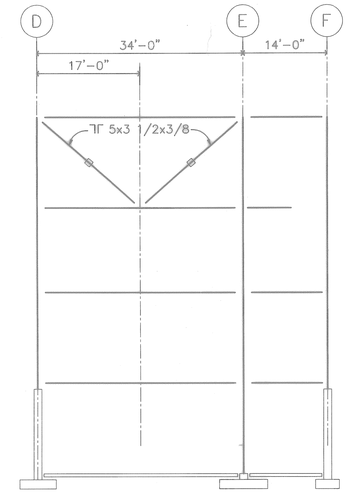

BRACING ELEVATION - COL. LINE 13 (D)
SCALE: 3/32"=1'-0" S1-8 S3-5

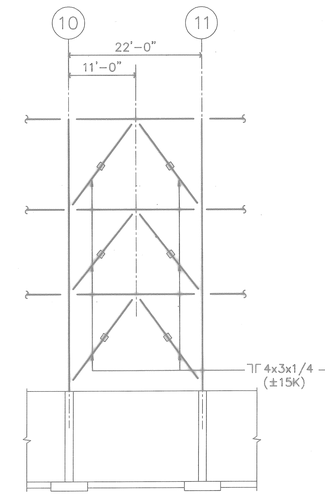

BRACING ELEVATION COL. LINE D (E)
SCALE: 3/32"=1'-0" S1-6 S3-5 S1-7 S1-8

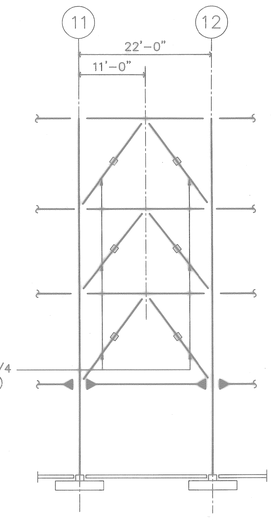

BRACING ELEVATION COL. LINE E (F)
SCALE: 3/32"=1'-0" S1-6 S3-5 S1-7 S1-8

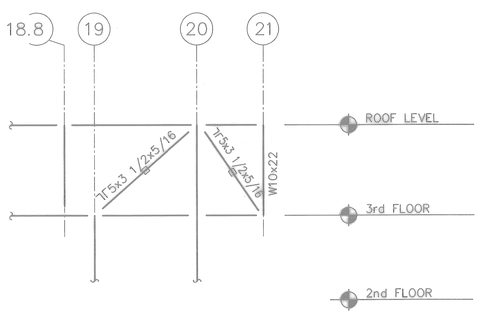

BRACING ELEVATION - COL. LINE D (G)
SCALE: 3/32"=1'-0" S1-8 S3-5

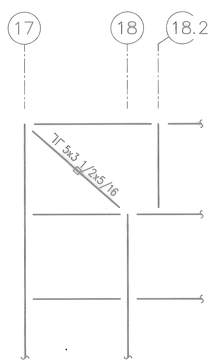

BRACING ELEVATION - COL. LINE F (H)
SCALE: 3/32"=1'-0" S1-8 S3-5

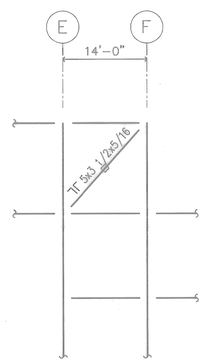

BRACING ELEVATION - COL. LINE 20 (J)
SCALE: 3/32"=1'-0" S1-8 S3-5

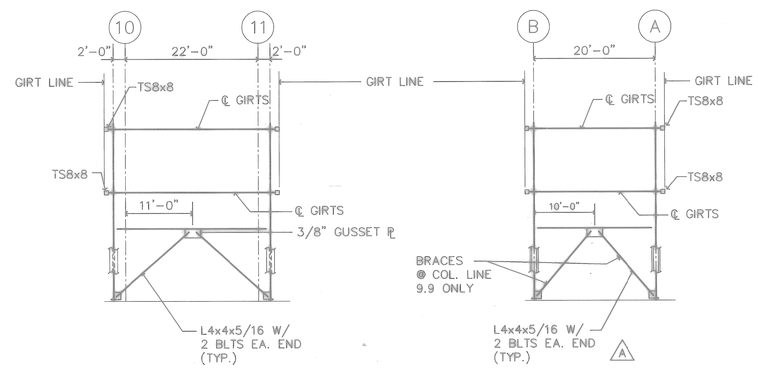

BRACING ELEVATION - COL. LINE A & B (K)
SCALE: 3/32"=1'-0" S1-7 S3-5

BRACING ELEVATION - COL. LINE 9.9 & 11.1 (L)
SCALE: 3/32"=1'-0" S1-7 S3-5

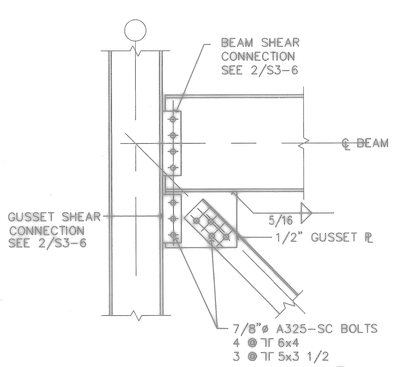

BRACING CONNECTION TO COLUMN (1)
SCALE: 1"=1'-0" S3-5 S3-5

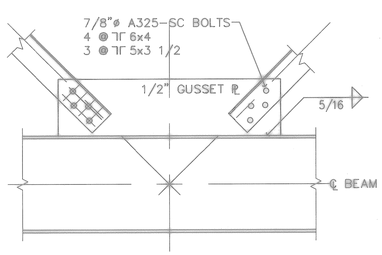

BRACING CONNECTION TO BEAM (2)
SCALE: 1"=1'-0" S3-5 S3-5

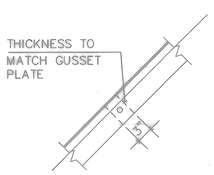

TYPICAL SPACER PLATE (3)
SCALE: 1"=1'-0" S3-5 S3-5

FOR OFFICIAL USE ONLY

RECORD DRAWING
DATE 06/08/98

DAO 05/25/98

1 DATE 07-31-97	ISSUE CORRECTED TO AS-BUILT	BY JTL	INITIAL

Knight Architects Engineers Planners, Inc.
540 West Madison Street
Chicago, IL 60661
(312) 876-1100
A Leader & Sutter & associates, Inc. Company
©Copyright 1996 Knight Architects Engineers Planners, Inc.

DEPARTMENT OF THE NAVY — NAVAL FACILITIES ENGINEERING COMMAND
SOUTHERN DIVISION
CHARLESTON, S.C.

NAVAL TRAINING CENTER — GREAT LAKES, ILLINOIS

DSGN BUSCH DR MARSZALEK CHK SWANSON
SUP WALKINGTON CH ENGR
SUBMITTED BY — DATE
FIRM MEMBER TITLE
E/C — BR HD
FPE — DIR
APPROVED — DATE
OFFICER IN CHARGE
APPROVED — DATE
FOR COMMANDER, NAVFAC

DAMAGE CONTROL SCHOOL
STEEL BRACING
ELEVATIONS AND DETAILS

SIZE	CODE IDENT NO.	NAVFAC DRAWING NO.	DRAWING NO.
F	80091	5276543	S3-5

CONSTR CONTR NO. N62467-93-C-1143
SCALE AS NOTED — SPEC 06-93-1143 — SHEET 119 OF

ARCH. & ENGR. SEAL

Date&time: 10/30/97 15:04:32 User: TWhite Filename: P:\PAPER\CHANGED\JTL\JSPS3-05

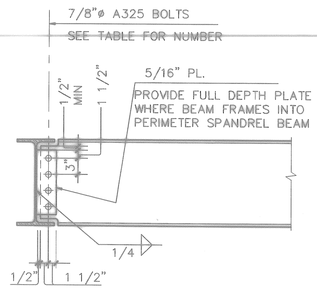

BEAM TO BEAM CONNECTION (1 / S3-6)
SCALE: 1"=1'-0"

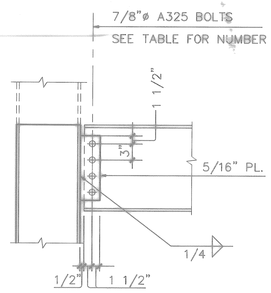

BEAM TO COLUMN FLANGE CONNECTION (2 / S3-6)
SCALE: 1"=1'-0"

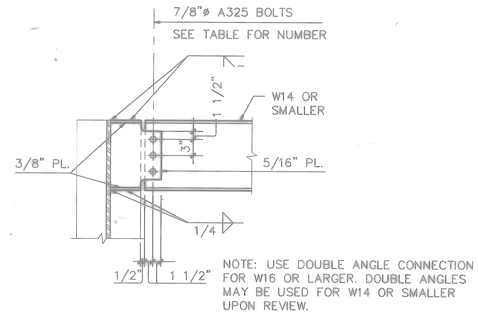

BEAM TO COLUMN WEB CONNECTION (3 / S3-6)
SCALE: 1"=1'-0"

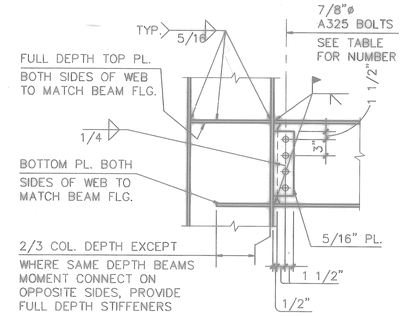

MOMENT CONNECTION (4 / S3-6)
SCALE: 1"=1'-0"

BEAM	#BOLTS	MAX REACTION
W8, W10	2	11 k
W12, W14	3	22 k
W16, W18	4	35 k
W21	5	49 k
W24	6	63 k
W27	7	76 k
W30	USE DOUBLE ANGLE CONN.	100K

NOTE: DOUBLE ANGLE CONNECTIONS WITH CAPACITIES GREATER THAN OR EQUAL TO THAT LISTED IN TABLE MAY BE USED IN PLACE OF A SHEAR TAB CONNECTION UPON REVIEW.

BEAM CONNECTION TABLE (5 / S3-6)
SCALE: NONE

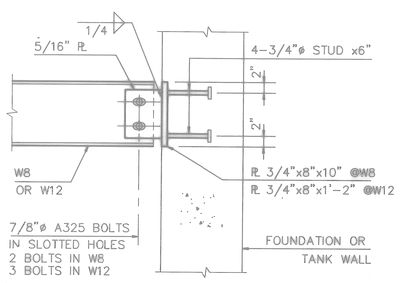

STEEL BEAM TO CONC. WALL (6 / S1-5 S3-6)
SCALE: 1"=1'-0"

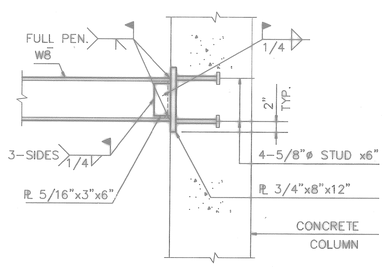

MOMENT CONNECTION TO CONCRETE COLUMN (7 / S1-5 S3-6)
SCALE: 1"=1'-0"

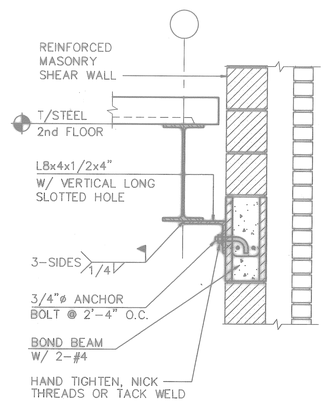

FLOOR BEAM TO MASONRY SHEAR WALL (8 / S1-7 S3-6)
SCALE: 1"=1'-0"

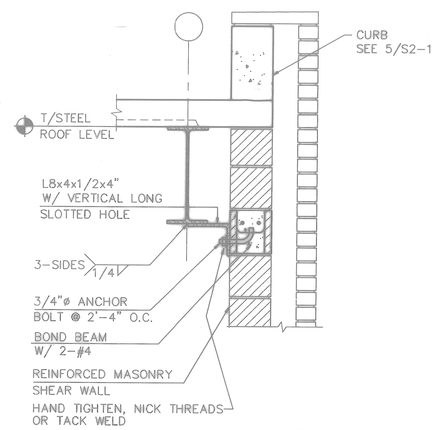

ROOF BEAM TO MASONRY SHEAR WALL (9 / S1-7 S3-6 / S1-8)
SCALE: 1"=1'-0"

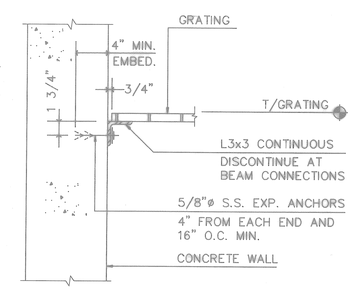

CONC WALL AND GRATING (10 / S1-5 S3-6)
SCALE: 1 1/2"=1'-0"

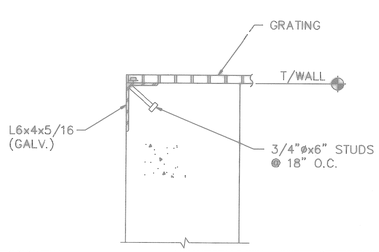

GRATING ON CONCRETE WALL (11 / S1-5 S3-6)
SCALE: NONE

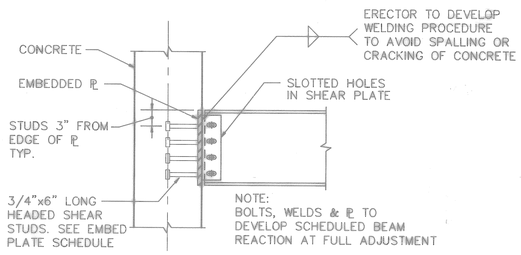

CORE WALL BEAM CONNECTION DETAIL (12 / S3-6)
SCALE: NONE

EMBEDDED PLATE SCHEDULE		
MAXIMUM BEAM SIZE	NUMBER OF SHEAR STUDS	EMBEDDED PLATE SIZE TxWxD
W21	8	3/4"x12"x1'-10"
W18, W16	6	3/4"x12"x1'-6"
W14, W12	4	3/4"x12"x1'-2"
W8, W10	4	3/4"x8"x10"

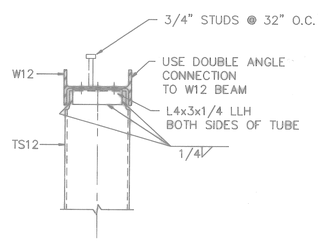

TUBE COLUMN TO BEAM (13 / S1-9 S3-6)
SCALE: 1"=1'-0"

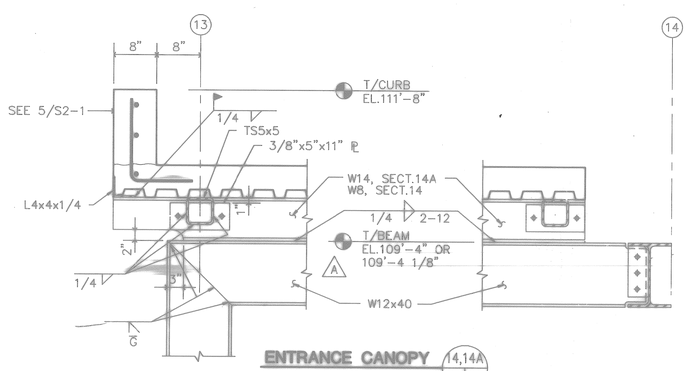

ENTRANCE CANOPY (14,14A / S1-7 S3-6)
SCALE: 1"=1'-0"

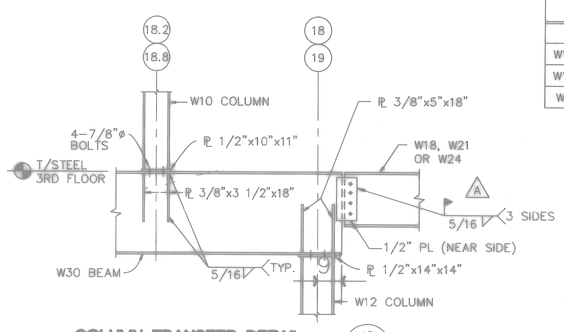

COLUMN TRANSFER DETAIL (15 / S1-8 S3-6)
SCALE: 1/2"=1'-0"

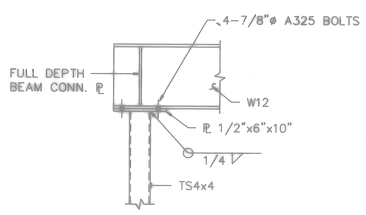

BEAM OVER TUBE CONNECTION (16 / S1-5 S3-6)
SCALE: 1"=1'-0"

FOR OFFICIAL USE ONLY

RECORD DRAWING
DATE 06/08/98

DATE	ISSUE	BY	INITIAL
07-31-97	CORRECTED TO AS-BUILT	JTL	

Knight Architects Engineers Planners, Inc.
249 West Randolph Street
Chicago, IL 60601
Consultant No. 5000
A Lester B. Knight & Associates, Inc. Company
©Copyright 1997 Knight Architects Engineers Planners, Inc.

DEPARTMENT OF THE NAVY — NAVAL FACILITIES ENGINEERING COMMAND
SOUTHERN DIVISION
CHARLESTON, S.C.

DSGN BUSCH DR JAZMIN CH SWANSON
SUPV WALKINGTON CH ENGR
SUBMITTED BY — DATE
FIRM MEMBER TITLE
EIC — BR HD
FPE — DR
APPROVED — DATE
OFFICER IN CHARGE
APPROVED — DATE
CO FOR COMMANDER NAVFAC

NAVAL TRAINING CENTER — GREAT LAKES, ILLINOIS

DAMAGE CONTROL SCHOOL STEEL CONNECTIONS

SIZE	CODE IDENT NO.	NAVFAC DRAWING NO.	DRAWING NO.
F	80091	5276544	S3-6
		CONSTR CONTR NO. N62467-93-C-1143	
SCALE AS NOTED		SPEC 06-93-1143	SHEET 120 OF

ARCH. & ENGR. SEAL

Date&time: 10/30/97 15:06:60 User: TWhite Filename: P:\PAPER\CHANGED\JTL\JSPS3-06

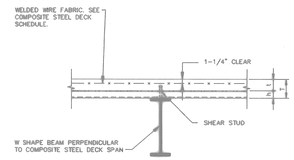

TYPICAL COMPOSITE STEEL DECK DETAIL

SCALE: NONE — 1 / S3-7

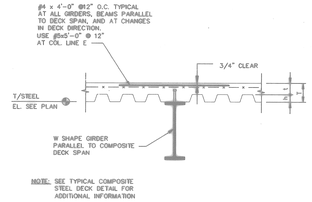

TYPICAL COMPOSITE STEEL DECK PARALLEL TO BEAM

SCALE: NONE — 2 / S3-7

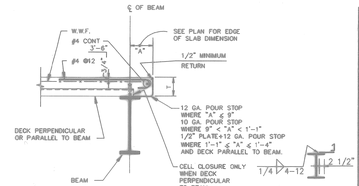

TYPICAL COMPOSITE STEEL DECK SLAB EDGE

SCALE: NONE — 3 / S3-7

COMPOSITE STEEL DECK SCHEDULE

MARK	DECK HEIGHT (INCHES) h	CONCRETE THICKNESS (INCHES) t	TOTAL SLAB DEPTH T	MINIMUM DECK PROPERTIES			REINFORCEMENT	CONC. WEIGHT (PCF)	REMARKS	MAX CLEAR SPAN	SUPERIMPOSED LOAD (PSF)	FINISH
				GAGE	I (IN 4)	S (IN 3)						
CD1	1 1/2	3 1/2	5	18	0.280	0.310	6x6-W2.9xW2.9	115	1st, 2nd, 3rd FLOOR COL LINES D TO E	7'-2"	250	G60 GALV.
CD2	1 1/2	3 1/2	5	20	0.190	0.220	6x6-W2.9xW2.9	115	1st, 2nd, 3rd FLOOR CORRIDOR	7'-2"	125	G60 GALV.
CD3	1 1/2	2 1/2 TO 6 1/2	4 TO 8	18	0.280	0.310	6x6-W2.9xW2.9	115	ROOF AREAS SLOPING SLAB	7'-6"	100	G60 GALV.
CD4	1 1/2	3 1/2	5	18	0.280	0.310	6x6-W2.9xW2.9	115	3rd FLOOR DAMAGE CONTROL TRAINER	7'-2"	250	G90, GALV. & PRIME PAINTED
CD5	3	2 TO 2 1/2	5 TO 5 1/2	20	0.950	0.570	6x6-W2.9xW2.9	145	UPPER DECK DAMAGE CONTROL TRAINER	6'-0"	125	G90, GALV. & PRIME PAINTED
CD6	1 1/2	2 1/2	4	16	0.370	0.400	6x6-W2.9xW2.9	115	ENTRANCE CANOPY	10'-0"	100	G90 GALV.
CD7	1 1/2	2 1/2 TO 6 1/2	4 TO 8	18	0.280	0.310	6x6-W2.9xW2.9	115	ROOF OVER DAMAGE CONTROL TRAINER	7'-6"	100	G90, GALV. & PRIME PAINTED

NOTES: 1.) SINGLE SPANS SHALL NOT BE USED.
2.) ALL WELDED WIRE FABRIC SHALL BE SHEETS PLACED ON CHAIRS.

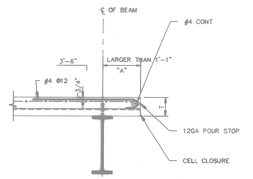

TYPICAL COMPOSITE SLAB EDGE AT CANTILEVER

SCALE: NONE — 4 / S3-7

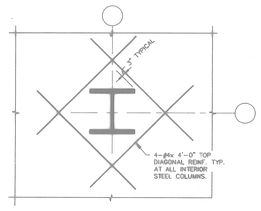

TYPICAL COMPOSITE STEEL DECK AT COLUMN

SCALE: NONE — 5 / S3-7

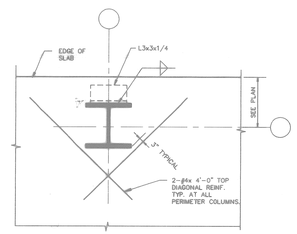

TYPICAL COMPOSITE DECK AT PERIMETER COLUMN

SCALE: NONE — 6 / S3-7

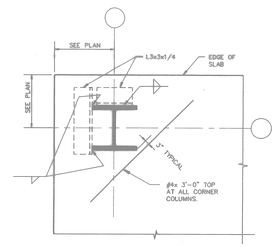

TYPICAL COMPOSITE DECK AT CORNER COLUMN

SCALE: NONE — 7 / S3-7

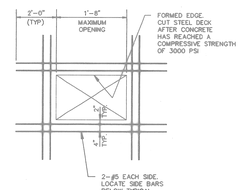

TYPICAL UNFRAMED COMPOSITE STEEL DECK SLAB OPENING

SCALE: NONE — 8 / S1-9 S3-7

NOTE: OPENINGS 8"ø OR LESS REQUIRE NO REINFORCEMENT.

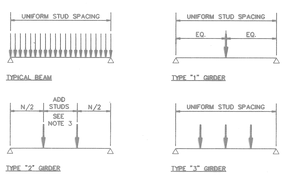

NOTES:

1. N EQUALS THE NUMBER OF SHEAR STUDS PER BEAM INDICATED THUS (20) ON PLAN.
2. ALL DIAGRAMS REPRESENT IDEALIZED CONDITIONS. ACTUAL FRAMING CONFIGURATIONS MAY REQUIRE ADDITIONAL INTERPRETATION.
3. MAXIMUM SPACING OF STUDS SHALL BE 24" O.C. IF STUD SPACING EXCEEDS 12" O.C., PROVIDE A 5/8" PLUG WELD BETWEEN STUDS.
4. FOR DECK RIBS PARALLEL TO BEAM, SPACE STUDS USING MINIMUM NUMBER OF LONGITUDINAL ROWS POSSIBLE WHILE MAINTAINING A MINIMUM LONGITUDINAL SPACING OF 4 1/2".
5. FOR DECK RIBS PERPENDICULAR TO BEAM, SPACE STUDS USING THE MINIMUM NUMBER OF LONGITUDINAL ROWS POSSIBLE AT A MINIMUM LONGITUDINAL SPACING EQUAL TO THE DECK RIB SPACING.

SHEAR STUD PLACEMENT DIAGRAM

SCALE: NONE — 9 / S3-7

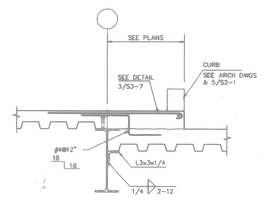

SLAB ELEVATION CHANGE

SCALE: NONE — 10 / S1-8 S3-7

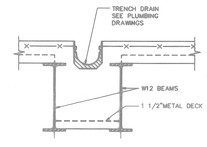

TRENCH DRAIN IN COMPOSITE DECK SLAB

SCALE: 1 1/2" = 1'-0" — 11 / S1-7 S3-7

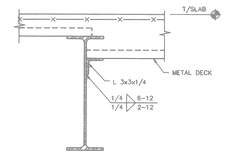

COMPOSITE DECK THICKENED SLAB

SCALE: 1 1/2" = 1'-0" — 12 / S1-6 S3-7

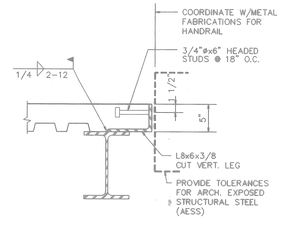

THIRD FLOOR CORRIDOR SLAB EDGE

SCALE: 1 1/2" = 1'-0" — 13 / S1-8 S3-7

Filename: P:\PAPER_USPS3-07 User: GJM Date&time: 08/31/94 10:36:52

REV	DATE	BY	APP
1	8-31-94	GJM	
2	9-30-94	GJM	

FOR OFFICIAL USE ONLY

RECORD DRAWING DATE 06/08/98

** DATE 97-11-17 AS-BUILT, NO CORRECTIONS BY B.L.P.

ROBERT MORRIS ASSOCIATES, Planners, Inc. / THE BOOR WILSON, Planners / Designers, Inc. / CHARLES A. HOSKIN / Planner & Interior Designer / FREDRIC L. MARSH, Architect, Inc. Company / FREDRIC MARSH ASSOCIATES, Planners/Planners, Inc.

Name: BRUSCH and MARSHALL Co. ENGINEERS

SUPV. WASHINGTON CIV ENGR
Signature 97 DATE 8-31-94
ELE Signature DATE
MECH Signature CIV Signature
FPE CIV

APPROVED DATE
DESIGN ENGINEER DATE
AS FOR CONTRACT ADMIN. 9/12/94

STATE OF ILLINOIS REGISTERED PROFESSIONAL ENGINEER RONALD E. WASHINGTON 81-3542 ILLINOIS

Ronald E. Washington
REG. P.E.
8-31-94
(1-30-94)

ARCH. & ENGR. SEAL

DEPARTMENT OF THE NAVY — NAVAL FACILITIES ENGINEERING COMMAND
SOUTHERN DIVISION
CHARLESTON, S.C.

NAVAL TRAINING CENTER — GREAT LAKES, ILLINOIS

DAMAGE CONTROL SCHOOL
COMPOSITE SLAB AND BEAMS

SIZE	CODE IDENT NO.	NAVFAC DRAWING NO.	DRAWING NO.
F	80091	5276445	S3-7
		CONTR CONTR NO. N62467-93-C-1143	
SCALE N. T. S.		SPEC 06-93-1143	SHEET 12 OF

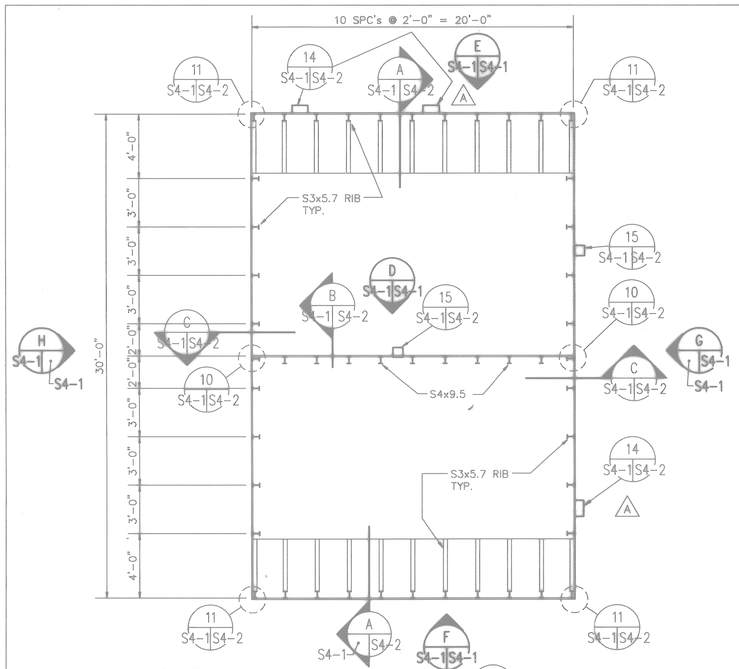

LOWER DECK FRAMING PLAN
SCALE: 1/4" = 1'-0"

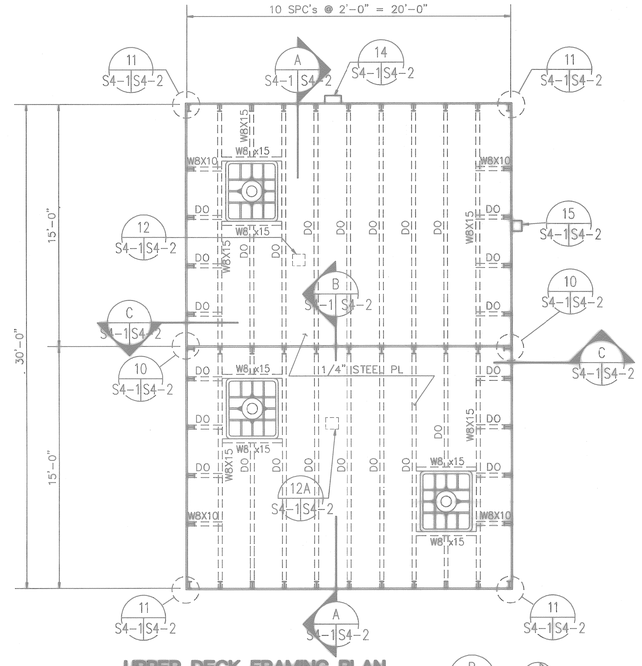

UPPER DECK FRAMING PLAN
SCALE: 1/4" = 1'-0"

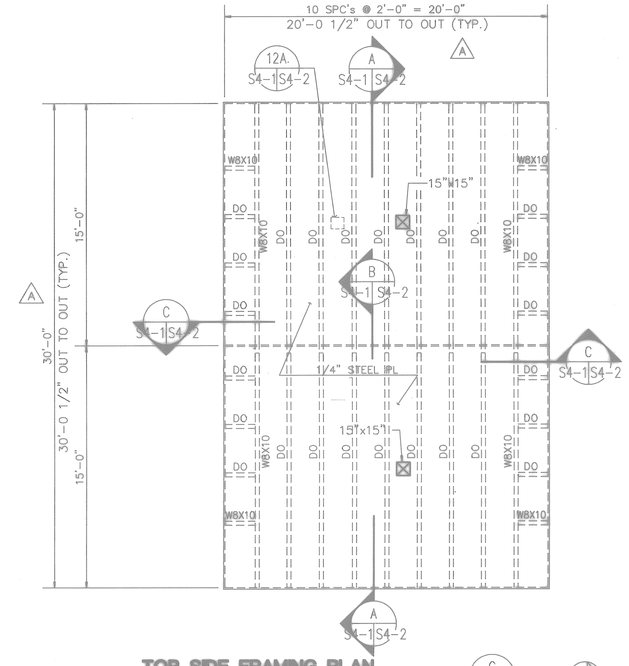

TOP SIDE FRAMING PLAN
SCALE: 1/4" = 1'-0"

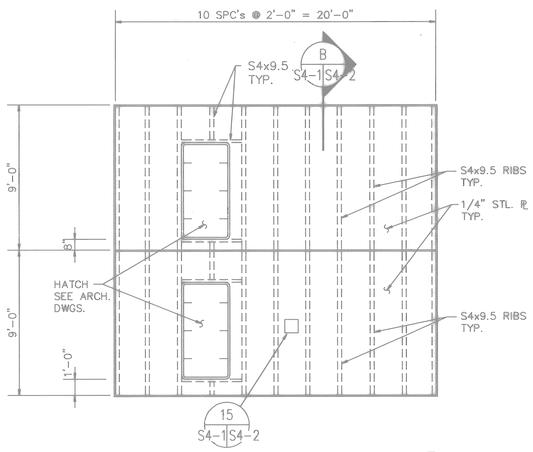

INTERIOR BULKHEAD ELEVATION
SCALE: 1/4" = 1'-0"

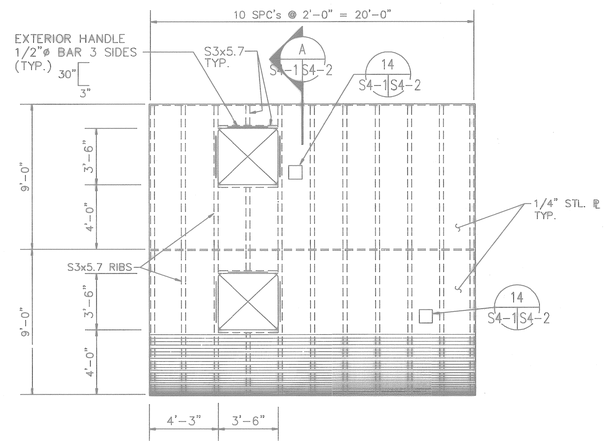

WEST ELEVATION
SCALE: 1/4" = 1'-0"

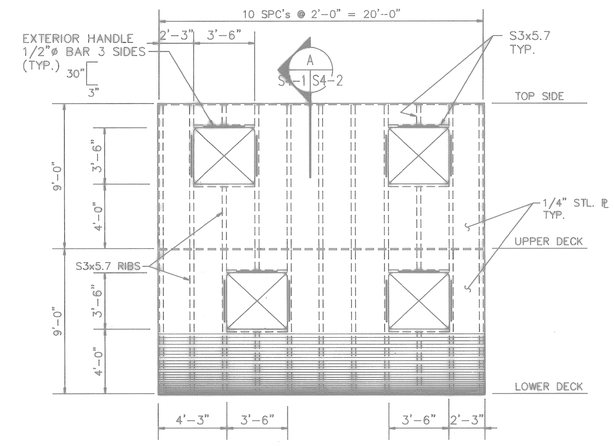

EAST ELEVATION
SCALE: 1/4" = 1'-0"

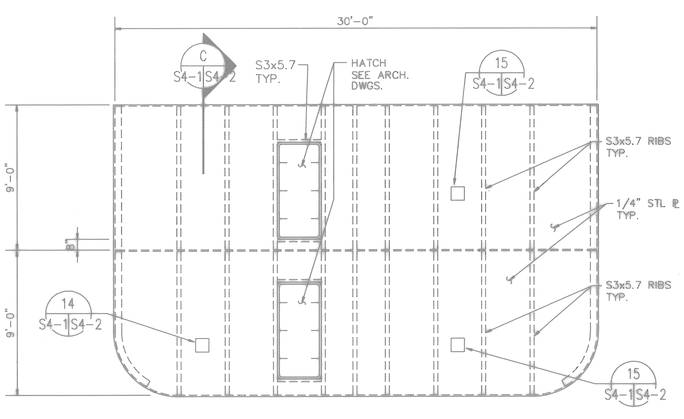

NORTH ELEVATION
SCALE: 1/4" = 1'-0"

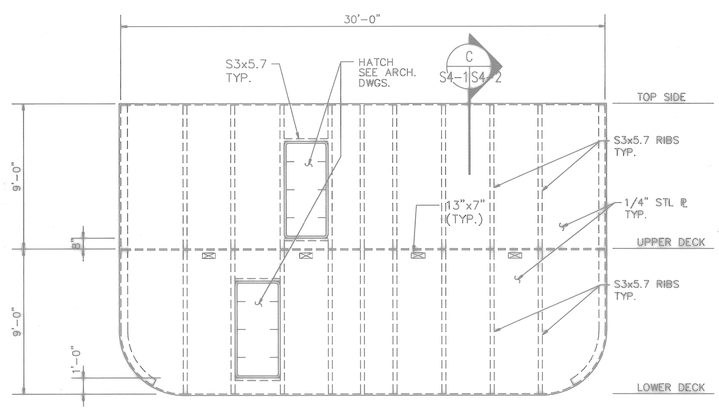

SOUTH ELEVATION
SCALE: 1/4" = 1'-0"

FOR OFFICIAL USE ONLY

RECORD DRAWING
DATE 06/08/98

DATE 07-31-97 ISSUE CORRECTED TO AS-BUILT BY JTL INITIAL D.A.M.	
Knight Architects Engineers Planners, Inc. 549 West Randolph Street Chicago, IL 60661 Established in 1949 A Lester B. Knight & Associates, Inc. Company © Copyright 1997 Knight Architects Engineers Planners, Inc.	DEPARTMENT OF THE NAVY — NAVAL FACILITIES ENGINEERING COMMAND — SOUTHERN DIVISION — CHARLESTON, S.C.
DSGN BUSCH DR MARSZALEK CHK SWANSON	NAVAL TRAINING CENTER — GREAT LAKES, ILLINOIS
SUPV WALKINGTON CH ENGR	DAMAGE CONTROL SCHOOL
SUBMITTED BY — DATE	DAMAGE CONTROL TRAINER
FIRM MEMBER TITLE	PLANS AND ELEVATIONS
EIC — BR HD	
FPE — DIR	
APPROVED — DATE — OFFICER IN CHARGE	SIZE F — CODE IDENT NO. 80091 — NAVFAC DRAWING NO. 5276546 — DRAWING NO. S4-1
APPROVED — DATE — EFD FOR COMMANDER, NAVFAC	CONSTR CONTR NO. N62467-93-C-1143
ARCH. & ENGR. SEAL	SCALE 1/4"=1'-0" — SPEC 06-93-1143 — SHEET 12 OF

Date&time: 10/30/97 15:15:01 User: TWhite Filename: P:\PAPER\CHANGED\JTL\JSPS4-01

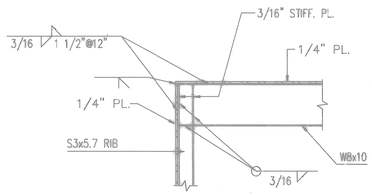

DETAIL 1 S4-2|S4-2
SCALE: 1"=1'-0"

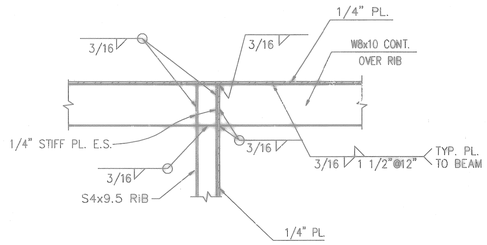

DETAIL 2 S4-2|S4-2
SCALE: 1"=1'-0"

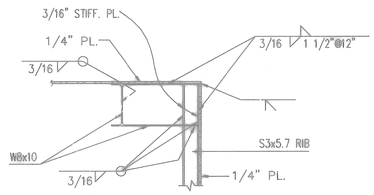

DETAIL 3 S4-2|S4-2
SCALE: 1"=1'-0"

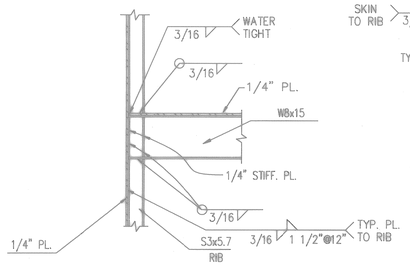

DETAIL 4 S4-2|S4-2
SCALE: 1"=1'-0"

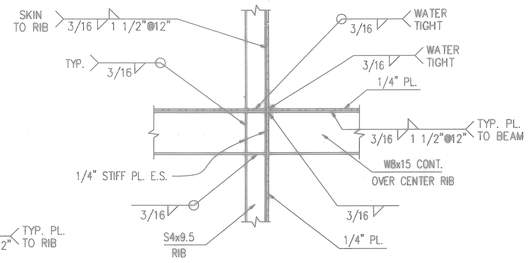

DETAIL 5 S4-2|S4-2
SCALE: 1"=1'-0"

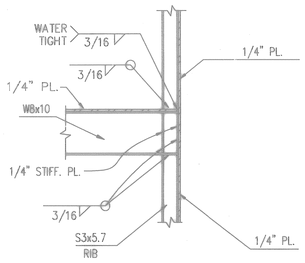

DETAIL 6 S4-2|S4-2
SCALE: 1"=1'-0"

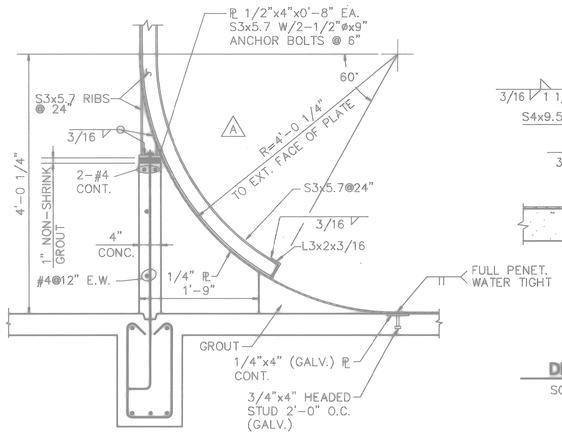

DETAIL 7 S4-2|S4-2
SCALE: 1"=1'-0"

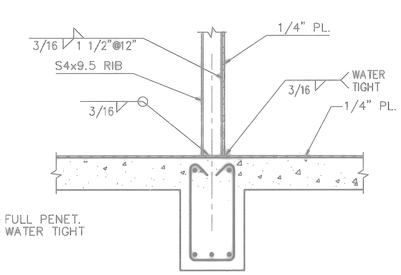

DETAIL 8 S4-2|S4-2
SCALE: 1"=1'-0"

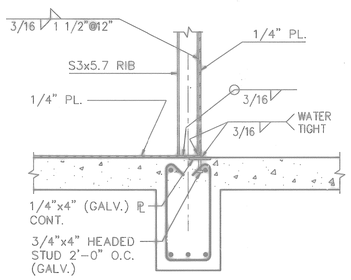

DETAIL 9 S4-2|S4-2
SCALE: 1"=1'-0"

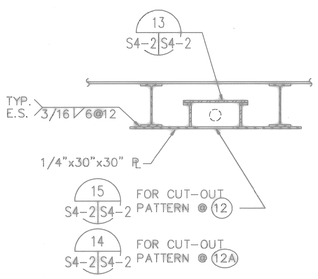

DETAIL 12,12A S4-1|S4-2
N.T.S.

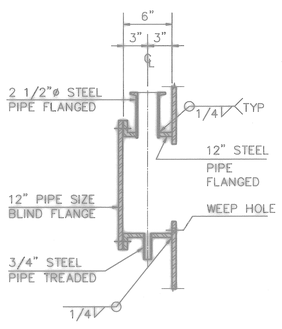

SECTION BOX 13 S4-2|S4-2
SCALE: 1 1/2"=1'-0"

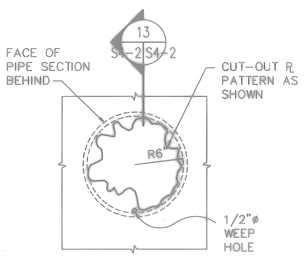

K-TYPE PENETRATION AND BOX PATCH 14 S4-1|S4-2
SCALE: 1 1/2"=1'-0"

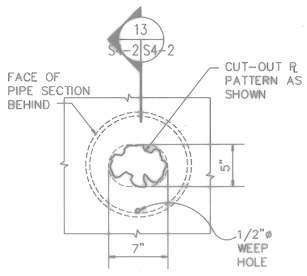

BUCKET PATCH 15 S4-1|S4-2
SCALE: 1 1/2"=1'-0"

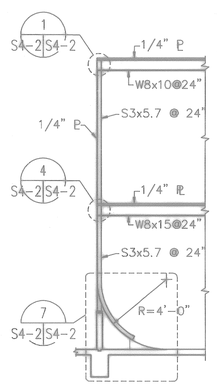

HULL A S4-1|S4-2
SCALE: 1/4"=1'-0"

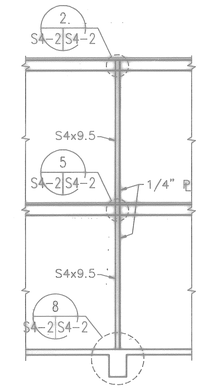

BULKHEAD INTERIOR B S4-1|S4-2
SCALE: 1/4"=1'-0"

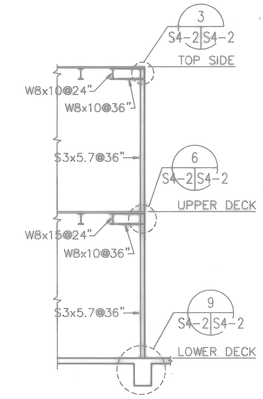

BULKHEAD SIDES C S4-1|S4-2
SCALE: 1/4"=1'-0"

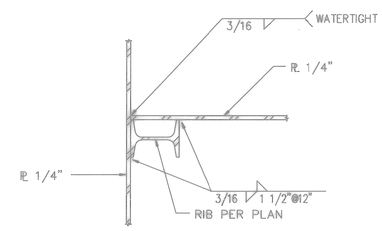

DETAIL 10 S4-1|S4-2
SCALE: 3"=1'-0"

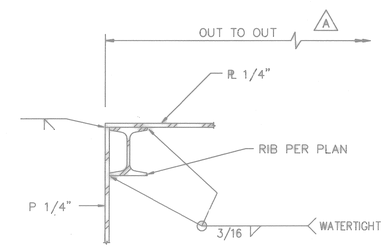

DETAIL 11 S4-1|S4-2
SCALE: 3"=1'-0"

JOINTS IN PLATE PERPENDICULAR TO BEAMS OR RIB SHALL BE FULL PENETRATION WELDED. TYPICAL FOR PLANS AND ELEVATIONS SHOWN ON S4-1.

FOR OFFICIAL USE ONLY

RECORD DRAWING
DATE 06/08/98
PAW 06/08/98

A DATE 07-31-97 ISSUE CORRECTED TO AS-BUILT BY JTL INITIAL N.A.W.

Knight Architects Engineers Planners, Inc.
549 West Randolph Street
Chicago, IL 60661
Established in 1949
A Merger of Knight & associates, Inc. Company
©Copyright 1996 Knight Architects Engineers Planners, Inc.

DEPARTMENT OF THE NAVY — NAVAL FACILITIES ENGINEERING COMMAND
SOUTHERN DIVISION
CHARLESTON, S.C.

DSGN BUSCH DR MARSZALEK CHK SWANSON
SUP WALKINGTON CH ENGR
SUBMITTED BY DATE
FIRM MEMBER TITLE
EIC BR HD
FPE DIR
APPROVED DATE
OFFICER IN CHARGE
APPROVED DATE
EFD FOR COMMANDER, NAVFAC

NAVAL TRAINING CENTER — GREAT LAKES, ILLINOIS

DAMAGE CONTROL SCHOOL
DAMAGE CONTROL TRAINER
STEEL DETAILS

SIZE	CODE IDENT NO.	NAVFAC DRAWING NO.	DRAWING NO.
F	80091	5276547	S4-2
		CONSTR CONTR NO. N62467-93-C-1143	
SCALE AS NOTED		SPEC 06-93-1143	SHEET 123 OF

ARCH. & ENGR. SEAL

Date&time: 10/30/97 15:17:03 User: TWhite Filename: P:\PAPER\CHANGED\JTL\JSPS4-02

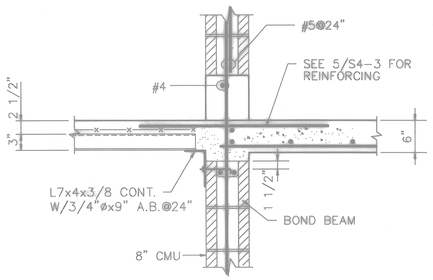

COMPOSITE SLAB TO CMU WALL (1)
SCALE: 1"=1'-0" S1-7|S4-3

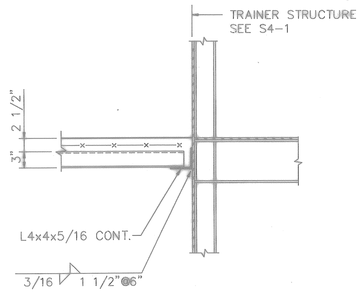

COMPOSITE SLAB TO TRAINER (2)
SCALE: 1"=1'-0" S1-7|S4-3

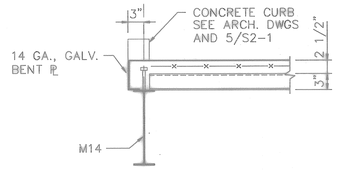

COMPOSITE SLAB SLAB EDGE (3)
SCALE: 1"=1'-0" S1-7|S4-3

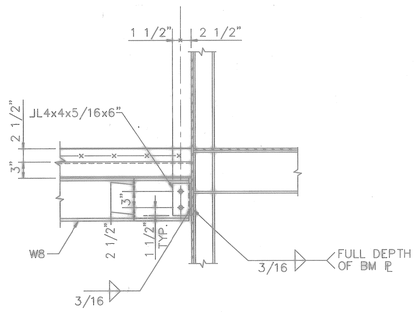

BEAM TO TRAINER CONNECTION (4)
SCALE: 1"=1'-0" S1-7|S4-3

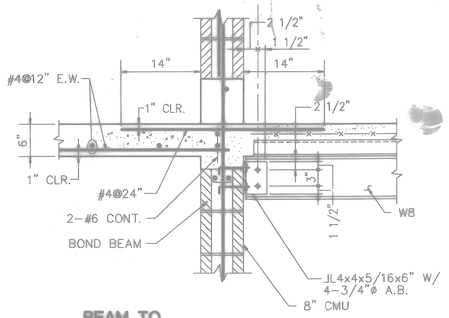

BEAM TO CMU WALL CONNECTION (5)
SCALE: 1"=1'-0" S1-7|S4-3

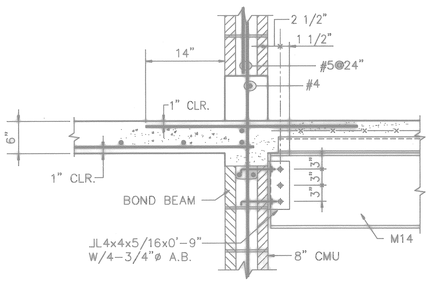

BEAM TO CMU WALL CONNECTION (6)
SCALE: 1"=1'-0" S1-7|S4-3

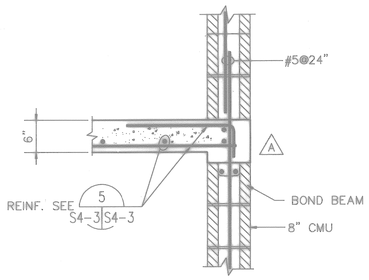

CONCRETE SLAB TO CMU WALL (7)
SCALE: 1"=1'-0" S1-7|S4-3

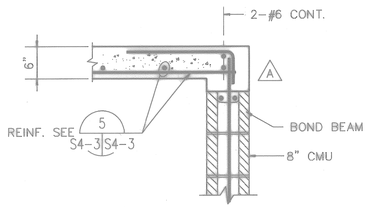

CONCRETE SLAB TO T/CMU WALL (8)
SCALE: 1"=1'-0" S1-7|S4-3

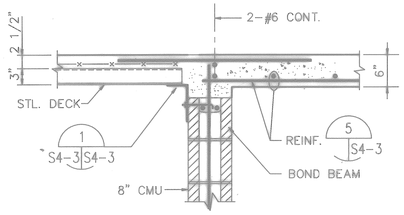

COMPOSITE SLAB TO T/CMU WALL (9)
SCALE: 1"=1'-0" S1-7|S4-3

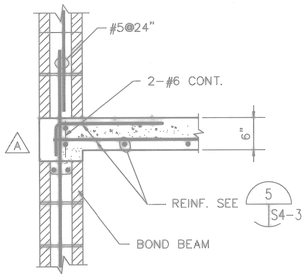

CONCRETE SLAB TO CMU WALL (10)
SCALE: 1"=1'-0" S1-7|S4-3

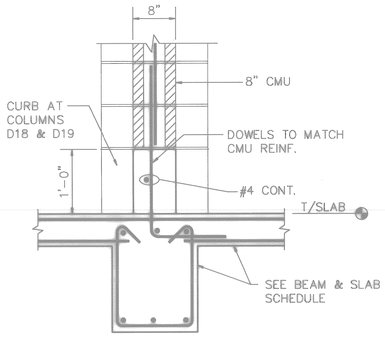

TYPICAL CURB AT TRAINER (11)
SCALE: 1"=1'-0" S1-6|S4-3

NOTE: SEE A9-6 FOR ADDITIONAL INFORMATION ON TRAINER AND CURB DETAILS AT DOORS.

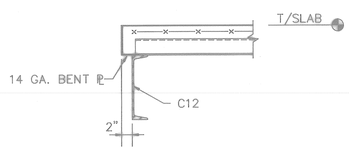

COMPOSITE SLAB EDGE AT CHANNEL (12)
SCALE: 1"=1'-0" S1-7|S4-3

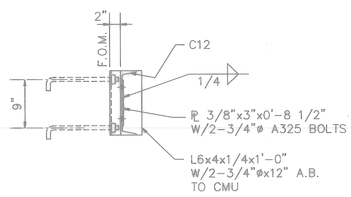

CHANNEL TO CMU CONNECTION (13)
SCALE: 1"=1'-0" S1-7|S4-3

NOTES: (A)

1. PROVIDE BOND BEAMS BELOW CONCRETE SLABS AND ALSO AT MIDHEIGHT OF WALLS (EL.104'-0" AND EL. 113'-0"). REINFORCE BOND BEAMS WITH 2#4 CONT.
2. VERTICAL REINFORCING IN CMU WALLS IS #5@48".
3. REFER TO A8-3 FOR MASONRY NOTES AND TYPICAL DETAILS.

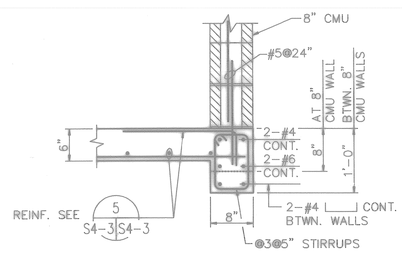

SECTION (14) (A)
SCALE: 1"=1'-0" S1-7|S4-3

FOR OFFICIAL USE ONLY

RECORD DRAWING
DATE 06/08/98
DOD 05/05/98

(A) DATE 07-31-97 ISSUE CORRECTED TO AS-BUILT BY JTL INITIAL

Knight Architects Engineers Planners, Inc.
549 West Randolph Street
Chicago, IL 60661
Established in 1949
A Lester B. Knight & Associates, Inc. Company
©Copyright 1997 Knight Architects Engineers Planners, Inc.

DEPARTMENT OF THE NAVY — NAVAL FACILITIES ENGINEERING COMMAND
SOUTHERN DIVISION
CHARLESTON, S.C.

NAVAL TRAINING CENTER — GREAT LAKES, ILLINOIS

DSGN BUSCH DR MARSZALEK CHK SWANSON
SUPV WALKINGTON CH ENGR
SUBMITTED BY — DATE
FIRM MEMBER TITLE
E/C — BR HD
FPE — DIR
APPROVED — DATE
OFFICER IN CHARGE
APPROVED — DATE
EFD FOR COMMANDER, NAVFAC

ARCH. & ENGR. SEAL

DAMAGE CONTROL SCHOOL
DAMAGE CONTROL TRAINER
FLOOR FRAMING DETAILS

SIZE	CODE IDENT NO.	NAVFAC DRAWING NO.	DRAWING NO.
F	80091	5276548	S4-3
		CONSTR CONTR NO. N62467-93-C-1143	
SCALE AS NOTED		SPEC 06-93-1143	SHEET 14 OF

Filename: P:\PAPER\CHANGED\JTL\JSPS4-03
User: TWhite
Date&time: 10/30/97 15:19:02