VICINITY MAP

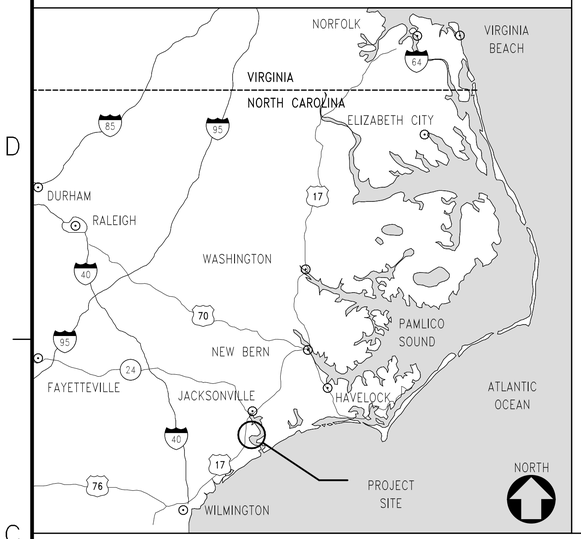

P-1475 CULTURAL ASSIMILATION FACILITY

MARINE CORPS BASE CAMP LEJEUNE
JACKSONVILLE, NORTH CAROLINA

NAVAL FACILITIES ENGINEERING COMMAND ~ MID ATLANTIC

REVISED FINAL SUBMITTAL
02-03-2016

LOCATION MAP

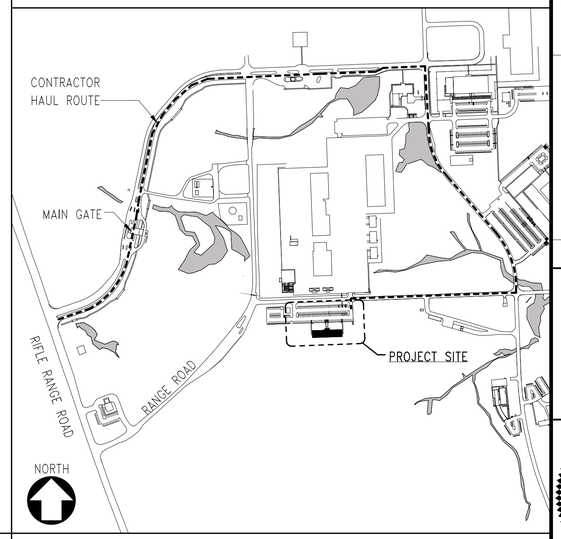

DRAWING INDEX

SHEET NO.	DRAWING TITLE	NAVFAC NO.
GENERAL		
G-001	TITLE SHEET	12711873
BORING LOGS		
B-001	LEGEND, NOTES & TEST RESULTS	12711874
B-101	SOIL BORING LOGS	12711875
B-102	SOIL BORING LOGS	12711876
CIVIL		
CD101	EXISTING CONDITIONS AND DEMOLITION	12711877
CS101	SITE LAYOUT PLAN	12711878
CG101	SITE GRADING & EROSION CONTROL PLAN	12711879
CG102	OVERALL SITE PLAN AND BMP #14 MODIFICATIONS	12711880
CU101	SITE UTILITY PLAN	12711881
CU301	WATER MAIN PROFILE	12711882
CU302	OFF-SITE SEWER - PLAN AND PROFILE	12711883
CS501	SITE DETAILS	12711884
CG501	GRADING DETAILS	12711885
CU501	UTILITY DETAILS	12711886
LS101	SITE LANDSCAPING PLAN	12711887
LS701	BUILDING RR12 LANDSCAPING - BID OPTION	12711888
CS701	JOGGING TRAIL - BID OPTION	12711889
STRUCTURAL		
S-001	GENERAL NOTES	12711890
S-002	GENERAL NOTES	12711891
S-003	TYPICAL DETAILS	12711892
S-101	FOUNDATION PLAN	12711893
S-102	ROOF FRAMING PLAN	12711894
S-501	SECTIONS & DETAILS	12711895
S-502	SECTIONS & DETAILS	12711896

SHEET NO.	DRAWING TITLE	NAVFAC NO.
ARCHITECTURAL		
A-001	PARTITION TYPES, LEGENDS, ABBREVIATIONS AND NOTES	12711897
A-101	FLOOR PLAN	12711898
A-102	REFLECTED CEILING PLAN	12711899
A-103	ROOF PLAN	12711900
A-104	FINISH PLAN	12711901
A-105	FURNITURE PLAN	12711902
A-201	BUILDING ELEVATIONS	12711903
A-301	BUILDING & WALL SECTIONS	12711904
A-302	WALL SECTIONS & DETAILS	12711905
A-401	ENLARGED FLOOR PLANS & INTERIOR ELEVATIONS	12711906
A-501	DETAILS	12711907
A-502	DETAILS	12711908
A-503	DETAILS	12711909
A-601	DOOR SCHEDULE AND DETAILS	12711910
A-602	FINISH / COLOR SCHEDULES AND DETAILS	12711911
A-701	BUILDING RR12 FLOOR PLAN - BID OPTION	12711912
LIFE SAFETY		
LS001	LIFE SAFETY AND BUILDING CODE ANALYSIS	12711913
LS101	LIFE SAFETY LAYOUT	12711914
FIRE PROTECTION		
F-001	FIRE PROTECTION LEGEND AND NOTES	12711915
F-101	FIRE PROTECTION LAYOUT	12711916
F-501	FIRE PROTECTION DETAILS	12711917
F-502	FIRE PROTECTION DETAILS	12711918
PLUMBING		
P-001	PLUMBING LEGEND, NOTES AND ABBREVIATIONS	12711919
P-101	PLUMBING FLOOR PLAN	12711920
P-401	ENLARGED PLUMBING PLANS	12711921
P-501	PLUMBING DETAILS	12711922
P-601	PLUMBING SCHEDULES	12711923
P-701	PLUMBING RISER DIAGRAMS	12711924

SHEET NO.	DRAWING TITLE	NAVFAC NO.
MECHANICAL		
M-001	MECHANICAL LEGEND, NOTES AND ABBREVIATIONS	12711925
M-101	DUCTWORK FLOOR PLAN	12711926
M-102	PIPING FLOOR PLAN	12711927
M-401	ENLARGED PLANS AND SECTIONS	12711928
M-501	MECHANICAL DETAILS	12711929
M-502	MECHANICAL DETAILS	12711930
M-503	MECHANICAL DETAILS	12711931
M-601	MECHANICAL SCHEDULES	12711932
M-602	MECHANICAL SCHEDULES	12711933
M-801	MECHANICAL CONTROLS	12711934
M-802	MECHANICAL CONTROLS	12711935
M-803	MECHANICAL CONTROLS	12711936
M-804	MECHANICAL CONTROLS	12711937
M-805	MECHANICAL CONTROLS	12711938
ELECTRICAL		
E-001	ELECTRICAL LEGEND, NOTES AND ABBREVIATIONS	12711939
ES101	ELECTRICAL SITE PLAN	12711940
E-101	LIGHTING FLOOR PLAN	12711941
E-102	POWER FLOOR PLAN	12711942
E-103	SPECIAL SYSTEMS FLOOR PLAN	12711943
E-401	ELECTRICAL ENLARGED PLANS	12711944
E-501	ELECTRICAL DETAILS	12711945
E-502	ELECTRICAL DETAILS	12711946
E-503	ELECTRICAL DETAILS	12711947
E-504	ELECTRICAL DETAILS	12711948
E-601	PANELBOARD SCHEDULES	12711949
E-602	PANELBOARD SCHEDULES	12711950
E-701	PARTIAL TELECOMMUNICATIONS SITE PLAN - BID OPTION	12711951
E-702	PARTIAL TELECOMMUNICATIONS SITE PLAN - BID OPTION	12711952
E-703	LIGHTNING PROTECTION PLAN - BID OPTION	12711953

NAVFAC MIDLANT IPT APPROVAL

ARCHITECT

CIVIL ENGINEER

STRUCTURAL ENGINEER

FIRE PROTECTION ENGINEER

PLUMBING ENGINEER

MECHANICAL ENGINEER

ELECTRICAL ENGINEER

GEOTECHNICAL ENGINEER

INTERIOR DESIGNER

MIN	DESCRIPTION	DATE	APPR

NAVFAC

COMMONWEALTH OF VIRGINIA
JOSEPH D. BOVEE
LIC. NO. 008802
2/03/16
ARCHITECT
SEAL

HBA
A/E INFO

APPROVED
FOR COMMANDER NAVFAC
ACTIVITY
SATISFACTORY TO DATE

DES	JDB	DRW	DAS	CHK	WMS

PM
BRANCH MANAGER
CHIEF ENG/ARCH
FIRE PROTECTION

DEPARTMENT OF THE NAVY
NAVAL FACILITIES ENGINEERING COMMAND
NAVAL FACILITIES ENGINEERING COMMAND
NAVAL STATION - NORFOLK, VIRGINIA
NORTH CAROLINA IPT
MCB CAMP LEJEUNE
JACKSONVILLE, NC
P-1475 CULTURAL ASSIMILATION FACILITY
TITLE SHEET

SCALE: GRAPHIC
EPROJECT NO.: 1386337
CONSTR. CONTR. NO. N40085-10-D-5301
NAVFAC DRAWING NO. 12711873
SHEET 1 OF 81
G-001

DRAWFORM REVISION: 10 MAY 2014

D C B A

BORING LOG LEGEND

KEY TO DRILLING SYMBOLS

Split Spoon Sample (ASTM D 1586)		Water Table at Time of Drilling		H.S.A.	Hollow Stem Auger Drilling
Undisturbed Sample (ASTM D 1587)		Water Table after 24 hrs.		M.R.	Mud Rotary Wash Drilling
Rock Coring (ASTM D 2113)		Boring Cave In		PP	Pocket Penetrometer (tsf)
Roller Cone Advanced		Loss of Drilling Fluid		REC	Core Recovery (%)
Seepage into Borehole		Auger Refusal		RQD	Rock Quality Designator (%)
		Roller Cone Refusal		SCR	Solid Core Recovery (%)

Approximate Strata Change Depth Different Soil Types

Approximate Strata Change Depth Similar Soil Types

CORRELATION OF RELATIVE DENSITY AND CONSISTENCY WITH STANDARD PENETRATION TEST RESISTANCE (ASTM D 1586)[§]

SPT RESISTANCE (N) IN BLOWS PER FOOT

SPT N	RELATIVE DENSITY[†] SAND & GRAVEL	SPT N	CONSISTENCY[†] SILT & CLAY
0 - 4	Very Loose	0 - 2	Very Soft
5 - 10	Loose	3 - 4	Soft
11 - 30	Firm	5 - 8	Firm
31 - 50	Dense	9 - 15	Stiff
51 +	Very Dense	16 - 30	Very Stiff
		31 - 50	Hard
		51 +	Very Hard

ROCK QUALITY[‡]

FRACTURES, JOINT SPACING AND BEDDING

RQD (%)	DIAGNOSTIC DESCRIPTION	ROCK PARAMETER FIELD/LAB RATIO	SPACING	JOINTS	BEDDING
0 - 25	Very Poor	0.15	Less than 2"	Very Close	Very Thin
25 - 50	Poor	0.20	2" to 1'	Close	Thin
50 - 75	Fair	0.25	1' to 3'	Moderately Close	Medium
75 - 90	Good	0.30 to 0.70	3' to 10'	Wide	Thick
90 - 100	Excellent	0.70 to 1.00	More than 10'	Very Wide	Very Thick

HARDNESS

Very Hard - Breaking specimens requires several hard hammer blows

Hard - Hard hammer blow required to detach specimens

Moderately Hard - Light hammer blow required to detach specimens

Medium - May be scratched 1/16" deep by a knife or nail, breaks into several pieces by light hammer blow

Soft - Can be gouged readily by knife or nail, corners and edges broken by finger pressure

Very Soft - May be carved with a knife and readily broken by finger pressure

WEATHERING

Fresh - Fresh rock, bright crystals, no staining

Slight - Minimum stainaing and discoloration, open joints contain clay

Moderate - Significant portions of rock shows staining and discoloration, strong rock fragments

Severe - All rock shows staining, rock fabric evident but reduced strength

Very Severe - All rock shows staining, rock mass effectively reduced to soil with strong rock fragments remaining

Complete - Rock reduced to soil with rock fabric not discernable

[§] *Resistance of a standard 2-inch O.D., 1.375-inch I.D. split spoon sampler driven by a 140 pound hammer free-falling 30 inches.*

[†] *after Terzaghi and Peck, 1968*

[‡] *after D. U. Deere, 1963, 1967*

GER

MAJOR DIVISIONS			SYMBOLS GRAPH	SYMBOLS LETTER	TYPICAL DESCRIPTIONS
COARSE GRAINED SOILS	GRAVEL AND GRAVELLY SOILS	CLEAN GRAVELS (LITTLE OR NO FINES)		GW	WELL-GRADED GRAVELS, GRAVEL - SAND MIXTURES, LITTLE OR NO FINES
	MORE THAN 50% OF COARSE FRACTION RETAINED ON NO. 4 SIEVE			GP	POORLY-GRADED GRAVELS, GRAVEL - SAND MIXTURES, LITTLE OR NO FINES
		GRAVELS WITH FINES (APPRECIABLE AMOUNT OF FINES)		GM	SILTY GRAVELS, GRAVEL - SAND - SILT MIXTURES
				GC	CLAYEY GRAVELS, GRAVEL - SAND - CLAY MIXTURES
MORE THAN 50% OF MATERIAL IS LARGER THAN NO. 200 SIEVE SIZE	SAND AND SANDY SOILS	CLEAN SANDS (LITTLE OR NO FINES)		SW	WELL-GRADED SANDS, GRAVELLY SANDS, LITTLE OR NO FINES
				SP	POORLY-GRADED SANDS, GRAVELLY SAND, LITTLE OR NO FINES
	MORE THAN 50% OF COARSE FRACTION PASSING ON NO. 4 SIEVE	SANDS WITH FINES (APPRECIABLE AMOUNT OF FINES)		SM	SILTY SANDS, SAND - SILT MIXTURES
				SC	CLAYEY SANDS, SAND - CLAY MIXTURES
FINE GRAINED SOILS	SILTS AND CLAYS	LOW PLASTICITY LIQUID LIMIT LESS THAN 50		ML	INORGANIC SILTS, CLAYEY SILTS, SILT-VERY FINE SAND MIXTURES, ROCK FLOUR
				CL	INORGANIC CLAYS OF LOW TO MEDIUM PLASTICITY, GRAVELLY, SANDY, SILTY, & LEAN CLAYS
				OL	ORGANIC SILTS AND ORGANIC CLAYS OF LOW PLASTICITY
MORE THAN 50% OF MATERIAL IS SMALLER THAN NO. 200 SIEVE SIZE		HIGH PLASTICITY LIQUID LIMIT GREATER THAN 50		MH	INORGANIC SILTS AND MICACEOUS, DIATOMACEOUS AND ELASTIC SILTY SOILS
				CH	INORGANIC CLAYS OF HIGH PLASTICITY, FAT CLAYS
				OH	ORGANIC CLAYS OF MEDIUM TO HIGH PLASTICITY, ORGANIC SILTS
OTHER SOILS	HIGHLY ORGANIC SOILS			PT	PEAT, HUMUS, MUCK, SWAMP SOILS WITH VERY HIGH ORGANIC CONTENTS
	UNCONTROLLED FILLS				DISTURBED SOILS WITH POSSIBLE DEBRIS AND RUBBLE, OLD CONSTRUCTION WASTES, NON-ENGINEERED BACKFILLS
	DECOMPOSED OR PARTIALLY WEATHERED ROCK				TRANSITIONAL MATERIAL BETWEEN SOIL AND ROCK WHICH MAY RETAIN THE RELICT STRUCTURE OF THE PARENT ROCK

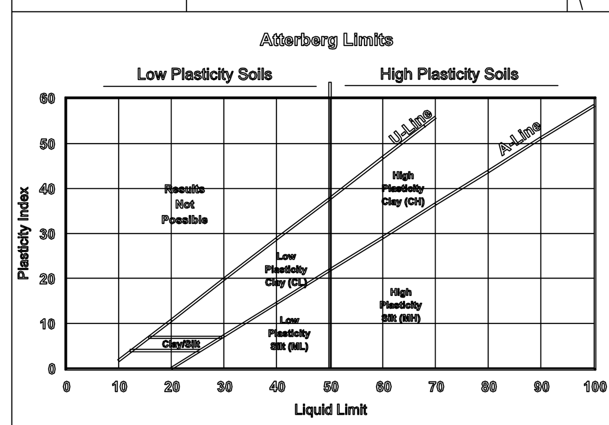

PARTICLE SIZE IDENTIFICATION

BOULDERS:		Greater than 300 mm (12 in.)
COBBLES:		75 mm to 300 mm (3 - 12 in.)
GRAVEL:	Coarse -	19.0 mm to 75 mm (0.75 - 3 in.)
	Fine -	4.75 mm to 19.0 mm (#4 - 0.75 in.)
SANDS:	Coarse -	2.00 mm to 4.75 mm
	Medium -	0.425 mm to 2.00 mm
	Fine -	0.075 mm to 0.425 mm
SILTS & CLAYS:		Less than 0.075 mm

PLASTICITY INDEX (PI) & SHRINK-SWELL POTENTIAL

0 - 4	None
4 - 15	Slight or Low
15 - 30	Medium to High
31+	High to Very High

ADDITIONAL RELATIVE DESCRIPTIVE VALUES

Trace < 10% — Some < 35% but > 20%

Little < 20% but > 10% — And > 35%

BORING LOG GENERAL NOTES

1. THE SOIL BORING RECORDS REPRESENT THE GEOTECHNICAL ENGINEER'S INTERPRETATION OF THE SUBSURFACE CONDITIONS ENCOUNTERED AT THE SPECIFIC BORING LOCATIONS AT THE TIME OF THE FIELD EXPLORATION BASED ON VISUAL EXAMINATION OF THE FIELD SAMPLES OBTAINED AND LABORATORY CLASSIFICATION TESTING ON SELECTED SAMPLES.

2. LINES DESIGNATING THE INTERFACE BETWEEN VARIOUS STRATA ON THE BORING RECORDS REPRESENT THE APPROXIMATE INTERFACE LOCATION. THE ACTUAL TRANSITION BETWEEN STRATA MAY BE MORE GRADUAL THAN INDICATED. THE BORING RECORDS MAY NOT NECESSARILY BE REPRESENTATIVE OF THE MATERIAL CHARACTER AND STRATA THICKNESS OVER THE ENTIRE CONSTRUCTION AREA.

3. WATER LEVELS SHOWN ON THE BORING RECORDS REPRESENT THE CONDITIONS ENCOUNTERED AT THE TIME OF THE FIELD EXPLORATION AND DO NOT NECESSARILY REPRESENT GROUNDWATER LEVELS THAT WILL BE ENCOUNTERED DURING CONSTRUCTION. IT IS POSSIBLE THAT GROUNDWATER LEVELS WILL FLUCTUATE DUE TO SEASONAL VARIATIONS AND OTHER FACTORS.

4. BORING ELEVATIONS WERE ESTIMATED USING SPOT ELEVATIONS AND CONTOUR LINES SHOWN ON THE SITE PLANS AND WERE NOT PHYSICALLY SURVEYED. BORING ELEVATIONS SHALL BE CONSIDERED APPROXIMATE.

5. APPROXIMATE BORING LOCATIONS ARE SHOWN ON THESE DRAWINGS AND IN THE GEOTECHNICAL REPORT. BORING LOCATIONS (WGS84 LAT/LON) WERE ESTABLISHED USING A HANDHELD GPS RECEIVER HAVING AN ACCURACY OF 10 FEET. BORING LOCATIONS WERE NOT PHYSICALLY SURVEYED.

6. BORINGS WERE ADVANCED USING MUD ROTARY AND HOLLOW STEM AUGERING METHODS AS NOTED.

7. REFER TO THE BORING LOG LEGEND FOR AN EXPLANATION OF THE SYMBOLS USED.

LABORATORY TESTING GENERAL NOTES

1. THE LABORATORY TEST RESULTS REPRESENT THE SUBSURFACE SOIL PROPERTIES ENCOUNTERED AT THE SPECIFIC BORING LOCATIONS AND DEPTHS. IT IS POSSIBLE THAT SOIL PROPERTIES AND CONDITIONS BETWEEN THE INDIVIDUAL BORING LOCATIONS AND DEPTHS WILL BE DIFFERENT FROM THOSE INDICATED.

2. GEOTECHNICAL LABORATORY TESTS WERE PERFORMED IN GENERAL ACCORDANCE WITH THE FOLLOWING ASTM STANDARDS: D422, D698, D1140, D1883, D2216, D2487, D4318. ANALYTICAL TESTS WERE PERFORMED IN ACCORDANCE WITH APPLICABLE EPA SW–846 STANDARDS.

3. LABORATORY MOISTURE AND INDEX TESTS WERE PERFORMED ON SMALL DISTURBED GRAB SAMPLES OBTAINED FROM THE SOIL BORINGS. LABORATORY TRIAXIAL AND CONSOLIDATION TESTS WERE PERFORMED ON RELATIVELY UNDISTURBED SHELBY TUBE SAMPLES.

SITE & FOUNDATION PREPARATION GENERAL NOTES

1. THE CONTRACTOR SHALL ANTICIPATE DIFFICULTIES IN CLEARING, GRUBBING AND SUBGRADE PREPARATION ACTIVITIES DUE TO THE POTENTIAL PERCHED WATER TABLE AND WOODED SITE CONDITIONS AND SHALL EMPLOY MEASURES TO PROPERLY MANAGE SURFACE AND SUBSURFACE WATER AND TO MINIMIZE DETERIORATION OF THE SUBGRADE. EXCAVATIONS TO REMOVE STUMPS AND ROOT MAT SHALL BE BACKFILLED WITH PROPERLY COMPACTED STRUCTURAL FILL MATERIAL. COSTS FOR SUCH MEASURES, MATERIAL AND EQUIPMENT SHALL BE INCLUDED IN THE LUMP SUM PRICE.

2. AFTER STRIPPING AND PREPARING THE SUBGRADE, ALL GRADING FILL WITHIN AND AROUND THE BUILDING FOOTPRINT SHALL BE BROUGHT UP TO FINAL SUBGRADE ELEVATION. FOOTING AND SLAB CONSTRUCTION SHALL BE DELAYED FOR A MINIMUM OF 30 DAYS AFTER REACHING FINAL SUBGRADE ELEVATIONS. THE CONTRACTOR SHALL SCHEDULE AND SEQUENCE ITS WORK ACCORDINGLY.

LABORATORY TEST RESULTS

SAMPLE NUMBER	DEPTH (FEET)	SAMPLE TYPE	CLASS.	MOISTURE CONTENT (%)	% FINES	LL	PL	PI	RESISTIVITY (Ohm-cm)	pH	OTHER TESTS
B-1	5	SS	SP-SM	10.8	5.5	-	-	-	-	-	SIEVE
B-1	11	SS	SM	27.1	18.9	-	-	-	-	-	-
B-2	1	SS	SP-SM	7.7	6.4	-	-	-	-	-	SIEVE
B-2	2 to 8	Comp	SM	20.1	-	-	-	-	38,340	3.51	-
B-3	0 to 6	Comp	SP-SM	12.3	-	-	-	-	33,340	3.57	-
B-3	19	SS	SC	35.5	46.8	-	-	-	-	-	-
B-4	1	SS	SP-SM	9.7	6.1	-	-	-	-	-	SIEVE
B-4	24	SS	CL	36.6	-	38	22	16	-	-	-
B-5	3	SS	SP-SM	6.8	7.4	-	-	-	-	-	SIEVE
B-5	9	SS	SM	22.8	22.5	-	-	-	-	-	-
B-5	14	SS	SC	40.1	40.3	-	-	-	-	-	-
B-5	24	SS	SM	31.8	22.8	-	-	-	-	-	-
B-5	31	UD	CL	38.6	-	39	22	17	-	-	CONSOLIDATION
B-5	41	UD	CL	36.2	-	42	22	20	-	-	UU TRIAXIAL
B-5	49	SS	CL	34.9	-	45	23	22	-	-	-
B-5	59	SS	SM	31.0	13.2	-	-	-	-	-	-
B-5	69	SS	SM	58.4	17.0	-	-	-	-	-	-

Detection Summary

Client: GeoEnvironmental Resources Inc GER — TestAmerica Job ID: 400-113179-1

Project/Site: P-1475 MARSOC MCBCL

Client Sample ID: B-2 @ 1'-3' — **Lab Sample ID: 400-113179-1**

Analyte	Result	Qualifier	RL	MDL	Unit	Dil Fac	D	Method	Prep Type
Barium	0.076	J	5.0	0.050	mg/L	1		6010C	TCLP
Chromium	0.018	J	0.050	0.010	mg/L	1		6010C	TCLP

Client Sample ID: B-3 @ 1'-3' — **Lab Sample ID: 400-113179-2**

Analyte	Result	Qualifier	RL	MDL	Unit	Dil Fac	D	Method	Prep Type
Xylenes, Total	0.0023	J	0.0054	0.0011	mg/Kg	1	☼	8260B	Total/NA
Diesel Range Organics [C10-C28]	20		11	4.4	mg/Kg	1	☼	8015C	Total/NA
Barium	0.30	J	5.0	0.050	mg/L	1		6010C	TCLP
Chromium	0.013	J	0.050	0.010	mg/L	1		6010C	TCLP

SYM	DESCRIPTION	DATE	APPR

NAVFAC

NORTH CAROLINA PROFESSIONAL SEAL 028246 ENGINEER CHARLES F P CRAWLEY, III

SEAL

HBA

A/E INFO

APPROVED

FOR COMMANDER NAVFAC

ACTIVITY

SATISFACTORY TO DATE

DES	GER	DRW	CAD	CHK	CFC
PM				XXX	
BRANCH MANAGER				XXX	
CHIEF ENG/ARCH				XXX	
FIRE PROTECTION				XXX	

DEPARTMENT OF THE NAVY — NAVAL FACILITIES ENGINEERING COMMAND

NAVAL FACILITIES ENGINEERING COMMAND

NORTH CAROLINA IPT — NAVAL STATION – NORFOLK, VIRGINIA

MCB CAMP LEJEUNE — JACKSONVILLE, NC

P-1475 CULTURAL ASSIMILATION FACILITY

LEGEND, NOTES & TEST RESULTS

SCALE:	GRAPHIC
EPROJECT NO.:	1386337
CONSTR. CONTR. NO.	N40085-10-D-5301
NAVFAC DRAWING NO.	12711874
SHEET	2 OF 81

B-001

GER GeoEnvironmental Resources, Inc. Consulting Engineers

Environmental • Groundwater • Hazardous Materials • Geotechnical • Industrial Hygiene

2712 Southern Boulevard, Suite 101, Virginia Beach, VA 23452 USA

Tel. 757-463-3200 Fax 757-463-3080 www.geronline.com

DRAWFORM REVISION: 10 MAY 2014

GeoEnvironmental Resources, Inc. — Boring B-1 (Page 1 of 1)

Environmental, Groundwater, Hazardous Materials, Geotechnical & Industrial Engineering Consultants

Project: P-1475 Cultural Assimilation Facility	GER Project Number: 110-6832	Date Drilled: 10/29/2015
Location: MARSOC, MCB Camp Lejeune, NC	Driller: Fishburne Drilling	Drill Method: 3" Mud Rotary
Depth (ft.): 25.0 / Elevation (ft.): 55.0	Client: HBA Architects	Hammer Type: Automatic

Material Description	Ground Water	Comments	SPT	Uncorrected Penetration Resistance (blows/foot)
Topsoil and root mat			0, 1, 0, 2	1
Poorly Graded SAND (SP) Very loose, light gray and brown, fine, trace roots and organic material			1, 2, 2, 2	4
Silty SAND (SM) Very loose, tan and light gray, fine, trace clay			2, 2, 2, 2	4
Poorly Graded SAND with Silt (SP-SM) Very loose to loose, tan to brown, fine, trace roots	▽ ▼		2, 3, 4, 5	7
Poorly Graded SAND (SP) Firm, tan and brown, fine to medium, some roots, trace clay			5, 7, 5, 4	12
Silty SAND (SM) Loose to very loose, gray, fine to medium, with thin lenses of silty clay			2, 2, 3, 2 / 1, 1, 1, 1	5 / 2
Sandy, Low Plasticity CLAY (CL) Very soft, gray				
Silty SAND (SM) Very loose, gray, fine to medium, trace clay			1, 1, 3, 2	4
Poorly Graded SAND (SP) Firm, light gray, fine			13, 10, 11, 6	21
Boring terminated at 25 feet.				

GeoEnvironmental Resources, Inc. — Boring B-2 (Page 1 of 1)

Project: P-1475 Cultural Assimilation Facility	GER Project Number: 110-6832	Date Drilled: 10/29/2015
Location: MARSOC, MCB Camp Lejeune, NC	Driller: Fishburne Drilling	Drill Method: 3" Mud Rotary
Depth (ft.): 25.0 / Elevation (ft.): 51.0	Client: HBA Architects	Hammer Type: Automatic

Material Description	Ground Water	Comments	SPT	Uncorrected Penetration Resistance (blows/foot)
Topsoil like material				
Poorly Graded SAND with Silt (SP-SM) Very loose, light gray and brown, fine, trace organic material (PROBABLE FILL)			1, 1, 1, 2	2
Poorly Graded SAND with Silt (SP-SM) Loose, tan to brown, fine, trace clay, trace roots	▽ ▼		2, 2, 3, 3 / 3, 4, 3, 2	5 / 7
Clayey Silty SAND (SC-SM) Loose to very loose, mottled orange with tan and light gray, fine to medium			2, 1, 3, 4	4
Silty SAND (SM) Very loose, tan and orange, fine, with thin clay lenses			1, 2, 1, 4	3
Poorly Graded SAND (SP) Very loose, orange and tan, fine, with thin clay lenses			2, 1, 2, 1	3
Silty SAND (SM) Loose, gray, fine, with thin lenses of silty clay			1, 3, 2, 2	5
Poorly Graded SAND (SP) Firm, gray, fine			6, 11, 10, 6	21
Silty SAND (SM) Very loose, gray, fine to medium, with thin lenses of silty clay			1, 0, 1, 0	1
Silty, Low Plasticity CLAY (CL) Very soft, gray, trace sand				
Boring terminated at 25 feet.				

GeoEnvironmental Resources, Inc. — Boring B-3 (Page 1 of 1)

Project: P-1475 Cultural Assimilation Facility	GER Project Number: 110-6832	Date Drilled: 10/29/2015
Location: MARSOC, MCB Camp Lejeune, NC	Driller: Fishburne Drilling	Drill Method: 3" Mud Rotary
Depth (ft.): 25.0 / Elevation (ft.): 52.5	Client: HBA Architects	Hammer Type: Automatic

Material Description	Ground Water	Comments	SPT	Uncorrected Penetration Resistance (blows/foot)
Topsoil and root mat			0, 1, 0, 1	1
Poorly Graded SAND (SP) Very loose, light gray, fine				
Poorly Graded SAND with Silt (SP-SM) Very loose to loose, tan to brown, fine, trace clay, trace roots	▽ ▼		2, 2, 2, 3 / 2, 3, 3, 3 / 3, 3, 2, 2	4 / 6 / 5
Clayey SAND (SC) Loose, brown and light tan, fine to medium, with thin clay lenses			1, 2, 2, 2	4
Silty SAND (SM) Very loose, tan to gray, fine to medium, with thin lenses of silty clay			1, 1, 1, 1	2
Poorly Graded SAND (SP) Loose, light gray, fine to medium			5, 3, 2, 2	5
Silty, Low Plasticity CLAY (CL) Soft, gray, trace sand				
Clayey SAND (SC) Very loose, gray, fine to medium, with thin lenses of silty clay			1, 0, 2, 1 / 1, 1, 3, 2	2 / 4
Boring terminated at 25 feet.				

GeoEnvironmental Resources, Inc. — Boring B-4 (Page 1 of 1)

Project: P-1475 Cultural Assimilation Facility	GER Project Number: 110-6832	Date Drilled: 10/29/2015
Location: MARSOC, MCB Camp Lejeune, NC	Driller: Fishburne Drilling	Drill Method: 3" Mud Rotary
Depth (ft.): 25.0 / Elevation (ft.): 49.0	Client: HBA Architects	Hammer Type: Automatic

Material Description	Ground Water	Comments	SPT	Uncorrected Penetration Resistance (blows/foot)
Topsoil and root mat			1, 1, 1, 1	2
Poorly Graded SAND with Silt (SP-SM) Very loose, light gray and brown, fine to medium, trace roots			1, 2, 2, 1	4
Clayey SAND (SC) Very loose, brown and gray, fine	▼ ▽	perched water table		
Poorly Graded SAND with Silt (SP-SM) Loose, dark brown, fine, some roots			3, 3, 6, 5	9
Silty SAND (SM) Loose, tan and brown, fine, trace clay, some roots			4, 3, 3, 2	6
Poorly Graded SAND with Silt (SP-SM) Loose, tan to white, fine, trace clay			3, 2, 3, 2	5
Silty SAND (SM) Loose, tan to gray, fine, with thin lenses of silty clay			2, 3, 2, 4	5
Clayey SAND (SC) Very loose, gray, fine, with thin lenses of silty clay			1, 1, 1, 1	2
Silty, Low Plasticity CLAY (CL) Very soft, gray, with thin lenses of silty sand			1, 1, 1, 1 / 1, 0, 1, 0	2 / 1
Boring terminated at 25 feet.				

GeoEnvironmental Resources, Inc. — Boring B-5 (Page 1 of 3)

Project: P-1475 Cultural Assimilation Facility	GER Project Number: 110-6832	Date Drilled: 10/28/2015
Location: MARSOC, MCB Camp Lejeune, NC	Driller: Fishburne Drilling	Drill Method: 4" Mud Rotary
Depth (ft.): 100.0 / Elevation (ft.): 53.5	Client: HBA Architects	Hammer Type: Automatic

Material Description	Ground Water	Comments	SPT	Uncorrected Penetration Resistance (blows/foot)
Topsoil and root mat			1, 1, 1, 2	2
Poorly Graded SAND (SP) Very loose, white and gray, fine				
Poorly Graded SAND with Silt (SP-SM) Very loose to loose, tan and light brown, fine, trace clay, trace roots	▼		2, 2, 2, 2 / 2, 3, 3, 3	4 / 6
Silty SAND (SM) Firm, brown, fine, trace roots			3, 5, 7, 5	12
Silty SAND (SM) Loose, tan and light gray, fine to medium, with thin lenses of clay			3, 3, 3, 3	6
Clayey SAND (SC) Very loose, gray, fine to medium, with thin silty clay lenses			3, 1, 1, 1 / 2, 1, 2, 1	2 / 3
Sandy, Low Plasticity CLAY (CL) Very soft, gray			1, 0, 5, 6	5
Poorly Graded SAND (SP) Loose, brownish-gray, fine to medium				
Silty SAND (SM) Very loose, gray, fine, with thin lenses of silty clay			1, 2, 1, 2	3
Silty, Low Plasticity CLAY (CL) Very soft, gray, little to trace sand		PP=0.5	0, 1, 0, 0 / 0, 1, 0, 1	1 / 1

GeoEnvironmental Resources, Inc. — Boring B-5 (Page 2 of 3)

Project: P-1475 Cultural Assimilation Facility	GER Project Number: 110-6832	Date Drilled: 10/28/2015
Location: MARSOC, MCB Camp Lejeune, NC	Driller: Fishburne Drilling	Drill Method: 4" Mud Rotary
Depth (ft.): 100.0 / Elevation (ft.): 53.5	Client: HBA Architects	Hammer Type: Automatic

Material Description	Ground Water	Comments	SPT	Uncorrected Penetration Resistance (blows/foot)
Silty, Low Plasticity CLAY (CL) Very soft, gray, little to trace sand (continued)		PP=0.75	0, 1, 0, 1 / 0, 1, 1, 2 / 0, 1, 1, 2	1 / 2 / 2
Silty SAND and SHELL (SM) Dense, dark greenish-gray, fine to coarse, contains fine to coarse gravel			10, 16, 18, 40	34
Silty SAND (SM) Loose, greenish-gray, fine, trace shell fragments			4, 4, 6, 8 / 3, 4, 6, 8	10 / 10
Silty SAND (SM) Dense, tan and gray, fine to medium, trace shell fragments			10, 15, 16, 18	31

GER GeoEnvironmental Resources, Inc. Consulting Engineers
Environmental • Groundwater • Hazardous Materials • Geotechnical • Industrial Hygiene
2712 Southern Boulevard, Suite 101, Virginia Beach, VA 23452 USA
Tel. 757-463-3200 Fax 757-463-3080 www.geronline.com

SYM	DESCRIPTION	DATE	APPR

NAVFAC

SEAL: NORTH CAROLINA PROFESSIONAL ENGINEER SEAL 028246 CHARLES F. P. CRAWLEY, III

HBA — A/E INFO

APPROVED

FOR COMMANDER NAVFAC

ACTIVITY

SATISFACTORY TO DATE

DES	GER	DRW	CAD	CHK	CFC
PM				XXX	
BRANCH MANAGER				XXX	
CHIEF ENG/ARCH				XXX	
FIRE PROTECTION				XXX	

DEPARTMENT OF THE NAVY
NAVAL FACILITIES ENGINEERING COMMAND
NAVAL STATION – NORFOLK, VIRGINIA
NORTH CAROLINA IPT
MCB CAMP LEJEUNE JACKSONVILLE, NC
P-1475 CULTURAL ASSIMILATION FACILITY
SOIL BORING LOGS

SCALE:	GRAPHIC
EPROJECT NO.:	1386337
CONSTR. CONTR. NO.	N40085-10-D-5301
NAVFAC DRAWING NO.	12711875
SHEET	3 OF 81

B-101

DRAWFORM REVISION: 10 MAY 2014

GeoEnvironmental Resources, Inc.	Environmental, Groundwater, Hazardous Materials, Geotechnical & Industrial Engineering Consultants	Boring #: B-5 (Page 3 of 3)
Project: P-1475 Cultural Assimilation Facility	GER Project Number: 110-6832	Date Drilled: 10/28/2015
Location: MARSOC, MCB Camp Lejeune, NC	Driller: Fishburne Drilling	Drill Method: 4" Mud Rotary
Depth (ft.): 100.0	Elevation (ft.): 53.5 / Client: HBA Architects	Hammer Type: Automatic

Elevation ft	Elevation m	Depth ft	Depth m	Lithology	Material Description	Ground Water	Comments	SPT
					Silty SAND (SM) Dense, tan and gray, fine to medium, trace shell fragments (continued)			
					Silty SAND and SHELL (SM) Firm to very dense, gray and white, fine to coarse, partly cemented			
					Poorly Graded SAND with Silt (SP-SM) Very dense, gray, fine, trace shell fragments			
					Boring terminated at 100 feet.			

Uncorrected Penetration Resistance (blows/foot) 0 25 50

GeoEnvironmental Resources, Inc.	Environmental, Groundwater, Hazardous Materials, Geotechnical & Industrial Engineering Consultants	Boring #: BMP-1 (Page 1 of 1)
Project: P-1475 Cultural Assimilation Facility	GER Project Number: 110-6832	Date Drilled: 10/28/2015
Location: MARSOC, MCB Camp Lejeune, NC	Driller: Fishburne Drilling	Drill Method: 2-1/4" HSA
Depth (ft.): 10.0	Elevation (ft.): 50.0 / Client: HBA Architects	Hammer Type: Automatic

Elevation ft	Elevation m	Depth ft	Depth m	Lithology	Material Description	Ground Water	Comments	SPT
					Topsoil and root mat			
					Poorly Graded SAND (SP) Very loose, light gray and brown, fine, trace roots			
					Poorly Graded SAND with Silt (SP-SM) Loose, tan, fine, trace clay			
					Silty, High Plasticity CLAY (CH) Firm, mottled orange with light gray			
					Silty SAND (SM) Loose to very loose, tan and light gray, fine to medium, with thin clay lenses			
					Boring terminated at 10 feet.			

Uncorrected Penetration Resistance (blows/foot) 0 25 50

GeoEnvironmental Resources, Inc.	Environmental, Groundwater, Hazardous Materials, Geotechnical & Industrial Engineering Consultants	Boring #: BMP-2 (Page 1 of 1)
Project: P-1475 Cultural Assimilation Facility	GER Project Number: 110-6832	Date Drilled: 10/28/2015
Location: MARSOC, MCB Camp Lejeune, NC	Driller: Fishburne Drilling	Drill Method: 2-1/4" HSA
Depth (ft.): 10.0	Elevation (ft.): 50.5 / Client: HBA Architects	Hammer Type: Automatic

Elevation ft	Elevation m	Depth ft	Depth m	Lithology	Material Description	Ground Water	Comments	SPT
					Topsoil and root mat			
					Poorly Graded SAND (SP) Very loose, light gray to brown, fine, trace roots			
					Silty SAND (SM) Loose, tan, fine to medium			
					Clayey SAND (SC) Loose, mottled orange with light gray, fine to medium		perched water table	
					Silty SAND (SM) Loose, tan, fine to medium, with thin clay lenses			
					Poorly Graded SAND (SP) Loose, light gray with white and tan, fine to medium, with thin clay lenses			
					Boring terminated at 10 feet.			

Uncorrected Penetration Resistance (blows/foot) 0 25 50

GeoEnvironmental Resources, Inc.	Environmental, Groundwater, Hazardous Materials, Geotechnical & Industrial Engineering Consultants	Boring #: BMP-3 (Page 1 of 1)
Project: P-1475 Cultural Assimilation Facility	GER Project Number: 110-6832	Date Drilled: 10/28/2015
Location: MARSOC, MCB Camp Lejeune, NC	Driller: Fishburne Drilling	Drill Method: 2-1/4" HSA
Depth (ft.): 10.0	Elevation (ft.): 48.0 / Client: HBA Architects	Hammer Type: Automatic

Elevation ft	Elevation m	Depth ft	Depth m	Lithology	Material Description	Ground Water	Comments	SPT
					Topsoil and root mat			
					Poorly Graded SAND with Silt (SP-SM) Very loose, gray to dark brown and tan, fine, trace roots			
					Clayey SAND (SC) Loose to firm, tan and light gray, fine to medium			
					Silty SAND (SM) Firm to loose, tan and light gray, fine to medium, with thin clay lenses			
					Poorly Graded SAND (SP) Loose, white, fine, trace clay			
					Boring terminated at 10 feet.			

Uncorrected Penetration Resistance (blows/foot) 0 25 50

BORING LOCATION PLAN (NOT FOR CONSTRUCTION)

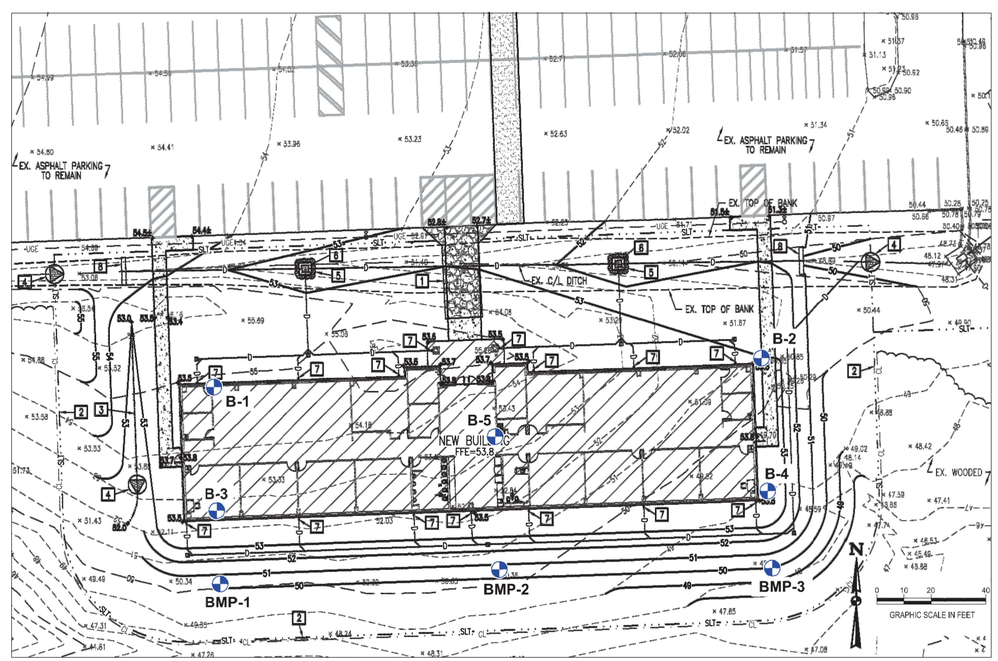

APPR	DATE	DESCRIPTION	STM

NAVFAC

NORTH CAROLINA PROFESSIONAL SEAL 028246 ENGINEER CHARLES E P CRAWLEY III

SEAL

HBA

A/E INFO

APPROVED

FOR COMMANDER NAVFAC

ACTIVITY

SATISFACTORY TO DATE

DES	GER	DRW	CAD	CHK	CFC
PM				XXX	
BRANCH MANAGER				XXX	
CHIEF ENG/ARCH				XXX	
FIRE PROTECTION				XXX	

DEPARTMENT OF THE NAVY
NAVAL FACILITIES ENGINEERING COMMAND
NAVAL STATION – NORFOLK, VIRGINIA
NORTH CAROLINA BRT
MCB CAMP LEJEUNE
JACKSONVILLE, NC

P-1475 CULTURAL ASSIMILATION FACILITY

SOIL BORING LOGS

SCALE: GRAPHIC
EPROJECT NO.: 1386337
CONSTR. CONTR. NO.: N40085-10-D-5301
NAVFAC DRAWING NO.: 12711876
SHEET 4 OF 81

B-102

GER GeoEnvironmental Resources, Inc.
5412 Southern Breeze Drive, Suite 100, Virginia Beach, VA 23462 USA
Tel. 757-463-5200 - Fax 757-463-5201 www.gerinfo.com

DRAWFORM REVISION: 10 MAY 2014

CIVIL LEGEND

EXISTING	DESCRIPTION	NEW
	WATER VALVE	
	SANITARY SEWER MANHOLE	
	STORM DRAIN MANHOLE	
CO	CLEANOUT	
	STORM DRAIN DROP INLET	
	FIRE HYDRANT	
TPED	COMMUNICATIONS PEDESTAL	
	UTILITY POLE/POLE WITH LIGHT	
	GUY WIRE	
	DITCH/SWALE CENTERLINE	
S	SANITARY SEWER (GRAVITY)	S
FM	SANITARY SEWER (FORCE MAIN)	
D	STORM SEWER	D
W	DOMESTIC WATER	W
G	UNDERGROUND (LP) GAS	G
OHE	OVERHEAD ELECTRICAL	
UGE	UNDERGROUND ELECTRICAL	UGE
UGC	UNDERGROUND COMMUNICATIONS	
X	FENCE	
	CONCRETE	
	ASPHALT	
	GRAVEL	
	SURVEY CONTROL POINT	
× 5.00	SPOT ELEVATIONS	+ XX.XX
25	CONTOUR LINES	28
	TREE LINE / CLEARING LIMIT	CL
	SOURCE/DESTINATION UNKNOWN	
	SIGN	
	DROP INLET PROTECTION	
	CHECK DAM	

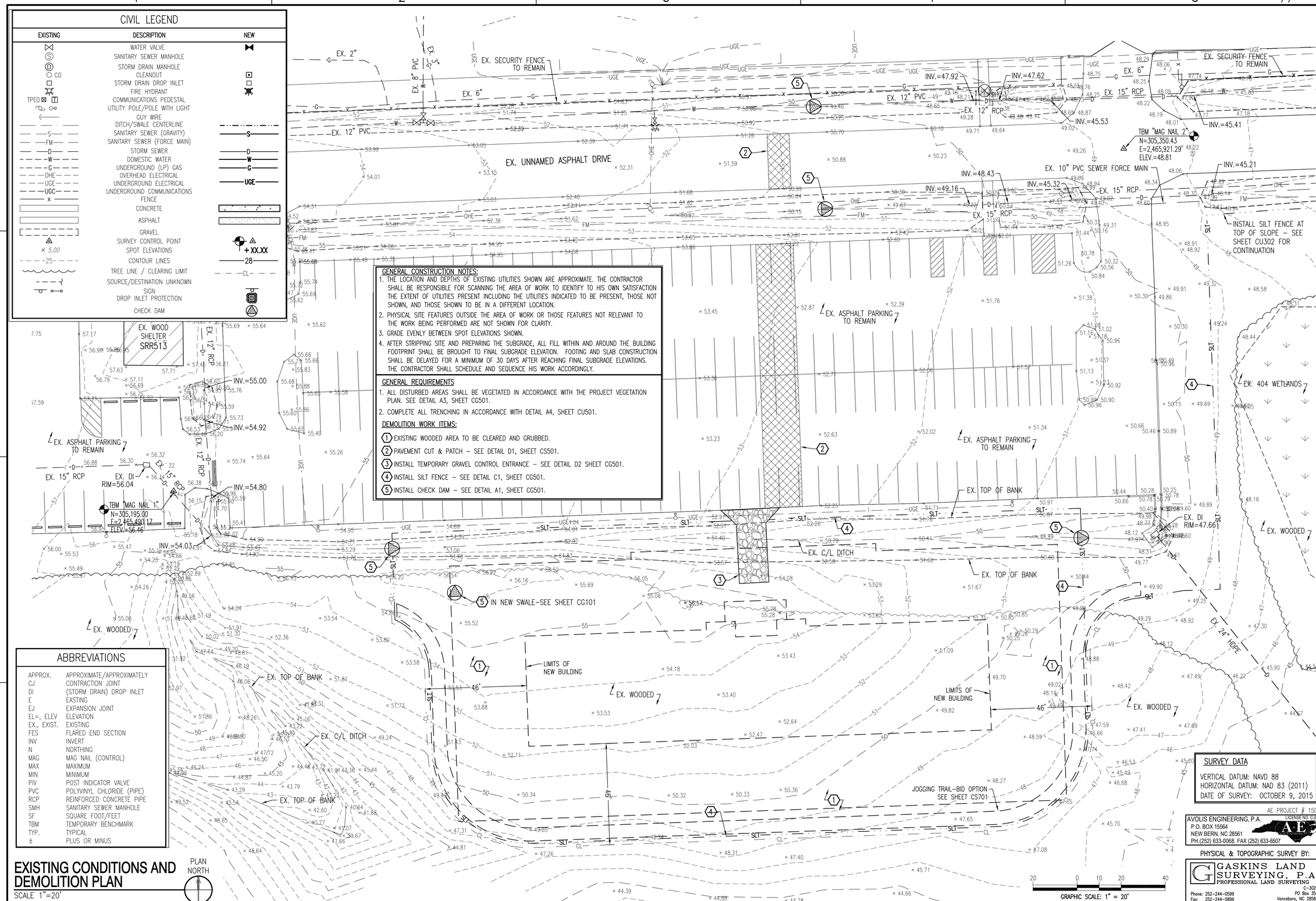

GENERAL CONSTRUCTION NOTES:

1. THE LOCATION AND DEPTHS OF EXISTING UTILITIES SHOWN ARE APPROXIMATE. THE CONTRACTOR SHALL BE RESPONSIBLE FOR SCANNING THE AREA OF WORK TO IDENTIFY TO HIS OWN SATISFACTION THE EXTENT OF UTILITIES PRESENT INCLUDING THE UTILITIES INDICATED TO BE PRESENT, THOSE NOT SHOWN, AND THOSE SHOWN TO BE IN A DIFFERENT LOCATION.
2. PHYSICAL SITE FEATURES OUTSIDE THE AREA OF WORK OR THOSE FEATURES NOT RELEVANT TO THE WORK BEING PERFORMED ARE NOT SHOWN FOR CLARITY.
3. GRADE EVENLY BETWEEN SPOT ELEVATIONS SHOWN.
4. AFTER STRIPPING SITE AND PREPARING THE SUBGRADE, ALL FILL WITHIN AND AROUND THE BUILDING FOOTPRINT SHALL BE BROUGHT TO FINAL SUBGRADE ELEVATION. FOOTING AND SLAB CONSTRUCTION SHALL BE DELAYED FOR A MINIMUM OF 30 DAYS AFTER REACHING FINAL SUBGRADE ELEVATIONS. THE CONTRACTOR SHALL SCHEDULE AND SEQUENCE HIS WORK ACCORDINGLY.

GENERAL REQUIREMENTS

1. ALL DISTURBED AREAS SHALL BE VEGETATED IN ACCORDANCE WITH THE PROJECT VEGETATION PLAN. SEE DETAIL A3, SHEET CG501.
2. COMPLETE ALL TRENCHING IN ACCORDANCE WITH DETAIL A4, SHEET CU501.

DEMOLITION WORK ITEMS:

1. EXISTING WOODED AREA TO BE CLEARED AND GRUBBED.
2. PAVEMENT CUT & PATCH – SEE DETAIL D1, SHEET CS501.
3. INSTALL TEMPORARY GRAVEL CONTROL ENTRANCE – SEE DETAIL D2 SHEET CG501.
4. INSTALL SILT FENCE – SEE DETAIL C1, SHEET CG501.
5. INSTALL CHECK DAM – SEE DETAIL A1, SHEET CG501.

ABBREVIATIONS

APPROX.	APPROXIMATE/APPROXIMATELY
CJ	CONTRACTION JOINT
DI	(STORM DRAIN) DROP INLET
E	EASTING
EJ	EXPANSION JOINT
EL=, ELEV	ELEVATION
EX., EXIST.	EXISTING
FES	FLARED END SECTION
INV	INVERT
N	NORTHING
MAG	MAG NAIL (CONTROL)
MAX	MAXIMUM
MIN	MINIMUM
PIV	POST INDICATOR VALVE
PVC	POLYVINYL CHLORIDE (PIPE)
RCP	REINFORCED CONCRETE PIPE
SMH	SANITARY SEWER MANHOLE
SF	SQUARE FOOT/FEET
TBM	TEMPORARY BENCHMARK
TYP.	TYPICAL
±	PLUS OR MINUS

EXISTING CONDITIONS AND DEMOLITION PLAN

SCALE 1"=20'

PLAN NORTH

SURVEY DATA

VERTICAL DATUM: NAVD 88
HORIZONTAL DATUM: NAD 83 (2011)
DATE OF SURVEY: OCTOBER 9, 2015

AE PROJECT # 15098

AVOLIS ENGINEERING, P.A.
LICENSE NO. C-0700
P.O. BOX 15564
NEW BERN, NC 28561
PH.(252) 633-0068, FAX (252) 633-6507

PHYSICAL & TOPOGRAPHIC SURVEY BY:

GASKINS LAND SURVEYING, P.A.
PROFESSIONAL LAND SURVEYING
C-3023
Phone: 252-244-0599
Fax: 252-244-5899
PO Box 354
Vanceboro, NC 28586

DATE	REVISION DESCRIPTION	ADPR

NAVFAC

NORTH CAROLINA PROFESSIONAL SEAL 15733 2/13/14 ENGINEER JOHN K. AVOLIS

HBA

A/E INFO

APPROVED

FOR COMMANDER NAVFAC

ACTIVITY

SATISFACTORY TO DATE

DES	JKA	DRW	WWF	CHK	JKA

PM

BRANCH MANAGER

CHIEF ENG/ARCH

FIRE PROTECTION

DEPARTMENT OF THE NAVY
NAVAL FACILITIES ENGINEERING COMMAND
NAVAL FACILITIES ENGINEERING COMMAND
NAVAL STATION – NORFOLK, VIRGINIA
NORTH CAROLINA IPT
MCB CAMP LEJEUNE
JACKSONVILLE, NC
P-1475 CULTURAL ASSIMILATION FACILITY
EXISTING CONDITIONS AND DEMOLITION PLAN

SCALE:	GRAPHIC
EPROJECT NO.:	1386337
CONSTR. CONTR. NO.	N40085-10-D-5301
NAVFAC DRAWING NO.	12711877
SHEET	5 OF 81

CD101

DRAWFORM REVISION: 10 MAY 2014

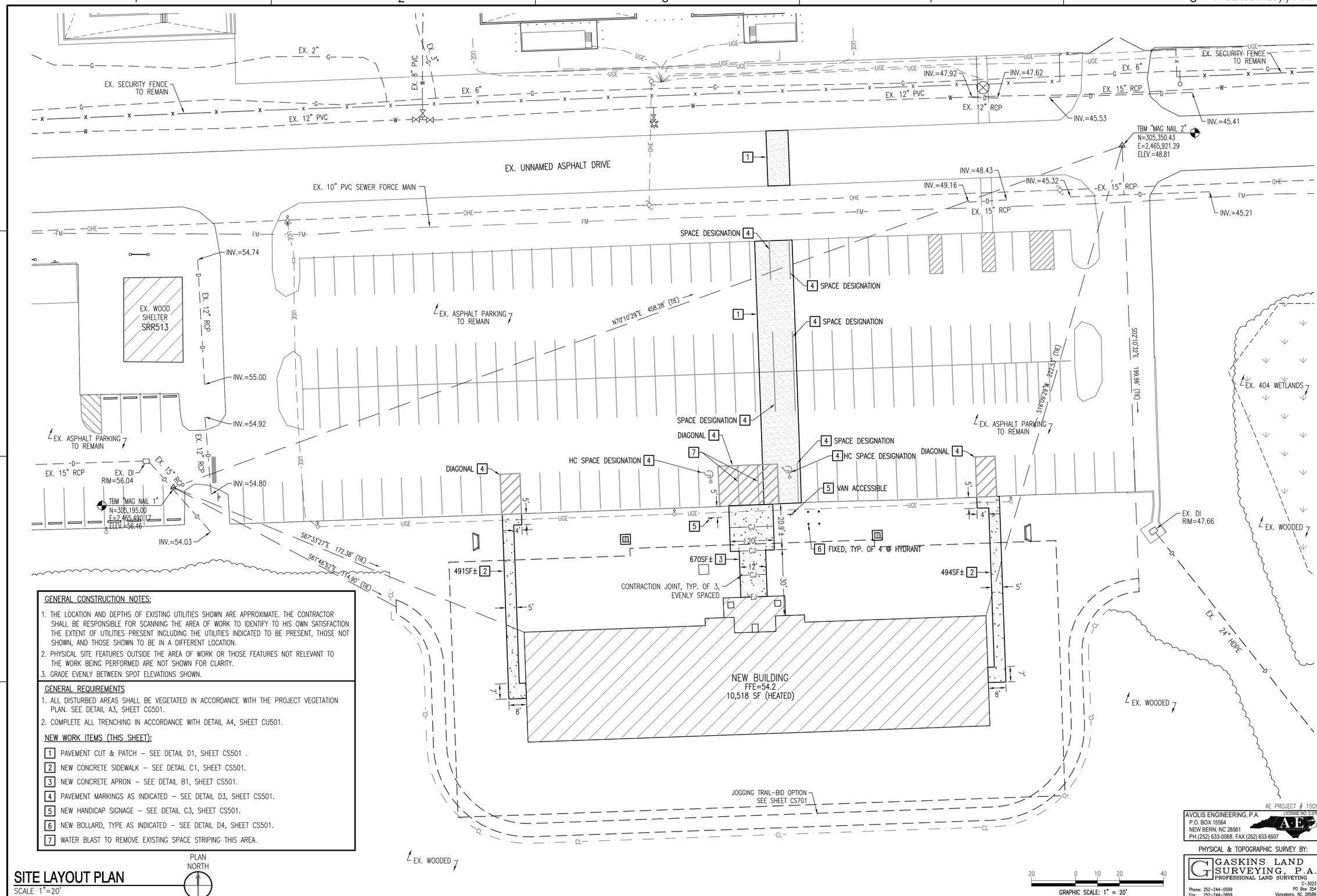

GENERAL CONSTRUCTION NOTES:

1. THE LOCATION AND DEPTHS OF EXISTING UTILITIES SHOWN ARE APPROXIMATE. THE CONTRACTOR SHALL BE RESPONSIBLE FOR SCANNING THE AREA OF WORK TO IDENTIFY TO HIS OWN SATISFACTION THE EXTENT OF UTILITIES PRESENT INCLUDING THE UTILITIES INDICATED TO BE PRESENT, THOSE NOT SHOWN, AND THOSE SHOWN TO BE IN A DIFFERENT LOCATION.
2. PHYSICAL SITE FEATURES OUTSIDE THE AREA OF WORK OR THOSE FEATURES NOT RELEVANT TO THE WORK BEING PERFORMED ARE NOT SHOWN FOR CLARITY.
3. GRADE EVENLY BETWEEN SPOT ELEVATIONS SHOWN.

GENERAL REQUIREMENTS

1. ALL DISTURBED AREAS SHALL BE VEGETATED IN ACCORDANCE WITH THE PROJECT VEGETATION PLAN. SEE DETAIL A3, SHEET CC501.
2. COMPLETE ALL TRENCHING IN ACCORDANCE WITH DETAIL A4, SHEET CU501.

NEW WORK ITEMS (THIS SHEET):

1. PAVEMENT CUT & PATCH – SEE DETAIL D1, SHEET CS501 .
2. NEW CONCRETE SIDEWALK – SEE DETAIL C1, SHEET CS501.
3. NEW CONCRETE APRON – SEE DETAIL B1, SHEET CS501.
4. PAVEMENT MARKINGS AS INDICATED – SEE DETAIL D3, SHEET CS501.
5. NEW HANDICAP SIGNAGE – SEE DETAIL C3, SHEET CS501.
6. NEW BOLLARD, TYPE AS INDICATED – SEE DETAIL D4, SHEET CS501.
7. WATER BLAST TO REMOVE EXISTING SPACE STRIPING THIS AREA.

SITE LAYOUT PLAN

SCALE 1"=20'

AE PROJECT # 15098

AVOLIS ENGINEERING, P.A.
LICENSE NO. C-0706
P.O. BOX 15564
NEW BERN, NC 28561
PH.(252) 633-0068, FAX (252) 633-6507

PHYSICAL & TOPOGRAPHIC SURVEY BY:

GASKINS LAND SURVEYING, P.A.
PROFESSIONAL LAND SURVEYING
C-3023
PO Box 354
Vanceboro, NC 28586
Phone: 252-244-0599
Fax: 252-244-5899

DEPARTMENT OF THE NAVY	NAVAL FACILITIES ENGINEERING COMMAND
NORTH CAROLINA RPT.	NAVAL FACILITIES ENGINEERING COMMAND NAVAL STATION – NORFOLK, VIRGINIA
MCB CAMP LEJEUNE	JACKSONVILLE, NC
P-1475 CULTURAL ASSIMILATION FACILITY	
SITE LAYOUT PLAN	
SCALE:	GRAPHIC
EPROJECT NO.:	1386337
CONSTR. CONTR. NO.	N40085-10-D-5301
NAVFAC DRAWING NO.	12711878
SHEET	6 OF 81
	CS101

NO WETLANDS EXIST WITHIN THE PROJECT LIMITS OF DISTURBANCE

NOTE:

1. ALL FILL MATERIAL NEEDED TO EXECUTE THIS PROJECT SHALL BE OBTAINED FROM A A PROPERLY PERMITTED COMMERCIAL BORROW PIT AT THE CONTRACTOR'S OWN EXPENSE.
2. NO WETLAND AREAS ARE LOCATED WITHIN THE PROJECT LIMITS OF DISTURBANCE.

GENERAL CONSTRUCTION NOTES:

1. THE LOCATION AND DEPTHS OF EXISTING UTILITIES SHOWN ARE APPROXIMATE. THE CONTRACTOR SHALL BE RESPONSIBLE FOR SCANNING THE AREA OF WORK TO IDENTIFY TO HIS OWN SATISFACTION THE EXTENT OF UTILITIES PRESENT INCLUDING THE UTILITIES INDICATED TO BE PRESENT, THOSE NOT SHOWN, AND THOSE SHOWN TO BE IN A DIFFERENT LOCATION.
2. PHYSICAL SITE FEATURES OUTSIDE THE AREA OF WORK OR THOSE FEATURES NOT RELEVANT TO THE WORK BEING PERFORMED ARE NOT SHOWN FOR CLARITY.
3. GRADE EVENLY BETWEEN SPOT ELEVATIONS SHOWN.
4. AFTER STRIPPING SITE AND PREPARING THE SUBGRADE, ALL FILL WITHIN AND AROUND THE BUILDING FOOTPRINT SHALL BE BROUGHT TO FINAL SUBGRADE ELEVATION. FOOTING AND SLAB CONSTRUCTION SHALL BE DELAYED FOR A MINIMUM OF 30 DAYS AFTER REACHING FINAL SUBGRADE ELEVATIONS. THE CONTRACTOR SHALL SCHEDULE AND SEQUENCE HIS WORK ACCORDINGLY.

GENERAL REQUIREMENTS

1. ALL DISTURBED AREAS SHALL BE VEGETATED IN ACCORDANCE WITH THE PROJECT VEGETATION PLAN. SEE DETAIL A3, SHEET CC501.
2. COMPLETE ALL TRENCHING IN ACCORDANCE WITH DETAIL A4, SHEET CU501.

NEW WORK ITEMS (THIS SHEET):

1. INSTALL TEMPORARY GRAVEL CONTROL ENTRANCE – SEE DETAIL D2 SHEET CC501.
2. INSTALL SILT FENCE – SEE DETAIL C1, SHEET CC501.
3. NEW VEGETATED SWALE – SEE DETAIL B1, SHEET CC501.
4. INSTALL CHECK DAM – SEE DETAIL A1, SHEET CC501.
5. DROP INLET PROTECTION – SEE DETAIL C3, SHEET CC501.
6. NEW DROP INLET – SEE DETAIL D5, SHEET CC501.
7. NEW GUTTER LEADER TRANSITION – SEE DETAIL B5, SHEET CC501.
8. NEW ENDWALL – SEE DETAIL A4, SHEET CC501.
9. NEW CLEANOUT – SEE DETAIL A3, SHEET CU501.
10. INSTALL JUTE MAT NETTING ON ALL PROJECT SLOPES OF 5:1 OR STEEPER UNTIL PERMANENT VEGETATION (SOD) CAN BE ESTABLISHED.

EROSION CONTROL NOTES:

SCHEDULE OF EROSION AND SEDIMENTATION CONTROL ACTIVITIES

1. INSTALL GRAVEL CONTROL ENTRANCE AT DESIGNATED PROJECT AREAS.
2. INSTALL SILT FENCING AND CHECK DAMS AT DESIGNATED PROJECT AREAS.
3. COMPLETE IMPROVEMENTS AS INDICATED.
4. STABILIZE AND SEED ALL AREAS NOT TO BE FURTHER DISTURBED BY CONSTRUCTION ACTIVITIES IN ACCORDANCE WITH THE PROJECT VEGETATION PLAN.
5. RESEED AS NECESSARY TO ESTABLISH FINAL VEGETATION.
6. ADDITIONAL MISCELLANEOUS EROSION CONTROL MEASURES MAY BE REQUIRED WHEN DEEMED NECESSARY BY THE CONTRACTING OFFICER OR THE NCDENR'S LAND QUALITY SECTION.
7. REMOVE SILT FENCING, DROP INLET PROTECTION, CHECK DAMS, AND GRAVEL CONTROL ENTRANCE ONCE VEGETATION IS 95% ESTABLISHED.

MAINTENANCE PLAN

1. THE PROJECT NPDES CONSTRUCTION PERMIT REQUIRES THAT EROSION CONTROL DEVICES AND STORM WATER OUTFALLS BE INSPECTED WEEKLY AND WITHIN 24 HOURS OF A 1/2-INCH RAIN EVENT. IT SHALL BE THE RESPONSIBILITY OF THE CONTRACTOR TO CONDUCT THESE INSPECTIONS AND MAINTAIN RECORDS UNTIL THE AREA HAS STABILIZED, EVIDENT BY 95% VEGETATIVE GROWTH FOR AREAS RECEIVING SEEDING. TO FACILITATE RAINFALL MONITORING, A RAIN GAUGE IS REQUIRED TO BE ON-SITE. ONCE STABILIZATION HAS BEEN ACCOMPLISHED, INSPECTION RECORDS ARE TO BE FORWARDED TO THE CONTRACTING OFFICER AND ALL TEMPORARY EROSION CONTROL MEASURES REMOVED. THE CONTRACTOR IS RESPONSIBLE FOR MAINTAINING COMPLIANCE WITH ALL PERMITS AND PLANS. ANY CHANGES MUST BE APPROVED BY THE STATE PRIOR TO EXECUTION. A COPY OF THE EROSION AND SEDIMENTATION CONTROL PLAN, LETTER OF APPROVAL AND NPDES CONSTRUCTION PERMIT MUST BE MAINTAINED BY THE CONTRACTOR AT THE PROJECT SITE.
2. ALL AREAS WILL BE FERTILIZED, SEEDED, RESEEDED AS NECESSARY, AND MULCHED ACCORDING TO SPECIFICATIONS IN THE VEGETATION PLAN IN ORDER TO ESTABLISH AND MAINTAIN A VIGOROUS, DENSE VEGETATIVE COVER. ANY SEDIMENT TRACKED ONTO THE ADJACENT ASPHALT ROAD SHALL BE REMOVED ON A DAILY BASIS.
3. SEDIMENT SHALL BE REMOVED FROM BEHIND SILT FENCING, CHECK DAMS, AND DROP INLET PROTECTION WHEN THE SEDIMENT ACCUMULATES TO A DEPTH OF SIX INCHES (6") MAXIMUM.

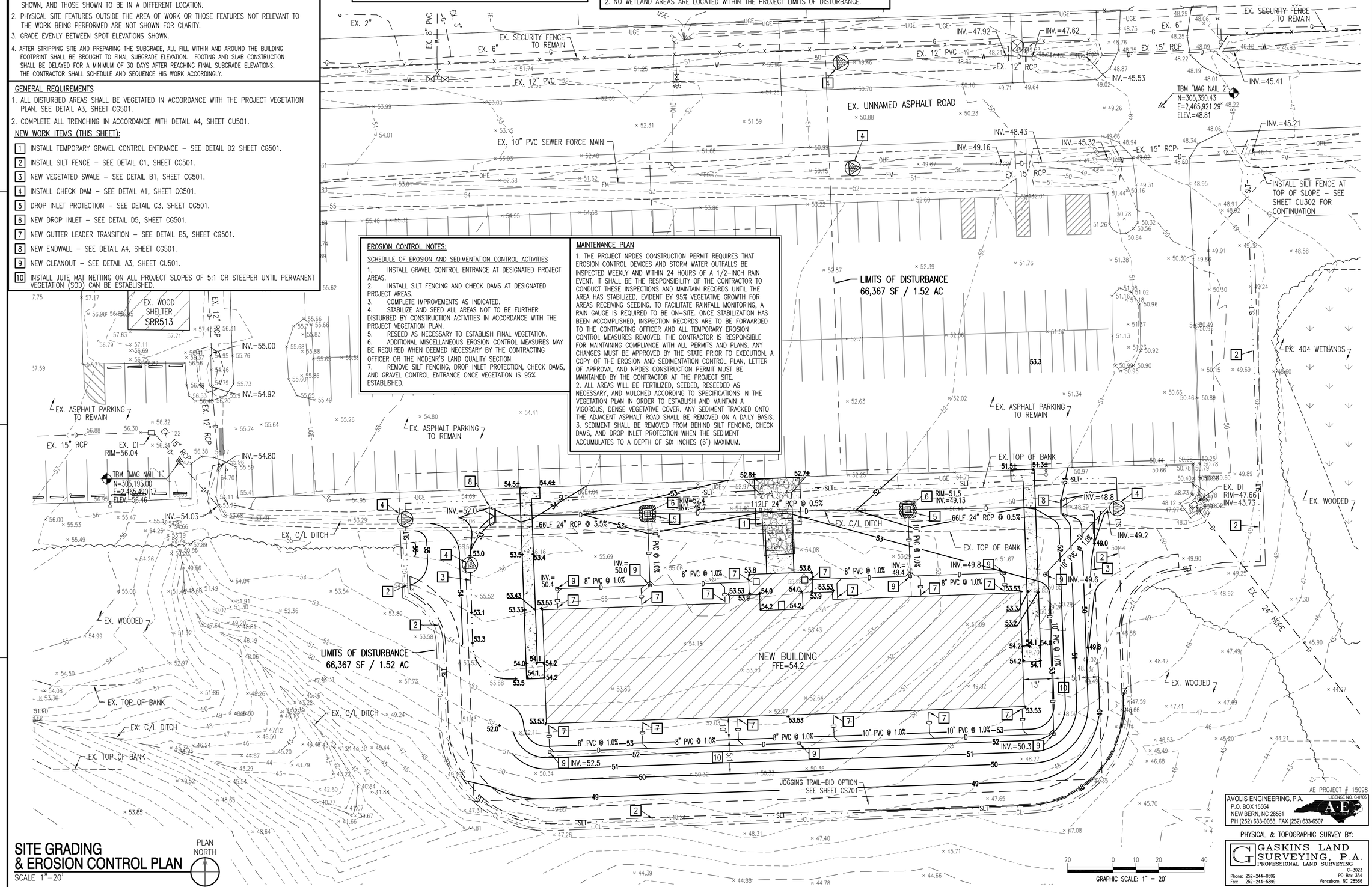

SITE GRADING & EROSION CONTROL PLAN

SCALE 1"=20'

PLAN NORTH

AVOLIS ENGINEERING, P.A.
P.O. BOX 15564
NEW BERN, NC 28561
PH.(252) 633-0068, FAX (252) 633-6507
LICENSE NO. C-0706

PHYSICAL & TOPOGRAPHIC SURVEY BY:
GASKINS LAND SURVEYING, P.A.
PROFESSIONAL LAND SURVEYING
C-3023
Phone: 252-244-0599 Fax: 252-244-5899
PO Box 354 Vanceboro, NC 28586

AE PROJECT # 15098

NAVFAC

NORTH CAROLINA PROFESSIONAL SEAL 15733 ENGINEER JOHN K. AVOLIS

HBA

APPROVED
FOR COMMANDER NAVFAC
ACTIVITY
SATISFACTORY TO DATE

DES	JKA	DRW	WWF	CHK	JKA

PM
BRANCH MANAGER
CHIEF ENG/ARCH
FIRE PROTECTION

DEPARTMENT OF THE NAVY
NAVAL FACILITIES ENGINEERING COMMAND
NORTH CAROLINA IPT
NAVAL FACILITIES ENGINEERING COMMAND
NAVAL STATION – NORFOLK, VIRGINIA
MCB CAMP LEJEUNE
JACKSONVILLE, NC
P-1475 CULTURAL ASSIMILATION FACILITY
SITE GRADING & EROSION CONTROL PLAN

SCALE:	GRAPHIC
EPROJECT NO.:	1386337
CONSTR. CONTR. NO.	N40085-10-D-5301
NAVFAC DRAWING NO.	12711879
SHEET	7 OF 81

CG101

DRAWFORM REVISION: 10 MAY 2014

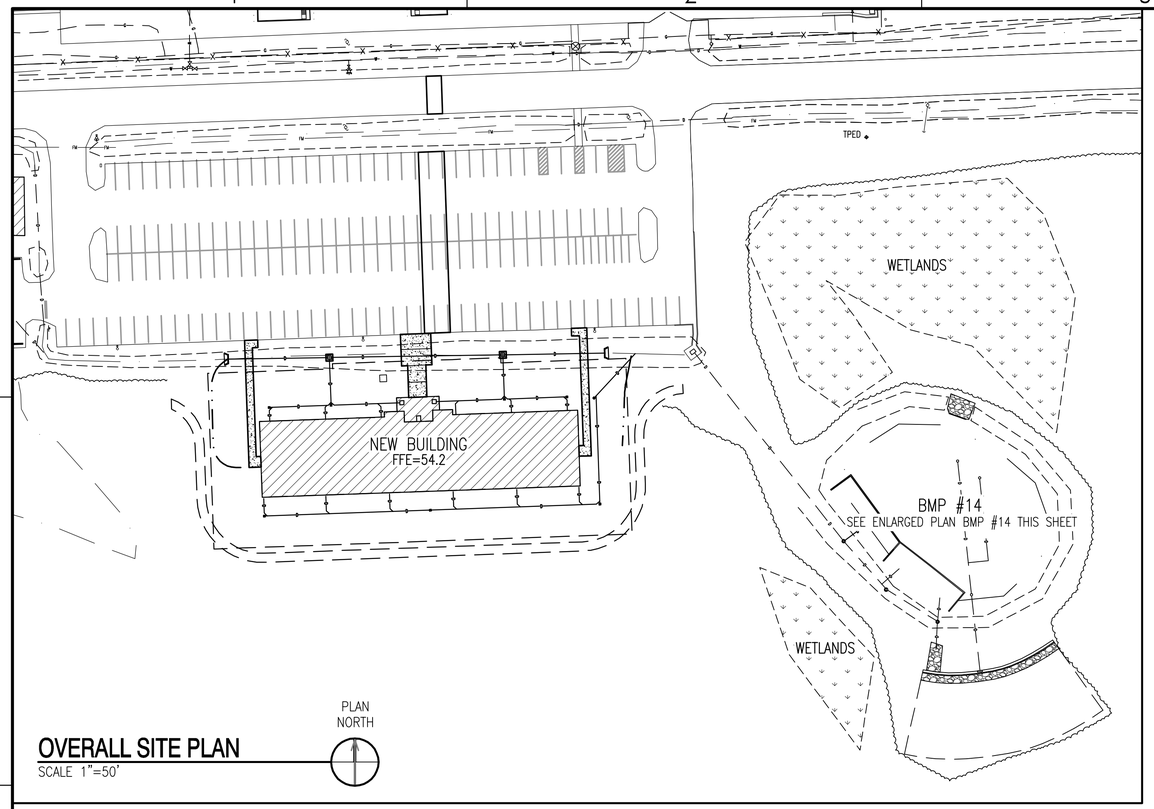

OVERALL SITE PLAN

SCALE 1"=50'

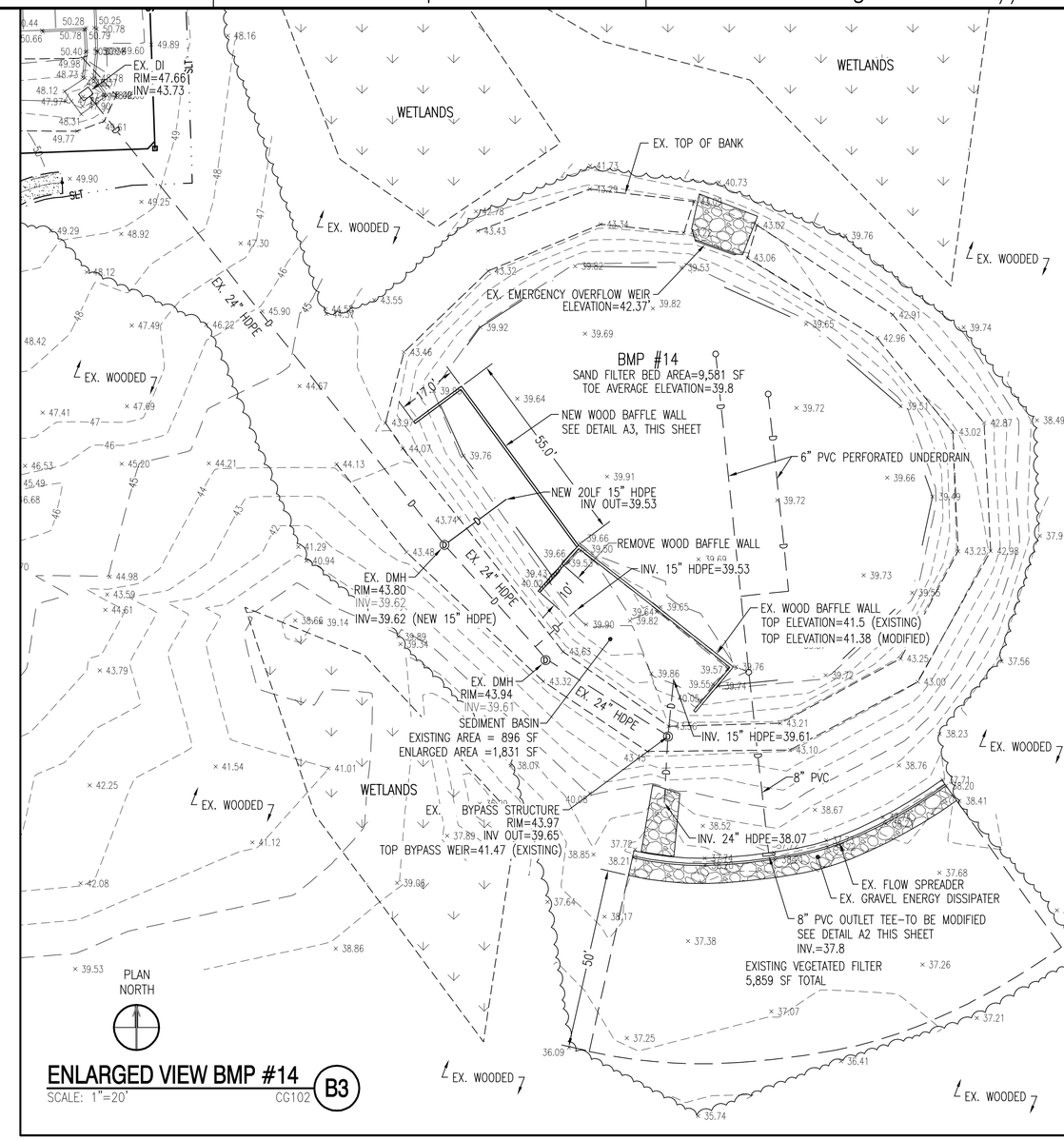

ENLARGED VIEW BMP #14

SCALE: 1"=20' CG102 B3

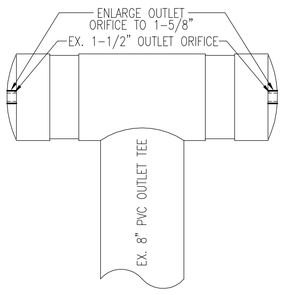

PLAN

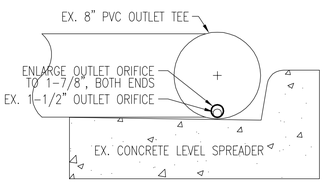

ELEVATION

ORIFICE MODIFICATION - BMP #14

NOT TO SCALE CG102 A2

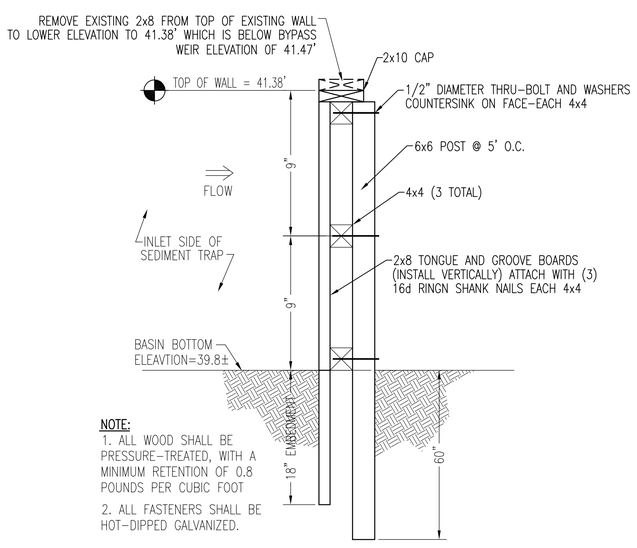

NOTE:

1. ALL WOOD SHALL BE PRESSURE-TREATED, WITH A MINIMUM RETENTION OF 0.8 POUNDS PER CUBIC FOOT
2. ALL FASTENERS SHALL BE HOT-DIPPED GALVANIZED.

SEDIMENT BASIN BAFFLE WALL/MODIFICATION-SECTION

NOT TO SCALE CG102 A3

GRAPHIC SCALE: 1" = 20'

GRAPHIC SCALE: 1" = 50'

AE PROJECT # 15098

AVOLIS ENGINEERING, P.A.
LICENSE NO. C-0706
P.O. BOX 15564
NEW BERN, NC 28561
PH.(252) 633-0068, FAX (252) 633-6507

PHYSICAL & TOPOGRAPHIC SURVEY BY:

GASKINS LAND SURVEYING, P.A.
PROFESSIONAL LAND SURVEYING
C-3023
Phone: 252-244-0599 PO Box 354
Fax: 252-244-5899 Vanceboro, NC 28586

NAVFAC

NORTH CAROLINA PROFESSIONAL SEAL 15733 ENGINEER JOHN K. AVOLIS

HBA

APPROVED

FOR COMMANDER NAVFAC

ACTIVITY

SATISFACTORY TO DATE

DES	JKA	DRW	WWF	CHK	JKA

PM

BRANCH MANAGER

CHIEF ENG/ARCH

FIRE PROTECTION

DEPARTMENT OF THE NAVY
NAVAL FACILITIES ENGINEERING COMMAND
NAVAL FACILITIES ENGINEERING COMMAND, NORFOLK, VIRGINIA
NORTH CAROLINA IPT
NAVAL STATION - NORFOLK, VIRGINIA
MCB CAMP LEJEUNE
JACKSONVILLE, NC

P-1475 CULTURAL ASSIMILATION FACILITY

OVERALL SITE PLAN AND BMP #14 MODIFICATIONS

SCALE:	GRAPHIC
EPROJECT NO.:	1386337
CONSTR. CONTR. NO.	N40085-10-D-5301
NAVFAC DRAWING NO.	12711880
SHEET	8 OF 81

CG102

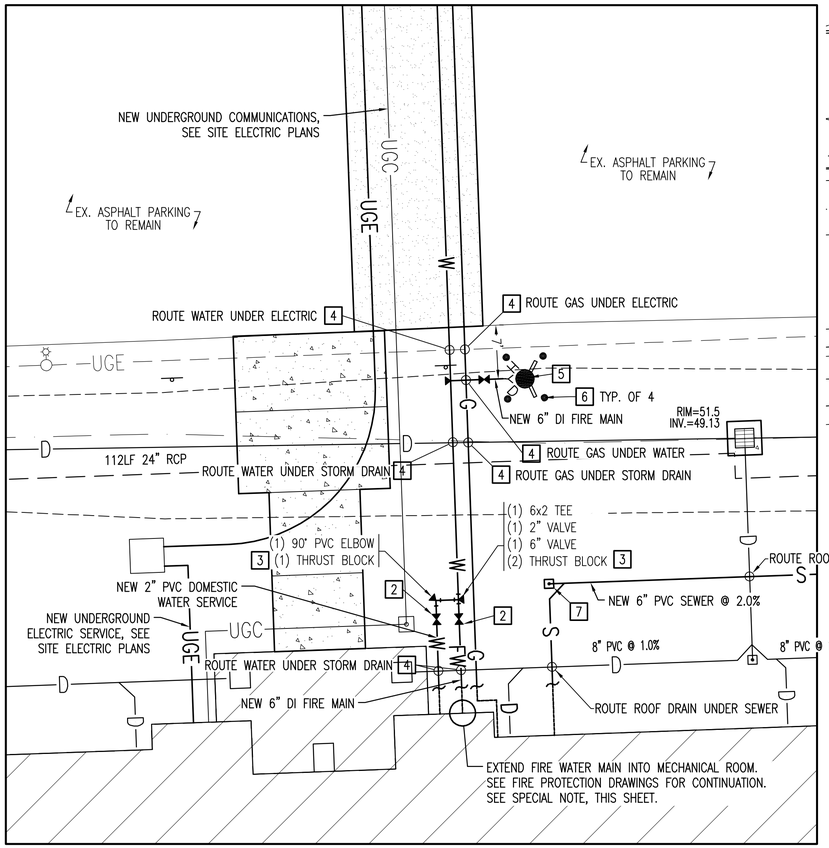

ENLARGED SITE UTILITY PLAN

SCALE 1"=10'

PLAN NORTH

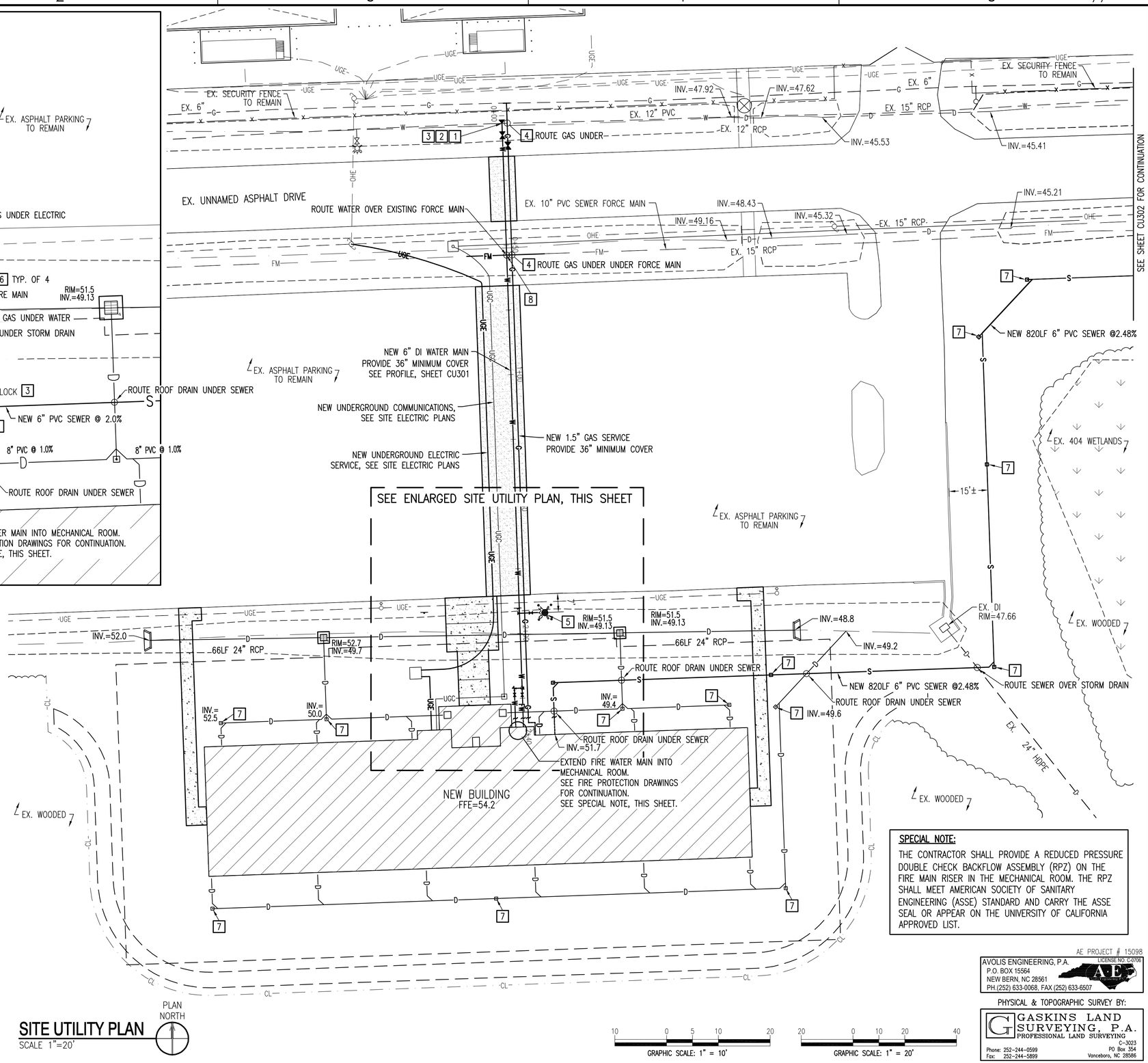

SITE UTILITY PLAN

SCALE 1"=20'

PLAN NORTH

GRAPHIC SCALE: 1" = 10'

GRAPHIC SCALE: 1" = 20'

GENERAL CONSTRUCTION NOTES:

1. THE LOCATION AND DEPTHS OF EXISTING UTILITIES SHOWN ARE APPROXIMATE. THE CONTRACTOR SHALL BE RESPONSIBLE FOR SCANNING THE AREA OF WORK TO IDENTIFY TO HIS OWN SATISFACTION THE EXTENT OF UTILITIES PRESENT INCLUDING THE UTILITIES INDICATED TO BE PRESENT, THOSE NOT SHOWN, AND THOSE SHOWN TO BE IN A DIFFERENT LOCATION.
2. PHYSICAL SITE FEATURES OUTSIDE THE AREA OF WORK OR THOSE FEATURES NOT RELEVANT TO THE WORK BEING PERFORMED ARE NOT SHOWN FOR CLARITY.
3. GRADE EVENLY BETWEEN SPOT ELEVATIONS SHOWN.

GENERAL REQUIREMENTS

1. ALL DISTURBED AREAS SHALL BE VEGETATED IN ACCORDANCE WITH THE PROJECT VEGETATION PLAN. SEE DETAIL A3, SHEET CG501.
2. COMPLETE ALL TRENCHING IN ACCORDANCE WITH DETAIL A4, SHEET CU501.

NEW WORK ITEMS (THIS SHEET):

1. NEW 12x6 TAPPING SADDLE AND VALVE – SEE DETAIL D1, SHEET CU501.
2. NEW VALVE – SEE DETAIL C1, SHEET CU501.
3. THRUST BLOCK – SEE DETAIL A1, SHEET CU501.
4. UTILITY CROSSING AS INDICATED – SEE DETAIL C3, SHEET CU501.
5. NEW FIRE HYDRANT – SEE DETAIL B3, SHEET CU501.
6. NEW BOLLARD – SEE DETAIL D4, SHEET CS501.
7. NEW CLEANOUT – SEE DETAIL A3, SHEET CU501.
8. INSTALL 30LF 10" DI FORCE MAIN, CENTERED AT CROSSING.

SPECIAL NOTE:

THE CONTRACTOR SHALL PROVIDE A REDUCED PRESSURE DOUBLE CHECK BACKFLOW ASSEMBLY (RPZ) ON THE FIRE MAIN RISER IN THE MECHANICAL ROOM. THE RPZ SHALL MEET AMERICAN SOCIETY OF SANITARY ENGINEERING (ASSE) STANDARD AND CARRY THE ASSE SEAL OR APPEAR ON THE UNIVERSITY OF CALIFORNIA APPROVED LIST.

AE PROJECT # 15098
AVOLIS ENGINEERING, P.A.
P.O. BOX 15564
NEW BERN, NC 28561
PH.(252) 633-0068, FAX (252) 633-6507
LICENSE NO. C-0706

PHYSICAL & TOPOGRAPHIC SURVEY BY:
GASKINS LAND SURVEYING, P.A.
PROFESSIONAL LAND SURVEYING
C-3023
PO Box 354
Vanceboro, NC 28586
Phone: 252-244-0599
Fax: 252-244-5899

NO.	DESCRIPTION	DATE	BY

NAVFAC

NORTH CAROLINA PROFESSIONAL SEAL 15733 ENGINEER JOHN K. AVOLIS

HBA

A/E INFO

APPROVED

FOR COMMANDER NAVFAC

ACTIVITY

SATISFACTORY TO DATE

DES	JKA	DRW	WWF	CHK	JKA

FM

BRANCH MANAGER

CHIEF ENG/ARCH

FIRE PROTECTION

DEPARTMENT OF THE NAVY
NAVAL FACILITIES ENGINEERING COMMAND
NAVAL FACILITIES ENGINEERING COMMAND
NAVAL STATION – NORFOLK, VIRGINIA
NORTH CAROLINA IPT
MCB CAMP LEJEUNE
JACKSONVILLE, NC

P-1475 CULTURAL ASSIMILATION FACILITY

SITE UTILITY PLAN

SCALE: GRAPHIC
EPROJECT NO.: 1386337
CONSTR. CONTR. NO. N40085-10-D-5301
NAVFAC DRAWING NO. 12711881
SHEET 9 OF 81

CU101

DRAWFORM REVISION: 13 MAY 2014

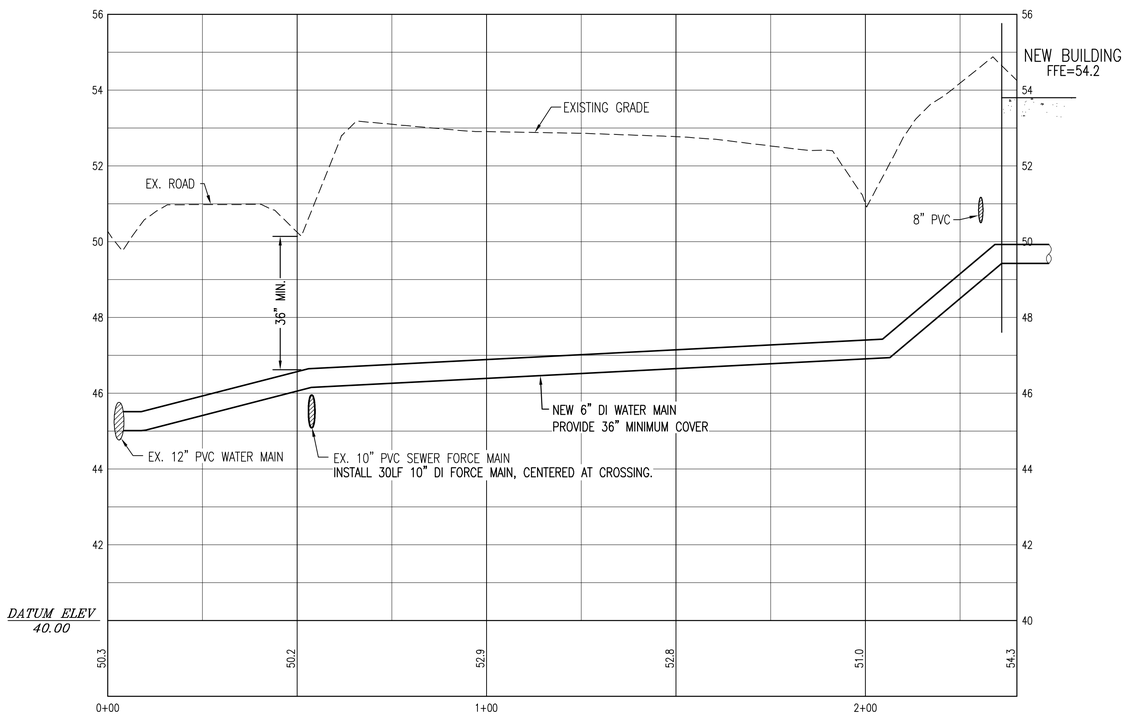

WATER MAIN - PROFILE

SCALE: HORIZONTAL 1"=20'
SCALE: VERTICAL 1"=2'

CU301 A1

GENERAL CONSTRUCTION NOTES:

1. THE LOCATION AND DEPTHS OF EXISTING UTILITIES SHOWN ARE APPROXIMATE. THE CONTRACTOR SHALL BE RESPONSIBLE FOR SCANNING THE AREA OF WORK TO IDENTIFY TO HIS OWN SATISFACTION THE EXTENT OF UTILITIES PRESENT INCLUDING THE UTILITIES INDICATED TO BE PRESENT, THOSE NOT SHOWN, AND THOSE SHOWN TO BE IN A DIFFERENT LOCATION.
2. PHYSICAL SITE FEATURES OUTSIDE THE AREA OF WORK OR THOSE FEATURES NOT RELEVANT TO THE WORK BEING PERFORMED ARE NOT SHOWN FOR CLARITY.
3. GRADE EVENLY BETWEEN SPOT ELEVATIONS SHOWN.

GENERAL REQUIREMENTS

1. ALL DISTURBED AREAS SHALL BE VEGETATED IN ACCORDANCE WITH THE PROJECT VEGETATION PLAN. SEE DETAIL A3, SHEET CG501.
2. COMPLETE ALL TRENCHING IN ACCORDANCE WITH DETAIL A4, SHEET CU501.

GRAPHIC SCALE: 1" = 2'

GRAPHIC SCALE: 1" = 20'

AE PROJECT # 15098

AVOLIS ENGINEERING, P.A.
P.O. BOX 15564
NEW BERN, NC 28561
PH.(252) 633-0068, FAX (252) 633-6507
LICENSE NO. C-0706

PHYSICAL & TOPOGRAPHIC SURVEY BY:

GASKINS LAND SURVEYING, P.A.
PROFESSIONAL LAND SURVEYING
C-3023
PO Box 354
Vanceboro, NC 28586
Phone: 252-244-0599
Fax: 252-244-5899

NAVFAC

NORTH CAROLINA PROFESSIONAL SEAL 15733 ENGINEER JOHN K. AVOLIS

HBA

APPROVED

FOR COMMANDER NAVFAC

ACTIVITY

SATISFACTORY TO DATE

DES JKA DRW WWF CHK JKA

PM

BRANCH MANAGER

CHIEF ENG/ARCH

FIRE PROTECTION

DEPARTMENT OF THE NAVY
NAVAL FACILITIES ENGINEERING COMMAND
NAVAL FACILITIES ENGINEERING COMMAND
NORTH CAROLINA IPT
NAVAL STATION - NORFOLK, VIRGINIA
MCB CAMP LEJEUNE
JACKSONVILLE, NC

P-1475 CULTURAL ASSIMILATION FACILITY

WATER MAIN PROFILE

SCALE: GRAPHIC
EPROJECT NO.: 1386337
CONSTR. CONTR. NO. N40085-10-D-5301
NAVFAC DRAWING NO. 12711882
SHEET 10 OF 81

CU301

DRAWFORM REVISION: 10 MAY 2014

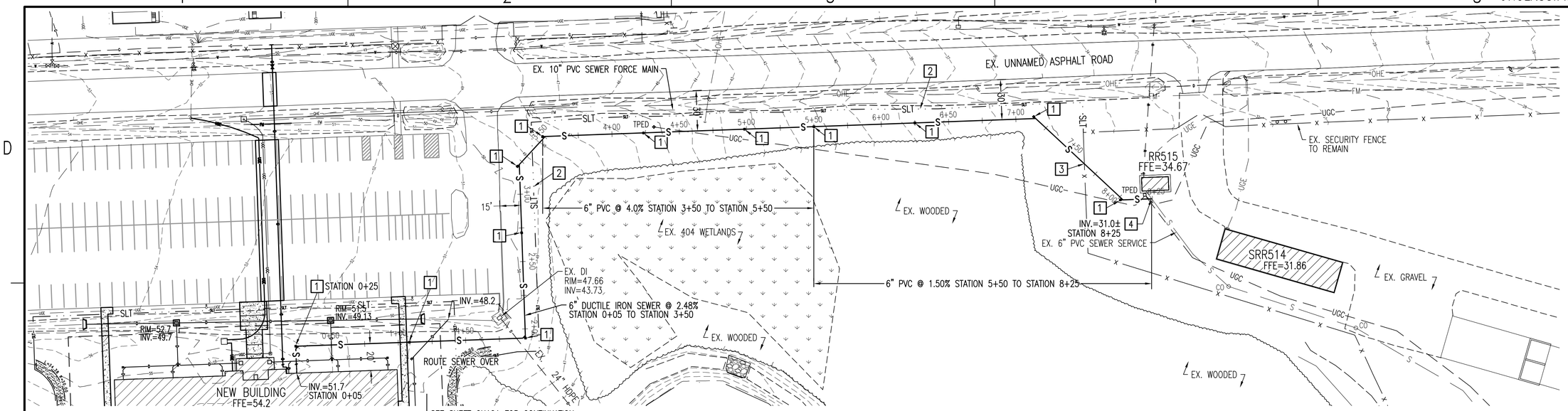

OFF-SITE SEWER - PLAN VIEW

SCALE 1"=40' CU302

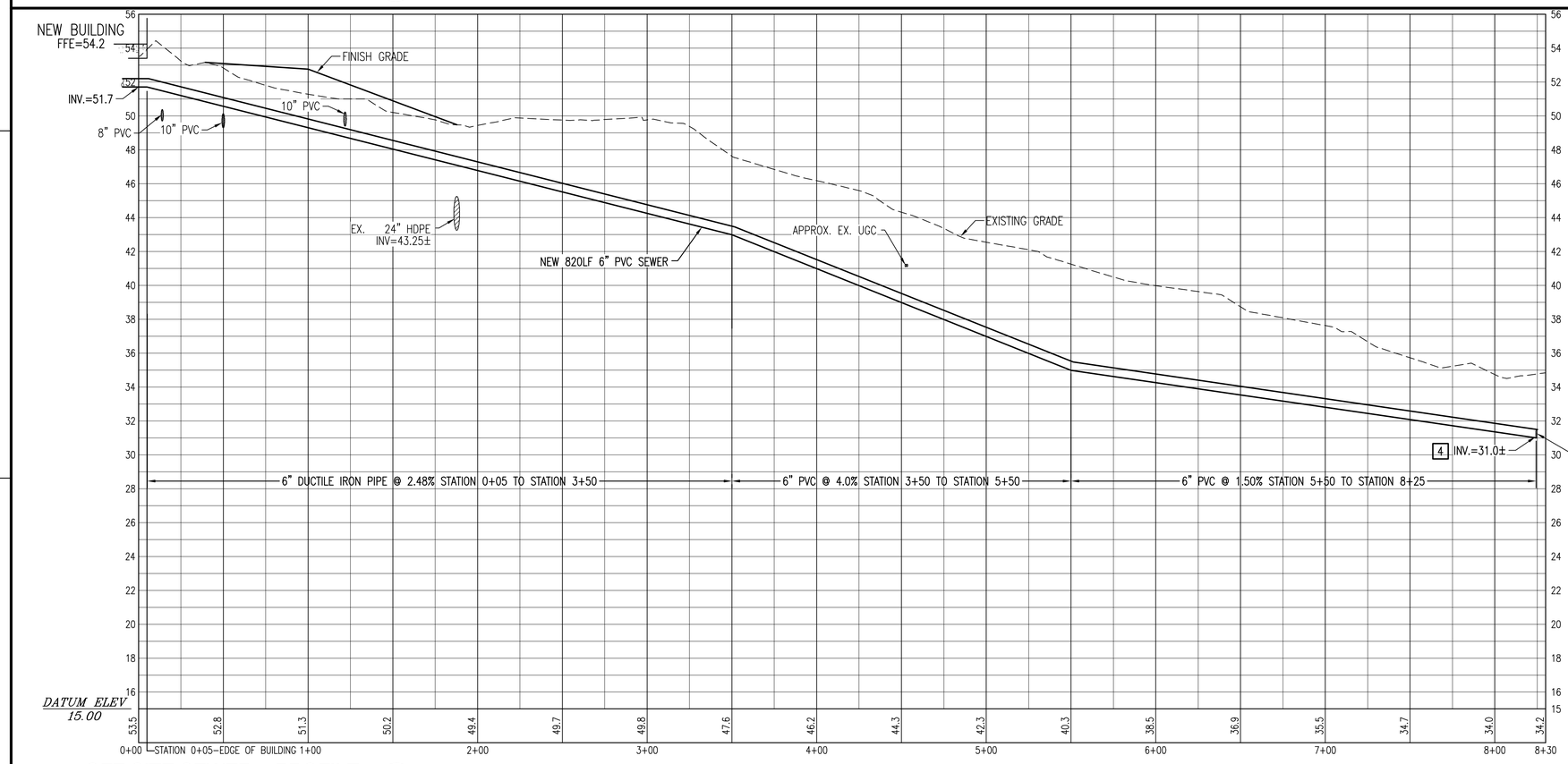

OFF-SITE SEWER - PROFILE

SCALE: HORIZONTAL 1"=40'
SCALE: VERTICAL 1"=4'

CU302 A1

GENERAL CONSTRUCTION NOTES:

1. THE LOCATION AND DEPTHS OF EXISTING UTILITIES SHOWN ARE APPROXIMATE. THE CONTRACTOR SHALL BE RESPONSIBLE FOR SCANNING THE AREA OF WORK TO IDENTIFY TO HIS OWN SATISFACTION THE EXTENT OF UTILITIES PRESENT INCLUDING THE UTILITIES INDICATED TO BE PRESENT, THOSE NOT SHOWN, AND THOSE SHOWN TO BE IN A DIFFERENT LOCATION.
2. PHYSICAL SITE FEATURES OUTSIDE THE AREA OF WORK OR THOSE FEATURES NOT RELEVANT TO THE WORK BEING PERFORMED ARE NOT SHOWN FOR CLARITY.
3. GRADE EVENLY BETWEEN SPOT ELEVATIONS SHOWN.

GENERAL REQUIREMENTS

1. ALL DISTURBED AREAS SHALL BE VEGETATED IN ACCORDANCE WITH THE PROJECT VEGETATION PLAN. SEE DETAIL A3, SHEET CC501.
2. COMPLETE ALL TRENCHING IN ACCORDANCE WITH DETAIL A4, SHEET CU501.

NEW WORK ITEMS (THIS SHEET):

1. NEW CLEANOUT – SEE DETAIL A3, SHEET CU501.
2. INSTALL SILT FENCE – SEE DETAIL C1, SHEET CC501.
3. REMOVE/REINSTALL EXISTING FENCE FABRIC AS NEEDED TO INSTALL SEWER.
4. INSERT 6x6 WYE IN EXISTING 6" PVC MAKE CONNECTION TO NEW 6" SERVICE.

GRAPHIC SCALE: 1" = 4'

GRAPHIC SCALE: 1" = 40'

AE PROJECT # 15098

AVOLIS ENGINEERING, P.A.
LICENSE NO. C-0706
P.O. BOX 15564
NEW BERN, NC 28561
PH.(252) 633-0068, FAX (252) 633-6507

PHYSICAL & TOPOGRAPHIC SURVEY BY:

GASKINS LAND SURVEYING, P.A.
PROFESSIONAL LAND SURVEYING
C-3023
Phone: 252-244-0599
Fax: 252-244-5899
PO Box 354
Vanceboro, NC 28586

NAVFAC

NORTH CAROLINA PROFESSIONAL SEAL 15733 ENGINEER JOHN K. AVOLIS

HBA

APPROVED

FOR COMMANDER NAVFAC

ACTIVITY

SATISFACTORY TO DATE

DES	JKA	DRW	WWF	CHK	JKA

PM

BRANCH MANAGER

CHIEF ENG/ARCH

FIRE PROTECTION

DEPARTMENT OF THE NAVY
NAVAL FACILITIES ENGINEERING COMMAND
NAVAL FACILITIES ENGINEERING COMMAND, NORFOLK, VIRGINIA
NORTH CAROLINA IPT
NAVAL STATION – NORFOLK, VIRGINIA
MCB CAMP LEJEUNE
JACKSONVILLE, NC
P-1475 CULTURAL ASSIMILATION FACILITY
OFF-SITE SEWER – PLAN AND PROFILE

SCALE: GRAPHIC
EPROJECT NO.: 1386337
CONSTR. CONTR. NO. N40085-10-D-5301
NAVFAC DRAWING NO. 12711883
SHEET 11 OF 81

CU302

DRAWFORM REVISION: 10 MAY 2014

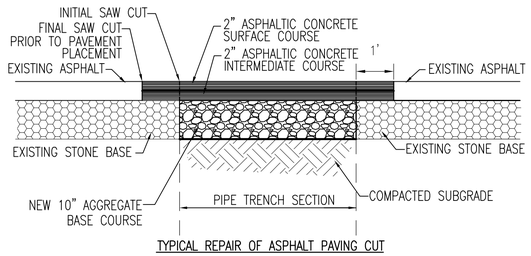

TYPICAL REPAIR OF ASPHALT PAVING CUT

CUT & PATCH

NOT TO SCALE CS101 **D1**

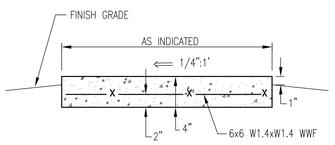

NOTES:

1. PROVIDE EXPANSION JOINTS ALONG ALL EXISTING STRUCTURES AND WALKS AND AT 50' INTERVALS ALONG STRAIGHT SECTIONS OF WALK.
2. PROVIDE CONTRACTION JOINTS AT 5'-0" INTERVALS AND AT ALL CHANGES IN DIRECTION OF WALK.
3. CONTRACTION JOINTS SHALL BE 1/8" WIDE X 3/4" DEEP.

CONCRETE SIDEWALK

NOT TO SCALE CS101 **C1**

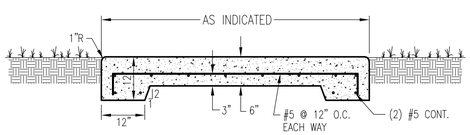

PROVIDE THICKENED SLAB ALONG ALL EDGES.

CJ = CONTRACTION JOINT, SEE DETAIL A1, THIS SHEET
EJ= EXPANSION JOINT, SEE DETAIL A1, THIS SHEET

CONCRETE APRON

NOT TO SCALE CS101 **B1**

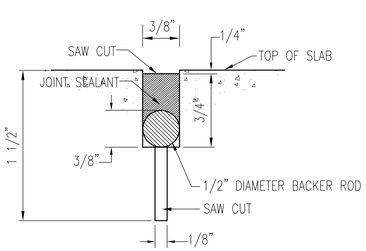

TYPICAL CONTRACTION JOINT (CJ)

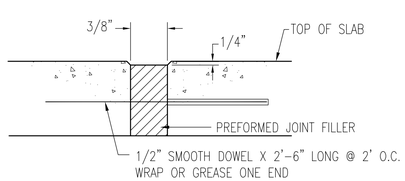

TYPICAL EXPANSION JOINT (EJ)

SLAB-ON-GRADE JOINTS

NOT TO SCALE CS101 **A1**

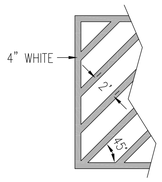

DIAGONAL STRIPING-WHITE

SOLID SPACE DESIGNATION LINE-WHITE

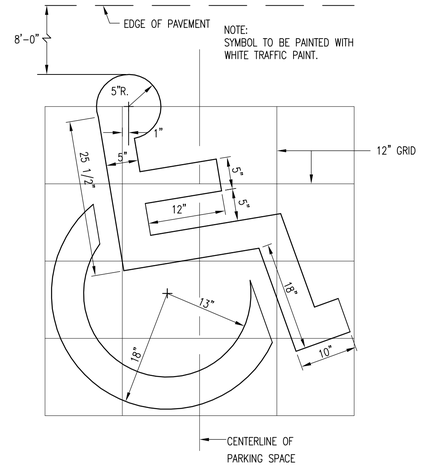

HANDICAP SPACE DESIGNATION

PAVEMENT MARKINGS

NOT TO SCALE CS101 **D3**

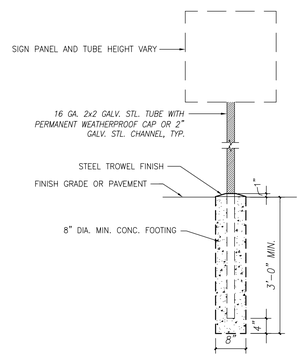

SIGN MOUNTING

SIGNAGE

NOT TO SCALE CS101 **C3**

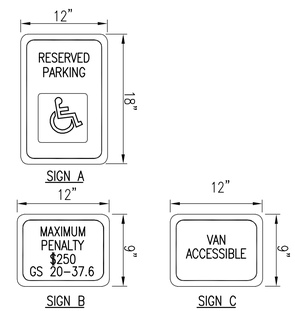

NOTES:

1. COLORS
   BACKGROUND: WHITE
   LEGEND AND BORDER: GREEN
   WHITE SYMBOL ON BLUE BACKGROUND
2. MOUNT THE SIGN 60" ABOVE GRADE.
3. PROVIDE SIGN A AND B AT REGULAR HC SPACE.
4. PROVIDE SIGNS A, B AND C AT VAN ACCESSIBLE HC SPACE.

HANDICAP PARKING SIGNAGE

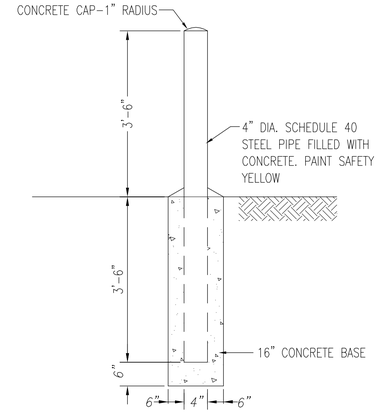

FIXED BOLLARD

BOLLARD

NOT TO SCALE CS101 **D4**

AE PROJECT # 15098

AVOLIS ENGINEERING, P.A.
P.O. BOX 15564
NEW BERN, NC 28561
PH.(252) 633-0068, FAX (252) 633-6507
LICENSE NO. C-0700

PHYSICAL & TOPOGRAPHIC SURVEY BY:

GASKINS LAND SURVEYING, P.A.
PROFESSIONAL LAND SURVEYING
C-3023
Phone: 252-244-0599
Fax: 252-244-5899
PO Box 354
Vanceboro, NC 28586

NO.	DESCRIPTION	TIM	DATE	APPR

NAVFAC

NORTH CAROLINA PROFESSIONAL SEAL 15733 2/3/14 ENGINEER JOHN K. AVOLIS

SEAL

HBA

A/E INFO

APPROVED

FOR COMMANDER NAVFAC

ACTIVITY

SATISFACTORY TO DATE

DES	JKA	DRW	WWF	CHK	JKA

PM

BRANCH MANAGER

CHIEF ENG/ARCH

FIRE PROTECTION

DEPARTMENT OF THE NAVY
NAVAL FACILITIES ENGINEERING COMMAND
NAVAL FACILITIES ENGINEERING COMMAND
NORFOLK, VIRGINIA
NAVAL STATION
NORTH CAROLINA IPT
MCB CAMP LEJEUNE
JACKSONVILLE, NC
P-1475 CULTURAL ASSIMILATION FACILITY
SITE DETAILS

SCALE: GRAPHIC
EPROJECT NO.: 1386337
CONSTR. CONTR. NO. N40085-10-D-5301
NAVFAC DRAWING NO. 12711884
SHEET 12 OF 81
CS501

DRAWFORM REVISION: 10 MAY 2014

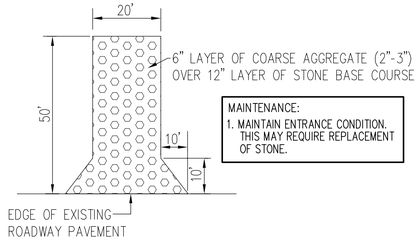

MAINTENANCE:
1. MAINTAIN ENTRANCE CONDITION. THIS MAY REQUIRE REPLACEMENT OF STONE.

TEMPORARY GRAVEL CONTROL ENTRANCE (D2)
NOT TO SCALE CG101

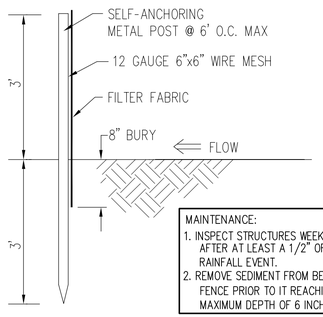

MAINTENANCE:
1. INSPECT STRUCTURES WEEKLY AND AFTER AT LEAST A 1/2" OR GREATER RAINFALL EVENT.
2. REMOVE SEDIMENT FROM BEHIND SILT FENCE PRIOR TO IT REACHING A MAXIMUM DEPTH OF 6 INCHES.

SILT FENCE (C1)
NOT TO SCALE CG101

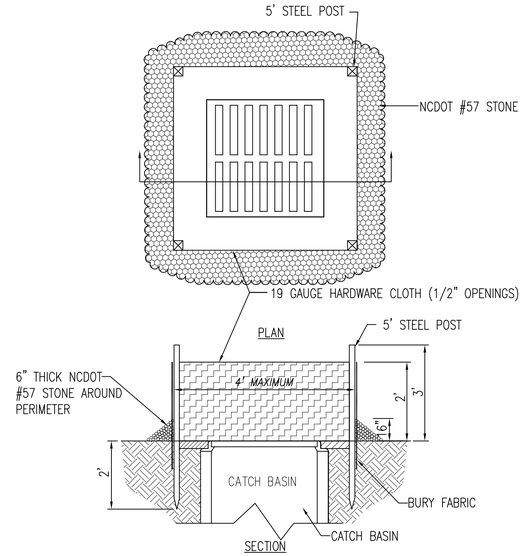

NOTE:
UNIFORMLY GRADE A SHALLOW DEPRESSION APPROACHING THE INLET.

NOTE:
PROVIDE DROP INLET PROTECTION AT ALL DRAINAGE STRUCTURES.

MAINTENANCE:
1. INSPECT STRUCTURES WEEKLY AND AFTER AT LEAST A 1/2" OR GREATER RAINFALL EVENT.
2. CLEAR DEBRIS AND REPLACE STONE AS NEEDED.
3. REMOVED ACCUMULATED SEDIMENT WHEN IT REACHES A MAXIMUM DEPTH OF 6 INCHES.

DROP INLET PROTECTION (C3)
NOT TO SCALE CG101

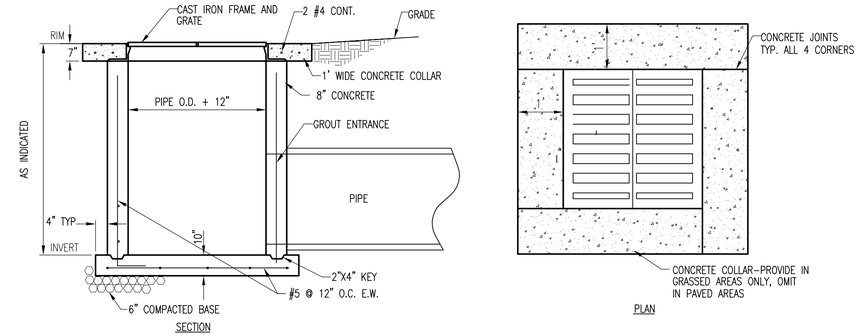

DROP INLET (D5)
NOT TO SCALE CG101

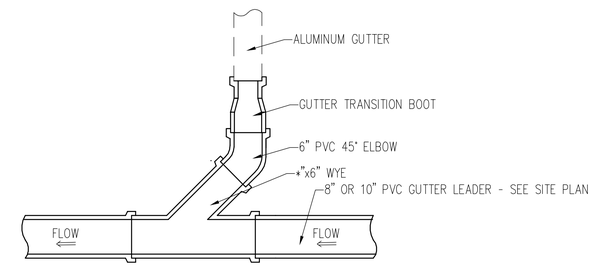

GUTTER LEADER TRANSITION (B5)
NOT TO SCALE CG101

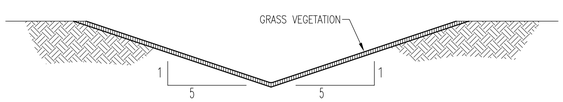

VEGETATED SWALE (B1)
NOT TO SCALE CG101

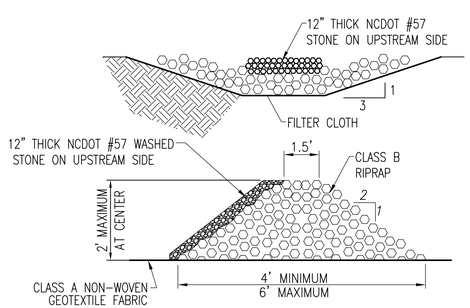

MAINTENANCE

1. CONSTRUCT CHECK DAM OF RIP RAP STONE PLACED IN ACCORDANCE WITH DETAIL.

2. SEDIMENT BEHIND THE CHECK DAM SHALL BE REMOVED PRIOR TO THE LEVEL REACHING WITHIN 6" OF THE CENTERLINE CREST OF THE DAM.

3. SHOULD SCOUR DEVELOP AT THE DOWNSTREAM END, IT SHALL BE REPAIRED IMMEDIATELY.

CHECK DAM (A1)
NOT TO SCALE CG101

TEMPORARY VEGETATIVE SEEDING
(PRIOR TO ESTABLISHING PERMANENT VEGETATION)

AFTER COMPLETION OF GRADING ACTIVITIES AND THE CONSTRUCTION OF SWALES, ALL EXPOSED AREAS SHALL BE SEEDED TO THE FOLLOWING SPECIFICATIONS:

SEED BED

LIME	1-1/2 TON PER ACRE
FERTILIZER	1/2-TON PER ACRE

SEED

RYE GRAIN	50 LBS PER ACRE
TALL FESCUE	100 LBS PER ACRE

SUPPLEMENTAL SEED

MAY THROUGH AUGUST:

CENTIPEDE	5 LBS PER ACRE

PROCEDURE

STRAW MULCH SHALL BE APPLIED AT A RATE WHICH WILL INSURE APPROXIMATELY 75% COVERAGE OF THE SEEDED AREA. THE STRAW AND SOWN SEED WILL BE LIGHTLY DISCED INTO THE BED TO GIVE IT FURTHER RESISTANCE TO BLOWING AND WASHING. THE CONTRACTOR SHALL GUARANTEE A FULL STAND OF GRASS OVER THE ENTIRE DISTURBED AREA. IF NECESSARY THE CONTRACTOR WILL WET DOWN THE AREAS TO ASSIST IN SEED GERMINATION OR AID IN GROWTH IN TIMES OF EXCESSIVELY DRY WEATHER. A STAND OF GRASS WILL BE CONSIDERED ACCEPTABLE WHEN THE ENTIRE STAND OF GRASS IS AT LEAST FOUR INCHES HIGH AND HAS ACHIEVED AT LEAST 95% COVERAGE OF DISTURBED AREAS. RESEEDING WILL BE REQUIRED AS NECESSARY BY THE CONTRACTOR TO OBTAIN THE SPECIFIED STAND OF GRASS.

PERMANENT VEGETATION

ALL DISTURBED AREAS NOT COVERED WITH BUILDINGS, PAVEMENTS, OR OTHER IMPERMEABLE SURFACES SHALL BE SODDED WITH CENTIPEDE SOD AS THE FINAL/ PERMANENT VEGETATION.

SPECIAL SEEDING NOTE:

CUT & FILL SLOPES 3:1 OR FLATTER WILL, WITHIN 7 CALENDAR DAYS OF COMPLETION OF ANY PHASE OF GRADING, BE PLANTED AND PROVIDED WITH TEMPORARY OR PERMANENT GROUND COVER, DEVICES, OR STRUCTURES SUFFICIENT TO RESTRAIN EROSION. ADDITIONALLY, WITHIN 7 DAYS, SLOPES STEEPER THAN 3:1 SHALL BE PROVIDED WITH TEMPORARY OR PERMANENT GROUND COVER, AND SHALL BE PLANTED.

SPECIAL WARRANTY NOTE:

THE CONTRACTOR SHALL BE RESPONSIBLE FOR THE FULL ESTABLISHMENT OF ALL PERMANENT VEGETATION THROUGHOUT THE 365 WARRANTY PERIOD.

VEGETATION PLAN (A3)
NOT TO SCALE CG101

STATE OF NORTH CAROLINA
DEPT. OF TRANSPORTATION
DIVISION OF HIGHWAYS
RALEIGH, N.C.

1-12

ENGLISH STANDARD DRAWING FOR
PRECAST CONCRETE ENDWALL
FOR SINGLE 12" THRU 72" PIPE - 90° SKEW

SHEET 1 OF 1
838.80

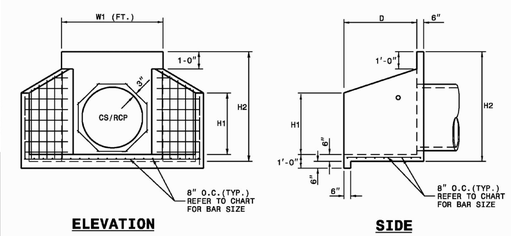

NOTES:

- THIS PRECAST ENDWALL MAY BE USED FOR THE FOLLOWING STANDARDS: 838.01, 838.11, 838.21, 838.27, 838.33, 838.39, 838.51, 838.57, 838.63 AND 838.69.
- INSTALL PRECAST ENDWALLS WITH WINGS AND FAY FOR IN ACCORDANCE WITH SPECIFICATION SECTION 838.
- USE 4000 PSI CONCRETE.
- PROVIDE ALL REINFORCING STEEL WHICH MEETS ASTM A615 FOR GRADE 60 AND WELDED WIRE FABRIC CONFORMING TO ASTM A185 WITH 2" MIN. CLEARANCE.
- PLACE LIFT HOLES OR PINS IN ACCORDANCE WITH OSHA STANDARD 1926.704.
- PIPE TO BE GROUTED INTO HEADWALL AT JOB SITE BY CONTRACTOR
- ALL ELEMENTS PRECAST TO MEET ASTM C913.
- WELDED WIRE FABRIC MAY BE SUBSTITUTED FOR REBAR AS LONG AS THE SAME AREA OF STEEL IS PROVIDED.
- CHAMFER ALL CORNERS 1" OR HAVE A RADIUS OF 1".

NOTE: THE MINIMUM BAR SIZE SHALL BE #5 BARS AT 8" CTS.THE CONTRACTOR WILL HAVE THE OPTION TO INCREASE THIS BAR SIZE AS NEEDED.

ENDWALL DIMENSIONS

FT.	MINIMUM	MIN./MAX.	MIN./MAX.	MIN./MAX.	MIN./MAX.	MIN./MAX.
PIPE DIA.	BAR SIZE	H1(FT.)	H2(FT.)	D (FT.)	W1	W2
1.0	#5 @ 8"	1.25/2.00	2.00/3.75	1.25/1.75	3.00/3.75	5.50/6.00
1.25	#5 @ 8"	1.25/2.00	3.00/3.75	1.25/2.00	3.50/3.75	6.50/6.75
1.50	#5 @ 8"	1.25/2.00	3.00/4.25	1.50/2.50	3.50/3.75	6.50/6.75
2.0	#5 @ 8"	1.50/2.50	4.00/4.75	1.75/2.50	4.00/4.25	7.50/8.25
2.5	#5 @ 8"	2.50/3.50	4.00/6.00	2.00/3.00	4.50/5.50	10.00/11.50
3.0	#5 @ 8"	3.00/3.50	5.00/6.00	2.75/3.50	5.25/5.75	11.50/11.75
3.5	#5 @ 8"	3.25/4.50	6.00/6.75	3.25/3.50	6.00/6.75	12.00/13.25
4.0	#5 @ 8"	3.50/4.50	6.50/7.00	3.25/3.50	6.50/6.75	13.00/13.25
4.5	#5 @ 8"	4.00/5.00	6.50/8.50	3.25/4.00	7.00/9.25	13.50/15.75
5.0	#5 @ 8"	4.50/5.00	7.00/8.50	3.25/4.00	7.25/9.25	13.75/15.75
5.5	#5 @ 8"	4.50/5.00	7.50/8.50	3.25/4.00	7.25/9.25	14.00/15.75
6.0	#5 @ 8"	4.50/5.00	7.50/8.50	3.25/4.00	7.75/9.25	14.75/16.75

STATE OF NORTH CAROLINA
DEPT. OF TRANSPORTATION
DIVISION OF HIGHWAYS
RALEIGH, N.C.

1-12

ENGLISH STANDARD DRAWING FOR
PRECAST CONCRETE ENDWALL
FOR SINGLE 12" THRU 72" PIPE - 90° SKEW

SHEET 1 OF 1
838.80

ENDWALL (A4)
NOT TO SCALE CG101

AE PROJECT # 15098

AVOLIS ENGINEERING, P.A.
P.O. BOX 15564
NEW BERN, NC 28561
PH.(252) 633-0068, FAX (252) 633-6507
LICENSE NO: C-0706

PHYSICAL & TOPOGRAPHIC SURVEY BY:

GASKINS LAND SURVEYING, P.A.
PROFESSIONAL LAND SURVEYING
C-3023
Phone: 252-244-0599 PO Box 354
Fax: 252-244-5899 Vanceboro, NC 28586

NO.	REVISION DESCRIPTION	DATE	APPR

NAVFAC

NORTH CAROLINA PROFESSIONAL SEAL 15733 2/21/14 JOHN K. AVOLIS ENGINEER

HBA

A/E INFO

APPROVED

FOR COMMANDER NAVFAC
ACTIVITY

SATISFACTORY TO DATE

DES	JKA	DRW	WWF	CHK	JKA

PM
BRANCH MANAGER
CHIEF ENG/ARCH
FIRE PROTECTION

DEPARTMENT OF THE NAVY
NAVAL FACILITIES ENGINEERING COMMAND
NAVAL FACILITIES ENGINEERING COMMAND
NAVAL STATION - NORFOLK, VIRGINIA
NORTH CAROLINA IPT
MCB CAMP LEJEUNE
JACKSONVILLE, NC
P-1475 CULTURAL ASSIMILATION FACILITY
GRADING DETAILS

SCALE: GRAPHIC
EPROJECT NO.: 1386337
CONSTR. CONTR. NO. N40085-10-D-5301
NAVFAC DRAWING NO. 12711885
SHEET 13 OF 81
CG501

DRAWFORM REVISION: 10 MAY 2014

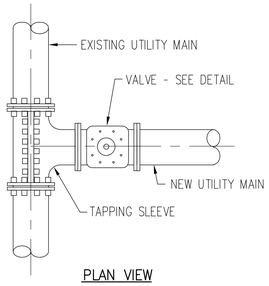

PLAN VIEW

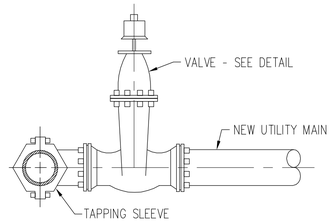

SIDE VIEW

TAPPING SLEEVE (D1)

NOT TO SCALE CU101

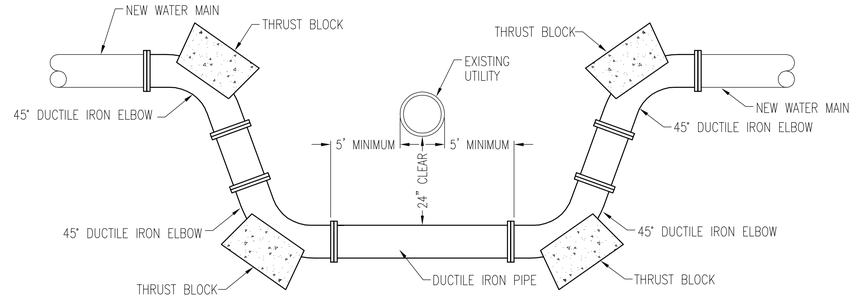

UTILITY CROSSING (C3)

NOT TO SCALE CU101

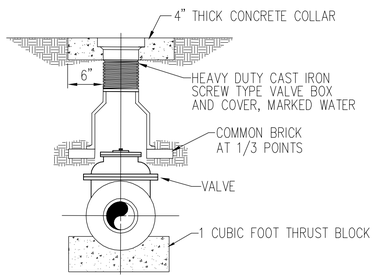

VALVE AND VALVE BOX (C1)

NOT TO SCALE CU101

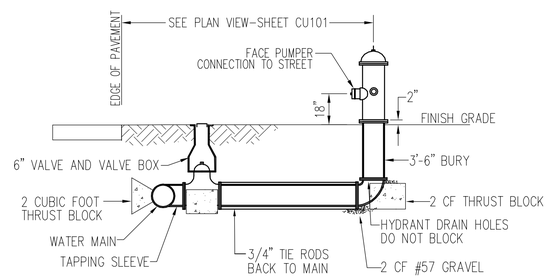

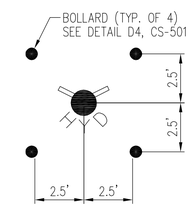

PLAN

FIRE HYDRANT (B3)

NOT TO SCALE CU101

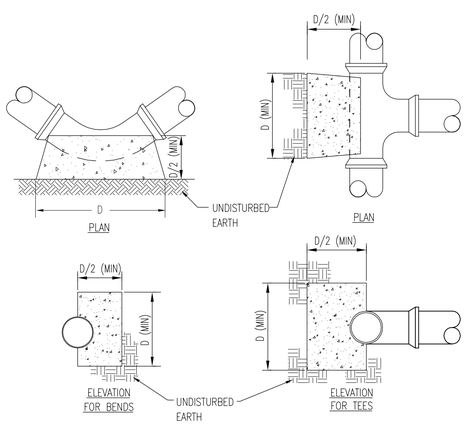

THRUST BLOCK DIMENSION D (IN FEET)					
NOM. PIPE DIA.	DEAD END	90° BEND	45° BEND	22 1/2° BEND	11 1/4° BEND
2"-4"	1.3	1.6	1.2	0.9	0.8
6"	2.1	2.3	1.7	1.2	0.8
8"	2.5	2.8	2.2	1.5	1.0

THRUST BLOCK (A1)

NOT TO SCALE CU101

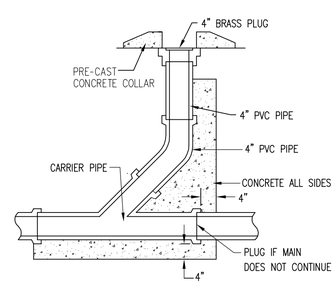

CLEANOUT (A3)

NOT TO SCALE CU101

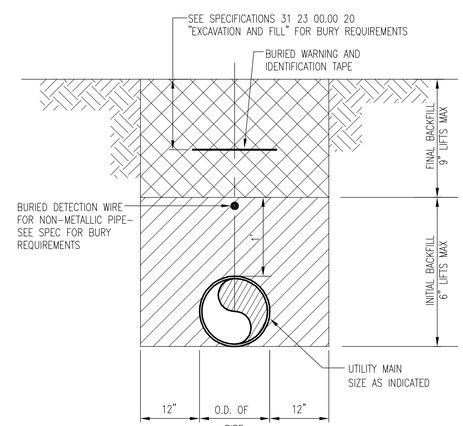

PIPE TRENCH WITHOUT BEDDING

PIPE TRENCH SECTION (A4)

NOT TO SCALE CU101

AE PROJECT # 15098

AVOLIS ENGINEERING, P.A.
P.O. BOX 15564
NEW BERN, NC 28561
PH.(252) 633-0068, FAX (252) 633-6507
LICENSE NO. C-0706

PHYSICAL & TOPOGRAPHIC SURVEY BY:

GASKINS LAND SURVEYING, P.A.
PROFESSIONAL LAND SURVEYING
C-3023
PO Box 354
Vanceboro, NC 28586
Phone: 252-244-0599
Fax: 252-244-5899

NO.	DESCRIPTION	DATE	APPR

NAVFAC

NORTH CAROLINA PROFESSIONAL SEAL 15733 2/3/14 ENGINEER JOHN K. AVOLIS

HBA

APPROVED
FOR COMMANDER NAVFAC
ACTIVITY

SATISFACTORY TO DATE

DES	JKA	DRW	WWF	CHK	JKA

PM
BRANCH MANAGER
CHIEF ENG/ARCH
FIRE PROTECTION

DEPARTMENT OF THE NAVY
NAVAL FACILITIES ENGINEERING COMMAND
NAVAL FACILITIES ENGINEERING COMMAND
NAVAL STATION – NORFOLK, VIRGINIA
NORTH CAROLINA IPT
MCB CAMP LEJEUNE
JACKSONVILLE, NC
P-1475 CULTURAL ASSIMILATION FACILITY
UTILITY DETAILS

SCALE: GRAPHIC
EPROJECT NO.: 1386337
CONSTR. CONTR. NO. N40085-10-D-5301
NAVFAC DRAWING NO. 12711886
SHEET 14 OF 81
CU501

DRAWFORM REVISION: 10 MAY 2014

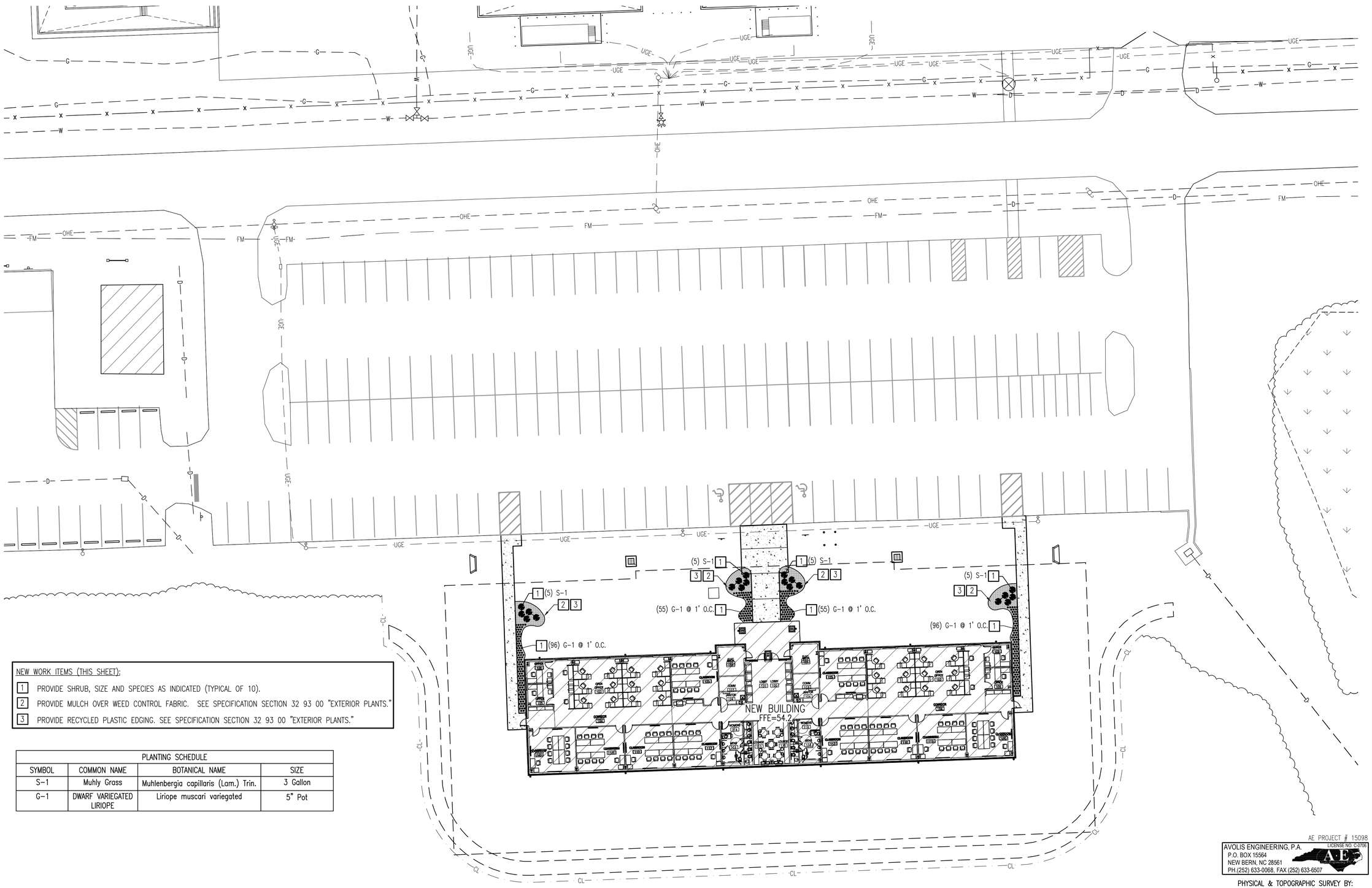

NEW WORK ITEMS (THIS SHEET):

1. PROVIDE SHRUB, SIZE AND SPECIES AS INDICATED (TYPICAL OF 10).
2. PROVIDE MULCH OVER WEED CONTROL FABRIC. SEE SPECIFICATION SECTION 32 93 00 "EXTERIOR PLANTS."
3. PROVIDE RECYCLED PLASTIC EDGING. SEE SPECIFICATION SECTION 32 93 00 "EXTERIOR PLANTS."

PLANTING SCHEDULE

SYMBOL	COMMON NAME	BOTANICAL NAME	SIZE
S-1	Muhly Grass	Muhlenbergia capillaris (Lam.) Trin.	3 Gallon
G-1	DWARF VARIEGATED LIRIOPE	Liriope muscari variegated	5" Pot

SITE LANDSCAPING PLAN

SCALE 1"=20'

PLAN NORTH

GRAPHIC SCALE: 1" = 20'

AE PROJECT # 15098

AVOLIS ENGINEERING, P.A.
LICENSE NO. C-0706
P.O. BOX 15564
NEW BERN, NC 28561
PH.(252) 633-0068, FAX (252) 633-6507

PHYSICAL & TOPOGRAPHIC SURVEY BY:

GASKINS LAND SURVEYING, P.A.
PROFESSIONAL LAND SURVEYING
C-3023
Phone: 252-244-0599
Fax: 252-244-5899
PO Box 354
Vanceboro, NC 28586

NORTH CAROLINA PROFESSIONAL SEAL 15733 ENGINEER JOHN K. AVOLIS

APPROVED

FOR COMMANDER NAVFAC

ACTIVITY

SATISFACTORY TO DATE

DES	JKA	DRW	WWF	CHK	JKA

PM

BRANCH MANAGER

CHIEF ENG/ARCH

FIRE PROTECTION

DEPARTMENT OF THE NAVY — NAVAL FACILITIES ENGINEERING COMMAND

NAVAL FACILITIES ENGINEERING COMMAND — NAVAL STATION – NORFOLK, VIRGINIA

NORTH CAROLINA IPT — MCB CAMP LEJEUNE — JACKSONVILLE, NC

P-1475 CULTURAL ASSIMILATION FACILITY

SITE LANDSCAPING PLAN

SCALE:	GRAPHIC
EPROJECT NO.:	1386337
CONSTR. CONTR. NO.	N40085-10-D-5301
NAVFAC DRAWING NO.	12711887
SHEET	15 OF 81
	LS101

DRAWFORM REVISION: 10 MAY 2014

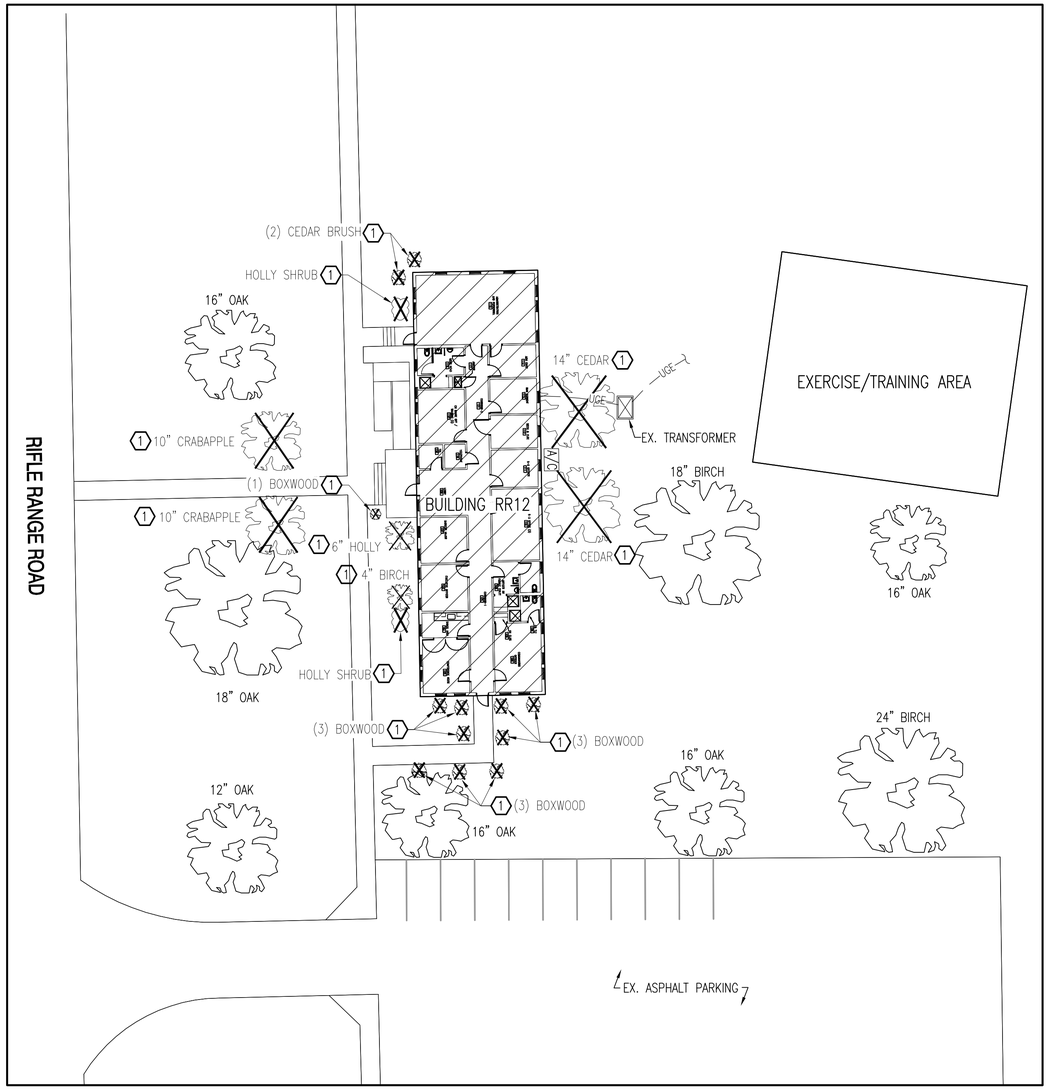

SITE PLAN – EXISTING CONDTIONS & DEMOLTION

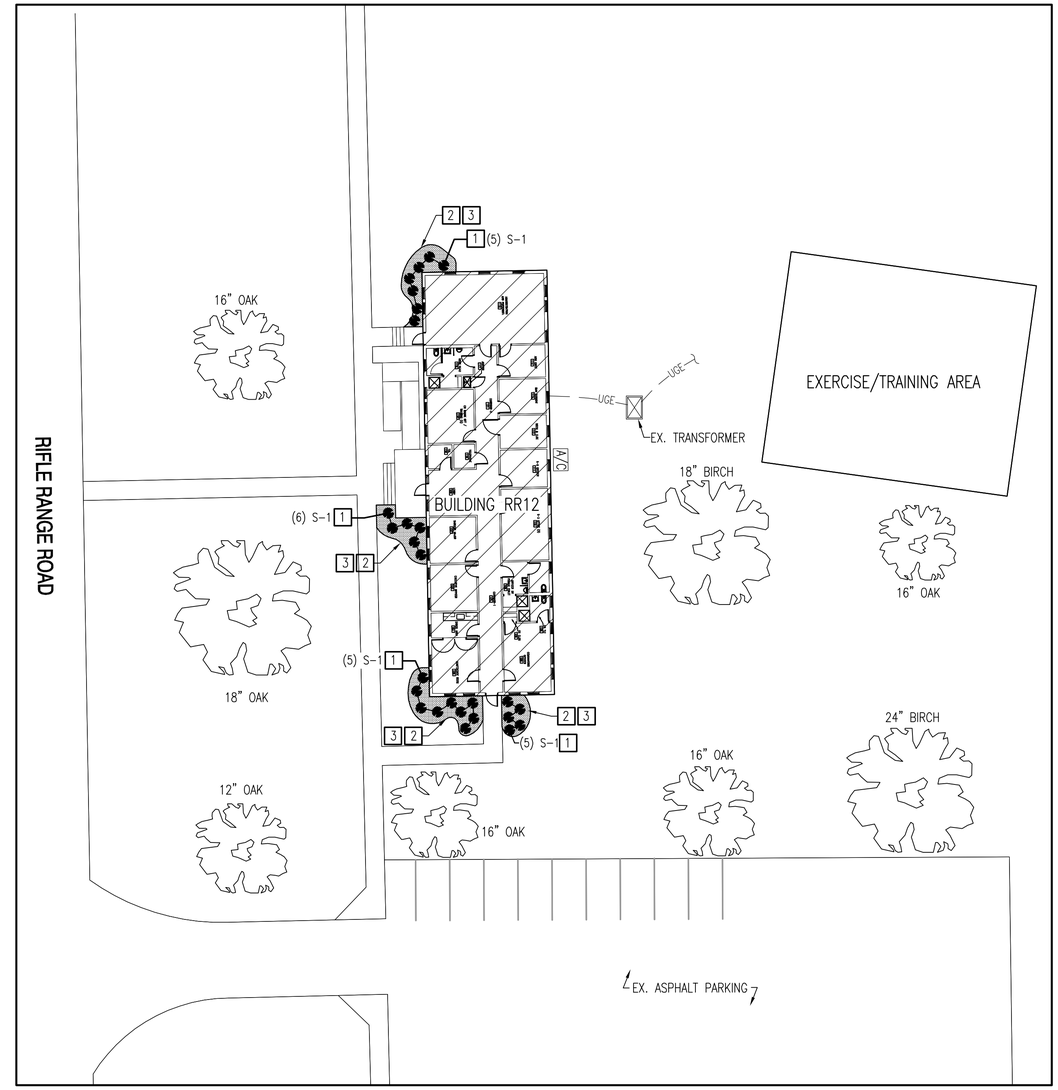

SITE PLAN – NEW WORK

DEMOLITION WORK ITEMS (THIS SHEET):

1 EXISTING TREE/SHRUB TO BE REMOVED.

NEW WORK ITEMS (THIS SHEET):

1 PROVIDE SHRUB, SIZE AND SPECIES AS INDICATED (TYPICAL OF 10).

2 PROVIDE MULCH OVER WEED CONTROL FABRIC. SEE SPECIFICATION SECTION 32 93 00 "EXTERIOR PLANTS."

3 PROVIDE RECYCLED PLASTIC EDGING. SEE SPECIFICATION SECTION 32 93 00 "EXTERIOR PLANTS."

PLANTING SCHEDULE

SYMBOL	COMMON NAME	BOTANICAL NAME	SIZE
S-1	Muhly Grass	Muhlenbergia capillaris (Lam.) Trin.	3 Gallon

BUILDING RR12 - BID OPTION

SCALE 1"=20'

PLAN NORTH

20 0 10 20 40

GRAPHIC SCALE: 1" = 20'

AE PROJECT # 15098

AVOLIS ENGINEERING, P.A.
LICENSE NO. C-0706
P.O. BOX 15564
NEW BERN, NC 28561
PH.(252) 633-0068, FAX (252) 633-6507

PHYSICAL & TOPOGRAPHIC SURVEY BY:

GASKINS LAND SURVEYING, P.A.
PROFESSIONAL LAND SURVEYING
C-3023
PO Box 354
Vanceboro, NC 28586
Phone: 252-244-0599
Fax: 252-244-5899

NAVFAC

NORTH CAROLINA PROFESSIONAL SEAL 15733 ENGINEER JOHN K. AVOLIS

HBA

APPROVED

FOR COMMANDER NAVFAC

ACTIVITY

SATISFACTORY TO DATE

DES	JKA	DRW	WWF	CHK	JKA

PM

BRANCH MANAGER

CHIEF ENG/ARCH

FIRE PROTECTION

DEPARTMENT OF THE NAVY
NAVAL FACILITIES ENGINEERING COMMAND
NAVAL FACILITIES ENGINEERING COMMAND
NAVAL STATION – NORFOLK, VIRGINIA
NORTH CAROLINA IPT
MCB CAMP LEJEUNE
JACKSONVILLE, NC

P-1475 CULTURAL ASSIMILATION FACILITY

BUILDING RR12 LANDSCAPING – BID OPTION

SCALE: GRAPHIC

EPROJECT NO.: 1386337

CONSTR. CONTR. NO. N40085-10-D-5301

NAVFAC DRAWING NO. 12711888

SHEET 16 OF 81

LS701

DRAWFORM REVISION: 10 MAY 2014

GENERAL CONSTRUCTION NOTES:

1. THE LOCATION AND DEPTHS OF EXISTING UTILITIES SHOWN ARE APPROXIMATE. THE CONTRACTOR SHALL BE RESPONSIBLE FOR SCANNING THE AREA OF WORK TO IDENTIFY TO HIS OWN SATISFACTION THE EXTENT OF UTILITIES PRESENT INCLUDING THE UTILITIES INDICATED TO BE PRESENT, THOSE NOT SHOWN, AND THOSE SHOWN TO BE IN A DIFFERENT LOCATION.
2. PHYSICAL SITE FEATURES OUTSIDE THE AREA OF WORK OR THOSE FEATURES NOT RELEVANT TO THE WORK BEING PERFORMED ARE NOT SHOWN FOR CLARITY.
3. GRADE EVENLY BETWEEN SPOT ELEVATIONS SHOWN.

GENERAL REQUIREMENTS

1. ALL DISTURBED AREAS SHALL BE VEGETATED IN ACCORDANCE WITH THE PROJECT VEGETATION PLAN. SEE DETAIL A3, SHEET CG501.
2. COMPLETE ALL TRENCHING IN ACCORDANCE WITH DETAIL A4, SHEET CU501.

NEW WORK ITEMS (THIS SHEET):

1 NEW ASPHALT JOGGING TRAIL – SEE DETAIL C1 AND C3, THIS SHEET.

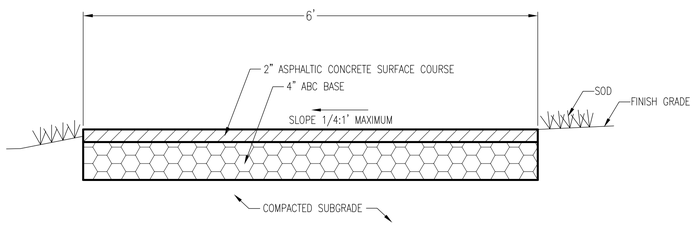

JOGGING TRAIL
NOT TO SCALE CS702 (C1)

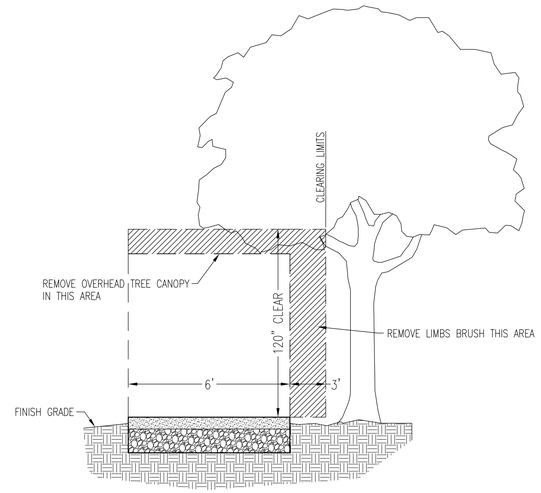

OVERHEAD PRUNING @ JOGGING TRAIL
NOT TO SCALE CS702 (C3)

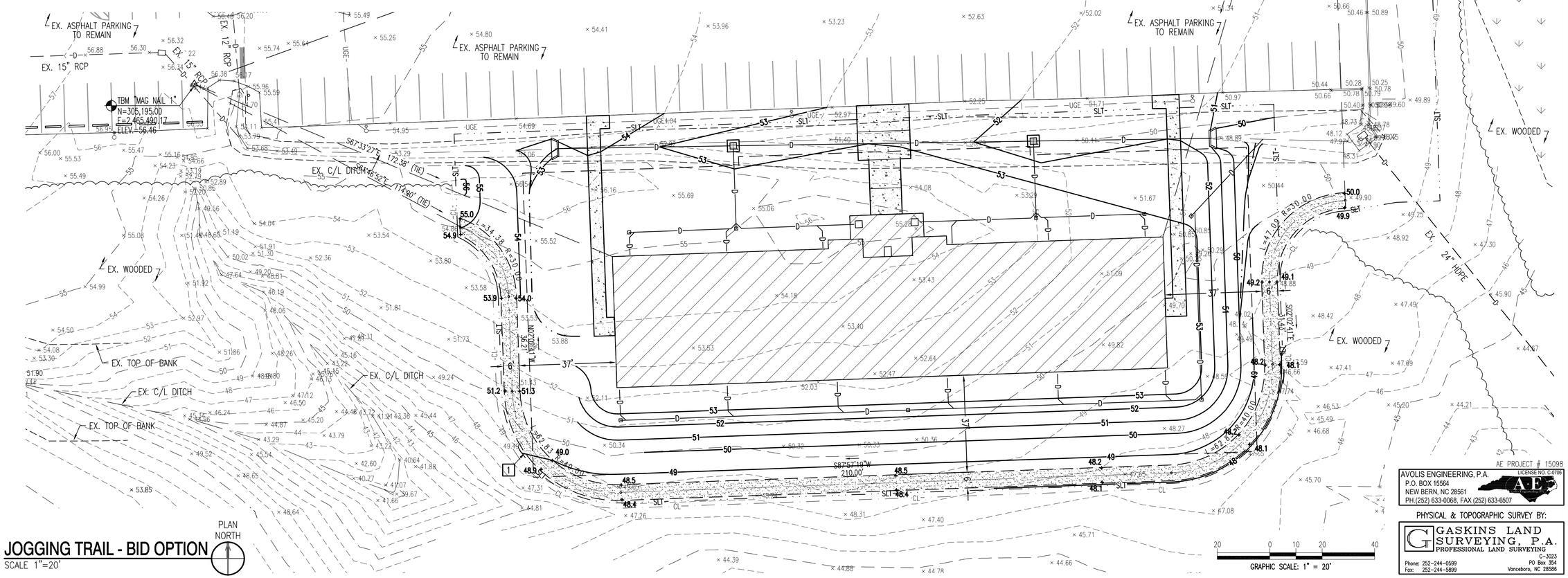

JOGGING TRAIL - BID OPTION
SCALE 1"=20'

PLAN NORTH

AE PROJECT # 15098

AVOLIS ENGINEERING, P.A.
P.O. BOX 15564
NEW BERN, NC 28561
PH.(252) 633-0068, FAX (252) 633-6507
LICENSE NO. C-0706

PHYSICAL & TOPOGRAPHIC SURVEY BY:
GASKINS LAND SURVEYING, P.A.
PROFESSIONAL LAND SURVEYING
Phone: 252-244-0599 Fax: 252-244-5899
C-3023 PO Box 354 Vanceboro, NC 28586

DEPARTMENT OF THE NAVY	NAVAL FACILITIES ENGINEERING COMMAND
NORTH CAROLINA IPT	NAVAL FACILITIES ENGINEERING COMMAND, NAVAL STATION – NORFOLK, VIRGINIA
MCB CAMP LEJEUNE	JACKSONVILLE, NC
P-1475 CULTURAL ASSIMILATION FACILITY	
JOGGING TRAIL – BID OPTION	

SCALE: GRAPHIC
EPROJECT NO.: 1386337
CONSTR. CONTR. NO. N40085-10-D-5301
NAVFAC DRAWING NO. 12711889
SHEET 17 OF 81
CS701

APPROVED
FOR COMMANDER NAVFAC
ACTIVITY
SATISFACTORY TO DATE
DES. JKA DRW WWF CHK JKA
PM
BRANCH MANAGER
CHIEF ENG/ARCH
FIRE PROTECTION

GENERAL STRUCTURAL NOTES:

1. COORDINATE AND VERIFY ALL DIMENSIONAL INFORMATION WITH THE ARCHITECTURAL DRAWINGS INCLUDING OTHER DISCIPLINES PRIOR TO STARTING CONSTRUCTION. THE CONTRACTOR SHALL VERIFY ALL CONDITIONS PERTAINING TO EXISTING UTILITIES BEFORE PROCEEDING WITH THE WORK. ANY OMISSIONS OR DISCREPANCIES SHALL BE BROUGHT TO THE ATTENTION OF THE CONTRACTING OFFICER.

2. THE STRUCTURAL DRAWINGS SHALL BE USED IN CONJUNCTION WITH THE ARCHITECTURAL, CIVIL, MECHANICAL, ELECTRICAL, PLUMBING, AND FIRE PROTECTION DRAWINGS (IF APPLICABLE) INCLUDING THE SPECIFICATIONS THAT COMPRISES THE COMPLETE DOCUMENT SET FOR THIS PROJECT. VERIFY THE REQUIREMENTS OF OTHER TRADES AS TO SLEEVES, CHASES, ANCHORS, INSERTS, HANGERS, HOLES, AND ANY ADDITIONAL ITEMS TO BE PLACED WITHIN THE STRUCTURAL WORK.

3. PROVIDE ALL TEMPORARY SHORING AND BRACING REQUIRED TO ERECT AND HOLD THE STRUCTURE IN PROPER ALIGNMENT UNTIL ALL STRUCTURAL WORK AND CONNECTIONS HAVE BEEN COMPLETED. THE ARCHITECT/ENGINEER SHALL ARE NOT BE RESPONSIBLE FOR THE DESIGN, SEQUENCES, OR PROCEDURES TO PERFORM THIS WORK.

4. EQUIPMENT WEIGHTS, OPENINGS, AND LOCATIONS INCLUDING STRUCTURAL ELEMENTS ARE INDICATED FOR INFORMATIONAL PURPOSES ONLY. VERIFY AND COORDINATE THE SIZES, WEIGHTS, AND LOCATIONS INDICATED. THE CONTRACTOR SHALL REPORT ANY DISCREPENCIES TO THE CONTRACTING OFFICER.

5. THE REFERENCE DATUM (ELEVATION = 0'-0") FOR ELEVATIONS SHOWN ON THESE DRAWINGS SHALL BE FINISHED FIRST FLOOR ELEVATION. ACTUAL FINISHED FLOOR ELEVATION IS +54.2. REFER TO CIVIL DRAWINGS FOR ADDITIONAL INFORMATION.

6. WHERE A SECTION OR DETAIL IS SHOWN FOR ONE CONDITION, IT SHALL APPLY TO ALL LIKE AND SIMILAR CONDITIONS.

7. UNDER NO CIRCUMSTANCES SHALL THE CONTRACT DRAWINGS BE REPRODUCED, IN PART OR IN WHOLE, TO BE USED AS SHOP DRAWINGS WITHOUT WRITTEN APPROVAL FROM THE CONTRACTING OFFICER.

8. ALL LOADS AND REACTIONS ON DRAWINGS AND IN THESE GENERAL STRUCTURAL NOTES ARE UNFACTORED SERVICE LOADS UNLESS OTHERWISE NOTED. LOAD CASES WHICH INCLUDE COMBINED LOADS SHALL BE CALCULATED IN ACCORDANCE WITH THE INTERNATIONAL BUILDING CODE (IBC).

9. ALL ITEMS SHOWN ON THESE DRAWINGS ARE NEW CONSTRUCTION, UNLESS OTHERWISE NOTED AS EXISTING.

10. ALL DIMENSIONAL UNITS ON THE DRAWINGS AND IN THESE GENERAL STRUCTURAL NOTES ARE FEET (') AND INCHES (") EXCEPT AS INDICATED.

11. IN ACCORDANCE WITH THE IBC, SPECIAL INSPECTIONS WILL BE REQUIRED FOR THIS PROJECT. SPECIAL INSPECTIONS SHALL BE PERFORMED IN ACCORDANCE WITH THE SCHEDULE OF SPECIAL INSPECTIONS. NOTIFY THE SPECIAL INSPECTOR AT LEAST 24 HOURS IN ADVANCE FOR WORK THAT WILL REQUIRE INSPECTION OR TESTING.

DESIGN CODES AND GOVERNING STANDARDS:

1. UNIFIED FACILITIES CRITERIA:
   - A. UFC 1-200-01 GENERAL BUILDING REQUIREMENTS .
   - B. FC 1-300-09N NAVY AND MARINE CORPS DESIGN PROCEDURES .
   - C. UFC 3-301-01 STRUCTURAL ENGINEERING .
   - D. UFC 3-310-04 SEISMIC DESIGN OF BUILDINGS .
   - E. UFC 4-010-01 DoD MINIMUM ANTITERRORISM STANDARDS FOR BUILDINGS .
   - F. UFC 4-010-02 DoD MINIMUM ANTITERRORISM STANDOFF DISTANCES FOR BUILDINGS .

2. 2012 EDITION OF THE INTERNATIONAL BUILDING CODE (IBC).

3. 2010 EDITION OF THE AMERICAN SOCIETY OF CIVIL ENGINEERS/STRUCTURAL ENGINEERS INSTITUTE (ASCE/SEI): ASCE/SEI 7-10, MINIMUM DESIGN LOADS FOR BUILDINGS AND OTHER STRUCTURES .

4. 2011 EDITION OF THE AMERICAN CONCRETE INSTITUTE (ACI): ACI 318-11, BUILDING CODE REQUIREMENTS FOR STRUCTURAL CONCRETE .

5. 2010 EDITION OF THE AMERICAN INSTITUTE OF STEEL CONSTRUCTION (AISC): AISC 360-10, SPECIFICATION FOR STRUCTURAL STEEL BUILDINGS .

6. 2007 EDITION OF THE AMERICAN IRON AND STEEL INSTITUTE (AISI): AISI S100-07/SI-10, NORTH AMERICAN SPECIFICATION FOR THE DESIGN OF COLD-FORMED STEEL STRUCTURAL MEMBERS, WITH SUPPLEMENT 1 DATED 2010 .

7. 1998 EDITION OF THE AMERICAN WELDING SOCIETY (AWS), D1.1 STRUCTURAL WELDING CODE - STEEL, D1.3 STRUCTURAL WELDING CODE - SHEET STEEL AND D1.4 STRUCTURAL WELDING CODE REINFORCING STEEL.

DESIGN LOADS:

THE FOLLOWING LOADS IN ADDITION TO THE DEAD LOADS OF THE PERMANENT CONSTRUCTION BUILDING MATERIALS WERE USED:

FLOOR LIVE LOAD(S):
- FIRST FLOOR LIVE LOAD : 100 PSF
- STORAGE AREA : 125 PSF

ROOF LIVE LOAD:
- MINIMUM ROOF LOAD : 20 PSF

ROOF SNOW LOAD DATA:
- GROUND SNOW LOAD, Pg : 10 PSF
- RAIN ON SNOW SURCHARGE : 5 PSF

WIND DESIGN DATA:
- ULTIMATE DESIGN WIND SPEED, Vult (3 SECOND GUST) : 140 MPH
- NOMINAL DESIGN WIND SPEED, Vasd : 108 MPH
- RISK CATEGORY : II
- WIND EXPOSURE : C
- INTERNAL PRESSURE COEFFICIENT : +/-0.18

EARTHQUAKE DESIGN DATA:
- RISK CATEGORY : II
- SEISMIC IMPORTANCE FACTOR, Ie : 1.0
- MAPPED SPECTRAL RESPONSE ACCELERATION PARAMETERS
  - SHORT PERIODS, Ss : 0.15g
  - 1-SECOND PERIOD, S1 : 0.07g
- SITE CLASS : D
- DESIGN SPECTRAL RESPONSE ACCLERATION PARAMETERS
  - SHORT PERIODS, SDS : 0.157g
  - 1-SECOND PERIOD, SD1 : 0.112g
- SEISMIC DESIGN CATEGORY : B
- BASIC SEISMIC FORCE-RESISTING SYSTEM(S) : STEEL SYSTEMS NOT SPECIFICALLY DETAILED FOR SEISMIC RESISTANCE
- DESIGN BASE SHEAR(S) : 3.5 KIPS
- SEISMIC RESPONSE COEFFICIENT(S), Cs : 0.053
- RESPONSE MODIFICATION COEFFICIENT(S), R : 3
- ANALYSIS PROCEDURE USED : EQUIVALENT LATERAL FORCE

ANTI-TERRORISM FORCE PROTECTION
- LEVEL OF PROTECTION : LOW
- OCCUPANCY : PRIMARY GATHERING
- CHARGE WEIGHT : II
- STAND OFF DISTRIBUTION : 54 FEET MIN.

FOUNDATION NOTES:

1. THE FOUNDATIONS WERE DESIGNED FOR A MAXIMUM ALLOWABLE NET SOIL BEARING PRESSURE OF 2,000 PSF PER (*GEO ENVIRONMENTAL RESOURCES, INC. DATED NOVEMBER 24, 2015.*) THE SOILS BENEATH THE PROPOSED FOOTINGS SHALL BE CAPABLE OF SAFELY SUPPORTING THIS LOAD WITHOUT EXCESSIVE SETTLEMENT. ANY UNUSUAL SOIL CONDITIONS SHALL BE BROUGHT TO THE ATTENTION OF THE CONTRACTING OFFICER. PREPARATION OF SOILS BELOW BUILDING FOUNDATIONS AND SLABS-ON-GRADE SHALL BE IN ACCORDANCE WITH THE RECOMMENDATIONS IN THE GEOTECHNICAL REPORT.

2. ELEVATIONS TO TOP OF ALL FOOTINGS ARE INDICATED ON THE FOUNDATION PLAN. FOOTINGS SHALL BE LOWERED, IF APPROVED BY THE CONTRACTING OFFICER, TO OBTAIN THE DESIGN BEARING PRESSURE. CONTRACTOR SHALL REVIEW THE GEOTECHNICAL REPORT (IF APPLICABLE) PRIOR TO STARTING FOUNDATION CONSTRUCTION.

3. EARTH FORMED FOOTINGS SHALL CONFORM TO THE SHAPE, LINES, AND DIMENSIONS AS SHOWN ON THE FOUNDATION PLAN. BEFORE PLACING CONCRETE, ALL EMBEDDED ITEMS SHALL BE PROPERLY PLACED, ACCURATELY POSITIONED, AND MAINTAINED SECURELY IN PLACE.

4. THE CONTRACTOR SHALL TAKE ALL PRECAUTIONS NECESSARY TO PREVENT WATER FROM ENTERING FOUNDATION EXCAVATIONS. ALL WATER SHALL BE REMOVED PRIOR TO PLACING CONCRETE. CONCRETE SHALL NOT BE PLACED ON SOFT, SATURATED SOIL.

5. COLUMN FOOTINGS SHALL BE CENTERED ON THE COLUMNS, UNLESS OTHERWISE NOTED.

6. PRIOR TO ANY EXCAVATION OPERATIONS, THE CONTRACTOR IS RESPONSIBLE FOR LOCATING ALL UNDERGROUND UTILITIES OR OTHER SUBSURFACE STRUCTURES WITHIN THE AREA TO BE EXCAVATED.

7. PRIOR TO PLACING FOUNDATION CONCRETE, ALL FOUNDATION EXCAVATIONS SHALL BE INSPECTED BY A GEOTECHNICAL ENGINEER. .

CAST-IN-PLACE CONCRETE NOTES:

1. ALL CONCRETE CONSTRUCTION SHALL BE IN ACCORDANCE WITH ACI 301 "STRUCTURAL CONCRETE FOR BUILDINGS" AND ACI 318/318R "BUILDING CODE REQUIREMENTS FOR REINFORCED CONCRETE. CONCRETE PLACED IN HOT WEATHER SHALL BE PLACED IN ACCORDANCE WITH ACI 305 HOT WEATHER CONCRETING. CONCRETE PLACED IN COLD WEATHER SHALL BE PLACED IN ACCORDANCE WITH ACI 306 COLD WEATHER CONCRETING.

2. CONCRETE PROTECTION FOR REINFORCING STEEL AND OTHER GENERAL REQUIREMENTS OF PLACING AND FABRICATION OF REINFORCING SHALL BE IN ACCORDANCE WITH THE LATEST EDITION OF "THE AMERICAN CONCRETE INSTITUTE BUILDING CODE REQUIREMENTS" (ACI 318).

3. ALL CAST-IN-PLACE CONCRETE SHALL BE NORMAL WEIGHT CONCRETE AND ATTAIN A MINIMUM 28 DAY COMPRESSIVE STRENGTHS (f c) OF 3,500 PSI.

CAST-IN-PLACE CONCRETE NOTES: (CONTUNUED)

4. REINFORCING MATERIALS SHALL BE AS FOLLOWS:
   - A. REINFORCING BARS ASTM A 615, GRADE 60, DEFORMED
   - B. WELDED WIRE REINFORCEMENT ASTM A 185 WELDED STEEL WIRE REINFORCEMENT; PROVIDE FLAT SHEETS ONLY, ROLL TYPE IS PROHIBITED.

5. BEND ALL BARS 24 DIAMETERS AROUND CORNERS ALL BENT BARS SHALL BE SHOP FABRICATED. FIELD BENDING OF REINFORCEMENT IS NOT PERMITTED.

6. PROVIDE 3/4" CHAMFERS ON ALL EXPOSED EDGES OF CONCRETE, UNLESS OTHERWISE NOTED.

7. THE SLUMP OF CAST-IN-PLACE CONCRETE SHALL NOT EXCEED 4 INCHES WITHOUT A HIGH RANGE WATER REDUCING ADMIXTURE. THE SLUMP OF CAST-IN-PLACE CONCRETE WITH THE USE OF A HIGH RANGE WATER REDUCING ADMIXTURE SHALL NOT EXCEED 8 INCHES. ALL CONCRETE EXPOSED TO WEATHER SHALL BE AIR-ENTRAINED 5% TO 7%. ENTRAPPED AIR SHALL NOT EXCEED 3%.

8. ALL REINFORCING STEEL AND EMBEDDED ITEMS SUCH AS ANCHOR BOLTS AND WELD PLATES SHALL BE ACCURATELY PLACED AND HELD SECURELY TO PREVENT DISPLACEMENT DURING THE CONCRETE PLACEMENT. DO NOT WET SET DOWELS, ANCHOR BOLTS, OR OTHER EMBEDDED ITEMS. ALL REINFORCEMENT SHALL BE SUPPORTED ON PLASTIC-PROTECTED WIRE BAR SUPPORTS OR PRECAST CONCRETE BAR SUPPORTS OF GREATER COMPRESSIVE STRENGTH THAN THE CONCRETE, MANUFACTURED IN ACCORDANCE WITH THE CONCRETE REINFORCING STEEL INSTITUTE (CRSI) MANUAL OF STANDARD PRACTICE.

9. DURING THE PLACEMENT OF CONCRETE SLABS, TAKE ALL NECESSARY STEPS TO AVOID PLASTIC SHRINKAGE CRACKS DUE TO WEATHER. WET CURE ALL CONCRETE SLABS. CONVENTIONAL SAWED JOINTS SHALL BE RUN WITHIN 4 TO 12 HOURS AFTER THE CONCRETE HAS BEEN FINISHED.

10. SUBMIT SHOP DRAWINGS, CONCRETE MIX DESIGNS AND TEST REPORTS. THE MIX DESIGN SHALL INCLUDE ALL PROPERTIES OF THE MIX, MATERIALS USED IN THE CONCRETE, AND CONCRETE STRENGTH TESTS. SHOP DRAWINGS FOR CONCRETE REINFORCEMENT SHALL INCLUDE REINFORCING AND WELDED WIRE REINFORCEMENT.

11. UNLESS OTHERWISE NOTED, SPLICES IN TOP REINFORCING SHALL BE MADE AT MID-SPAN BETWEEN SUPPORTS AND SPLICES IN BOTTOM REINFORCING SHALL BE MADE OVER SUPPORTS.

12. WHERE NEW CONCRETE IS PLACED AGAINST EXISTING, INCLUDING RECENTLY PLACED CONCRETE WHICH IS NO LONGER PLASTIC, COAT THE EXISTING CONCRETE SURFACE ABUTTING NEW WITH AN EPOXY BONDING COMPOUND.

13. THE USE OF POST-INSTALLED REINFORCING STEEL AND ANCHOR BOLTS, EITHER WITH ADHESIVE, EPOXY GROUT, AND/OR MECHANICAL SYSTEMS WILL NOT BE PERMITTED, UNLESS OTHERWISE NOTED. THE USE OF POST-INSTALLED SYSTEMS WILL BE CONSIDERED FOR REMEDIAL PURPOSES ONLY, SUBJECT TO APPROVAL BY THE ENGINEER OF RECORD.

STRUCTURAL STEEL NOTES:

1. ALL STRUCTURAL STEEL SHALL BE IN ACCORDANCE WITH THE FOLLOWING SPECIFICATIONS:
   - A. W-SHAPES - ASTM A992 GRADE 50
   - B. MISCELLANEOUS SHAPES, ANGLES, PLATES AND BARS ASTM A36
   - C. BOLTS - ASTM A325
   - D. NUTS ASTM A563
   - E. WASHERS F436
   - F. ANCHOR RODS ASTM F1554, GRADE 36
   - G. WELDING ELECTRODES E70XX

2. DESIGN, FABRICATION, ERECTION, AND ALL OTHER STRUCTURAL STEEL WORK SHALL CONFORM TO THE FOURTEENTH EDITION OF THE MANUAL OF STEEL CONSTRUCTION OF THE AMERICAN INSTITUTE OF STEEL CONSTRUCTION.

3. ALL FIELD BOLTED SHEAR CONNECTIONS SHALL BE BEARING TYPE CONNECTIONS (THREADS INCLUDED IN THE SHEAR PLANE) WITH A MINIMUM OF (2)-3/4 INCH DIAMETER ASTM A325 HIGH STRENGTH BOLTS UNLESS OTHERWISE NOTED.

4. ALL WELDING SHALL BE IN ACCORDANCE WITH AWS D1.1, "STRUCTURAL WELDING CODE - STEEL".

5. HIGH STRENGTH BOLTS SHALL BE COMPRESSIBLE-WASHER-TYPE DIRECT TENSION INDICATORS OR TWIST OFF TYPE TENSION-CONTROL BOLTS CONFORMING TO RCSC, SPECIFICATION FOR STRUCTURAL JOINTS USING HIGH-STRENGTH BOLTS FOR ALL BOLTED CONNECTIONS.

6. ALL HOLES AND CUTS REQUIRED IN STRUCTURAL STEEL MEMBERS SHALL BE SHOWN ON THE SHOP DRAWINGS AND SHALL BE MADE IN THE SHOP. NO HOLES SHALL BE CUT IN THE FIELD WITHOUT THE APPROVAL OF THE CONTRACTING OFFICER. TORCH CUTTING IS NOT PERMITTED.

7. ALL STRUCTURAL STEEL, EXCEPT MEMBERS INDICATED TO BE GALVANIZED, SHALL BE SHOP PRIMED.

8. ALL STRUCTURAL STEEL LOCATED OUTSIDE THE CLIMATE CONDITIONED BUILDING ENVELOPE OR EXPOSED TO WEATHER, INCLUDING STRUCTURAL STEEL SUPPORTS FOR ROOF-MOUNTED EQUIPMENT AND STRUCTURAL STEEL LINTELS IN EXTERIOR WALLS, SHALL BE HOT-DIPPED GALVANIZED, IN ACCORDANCE WITH ASTM A123. GALVANIZE AFTER FABRICATION WHERE PRACTICAL. REPAIR DAMAGED GALVANIZED COATING USING ASTM A780 ZINC-RICH PAINT.

9. STEEL MEMBERS SHALL BE SPLICED ONLY WHERE INDICATED.

10. ALL STRUCTURAL STEEL SHOP DRAWINGS SHALL BE PREPARED UNDER THE DIRECT SUPERVISION OF A REGISTERED PROFESIONAL ENGINEER.

SYM	DESCRIPTION	DATE	APPR

NAVFAC

COMMONWEALTH OF VIRGINIA
ERIC J. AYDAR
Lic. No. 28288
2/05/16
PROFESSIONAL ENGINEER
SEAL

HBA
A/E INFO

APPROVED
FOR COMMANDER NAVFAC
ACTIVITY
SATISFACTORY TO DATE

DES	EJA	DRW	JDD	CHK	EJA

PM
BRANCH MANAGER
CHIEF ENG/ARCH
FIRE PROTECTION

DEPARTMENT OF THE NAVY
NAVAL FACILITIES ENGINEERING COMMAND
NAVAL FACILITIES ENGINEERING COMMAND
NAVAL STATION - NORFOLK, VIRGINIA
NORTH CAROLINA IPT
MCB CAMP LEJEUNE
JACKSONVILLE, NC
P-1475 CULTURAL ASSIMILATION FACILITY
GENERAL NOTES

SCALE:	NONE
EPROJECT NO.:	1386337
CONSTR. CONTR. NO.	N40085-10-D-5301
NAVFAC DRAWING NO.	12711890
SHEET	18 OF 81

S-001

McPHERSON DESIGN GROUP p.c.
STRUCTURAL ENGINEERS
6271 Center Drive, Suite 100
Norfolk, Virginia 23502-4102
Phone (757) 965-2000
Facsimile (757) 965-2001
www.McPhersonDesignGroup.com

DRAWFORM REVISION: 10 MAY 2014

COLD-FORMED METAL FRAMING NOTES:

1. ALL STRUCTURAL PROPERTIES OF LIGHT GAGE METAL FRAMING SHALL BE IN ACCORDANCE WITH AISI "SPECIFICATIONS FOR THE DESIGN OF COLD FORMED STEEL STRUCTURAL MEMBERS" AND WITH THE STEEL STUD MANUFACTERERS ASSOCIATION (SSMA).
2. COLD-FORMED FRAMING MEMBERS SHALL BE DESIGNED FOR LOADS AND DESIGN CRITERIA LISTED IN THE GENERAL NOTES.
3. ALL WELDS SHALL CONFORM TO AWS D1.3 SPECIFICATION FOR WELDING SHEET STEEL IN STRUCTURES. WELDING ELECTRODES SHALL BE IN ACCORDANCE WITH AWS A5.1, A5.5 OR A5.18 SERIES E70. WELDING SHALL BE PERFORMED ONLY BY QUALIFIED WELDERS USING PROPER EQUIPMENT FOR THE PARTICULAR TYPE OF WORK REQUIRED.
4. ALL STRUCTURAL FRAMING MEMBERS 16 GAGE AND HEAVIER SHALL BE IN ACCORDANCE WITH ASTM A653, GRADE D, Fy = 50,000 PSI.
5. ALL STRUCTURAL FRAMING MEMBERS 18 GAGE AND LIGHTER SHALL BE IN ACCORDANCE WITH ASTM A653, GRADE A, Fy = 33,000 PSI.
6. ALL TRACK AND BRIDGING MATERIALS SHALL HAVE Fy = 33,000 PSI MINIMUM.
7. PROVIDE BRIDGING LINES AT 4'-0" MAXIMUM ON CENTER IN ALL WALLS UNLESS OTHERWISE INDICATED. BRIDGING SHALL BE FULLY INSTALLED AND ANCHORED AT ENDS BEFORE SUPERIMPOSING LOADS ONTO THE STUDS.
8. ALL FRAMING MEMBERS SHALL BE GALVANIZED IN ACCORDANCE WITH ASTM A653. PROVIDE G90 COATING IF THE FRAMING MEMBER IS IN CONTACT WITH CONCRETE AT OR NEAR GRADE. PROVIDE G60 IN ALL OTHER APPLICATIONS.
9. CUT ALL FRAMING COMPONENTS TO FIT SQUARELY AGAINST ABUTTING MEMBERS AND HOLD FIRMLY IN POSITION UNTIL PROPERLY FASTENED.
10. ALL PANELS SHALL BE SQUARE AND BRACED AGAINST RACKING.
11. ATTACH TRACK SECURELY TO THE FLOOR AND OVERHEAD STRUCTURE. SEAT STUDS SQUARELY TO THE FLOOR AND OVERHEAD TRACK AND ATTACH SECURELY.
12. COLD-FORMED FRAMING DESIGN IS THE RESPONSIBILITY OF THE CONTRACTOR, UNLESS OTHERWISE NOTED. THE CONTRACTOR SHALL RETAIN A PROFESSIONAL ENGINEER FOR THE FRAMING DESIGN AND PREPARATION OF SHOP DRAWINGS. THE CONTRACTOR'S ENGINEER SHALL SIGN AND SEAL THE COLD-FORMED FRAMING DESIGN CALCULATIONS PRIOR TO SUBMITTING THEM FOR APPROVAL TO THE CONTRACTING OFFICER.
13. THE CONTRACTOR'S ENGINEER SHALL BE RESPONSIBLE FOR THE DESIGN OF THE COLD-FORMED FRAMING CONNECTIONS TO THE CAST-IN-PLACE CONCRETE, REINFORCED MASONRY OR STRUCTURAL STEEL AS APPROPRIATE.
14. WHERE ARCHITECTURAL FEATURES, INCLUDING DOORS, WINDOWS, LOUVERS, ETC., ARE EMBEDDED WITHIN OR ABUT A COLD-FORMED FRAMING SYSTEM, THE CONTRACTOR'S ENGINEER SHALL BE RESPONSIBLE FOR PROVIDING, COLD-FORMED HEADERS, JAMBS, ETC., AS REQUIRED TO SUPPORT THE ARCHITECTURAL FEATURE UNDER THE LOADS SCHEDULED IN THE CONTRACT DOCUMENTS.
15. COLD-FORMED METAL FRAMING WHICH SUPPORTS TILE, MASONRY (INCLUDING BRICK VENEER) OR OTHER BRITTLE FINISH SHALL BE DESIGNED TO NOT EXCEED A LIVE, WIND OR SEISMIC INDUCED DEFLECTION OF SPAN/600.

PRE-ENGINEERED METAL BUILDING SYSTEMS:

1. PRE-ENGINEERED METAL BUILDING SYSTEMS AND COMPONENTS SHALL BE DESIGNED IN ACCORDANCE WITH THE PRE-ENGINEERED METAL BUILDING MANUFACTURERS ASSOCIATION (MBMA) DESIGN PRACTICES MANUAL.
2. SUBMIT SHOP DRAWINGS FOR REVIEW PRIOR TO FABRICATION. SHOP DRAWINGS SHALL INDICATE DESIGN LOADS, FRAME REACTIONS, ANCHOR BOLT SETTINGS, SIDEWALL, ENDWALL AND ROOF FRAMING. SHOP DRAWINGS SHALL BE SIGNED AND SEALED BY A REGISTERED PROFESSIONAL ENGINEER.
3. FOUNDATIONS SHALL NOT BE INSTALLED UNTIL THE FRAME REACTIONS HAVE BEEN SUBMITTED TO THE CONTRACTING OFFICER AND THE FOUNDATION AND ANCHOR BOLT DESIGN HAS BEEN CHECKED AND APPROVED.
4. PRE-ENGINEERED METAL BUILDING SYSTEMS DESIGN LIVE LOADS SHALL BE AS FOLLOWS:
   a. ROOF LIVE LOAD: AS INDICATED IN GENERAL NOTES .
   b. SNOWDRIFT: APPLIED PER IBC 2012 EDITION, BASED ON A GROUND SNOW LOAD OF 10 PSF.
   c. ROOF DEAD LOADS: WEIGHT OF ALL EQUIPMENT INDICATED ON THE DRAWINGS, PLUS WEIGHT OF THE BUILDING, PLUS A COLLATERAL EQUIPMENT WEIGHT OF 5 PSF.
   d. WIND LOAD: AS INDICATED IN GENERAL NOTES .

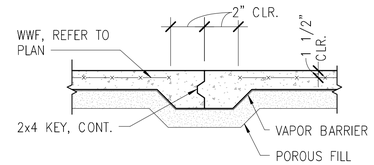

CONSTRUCTION JOINT (C.J.)

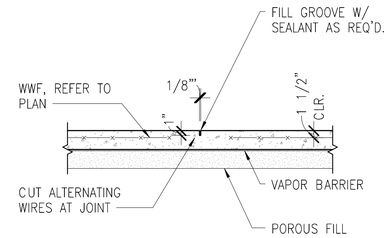

SAWED JOINT (S.J.)

TYPICAL SLAB-ON-GRADE DETAILS

NOT TO SCALE

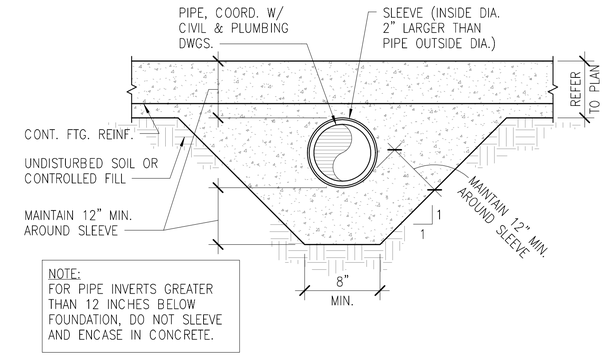

TYPICAL PIPE SLEEVE THRU CONTINUOUS FOOTING DETAIL

NOT TO SCALE

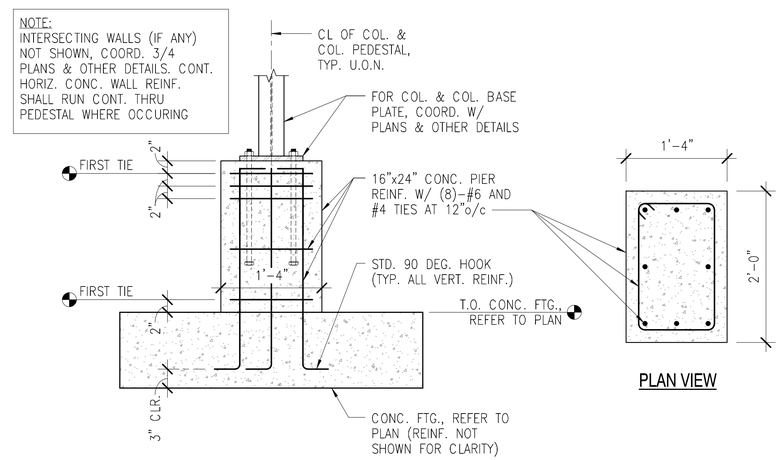

PLAN VIEW

TYPICAL COLUMN PEDESTAL DETAIL

NOT TO SCALE

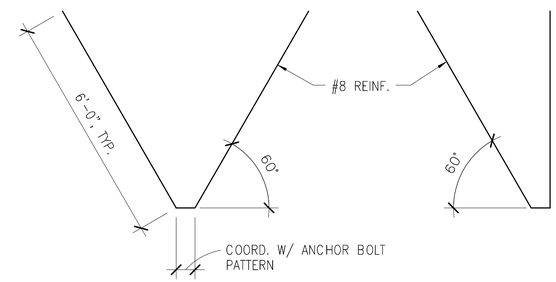

INTERIOR BAY

END BAY

TYPICAL HAIRPIN DETAIL

NOT TO SCALE

McPHERSON DESIGN GROUP p.c.
STRUCTURAL ENGINEERS
6371 Center Drive, Suite 100
Norfolk, Virginia 23502-4102
Phone (757) 965-2000
Facsimile (757) 965-2001
www.McPhersonDesignGroup.com

NO.	DESCRIPTION	DATE	APPR

NAVFAC

COMMONWEALTH OF VIRGINIA
ERIC J. AYMAR
Lic. No. 28288
2/05/14
PROFESSIONAL ENGINEER
SEAL

HBA
A/E INFO

APPROVED
FOR COMMANDER NAVFAC
ACTIVITY
SATISFACTORY TO DATE
DES EJA DRW JDD CHK EJA
PM
BRANCH MANAGER
CHIEF ENG/ARCH
FIRE PROTECTION

DEPARTMENT OF THE NAVY
NAVAL FACILITIES ENGINEERING COMMAND
NAVAL FACILITIES ENGINEERING COMMAND – NORFOLK, VIRGINIA
NAVAL STATION – NORFOLK, VIRGINIA
NORTH CAROLINA IPT
MCB CAMP LEJEUNE
JACKSONVILLE, NC
P-1475 CULTURAL ASSIMILATION FACILITY
GENERAL NOTES

SCALE: NONE
EPROJECT NO.: 1386337
CONSTR. CONTR. NO. N40085-10-D-5301
NAVFAC DRAWING NO. 12711891
SHEET 19 OF 81
S-002

DRAWFORM REVISION: 10 MAY 2014

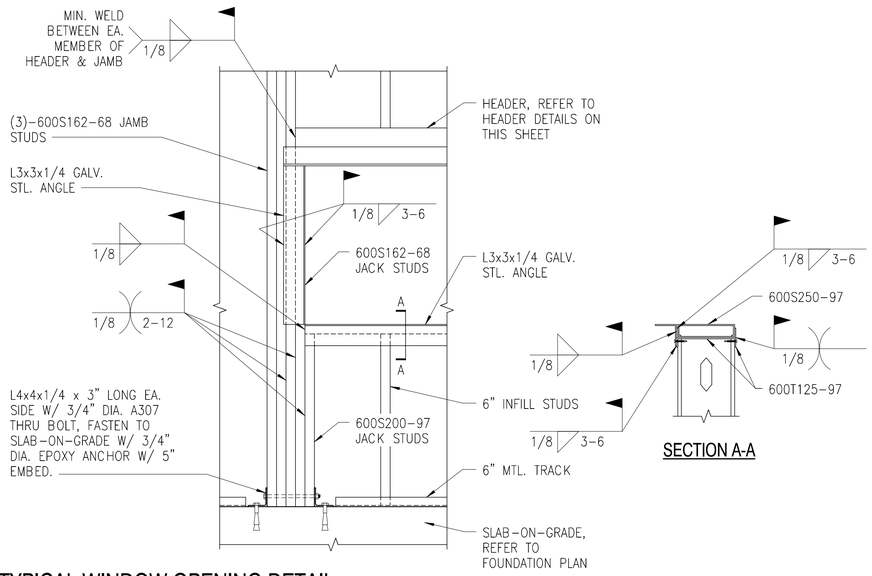

TYPICAL WINDOW OPENING DETAIL

NOT TO SCALE

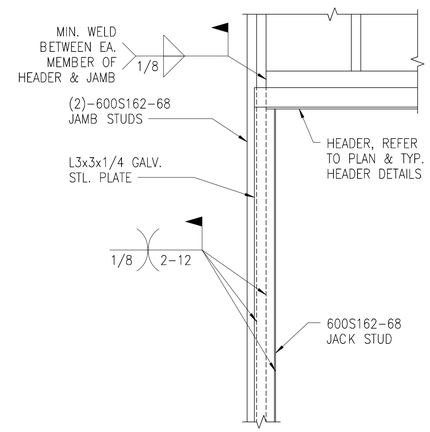

TYPICAL DOOR OPENING DETAIL

NOT TO SCALE

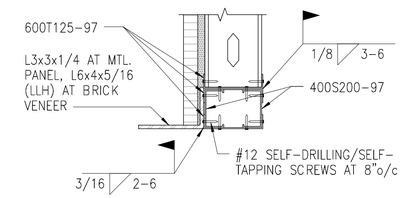

TYPICAL HEADER DETAIL

NOT TO SCALE

NO.	DESCRIPTION	DATE	APPR

NAVFAC

COMMONWEALTH OF VIRGINIA
ERIC J. AYMAR
Lic. No. 28288
2/05/10
PROFESSIONAL ENGINEER
SEAL

HBA
A/E INFO

APPROVED

FOR COMMANDER NAVFAC

ACTIVITY

SATISFACTORY TO DATE

DES	EJA	DRW	JDD	CHK	EJA

PM

BRANCH MANAGER

CHIEF ENG/ARCH

FIRE PROTECTION

DEPARTMENT OF THE NAVY
NAVAL FACILITIES ENGINEERING COMMAND
NAVAL FACILITIES ENGINEERING COMMAND
NAVAL STATION – NORFOLK, VIRGINIA
NORTH CAROLINA IPT
MCB CAMP LEJEUNE
JACKSONVILLE, NC
P-1475 CULTURAL ASSIMILATION FACILITY
TYPICAL DETAILS

SCALE:	NONE
EPROJECT NO.:	1386337
CONSTR. CONTR. NO.	N40085-10-D-5301
NAVFAC DRAWING NO.	12711892
SHEET	20 OF 81

S-003

McPHERSON DESIGN GROUP p.c.
STRUCTURAL ENGINEERS
6271 Center Drive, Suite 100
Norfolk, Virginia 23502-4102
Phone (757) 965-2000
Facsimile (757) 965-2001
www.McPhersonDesignGroup.com

DRAWFORM REVISION: 10 MAY 2014

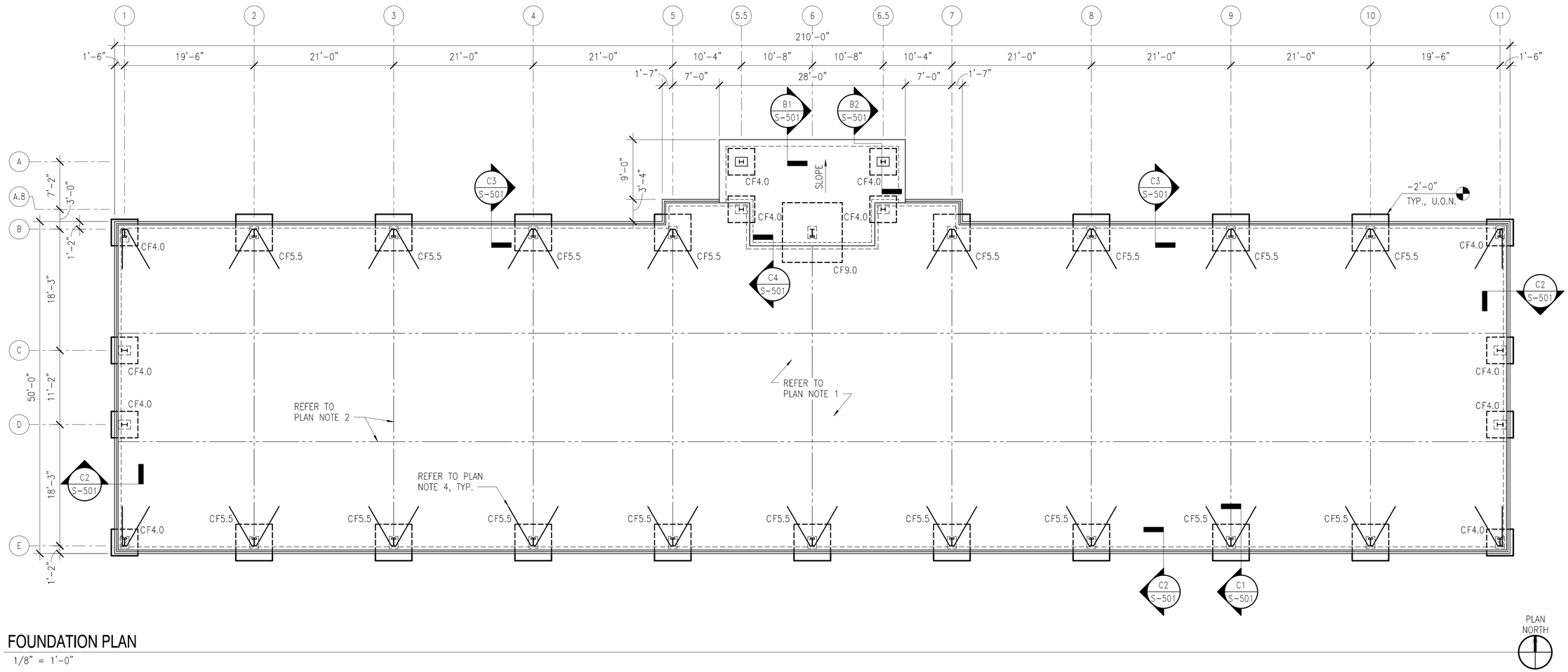

FOUNDATION PLAN

1/8" = 1'-0"

FOUNDATION PLAN NOTES:

1. FIRST FLOOR CONSTRUCTION SHALL BE A 4" CONCRETE SLAB-ON-GRADE REINFORCED WITH ONE LAYER OF 6x6-W2.1xW2.1 WELED WIRE REINFORCING OVER 10 MIL POLYETHYLENE VAPOR BARRIER AND 4" OF POROUS FILL MATERIAL. TOP OF CONCRETE SLAB ELEVATION SHALL BE (0'-0"). COORDINATE UNDER-SLAB INSULATION WITH ARCHITECTURAL DRAWINGS. DO NOT USE VAPOR BARRIER AT EXTERIOR SLABS.
2. — - - — INDICATES FLOOR CONSTRUCTION JOINT (C.J.) OR SAWED JOINT (S.J.). CONTRACTOR SHALL LOCATE C.J. OR S.J. AS REQUIRED BY ACI 318. MAXIMUM GRID SPACING FOR C.J. AND S.J. SHALL BE 15'-0"x15'-0". REFER TO TYPICAL SLAB-ON-GRADE DETAILS ON SHEET S-002.
3. CFX.X DENOTES CONCRETE COLUMN FOOTING, REFER TO FOOTING SCHEDULE ON THIS SHEET FOR SIZE AND REINFORCING.
4. REFER TO SHEET S-002 FOR TYPICAL HAIRPIN DETAIL.

COLUMN FOOTING SCHEDULE

MARK	DIMENSIONS			REINFORCING		REMARKS
	WIDTH	LENGTH	DEPTH	QUANTITY	SIZE	
CF4.0	4'-0"	4'-0"	1'-0"	4	#5	T&B EA. WAY
CF5.5	5'-6"	5'-6"	1'-0"	5	#5	T&B EA. WAY
CF9.0	9'-0"	9'-0"	1'-8"	8	#6	T&B EA. WAY

NOTE:
IF THIS DRAWING IS A REDUCTION, GRAPHIC SCALE MUST BE USED.

GRAPHIC SCALE:

1/8" =1'-0"

0' 4' 8' 16' 32'

McPHERSON DESIGN GROUP p.c.
STRUCTURAL ENGINEERS
6371 Center Drive, Suite 100
Norfolk, Virginia 23502-4102
Phone (757) 965-2000
Facsimile (757) 965-2001
www.McPhersonDesignGroup.com

NO.	DESCRIPTION	DATE	APPR

NAVFAC

COMMONWEALTH OF VIRGINIA
ERIC J. AYMAR
Lic. No. 28288
2/05/14
PROFESSIONAL ENGINEER
SEAL

HBA
A/E INFO

APPROVED
FOR COMMANDER NAVFAC
ACTIVITY

SATISFACTORY TO DATE

DES	EJA	DRW	JDD	CHK	EJA

PM
BRANCH MANAGER
CHIEF ENG/ARCH
FIRE PROTECTION

DEPARTMENT OF THE NAVY
NAVAL FACILITIES ENGINEERING COMMAND
NAVAL FACILITIES ENGINEERING COMMAND
NAVAL STATION - NORFOLK, VIRGINIA
NORTH CAROLINA IPT
MCB CAMP LEJEUNE
JACKSONVILLE, NC
P-1475 CULTURAL ASSIMILATION FACILITY
FOUNDATION PLAN

SCALE: AS NOTED
EPROJECT NO.: 1386337
CONSTR. CONTR. NO. N40085-10-D-5301
NAVFAC DRAWING NO. 12711893
SHEET 21 OF 81
S-101

DRAWFORM REVISION: 10 MAY 2014

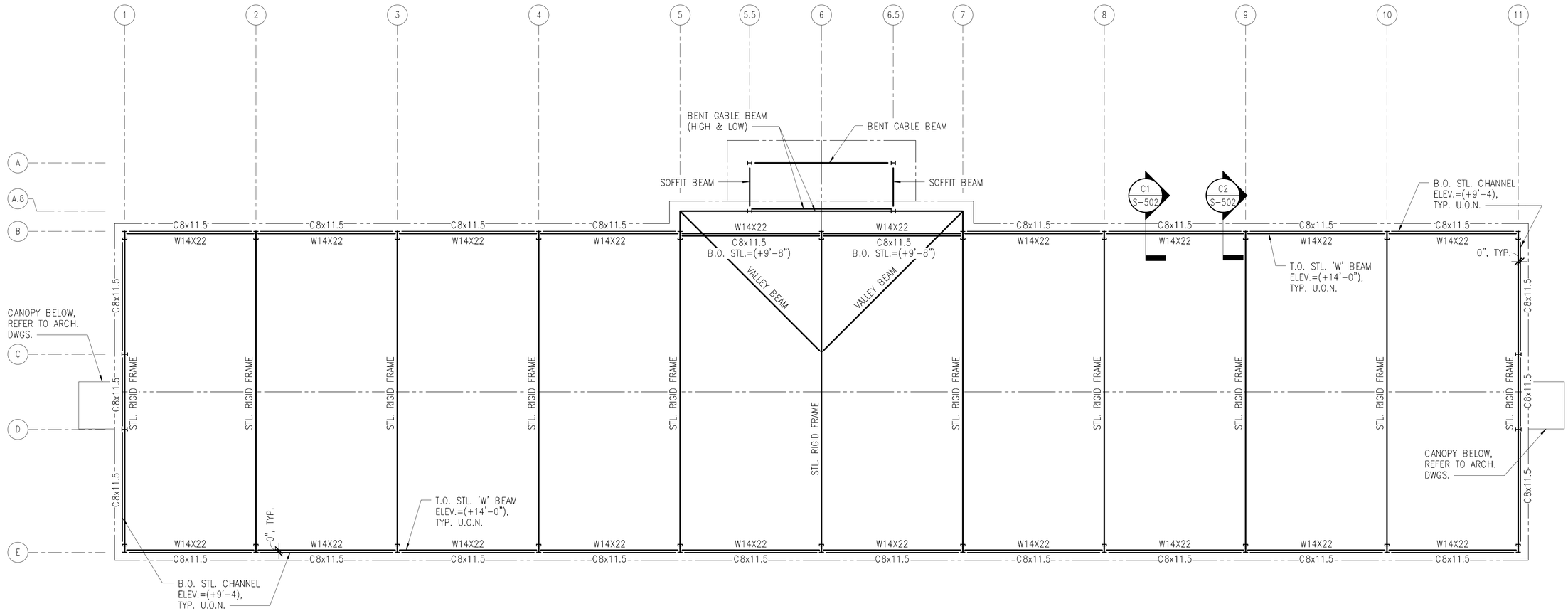

ROOF FRAMING PLAN

1/8" = 1'-0"

PLAN NORTH

ROOF FRAMING PLAN NOTES:

1. REFER TO PRE-ENGINEERED METAL BUILDING DRAWINGS FOR ALL FRAMING MEMBERS NOT NOTED.

NOTE:
IF THIS DRAWING IS A REDUCTION, GRAPHIC SCALE MUST BE USED.

GRAPHIC SCALE:

1/8" =1'-0" 0' 4' 8' 16' 32'

McPHERSON DESIGN GROUP p.c.
STRUCTURAL ENGINEERS
6371 Center Drive, Suite 100
Norfolk, Virginia 23502-4102
Phone (757) 965-2000
Facsimile (757) 965-2001
www.McPhersonDesignGroup.com

NO.	DESCRIPTION	DATE	APPR

NAVFAC

COMMONWEALTH OF VIRGINIA
ERIC J. AYMAR
Lic. No. 28288
2/05/14
PROFESSIONAL ENGINEER
SEAL

HBA
A/E INFO

APPROVED
FOR COMMANDER NAVFAC
ACTIVITY
SATISFACTORY TO DATE
DES EJA DRW JDD CHK EJA
PM
BRANCH MANAGER
CHIEF ENG/ARCH
FIRE PROTECTION

DEPARTMENT OF THE NAVY
NAVAL FACILITIES ENGINEERING COMMAND
NORTH CAROLINA IPT
NAVAL FACILITIES ENGINEERING COMMAND
NAVAL STATION – NORFOLK, VIRGINIA
MCB CAMP LEJEUNE
JACKSONVILLE, NC
P-1475 CULTURAL ASSIMILATION FACILITY
ROOF FRAMING PLAN

SCALE: AS NOTED
EPROJECT NO.: 1386337
CONSTR. CONTR. NO. N40085-10-D-5301
NAVFAC DRAWING NO. 12711894
SHEET 22 OF 81
S-102

DRAWFORM REVISION: 10 MAY 2014

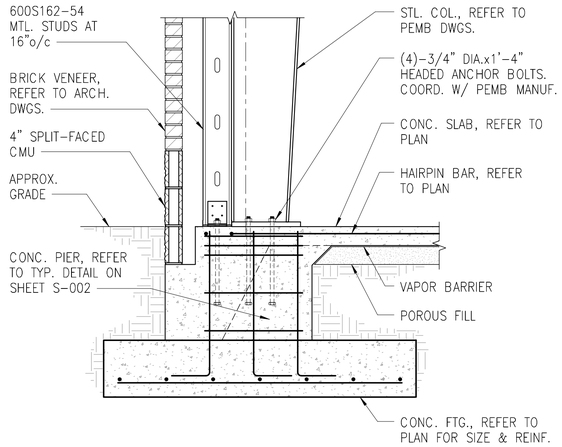

SECTION C1
3/4" = 1'-0" S-101

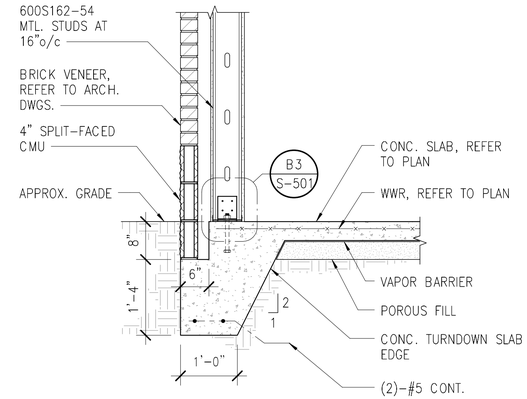

SECTION C2
3/4" = 1'-0" S-101

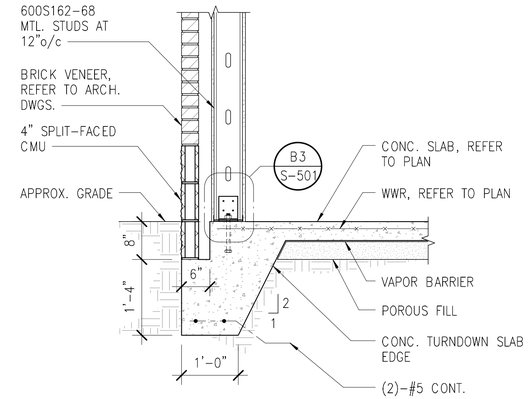

SECTION C3
3/4" = 1'-0" S-101

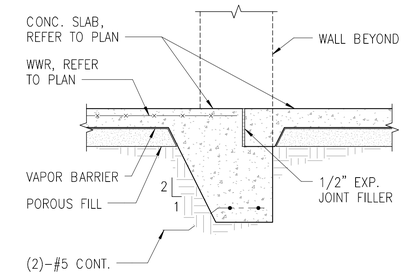

SECTION C4
3/4" = 1'-0" S-101

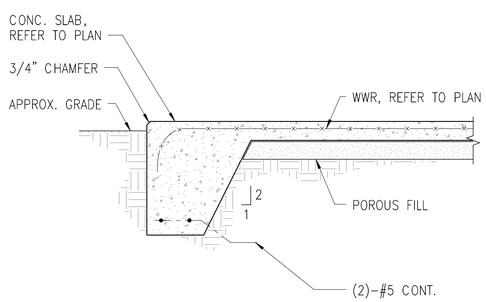

SECTION B1
3/4" = 1'-0" S-101

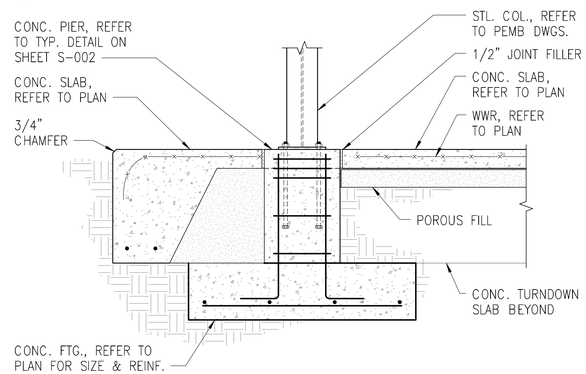

SECTION B2
3/4" = 1'-0" S-101

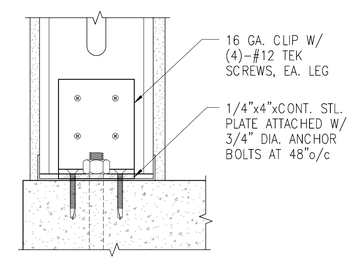

ENLARGED DETAIL B3
3" = 1'-0" S-501

NOTE:
IF THIS DRAWING IS A REDUCTION,
GRAPHIC SCALE MUST BE USED.

GRAPHIC SCALE:

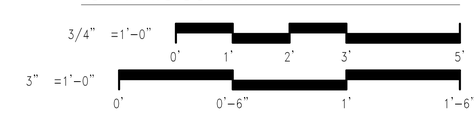

McPHERSON DESIGN GROUP p.c.
STRUCTURAL ENGINEERS
6371 Center Drive, Suite 100
Norfolk, Virginia 23502-4102
Phone (757) 965-2000
Facsimile (757) 965-2001
www.McPhersonDesignGroup.com

NO.	DESCRIPTION	TIM	DATE	APPR

NAVFAC

COMMONWEALTH OF VIRGINIA
ERIC J. AYMAR
Lic. No. 28288
2/05/14
PROFESSIONAL ENGINEER
SEAL

HBA
A/E INFO

APPROVED
FOR COMMANDER NAVFAC
ACTIVITY
SATISFACTORY TO DATE
DES EJA DRW JDD CHK EJA
PM
BRANCH MANAGER
CHIEF ENG/ARCH
FIRE PROTECTION

DEPARTMENT OF THE NAVY
NAVAL FACILITIES ENGINEERING COMMAND
NORFOLK, VIRGINIA
NAVAL FACILITIES ENGINEERING COMMAND
NORTH CAROLINA IPT
NAVAL STATION – NORFOLK, VIRGINIA
MCB CAMP LEJEUNE
JACKSONVILLE, NC
P-1475 CULTURAL ASSIMILATION FACILITY
SECTIONS & DETAILS

SCALE: AS NOTED
EPROJECT NO.: 1386337
CONSTR. CONTR. NO. N40085-10-D-5301
NAVFAC DRAWING NO. 12711895
SHEET 23 OF 81
S-501

DRAWFORM REVISION: 10 MAY 2014

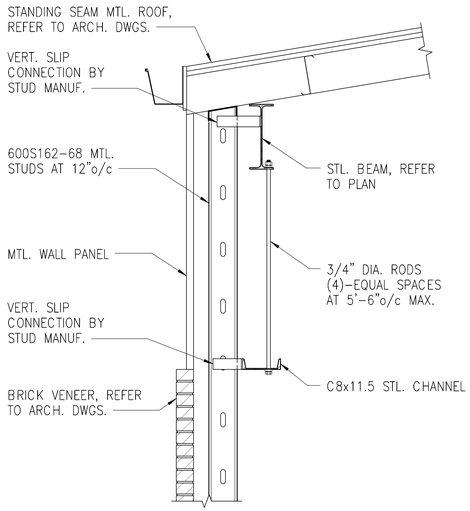

SECTION C1
3/4" = 1'-0"
S-102

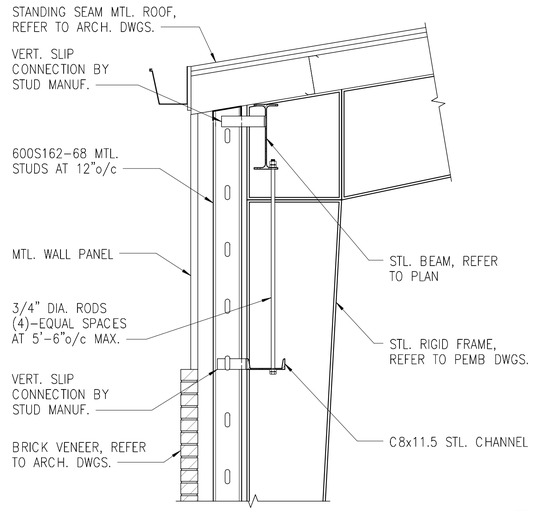

SECTION C2
3/4" = 1'-0"
S-102

NOTE:
IF THIS DRAWING IS A REDUCTION, GRAPHIC SCALE MUST BE USED.

GRAPHIC SCALE:

3/4" =1'-0"

0' 1' 2' 3' 5'

McPHERSON DESIGN GROUP p.c.
STRUCTURAL ENGINEERS
6271 Center Drive, Suite 100
Norfolk, Virginia 23502-4102
Phone (757) 965-2000
Facsimile (757) 965-2001
www.McPhersonDesignGroup.com

NO.	DESCRIPTION	DATE	APPR

NAVFAC

COMMONWEALTH OF VIRGINIA
ERIC J. AYMAR
Lic. No. 28288
2/05/14
PROFESSIONAL ENGINEER
SEAL

HBA
A/E INFO

APPROVED
FOR COMMANDER NAVFAC
ACTIVITY
SATISFACTORY TO DATE

DES	EJA	DRW	JDD	CHK	EJA

PM
BRANCH MANAGER
CHIEF ENG/ARCH
FIRE PROTECTION

DEPARTMENT OF THE NAVY
NAVAL FACILITIES ENGINEERING COMMAND
NAVAL FACILITIES ENGINEERING COMMAND
NAVAL STATION – NORFOLK, VIRGINIA
NORTH CAROLINA IPT
MCB CAMP LEJEUNE
JACKSONVILLE, NC
P-1475 CULTURAL ASSIMILATION FACILITY
SECTIONS & DETAILS

SCALE:	AS NOTED
EPROJECT NO.:	1386337
CONSTR. CONTR. NO.	N40085-10-D-5301
NAVFAC DRAWING NO.	12711896
SHEET	24 OF 81

S-502

DRAWFORM REVISION: 10 MAY 2014

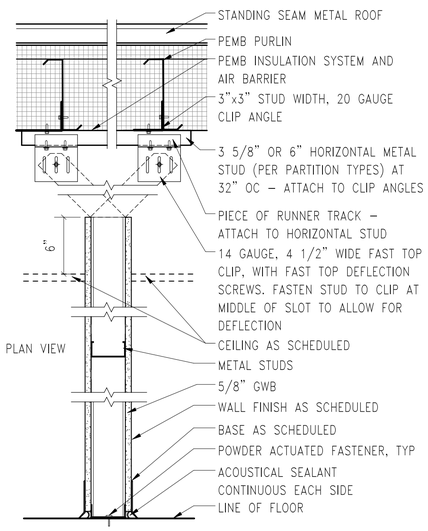

TYPE	WIDTH	STUD SIZE	MAX STUD SPACING	INSUL	STC	UL #	NOTES
A	4 7/8"	3 5/8"	16" OC	3 1/2"	–	–	–
A2	4 1/4"	3 5/8"	16" OC	3 1/2"	–	–	2
A3	4 1/4"	3 5/8"	16" OC	–	–	–	2
A4	6 5/8"	6"	16" OC	–	–	–	2

PARTITION TYPE A A2 A3 A4

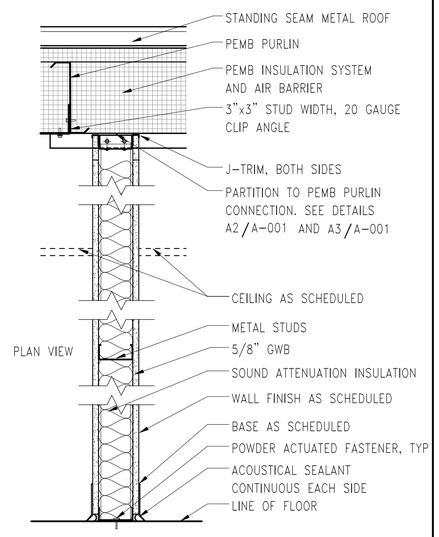

TYPE	WIDTH	STUD SIZE	MAX STUD SPACING	INSUL	STC	UL #	NOTES
B	4 7/8"	3 5/8"	16" OC	3 1/2"	–	–	–
B2	4 1/4"	3 5/8"	16" OC	3 1/2"	–	–	2
B3	4 7/8"	3 5/8"	16" OC	–	–	–	–
B4	7 1/4"	6"	16" OC	3 1/2"	–	–	–

PARTITION TYPE B B2 B3 B4

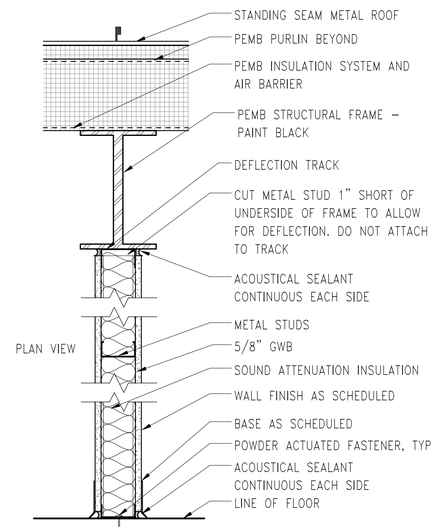

TYPE	WIDTH	STUD SIZE	MAX STUD SPACING	INSUL	STC	UL #	NOTES
C	4 7/8"	3 5/8"	16" OC	3 1/2"	–	–	1

PARTITION TYPE C

GENERAL NOTES

1. VERIFY ALL FIELD CONDITIONS AND DIMENSIONS PRIOR TO BEGINNING CONSTRUCTION AND COORDINATE THE WORK OF ALL TRADES. ALL DISCREPANCIES SHALL BE BROUGHT TO THE IMMEDIATE ATTENTION OF THE CONTRACTING OFFICER, IN WRITING, BEFORE CONTINUING WORK.
2. UNLESS OTHERWISE INDICATED, EXTERIOR DIMENSIONS ARE TO OUTSIDE FACE OF FOUNDATION WALL AND CENTERLINE OR FACE OF STRUCTURAL COLUMNS. INTERIOR DIMENSIONS ARE TO FACE OF STUD AND CENTERLINE OF STRUCTURAL COLUMNS.
3. SEE CIVIL DRAWINGS FOR FINISH FLOOR AND GRADE ELEVATIONS, SIDEWALK, CURBS, ETC.
4. ALL EXPOSED SURFACES AND COMPONENTS ABOVE 9'–4" EXCEPT BLACK LINER FABRIC, LIGHT FIXTURES AND FIRE PROTECTION SYSTEMS – PAINT BLACK.
5. THIS PROJECT INCLUDES A WHOLE BUILDING AIR BARRIER PROVIDED IN THE WALLS BY THE FLUID AIR/WATER BARRIER APPLIED TO THE SHEATHING AND IN THE ROOF PROVIDED BY THE VAPOR BARRIER FABRIC LINER PANEL AS PART OF THE PEMB INSULATION SYSTEM. CARE SHALL BE TAKEN TO PROVIDE A SEAL BETWEEN WALL AND ROOF AIR BARRIER SYSTEMS, PROVIDE TRANSITION MEMBRANES AT ALL DOORS, WINDOWS, LOUVERS, ETC, AND SEAL ALL PENETRATIONS THROUGH THE AIR BARRIER ESPECIALLY IN THE ROOF.

PARTITION TYPE NOTES

1. TOPS OF GWB ON PARTITIONS SHALL BE CUT TO THE PROFILE OF THE PEMB ABOVE AND ALLOW SPACE FOR ACOUSTIC SEALANT.
2. GWB ONE SIDE ONLY

SYMBOL LEGEND

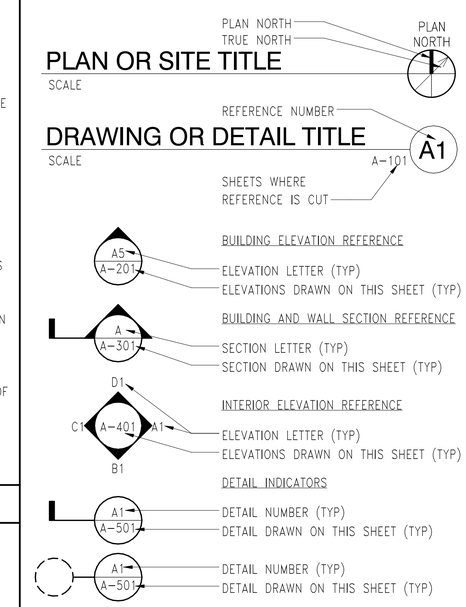

ROOM 101	ROOM NAME AND NUMBER REFERENCE	A	PARTITION TYPE SEE SHEET A–001
101	DOOR NUMBER REFERENCE	1	WORK NOTES
A	WINDOW MARKER SEE SHEET A–503	1	TOILET ACCESSORY NOTE SEE SHEET A–401
(14'–0")	REFERENCE HEIGHT AFF	1	REVISION MARKER
▲	WALL MOUNTED FIRE EXTINGUISHER (NO CABINET)	◄	INTERIOR CONTROL JOINT – SEE A4/A–502
▲	SEMI–RECESSED FIRE EXTINGUISHER CABINET SEE DETAIL B4/A–502		

ABBREVIATIONS

A/C	AIR CONDITIONING	MAX	MAXIMUM
ADA	AMERICANS WITH DISABILITIES	MB	MARKER BOARD
		MECH	MECHANICAL
ACOUS	ACOUSTICAL	MIN	MINIMUM
ACT	ACOUSTICAL CEILING TILE	MO	MASONRY OPENING
AFF	ABOVE FINISHED FLOOR	MTL	METAL
ALUM	ALUMINUM	NIC	NOT IN CONTRACT
APPROX	APPROXIMATELY	NTS	NOT TO SCALE
BD	BOARD	OC	ON CENTER
BLDG	BUILDING	OH	OPPOSITE HAND
BTM	BOTTOM	PEMB	PRE–ENGINEERED METAL BUILDING
CJ	CONTROL JOINT		
CLR	CLEAR	PLAM	PLASTIC LAMINATE
CMU	CONCRETE MASONRY UNIT	PNT	PAINT
		PREFAB	PREFABRICATED
CO	CLEAN OUT	PSI	POUNDS PER SQUARE INCH
CONC	CONCRETE		
CONT	CONTINUOUS	REF	REFRIGERATOR
COORD	COORDINATE	REINF	REINFORCED
D/DIA	DIAMETER	REV	REVERSED
DEMO	DEMOLISH	RO	ROUGH OPENING
DN	DOWN	SIM	SIMILAR
EA	EACH	SQ	SQUARE
EJ	EXPANSION JOINT	SS	STAINLESS STEEL
EQ	EQUAL	STL	STEEL
EQUIP	EQUIPMENT	STRUCT	STRUCTURAL
ETC	ETCETERA	TB	TACK BOARD
EXT	EXTERIOR	TEMP	TEMPORARY
FD	FLOOR DRAIN	TERM	TERMINATE
FDV	FIRE DEPARTMENT VALVE	TGL	TEMPERED GLAZING
FEC	FIRE EXTINGUISHER CABINET	TV	TELEVISION
		TYP	TYPICAL
FRT	FIRE RETARDANT TREATED	UON	UNLESS OTHERWISE NOTED
FRZR	FREEZER		
GA	GAUGE	VERT	VERTICAL
GC	GENERAL CONTRACTOR	VCT	VINYL COMPOSITION TILE
GWB	GYPSUM WALL BOARD	W	WIDTH
GYP	GYPSUM	WD	WOOD
H	HEIGHT	WWF	WELDED WIRE FABRIC
HM	HOLLOW METAL	@	AT
HOR	HORIZONTAL	&	AND
HR	HOUR	℄	CENTER LINE
INSUL	INSULATION	o	DIAMETER
MANUF	MANUFACTURER	#	NUMBER

MATERIAL LEGEND

BATT INSULATION	FINISHED WOOD
BRICK	GRAVEL
CONCRETE	GYPSUM BOARD OR SHEATHING
CONCRETE MASONRY UNITS	PLYWOOD
CONTINUOUS BLOCKING	RIGID INSULATION
EARTH	STEEL

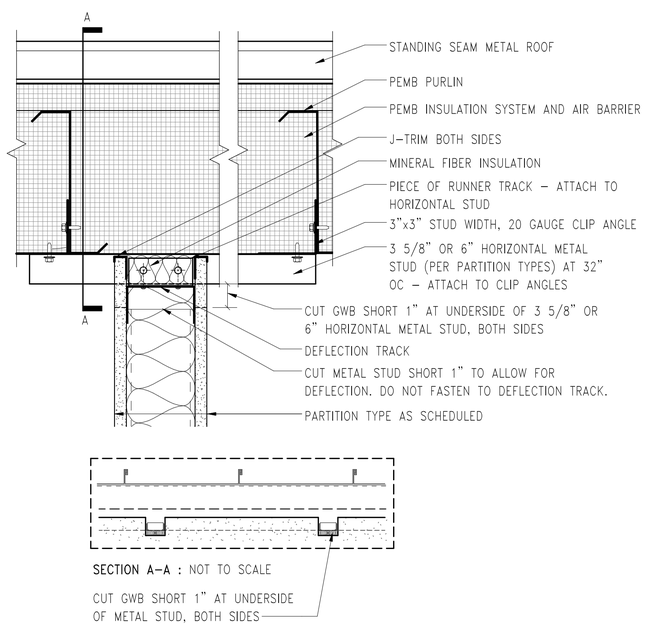

PARTITION TO PEMB PURLIN PARALLEL CONNECTION A2

3" = 1'–0" A–001

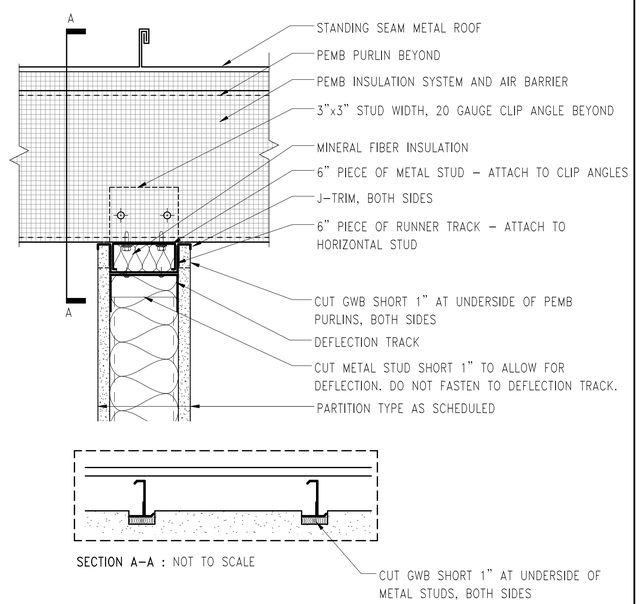

PARTITION TO PEMB PURLIN PERPENDICULAR CONNECTION A3

3" = 1'–0" A–001

SCALE: 3" = 1'–0" (0, 2", 4", 8")

SCALE: 1 1/2" = 1'–0" (0, 4", 8", 1'–4")

NAVFAC

COMMONWEALTH OF VIRGINIA
JOSEPH D. BOVEE
LIC. NO. 008802
2/03/16
ARCHITECT

HBA

APPROVED
FOR COMMANDER NAVFAC
ACTIVITY
SATISFACTORY TO DATE
DES JDB | DRW DAS | CHK WMS
PM
BRANCH MANAGER
CHIEF ENG/ARCH
FIRE PROTECTION

DEPARTMENT OF THE NAVY
NAVAL FACILITIES ENGINEERING COMMAND
NORTH CARLINA IPT
NAVAL FACILITIES ENGINEERING COMMAND
NAVAL STATION – NORFOLK, VIRGINIA
MCB CAMP LEJEUNE
JACKSONVILLE, NC
P-1475 CULTURAL ASSIMILATION FACILITY
PARTITION TYPES, LEGENDS, ABBREVIATIONS AND NOTES

SCALE: GRAPHIC
EFPROJECT NO.: 1386337
CONSTR. CONTR. NO. N40085–10–D–5301
NAVFAC DRAWING NO. 12711897
SHEET 25 OF 81
A-001

CRAFTFORM REVISION: 10 MAY 2014

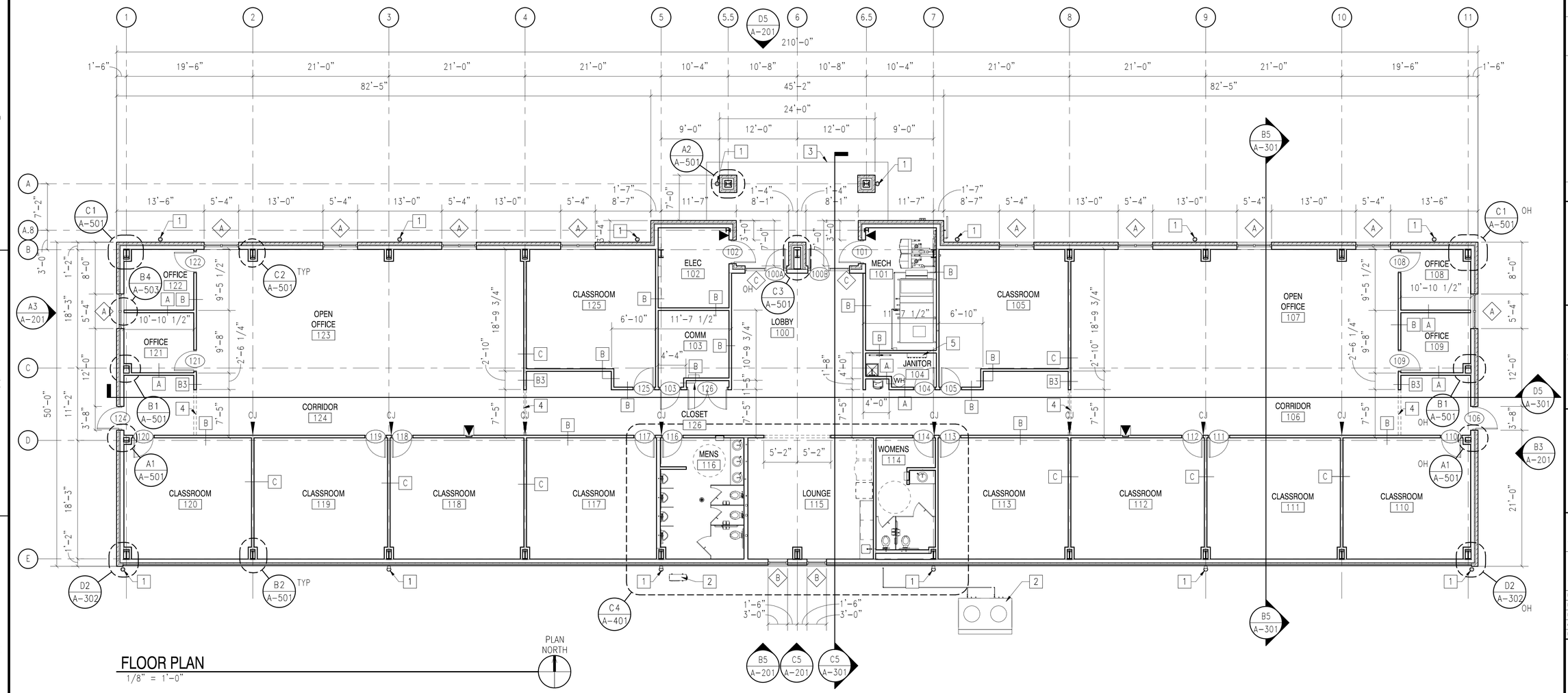

FLOOR PLAN

1/8" = 1'-0"

WORK NOTES

THIS SHEET ONLY

1. PREFINISHED METAL DOWNSPOUT AND BOOT – COORDINATE WITH CIVIL DRAWINGS
2. MECHANICAL EQUIPMENT – SEE MECHANICAL DRAWINGS
3. CONCRETE STOOP – COORDINATE WITH STRUCTURAL DRAWINGS
4. LINE OF BULKHEAD ABOVE
5. COMBINATION UTILITY SHELF/MOP HOLDER – MOUNT AT 66" AFF

GENERAL NOTES

1. SEE ENLARGED FLOOR PLAN FOR PARTITION TYPES NOT INDICATED.
2. SEE REFLECTED CEILING PLAN FOR HIGH WINDOWS IN SOUTH WALL.

SCALE: 1/8" = 1'-0" 0 4' 8' 16'

NAVFAC

COMMONWEALTH OF VIRGINIA
JOSEPH D. BOVEE
LIC. NO. 008802
6/03/16
ARCHITECT

HBA

APPROVED
FOR COMMANDER NAVFAC
ACTIVITY
SATISFACTORY TO DATE
DES JDB DRW DAS CHK WMS
PM
BRANCH MANAGER
CHIEF ENG/ARCH
FIRE PROTECTION

DEPARTMENT OF THE NAVY
NAVAL FACILITIES ENGINEERING COMMAND
NORTH CAROLINA IPT
NAVAL FACILITIES ENGINEERING COMMAND
NAVAL STATION – NORFOLK, VIRGINIA
MCB CAMP LEJEUNE
JACKSONVILLE, NC
P-1475 CULTURAL ASSIMILATION FACILITY
FLOOR PLAN

SCALE: GRAPHIC
EPROJECT NO.: 1386337
CONSTR. CONTR. NO. N40085-10-D-5301
NAVFAC DRAWING NO. 12711898
SHEET 26 OF 81
A-101

DRAWFORM REVISION: 10 MAY 2014

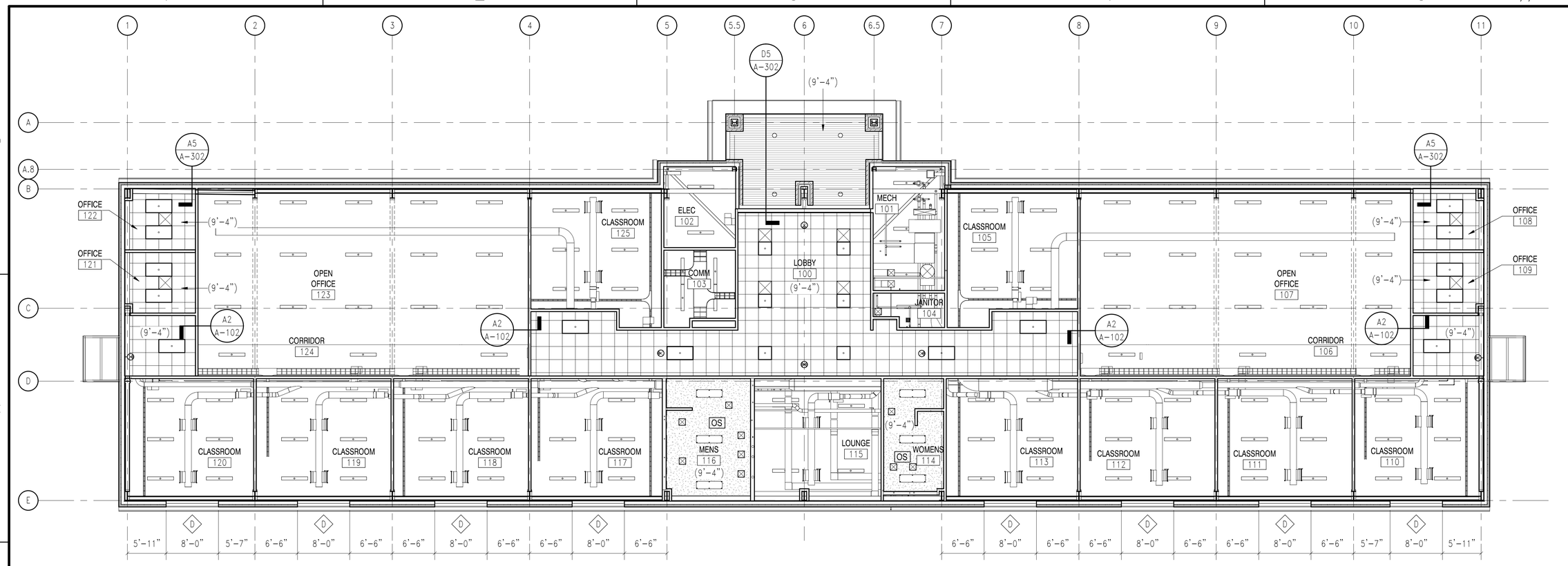

REFLECTED CEILING PLAN

1/8" = 1'-0"

PLAN NORTH

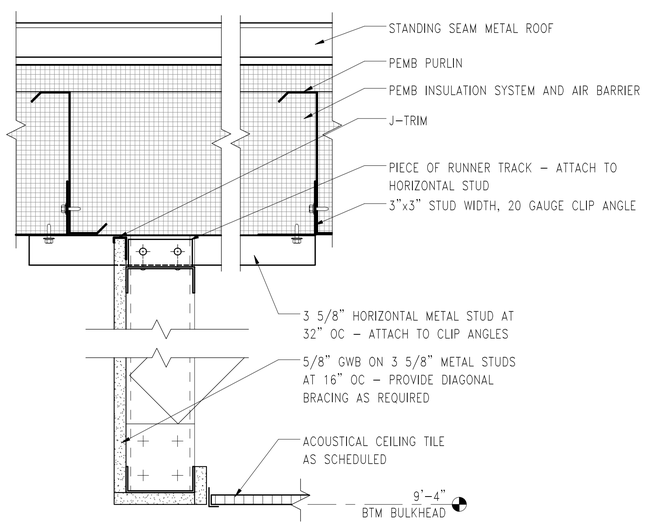

BULKHEAD DETAIL

3" = 1'-0"

A-102 A2

GENERAL NOTES

1. ALL DIMENSIONS ARE FROM FINISHED FACE OF WALL.

REFLECTED CEILING PLAN LEGEND

- PARTITIONS
- GWB CEILING
- VENTED SOFFIT PANEL
- 2' x 2' ACOUSTICAL CEILING TILE
- DIFFUSER – SEE MECHANICAL DRAWINGS
- LIGHT FIXTURE – SEE ELECTRICAL DRAWINGS
- EXIT SIGN – SEE ELECTRICAL DRAWINGS
- OS OCCUPANCY SENSOR – SEE ELECTRICAL DRAWINGS

SCALE: 3" = 1'-0" (0, 2", 4", 8")

SCALE: 1/8" = 1'-0" (0, 4', 8', 16')

NO.	DESCRIPTION	DATE	APPR

NAVFAC

COMMONWEALTH OF VIRGINIA
JOSEPH D. BOVEE
LIC. NO. 008802
2/03/16
ARCHITECT
SEAL

HBA
A/E INFO

APPROVED
FOR COMMANDER NAVFAC
ACTIVITY
SATISFACTORY TO DATE
DES JDB | DRW DAS | CHK WMS
PM
BRANCH MANAGER
CHIEF ENG/ARCH
FIRE PROTECTION

DEPARTMENT OF THE NAVY
NAVAL FACILITIES ENGINEERING COMMAND
NAVAL FACILITIES ENGINEERING COMMAND NORFOLK, VIRGINIA
NAVAL STATION – NORFOLK
NORTH CAROLINA IPT
MCB CAMP LEJEUNE
JACKSONVILLE, NC
P-1475 CULTURAL ASSIMILATION FACILITY
REFLECTED CEILING PLAN

SCALE: GRAPHIC
EPROJECT NO.: 1386337
CONSTR. CONTR. NO. N40085-10-D-5301
NAVFAC DRAWING NO. 12711899
SHEET 27 OF 81
A-102

CRAFTFORM REVISION: 10 MAY 2014

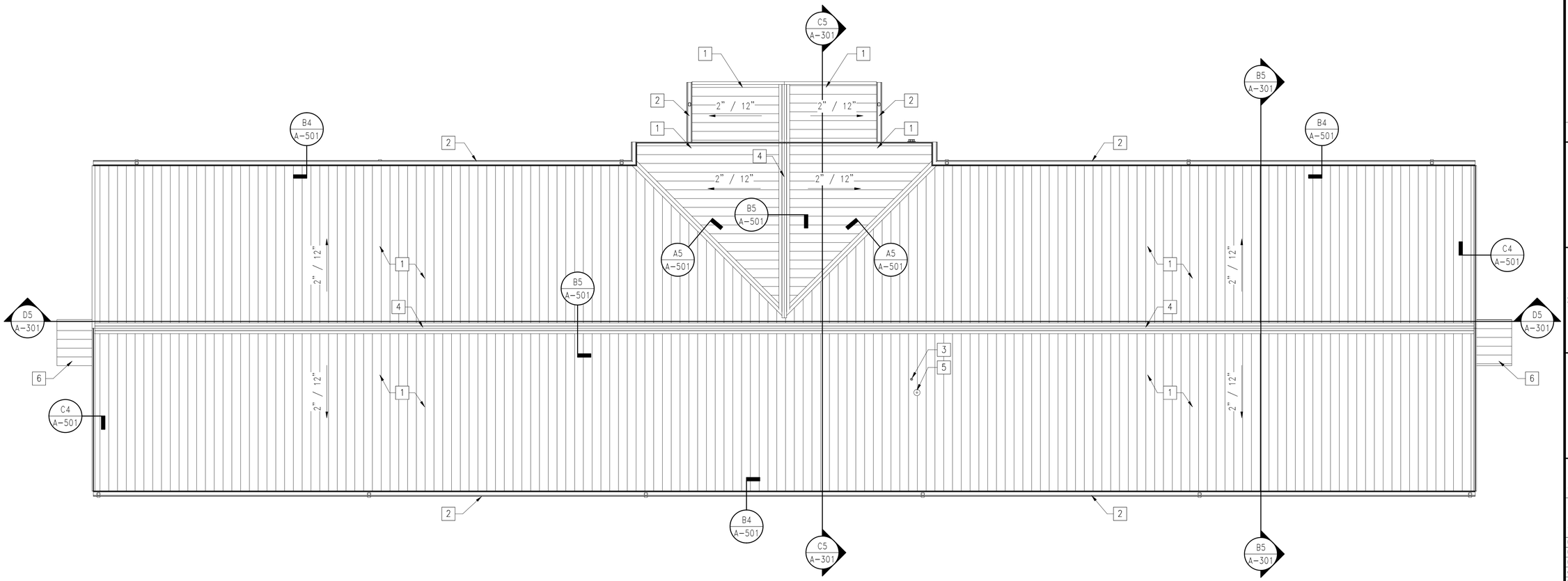

ROOF PLAN

1/8" = 1'-0"

WORK NOTES

THIS SHEET ONLY

1. STANDING SEAM METAL ROOFING
2. PREFINISHED METAL GUTTER AND DOWNSPOUTS
3. VENT THRU ROOF – SEE DETAIL C5/A-501
4. RIDGE FLASHING – SEE DETAIL B5/A-501
5. GAS FLUE – SEE DETAIL C5/A-501
6. CANOPY ROOF (BELOW)

SCALE: 1/8" = 1'-0" (0, 4', 8', 16')

NO.	DESCRIPTION	DATE	BY

NAVFAC

COMMONWEALTH OF VIRGINIA
JOSEPH D. BOVEE
LIC. NO. 008802
6/03/16
ARCHITECT
SEAL

HBA
A/E INFO

APPROVED
FOR COMMANDER NAVFAC
ACTIVITY
SATISFACTORY TO DATE

DES	JDB	DRW	DAS	CHK	WMS

PM
BRANCH MANAGER
CHIEF ENG/ARCH
FIRE PROTECTION

DEPARTMENT OF THE NAVY
NAVAL FACILITIES ENGINEERING COMMAND
NAVAL FACILITIES ENGINEERING COMMAND
NAVAL STATION – NORFOLK, VIRGINIA
NORTH CAROLINA IPT
MCB CAMP LEJEUNE
JACKSONVILLE, NC
P-1475 CULTURAL ASSIMILATION FACILITY
ROOF PLAN

SCALE: GRAPHIC
EPROJECT NO.: 1386337
CONSTR. CONTR. NO. N40085-10-D-5301
NAVFAC DRAWING NO. 12711900
SHEET 28 OF 81
A-103

DRAWFORM REVISION: 10 MAY 2014

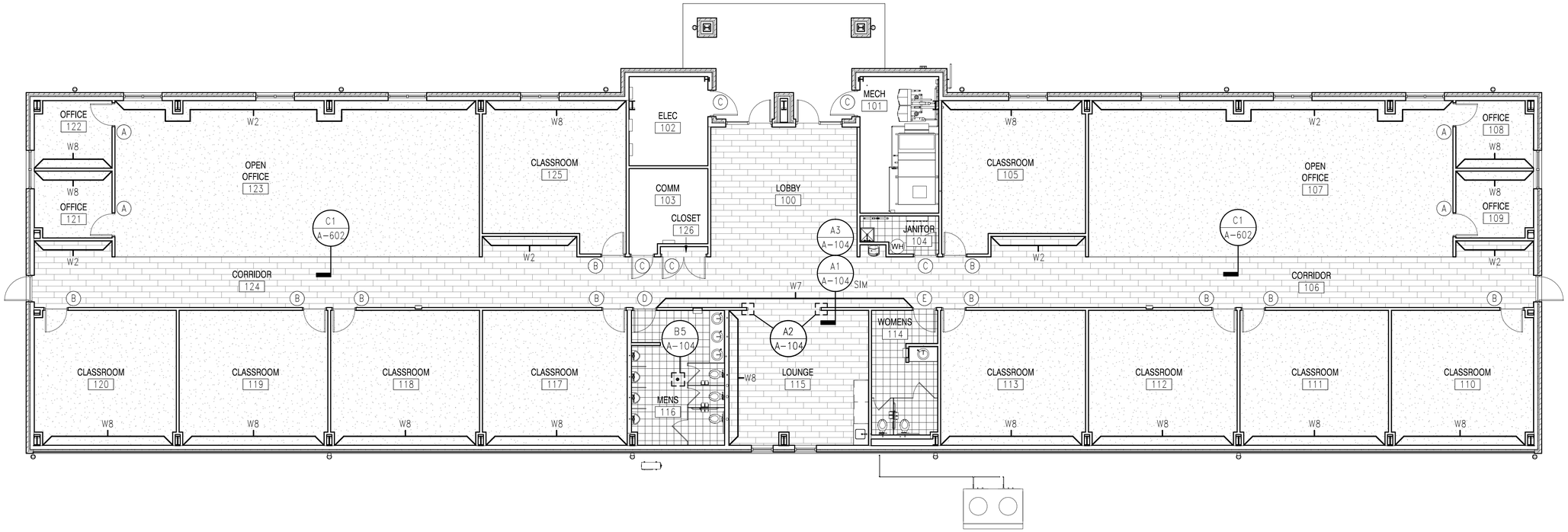

FINISH PLAN
1/8" = 1'-0"

PLAN NORTH

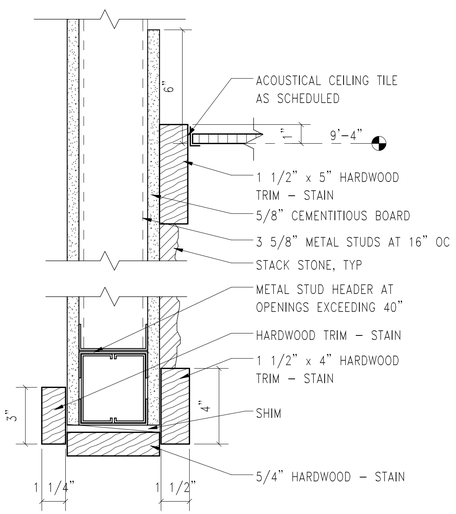

HEAD DETAIL
3" = 1'-0"
A-104, A-601 (A1)

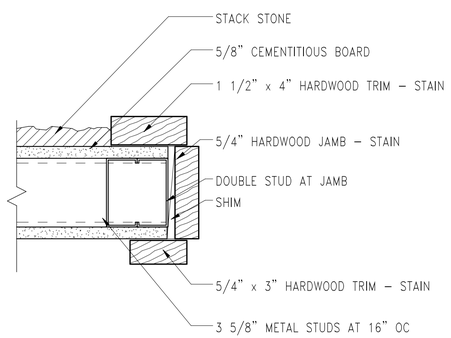

JAMB DETAIL
3" = 1'-0"
A-104 (A2)

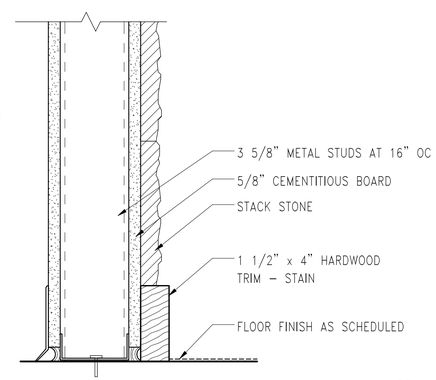

SILL DETAIL
3" = 1'-0"
A-104 (A3)

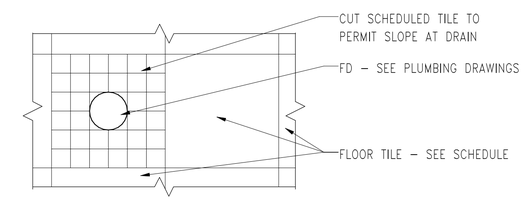

TILE DETAIL AT FLOOR DRAIN
1 1/2" = 1'-0"
A-104 (B5)

FINISH LEGEND

- F1 – SOLID VINYL TILE
- F2 – CARPET TILE
- F3 – PORCELAIN TILE
- F4 – SEALED CONCRETE
- (A) SIGNAGE TYPE – SEE SIGNAGE SCHEDULE A-602

GENERAL NOTES

1. FINISH LEGEND HATCHES DO NOT INDICATE EXACT TILE PLACEMENT. ONLY FLOORING MATERIAL LOCATIONS AND OVERALL PATTERNS. SEAMING DIAGRAMS OF ALL FLOOR MATERIALS MUST BE SUBMITTED FOR APPROVAL PRIOR TO INSTALLATION.

SCALE: 3" = 1'-0" (0, 2", 4", 8")
SCALE: 1 1/2" = 1'-0" (0, 4", 8", 1'-4")
SCALE: 1/8" = 1'-0" (0, 4', 8', 16')

NAVFAC

COMMONWEALTH OF VIRGINIA
JOSEPH D. BOVEE
LIC. NO. 008802
2/03/16
ARCHITECT
SEAL

HBA
A/E INFO

APPROVED
FOR COMMANDER NAVFAC
ACTIVITY
SATISFACTORY TO DATE
DES JDB | DRW DAS | CHK WMS
PM
BRANCH MANAGER
CHIEF ENG/ARCH
FIRE PROTECTION

DEPARTMENT OF THE NAVY
NAVAL FACILITIES ENGINEERING COMMAND
NORTH CAROLINA IPT
NAVAL FACILITIES ENGINEERING COMMAND
NAVAL STATION – NORFOLK, VIRGINIA
MCB CAMP LEJEUNE
JACKSONVILLE, NC
P-1475 CULTURAL ASSIMILATION FACILITY
FINISH PLAN

SCALE: GRAPHIC
EPROJECT NO.: 1386337
CONSTR. CONTR. NO. N40085-10-D-5301
NAVFAC DRAWING NO. 12711901
SHEET 29 OF 81
A-104

DRAWFORM REVISION: 10 MAY 2014

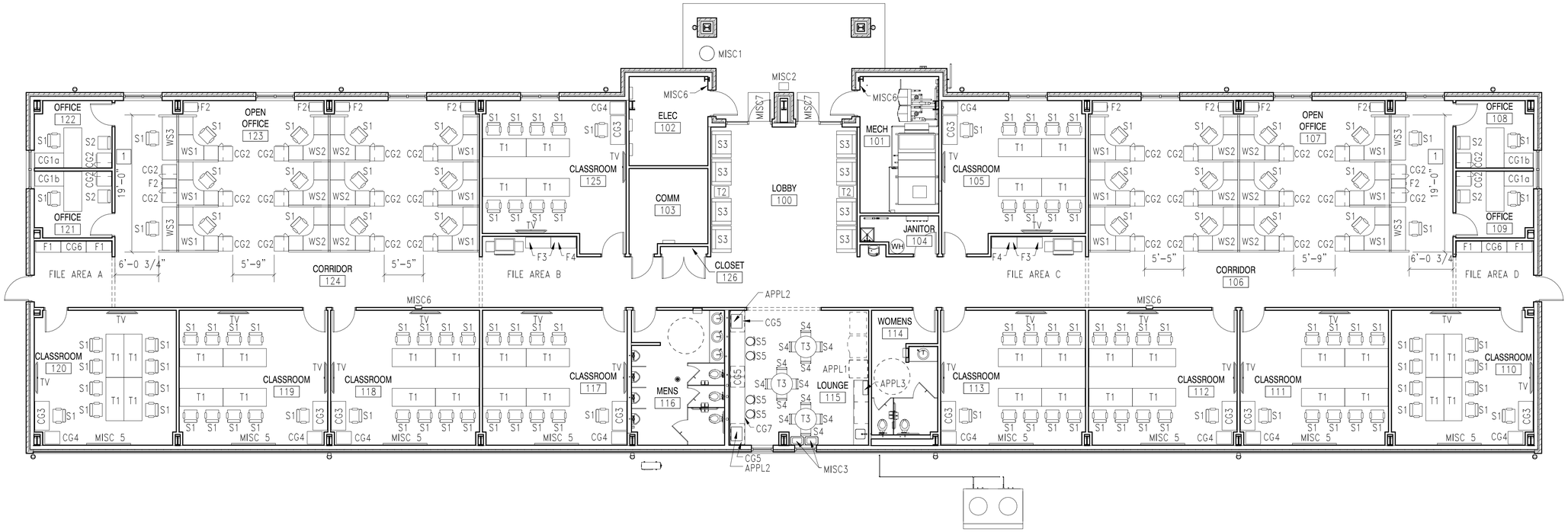

FURNITURE PLAN

1/8" = 1'-0"

FURNITURE LEGEND

S1	TASK CHAIR, MID BACK
S2	GUEST CHAIR
S3	WAITING/LOUNGE CHAIR
S4	STACK CHAIR
S5	STOOL
T1	CLASSROOM TABLE, 30x72
T2	SIDE TABLE, 14x28
T3	LUNCH TABLE, 36" DIAMETER
CG1a	RIGHT "L" DESK, 30x66/24x48 RETURN
CG1b	LEFT "L" DESK, 30x66/24x48 RETURN
CG2	STORAGE TOWER
CG3	INSTRUCTOR DESK, 24x48
CG4	A/V CREDENZA – 21"W x 25"D
CG5	UNDER COUNTER DOUBLE DOOR CABINET, 36W x 18D x 39 1/4H
CG6	DOUBLE DOOR STORAGE CABINET, 36W x 18D x 64H
CG7	LUNCH COUNTER
WS1	WORKSTATIONS, 6x6, CLUSTER OF 3
WS2	WORKSTATIONS, 6x6, CLUSTER OF 6
WS3	SINGLE WORKSTATION, 24x72
F1	LATERAL FILE CABINET, 42W x 18D x 5H
F2	VERTICAL STORAGE CABINET, 2 FILE DRAWERS BELOW HINGED DOOR SECTION WITH 2 SHELVES
F3	LATERAL FILE CABINET, 42W x 18D x 3H
F4	FILE TOP SURFACE, HIGH PRESSURE LAMINATE, 18x84
APPL1	REFRIGERATOR
APPL2	MICROWAVE
APPL3	COFFEE MAKER
MISC1	EXTERIOR TRASH RECEPTACLE
MISC2	BOOT SCRUBBER
MISC3	LARGE WASTE RECEPTACLE
MISC4	DESK SIDE WASTE RECEPTACLE
MISC5	GLASSBOARD WRITING SURFACE 4'x8'
MISC6	FIRE EXTINGUISHER
MISC7	WALK-OFF MAT

GENERAL NOTES

1. FURNITURE, FIXTURES & EQUIPMENT (FF&E) WILL BE PURCHASED UNDER SEPARATE PROCUREMENT AND ARE SHOWN HERE FOR COORDINATION PURPOSES ONLY.
2. SEE FF&E PROCUREMENT PACKAGE FOR FURTHER DETAILS.
3. DIMENSIONS ARE FROM FINISHED FACE OF WALL TO PANEL EDGE OR FROM FURNITURE EDGE TO FURNITURE EDGE.
4. TV MONITORS ARE NOT IN CONTRACT.

WORK NOTES

THIS SHEET ONLY

1 HOLD TIGHT THIS DIMENSION AND DO NOT PROJECT OVER EDGE OF CARPET. FIELD VERIFY DIMENSION.

SCALE: 1/8" = 1'-0" 0 4' 8' 16'

NO.	DESCRIPTION	DATE	APPR

NAVFAC

COMMONWEALTH OF VIRGINIA
JOSEPH D. BOVEE
LIC. NO. 008602
6/03/16
ARCHITECT
SEAL

HBA
A/E INFO

APPROVED
FOR COMMANDER NAVFAC
ACTIVITY
SATISFACTORY TO DATE
DES JDB DRW DAS CHK WMS
PM
BRANCH MANAGER
CHIEF ENG/ARCH
FIRE PROTECTION

DEPARTMENT OF THE NAVY
NAVAL FACILITIES ENGINEERING COMMAND
NAVAL FACILITIES ENGINEERING COMMAND – NORFOLK, VIRGINIA
NAVAL STATION – NORFOLK, VIRGINIA
NORTH CAROLINA IPT
MCB CAMP LEJEUNE
JACKSONVILLE, NC
P-1475 CULTURAL ASSIMILATION FACILITY
FURNITURE PLAN

SCALE: GRAPHIC
EPROJECT NO.: 1386337
CONSTR. CONTR. NO. N40085-10-D-5301
NAVFAC DRAWING NO. 12711902
SHEET 30 OF 81
A-105

DRAWFORM REVISION: 10 MAY 2014

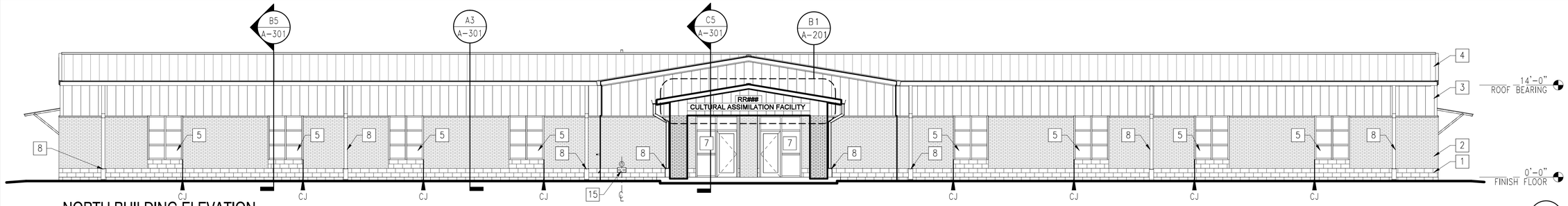

NORTH BUILDING ELEVATION

1/8" = 1'-0"

A-101 D5

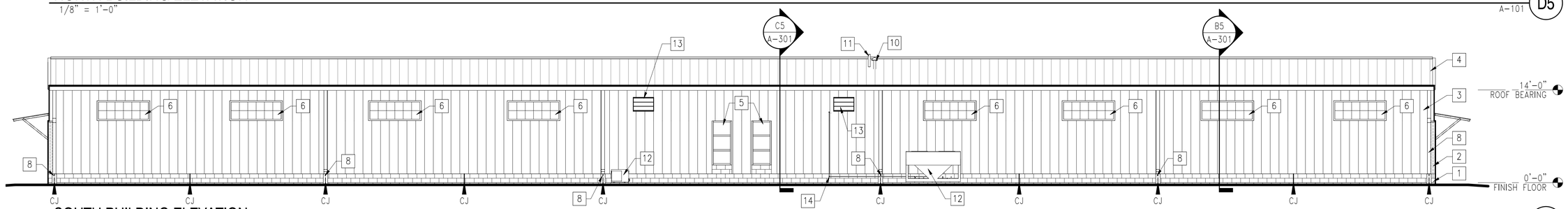

SOUTH BUILDING ELEVATION

1/8" = 1'-0"

A-101 C5

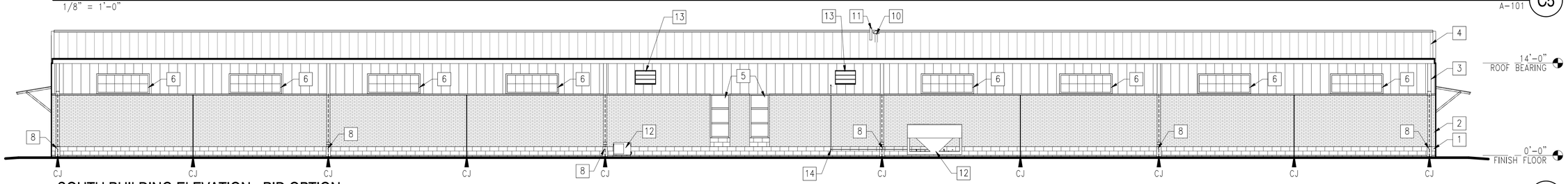

SOUTH BUILDING ELEVATION - BID OPTION

1/8" = 1'-0"

A-101 B5

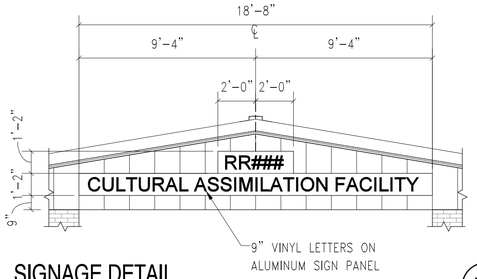

SIGNAGE DETAIL

1/4" = 1'-0"

A-201 B1

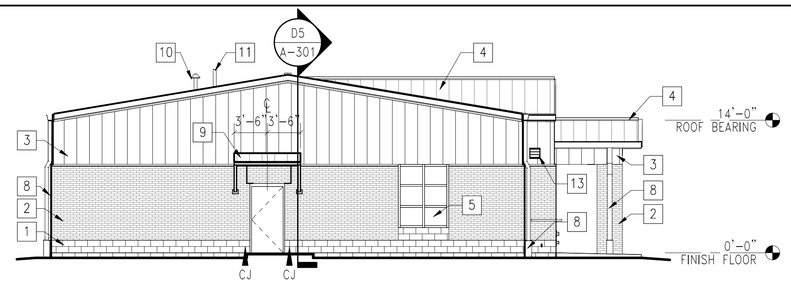

EAST BUILDING ELEVATION

1/8" = 1'-0"

A-101 B3

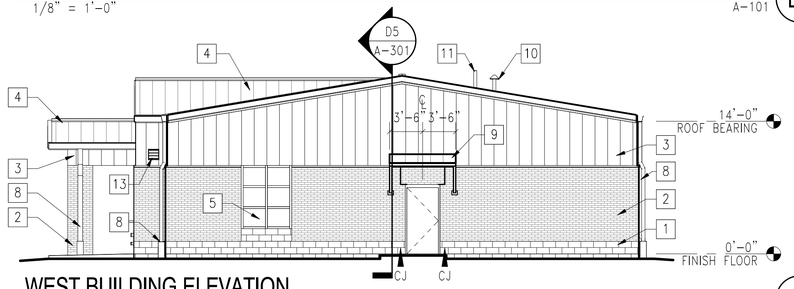

WEST BUILDING ELEVATION

1/8" = 1'-0"

A-101 A3

WORK NOTES

THIS SHEET ONLY

1. SPLIT FACE CMU
2. BRICK VENEER
3. METAL PANEL SIDING
4. STANDING SEAM METAL ROOF
5. ALUMINUM STOREFRONT WINDOW
6. TRANSLUCENT WALL SYSTEM
7. ALUMINUM STOREFRONT DOOR, SIDELIGHT & TRANSOM
8. PREFINISHED METAL DOWNSPOUT AND BOOT – COORDINATE WITH CIVIL DRAWINGS
9. PEMB CANOPY CENTERED ON DOOR BELOW
10. GAS FLUE – COORDINATE WITH MECH DRAWINGS
11. VTR – SEE DETAIL C5/A-501
12. MECHANICAL EQUIPMENT – SEE MECHANICAL DRAWINGS
13. PREFINISHED LOUVER – SEE DETAILS ON SHEET A-502 COORDINATE WITH MECHANICAL DRAWINGS
14. REFRIGERANT LINES
15. FIRE DEPARTMENT CONNECTIONS – CONNECTION AT SPLIT FACE CMU, PUT FLAT FACE OUT AND CENTER ON BLOCK – REFER TO FIRE PROTECTION DRAWINGS.

EXTERIOR COLOR SCHEDULE

FINISH ITEM	MANUFACTURER	COLOR
BRICK VENEER	LEE BRICK	IRONSPOT RED SMOOTH
SPLIT FACE CMU	ADAMS PRODUCTS	OFF WHITE 9303
PEMB METAL PANELS	AMERICAN BUILDINGS	PEARL GRAY
PEMB COPING / FASCIA	AMERICAN BUILDINGS	PEARL GRAY
PEMB GUTTER / DOWNSPOUT	AMERICAN BUILDINGS	PEARL GRAY
HM DOORS & FRAMES	TBD	PAINT TO MATCH SIDING
ALUMINUM STOREFRONT	YKK – YHS50TU	CLEAR ANODIZED
TRANSLUCENT WALL ASSEMBLY	KALWALL	CLEAR ANODIZED

SCALE: 1/4" = 1'-0" 0 2' 4' 8'

SCALE: 1/8" = 1'-0" 0 4' 8' 16'

NAVFAC

COMMONWEALTH OF VIRGINIA
JOSEPH D. BOVEE
LIC. NO. 008802
6/03/16
ARCHITECT

HBA

A/E INFO

APPROVED

FOR COMMANDER NAVFAC

ACTIVITY

SATISFACTORY TO DATE

DES	JDB	DRW	DAS	CHK	WMS

PM

BRANCH MANAGER

CHIEF ENG/ARCH

FIRE PROTECTION

DEPARTMENT OF THE NAVY
NAVAL FACILITIES ENGINEERING COMMAND
NAVAL FACILITIES ENGINEERING COMMAND
NAVAL STATION – NORFOLK, VIRGINIA
NORTH CAROLINA IPT
MCB CAMP LEJEUNE
JACKSONVILLE, NC

P-1475 CULTURAL ASSIMILATION FACILITY

BUILDING ELEVATIONS

SCALE: GRAPHIC

EPROJECT NO.: 1386337

CONSTR. CONTR. NO. N40085-10-D-5301

NAVFAC DRAWING NO. 12711903

SHEET 31 OF 81

A-201

CRAWFORM REVISION: 10 MAY 2014

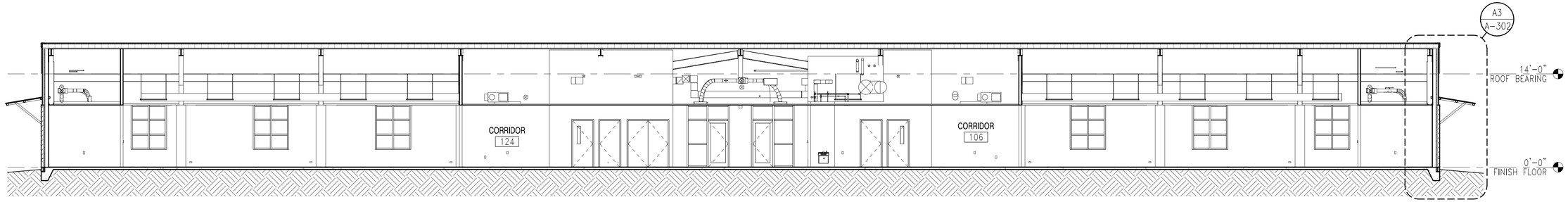

BUILDING SECTION
1/8" = 1'-0"
A-101, A-103, A-201 D5

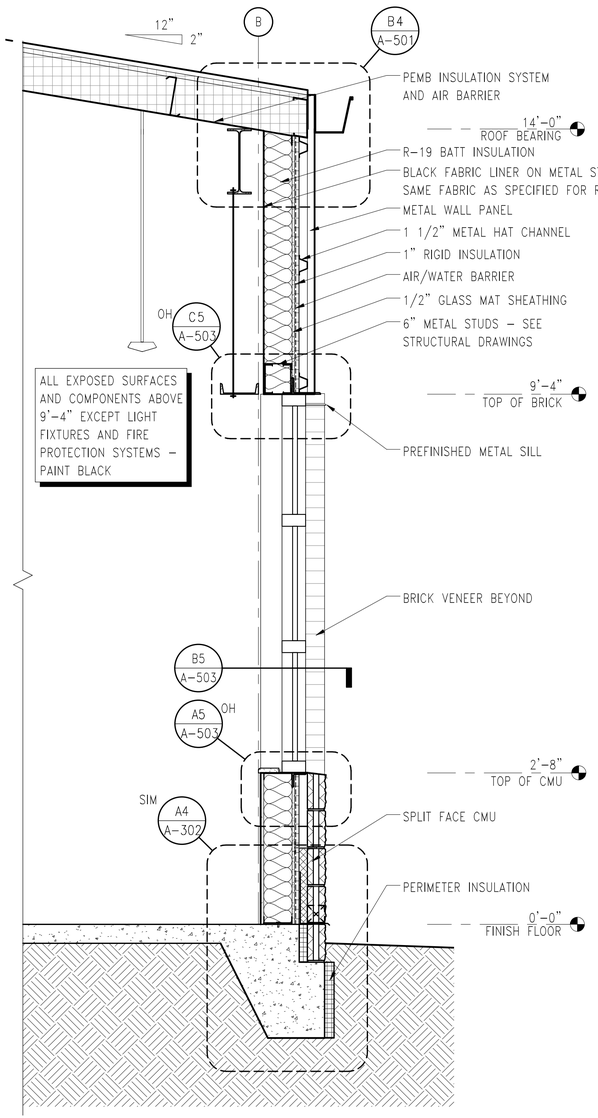

WALL SECTION
3/4" = 1'-0"
A-301 A2

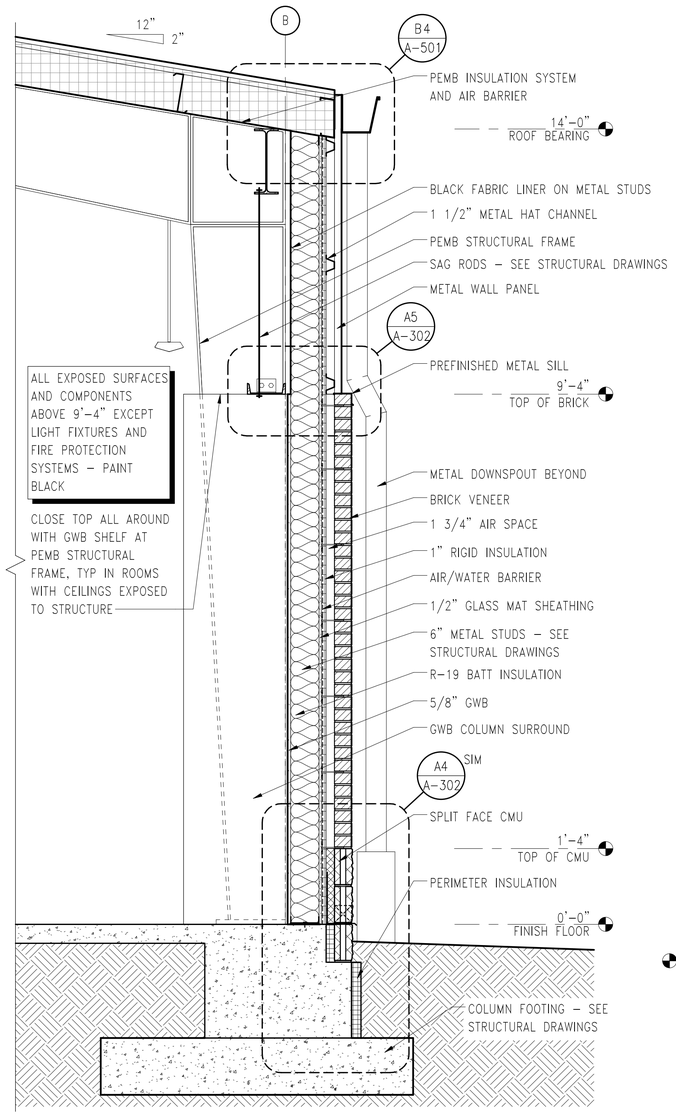

WALL SECTION
3/4" = 1'-0"
A-201 A3

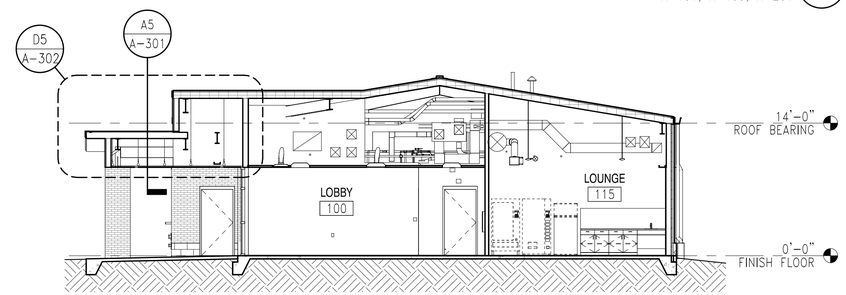

BUILDING SECTION
1/8" = 1'-0"
A-101, A-103, A-201 C5

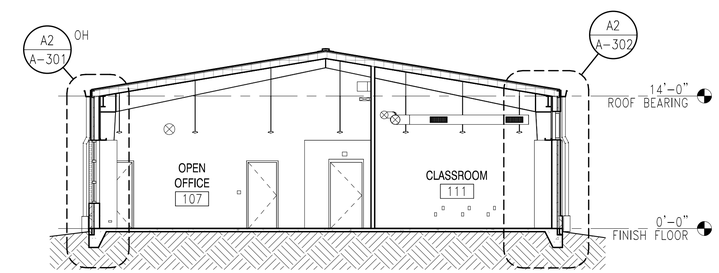

BUILDING SECTION
1/8" = 1'-0"
A-101, A-103, A-201 B5

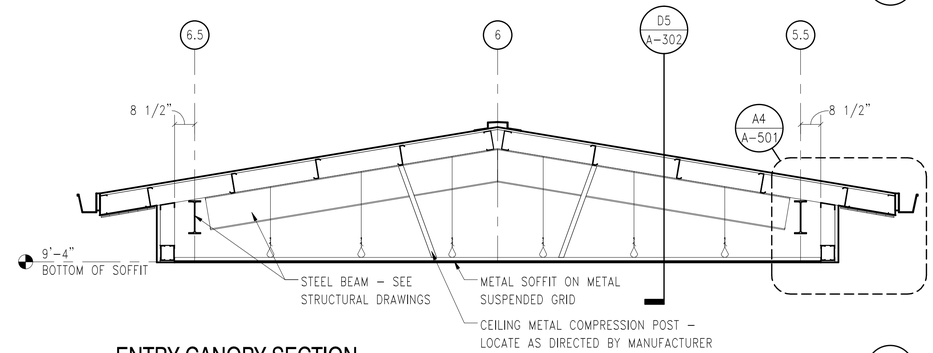

ENTRY CANOPY SECTION
3/8" = 1'-0"
A-301 A5

SCALE: 3/8" = 1'-0" 0 1'-6" 3' 6'
SCALE: 3/4" = 1'-0" 0 9" 1'-6" 3'
SCALE: 1/8" = 1'-0" 0 4' 8' 16'

NAVFAC

COMMONWEALTH OF VIRGINIA
JOSEPH D. BOVEE
LIC. NO. 008802
2/03/16
ARCHITECT

HBA

A/E INFO

APPROVED
FOR COMMANDER NAVFAC
ACTIVITY
SATISFACTORY TO DATE
DES JDB DRW DAS CHK WMS
PM
BRANCH MANAGER
CHIEF ENG/ARCH
FIRE PROTECTION

DEPARTMENT OF THE NAVY
NAVAL FACILITIES ENGINEERING COMMAND
NAVAL FACILITIES ENGINEERING COMMAND
NORFOLK, VIRGINIA
NAVAL STATION – NORFOLK, VIRGINIA
NORTH CAROLINA (PT)
MCB CAMP LEJEUNE
JACKSONVILLE, NC
P-1475 CULTURAL ASSIMILATION FACILITY
BUILDING & WALL SECTIONS

SCALE: GRAPHIC
EPROJECT NO.: 1386337
CONSTR. CONTR. NO.
N40085-10-D-5301
NAVFAC DRAWING NO.
12711904
SHEET 32 OF 81
A-301

DRAWFORM REVISION: 10 MAY 2014

SEE WALL SECTIONS FOR TYPICAL EXTERIOR WALL CONSTRUCTION NOTES

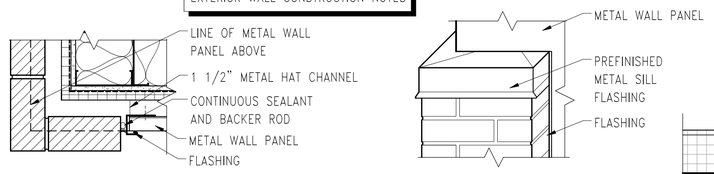

SIDING TO MASONRY DETAIL (D2)

1 1/2" = 1'-0" — A-101

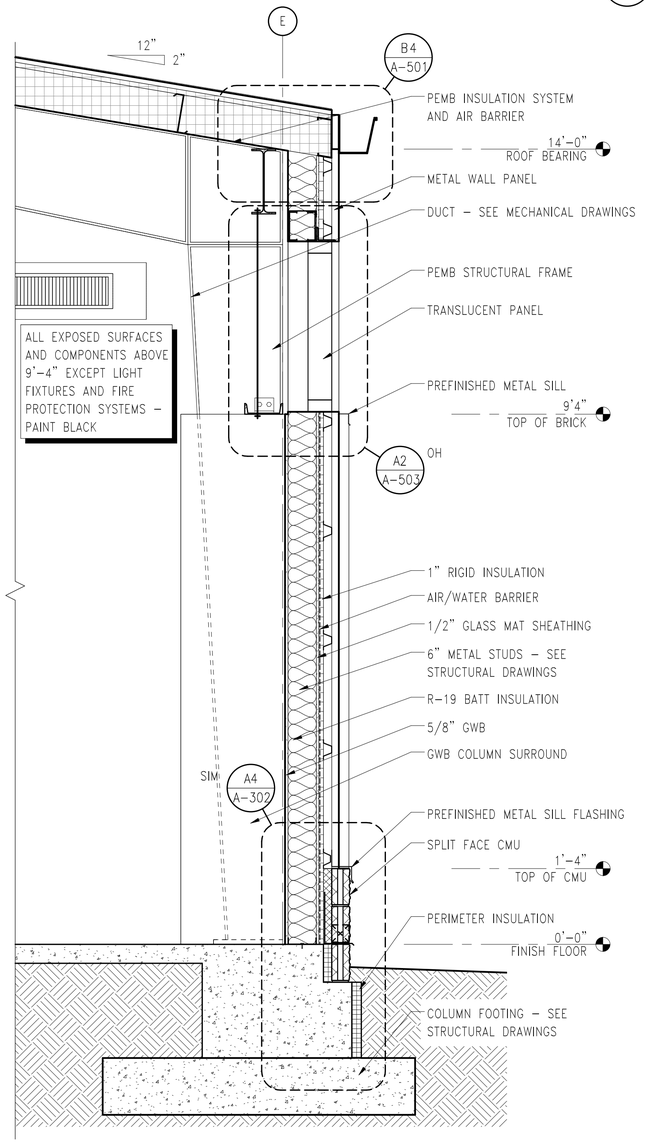

WALL SECTION (A2)

3/4" = 1'-0" — A-301

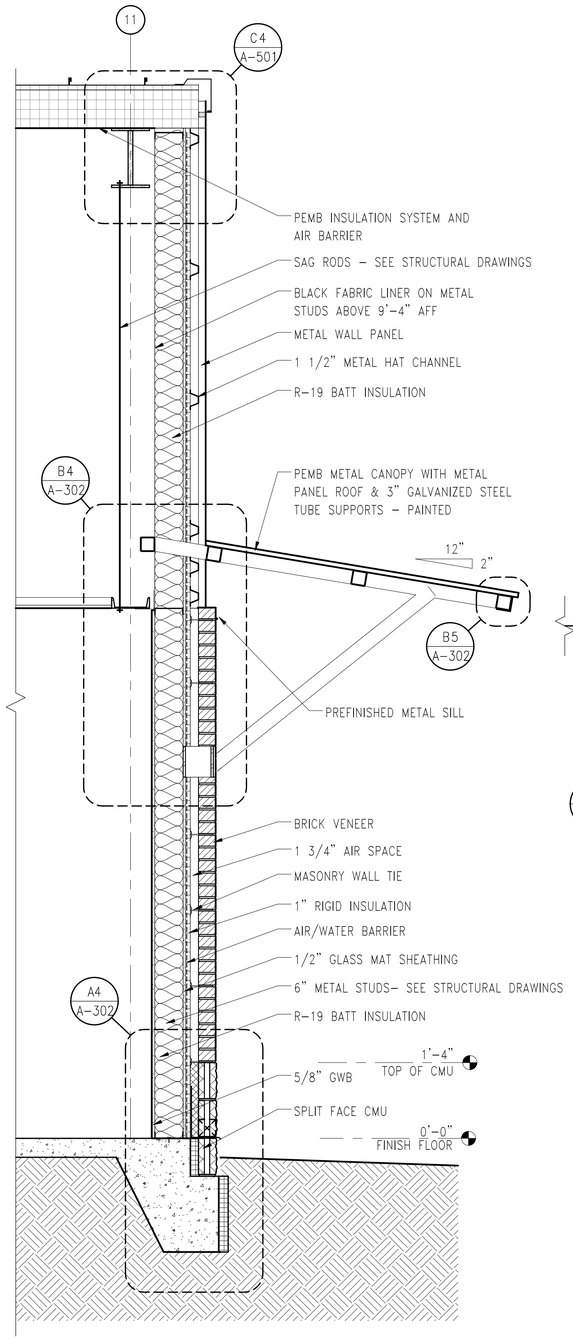

WALL SECTION (A3)

3/4" = 1'-0" — A-301

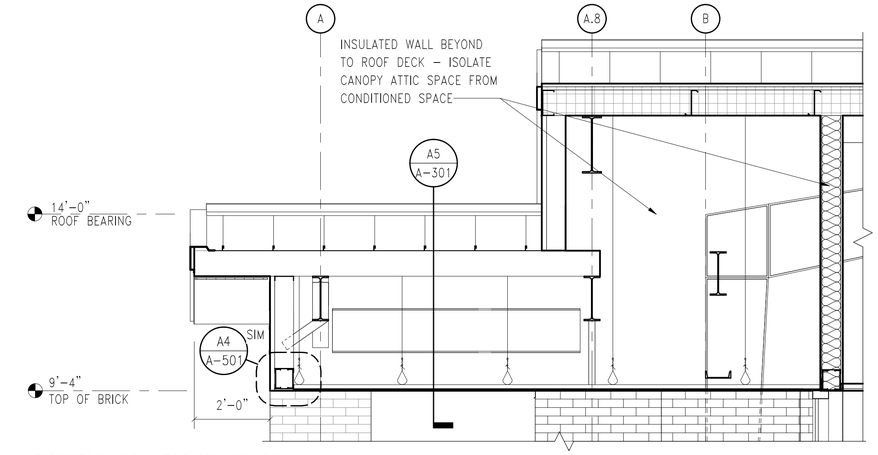

ENTRY CANOPY SECTION (D5)

1/2" = 1'-0" — A-102, A-301

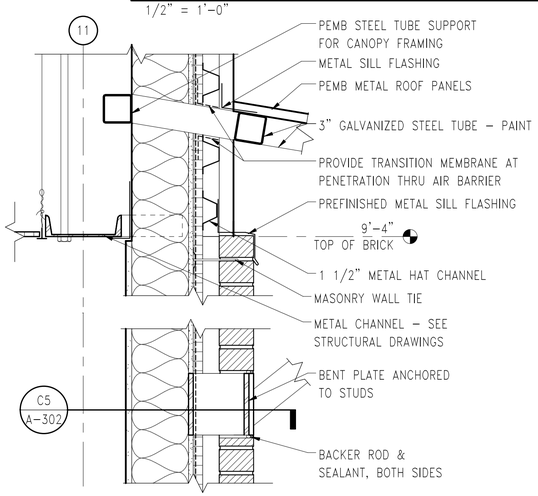

CANOPY DETAIL (B4)

1 1/2" = 1'-0" — A-302

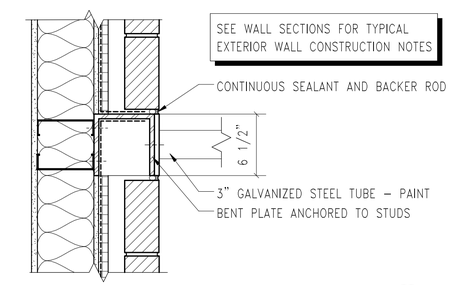

METAL CANOPY SUPPORT (C5)

1 1/2" = 1'-0" — A-302

CANOPY DETAIL (B5)

1 1/2" = 1'-0" — A-302

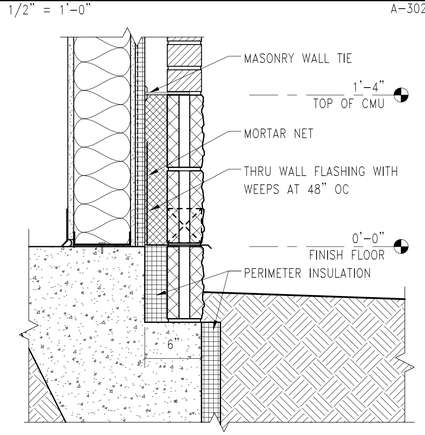

BASE DETAIL (A4)

1 1/2" = 1'-0" — A-301, A-302

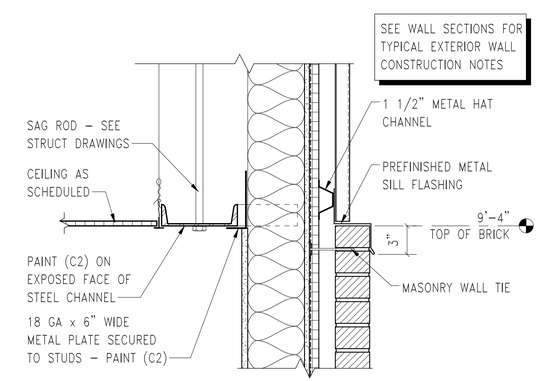

DETAIL (A5)

1 1/2" = 1'-0" — A-102, A-301

SCALE: 3/4" = 1'-0" (0, 9", 1'-6", 3')

SCALE: 1 1/2" = 1'-0" (0, 4", 8", 1'-4")

NAVFAC	
COMMONWEALTH OF VIRGINIA — JOSEPH D. BOVEE LIC. NO. 008802 6/03/16 ARCHITECT	SEAL
HBA	A/E INFO
APPROVED	
FOR COMMANDER NAVFAC	
ACTIVITY	
SATISFACTORY TO DATE	
DES JDB / DRW DAS / CHK WMS	
PM	
BRANCH MANAGER	
CHIEF ENG/ARCH	
FIRE PROTECTION	

NAVAL FACILITIES ENGINEERING COMMAND — NAVAL STATION – NORFOLK, VIRGINIA

DEPARTMENT OF THE NAVY — NAVAL FACILITIES ENGINEERING COMMAND — NORTH CAROLINA IPT

MCB CAMP LEJEUNE — JACKSONVILLE, NC

P-1475 CULTURAL ASSIMILATION FACILITY

WALL SECTIONS & DETAILS

SCALE:	GRAPHIC
EPROJECT NO.:	1386337
CONSTR. CONTR. NO.	N40085-10-D-5301
NAVFAC DRAWING NO.	12711905
SHEET	33 OF 81

A-302

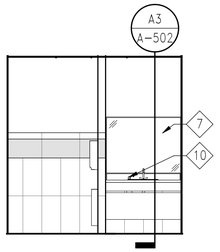

INTERIOR ELEVATION - WOMENS (D1)
1/4" = 1'-0" A-401

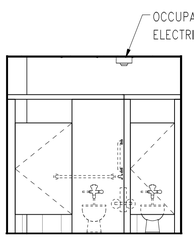

INTERIOR ELEVATION - WOMENS (C1)
1/4" = 1'-0" A-401

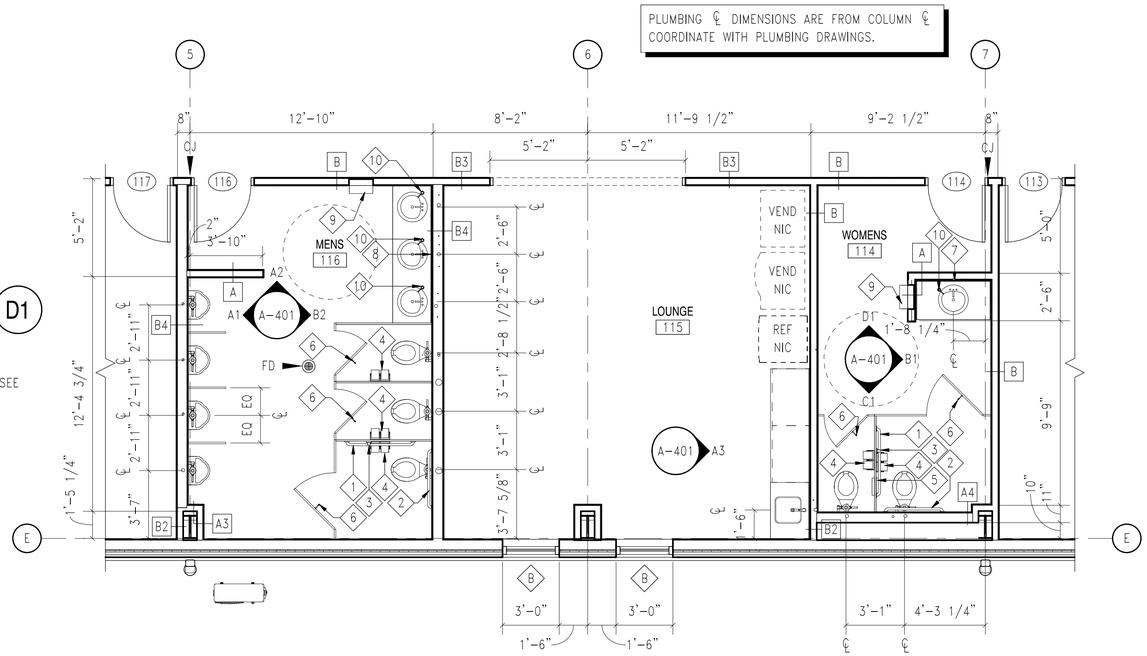

ENLARGED FLOOR PLAN (C4)
1/4" = 1'-0" A-101

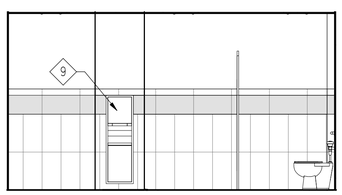

INTERIOR ELEVATION - WOMENS (B1)
1/4" = 1'-0" A-401

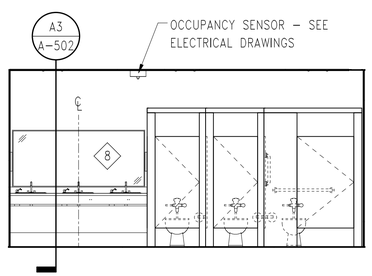

INTERIOR ELEVATION - MENS (B2)
1/4" = 1'-0" A-401

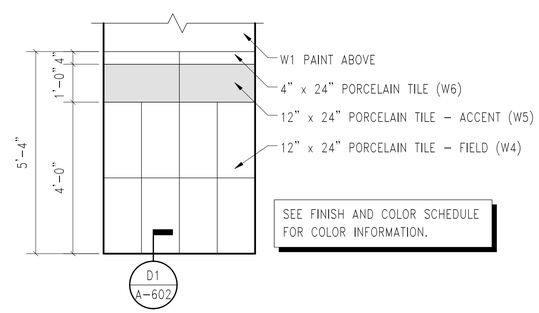

TYPICAL WALL TILE PATTERN (B3)
1/2" = 1'-0" A-602

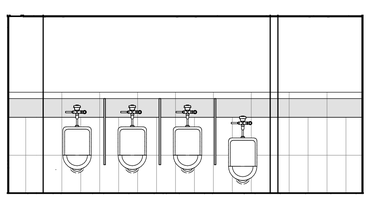

INTERIOR ELEAVTION - MENS (A1)
1/4" = 1'-0" A-401

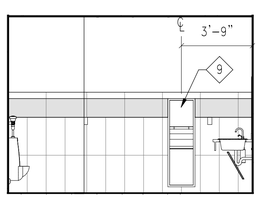

INTERIOR ELEVATION - MENS (A2)
1/4" = 1'-0" A-401

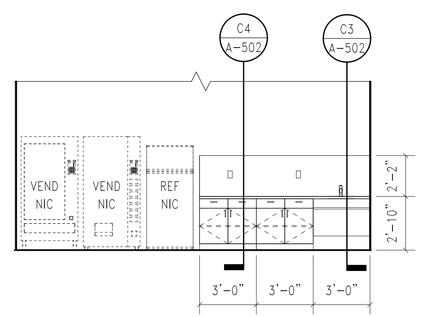

INTERIOR ELEVATION - LOUNGE (A3)
1/4" = 1'-0" A-401

TOILET ACCESSORY SCHEDULE

MARK	DESCRIPTION	MOUNTING	HEIGHT	REMARKS
1	42" GRAB BAR - HORIZONTAL	SURFACE	36"	1, 4, 7
2	36" GRAB BAR - HORIZONTAL	SURFACE	36"	1, 4, 7
3	18" GRAB BAR - VERTICAL	SURFACE	40"	4, 5, 7
4	TOILET TISSUE DISPENSER	SURFACE	19"	1
5	NAPKIN DISPOSAL	THRU PARTITION	30"	1
6	COAT HOOK WITH BUMPER	SURFACE	66"	1, 6
7	48" X 36" STAINLESS STEEL FRAME MIRROR	SURFACE	74"	1, 3
8	84" X 36" STAINLESS STEEL FRAME MIRROR	SURFACE	74"	1, 3
9	PAPER TOWEL DISPENSER/WASTE RECEPTACLE	RECESSED	60"	1, 7, 8
10	SOAP DISPENSER	COUNTER	-	2

TOILET ACCESSORY SCHEDULE REMARKS

1. LISTED MOUNTING HEIGHTS ARE FROM FINISH FLOOR TO TOP OF THE UNIT, UNLESS OTHERWISE INDICATED.
2. SURFACE MOUNT WITH VALVE 9" TO RIGHT OR LEFT OF LAVATORY CENTER.
3. MOUNT MIRROR WITH LONG DIMENSION HORIZONTAL, ALIGN BOTTOM OF MIRROR WITH TOP OF BACKSPLASH.
4. GRAB BAR TO HAVE PEENED (NON-SLIP) GRIPPING SURFACE.
5. MOUNTING HEIGHT TO BOTTOM OF GRAB BAR.
6. COAT HOOK WITH BUMPER TO BE PROVIDED AND INSTALLED BY THE TOILET PARTITION MANUFACTURER.
7. PROVIDE WOOD BLOCKING OR 18 GA x 6" WIDE METAL PLATE IN WALL AS REQUIRED TO SECURE TOILET ACCESSORIES.
8. LISTED MOUNTING HEIGHT IS FROM FINISH FLOOR TO TOP OF OPERABLE PART OF ACCESSORY - SEE TOILET ACCESSORY ELEVATION/PLAN DETAILS BELOW.

TOILET ACCESSORY ELEVATIONS / PLANS

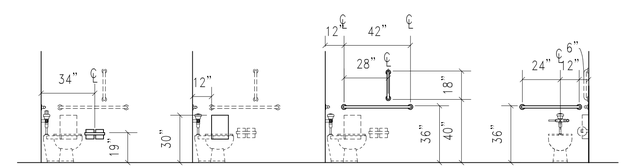

TOILET TISSUE DISPENSER | SANITARY NAPKIN DISPOSAL | 42" GRAB BAR 18" GRAB BAR | 36" REAR GRAB BAR

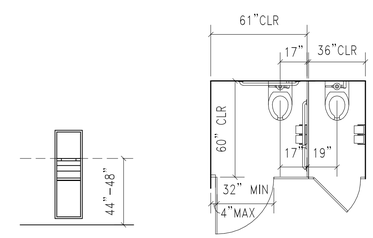

PAPER TOWEL DISPENSER/ WASTE RECEPTACLE | ADA TOILET & AMBULATORY TOILET COMPARTMENT

SCALE: 1/2" = 1'-0" (0, 1', 2', 4') SCALE: 1/4" = 1'-0" (0, 2', 4', 8')

NAVFAC

COMMONWEALTH OF VIRGINIA
JOSEPH D. BOVEE
LIC. NO. 008802
2/03/16
ARCHITECT

HBA

APPROVED
FOR COMMANDER NAVFAC
ACTIVITY
SATISFACTORY TO DATE
DES JDB | DRW DAS | CHK WMS
PM
BRANCH MANAGER
CHIEF ENG/ARCH
FIRE PROTECTION

NAVAL FACILITIES ENGINEERING COMMAND
DEPARTMENT OF THE NAVY
NAVAL FACILITIES ENGINEERING COMMAND
NORTH CAROLINA IPT
NAVAL STATION - NORFOLK, VIRGINIA
MCB CAMP LEJEUNE
JACKSONVILLE, NC
P-1475 CULTURAL ASSIMILATION FACILITY
ENLARGED FLOOR PLANS & INTERIOR ELEVATIONS

SCALE: GRAPHIC
EPROJECT NO.: 1386337
CONSTR. CONTR. NO. N40085-10-D-5301
NAVFAC DRAWING NO. 12711906
SHEET 34 OF 81
A-401

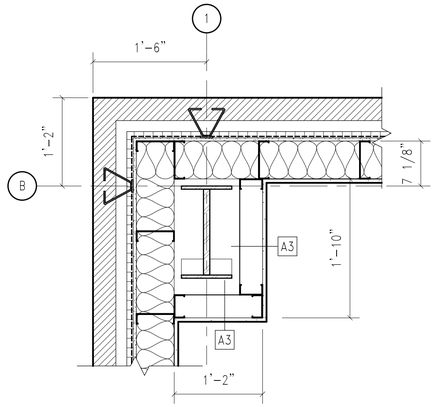

PLAN DETAIL (C1)
1" = 1'-0" — A-101

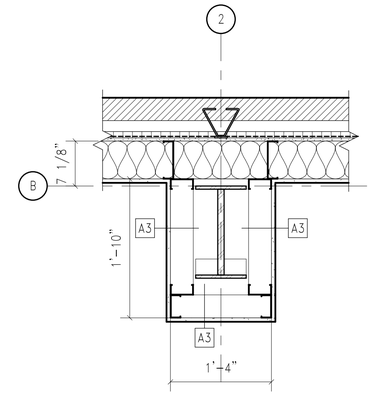

PLAN DETAIL (C2)
1" = 1'-0" — A-101

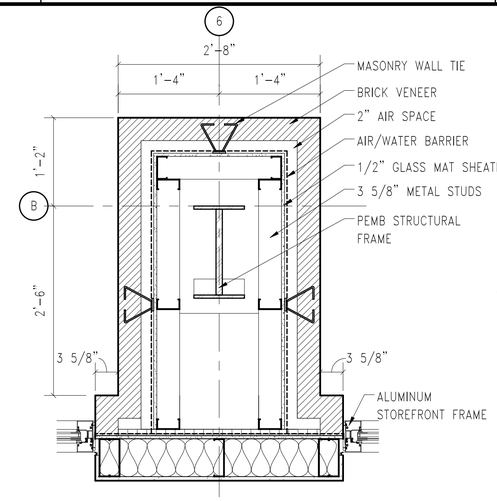

PLAN DETAIL (C3)
1" = 1'-0" — A-101, A-503

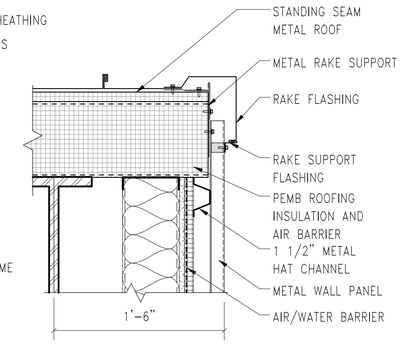

RAKE TRIM DETAIL (C4)
1 1/2" = 1'-0" — A-103, A-302

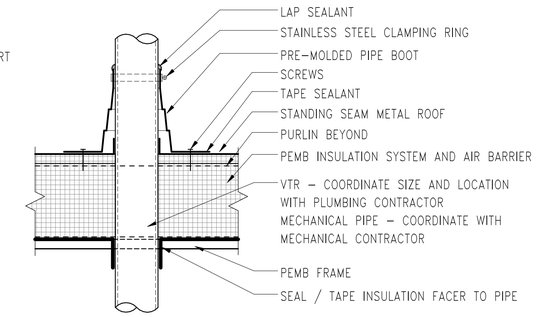

PIPE / VENT THRU ROOF DETAIL (C5)
1 1/2" = 1'-0" — A-103, A-201

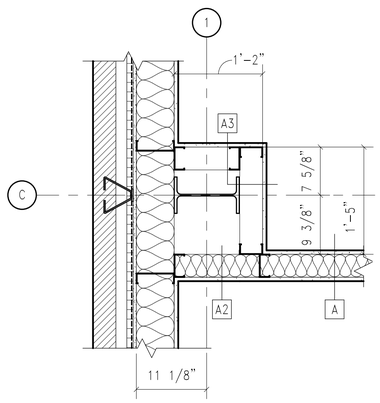

PLAN DETAIL (B1)
1" = 1'-0" — A-101

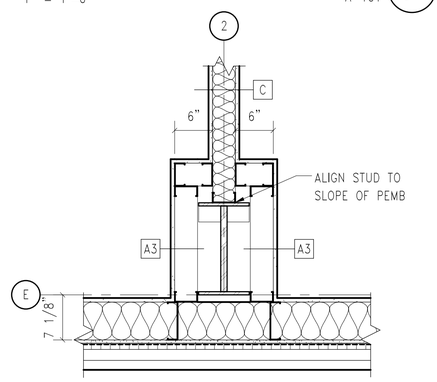

PLAN DETAIL (B2)
1" = 1'-0" — A-101

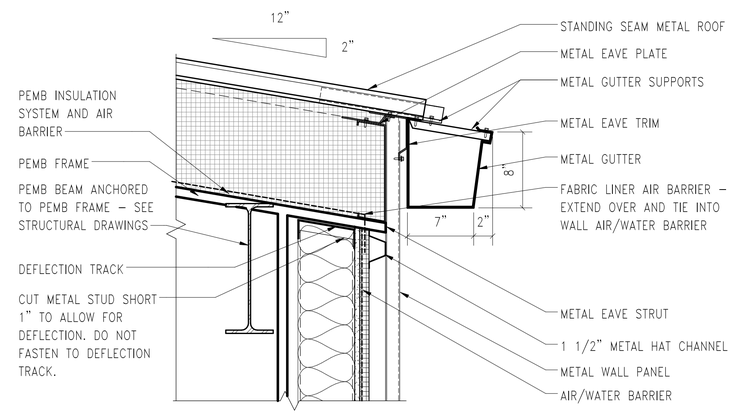

GUTTER/FASCIA DETAIL (B4)
1 1/2" = 1'-0" — A-103, A-301, A-302

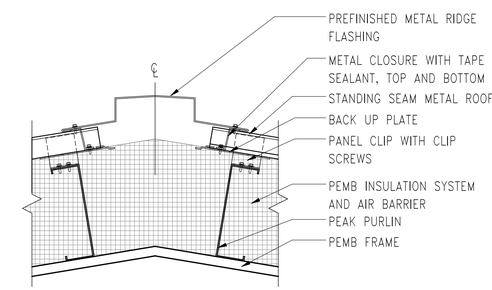

RIDGE DETAIL (B5)
1 1/2" = 1'-0" — A-103, A-201

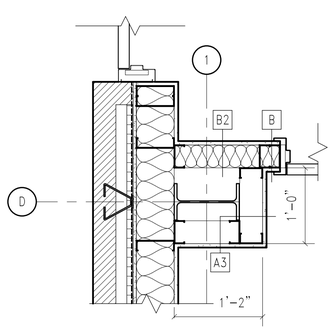

PLAN DETAIL (A1)
1" = 1'-0" — A-101

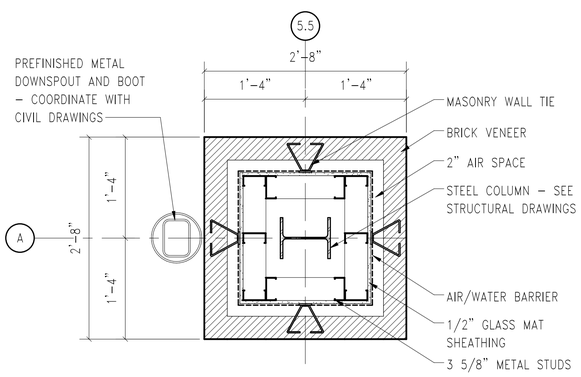

PLAN DETAIL (A2)
1" = 1'-0" — A-101

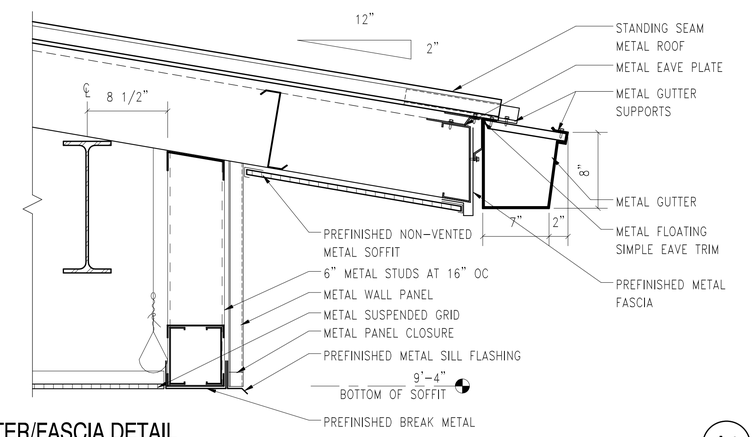

GUTTER/FASCIA DETAIL (A4)
1 1/2" = 1'-0" — A-301

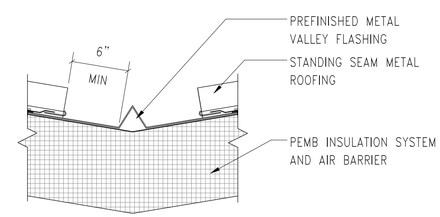

VALLEY DETAIL (A5)
1 1/2" = 1'-0" — A-103

SCALE: 1" = 1'-0" (0, 6", 1', 2')

SCALE: 1 1/2" = 1'-0" (0, 4", 8", 1'-4")

MARK	DATE	DESCRIPTION	NO.

NAVFAC

COMMONWEALTH OF VIRGINIA — JOSEPH D. BOVEE — LIC. NO. 008802 — 6/03/16 — ARCHITECT — SEAL

HBA — A/E INFO

APPROVED

FOR COMMANDER NAVFAC ACTIVITY

SATISFACTORY TO DATE

DES	JDB	DRW	DAS	CHK	WMS

PM

BRANCH MANAGER

CHIEF ENG/ARCH

FIRE PROTECTION

DEPARTMENT OF THE NAVY — NAVAL FACILITIES ENGINEERING COMMAND — NAVAL FACILITIES ENGINEERING COMMAND — NAVAL STATION – NORFOLK, VIRGINIA — NORTH CAROLINA IPT — MCB CAMP LEJEUNE — JACKSONVILLE, NC

P-1475 CULTURAL ASSIMILATION FACILITY

DETAILS

SCALE:	GRAPHIC
EPROJECT NO.:	1386337
CONSTR. CONTR. NO.	N40085-10-D-5301
NAVFAC DRAWING NO.	12711907
SHEET	35 OF 81

A-501

DRAWFORM REVISION: 10 MAY 2014

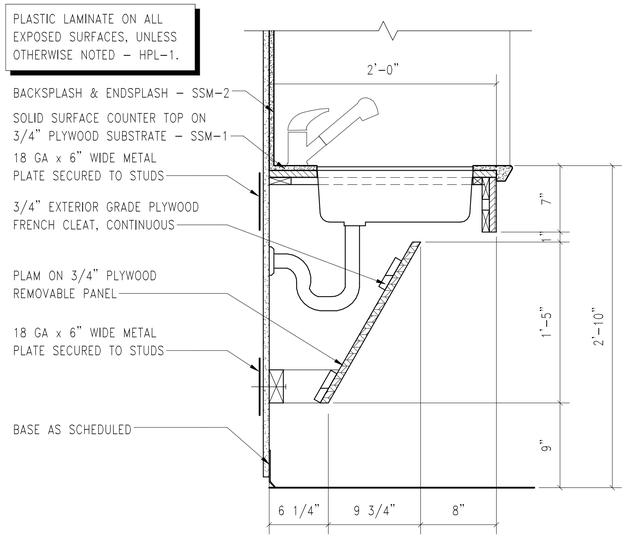

CASEWORK SECTION (C3)
1 1/2" = 1'-0" — A-401

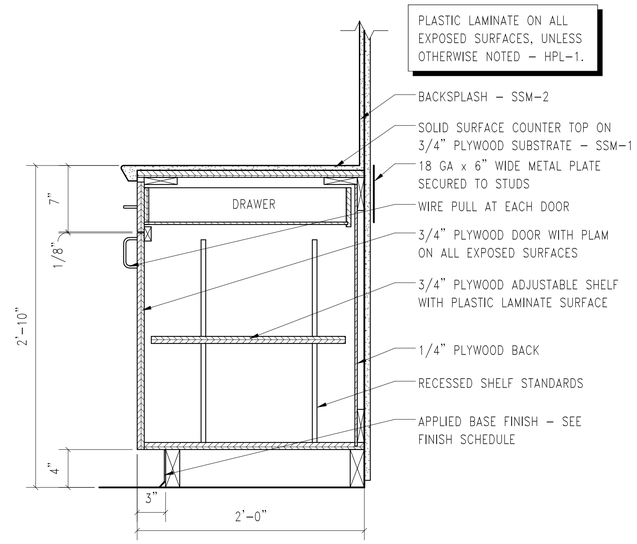

CASEWORK SECTION (C4)
1 1/2" = 1'-0" — A-401

COORDINATE SIZES AND LOCATION OF LOUVERS WITH MECHANICAL DRAWINGS

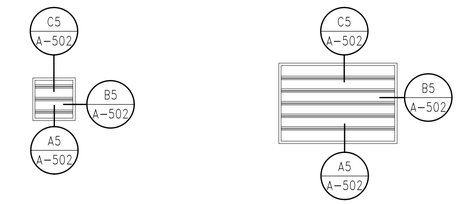

LOUVERS
NOT TO SCALE

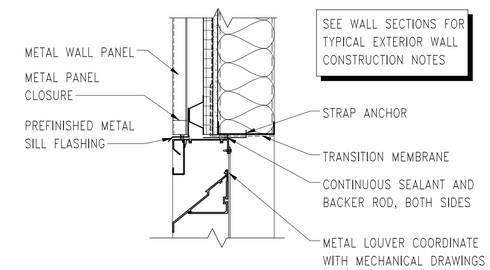

LOUVER HEAD (C5)
1 1/2" = 1'-0" — A-502

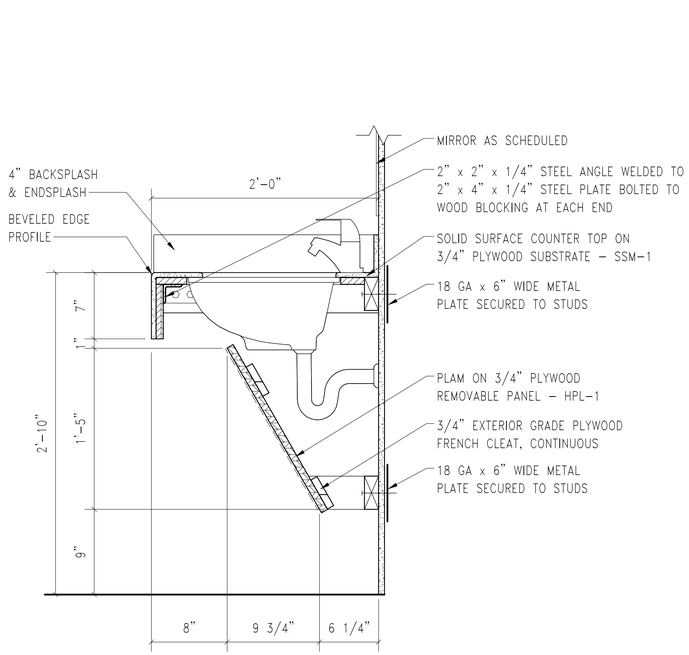

CASEWORK SECTION (A3)
1 1/2" = 1'-0" — A-401

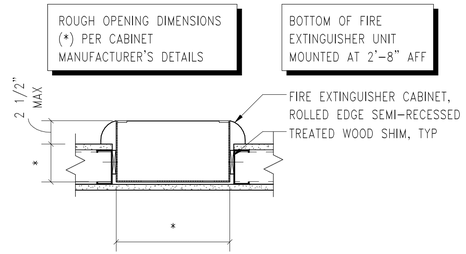

SEMI-RECESSED FIRE EXTINGUISHER (B4)
1 1/2" = 1'-0" — A-001

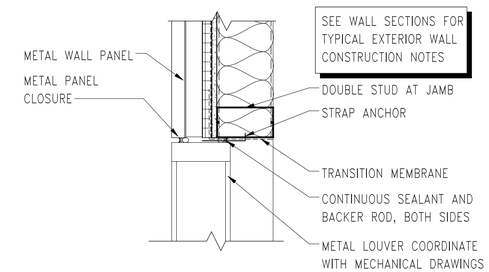

LOUVER JAMB (B5)
1 1/2" = 1'-0" — A-502

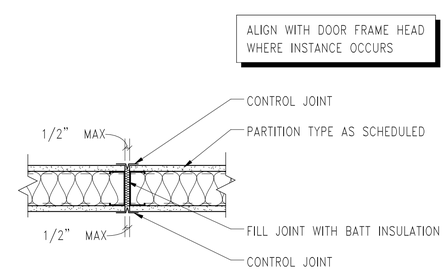

CONTROL JOINT DETAIL (A4)
1 1/2" = 1'-0" — A-001

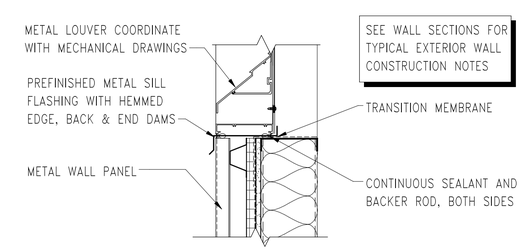

LOUVER SILL (A5)
1 1/2" = 1'-0" — A-502

SCALE: 1/2" = 1'-0" (0, 1', 2', 4') SCALE: 1 1/2" = 1'-0" (0, 4", 8", 1'-4")

NO.	DESCRIPTION	DATE

NAVFAC

COMMONWEALTH OF VIRGINIA — JOSEPH D. BOVEE — LIC. NO. 008802 — 6/03/16 — ARCHITECT — SEAL

HBA — A/E INFO

APPROVED
FOR COMMANDER NAVFAC
ACTIVITY
SATISFACTORY TO DATE
DES JDB | DRW DAS | CHK WMS
PM
BRANCH MANAGER
CHIEF ENG/ARCH
FIRE PROTECTION

DEPARTMENT OF THE NAVY — NAVAL FACILITIES ENGINEERING COMMAND — NAVAL FACILITIES ENGINEERING COMMAND, NAVAL STATION – NORFOLK, VIRGINIA
NORTH CAROLINA IPT — MCB CAMP LEJEUNE — JACKSONVILLE, NC
P-1475 CULTURAL ASSIMILATION FACILITY
DETAILS

SCALE: GRAPHIC
EPROJECT NO.: 1386337
CONSTR. CONTR. NO. N40085-10-D-5301
NAVFAC DRAWING NO. 12711908
SHEET 36 OF 81
A-502

DRAWFORM REVISION: 10 MAY 2014

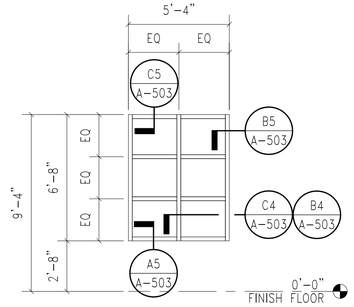

STOREFRONT ELEVATION (A)
1/4" = 1'-0"

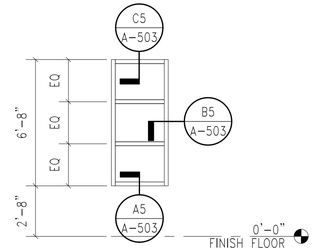

STOREFRONT ELEVATION (B)
1/4" = 1'-0"

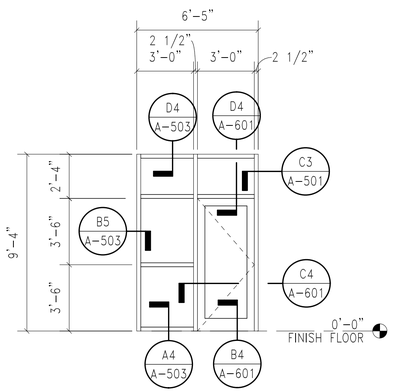

STOREFRONT ELEVATION (C)
1/4" = 1'-0"

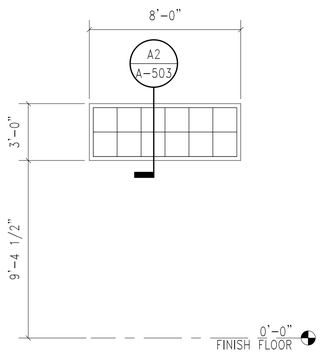

TRANSLUCENT WINDOW ELEVATION (D)
1/4" = 1'-0"

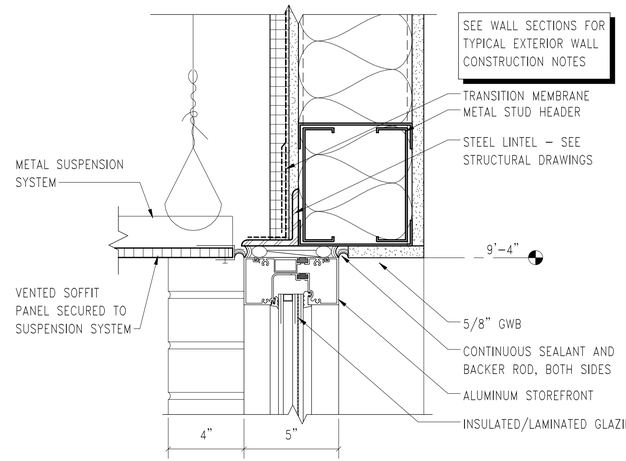

STOREFRONT HEAD (D4)
3" = 1'-0"
A-503

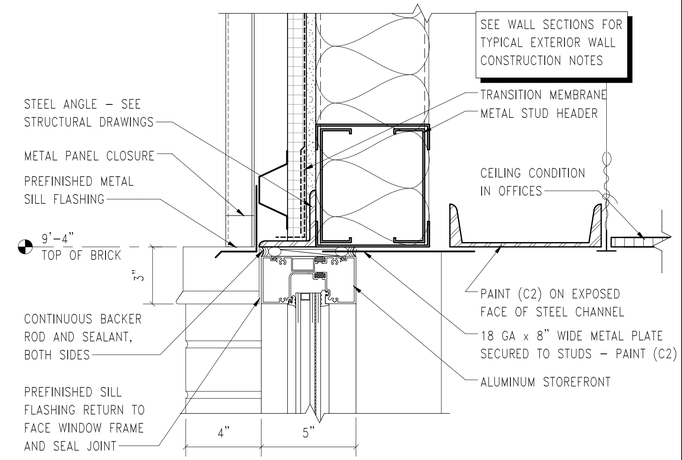

STOREFRONT HEAD (C5)
3" = 1'-0"
A-301, A-503

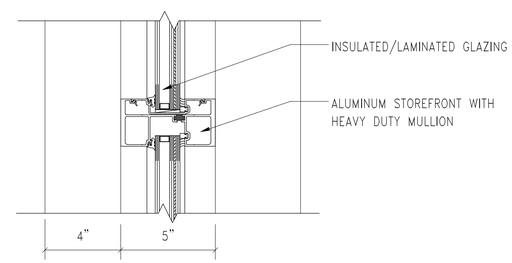

STOREFRONT MULLION (C4)
3" = 1'-0"
A-503

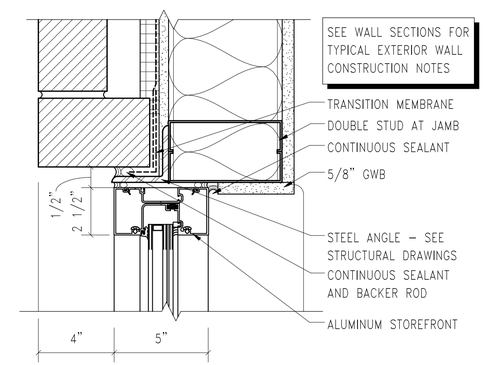

STOREFRONT JAMB (B5)
3" = 1'-0"
A-301, A-503

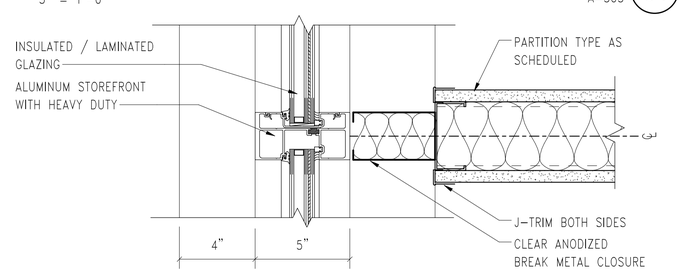

STOREFRONT MULLION - OFFICE 108/109 & 121/122 (B4)
3" = 1'-0"
A-101

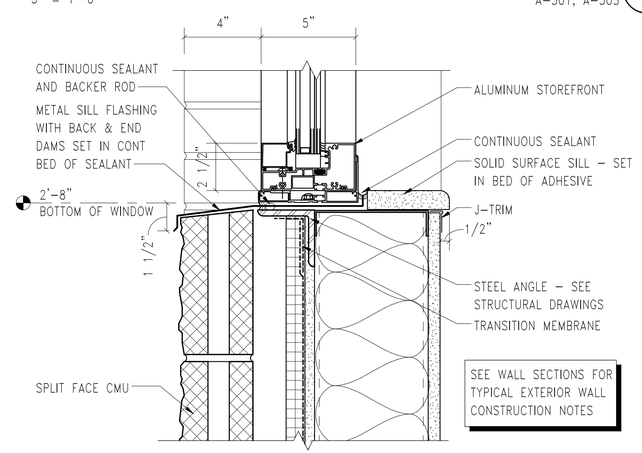

STOREFRONT SILL (A5)
3" = 1'-0"
A-301, A-503

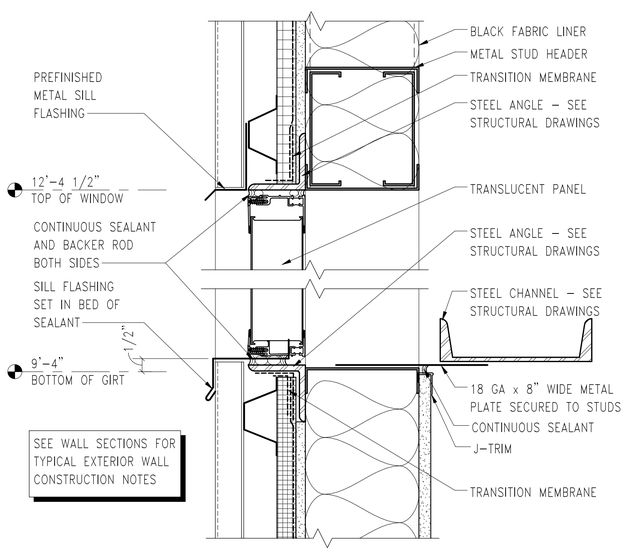

TRANSLUCENT PANEL HEAD/SILL (A2)
3" = 1'-0"
A-302, A-503

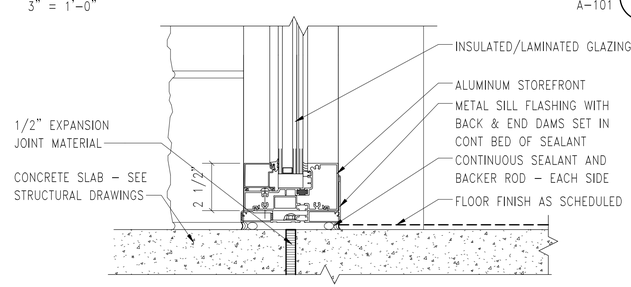

STOREFRONT SILL (A4)
3" = 1'-0"
A-503

SCALE: 3" = 1'-0" 0 2" 4" 8"

SCALE: 1/4" = 1'-0" 0 2' 4' 8'

NAVFAC

COMMONWEALTH OF VIRGINIA
JOSEPH D. BOVEE
LIC. NO. 008802
2/03/16
ARCHITECT

HBA

APPROVED
FOR COMMANDER NAVFAC
ACTIVITY
SATISFACTORY TO DATE
DES JDB DRW DAS CHK WMS
PM
BRANCH MANAGER
CHIEF ENG/ARCH
FIRE PROTECTION

DEPARTMENT OF THE NAVY
NAVAL FACILITIES ENGINEERING COMMAND
NORTH CAROLINA IPT
NAVAL FACILITIES ENGINEERING COMMAND
NAVAL STATION – NORFOLK, VIRGINIA
JACKSONVILLE, NC
MCB CAMP LEJEUNE
P-1475 CULTURAL ASSIMILATION FACILITY
DETAILS

SCALE: GRAPHIC
EPROJECT NO.: 1386337
CONSTR. CONTR. NO. N40085-10-D-5301
NAVFAC DRAWING NO. 12711909
SHEET 37 OF 81
A-503

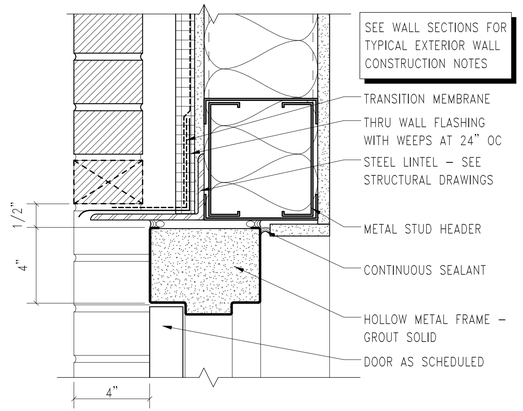

DOOR HEAD - EXTERIOR (C2)

3" = 1'-0" A-601

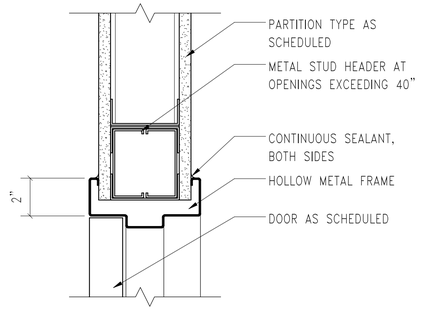

DOOR HEAD - GWB (D3)

3" = 1'-0" A-601

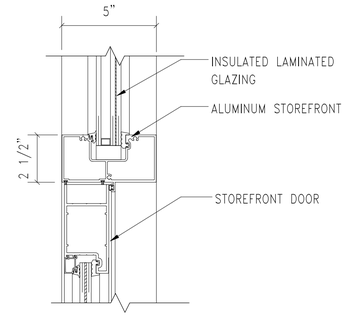

DOOR HEAD - STOREFRONT (D4)

3" = 1'-0" A-503, A-601

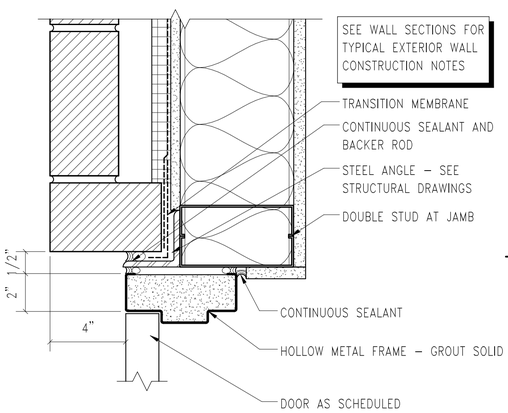

DOOR JAMB - EXTERIOR (B2)

3" = 1'-0" A-601

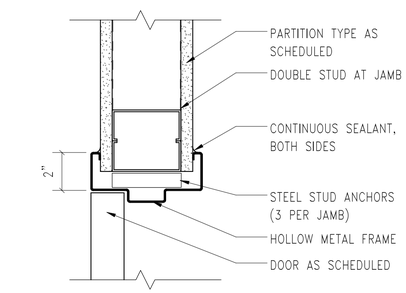

DOOR JAMB - GWB (C3)

3" = 1'-0" A-601

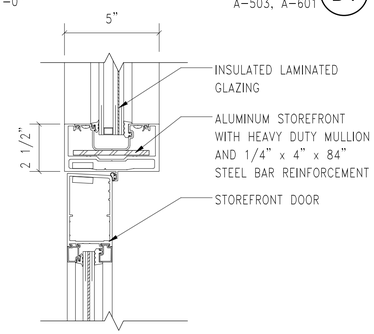

DOOR JAMB - STOREFRONT (C4)

3" = 1'-0" A-503, A-601

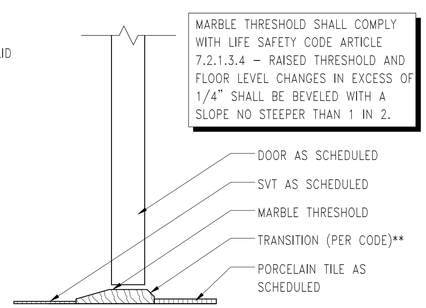

DOOR SILL - MARBLE (B3)

3" = 1'-0" A-601

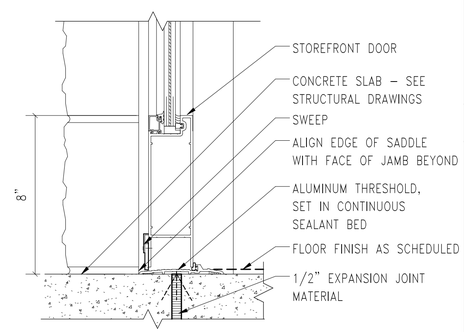

DOOR SILL - STOREFRONT (B4)

3" = 1'-0" A-503, A-601

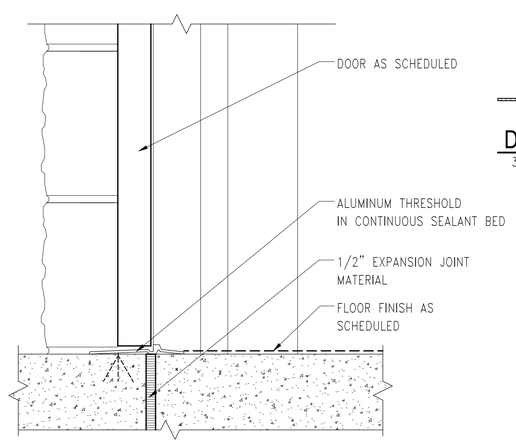

DOOR SILL - EXTERIOR (A2)

3" = 1'-0" A-601

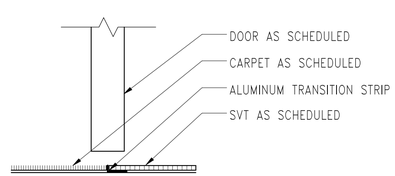

DOOR SILL - CARPET/SVT (A3)

3" = 1'-0" A-601

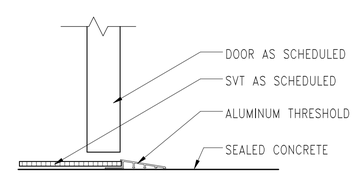

DOOR SILL (A4)

3" = 1'-0" A-601

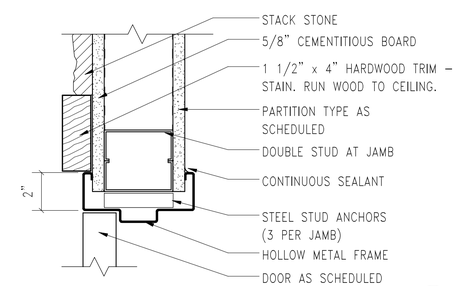

DOOR JAMB (A5)

3" = 1'-0" A-601

DOOR SCHEDULE

DOOR NUMBER	DOOR SIZE WIDTH	DOOR SIZE HEIGHT	DOOR SIZE THICKNESS	DOOR MATERIAL	DOOR TYPE	DOOR PAIR (PR) SINGLE (S)	DOOR GLAZING	FRAME MATERIAL	FRAME TYPE	FRAME DETAILS HEAD	FRAME DETAILS JAMB	FRAME DETAILS SILL	HARDWARE SET	REMARKS
100A	3'-0"	7'-0"	1 3/4"	ALUM	B	S	LGL	–	–	D4	C4	B4	1	–
100B	3'-0"	7'-0"	1 3/4"	ALUM	B	S	LGL	–	–	D4	C4	B4	1	–
101	3'-4"	7'-0"	1 3/4"	GHM	A	S	–	GHM	F-2	C2	B2	A2	2	–
102	3'-4"	7'-0"	1 3/4"	GHM	A	S	–	GHM	F-2	C2	B2	A2	2	–
103	3'-0"	7'-0"	1 3/4"	WD	A	S	–	HM	F-1	D3	C3	A4	3	–
104	3'-0"	7'-0"	1 3/4"	WD	A	S	–	HM	F-1	D3	C3	B3	4	1
105	3'-0"	7'-0"	1 3/4"	WD	C	S	TGL	HM	F-1	D3	C3	A3	5	–
106	3'-4"	7'-0"	1 3/4"	GHM	A	S	–	GHM	F-2	C2	B2	A2	1	–
108	3'-0"	7'-0"	1 3/4"	WD	A	S	–	HM	F-1	D3	C3	–	6	–
109	3'-0"	7'-0"	1 3/4"	WD	A	S	–	HM	F-1	D3	C3	–	6	–
110	3'-0"	7'-0"	1 3/4"	WD	C	S	TGL	HM	F-1	D3	C3	A3	5	–
111	3'-0"	7'-0"	1 3/4"	WD	C	S	TGL	HM	F-1	D3	C3	A3	5	–
112	3'-0"	7'-0"	1 3/4"	WD	C	S	TGL	HM	F-1	D3	C3	A3	5	–
113	3'-0"	7'-0"	1 3/4"	WD	C	S	TGL	HM	F-1	D3	C3	A3	5	–
114	3'-0"	7'-0"	1 3/4"	WD	A	S	–	HM	F-1	D3	A5 & C3	B3	7	–
116	3'-0"	7'-0"	1 3/4"	WD	A	S	–	HM	F-1	D3	A5 & C3	B3	7	–
117	3'-0"	7'-0"	1 3/4"	WD	C	S	TGL	HM	F-1	D3	C3	A3	5	–
118	3'-0"	7'-0"	1 3/4"	WD	C	S	TGL	HM	F-1	D3	C3	A3	5	–
119	3'-0"	7'-0"	1 3/4"	WD	C	S	TGL	HM	F-1	D3	C3	A3	5	–
120	3'-0"	7'-0"	1 3/4"	WD	C	S	TGL	HM	F-1	D3	C3	A3	5	–
121	3'-0"	7'-0"	1 3/4"	WD	A	S	–	HM	F-1	D3	C3	–	6	–
122	3'-0"	7'-0"	1 3/4"	WD	A	S	–	HM	F-1	D3	C3	–	6	–
124	3'-4"	7'-0"	1 3/4"	GHM	A	S	–	GHM	F-2	C2	B2	A2	1	–
125	3'-0"	7'-0"	1 3/4"	WD	C	S	TGL	HM	F-1	D3	C3	A3	5	–
126	3'-0"	7'-0"	1 3/4"	WD	A	PR	–	HM	F-1	D3	C3	–	8	–

DOOR SCHEDULE REMARKS

1. UNDERCUT DOOR – COORDINATE WITH MECHANICAL DRAWINGS.

DOOR SCHED. ABBREVIATIONS

ALUM	ALUMINUM
GHM	GALVANIZED HOLLOW METAL
HM	HOLLOW METAL
LGL	LAMINATED GLAZING
TGL	TEMPERED GLAZING
WD	WOOD

DOOR TYPES

1/4" = 1'-0"

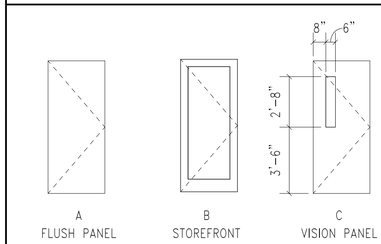

FRAME TYPES

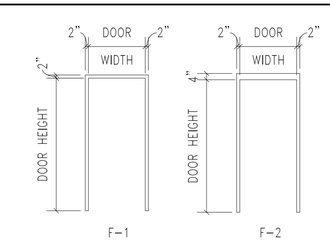

SCALE: 3" = 1'-0" 0 2" 4" 8"

SCALE: 1/4" = 1'-0" 0 2' 4' 8'

NO.	DESCRIPTION	DATE	APPR

NAVFAC

COMMONWEALTH OF VIRGINIA
JOSEPH D. BOVEE
LIC. NO. 008802
2/03/16
ARCHITECT
SEAL

HBA

A/E INFO

APPROVED

FOR COMMANDER NAVFAC

ACTIVITY

SATISFACTORY TO DATE

DES	JDB	DRW	DAS	CHK	WMS

PM

BRANCH MANAGER

CHIEF ENG/ARCH

FIRE PROTECTION

DEPARTMENT OF THE NAVY
NAVAL FACILITIES ENGINEERING COMMAND
NAVAL FACILITIES ENGINEERING COMMAND
NORFOLK, VIRGINIA
NAVAL STATION – NORFOLK, VIRGINIA
NORTH CAROLINA IPT
MCB CAMP LEJEUNE
JACKSONVILLE, NC
P-1475 CULTURAL ASSIMILATION FACILITY
DOOR SCHEDULE AND DETAILS

SCALE:	GRAPHIC
EPROJECT NO.:	1386337
CONSTR. CONTR. NO.	N40085-10-D-5301
NAVFAC DRAWING NO.	12711910
SHEET	38 OF 81

A-601

CRAWFORM REVISION: 10 MAY 2014

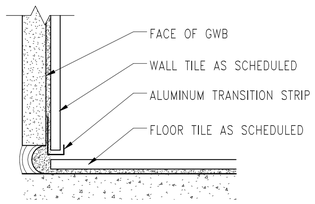

TILE BASE DETAIL (D1)

6" = 1'-0" A-401, A-602

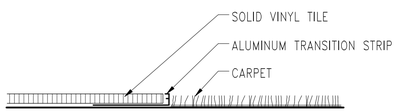

TRANSITION DETAIL (C1)

12" = 1'-0" A-104

FINISH SCHEDULE

NUMBER	NAME	FLOOR FINISH	BASE FINISH	WALL FINISH	CEILING FINISH	CEILING HEIGHT
100	LOBBY	F1	B1	W1	C3	9'-4"
101	MECH	F4	B1	W1, W3	C1	–
102	ELEC	F4	B1	W1, W3	C1	–
103	COMM	F4	B1	W1, W3	C1	–
104	JANITOR	F3	B2	W1, W3, W4	C1	–
105	CLASSROOM	F2	B1	W1, W3, W8	C1	–
106	CORRIDOR	F1	B1	W1, W2, W3, W7	C1, C3	SEE RCP
107	OPEN OFFICE	F2	B1	W1, W2, W3	C1	–
108	OFFICE	F2	B1	W1, W8	C3	9'-4"
109	OFFICE	F2	B1	W1, W8	C3	9'-4"
110	CLASSROOM	F2	B1	W1, W3, W8	C1	–
111	CLASSROOM	F2	B1	W1, W3, W8	C1	–
112	CLASSROOM	F2	B1	W1, W3, W8	C1	–
113	CLASSROOM	F2	B1	W1, W3, W8	C1	–
114	WOMENS	F3	B2	W1, W4, W5, W6	C2	9'-4"
115	LOUNGE	F1	B1	W1, W8	C1	–
116	MENS	F3	B2	W1, W4, W5, W6	C2	9'-4"
117	CLASSROOM	F2	B1	W1, W3, W8	C1	–
118	CLASSROOM	F2	B1	W1, W3, W8	C1	–
119	CLASSROOM	F2	B1	W1, W3, W8	C1	–
120	CLASSROOM	F2	B1	W1, W3, W8	C1	–
121	OFFICE	F2	B1	W1, W8	C3	9'-4"
122	OFFICE	F2	B1	W1, W8	C3	9'-4"
123	OPEN OFFICE	F2	B1	W1, W2, W3	C1	–
124	CORRIDOR	F1	B1	W1, W2, W3, W7	C1, C3	SEE RCP
125	CLASSROOM	F2	B1	W1, W3, W8	C1	–
126	CLOSET	F1	B1	W1, W3	C1	–

DISCLAIMER

INTERIOR FINISHES INDICATED ARE THE APPROVED BASIS OF DESIGN TO CONVEY COLOR, PATTERN, TEXTURE, AND SALIENT CHARACTERISTICS ONLY. THE LISTING OF MANUFACTURER INFORMATION IS NOT INTENDED TO LIMIT THE SELECTION OF PRODUCTS PROVIDED BY OTHER MANUFACTURERS. PRODUCTS MEETING THESE CRITERIA WILL BE CONSIDERED AND MUST BE REVIEWED AND APPROVED BY THE CONTRACTING OFFICER.

INTERIOR COLOR SCHEDULE

FINISH MARK	FINISH ITEM	MANUFACTURER	PRODUCT / COLOR	ITEM #	REMARKS
FLOOR					
F1	SOLID VINYL TILE PLANKS, 9" x 59"	MOHAWK	SECOYA / CONVERSE BASIN	C0009 / 936	–
F2	CARPET TILE	MOHAWK	VEST / PINSTRIPE	GT172 / 859	–
F3	PORCELAIN TILE, 12" x 12"	CROSSVILLE	BASALT / MAFIC	AV294	–
F4	SEALED CONCRETE	–	–	–	
BASE					
B1	VINYL BASE	PATCRAFT	VINYL COVE / SMOKEY	S127V / 00760	–
B2	PORCELAIN WALL TILE – SEE W4	–	–	–	5
WALL					
W1	PAINT	SHERWIN WILLIAMS	GOSSAMER VIEL	SW9165	1, 10
W2	PAINT – ACCENT	SHERWIN WILLIAMS	SLATE TILE	SW7624	1, 3, 10
W3	PAINT – BLACK	SHERWIN WILLIAMS	BLACK MAGIC	SW6991	1
W4	PORCELAIN TILE 12W x 24H – FIELD	CROSSVILLE	BASALT / SILICA	AV291	2, 4, 7
W5	PORCELAIN TILE 12H x 24W – ACCENT	CROSSVILLE	BASALT / MAFIC	AV294	2, 7
W6	PORCELAIN TILE 4H x 24W – BULLNOSE	CROSSVILLE	BASALT / SILICA	AV291	2
W7	STACK STONE THIN VENEER	STONEYARD	COLONIAL TAN LEDGERSTONE	–	6
W8	PAINT – ACCENT	SHERWIN WILLIAMS	MORRIS ROOM GREY	SW0037	3
CEILING					
C1	EXPOSED TO STRUCTURE	–	–	–	1
C2	GYPSUM BOARD – PAINT	SHERWIN WILLIAMS	PURE WHITE	SW7005	–
C3	ACOUSTICAL CEILING TILE, 2' x 2'	ARMSTRONG	FINE FISSURED, HIGH NRC	1756	–
CASEWORK					
HPL-1	PLASTIC LAMINATE	PIONITE	KINGSLEY	WW011	–
SSM-1	SOLID SURFACE (COUNTER & SILLS)	CORIAN	RAIN CLOUD	–	–
SSM-2	SOLID SURFACE (1/4" THICK BACKSPLASH)	CORIAN	GLACIER WHITE	–	–
TOILET PARTITIONS					
TP	TOILET PARTITIONS	SCRANTON PRODUCTS	HDPE / NICKEL, ROTARY BRUSHED	–	–
GROUT					
G1	GROUT – WALLS	CUSTOM BUILDING PRODUCTS	SNOW WHITE	11	–
G2	GROUT – FLOORS	CUSTOM BUILDING PRODUCTS	FUSION PRO / NATURAL GRAY	09	–
DOORS					
D1	DOOR STAIN	VT INDUSTRIES	WHITE MAPLE / RAVINE	RA07	8
WINDOW BLINDS					
WB1	1" BLINDS	BALI	BRUSHED ALUMINUM	121	9

INTERIOR COLOR SCHEDULE REMARKS

1. ALL WALLS AND EXPOSED STRUCTURE AND UNFINISHED EQUIPMENT ABOVE 9'-4" – PAINT BLACK (W3).
2. SEE TYPICAL WALL TILE PATTERN LOCATIONS B3/A-401
3. SEE FINISH PLAN FOR ACCENT PAINT (W2 & W8).
4. JANITOR 104 – PORCELAIN TILE (W4) WAINSCOT FROM FINISH FLOOR TO 5'-0" AFF. PAINT (W1) FROM 5'-0" AFF TO 9'-4" AFF. PAINT (W3) ABOVE 9'-4".
5. WALL TILE RUNS TO FLOOR IN LIEU OF WALL BASE. SEE DETAIL D1/A-602
6. SEE FINISH PLAN FOR STACK STONE (W7) LOCATION. PROVIDE CEMENTITIOUS BOARD BEHIND STONE. SEE DETAIL A1/A-104
7. RUN (W4) WITH 24" BEING THE VERTICAL DIMENSION, RUN (W5) WITH 12" BEING THE VERTICAL DIMENSION.
8. DOOR FRAME PAINT COLOR TO MATCH WALL COLOR IN WHICH IT OCCURS.
9. PROVIDE WINDOW BLINDS FOR ALL TYPE 'A' WINDOWS.
10. PAINT FROM FLOOR TO 9'-4".

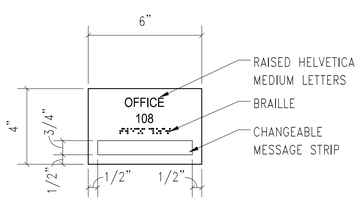

SIGNAGE - TYPE A

3" = 1'-0"

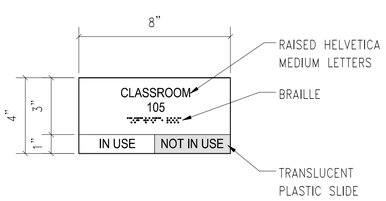

SIGNAGE - TYPE B

3" = 1'-0"

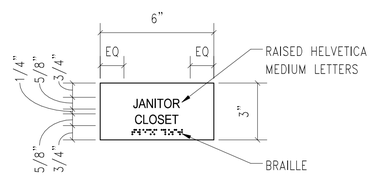

SIGNAGE - TYPE C

3" = 1'-0"

SIGNAGE SCHEDULE

NUMBER	TYPE	TEXT	REMARKS
101	C	MECHANICAL ROOM	1
102	C	ELECTRICAL ROOM	1
103	C	COMM ROOM	1
104	C	JANITOR CLOSET	1
105	B	CLASSROOM	2
108	A	OFFICE	2
109	A	OFFICE	2
110	B	CLASSROOM	2
111	B	CLASSROOM	2
112	B	CLASSROOM	2
113	B	CLASSROOM	2
114	E	WOMEN	1
116	D	MEN	1
117	B	CLASSROOM	2
118	B	CLASSROOM	2
119	B	CLASSROOM	2
120	B	CLASSROOM	2
121	A	OFFICE	2
122	A	OFFICE	2
125	B	CLASSROOM	2
126	C	FIRE PROTECTION	1

SIGNAGE SCHEDULE REMARKS

1. MOUNT CENTERED ON DOOR PANEL.
2. MOUNT 9" FROM FACE OF DOOR FRAME TO EDGE OF SIGNAGE. SEE DETAIL A3/A-602

SIGNAGE GENERAL NOTES

1. RAISED FRP OR PLASTIC FLAT PANEL PAINT – COLOR TO BE SELECTED FROM MANUFACTURER'S STANDARD COLORS PALETTE.
2. ACCESSIBLE SIGNS SHALL COMPLY WITH ICC/ANSI A117.1 SECTION 703.
3. MOUNT 5'-0" AFF TO TOP OF SIGN.
4. SEE FINISH PLAN A-104 FOR SIGNAGE LOCATIONS.

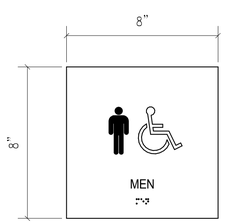

MOUNT CENTERED ON DOOR PANEL

SIGNAGE - TYPE D

3" = 1'-0"

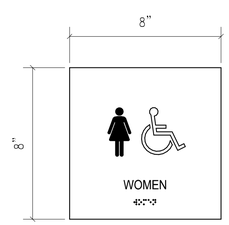

MOUNT CENTERED ON DOOR PANEL

SIGNAGE - TYPE E

3" = 1'-0"

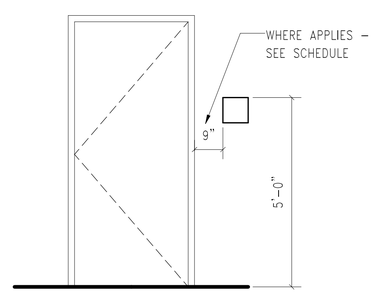

TYPICAL SIGNAGE MOUNTING HEIGHT (A3)

1/2" = 1'-0" A-602

SCALE: 6" = 1'-0" 0 1" 2" 4"

SCALE: 3" = 1'-0" 0 2" 4" 8"

MARK	DATE	DESCRIPTION	INIT

NAVFAC

COMMONWEALTH OF VIRGINIA
JOSEPH D. BOVEE
LIC. NO. 008802
6/03/16
ARCHITECT
SEAL

HBA
A/E INFO

APPROVED
FOR COMMANDER NAVFAC
ACTIVITY
SATISFACTORY TO DATE
DES JDB | DRW DAS | CHK WMS
PM
BRANCH MANAGER
CHIEF ENG/ARCH
FIRE PROTECTION

DEPARTMENT OF THE NAVY
NAVAL FACILITIES ENGINEERING COMMAND
NAVAL FACILITIES ENGINEERING COMMAND
NAVAL STATION – NORFOLK, VIRGINIA
NORTH CAROLINA IPT
MCB CAMP LEJEUNE
JACKSONVILLE, NC
P-1475 CULTURAL ASSIMILATION FACILITY
FINISH / COLOR SCHEDULES AND DETAILS

SCALE: GRAPHIC
EPROJECT NO.: 1386337
CONSTR. CONTR. NO. N40085-10-D-5301
NAVFAC DRAWING NO. 12711911
SHEET 39 OF 81
A-602

CRAFTFORM REVISION: 10 MAY 2014

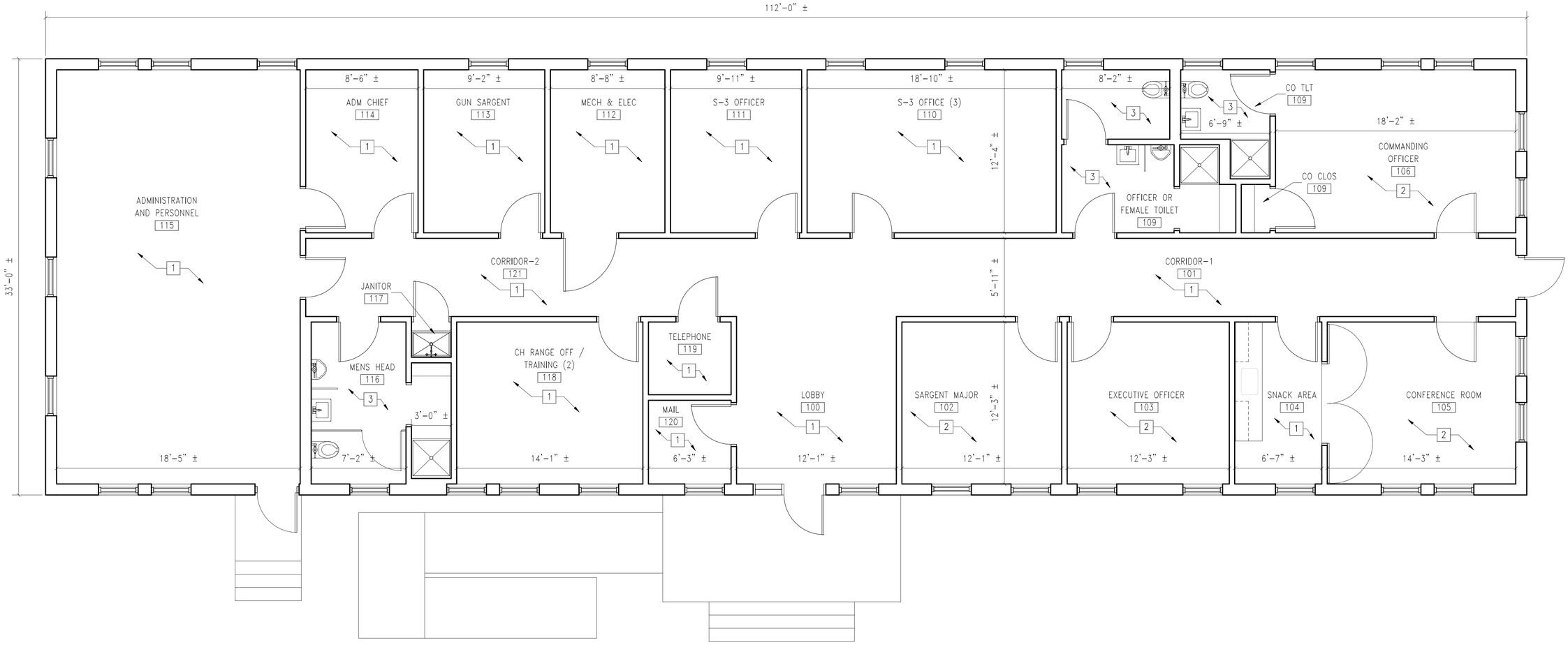

BUILDING RR12 FLOOR PLAN

1/4" = 1'-0"

INTERIOR COLOR SCHEDULE - BID OPTION

FINISH MARK	FINISH ITEM	MANUFACTURER	PRODUCT / COLOR	ITEM #	REMARKS
FLOOR					
F2	CARPET TILE	MOHAWK	VEST / PINSTRIPE	GT172 / 859	–
F5	VINYL ENCHANCED TILE, 12" x 12"	JOHNSONITE AZTERRA	HUMITE	AT121	–
BASE					
B1	VINYL BASE	PATCRAFT	VINYL COVE / SMOKEY	S127V / 00760	–
WALL					
W1	PAINT	SHERWIN WILLIAMS	GOSSAMER VIEL	SW9165	–

WORK NOTES

THIS SHEET ONLY

1. REMOVE EXISTING VCT & BASE AND INSTALL VCT (F5) & BASE (B1)
2. REMOVE EXISTING CARPET & BASE AND INSTALL CARPET (F2) & BASE (B1)
3. THOROUGHLY CLEAN EXISTING CERAMIC TILE FLOOR AND WAINSCOT

GENERAL NOTES

1. PREPARE AND PAINT ALL WALLS IN ALL ROOMS.
2. PREPARE AND PAINT ALL HOLLOW METAL DOOR FRAMES TO MATCH (W1) COLOR.
3. REFER TO SHEET LS701 FOR ADDITIONAL WORK IN THIS BID OPTION.

SCALE: 1/4" = 1'-0" 0 2' 4' 8'

NAVFAC

COMMONWEALTH OF VIRGINIA
JOSEPH D. BOVEE
LIC. NO. 008802
2/03/16
ARCHITECT

HBA

APPROVED
FOR COMMANDER NAVFAC
ACTIVITY
SATISFACTORY TO DATE
DES JDB DRW DAS CHK WMS
PM
BRANCH MANAGER
CHIEF ENG/ARCH
FIRE PROTECTION

DEPARTMENT OF THE NAVY
NAVAL FACILITIES ENGINEERING COMMAND
NAVAL FACILITIES ENGINEERING COMMAND
NAVAL STATION – NORFOLK, VIRGINIA
NORTH CAROLINA IPT
MCB CAMP LEJEUNE
JACKSONVILLE, NC
P-1475 CULTURAL ASSIMILATION FACILITY
BUILDING RR12 FLOOR PLAN – BID OPTION

SCALE: GRAPHIC
EPROJECT NO.: 1386337
CONSTR. CONTR. NO. N40085-10-D-5301
NAVFAC DRAWING NO. 12711912
SHEET 40 OF 81
A-701

LIFE SAFETY CODE ANALYSIS - 2015 EDITION

BASIC BUILDING DESCRIPTION
1. TOTAL BUILDING AREA - APPROX.11,240 SF
2. BUILDING HEIGHT - APPROX. 18'

APPLICABLE CODES
1. 2012 EDITION OF THE INTERNATIONAL BUILDING CODE
2. NFPA 10, STANDARD FOR PORTABLE FIRE EXTINGUISHERS - 2013 EDITION
3. NFPA 13, STANDARD FOR THE INSTALLATION FOR SPRINKLER SYSTEMS 2016 EDITION
4. NFPA 24, INSTALLATION FOR PRIVATE FIRE SERVICE MAINS AND THEIR APPURTENANCES - 2013 EDITION
5. NFPA 70, NATIONAL ELECTRICAL CODE - 2014 EDITION
6. NFPA 72, FIRE ALARM CODE - 2013 EDITION
7. NFPA 90A, STANDARD FOR INSTALLATION OF AIR-CONDITIONING AND VENTILATION SYSTEMS - 2015 EDITION
8. NFPA 101, LIFE SAFETY CODE - 2015 EDITION

FIRE PROTECTION SYSTEMS
1. FIRE SPRINKLER SYSTEM - GENERAL
   1.1. FIRE SPRINKLER SYSTEM PROVIDED THROUGHOUT THE BUILDING, WITH ALLOWABLE OMISSIONS
2. FIRE SPRINKLER SYSTEM REQUIREMENTS
   2.1. HAZARD CLASSIFICATIONS
      2.1.1. HC-1: CLASSROOMS, OFFICES, RESTROOMS, LOUNGE, AND SIMILAR
      2.1.2. HC-2: MECHANICAL ROOM, ELECTRICAL ROOM, COMMUNICATION ROOM, AND SIMILAR
   2.2. FIRE SPRINKLER COVERAGE
      2.2.1. HC-1: 225 SF
      2.2.2. HC-2: 130 SF
   2.3. FIRE SPRINKLER DENSITY
      2.3.1. HC-1: 0.1 GPM/SF
      2.3.2. HC-2: 0.2 GPM/SF
   2.4. FIRE SPRINKLER SYSTEM MINIMUM HYDRAULIC REMOTE AREA
      2.4.1. HC-1: 1,500 SF
      2.4.2. HC-2: 2,500 SF
   2.5. FIRE SPRINKLER HOSE STREAM ALLOWANCE
      2.5.1. HC-1: 250 GPM
      2.5.2. HC-2: 250 GPM
3. PORTABLE FIRE EXTINGUISHERS - GENERAL
   3.1. PORTABLE FIRE EXTINGUISHERS SHALL BE INSTALLED PER NFPA 10

FIRE ALARM/MNS SYSTEM
1. FIRE ALARM /MNS SYSTEM - GENERAL
   1.1. PROVIDE NEW FIRE ALARM DEVICES THROUGHOUT THE AREA AS NECESSARY TO MEET NFPA 72.
   1.2. PROVIDE ADDRESSABLE TYPE DEVICES AND COORDINATE WITH BASE REPORTING SYSTEM. PROVIDE SPEAKER-STROBE DEVICES. PROVIDE BATTERY CAPACITY FOR DEVICES. FIRE ALARM SYSTEM SHALL BE INSTALLED PER NFPA 72.
2. NOTIFICATION
   2.1. FIRE ALARM SYSTEM SHALL INCLUDE VISIBLE ALARM INDICATING APPLIANCES IN PUBLIC AND COMMON AREAS
   2.2. AUDIBLE ALARM INDICATING APPLIANCES SHALL PROVIDE A DISTINCTIVE SOUND WHICH SHALL NOT BE USED FOR ANY PURPOSE OTHER THAN THAT OF A FIRE ALARM/MASS NOTIFICATION SYSTEM
   2.3. THE MINIMUM SOUND PRESSURE LEVELS SHALL BE 15 dBA ABOVE THE AMBIENT SOUND LEVEL IN OFFICE, CLASSROOM, AND LOUNGE AREAS, 90 dBA IN MECHANICAL ROOMS AND 60 dBA IN ALL OTHER ROOMS
   2.4. THE MAXIMUM SOUND PRESSURE LEVEL FOR AUDIBLE INDICATING APPLIANCES SHALL NOT EXCEED 110 dBA AT THE MINIMUM HEARING DISTANCE FROM THE APPLIANCE
3. MANUAL FIRE ALARM ACTIVATION
   3.1. PROVIDE MANUAL FIRE ALARM PULL STATIONS WITHIN 5 FEET OF ALL EXIT DOORS (REFER TO F-101 FOR APPLIANCE LOCATIONS)

OCCUPANCY CLASSIFICATION
THE BUILDING IS BUSINESS AND SHALL BE FULLY SPRINKLERED

OCCUPANCY SEPARATION
THERE ARE NO OCCUPANCY SEPARATIONS.

STRUCTURAL FIRE RESISTIVE RATINGS
1. BEARING & NONBEARING EXTERIOR WALLS - WITH LESS THAN 5' FIRE SEPARATION DISTANCE: 1-HOUR
2. BEARING & NONBEARING EXTERIOR WALLS - WITH 5' AND GREATER AND LESS THAN 10' FIRE SEPARATION DISTANCE: 1-HOUR
3. BEARING & NONBEARING WALLS - WITH 10' OR MORE FIRE SEPARATION DISTANCE: 0-HOUR
4. BEARING WALLS - INTERIOR: 0-HOUR
5. NONBEARING WALLS - INTERIOR: 0-HOUR
6. STRUCTURAL FRAME: 0-HOUR
7. FLOOR CONSTRUCTION: 0-HOUR
8. ROOF CONSTRUCTION: 0-HOUR

INTERIOR FINISH
1. ROOMS AND ENCLOSED SPACES
   1.1. CLASS A OR B /AUTOMATIC FIRE SPRINKLER PROTECTION
2. FLOOR FINISH
   2.1. SHALL HAVE A MINIMUM CRITICAL RADIANT FLUX RATING OF 0.1 W/cm²
3. CLASSIFICATIONS (SECTION 10.2.3.4)
   3.1. INTERIOR WALL FINISH - FLAME SPREAD INDEX
      3.1.1. CLASS A: 0 - 25
      3.1.2. CLASS B: 26 - 75
      3.1.3. CLASS C: 76 - 200
   3.2. INTERIOR WALL FINISH - FINISH DEVELOPED INDEX
      3.2.1. CLASS A: 0 -450
      3.2.2. CLASS B: 0 -450
      3.2.3. CLASS C: 0 -450

MEANS OF EGRESS
1. EGRESS COMPONENTS
   1.1. DOORS
      1.1.1. MINIMUM CLEAR WIDTH: 32 INCHES
      1.1.2. SWING IN DIRECTION OF EGRESS TRAVEL WHEN SERVING AN OCCUPANT LOAD GREATER THAN 50 PERSONS
      1.1.3. SWING IN DIRECTION OF EGRESS TRAVEL WHEN USED IN AN EXIT ENCLOSURE OF WHERE SERVING A HIGH HAZARD CONTENTS AREA
      1.1.4. DOORS ARE TO BE ARRANGED TO BE OPENED READILY FROM THE EGRESS SIDE WHENEVER THE BUILDING IS OCCUPIED. LOCKS, IF PROVIDED, ARE NOT TO REQUIRE THE USE OF A KEY, A TOOL, OR SPECIAL KNOWLEDGE OR EFFORT FOR OPERATION FROM THE EGRESS SIDE
      1.1.5. THE PANIC HARDWARE OR FIRE EXIT HARDWARE IS TO CONSIST OF CROSS BARS OR PUSH PADS LOCATED NOT LESS THAN 34 INCHES OR MORE THAN 48 INCHES ABOVE THE FLOOR. THE ACTUATING PORTION OF THE CROSS BAR OR PUSH PADS SHALL EXTEND THE FULL-WIDTH OF THE DOOR.

MARKING OF MEANS OF EGRESS
   1.1. SIGNAGE
      1.1.1. EXITS SHALL BE MARKED BY AN APPROVED SIGN READILY VISIBLE FROM ANY DIRECTION OF EXIT ACCESS
      1.1.2. SIGN PLACEMENT SHALL BE SUCH THAT NO POINT IN THE EXIT ACCESS CORRIDOR IS MORE THAN 100 FEET FROM THE NEAREST EXTERNALLY ILLUMINATED SIGN
      1.1.3. A DIRECTIONAL SIGN READING "EXIT" WITH A DIRECTION INDICATOR SHOWING THE DIRECTION OF TRAVEL SHALL BE PLACED IN EVERY LOCATION WHERE THE DIRECTION OF TRAVEL TO REACH THE NEAREST EXIT IS NOT APPARENT
   1.2. ILLUMINATION
      1.2.1. EVERY EXIT SIGN SHALL BE ILLUMINATED AT ALL TIMES. THE ILLUMINATION SHALL BE FOR 90 MINUTES IN THE CASE OF A PRIMARY POWER LOSS
      1.2.2. EXIT SIGNS THAT ARE EXTERNALLY ILLUMINATED SHALL HAVE AN INTENSITY NOT LESS THAN 5 FT-CANDLES
2. EMERGENCY LIGHTING
   2.1. EMERGENCY LIGHTING
      2.1.1. EMERGENCY LIGHTING REQUIRED FOR EXIT ACCESS, EXITS AND EXIT DISCHARGE AT ALL TIMES THAT THE BUILDING IS OCCUPIED
      2.1.2. EMERGENCY ILLUMINATION IS REQUIRED TO BE AS FOLLOWS
         2.1.2.1. ILLUMINATION OF MEANS OF EGRESS SHALL BE FOR A DURATION OF 90 MINUTES AND THE EMERGENCY POWER SHALL BE FROM BATTERIES, UNTIL EQUIPMENT OR GENERATOR START UP
         2.1.2.2. REQUIRED ILLUMINATION SHALL BE ARRANGED SO THAT INITIAL ILLUMINATION IS AT LEAST AN AVERAGE OF 1 FT-CANDLE AND A MINIMUM AT ANY POINT OF 0.1 FT-CANDLE
         2.1.2.3. A DECLINE TO 0.6 FT-CANDLE AVERAGE ILLUMINATION AT THE FLOOR WITH A MINIMUM 0.06 FT-CANDLE AT ANY POINT IS PERMITTED AT THE END OF THE EMERGENCY LIGHTING TIME DURATION
         2.1.2.4. A MAXIMUM TO MINIMUM ILLUMINATION UNIFORMITY RATION OF 40:1 SHALL NOT BE EXCEEDED
3. OCCUPANT LOAD FACTORS
   3.1. CLASSROOMS: BASED ON A MAXIMUM FOR LESS CONCENTRATED USE TO MAXIMUM USE OF ROOM.
   3.2. OFFICE & SIMILAR: 100 SQ. FT. PER PERSON
   3.3. COMMUNICATION, ELECTRICAL, MECHANICAL, SPRINKLER RISER: 300 SQ. FT. PER PERSON
4. CAPACITY OF MEANS OF EGRESS
   4.1. EGRESS WIDTH REQUIRED PER PERSON
      4.1.1. HORIZONTAL EGRESS TRAVEL: 0.2 INCHES/PERSON
   4.2. MINIMUM EGRESS WIDTH REQUIRED
      4.2.1. CORRIDORS WITH OCCUPANT LOAD > 50: 44 INCHES
      4.2.2. CORRIDORS WITH OCCUPANT LOAD < 50: 36 INCHES
      4.2.3. CLEAR EXIT DOOR OPENING: 32 INCHES
5. TRAVEL DISTANCE BUSINESS OCCUPANCY
   300 FEET TOTAL TRAVEL
   100 FEET COMMON PATH OF TRAVEL
   50 FEET DEAD-END CORRIDOR
   ALL TRAVEL DISTANCES ARE CODE COMPLIANT. SEE SHEET LS101 FOR ACTUAL VS REQUIRED.

6. NUMBER AND ARRANGEMENT OF MEANS OF EGRESS, INCLUDING EXIT DISCHARGE
   6.1. NUMBER OF EXITS REQUIRED
      6.1.1. SINGLE EXIT ROOMS AND AREAS WITH LIMITED OCCUPANT LOAD AND HAVE IN COMMON PATH OF TRAVEL WITHIN THE ALLOWABLE LIMITS. THE SECOND FLOOR IS ALLOWED ONE EXIT IF THE COMMON PATH OF TRAVEL DOES NOT EXCEED 100 FEET AND THE TOTAL TRAVEL TO THE EXTERIOR DOES NOT EXCEED 100 FEET. THIS IS BASE ON A SPRINKLERED FACILITY.
      6.1.2. MINIMUM FROM ROOMS AND AREAS NOT COMPLYING WITH ABOVE: 2
      6.1.3. ROOMS AND AREAS WITH AN OCCUPANT LOAD OF 501 - 1,000: 3

ARRANGEMENT OF EXITS
      6.1.1. WHERE 2 OR MORE EXITS ARE REQUIRED, THEY MUST BE SPACED APART A MINIMUM OF ⅓ THE LENGTH OF THE MAXIMUM DIAGONAL OF THE BUILDING OR AREA BEING SERVED
      6.1.2. WHERE MORE THAN 2 EXITS OR EXIT ACCESS DOORS ARE REQUIRED, AT LEAST 2 OF THE REQUIRED EXITS OR EXIT ACCESS DOORS ARE TO BE ARRANGED TO COMPLY WITH THE MINIMUM SEPARATION DISTANCE REQUIREMENTS DEFINED ABOVE. THE OTHER EXITS OR EXIT ACCESS DOORS ARE TO BE LOCATED SO THAT IF ONE BECOMES BLOCKED, THE OTHERS REMAIN AVAILABLE.
   6.2. EXIT DISCHARGE
      6.2.1. EXITS SHALL DISCHARGE DIRECTLY TO THE BUILDING EXTERIOR
      6.2.2. THE EXIT DISCHARGE SHALL PROVIDE DIRECT AND UNOBSTRUCTED ACCESS TO A PUBLIC WAY
   6.3. EGRESS THROUGH INTERVENING SPACES
      6.3.1. EGRESS FROM A ROOM OR SPACE IS NOT TO PASS THROUGH ADJOINING OR INTERVENING ROOMS, EXCEPT WHERE SUCH ADJOINING ROOMS OR AREAS ARE ACCESSORY; AND PROVIDE AN UNOBSTRUCTED PATH OF EGRESS TRAVEL TO AN EXIT
      6.3.2. ACCESS TO AN EXIT IS NOT TO BE THROUGH ROOMS OR SPACES SUBJECTED TO LOCKING

INTERNATIONAL BUILDING CODE (2012)

BASIC BUILDING DESCRIPTION AND IBC ALLOWANCES
1. THE BUILDING AREA IS APPROXIMATELY 11,240 SQUARE FEET
2. BUILDING HEIGHT - APPROX.18", ALLOWABLE 55'
3. BUILDING IS ONE STORY
4. BUILDING IS NEW CONSTRUCTION - TYPE IIB
5. THE BUILDING IS CLASSIFIED AS BUSINESS OCCUPANCY AND WILL BE FULLY SPRINKLERED.

OCCUPANCY SEPARATION
NO SEPARATION IS REQUIRED.

OCCUPANCY CLASSIFICATION
1. NEW BUSINESS WITH INCIDENTAL AREAS (MECHANICAL, ELECTRICAL, ETC).
2. OFFICES AND CLASSROOMS ARE CONSIDERED BUSINESS OCCUPANCIES.

TYPE OF CONSTRUCTION
1. TYPE IIB

STRUCTURAL FIRE RESISTIVE RATINGS-NEW CONSTRUCTION TYPE IIB PER TABLE 601
1. PRIMARY STRUCTURAL FRAME: 0 HOURS
2. BEARING WALLS - EXTERIOR: 0 HOURS
3. BEARING WALLS - INTERIOR: 0 HOURS
4. NONBEARING WALLS, PARTITIONS, FLOOR CONSTRUCTION, SECONDARY MEMBERS, AND ROOF CONSTRUCTION: 0 HOURS

EXTERIOR WALLS FIRE RESISTIVE RATINGS BASED ON FIRE SEPERATION DISTANCE PER TABLE 602
1. TYPE IIB - GREATER THAN 30 FEET: 0 HOURS

ALLOWABLE AREA CALCULATION (TYPE IIB CONSTRUCTION)
4. GROUP B
   4.1. ALLOWABLE AREA CALCULATION
      4.1.1. TABULAR AREA: 23,000 SF (TABLE 503)
      4.1.2. AREA INCREASE - SPRINKLER (300%): 69,000 SF (SECTION 506.3)
      4.1.3. AREA INCREASE - FRONTAGE (75%): 17,250 SF (SECTION 506.2)
         4.1.3.1. TOTAL ALLOWABLE AREA: 109,250 SF

DETAILED ALLOWABLE AREA CALCULATIONS
1. Aa=AI+[(AI*If)/100+(AI*Is)/100]
   1.1. AI=23,000 (ALLOWABLE TABULAR AREA PER FLOOR, SF)
   1.2. If=75% (AREA INCREASE DUE TO FRONTAGE)
   1.3. Is=300% (AREA INCREASE DUE TO SPRINKLER PROTECTION)
   1.4. If=100 [F/P-.25]*W/30
      1.4.1. If=75% AREA INCREASE DUE TO FRONTAGE
      1.4.2. F=500 (BUILDING PERIMETER WHICH FRONTS ON A PUBLIC WAY OR OPEN SPACE HAVING 20 FEET OPEN MINIMUM, FT)
      1.4.3. P=500 (PERIMETER OF ENTIRE BUILDING, FT)
      1.4.4. W=30 (WIDTH OF PUBLIC WAY OR OPEN SPACE, FT)

ATLANTIC
FIRE PROTECTION ENGINEERING, INC.
708 S. BATTLEFIELD BLVD., SUITE 201
CHESAPEAKE, VA 23322
www.atlanticfpe.com

SYM	DESCRIPTION	DATE	APPR

NAVFAC

COMMONWEALTH OF VIRGINIA
LORI S. HARRIS
No. 037544
2-3-16
PROFESSIONAL ENGINEER
SEAL

HBA

A/E INFO

APPROVED

FOR COMMANDER NAVFAC

ACTING

SATISFACTORY TO DATE

DES	LSH	DRW	HHE	CHK	LSH
PM				XXX	
BRANCH MANAGER				XXX	
CHIEF ENG/ARCH				XXX	
FIRE PROTECTION				XXX	

DEPARTMENT OF THE NAVY
NAVAL FACILITIES ENGINEERING COMMAND
NAVAL FACILITIES ENGINEERING COMMAND
NORFOLK, VIRGINIA
NAVAL STATION - NORFOLK, VIRGINIA
NORTH CAROLINA DIV
MCB CAMP LEJEUNE
JACKSONVILLE, NC

P-1475 CULTURAL ASSIMILATION FACILITY

LIFE SAFETY AND BUILDING CODE ANALYSIS

SCALE: GRAPHIC
EPROJECT NO.: 1386337
CONSTR. CONTR. NO. N40085-10-D-5301
NAVFAC DRAWING NO. 12711913
SHEET 41 OF 81

LS001

DRAWFORM REVISION: 10 MAY 2014

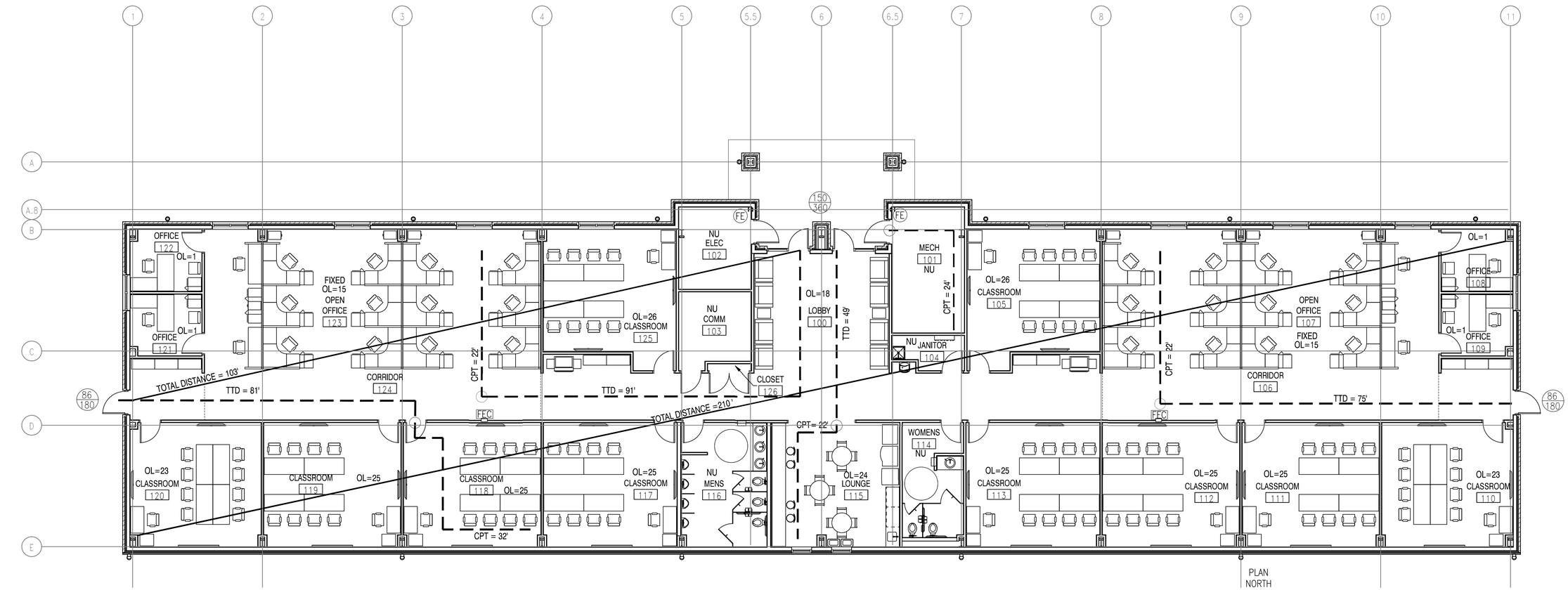

LIFE SAFETY LAYOUT

1/8" = 1'-0"

OCCUPANT LOAD CALCULATION

ROOM NAME	ROOM #	O.L.F.	AREA (SF)	OCCUPANT LOAD
LOBBY	100	NA	268	NORMALLY UNOCCUPIED
COMMUNICATION	101	NA	130	NORMALLY UNOCCUPIED
ELECTRICAL	102	NA	135	NORMALLY UNOCCUPIED
MECHANICAL	103	NA	207	NORMALLY UNOCCUPIED
JANITOR	104	NA	50	NORMALLY UNOCCUPIED
CLASSROOM	105	1/15	386	26
CORRIDOR	106	NA	NA	NORMALLY UNOCCUPIED
OPEN OFFICE	107	FIXED	1050	15
OFFICE	108	1/100	97	1
OFFICE	109	1/100	97	1
CLASSROOM	110	1/15	342	23
CLASSROOM	111	1/15	378	25
CLASSROOM	112	1/15	378	25
CLASSROOM	113	1/15	378	25
WOMENS RESTROOM	114	NA	170	NORMALLY UNOCCUPIED
LOUNGE	115	FIXED	360	18
MENS RESTROOM	116	NA	230	NORMALLY UNOCCUPIED
CLASSROOM	117	1/15	378	25
CLASSROOM	118	1/15	378	25
CLASSROOM	119	1/15	378	25
CLASSROOM	120	1/15	342	23
OFFICE	121	1/100	97	1
OFFICE	122	1/100	97	1
OPEN OFFICE	123	FIXED	1050	15
COORIDOR	124	NA	NA	NORMALLY UNOCCUPIED
CLASSROOM	125	1/15	386	26

LIFE SAFETY LEGEND

- PATH OF EGRESS
- FE — FIRE EXTINGUISHER (BRACKET MOUNTED)
- FEC — FIRE EXTINGUISHER CABINET
- XX — ALLOWABLE OCCUPANCY LOAD
- XX — ACTUAL OCCUPANT LOAD
- FIXED — FIXED OCCUPANCY
- NU — NORMALLY UNOCCUPIED
- OL — OCCUPANT LOAD
- XX SF — AREA (SQUARE FEET)
- CPT — COMMON PATH OF TRAVEL (LIMITED TO 100')
- TTD — TOTAL TRAVEL DISTANCE (ALLOWED/ACTUAL)

SHEET NOTES

1. MOUNT FIRE EXTINGUISHERS PER MANUFACTURERS RECOMMENDATIONS.
2. TOTAL TRAVEL, COMMON PATH OF TRAVEL, AND DEAD-END CORRIDORS COMPLY WITH NFPA 101.
3. TOTAL REQUIRED EXITS IS 2, AND 3 HAVE BEEN PROVIDED. EXITS ARE ADEQUATE.
4. ACTUAL EXIT CAPACITY VERSUS REQUIRED IS ADEQUATE FOR ALL DOORS AND CORRIDORS.
5. EQUIPMENT IN THE ELECTRICAL, MECHANICAL, AND COMMUNICATIONS ROOM DO NOT WARRANT ADDITIONAL RATINGS PER NFPA 101 OR IBC. THE SPRINKLER SYSTEM IS SUFFICIENT TO THE CODE INTENT.
6. OCCUPANT LOADS ARE BASED ON THE WORST CASE SCENARIO, VERSUS THE ACTUAL ANTICIPATED LOAD TO ASSURE THE EGRESS HAS BEEN ADEQUATELY DESIGNED.
7. EXITS ARE REQUIRED TO BE REMOTELY LOCATED. THE BUILDING IS SPRINKLERED, AND MINIMUM DISTANCE BETWEEN EXISTS SHALL BE MORE THAN 1/3 OF THE TOTAL DIAGONAL OF THE BUILDING. TOTAL BUILDING DIAGONAL IS 210 FEET AND EXITS ARE REQUIRED TO BE MORE THAN 210/3. ACTUAL DISTANCE IS 103 FEET. THE LOCATION OF EXITS ARE COMPLIANT FOR REMOTENESS.

afpe
ATLANTIC
FIRE PROTECTION ENGINEERING, INC.
708 S. BATTLEFIELD BLVD., SUITE 201
CHESAPEAKE, VA 23322
www.atlanticfpe.com

GRAPHIC SCALE

SCALE: 1/8" = 1'-0" 0 4' 8' 16'

NOTE: IF THIS DRAWING IS A REDUCTION, GRAPHIC SCALE MUST BE USED.

SYM	DESCRIPTION	DATE	APPR

NAVFAC

COMMONWEALTH OF VIRGINIA
LORI S. HARRIS
No. 037544
2-3-16
PROFESSIONAL ENGINEER
SEAL

HBA
A/E INFO

APPROVED
FOR COMMANDER NAVFAC
ACTIVITY
SATISFACTORY TO DATE

DES	LSH	DRW	HHE	CHK	LSH
PM				XXX	
BRANCH MANAGER				XXX	
CHIEF ENG/ARCH				XXX	
FIRE PROTECTION				XXX	

DEPARTMENT OF THE NAVY
NAVAL FACILITIES ENGINEERING COMMAND
NAVAL FACILITIES ENGINEERING COMMAND
NAVAL STATION – NORFOLK, VIRGINIA
NORTH CAROLINA DPT
MCB CAMP LEJEUNE
JACKSONVILLE, NC
P-1475 CULTURAL ASSIMILATION FACILITY
LIFE SAFETY LAYOUT

SCALE: GRAPHIC
EPROJECT NO.: 1386337
CONSTR. CONTR. NO. N40085-10-D-5301
NAVFAC DRAWING NO. 12711914
SHEET 42 OF 81
LS101

DRAWFORM REVISION: 10 MAY 2014

ACTION	ANNUNCIATION AT LOCAL PANELS			TRANSMIT SIGNALS TO FIRE DEPARTMENT			AUXILIARY FUNCTIONS		EVACUATION SIGNALS			
	AUDIO-VISUAL FIRE ALARM INDICATION BY DEVICE	AUDIO-VISUAL SUPERVISORY INDICATION BY DEVICE	AUDIO-VISUAL TROUBLE INDICATION BY DEVICE	COMMON ALARM SIGNAL PER BUILDING	COMMON SUPERVISORY SIGNAL PER BUILDING	COMMON TROUBLE SIGNAL PER BUILDING	SHUT DOWN ASSOCIATED AHU SUPPLY & RECIRC. FANS	FIRE ALARM TEMPORARILY OVERRIDE	FACILITY FIRE EVACUATION AUDIO-VISUAL SIGNAL	FACILITY CO ANNOUNCEMENT AUDIO-VISUAL SIGNAL	FACILITY ANNOUNCEMENT AUDIO-VISUAL SIGNAL	FACILITY ANNOUNCEMENT LIVE AUDIO-VISUAL SIGNAL
	A	C	D	E	F	G	H	I	J	K	L	M
FIRE ALARMS												
MANUAL FIRE ALARM STATIONS	X			X					X			
SPOT TYPE SMOKE DETECTORS	X			X					X			
DUCT SMOKE DETECTORS		X			X		X					
CARBON MONOXIDE DETECTORS		X			X		X					
WATER FLOW SWITCHES	X			X					X			
MASS NOTIFICATION ALARMS												
LIVE VOICE ANNOUNCEMENT		X			X			X				X
INCOMING MNS MESSAGE		X			X			X				X
SUPERVISORY SIGNALS												
CONTROL VALVE TAMPER SWITCH		X			X							
TROUBLE CONDITIONS												
FIRE ALARM/MNS AC POWER FAILURE			X			X						
FIRE ALARM/MNS SYSTEM LOW BATTERY			X			X						
OPEN CIRCUIT			X			X						
GROUND FAULT			X			X						
NOTIFICATION APPLIANCE CIRCUIT SHORT			X			X						

NOTES:

1. FIRE ALARM SIGNALS AND TROUBLE ALARM SIGNALS SHALL BE CLEARLY DIFFERENTIATED AT THE FIRE ALARM CONTROL PANEL(S).
2. TRANSMITTER SHALL BE PROGRAMMED TO SEND ALL SIGNALS (ALARM, TROUBLE, & SUPERVISORY) TO DISPATCH.
3. EMERGENCY MNS MESSAGES (LIVE & RECORDED) SHALL TEMPORARILY OVERRIDE FIRE ALARM AUDIBLE EVACUATION.
4. UPON ACTIVATION OF CARBON MONOXIDE DETECTOR SIGNAL SHALL BE SENT ON A SEPARATE REPORTING ZONE.

FIRE ALARM/MASS NOTIFICATION MATRIX

FIRE ALARM AND MASS NOTIFICATION LEGEND

FA/MNS	FIRE ALARM AND MASS NOTIFICATION CONTROL PANEL
ANN	FIRE ALARM ANNUNCIATOR PANEL
LOC	LOCAL OPERATING CONTROL
DACT	DIGITAL ALARM COMMUNICATOR TRANSCEIVER
SS	SURGE SUPPRESSOR
CM	CONTROL RELAY MODULE
	WALL MOUNTED WEATHER-PROOF SPEAKER TAPPED AT 2 WATTS
S XX	WALL MOUNTED SPEAKER/STROBE (SUPERSCRIPT INDICATES CANDELA RATING)
S 15	CEILING MOUNTED SPEAKER/STROBE (SUPERSCRIPT INDICATES CANDELA RATING)
	DUCT SMOKE DETECTOR (WITH REMOTE TEST STATION)
	PHOTOELECTRIC SMOKE DETECTOR
CO	CARBON MONOXIDE DETECTOR
F	MANUAL PULL STATION (SEMI-RECESSED)
F	FLOW SWITCH
T	TAMPER SWITCH
HC-1	HAZARD CLASSIFICATION 1 (FM GLOBAL)
HC-2	HAZARD CLASSIFICATION 2 (FM GLOBAL)
XX	DETAIL NUMBER (TYPICAL)
X-XXX	DETAIL DRAWN ON THIS SHEET (TYPICAL)

ATLANTIC
FIRE PROTECTION ENGINEERING, INC.
708 S. BATTLEFIELD BLVD., SUITE 201
CHESAPEAKE, VA 23322
www.atlanticfpe.com

GENERAL NOTES

1. CONTRACTOR SHALL PROVIDE A FIRE ALARM/MNS SYSTEM AND AN AUTOMATIC SPRINKLER SUPPRESSION SYSTEM TO PROVIDE COMPLETE COVERAGE. ALL WORK AND INSTALLATION SHALL CONFORM WITH NFPA 70 (2014), NFPA 13 (2013) AND NFPA 72 (2013).
2. PAINT ALL FIRE ALARM JUNCTION BOXES AND CONDUIT TO MATCH THE ROOM FINISHES, THE INSIDE COVER OF THE JUNCTION BOX MUST BE IDENTIFIED AS "FIRE ALARM" AND CONDUIT SHALL BE PAINTED WITH RED BANDS 3/4 INCH WIDE BY 10 FOOT CENTERS AND AT EACH SIDE OF A FLOOR, WALL, OR CEILING PENETRATION.
3. NO MODIFICATION OF STRUCTURAL MEMBERS IS PERMITTED UNLESS APPROVED BY THE CONTRACTING OFFICER OR STRUCTURAL ENGINEER.
4. ALL COMBINATION SPEAKER/STROBES HAVE A CANDELA RATING OF 15 UNLESS NOTED OTHERWISE.
5. LOCATION OF DEVICES ARE FOR REFERENCE AND DO NOT CONSTITUTE EXACT LOCATIONS. THE FA/MNS CONTRACTOR IS TO PERFORM A COMPLETE LAYOUT THAT MAY INCLUDE ADDITIONAL DEVICES TO MEET ALL REQUIREMENTS. CEILING DEVICES ARE SHOWN FOR CLARITY, NOT SPACING. WALL MOUNTED DEVICES ARE ALLOWED IF THE SPACING REQUIREMENTS ARE MET PER NFPA 72. THE DEVICE LAYOUT SHOWN IS TO SHOW THE INTENT OF THE DESIGN, NOT THE EXACT PLACEMENT. CONTRACTOR IS TO COORDINATE WITH OTHER TRADES TO LOCATE DEVICES AND MEET THE MANUFACTURES REQUIREMENTS FOR SPACING.
6. NOTIFICATION DEVICES IN CLASSROOMS ARE TO MOUNTED NEAR THE DOOR OR ON THE CEILING TO PREVENT CONFLICT WITH WALL MOUNTED FINISHES SUCH AS SCREENS, POSTERS, AND OTHER LEARNING/ PRESENTATION MATERIALS.
7. ALL MATERIALS AND EQUIPMENT SHALL BE UL LISTED OR FM APPROVED FOR FIRE PROTECTION.
8. ALL STROBE DEVICES IN THE SAME FIELD OF VIEW ARE REQUIRED TO BE SYNCHRONIZED PER NPFA 72.
9. THE CONTRACTOR SHALL SUBMIT SHOP DRAWINGS AND SYSTEM CATALOG PRODUCT DATA SHEETS AS REQUIRED. SHOP DRAWINGS SHALL INCLUDE ALL COMPONENTS AND DETAILS REQUIRED BY THE APPLICABLE CODES AND STANDARDS.
10. SPRINKLER PIPING IN EXPOSED FINISHED AREAS THAT DO NOT HAVE SPRINKLERS DIRECTLY CONNECTED TO THEM SHALL BE PAINTED TO MATCH ADJACENT SURFACES WITH 2 INCH WIDE RED ALKYD GLOSS ENAMEL BANDS EVERY 10 FEET AND ON BOTH SIDES OF WALL, CEILING, OR FLOOR PENETRATION.
11. SPRINKLER PIPING IN UNFINISHED AREAS WILL BE PAINTED RED PER SPECIFICATIONS 21 13 13.00 20
12. REFER TO THE MECHANICAL SHEETS FOR EXACT QUANTITY/LOCATION OF DUCT SMOKE DETECTORS. PROVIDE REMOTE TEST STATIONS FOR EACH DETECTOR NOT MORE THAN 5 FEET ABOVE FINISHED FLOOR.
13. COORDINATE FIRE ALARM/MNS DEVICES AND SPRINKLER LAYOUT WITH CEILING ELEVATIONS AND CEILING MOUNTED EQUIPMENT.
14. REFER TO ARCHITECTURAL SHEETS FOR CEILING PLAN. SOME AREAS ARE EXPOSED TO THE ROOF AND SOME AREAS HAVE DROPPED CEILINGS. COORDINATE WITH ELECTRICAL AND MECHANCAL. PROVIDE SPRINKLERS UNDER DUCTWORK AND OTHER CONTINUOUS OBSTRUCTIONS OVER 48" IN WIDTH PER NFPA 13.
15. SPEAKER/STROBES SHALL BE MARKED "ALERT" WITH A CLEAR LENS.
16. FIRE ALARM VOICE MESSAGE SHALL HAVE A FEMALE VOICE.
17. THE MINIMUM REQUIREMENT FOR A COMMON INTELLIGIBILITY SCALE (CIS) VALUE FOR THE NAVY IS 0.7 CIS. OCCUPANTS MUST WALK NO MORE THAN 33 FEET TO FIND A LOCATION WITH ATLEAST THE MINIMUM REQUIRED CIS VALUE WITHIN THE SAME AREA.

SYM	DESCRIPTION	DATE	APPR

NAVFAC

COMMONWEALTH OF VIRGINIA
LORI S. HARRIS
No. 037544
2-3-16
PROFESSIONAL ENGINEER
SEAL

HBA
A/E INFO

APPROVED
FOR COMMANDER NAVFAC
ACTIVITY
SATISFACTORY TO DATE

DES	LSH	DRW	HHE	CHK	LSH
PM				XXX	
BRANCH MANAGER				XXX	
CHIEF ENG/ARCH				XXX	
FIRE PROTECTION				XXX	

DEPARTMENT OF THE NAVY — NAVAL FACILITIES ENGINEERING COMMAND
NAVAL FACILITIES ENGINEERING COMMAND — NAVAL STATION - NORFOLK, VIRGINIA
NORTH CAROLINA OFF — MCB CAMP LEJEUNE — JACKSONVILLE, NC

P-1475 CULTURAL ASSIMILATION FACILITY

FIRE PROTECTION LEGEND AND NOTES

SCALE: GRAPHIC
EPROJECT NO.: 1386337
CONSTR. CONTR. NO. N40085-10-D-5301
NAVFAC DRAWING NO. 12711915
SHEET 43 OF 81

F-001

DRAWFORM REVISION: 10 MAY 2014

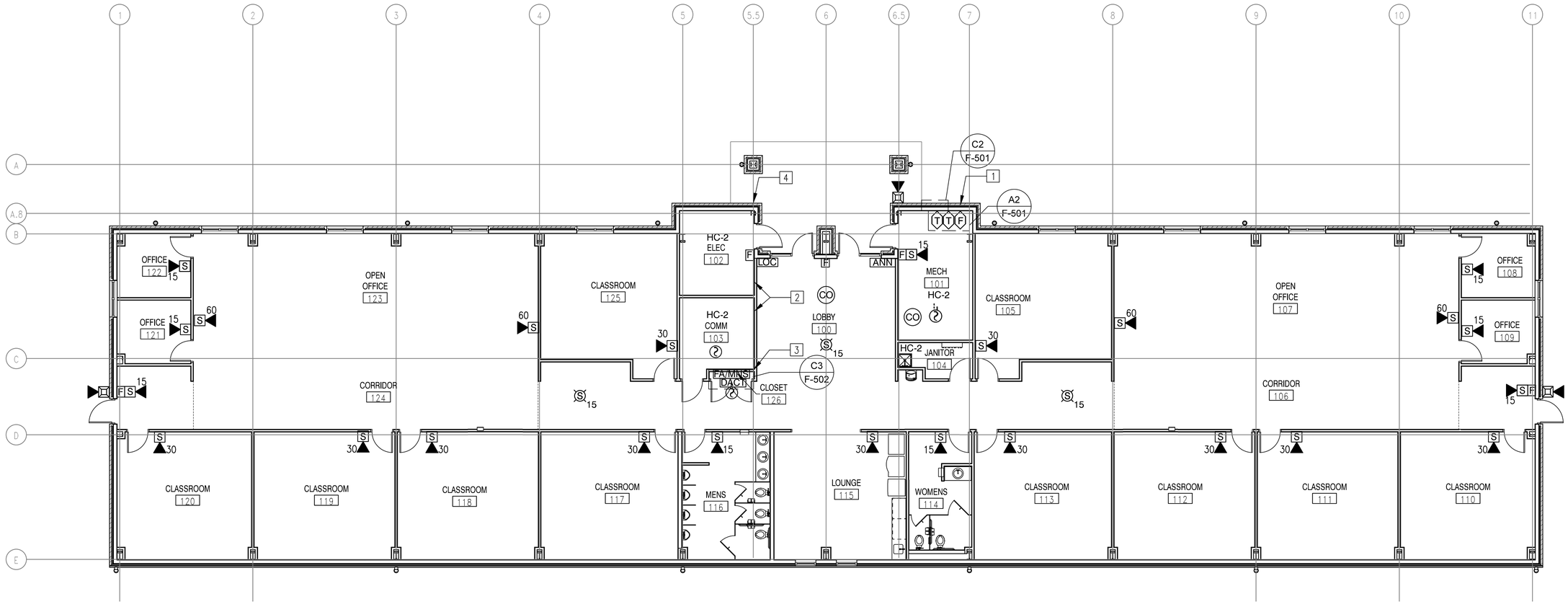

FIRE PROTECTION LAYOUT

1/8" = 1'-0"

SHEET NOTES

1. LOCATION OF DEVICES ARE FOR REFERENCE AND DO NOT CONSTITUTE EXACT LOCATIONS. THE FIRE ALARM CONTRACTOR IS TO PERFORM A COMPLETE LAYOUT THAT MAY INCLUDE ADDITIONAL DEVICES TO MEET ALL REQUIREMENTS.
2. ALL STROBE DEVICES IN THE SAME FIELD OF VIEW ARE REQUIRED TO BE SYNCHRONIZED PER NFPA 72.
3. ALL ROOM SPRINKLER HAZARD CLASSIFICATIONS ARE HC-1, UNLESS OTHERWISE NOTED. THE MECHANICAL, ELECTRICAL, JANITOR'S CLOSET, AND COMMUNICATIONS ROOM ARE CLASSIFIED AS HC-2. SEE SHEET F-501 FOR SPRINKLER SYSTEM DENSITY, DESIGN AREA, AND HYDRANT FLOW DATA. K FACTORS FOR SPRINKLER HEADS ARE AS FOLLOWS: MINIMUM 5.6K FOR HC-1, MINIMUM 80.K FOR HC-2. THIS IS A UFC/FM GLOBAL REQUIREMENT, NOT AN NFPA 13 REQUIREMENT.
4. REFER TO ARCHITECTURAL SHEETS FOR CEILING LAYOUT. COORDINATE SPRINKLER PROTECTION WITH CEILINGS AND PROVIDE PROTECTION BELOW OBSTRUCTIONS CONTINUOUS IN LENGTH OVER 4 FEET WIDE.
5. ALL EQUIPMENT AND FINISHES ABOVE 9' 4" SHALL BE PAINTED FLAT BLACK, WITH THE EXCEPTION OF SPRINKLER, FIRE ALARM, AND MASS NOTIFICATION. ALL FIRE PROTECTION PIPE AND CONDUIT IS TO BE PAINTED RED. SEE ADDITIONAL NOTES ON SHEET F-101.
6. PROVIDE 2 WATT WEATHERPROOF SPEAKERS FOR EXTERIOR LOCATIONS.

KEY NOTES

1. COORDINATE WITH CIVIL SHEET CU101.
2. PROVIDE SIDEWALL SPRINKLER FOR THE ROOMS INDICATED. NO PIPING IS TO BE RUN INTO THE ROOM.
3. COORDINATE FA/MNS PANEL WITH ELECTRICAL DESIGN.
4. KNOX BOX LOCATION

afpe
ATLANTIC
FIRE PROTECTION ENGINEERING, INC.
708 S. BATTLEFIELD BLVD., SUITE 201
CHESAPEAKE, VA 23322
www.atlanticfpe.com

GRAPHIC SCALE

SCALE: 1/8" = 1'-0" 0 4' 8' 16'

NOTE: IF THIS DRAWING IS A REDUCTION, GRAPHIC SCALE MUST BE USED.

SYM	DESCRIPTION	DATE	APPR

NAVFAC

COMMONWEALTH OF VIRGINIA
LORI S. HARRIS
No. 037544
2-3-16
PROFESSIONAL ENGINEER

HBA

A/E INFO

APPROVED

FOR COMMANDER NAVFAC

ACTING

SATISFACTORY TO DATE

DES LSH	DRW HHE	CHK LSH
PM		XXX
BRANCH MANAGER		XXX
CHIEF ENG/ARCH		XXX
FIRE PROTECTION		XXX

DEPARTMENT OF THE NAVY
NAVAL FACILITIES ENGINEERING COMMAND
NAVAL STATION – NORFOLK, VIRGINIA
NORTH CAROLINA DPT
MCB CAMP LEJEUNE
JACKSONVILLE, NC

P-1475 CULTURAL ASSIMILATION FACILITY

FIRE PROTECTION LAYOUT

SCALE: GRAPHIC
EPROJECT NO.: 1386337
CONSTR. CONTR. NO. N40085-10-D-5301
NAVFAC DRAWING NO. 12711916
SHEET 44 OF 81

F-101

DRAWING REVISION 10 MAY 2014

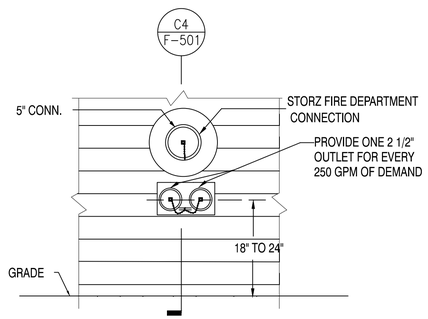

FIRE DEPARTMENT CONNECTION

NOT TO SCALE F-501 C2

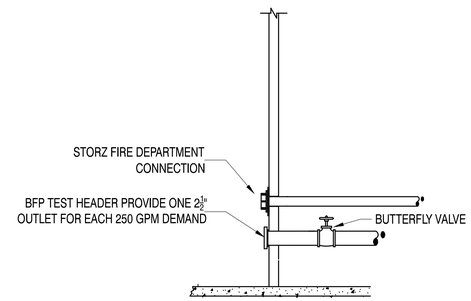

FIRE DEPARTMENT CONNECTION

NOT TO SCALE F-501 C4

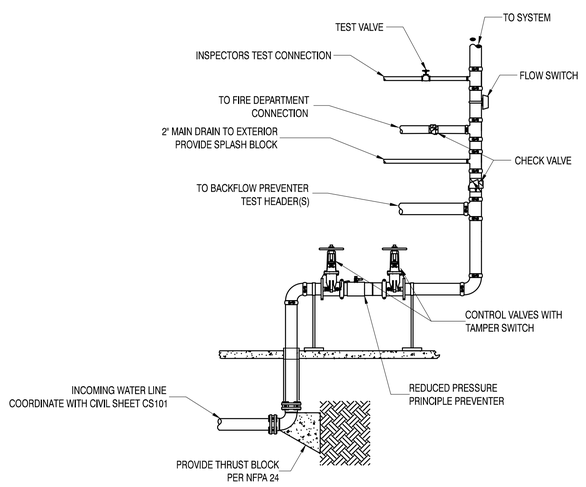

NOTE: RISER DIAGRAM DEVICES AND ATTACHMENTS ARE SHOWN FOR CLARITY, NOT ACTUAL LAYOUT. CONTRACTOR IS TO LAYOUT PER REQUIREMENTS OF NFPA 13 AND ALLOW FOR 4' CLEARANCE IN FRONT OF ALL CONTROL VALVES.

INCOMING SPRINKLER RISER

NOT TO SCALE F-501 A2

FIRE HYDRANT FLOW TEST DATA

PREFORMED ON 11/03/2015

HYDRANT #10-74-12 (STATIC) & HYDRANT #10-75-12 (FLOW)

STATIC	RESIDUAL	FLOW RATE	FLOW RATE (AT 20 PSI)
74 PSI	71 PSI	1385 GPM	6596 GPM

FIRE HYDRANT FLOW TEST

N.A.

HAZARD	DENSITY	DESIGN AREA	COVERAGE	HOSE STREAM ALLOWANCE
HC-1	0.10 GPM/SF	1,500 SF	225 SF	250 GPM
HC-2	0.20 GPM/SF	2,500 SF	130 SF	250 GPM

NOTE: PROVIDE MINIMUM K-FACTOR OF 8.0 FOR HEADS LOCATED IN HC-2 HAZARD AREAS

HAZARD CLASSIFICATIONS

N.A.

ATLANTIC
FIRE PROTECTION ENGINEERING, INC.
708 S. BATTLEFIELD BLVD., SUITE 201
CHESAPEAKE, VA 23322
www.atlanticfpe.com

SYM	DESCRIPTION	DATE	APPR

NAVFAC

COMMONWEALTH OF VIRGINIA
LORI S. HARRIS
No. 037544
2-3-16
PROFESSIONAL ENGINEER

HBA

A/E INFO

APPROVED
FOR COMMANDER NAVFAC
ACTIVITY
SATISFACTORY TO DATE

DES	LSH	DRW	HHE	CHK	LSH
PM				XXX	
BRANCH MANAGER				XXX	
CHIEF ENG/ARCH				XXX	
FIRE PROTECTION				XXX	

DEPARTMENT OF THE NAVY
NAVAL FACILITIES ENGINEERING COMMAND
NAVAL FACILITIES ENGINEERING COMMAND
NAVAL STATION – NORFOLK, VIRGINIA
NORTH CAROLINA DPT
MCB CAMP LEJEUNE
JACKSONVILLE, NC
P-1475 CULTURAL ASSIMILATION FACILITY
FIRE PROTECTION DETAILS

SCALE: GRAPHIC
EPROJECT NO.: 1386337
CONSTR. CONTR. NO. N40085-10-D-5301
NAVFAC DRAWING NO. 12711917
SHEET 45 OF 81
F-501

DRAWFORM REVISION: HC MAY 2014

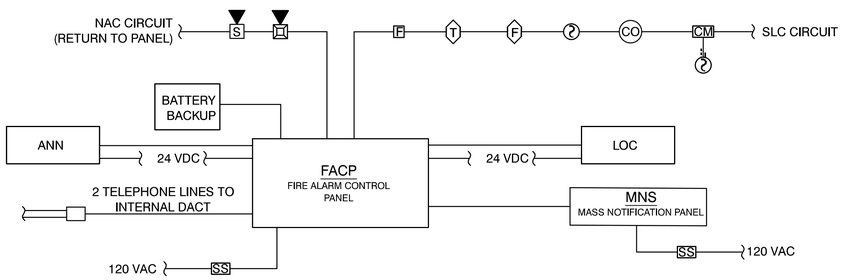

FIRE ALARM RISER DIAGRAM

N.A.

F-502 C3

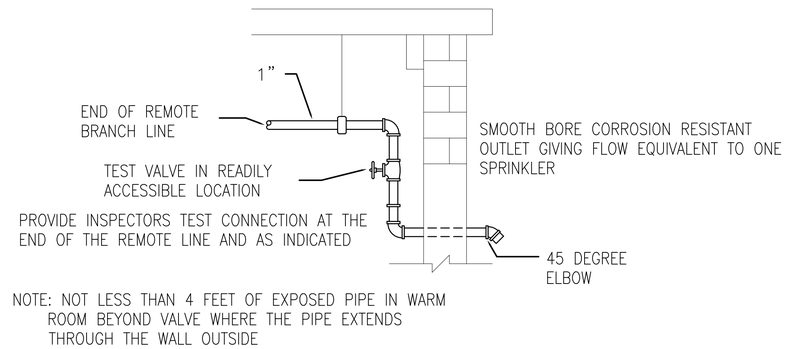

TYPICAL TEST CONNECTION

N.A.

F-502 C5

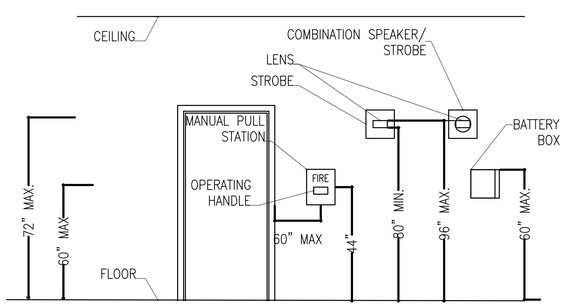

FIRE ALARM DETAILS

N.A.

F-502 A3

ATLANTIC
FIRE PROTECTION ENGINEERING, INC.
708 S. BATTLEFIELD BLVD., SUITE 201
CHESAPEAKE, VA 23322
www.atlanticfpe.com

SYM	DESCRIPTION	DATE	APPR

NAVFAC

COMMONWEALTH OF VIRGINIA
LORI S. HARRIS
No. 037544
2-3-16
PROFESSIONAL ENGINEER
SEAL

HBA
A/E INFO

APPROVED
FOR COMMANDER NAVFAC
ACTIVITY
SATISFACTORY TO DATE

DES	LSH	DRW	HHE	CHK	LSH
PM				XXX	
BRANCH MANAGER				XXX	
CHIEF ENG/ARCH				XXX	
FIRE PROTECTION				XXX	

DEPARTMENT OF THE NAVY
NAVAL FACILITIES ENGINEERING COMMAND
NAVAL FACILITIES ENGINEERING COMMAND
NAVAL STATION - NORFOLK, VIRGINIA
NORTH CAROLINA DIV
MCB CAMP LEJEUNE
JACKSONVILLE, NC
P-1475 CULTURAL ASSIMILATION FACILITY
FIRE PROTECTION DETAILS

SCALE: GRAPHIC
EPROJECT NO.: 1386337
CONSTR. CONTR. NO. N40085-10-D-5301
NAVFAC DRAWING NO. 12711918
SHEET 46 OF 81

F-502

DRAWFORM REVISION: 10 MAY 2014

PLUMBING LEGEND

1	WORK NOTE
P-1	PLUMBING FIXTURE DESIGNATION - SEE SCHEDULE
CW	DOMESTIC COLD WATER (CW)
HW	DOMESTIC HOT WATER SUPPLY (HW) - 140°F
THW	DOMESTIC TEMPERED WATER (THW) - 110°F
V	SANITARY VENT (V)
S	SANITARY WASTE LINE (S)
	PRESSURE RELIEF VALVE
	CHECK VALVE
	BALL VALVE
	REDUCED ZONE BACKFLOW PREVENTER (BFP)
	UNION
	PIPE TURN DOWN
	PIPE TURN UP
	PIPE SLOPE (DOWN IN ARROW DIRECTION)
	STRAINER
FD	FLOOR DRAIN - SEE DETAIL A1/P-501
	WALL CLEAN OUT (WCO)
COTG	CLEAN OUT TO GRADE (COTG) - SEE DETAIL P2/P-501
	HOSE BIBB (HB)
	WALL HYDRANT (WH)
FCO	FLOOR CLEANOUT - SEE DETAIL B1/P-501
TPV	TRAP PRIMER VALVE- SEE DETAIL A4/P-501
M	WATER METER

GENERAL NOTES

1. THE INTENT OF THESE DRAWINGS AND SPECIFICATIONS ARE TO DESCRIBE THE INSTALLATION OF A COMPLETE, FULLY ADJUSTED, AND OPERATIONAL SYSTEM.
2. THE CONTRACTOR SHALL PROVIDE ALL SUPERVISION, LABOR, MATERIAL, EQUIPMENT, MACHINERY, AND ANY AND ALL OTHER ITEMS NECESSARY TO COMPLETE THE SYSTEMS.
3. ALL WORK UNDER THIS SECTION SHALL BE ACCOMPLISHED IN STRICT ACCORDANCE WITH STATE BUILDING CODES. IN THE EVENT THE LOCAL AUTHORITY HAVING JURISDICTION DETERMINES THERE IS A CODE VIOLATION ASSOCIATED WITH THE CONSTRUCTION DOCUMENTS AND REQUIRES ADDITIONAL WORK, THE CONTRACTOR SHALL NOTIFY THE CONTRACTING OFFICER OF THE VIOLATION. IF THE CONTRACTOR DOES NOT CONTACT THE GOVERNMENT, ALL EXPENSES ASSOCIATED WITH THE VIOLATION WILL BE THE CONTRACTOR'S RESPONSIBILITY.
4. THE CONTRACTOR SHALL VISIT THE SITE BEFORE SUBMITTING HIS BID SO AS TO BE THOROUGHLY FAMILIAR WITH THE JOB CONDITIONS AND/OR PECULIARITIES. NO EXTRA PAYMENT WILL BE ALLOWED FOR ANYTHING WHICH COULD HAVE BEEN ANTICIPATED FROM A VISIT TO THE SITE.
5. THE CONTRACTOR SHALL REVIEW THE CONTRACT DOCUMENTS PRIOR TO SUBMITTING BID AND COMMENCING WORK. ALL DISCREPANCIES AND INTERFERENCES SHALL BE BROUGHT TO THE ATTENTION OF THE CONTRACTING OFFICER.
6. THE CONTRACTOR SHALL CONTACT LOCAL UTILITIES TO OBTAIN ALL REQUIREMENTS, APPROVAL AND PERMITS. THE CONTRACTOR SHALL PAY ALL FEES REQUIRED FOR THE INSTALLATION OF THEIR WORK.
7. THE DRAWINGS ARE DIAGRAMMATIC ONLY. THE CONTRACTOR MAY NEED TO MAKE FIELD ADJUSTMENTS TO ACCOMMODATE ACTUAL FIELD CONDITIONS. CONTACT THE CONTRACTING OFFICER FOR HIS APPROVAL FOR ANY ADJUSTMENTS THAT WILL CHANGE THE "EXPOSED TO VIEW" APPEARANCE OF ANY GIVEN AREA OR IF THE CHANGE IMPACTS PERFORMANCE.
8. THE CONTRACTOR SHALL REFER TO THE ARCHITECTURAL AND STRUCTURAL DRAWINGS FOR THE GENERAL CONSTRUCTION OF THE BUILDING, FOR FLOORS AND CEILING HEIGHTS, FOR LOCATIONS OF WALLS, PARTITIONS, BEAMS, ETC.
9. THE CONTRACTOR SHALL REVIEW THE EQUIPMENT REQUIREMENTS PRIOR TO BEGINNING WORK TO VERIFY ALL REQUIRED CONNECTIONS AND CONTACT THE CONTRACTING OFFICER TO CLARIFY ANY DISCREPANCIES.
10. CONTRACTOR SHALL VERIFY ALL LISTED MODEL NUMBERS WITH MANUFACTURERS TO INSURE PROPER APPLICATION OF EQUIPMENT.
11. EQUIPMENT AND MATERIALS SHALL BE HANDLED, STORED AND PROTECTED IN ACCORDANCE WITH THE MANUFACTURER'S RECOMMENDATIONS.
12. THE CONTRACTOR SHALL PERFORM ANY AND ALL TRENCHING, EXCAVATION AND BACKFILLING REQUIRED FOR THE INSTALLATION OF HIS WORK.
13. THE PLUMBING CONTRACTOR SHALL FURNISH ALL NECESSARY SCAFFOLDING, STAGING, RIGGING AND HOISTING REQUIRED FOR THE COMPLETION OF HIS WORK.
14. ALL WORK SHALL BE COORDINATED WITH THE GENERAL CONTRACTOR AND OTHER TRADES INVOLVED IN THE CONSTRUCTION PROJECT. ALL WORK SHALL BE CAREFULLY LAID OUT IN ADVANCE TO COORDINATE ARCHITECTURAL, STRUCTURAL, MECHANICAL, PLUMBING AND ELECTRICAL FEATURES OF CONSTRUCTION.
15. EQUIPMENT SHALL BE INSTALLED IN ACCORDANCE WITH MANUFACTURERS' WRITTEN INSTRUCTIONS.
16. ALL FIXTURES SHALL HAVE CHROME-PLATED ANGLE STOP VALVE WITH ESCUTCHEONS. FIXTURES WITH FAST CLOSING VALVES SHALL HAVE ACCESSIBLE WATER HAMMER ARRESTORS.
17. PIPE HANGERS: CARBON STEEL, ADJUSTABLE, CLEVIS.
18. SHIELD FOR INSULATED: 18 GAGE GALVANIZED STEEL SHIELD OVER INSULATION IN 180 DEGREE SEGMENTS, MINIMUM 12 INCHES LONG AT PIPE SUPPORT.
19. STEEL HANGER RODS: THREADED BOTH ENDS OR CONTINUOUS THREADED.
20. INSTALL HANGERS, SUPPORTS, CLAMPS, AND ATTACHMENTS AS REQUIRED TO PROPERLY SUPPORT PIPING FROM BUILDING STRUCTURE.
21. ALL PLUMBING PIPING AND EQUIPMENT EXPOSED TO VIEW ABOVE 9'-4" AFF SHALL BE PAINTED FLAT BLACK.
22. WATER PIPE SIZES ARE BASED ON A MINIMUM WORKING PRESSURE OF 71 PSIG AT A FLOW RATE OF 62 GPM AT THE LOCATION WHERE THE MAIN ENERS THE BUILDING.
23. PENETRATIONS SHALL BE IN ACCORDANCE WITH UL THROUGH-WALL DIRECTORY.

NO.	DESCRIPTION	DATE	APPR

NAVFAC

NORTH CAROLINA PROFESSIONAL SEAL 03-03-16 S.G. ROBERTS

SEAL

HBA

A/E INFO

APPROVED

FOR COMMANDER NAVFAC

ACTIVITY

SATISFACTORY TO DATE

DES	BF	DRW	RER	CHK	FA

PM

BRANCH MANAGER

CHIEF ENG/ARCH

FIRE PROTECTION

DEPARTMENT OF THE NAVY
NAVAL FACILITIES ENGINEERING COMMAND
NAVAL FACILITIES ENGINEERING COMMAND
NAVAL STATION – NORFOLK, VIRGINIA
NORTH CAROLINA IPT
MCB CAMP LEJEUNE
JACKSONVILLE, NC
P-1475 CULTURAL ASSIMILATION FACILITY
PLUMBING LEGEND, NOTES AND ABBREVIATIONS

SCALE:	GRAPHIC
EPROJECT NO.:	13-86-337
CONSTR. CONTR. NO.	N40085-10-D-5301
NAVFAC DRAWING NO.	12711919
SHEET	47 OF 81

P-001

BOWMAN FOSTER & ASSOCIATES, PC

DRAWFORM REVISION: 10 MAY 2014

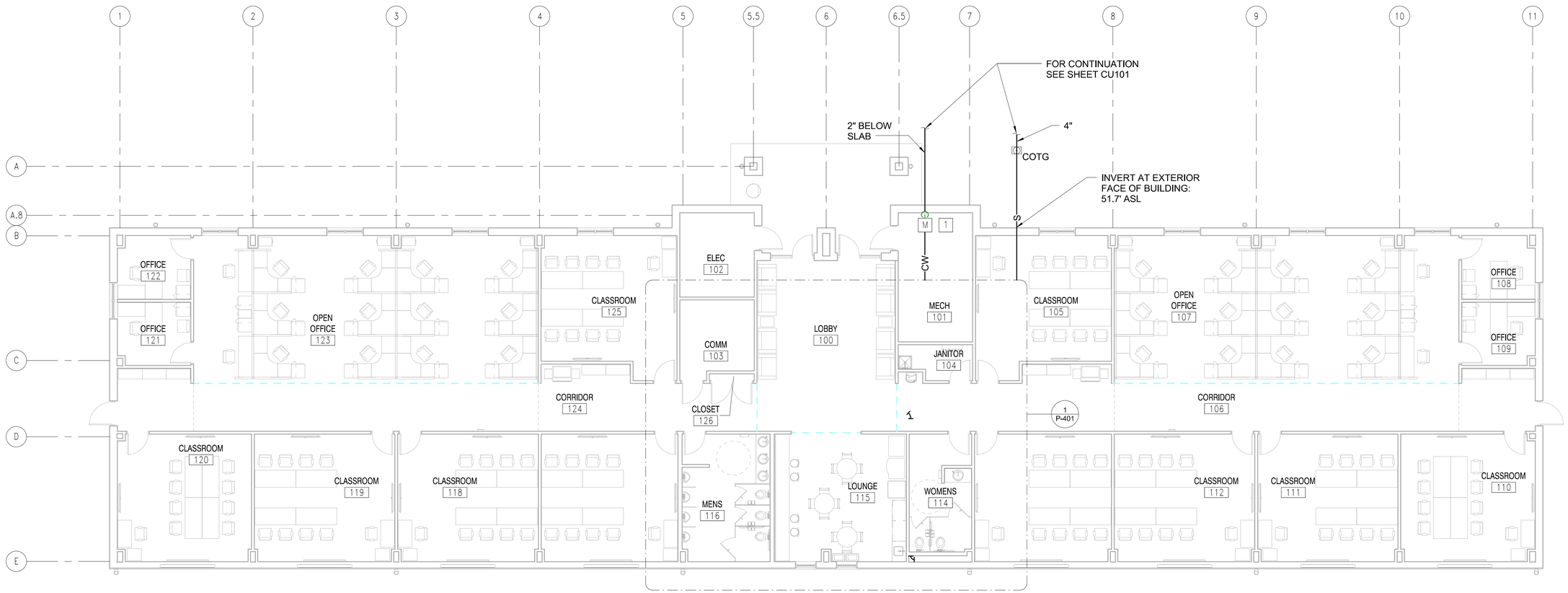

PLUMBING FLOOR PLAN

1/8" = 1'-0"

PLAN NORTH

WORK NOTES

1. PROVIDE WATER METER IN VERTICAL PIPING. PROVIDE ISOLATION BALL VALVE UPSTREAM OF METER ON VERTICAL PIPING PROVIDE PIPING SUPPORTS AS REQUIRED. SEE WATER SERVICE ENTRANCE SCHEMATIC, THIS SHEET.

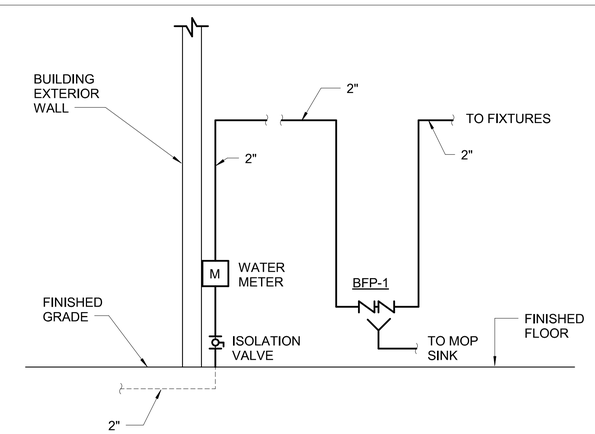

WATER SERVICE ENTRANCE SCHEMATIC

NOT TO SCALE

SCALE: 1/8" = 1'-0" 0 4' 8' 16'

MK	DESCRIPTION	DATE	APPR

NAVFAC

SEAL

HBA

A/E INFO

APPROVED

FOR COMMANDER NAVFAC

ACTIVITY

SATISFACTORY TO DATE

DES BF	DRW RER	CHK FA

PM

BRANCH MANAGER

CHIEF ENG/ARCH

FIRE PROTECTION

BOWMAN FOSTER & ASSOCIATES, PC

DEPARTMENT OF THE NAVY
NAVAL FACILITIES ENGINEERING COMMAND
NAVAL FACILITIES ENGINEERING COMMAND
NAVAL STATION – NORFOLK, VIRGINIA
NORTH CAROLINA IPT
MCB CAMP LEJEUNE
JACKSONVILLE, NC
P-1475 CULTURAL ASSIMILATION FACILITY
PLUMBING FLOOR PLAN

SCALE: GRAPHIC
EPROJECT NO.: 13-86-337
CONSTR. CONTR. NO. N40085-10-D-5301
NAVFAC DRAWING NO. 12711920
SHEET 48 OF 81

P-101

DRAWFORM REVISION: 10 MAY 2014

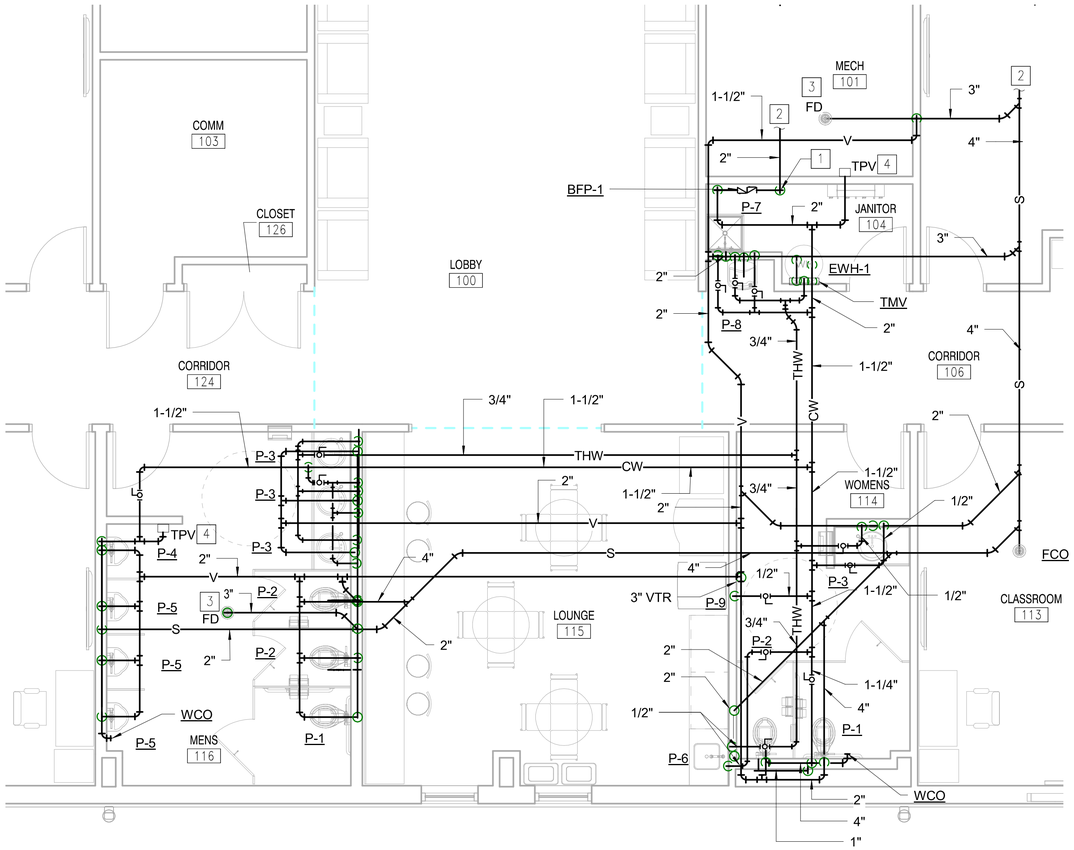

ENLARGED PLUMBING PLAN

1/4" = 1'-0"

PLAN NORTH

WORK NOTES

1. ROUTE 2" COLD WATER PIPING DOWN FROM ABOVE CEILING TO APPROXIMATELY 36" AFF. COORDINATE EXACT HEIGHT WITH BFP-1 INSTALLATION REQUIREMENTS. SEE DETAIL C2/P-501.
2. FOR CONTINUATION, SEE SHEET P-101.
3. NEW FLOOR DRAIN WITH TRAP PRIMER CONNECTION. FIELD COORDINATE EXACT LOCATION PRIOR TO INSTALLATION. SEE DETAIL A1/P-501.
4. NEW TRAP PRIMER VALVE. PROVIDE VALVE WITH INTREGAL VACUUM BREAKER. ROUTE DISCHARGE PIPING DOWN IN WALL AND BELOW SLAB, THEN CONNECT TO TRAP PRIMER CONNECTION OF FLOOR DRAIN. FIELD COORDINATE EXACT LOCATION OF VALVE AND ROUTING OF PIPING PRIOR TO INSTALLATION. SEE DETAIL A4/P-501.

NUM	DESCRIPTION	DATE	APPR

NAVFAC

NORTH CAROLINA PROFESSIONAL SEAL 03-03-16 S.G. ROBERTS

SEAL

HBA

A/E INFO

APPROVED

FOR COMMANDER NAVFAC

ACTIVITY

SATISFACTORY TO DATE

DES	BF	DRW	RER	CHK	FA

PM

BRANCH MANAGER

CHIEF ENG/ARCH

FIRE PROTECTION

DEPARTMENT OF THE NAVY
NAVAL FACILITIES ENGINEERING COMMAND
NAVAL FACILITIES ENGINEERING COMMAND
NORTH CAROLINA IPT
NAVAL STATION – NORFOLK, VIRGINIA

MCB CAMP LEJEUNE
JACKSONVILLE, NC

P-1475 CULTURAL ASSIMILATION FACILITY

ENLARGED PLUMBING PLANS

BOWMAN FOSTER & ASSOCIATES, PC

SCALE: 1/4" = 1'-0" (0 2' 4' 8')

SCALE:	GRAPHIC
EPROJECT NO.:	13-86-337
CONSTR. CONTR. NO.	N40085-10-D-5301
NAVFAC DRAWING NO.	12711921
SHEET	49 OF 81

P-401

DRAWFORM REVISION: 10 MAY 2014

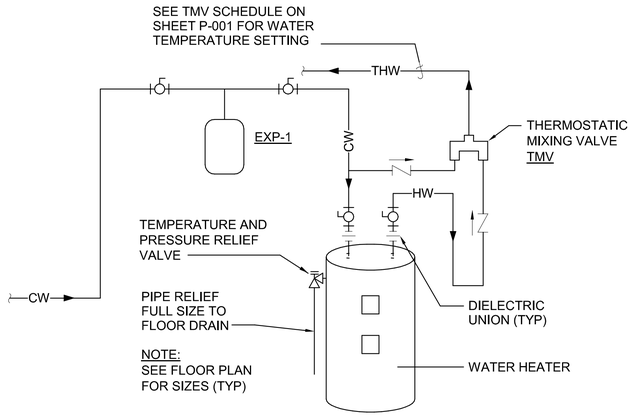

NOTE:
SEE DOMESTIC WATER RISER DIAGRAM

WATER HEATER PIPING DIAGRAM

NO SCALE — P-401, P-601 — C1

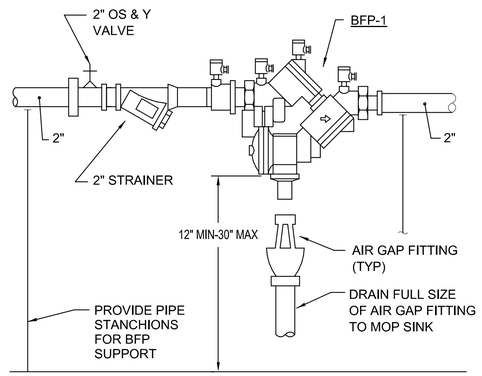

BFP-1 BACKFLOW PREVENTION ASSEMBLY DETAIL

NO SCALE — P-401, P-601 — C2

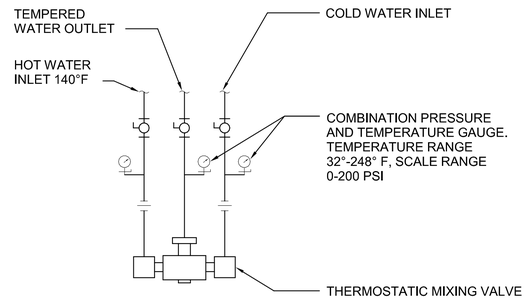

NOTE:
WALL MOUNT THERMOSTATIC MIXING VALVE AND ASSOCIATED APPURTENANCES PER MANUFACTURERS RECOMMENDATIONS

THERMOSTATIC MIXING VALVE PIPING DETAIL

NO SCALE — P-401, P-601 — C4

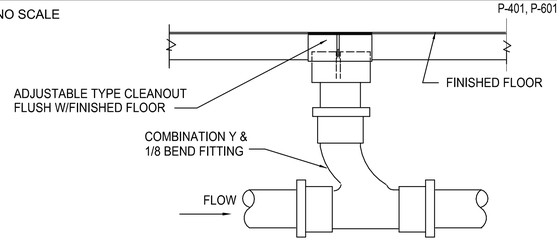

CLEANOUT DETAIL (FCO)

NO SCALE — P-401 — B1

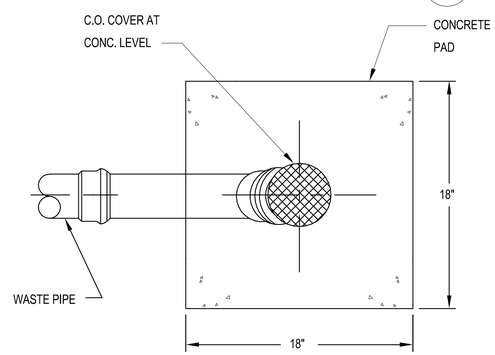

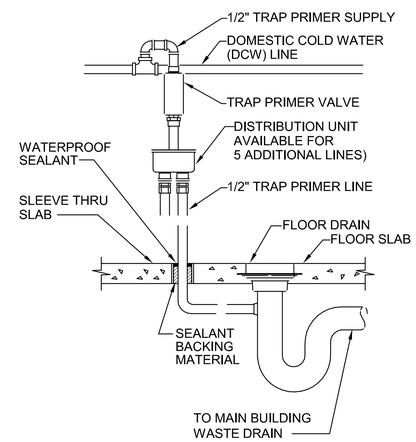

TRAP SEAL PRIMER DETAIL

NO SCALE — P-401 — A4

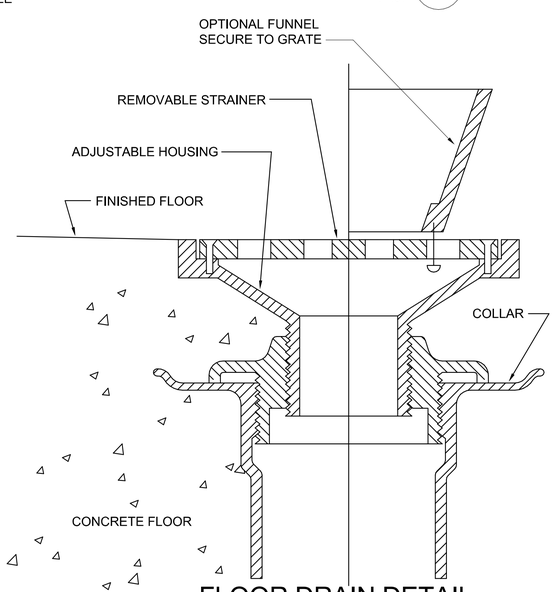

FLOOR DRAIN DETAIL

NO SCALE — P-401 — A1

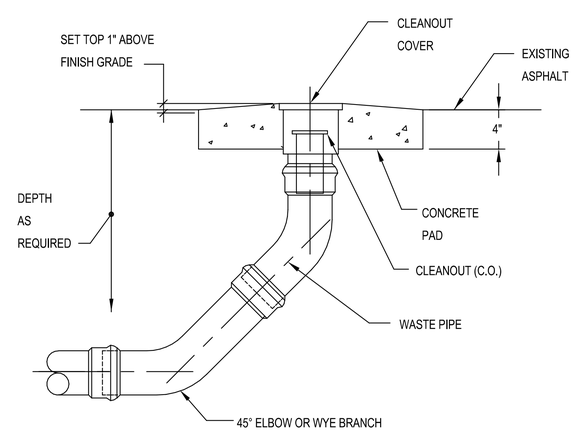

CLEANOUT TO GRADE DETAIL

NO SCALE — P-101 — A2

MK	DESCRIPTION	DATE	APPR

NAVFAC

HBA

A/E INFO

APPROVED

FOR COMMANDER NAVFAC

ACTIVITY

SATISFACTORY TO DATE

DES	BF	DRW	RER	CHK	FA

PM

BRANCH MANAGER

CHIEF ENG/ARCH

FIRE PROTECTION

DEPARTMENT OF THE NAVY — NAVAL FACILITIES ENGINEERING COMMAND — NORTH CAROLINA IPT — NAVAL FACILITIES ENGINEERING COMMAND — NAVAL STATION – NORFOLK, VIRGINIA

MCB CAMP LEJEUNE — JACKSONVILLE, NC

P-1475 CULTURAL ASSIMILATION FACILITY

PLUMBING DETAILS

SCALE: GRAPHIC

EPROJECT NO.: 13-86-337

CONSTR. CONTR. NO. N40085-10-D-5301

NAVFAC DRAWING NO. 12711922

SHEET 50 OF 81

P-501

BOWMAN FOSTER & ASSOCIATES, PC

DRAWFORM REVISION: 10 MAY 2014

WATER HAMMER ARRESTOR SCHEDULE

PDI UNIT	FIXTURE UNITS
A	1 - 11
B	12 - 32

PDI UNIT DESIGNATIONS AND FIXTURE UNIT VALUES ARE BASED ON THE PLUMBING AND DRAINAGE INSTITUTE (PDI) STANDARD PDI-WH 201, 2010 EDITION.

SLOPE OF HORIZONTAL DRAINAGE PIPING

NOM. SIZE (INCHES)	MINIMUM SLOPE (INCH PER FOOT)
2 1/2" OR LESS	1/4
3 TO 6	1/8

BACKFLOW PREVENTER SCHEDULE

MARK	TYPE	SERVICE	SIZE	REMARKS
BFP-1	REDUCED PRESSURE ZONE ASSEMBLY	DOMESTIC WATER	2"	1, 2, 3

NOTES:
1. SEE BACKFLOW PREVENTER ASSEMBLY DETAIL C2/P-501 FOR ADDITIONAL INFORMATION.
2. PROVIDE AIR GAP PER MANUFACTURER'S RECOMMENDATIONS, PROVIDE DRAIN PIPING TO ADJACENT MOP SINK.
3. MAXIMUM ALLOWABLE PRESSURE DROP IS 15 PSI.

ELECTRIC WATER HEATER SCHEDULE

MARK	TANK VOLUME (GAL)	INPUT (KW)	RECOVERY (GPH @90° RISE)	H2O TEMP (°F)	POWER			REMARKS
					VOLTS	PHASE	HZ	
EWH-1	50	12.0	49	140	208	3	60	1,2

NOTES:
1. SEE DETAIL C1/P-501.
2. MINIMUM ENERGY FACTOR (EF) SHALL BE 0.864.

EXPANSION TANK SCHEDULE

MARK	TYPE	TANK SIZE (GAL)	ACCEPTANCE (GAL @ 60PSI)	MAX WORKING PRESSURE (PSI)	MAX OPERATING TEMP (°F)	REMARKS
EXP-1	DIAPHRAGM	4.4	2.2	150	180	1

NOTES:
1. SEE DETAIL C1/P-501.

THERMOSTATIC MIXING VALVE SCHEDULE

MARK	HW INLET TEMP (°F)	HW OUTLET TEMP (°F)	MINIMUM FLOW (GPM)	PRESSURE DROP (PSI)	REMARKS
TMV-1	140	110	0.5	10 @ 9.0 GPM	1

NOTES:
1. PROVIDE THERMOSTATIC MIXING VALVE WITH VANDAL RESISTANT LOCKING MECHANISM, ROTATABLE UNION CHECKSTOPS AND BRONZE FINISH. MAXIMUM OPERATING PRESSURE SHALL BE 125 PSI, MAXIMUM HOT WATER TEMPERATURE SHALL BE 180°F. SEE DETAIL C4/P-501.

PLUMBING FIXTURE CONNECTION SCHEDULE

MARK	DESCRIPTION	MOUNTING	PIPE SIZE				REMARKS
			CW	HW	W	V	
P-1	FLUSH VALVE WATER CLOSET (HC)	FLOOR	1"	-	4"	2"	4,6,8
P-2	FLUSH VALVE WATER CLOSET	FLOOR	1"	-	4"	2"	4,6,8
P-3	SOLID SURFACE LAVATORY (HC)	INTERGRAL	1/2"	1/2"	1 1/2"	1 1/2"	1,2,3,4
P-4	WALL MOUNTED URINAL (HC)	WALL	3/4"	-	2"	1 1/2"	4,8,11
P-5	WALL MOUNTED URINAL	WALL	3/4"	-	2"	1 1/2"	8,11
P-6	KITCHEN SINK	UNDERMOUNT	1/2"	1/2"	2"	1 1/2"	7,12
P-7	ACYRLIC MOP SINK	FLOOR	3/4"	3/4"	3"	1 1/2"	5
P-8	ELECTRIC WATER COOLER (HC)	WALL	1/2"	-	1 1/2"	1 1/4"	4,8,9
P-9	REFIGERATOR BOX	RECESSED	1/2"	-	-	-	-
FD	FLOOR DRAIN	FLOOR	-	-	3"	1-1/2"	10

NOTES:
1. PROVIDE TOP MOUNTED, CENTERSET, HARD-WIRED, LOW VOLTAGE SENSOR OPERATED FAUCET WITH FLOW RATE OF 0.35 GPM.
2. SEE ARCHITECTURAL FOR MOUNTING HEIGHTS.
3. PROVIDE STOPS.
4. ALL FIXTURES INDICATED AS HANDICAP ACCESSIBLE (HC) SHALL COMPLY AND BE INSTALLED IN ACCORDANCE WITH THE LATEST EDITION OF ANSI A117-1.
5. PROVIDE WALL MOUNTED FAUCET WITH BUCKET HOOK.
6. PROVIDE HARD-WIRED, LOW VOLTAGE SENSOR OPERATED FLUSHOMETER WITH 1.1 GPF FLOWRATE.
7. PROVIDE TOP MOUNTED, CENTERSET GOOSENECK FAUCET WITH AERATOR TO PROVIDE FLOW RATE OF 1.0 GPM.
8. PROVIDE FIXTURE CARRIER.
9. PROVIDE FIXTURE WITH WATER BOTTLE FILLER.
10. PROVIDE WITH 1/2" TRAP PRIMER CONNECTION.
11. PROVIDE HARD -WIRED, LOW VOLTAGE SENSOR OPERATED FLUSHOMETER WITH 0.125 GPF FLOW RATE.
12. BOWL SIZE: 15"x15"

NUM	DESCRIPTION	DATE	APPR

NAVFAC

NORTH CAROLINA PROFESSIONAL SEAL 03-03-16 S.G. ROBERTS

SEAL

HBA

A/E INFO

APPROVED

FOR COMMANDER NAVFAC

ACTIVITY

SATISFACTORY TO DATE

DES	BF	DRW	RER	CHK	FA

PM

BRANCH MANAGER

CHIEF ENG/ARCH

FIRE PROTECTION

DEPARTMENT OF THE NAVY
NAVAL FACILITIES ENGINEERING COMMAND
NAVAL FACILITIES ENGINEERING COMMAND
NAVAL STATION – NORFOLK, VIRGINIA
NORTH CAROLINA IPT
MCB CAMP LEJEUNE
JACKSONVILLE, NC

P-1475 CULTURAL ASSIMILATION FACILITY

PLUMBING SCHEDULES

BOWMAN FOSTER & ASSOCIATES, PC

SCALE:	GRAPHIC
EPROJECT NO.:	13-86-337
CONSTR. CONTR. NO.	N40085-10-D-5301
NAVFAC DRAWING NO.	12711923
SHEET	51 OF 81

P-601

DRAWFORM REVISION: 10 MAY 2014

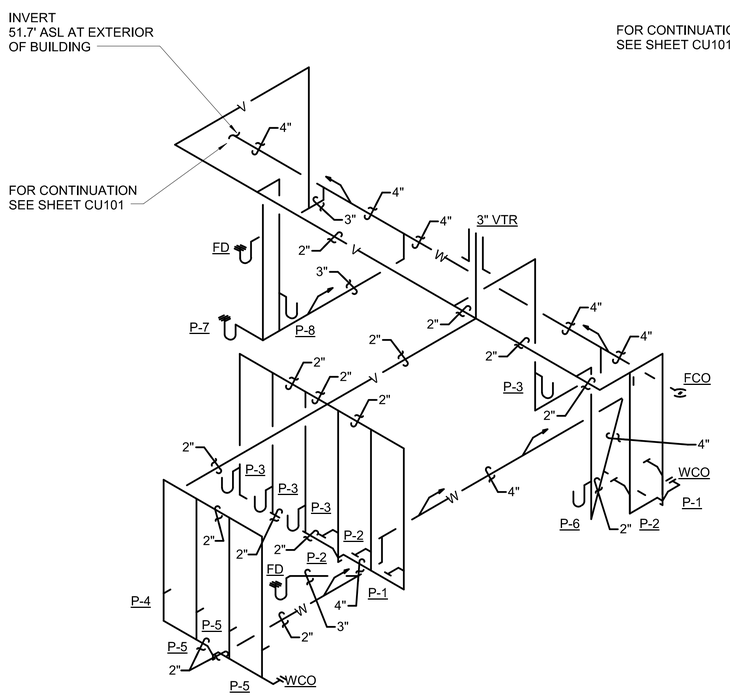

WASTE AND VENT RISER DIAGRAM

NO SCALE

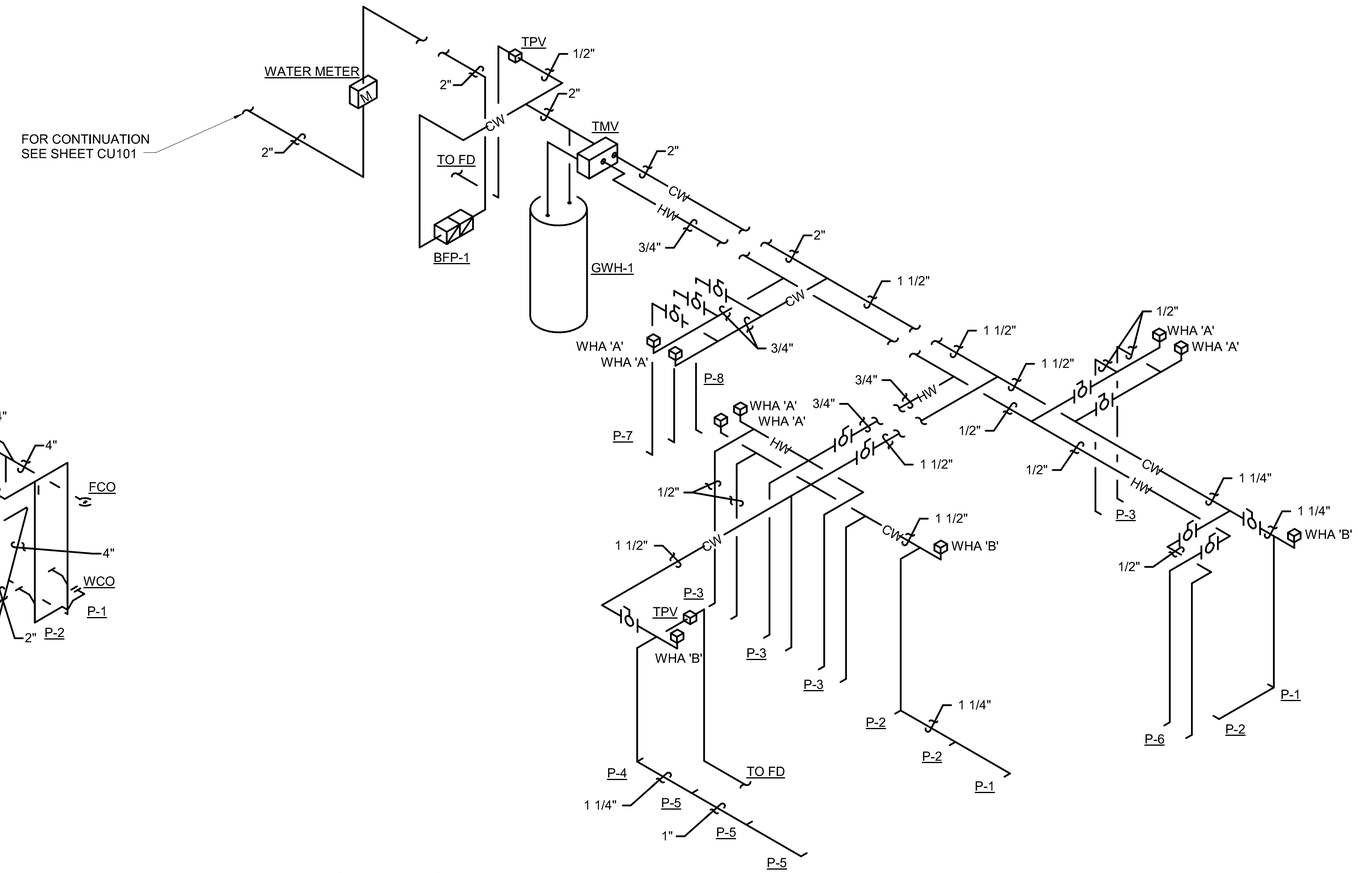

WATER RISER DIAGRAM

NO SCALE

NO.	DESCRIPTION	DATE	APPR

NAVFAC

HBA

A/E INFO

APPROVED

FOR COMMANDER NAVFAC

ACTIVITY

SATISFACTORY TO DATE

DES	BF	DRW	RER	CHK	FA

PM

BRANCH MANAGER

CHIEF ENG/ARCH

FIRE PROTECTION

DEPARTMENT OF THE NAVY
NAVAL FACILITIES ENGINEERING COMMAND
NAVAL FACILITIES ENGINEERING COMMAND
NAVAL STATION – NORFOLK, VIRGINIA
NORTH CAROLINA IPT
MCB CAMP LEJEUNE
JACKSONVILLE, NC

P-1475 CULTURAL ASSIMILATION FACILITY

PLUMBING RISER DIAGRAMS

SCALE: GRAPHIC

EPROJECT NO.: 13-86-337

CONSTR. CONTR. NO. N40085-10-D-5301

NAVFAC DRAWING NO. 12711924

SHEET 52 OF 81

P-701

BOWMAN FOSTER & ASSOCIATES, P.C.

DRAWFORM REVISION: 10 MAY 2014

LEGEND AND ABBREVIATIONS

1	WORK NOTE
HWS	HOT WATER SUPPLY PIPING
HWR	HOT WATER RETURN PIPING
RL	REFRIGERANT LIQUID PIPING
RS	REFRIGERANT SUCTION PIPING
D	CONDENSATE DRAIN PIPING
	BALANCING VALVE (GLOBE VALVE/SQUARE HEAD COCK)
	GATE VALVE
	CHECK VALVE
	SUPPLY DUCT SECTION
	RETURN OR EXHAUST DUCT SECTION
SA	SUPPLY AIR
RA	RETURN AIR
OA	OUTSIDE AIR
T	THERMOSTAT/TEMPERATURE SENSOR, MOUNT 42" ABOVE FLOOR
F	FAN SWITCH-FLUSH MOUNT 42" ABOVE FLOOR
	ELBOW WITH TURNING VANES
	MANUAL BALANCING DAMPER W/LOCKING QUADRANT
	FLEXIBLE DUCT CONNECTION
	REMOVE EQUIPMENT, DUCTWORK AND PIPING
	STRAINER WITH BLOWDOWN VALVE
	3-WAY AUTO CONTROL VALVE
	2-WAY AUTO CONTROL VALVE
	THERMOMETER
	FLEXIBLE PIPING CONNECTION
	PRESSURE GAUGE SHUT-OFF COCK
	UNION
A 100	GRILLE OR DIFFUSER MARK - SEE SCHEDULE CFM QUANTITY LISTED
	(AD) ACCESS DOOR
M	MOTORIZED CONTROL DAMPER
S	SMOKE DETECTOR
P-1	PUMP MARK-SEE SCHEDULE
EF-1	EXHAUST FAN MARK-SEE SCHEDULE

APD	AIR PRESSURE DROP
CFH	CUBIC FEET PER HOUR
CFM	CUBIC FEET PER MINUTE
ºF	DEGREE FAHRENHEIT
DB	DRY BULB
EA	EXHAUST AIR
EAT	ENTERING AIR TEMPERATURE
EDB	ENTERING DRY BULB
EFF	EFFICIENCY
ESP	EXTERNAL STATIC PRESSURE
EWB	ENTERING WET BULB
EWT	ENTERING WATER TEMPERATURE
FLA	FULL LOAD AMPS
FT	FEET
GPM	GALLONS PER MINUTE
HP	HORSEPOWER
IN	INCHES
IN WG	INCHES WATER GAGE
LAT	LEAVING AIR TEMPERATURE
LDB	LEAVING DRY BULB
LWB	LEAVING WET BULB
LWT	LEAVING WATER TEMPERATURE
MAX	MAXIMUM
MBH	1000 BRITISH THERMAL UNITS
MCA	MINIMUM CIRCUIT AMPS
MFS	MAXIMUM FUSE SIZE
MIN	MINIMUM
NC	NOISE CRITERIA
NO	NUMBER
OA	OUTDOOR AIR
PD	PRESSURE DROP
RPM	REVOLUTIONS PER MINUTE
SA	SUPPLY AIR
SENS	SENSIBLE
TSP	TOTAL STATIC PRESSURE
TYP	TYPICAL
WB	WET BULB
WPD	WATER PRESSURE DROP

GENERAL NOTES

1. GENERAL NOTES ON THIS DRAWING ARE APPLICABLE TO EACH HVAC DRAWING OF THIS SET. SEE EACH DRAWING FOR SPECIFIC NOTES APPLICABLE TO THAT DRAWING.
2. COORDINATE THAT OUTSIDE AIR INTAKE OPENINGS FOR VENTILATION AIR ARE LOCATED AT LEAST 10 FEET MEASURED IN ANY DIRECTION FROM ANY FLUES.
3. OVERHEAD PIPING IN SPACES WITHOUT HUNG CEILINGS SHALL BE CONCEALED UNLESS OTHERWISE NOTED.
4. PROVIDE PIPE SLEEVES LARGE ENOUGH TO ALLOW FOR REQUIRED LATERAL MOVEMENT OF PIPING.
5. COORDINATE LOCATION OF GRILLES, REGISTERS, DIFFUSERS, THERMOSTATS, AND TRADES SO AS TO PRESENT A NEAT AND ATTRACTIVE INSTALLATION THROUGHOUT THE ENTIRE BUILDING. MOUNT ALL AS INDICATED ON PLANS AND AT ELEVATIONS INDICATED IN SECTIONS.
6. ALL EXPOSED PIPING, DUCTWORK, ETC SHALL BE PAINTED BLACK.
7. DO NOT SCALE DRAWINGS. SEE ARCHITECTURAL FOR THE EXACT LOCATION OF DOORS, WINDOWS, ETC.
8. COORDINATE LOCATION AND INSTALLATION OF EQUIPMENT WITH OTHER TRADES.
9. TEMPERATURE SENSORS SHALL BE LOCATED IN THE ROOMS INDICATED. INSTALL AT APPROX. 42" AFF.
10. FOR LOCATION OF MOTOR STARTERS, SEE ELECTRICAL DRAWINGS.
11. PROVIDE A MINIMUM OF THREE TIMES THE FAN DIAMETER OF STRAIGHT DUCTWORK OFF THE SUPPLY AIR FAN DISCHARGE BEFORE ANY TAKE OFFS OR ELBOWS.
12. PROVIDE EXTENDED VOLUME DAMPER CONTROL RODS SO THAT HANDLES ARE WELL CLEAR OF DUCT INSULATION.
13. EQUIPMENT WITH FILTERS SHALL BE INSTALLED SO THAT FILTERS CAN BE EASILY REMOVED AND REPLACED.
14. EXAMINE MANUFACTURER'S LITERATURE TO DETERMINE RECOMMENDED CLEARANCES. THESE CLEARANCES SHALL BE STABLISHED AND MAINTAINED. THE CONTRACTOR SHALL BE RESPONSIBLE FOR COORDINATING THESE REQUIREMENTS WITH ALL OTHER TRADES.
15. PROVIDE A MINIMUM OF 6-8 DUCT DIAMETERS ON THE INLET OF VAV BOXES.

NO.	DESCRIPTION	DATE	APPR

NAVFAC

NORTH CAROLINA
PROFESSIONAL ENGINEER
SEAL
07-03-16
S. G. ROBERTS

SEAL

HBA

A/E INFO

APPROVED

FOR COMMANDER NAVFAC

ACTIVITY

SATISFACTORY TO DATE

DES	KNC	DRW	LAW	CHK	MED

PM

BRANCH MANAGER

CHIEF ENG/ARCH

FIRE PROTECTION

DEPARTMENT OF THE NAVY
NAVAL FACILITIES ENGINEERING COMMAND
NAVAL FACILITIES ENGINEERING COMMAND — NORFOLK, VIRGINIA
NORTH CAROLINA IPT
MCB CAMP LEJEUNE
JACKSONVILLE, NC
P-1475 CULTURAL ASSIMILATION FACILITY
MECHANICAL LEGEND, NOTES AND ABBREVIATIONS

SCALE:	GRAPHIC
EPROJECT NO.:	13-86-337
CONSTR. CONTR. NO.	N40085-10-D-5301
NAVFAC DRAWING NO.	12711925
SHEET	53 OF 81

M-001

BOWMAN FOSTER & ASSOCIATES, PC

DRAWFORM REVISION: 10 MAY 2014

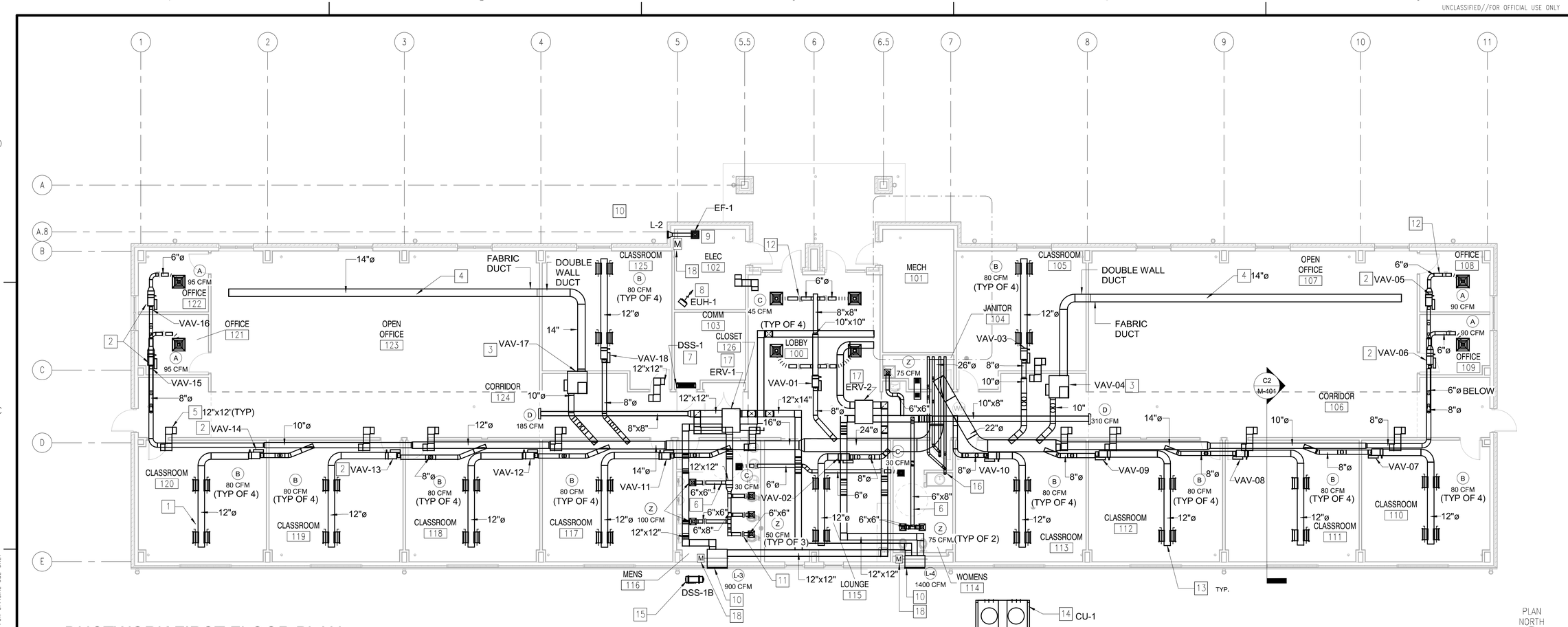

DUCTWORK FIRST FLOOR PLAN

1/8" = 1'-0"

INSULATION NOTE:

ALL DUCTWORK SHALL BE INSULATED. ALL INSULATION IN EXPOSED CEILINGS SHALL BE PAINTABLE DUCT BOARD. CLEAR SILICONE SHALL BE USED ON DOUBLE WALL DUCT TO MAINTAIN CLEAN INSTALLATION.

CONSTUCTION NOTES

1. PROVIDE DOUBLE WALL DUCTWORK , HANGERS, AND SUPPORTS COMPLETE. DUCTWORK SHALL BE PROVIDED WITH PAINTGRIP FINISH. REFER TO DETAIL C2 ON DRAWING M-501.
2. PROVIDE SHUT-OFF TYPE VAV BOX WITH HW REHEAT COIL, HANGERS, AND SUPPORTS COMPLETE. REFER TO DETAIL C3 ON M-502.
3. PROVIDE FAN POWERED TYPE VAV BOX WITH HW REHEAT COIL, HANGERS, AND SUPPORTS COMPLETE. REFER TO DETAIL C1 ON M-502.
4. PROVIDE FABRIC DUCT SYSTEM, HANGERS, AND SUPPORTS MOUNTED AT 10'-6" AFF. SUBMIT COLOR CHART DURING SHOP DRAWING PHASE.
5. PROVIDE 12"x12" Z-SHAPED LINED TRANSFER DUCT, HANGERS, AND SUPPORTS MOUNTED AT 13'-0" AFF. REFER TO DETAIL C2 ON DRAWING M-503
6. PROVIDE EXHAUST AIR DUCTWORK, INSULATION, HANGERS, AND SUPPORTS.
7. PROVIDE DUCTLESS SPLIT SYSTEM HEAT PUMP, MOUNTED ABOVE THE DOOR.
8. PROVIDE ELECTRIC HEATER, HANGERS, AND SUPPORTS.
9. PROVIDE EXHAUST FAN, DUCTWORK, INSULATION, HANGERS AND SUPPORTS.
10. PROVIDE LOUVER AND FULL SIZE SHEET METAL PLENUM.
11. REFER TO VOLUME DAMPER DETAIL A4 ON DRAWING M-501.
12. PROVIDE SUPPLY DUCTWORK, INSULATION, HANGERS AND SUPPORTS. INSULATE SUPPLY DUCTWORK EXTERNALLY WHERE CONCEALED BY A CEILING. REFER TO DETAIL A3 AND C2 ON DRAWING M-503.
13. REFER TO DUCT-REGISTER SPIRAL DETAIL A4 ON DRAWING M-503.
14. PROVIDE CONDENSING UNIT ON CONCRETE PAD. CONCRETE PAD SHALL BE 6" LARGER THAN EQUIPMENT ON ALL SIDES.
15. PROVIDE HEAT PUMP ON CONCRETE PAD. CONCRETE PAD SHALL BE 6" LARGER THAN EQUIPMENT ON ALL SIDES.
16. PROVIDE 4" DIAMETER FLUE AND OUTSIDE AIR INTAKE FOR BOILERS. REFER TO DETAIL A4 ON M-502.
17. PROVIDE ENERGY RECOVERY VENTILATOR, VIBRATION ISOLATION, HANGERS AND SUPPORTS.
18. PROVIDE LOW LEAKAGE CONTROL DAMPER.

SCALE: 1/8" = 1'-0" (0, 4', 8', 16')

BOWMAN FOSTER & ASSOCIATES, PC

NAVFAC

HBA

A/E INFO

APPROVED

FOR COMMANDER NAVFAC

ACTIVITY

SATISFACTORY TO DATE

DES	KNC	DRW	LAW	CHK	MED

PM

BRANCH MANAGER

CHIEF ENG/ARCH

FIRE PROTECTION

DEPARTMENT OF THE NAVY
NAVAL FACILITIES ENGINEERING COMMAND
NAVAL FACILITIES ENGINEERING COMMAND
NAVAL STATION – NORFOLK, VIRGINIA
NORTH CAROLINA IPT
MCB CAMP LEJEUNE
JACKSONVILLE, NC
P-1475 CULTURAL ASSIMILATION FACILITY
DUCTWORK FLOOR PLAN

SCALE:	GRAPHIC
EPROJECT NO.:	13-86-337
CONSTR. CONTR. NO.	N40085-10-D-5301
NAVFAC DRAWING NO.	12711926
SHEET	54 OF 81

M-101

DRAWFORM REVISION: 10 MAY 2014

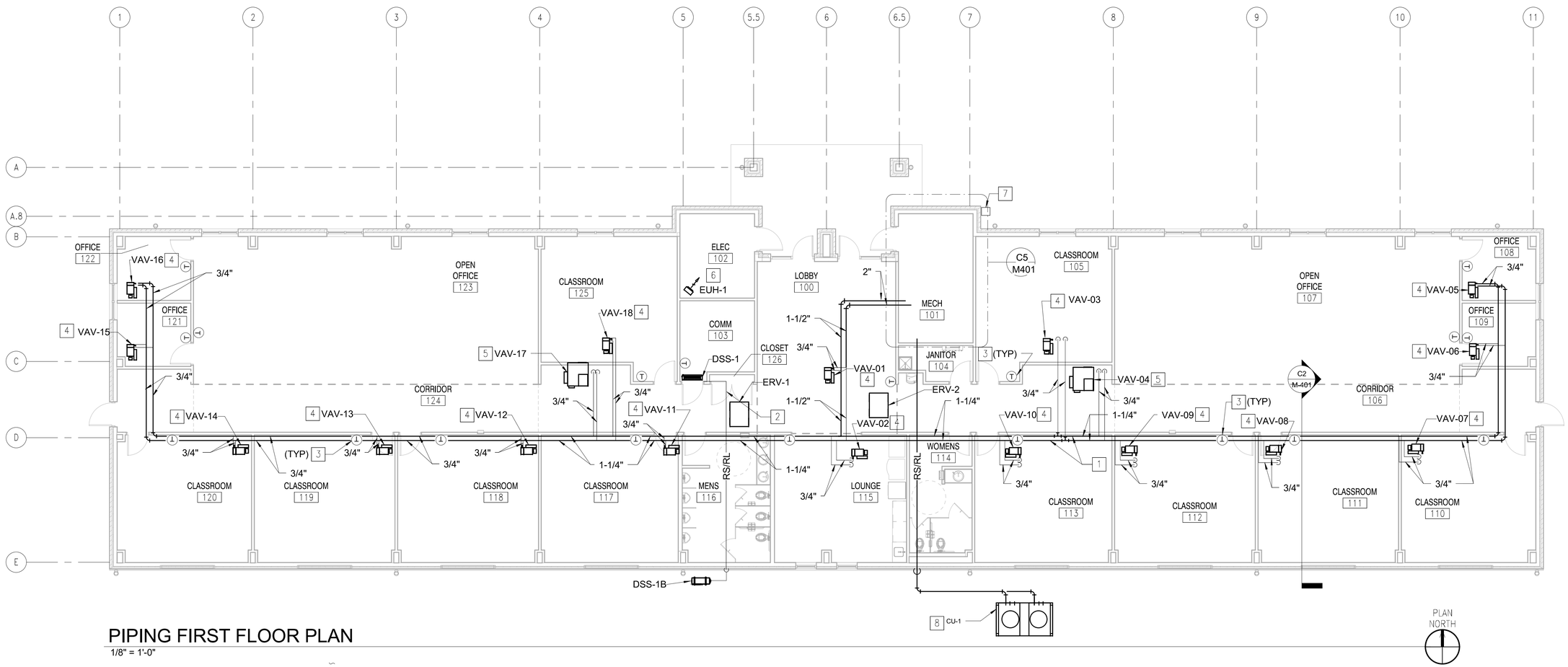

PIPING FIRST FLOOR PLAN

1/8" = 1'-0"

CONSTRUCTION NOTES

1. PROVIDE INSULATED HW SUPPLY AND RETURN PIPING, HANGERS, AND SUPPORTS COMPLETE. REFER TO DETAIL A3 ON DRAWING M-501 AND C4 ON DRAWING M-502.
2. PROVIDE SLOPED CONDENSATE DRAIN PIPING, HANGERS, AND SUPPORTS. REFER TO DETAIL A1,A3 AND C4 ON DRAWING M-502.
3. PROVIDE TEMPERATURE SENSOR MOUNTED 42" AFF.
4. REFER TO VAV SHUT-OFF BOX DETAIL A1 ON DRAWING M-501.
5. REFER TO VAV BOX FAN-POWERED DETAIL C1 ON DRAWING M-502.
6. PROVIDE ELECTRIC HEATER; HANGERS AND SUPPORTS.
7. PROVIDE PROPANE METER AND 12 PSI TO 7-14" PROPANE REGULATOR.
8. PROVIDE RS/RL PIPING TO AIR HANDLER. PROVIDE HANGERS, INSULATION AND SUPPORTS.

BOWMAN FOSTER & ASSOCIATES, PC

SCALE: 1/8" = 1'-0" 0 4' 8' 16'

NAVFAC

NORTH CAROLINA PROFESSIONAL SEAL 20473 ENGINEER S. G. ROBERTS 02-03-16

HBA

A/E INFO

APPROVED

FOR COMMANDER NAVFAC

ACTIVITY

SATISFACTORY TO DATE

DES	KNC	DRW	LAW	CHK	MED

PM

BRANCH MANAGER

CHIEF ENG/ARCH

FIRE PROTECTION

DEPARTMENT OF THE NAVY
NAVAL FACILITIES ENGINEERING COMMAND
NORTH CAROLINA IPT
NAVAL STATION – NORFOLK, VIRGINIA

MCB CAMP LEJEUNE
JACKSONVILLE, NC

P-1475 CULTURAL ASSIMILATION FACILITY

PIPING FLOOR PLAN

SCALE: GRAPHIC
EPROJECT NO.: 13-86-337
CONSTR. CONTR. NO. N40085-10-D-5301
NAVFAC DRAWING NO. 12711927
SHEET 55 OF 81

M-102

DRAWFORM REVISION: 10 MAY 2014

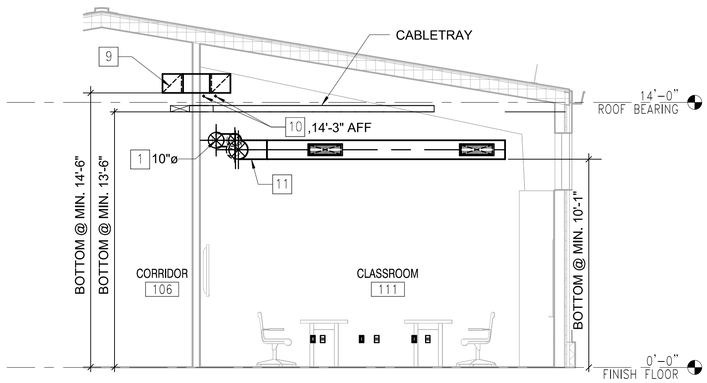

BUILDING SECTION

1/4" = 1'-0"

M-101 C2

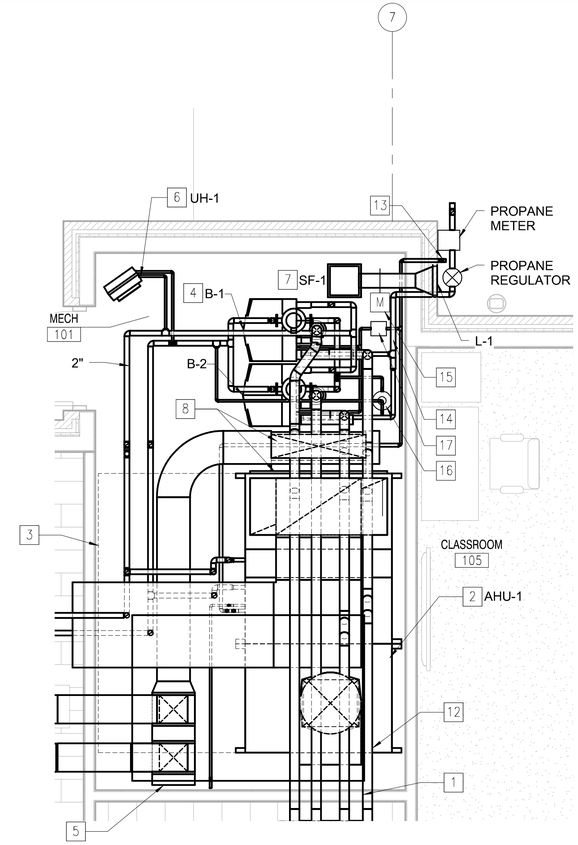

ENLARGED MECHANICAL ROOM PLAN

3/8" = 1'-0"

M-101 C5

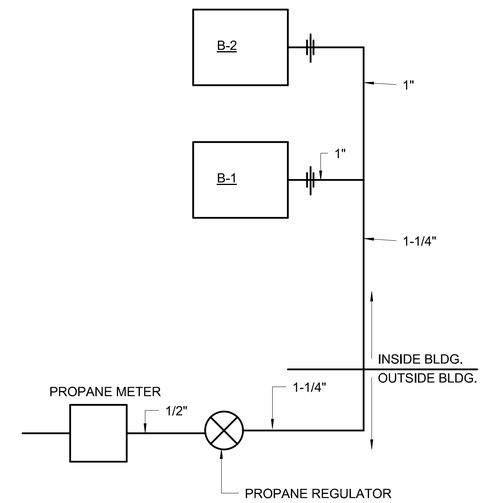

PROPANE RISER DIAGRAM

NOT TO SCALE

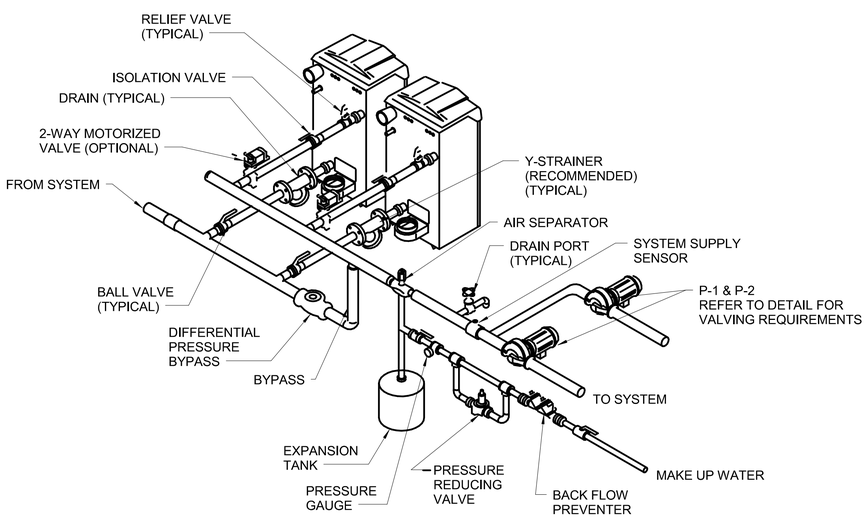

HYDRONIC PIPING DIAGRAM

NOT TO SCALE

CONSTUCTION NOTES

1. PROVIDE DOUBLE WALL DUCTWORK , HANGERS, AND SUPPORTS COMPLETE. DUCTWORK SHALL BE PROVIDED WITH PAINTGRIP FINISH.
2. PROVIDE AIR HANDLING UNIT ON VIBRATION ISOLATION PADS. PROVIDE FLEXIBLE CONNECTIONS TO DUCTWORK AND PIPING. PROVIDE REFRIGERANT PIPING TO CONDENSING UNIT. REFER TO DETAIL A1 ON DRAWING M-501.
3. AIR HANDLING UNIT SERVICE CLEARANCE.
4. PROVIDE BOILERS, ON HOUSEKEEPING PAD. PROVIDE VENTING PER MANUFACTURER'S RECOMMENDATIONS.
5. PROVIDE EXHAUST AIR DUCTWORK, INSULATION, HANGERS, AND SUPPORTS.
6. PROVIDE HW UNIT HEATER, HANGERS AND SUPPORTS. REFER TO DTAIL A1 ON DRAWING M-503.
7. PROVIDE SUPPLY FAN, HANGERS, AND SUPPORTS.
8. PROVIDE INLINE PUMPS AND VALVE WORK AS REQUIRED. PROVIDE AIR SEPERATOR AND EXPANSION TANK FOR THE HW SYSTEM. REFER TO DETAIL C1 ON DRAWING M-501 AND HYDRONIC PIPING DIAGRAM THIS SHEET.
9. PROVIDE12"X12" Z-SHAPED LINED TRANSFER DUCT, HANGERS, AND SUPPORTS.
10. PROVIDE INSULATED HW SUPPLY AND RETURN PIPING, HANGERS, AND SUPPORTS COMPLETE.
11. PROVIDE SHUT-OFF VAV BOX, HANGERS AND SUPPORTS.
12. PROVIDE 4" DIAMETER FLUE AND OUTSIDE AIR INTAKE FOR BOILERS. REFER TO A4 ON M-502.
13. PROVIDE 1-1/4" AHU CONDENSATE DRAIN RUN THROUGH WALL AT 11" AFF, TURNED DOWN AND SPILL ON SPLASH BLOCK. PROVIDE P-TRAP AT AIR HANDLING UNIT, REFER TO DETAIL A1/M-502.
14. PROVIDE PROPANE PIPING. REFER TO PROPANE RISER ON THIS DRAWING.
15. PROVIDE LOW LEAKAGE MOTORIZED DAMPER.
16. PROVIDE CHEMICAL SHOT FEEDER.
17. PROVIDE CONDENSATE NEUTRALIZATION TANK ON BOILER CONDENSATE PIPING.

BOWMAN FOSTER & ASSOCIATES, PC

SCALE: 1/4" = 1'-0" (0, 2', 4', 8')

SCALE: 3/8" = 1'-0" (0, 1'-6", 3', 6')

MM	DESCRIPTION	DATE	APPR

NAVFAC

NORTH CAROLINA
A. L. ZIMMERMAN
2014
07-03-16
S. G. ROBERTS
SEAL

HBA
A/E INFO

APPROVED
FOR COMMANDER NAVFAC
ACTIVITY
SATISFACTORY TO DATE

DES	KNC	DRW	LAW	CHK	MED

PM
BRANCH MANAGER
CHIEF ENG/ARCH
FIRE PROTECTION

DEPARTMENT OF THE NAVY
NAVAL FACILITIES ENGINEERING COMMAND
NAVAL FACILITIES ENGINEERING COMMAND
NAVAL STATION – NORFOLK, VIRGINIA
NORTH CAROLINA PPT
MCB CAMP LEJEUNE
JACKSONVILLE, NC
P-1475 CULTURAL ASSIMILATION FACILITY
ENLARGED PLANS AND SECTIONS

SCALE: GRAPHIC
EPROJECT NO.: 13-86-337
CONSTR. CONTR. NO. N40085-10-D-5301
NAVFAC DRAWING NO. 12711928
SHEET 56 OF 81
M-401

DRAWFORM REVISION: 10 MAY 2014

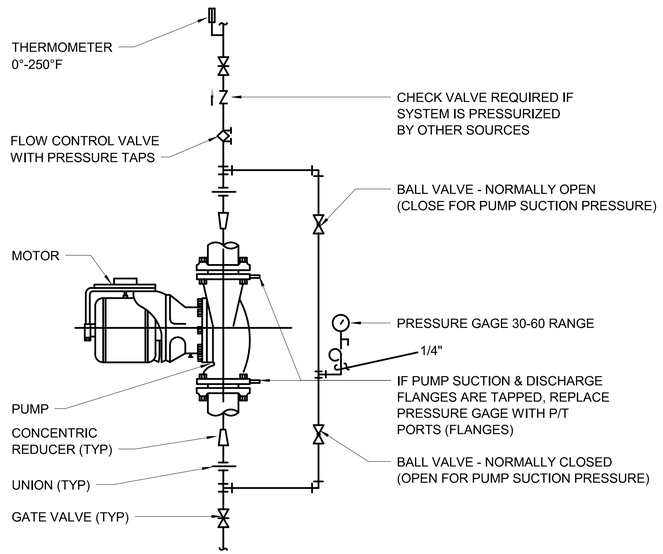

PUMP-INLINE CENTRIFUGAL DETAIL

NO SCALE

M-401 C1

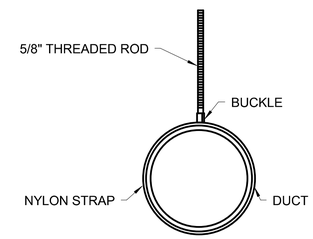

DUCT-HANGER-ROUND DETAIL

NO SCALE

M-101 C2

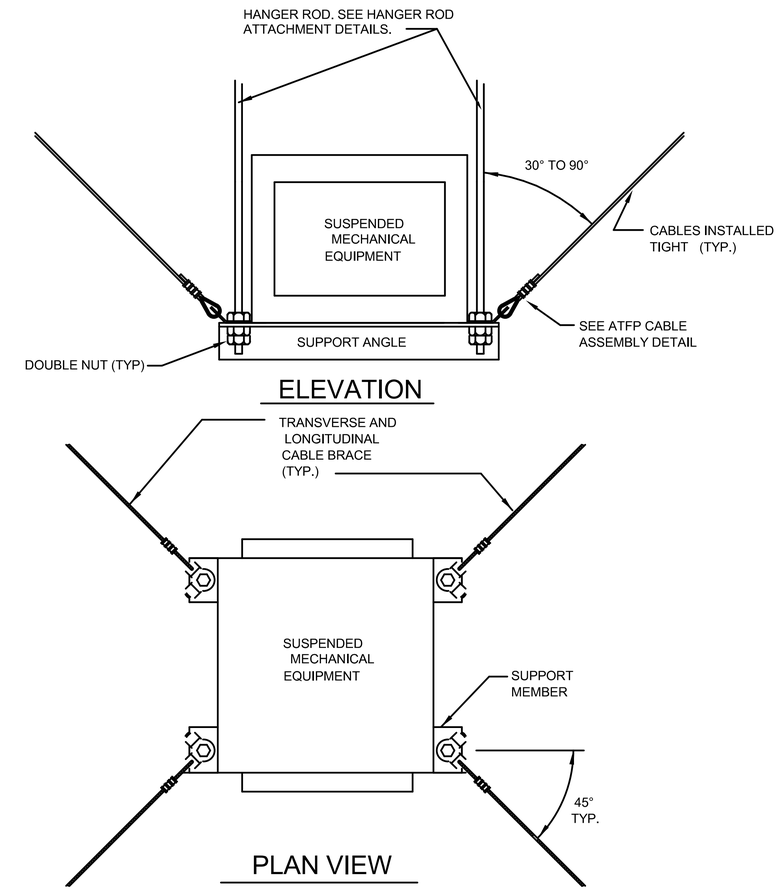

ATFP BRACING DETAIL FOR SUSPENDED MECHANICAL EQUIPMENT WITH INTERNAL VIBRATION ISOLATORS

NO SCALE

M-101 C4

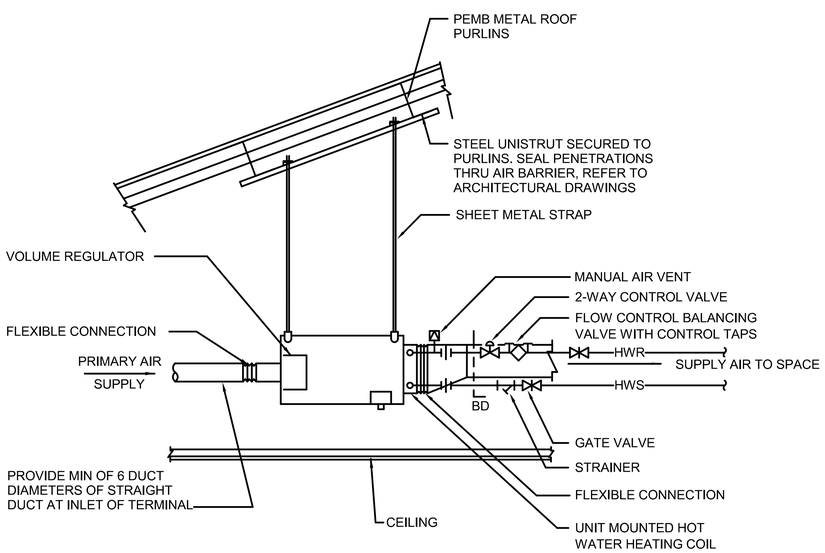

NOTE: VAV TERMINALS SHALL NOT BE MORE THAN 12" FROM THE ACT TILE FOR MAINTENANCE.

VAV SHUT OFF BOX DETAIL

NO SCALE

M-102 A1

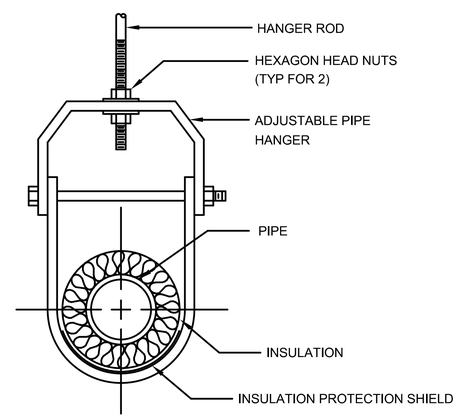

PIPE HANGER DETAIL

NO SCALE

M-102 A3

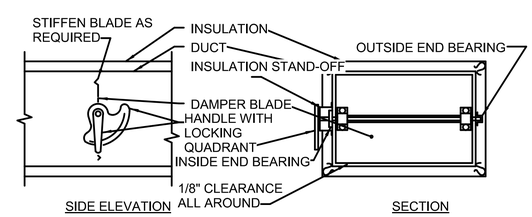

NOTE:

1. DELETE INSULATION STAND-OFF ON DUCTWORK WITHOUT EXTERIOR INSULATION.
2. DETAIL SHOWS SINGLE BLADE DAMPER. DAMPER INSTALLATION SHALL BE SIMILAR FOR MULTI-BLADE DAMPERS & ROUND DAMPERS.
3. END BEARINGS SHALL HAVE MOLDED SYNTHETIC INSERTS.

DAMPER-VOLUME DETAIL

NO SCALE

M-101 A4

MK	DESCRIPTION	DATE	APPR

NAVFAC

NORTH CAROLINA PROFESSIONAL SEAL 2043 03-03-16 S.G. ROBERTS

SEAL

HBA

A/E INFO

APPROVED

FOR COMMANDER NAVFAC

ACTIVITY

SATISFACTORY TO DATE

DES	KNC	DRW	LAW	CHK	MED

PM

BRANCH MANAGER

CHIEF ENG/ARCH

FIRE PROTECTION

DEPARTMENT OF THE NAVY
NAVAL FACILITIES ENGINEERING COMMAND
NAVAL FACILITIES ENGINEERING COMMAND — NORFOLK, VIRGINIA
NORTH CAROLINA IPT
NAVAL STATION —
MCB CAMP LEJEUNE
JACKSONVILLE, NC

P-1475 CULTURAL ASSIMILATION FACILITY

MECHANICAL DETAILS

SCALE: GRAPHIC
EPROJECT NO.: 13-86-337
CONSTR. CONTR. NO. N40085-10-D-5301
NAVFAC DRAWING NO. 12711929
SHEET 57 OF 81

M-501

BOWMAN FOSTER & ASSOCIATES, PC

DRAWFORM REVISION: 10 MAY 2014

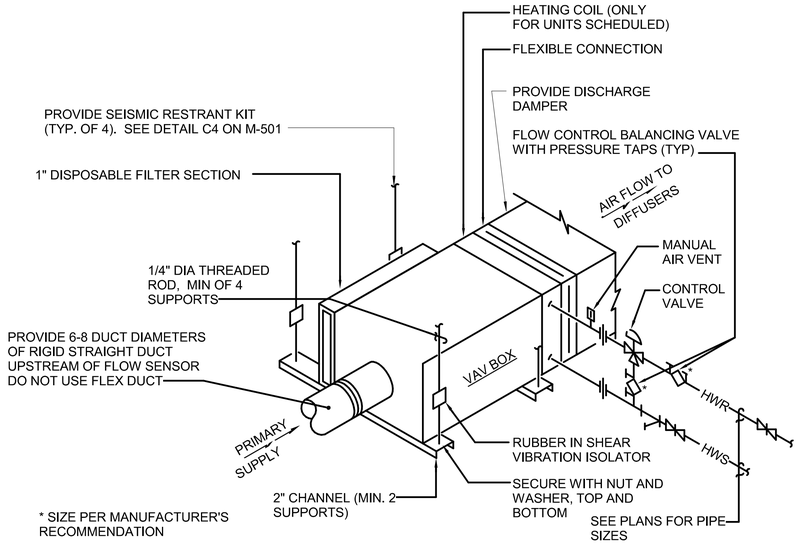

VAV BOX-FAN POWERED DETAIL

NO SCALE

M-102 C1

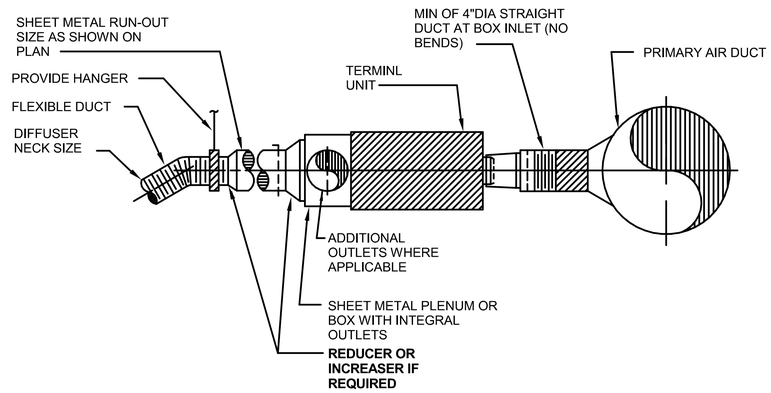

DUCT-TAKE OFF-TERMINAL UNIT DETAIL

NO SCALE

M-101 C3

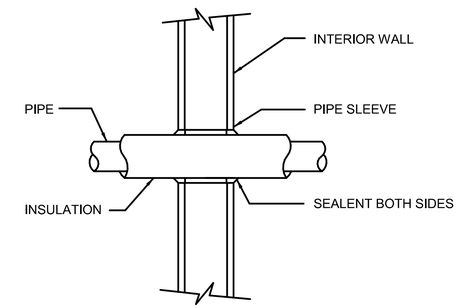

PIPE-SLEEVE THRU INTERIOR WALL DETAIL

NO SCALE

M-102 C4

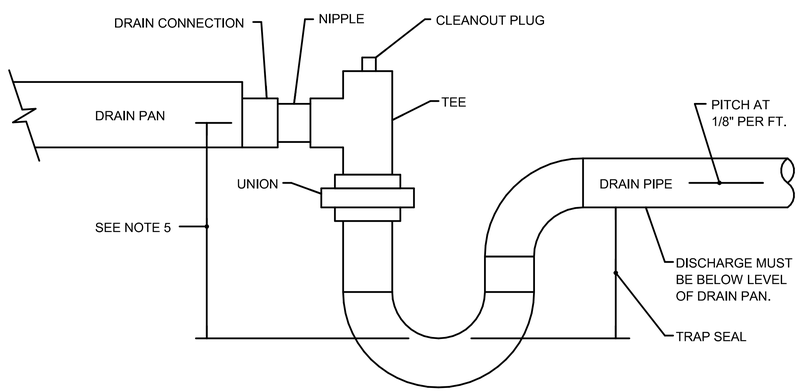

NOTES:

1. ALLOW SUFFICIENT SPACE BELOW DRAIN PAN FOR TRAP.
2. PITCH DRAIN FOR PROPER RUN-OFF.
3. MANUALLY PRIME FILL TRAP BEFORE START-UP TO FORM INITIAL DRY SEAL.
4. SUPPORT DRAIN LINES TO PREVENT SAG AND CONDENSATE OVERFLOW.
5. TRAP SEAL MUST BE APPROX. 1-1/2" GREATER THAN STATIC PRESSURE AT SUPPLY AIR PLENUM. (TYPICAL ALL CHILLED WATER COILS)

CONDENSATE DRAIN TRAP PIPING DETAIL

NO SCALE

M-102 A1

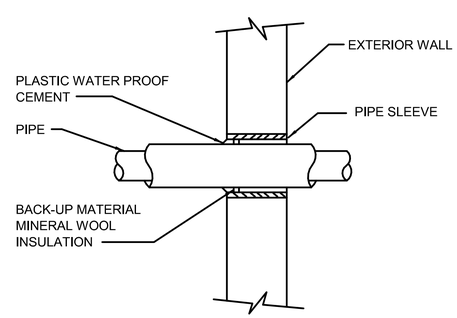

PIPE-SLEEVE THRU EXTERIOR WALL DETAIL

NO SCALE

M-102 A3

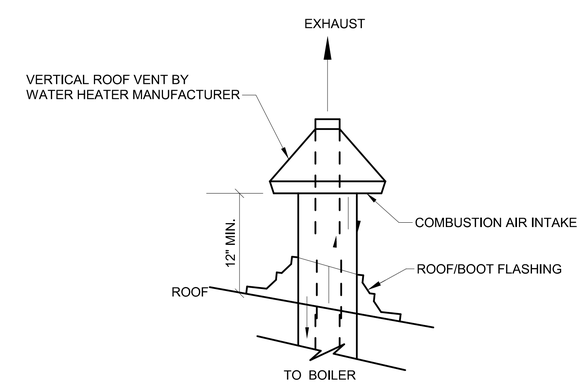

EXHAUST/COMBUSTION AIR DETAIL

NO SCALE

P-401 A4

BOWMAN FOSTER & ASSOCIATES, PC

MARK	DESCRIPTION	DATE	APPR		

NAVFAC

NORTH CAROLINA PROFESSIONAL SEAL 2013 07-03-16 S.G. ROBERTS

SEAL

HBA

A/E INFO

APPROVED

FOR COMMANDER NAVFAC

ACTIVITY

SATISFACTORY TO DATE

DES KNC | DRW LAW | CHK MED

PM

BRANCH MANAGER

CHIEF ENG/ARCH

FIRE PROTECTION

DEPARTMENT OF THE NAVY
NAVAL FACILITIES ENGINEERING COMMAND
NORTH CAROLINA IPT
NAVAL FACILITIES ENGINEERING COMMAND
NAVAL STATION – NORFOLK, VIRGINIA
MCB CAMP LEJEUNE
JACKSONVILLE, NC
P-1475 CULTURAL ASSIMILATION FACILITY
MECHANICAL DETAILS

SCALE: GRAPHIC
EPROJECT NO.: 13-86-337
CONSTR. CONTR. NO. N40085-10-D-5301
NAVFAC DRAWING NO. 12711930
SHEET 58 OF 81

M-502

DRAWFORM REVISION: 10 MAY 2014

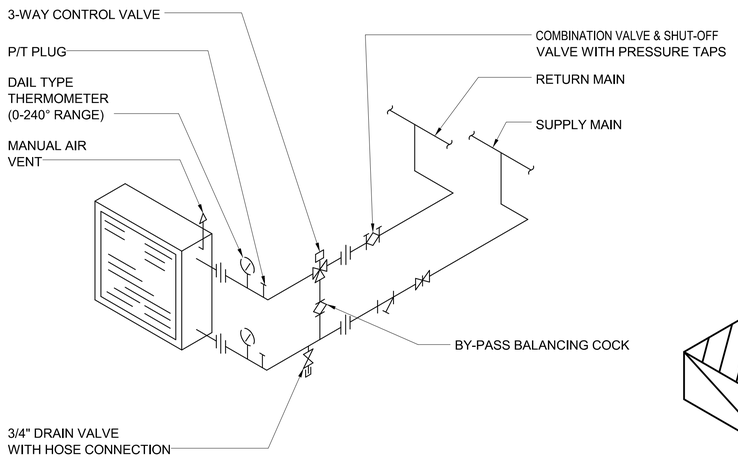

NOTES:

1. ARRANGE PIPING TO PERMIT REMOVAL OF COIL.
2. THE FLOW CONTROL BALANCING VALVES SHALL BE INSTALLED BY THE CONTRACTOR IN COMPLIANCE WITH VALVE MANUFACTURERS RECOMMENDED SPACING OF DOWNSTREAM FORM PIPE CHANGES IN DIRECTION AND/OR OTHER VALVES/COMPONENTS IN THE PIPING.

COIL-AHU PIPING DIAGRAM

NO SCALE M-401 A1

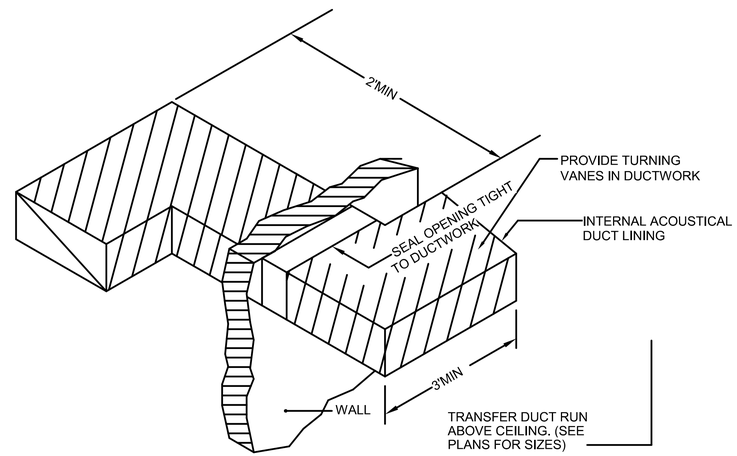

DUCT-TRANSFER-ISOMETRIC DETAIL

NO SCALE M-101 C2

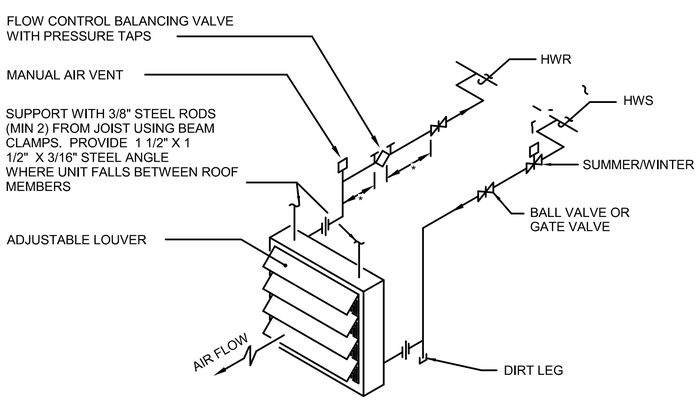

* THE FLOW CONTROL BALANCING VALVES SHALL BE INSTALLED BY THE CONTRACTOR IN CONFORMANCE WITH VALVE MANUFACTURER'S RECOMMENDED SPACING UP/DOWNSTREAM FROM PIPE CHANGES IN DIRECTION AND/OR OTHER VALVES/COMPONENTS IN THE PIPING.

UNIT HEATER-HORIZONTAL HOT WATER PIPING DETAIL

NO SCALE M-102 M-401 A1

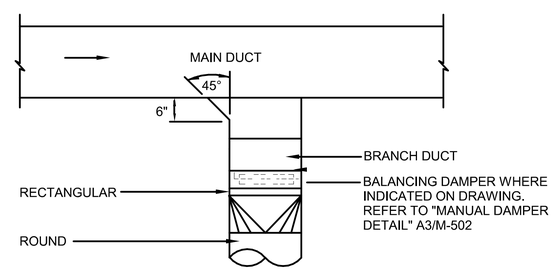

USE ONLY AT LAST TAKE-OFF BEFORE OUTLET & THEN ONLY WHERE RECTANGULAR RUNOUTS ARE INDICATED ON DRAWINGS.

DUCT-BRANCH CONNECTION DETAIL

NO SCALE M-101 A3

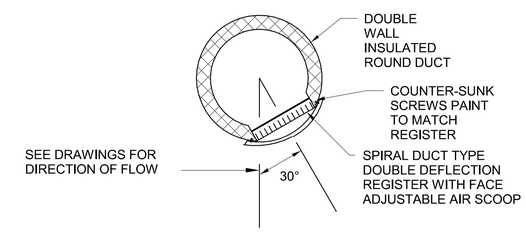

DUCT-REGISTER-SPIRAL DETAIL

NO SCALE M-101 A4

BOWMAN FOSTER & ASSOCIATES, PC

NAVFAC

NORTH CAROLINA PROFESSIONAL SEAL 20473 ENGINEER S. G. ROBERTS 02-03-16

HBA

A/E INFO

APPROVED

FOR COMMANDER NAVFAC

ACTIVITY

SATISFACTORY TO DATE

DES KNC DRW LAW CHK MED

PM

BRANCH MANAGER

CHIEF ENG/ARCH

FIRE PROTECTION

DEPARTMENT OF THE NAVY NAVAL FACILITIES ENGINEERING COMMAND

NORTH CAROLINA IPT NAVAL STATION – NORFOLK, VIRGINIA

MCB CAMP LEJEUNE JACKSONVILLE, NC

P-1475 CULTURAL ASSIMILATION FACILITY

MECHANICAL DETAILS

SCALE: GRAPHIC

EPROJECT NO.: 13-86-337

CONSTR. CONTR. NO. N40085-10-D-5301

NAVFAC DRAWING NO. 12711931

SHEET 59 OF 81

M-503

DRAWFORM REVISION: 10 MAY 2014

MODULAR BUILT-UP AIR HANDLING UNIT (AHU) SCHEDULE

	SUPPLY FAN DATA					DX COIL DATA								HOT WATER HEATING COIL DATA										FILTER DATA	ELECTRICAL DATA				
TAG	S.A. C.F.M. (MAX./MIN.)	O.A. C.F.M.	E.S.P. (IN. WG.)	T.S.P. (IN. WG.)	H.P.	TOTAL CAPACITY M.B.H.	SENS. CAPACITY M.B.H.	SENS. HEAT RATIO	E.D.B. (ºF)	E.W.B. (ºF)	L.D.B. (ºF)	L.W.B. (ºF)	COIL FACE VELOCITY FPM	TYPE	TOTAL CAPACITY M.B.H.	E.D.B. (ºF)	L.D.B. (ºF)	E.W.T. (ºF)	L.W.T. (ºF)	G.P.M.	MAX. A.P.D. (IN. WG.)	MAX. W.P.D. (FT. WG.)	COIL FACE VELOCITY FPM	EFFICIENCY	NEMA MOTOR STARTER	MCA	VOLTS	PHASE	REMARKS
AHU-1	5855/1835	1400	2.3	3.8	10	232.9	153.7	0.66	77.7	65.3	53.4	51.7	287	PREHEAT	226.4	20.0	55.8	160	140	22.6	0.1	3.2	305	MERV 13	2	29.5	208	3	SEE NOTES

NOTES:
1. LEAVING AIR TEMPERATURE IS TO BE PROVIDED AT THE UNIT DISCHARGE, TOTAL & SENSIBLE CAPACITIES ARE "NET" VALUES TO BE PROVIDED DOWNSTREAM OF THE SUPPLY AIR FAN.
2. PROVIDE WITH INVERTER DUTY RATED MOTOR(S) AND VARIABLE FREQUENCY DRIVE(S)
3. PROVIDE WITH THE FOLLOWING SECTIONS: MIXING BOX, FILTER, PREHEAT COIL, COOLING COIL, FAN, FINAL FILTER
4. COIL SHALL HAVE 3000 SALT-HOUR RESISTANT COATING.

SERIES FAN POWERED TERMINAL BOX SCHEDULE (HOT WATER)

		VOL. REG. C.F.M.		FAN CAPACITY		FAN MOTOR					HEATING COIL					
TAG	INLET SIZE (IN.)	MIN.	MAX.	C.F.M.	ESP (IN. WG.)	H.P.	VOLTS	PHASE	FLA	HP	M.B.H.	G.P.M.	W.P.D. (FT. WG.)	A.P.D. (IN. WG.)	MAXIMUM SOUND RATING (NC)	REMARKS
VAV-04	10"	265	870	870	0.5	HP	115	1	4.7	1/4	18.0	1.8	0.3	0.16	<25	SEE NOTES
VAV-17	10"	295	970	970	0.5	HP	115	1	4.7	1/4	20.0	2.0	0.3	0.2	<25	SEE NOTES

NOTES:
1. PROVIDE WITH NEC APPROVED STARTER.

GRILLE, REGISTER & DIFFUSER SCHEDULE

TAG	TYPE	SERVICE	C.F.M. RANGE	NECK SIZE	MAX. P.D.	MANUFACTURER/ MODEL NO.	REMARKS
A	DIFFUSER	SUPPLY	0-100	6"	0.1	AMD	SEE NOTES
B	REGISTER	SUPPLY	100-105	14X4	0.1	SCDE	SEE NOTES
C	DIFFUSER	SUPPLY	0-100	6"	0.1	AMD	SEE NOTES
D	GRILLE	EXHAUST	0-900	20X18	0.1	500	SEE NOTES
Z	GRILLE	EXHAUST	12X12	12X12	0.1	500	SEE NOTES

THE FOLLOWING NOTES ARE TYPICAL UNLESS OTHERWISE NOTED:
1. PROVIDE 24X24 GRILLE WHEN MOUNTED IN ACT GRID SYSTEM.
2. PROVIDE ALUMINUM DIFFUSERS AND REGISTERS WITH OPPOSED BLADE VOLUME DAMPERS, BAKED STANDARD WHITE ENAMEL FINISH WITH THE EXCEPTION OF D. D GRILLES SHALL BE BLACK ENAMEL FINISH. (INCLUDING HEAD OF SCREWS), MAXIMUM NC=25 AT HIGHEST CFM AND PROVIDE SQUARE TO ROUND TRANSITION AS REQUIRED.
3. PROVIDE 4-WAY PATTERN CEILING DIFFUSERS, U.O.N. ON PLANS OR SCHEDULE.
4. MAXIMUM PRESSURE DROP SHALL INCLUDE VOLUME DAMPER WHERE DAMPER IS PROVIDED.

DUCTLESS SPLIT SYSTEM AIR CONDITIONER SCHEDULE

			COIL E.A.T.		FAN DATA			ELECTRIC DATA INDOOR UNIT				ELECTRIC DATA OUTDOOR UNIT				
MARK	LOCATION	TOTAL COOLING CAPACITY M.B.H.	ºF D.B.	ºF W.B.	SUPPLY AIR C.F.M.	E.S.P. (IN. WG.)	SEER	M.C.A.	M.O.C.P.	VOLTS	PHASE	M.C.A.	M.O.C.P.	VOLTS	PHASE	REMARKS
DSS-1A	COM	18.0	80.0	67.0	380	0.00	15.3	POWERED FROM OUTDOOR UNIT				13.0	15.0	208	1	SEE NOTES

NOTES:
1. CONDENSOR COIL SHALL HAVE A 3000 SALT HOUR RESISTANT COATING.
2. COOLING CAPACITY BASED ON 95º F AMBIENT.
3. PROVIDE INDOOR UNIT WITH COIL FREEZE PROTECTION, REMOTE MOUNTED THERMOSTAT, CONDENSATE PUMP, HIGH SIDE WALL CASSETT CONFIGURATION.
4. PROVIDE OUTDOOR UNIT, DSS-1B, WITH LOW AMBIENT CONTROL.

FAN SCHEDULE

TAG	LOCATION	FAN TYPE	C.F.M.	E.S.P. (IN. WG.)	MAX SONES	DRIVE	WATTS	VOLTS	PHASE	MODEL NO.	REMARKS
EF-1	102	CABINET	150	0.35	38	DIRECT	100.00	115	1	CPS-A190	SEE NOTES
SF-1	101	CABINET	150	0.35	38	DIRECT	100.00	115	1	CPS-A190	SEE NOTES

NOTES:
1. PROVIDE DIRECT DRIVE FANS WITH ELECTRONIC SPEED CONTROLLER.
2. PROVIDE CABINET CEILING FANS WITH CHATTERPROOF BDD, INTEGRAL ELECTRICAL DISCONNECT, DUCT FLANGE, AND INTEGRAL OFF-WHITE ALUMINUM INTAKE GRILLE.

PUMP SCHEDULE

					MOTOR				
TAG	SERVICE	TYPE	G.P.M.	HEAD (FT.)	H.P.	VOLTS	PHASE	R.P.M.	REMARKS
P-1	HOT WATER	INLINE	55.0	40.0	1	208	1	1750	SEE NOTES
P-2	HOT WATER	INLINE	55.0	40.0	1	208	1	1750	SEE NOTES

NOTES:
1. PROVIDE NON-OVERLOADING MOTOR SELECTION.
2. PROVIDE WITH MOTOR STARTER SIZED IN ACCORDANCE WITH NEMA RECOMMENDATIONS.
3. PROVIDE INVERTER DUTY RATED MOTOR SUITABLE FOR USE WITH A VFD.

ELECTRIC UNIT HEATER SCHEDULE

UNIT NO.	WATTS	VOLTS	PHASE	NO. OF STEPS	B.T.U.H.	NOMINAL C.F.M.	REMARKS
EUH-1	3300	208	3	1	11200.0	400	SEE NOTES

NOTES:
1. PROVIDE WITH INTEGRAL TAMPER RESISTANT THERMOSTAT, INTEGRAL ELECTRICAL DISCONNECT AND BLOWER.

SHUT OFF V.A.V. TERMINAL BOX SCHEDULE (HOT WATER)

		VOL. REG. C.F.M.		MAX INLET S.P. (IN. WG.)	HEATING COIL					
TAG	INLET SIZE (IN.)	MIN.	MAX.		M.B.H.	G.P.M.	W.P.D. (FT. WG.)	A.P.D. (IN. WG.)	MAXIMUM SOUND RATING (NC)	REMARKS
VAV-01	6"	60	190	0.8	3.9	0.39	0.07	0.04	26	SEE NOTES
VAV-02	7"	90	350	0.8	7.2	0.72	0.09	0.07	<25	SEE NOTES
VAV-03	7"	95	315	0.8	7.2	0.65	0.07	0.01	<25	SEE NOTES
VAV-05	4"	45	95	0.8	6.5	0.30	0.17	0.17	<25	SEE NOTES
VAV-06	4"	50	95	0.8	2.0	0.30	0.07	0.01	<25	SEE NOTES
VAV-07	7"	100	320	0.8	2.0	0.66	0.07	0.01	<25	SEE NOTES
VAV-08	7"	100	320	0.8	6.6	0.66	0.09	0.09	<25	SEE NOTES
VAV-09	7"	100	320	0.8	6.6	0.66	0.09	0.09	<25	SEE NOTES
VAV-10	7"	100	320	0.8	6.6	0.66	0.09	0.09	<25	SEE NOTES
VAV-11	7"	100	320	0.8	6.6	0.66	0.09	0.09	<25	SEE NOTES
VAV-12	7"	100	320	0.8	6.6	0.66	0.09	0.09	<25	SEE NOTES
VAV-13	7"	100	320	0.8	6.6	0.66	0.09	0.09	<25	SEE NOTES
VAV-14	7"	100	320	0.8	6.6	0.66	0.09	0.09	<25	SEE NOTES
VAV-15	4"	50	95	0.8	6.6	0.30	0.09	0.09	<25	SEE NOTES
VAV-16	4"	50	95	0.8	2.0	0.30	0.07	0.01	<25	SEE NOTES
VAV-18	7"	100	320	0.8	2.0	0.66	0.07	0.01	<25	SEE NOTES

NOTES:
1. HEATING COIL SELECTION BASED ON 55ºF E.A.T. AT 50% OF MAX. AIRFLOW.
2. SELECT UNITS FOR MAXIMUM NOISE CRITERIA OF 35.

MK	DESCRIPTION	DATE	APPR

NAVFAC

HBA

A/E INFO

APPROVED

FOR COMMANDER NAVFAC

ACTIVITY

SATISFACTORY TO DATE

DES KNC DRW LAW CHK MED

PM

BRANCH MANAGER

CHIEF ENG./ARCH

FIRE PROTECTION

DEPARTMENT OF THE NAVY
NAVAL FACILITIES ENGINEERING COMMAND
NAVAL FACILITIES ENGINEERING COMMAND — NORFOLK, VIRGINIA
NORTH CAROLINA IPT
MCB CAMP LEJEUNE
JACKSONVILLE, NC
P-1475 CULTURAL ASSIMILATION FACILITY
MECHANICAL SCHEDULES

SCALE: GRAPHIC
EPROJECT NO.: 13-86-337
CONSTR. CONTR. NO. N40085-10-D-5301
NAVFAC DRAWING NO. 12711932
SHEET 60 OF 81
M-601

DRAWFORM REVISION: 10 MAY 2014

ENERGY RECOVERY UNIT

TAG	SERVES	SUMMER E.A./E.A.T. (°F DB/WB)	SUMMER O.A./E.A.T. (°F DB/WB)	SUMMER S.A./L.A.T. (°F DB/WB)	SUMMER MIN. EFF.	SUPPLY AIR FAN C.F.M.	SUPPLY AIR FAN FILTRATION	SUPPLY AIR FAN E.S.P. (IN. W.G.)	SUPPLY AIR FAN H.P.	SUPPLY AIR FAN NEMA MOTOR STARTER	SUPPLY AIR FAN FILTERS	EXHAUST AIR FAN C.F.M.	EXHAUST AIR FAN FILTRATION	EXHAUST AIR FAN (IN. W.G.)	EXHAUST AIR FAN E.S.P. H.P.	EXHAUST AIR FAN FILTERS	ELECTRICAL DATA VOLTS	ELECTRICAL DATA PHASE	ELECTRICAL DATA M.C.A.	ELECTRICAL DATA M.F.S.
ERV-1	AHU-1	74/68	93.8/79.9	80.9/68.6	50	700	MERV 13	0.50	1/3	00	MERV 13	520	MERV 8	0.50	1/3	MERV 8	115	1	18.3	25.0
ERV-2	AHU-1	74/68	93.8/79.9	80.9/68.6	50	700	MERV 13	0.50	1/3	00	MERV 13	520	MERV 8	0.50	1/3	MERV 8	115	1	18.3	25.0

NOTES:
1. PROVIDE ENTHALPY WHEEL TYPE HEAT EXCHANGER WITH CONDENSATE DRAIN PAN, DUCT FLANGES, 2" THROW AWAY O.A. FILTERS, INSULATED STEEL HOUSING, ACCESS DOORS FOR FILTER AND FAN MAINTENANCE WITH CONTINUOUS HINGE AND COMPRESSION LATCHES. PROVIDE WITH WHEEL ROTATION SENSOR AND MOTORIZED O.A. AND E.A. INTAKE DAMPERS. FANS SHALL BE INTERNALLY ISOLATED.
2. ESP SHOWN IS INCLUSIVE OF THE DUCT SYSTEMS EXTERNAL TO THE UNIT AND DOES NOT INCLUDE THE FILTER AND OTHER AIR PRESSURE LOSSES WITHIN THE UNIT.
3. PROVIDE SINGLE POINT ELECTRIC CONNECTION.

OA SCHEDULE AHU-1

ROOM NO.	MIN OA REQUIRED	ANTICIPATED NUMBER OF OCCUPANTS
VAV-01	38	0
VAV-02	90	10
VAV-03	73	7
VAV-04	229	15
VAV-05	14	1
VAV-06	13	1
VAV-07	71	7
VAV-08	72	7
VAV-09	72	7
VAV-10	72	7
VAV-11	72	7
VAV-12	72	7
VAV-13	72	7
VAV-14	71	7
VAV-15	13	1
VAV-16	14	1
VAV-17	228	15
VAV-18	73	7.0

NOTE:
1. THE NUMBER OF OCCUPANTS LISTED IS FOR INFORMATION PURPOSES ONLY.
2. ASHRAE 62.1 CALCULATIONS HAVE BEEN PERFORMED USING 0.8 VENTILATION EFFECTIVENESS FOR HEATING AND 1.0 FOR WATER. CALCULATION HAS BEEN COMPLETED FOR A MULTIZONE SYSTEM.

DUCTWORK CONSTRUCTION AND LEAKAGE TESTING SCHEDULE

SYSTEM	DUCT PRESSURE CLASS INCHES OF WATER COLUMN SUPPLY	RETURN	EXHAUST	OA	SUPPLY ROUND/OVAL DUCT SEAL CLASS	ROUND/OVAL DUCT LEAK CLASS	RECTANGULAR DUCT SEAL CLASS	RECTANGULAR DUCT LEAK CLASS	RETURN/OUTSIDE AIR DUCT SEAL CLASS	RETURN/OUTSIDE AIR DUCT LEAK CLASS	DUCT TEST: PRESSURE INCHES OF WATER COLUMN	NOTES
VAV AIR HANDLER	4	-	-	-	A	3	A	6	-	-	4.0	1
	-	-2	-	-	-	-	-	-	A	24	2.0	1
VAV BOX	2	-	-	-1	A	6	-	-	-	-	2.0	1
EXHAUST DUCT	-	-	-1	-	-	-	A	24	-	-	1.0	1

NOTES:
1. TEST IN ACCORDANCE WITH UFGS 23 05 93, TESTING, ADJUSTING AND BALANCING FOR HVAC AND THE PROCEDURES SMACNA HVAC AIR DUCT LEAKAGE TEST MANUAL

LOUVER SCHEDULE

TAG	SERVICE	SIZE (IN.) WxH	FREE AREA (SF)	C.F.M.	SERVES	REMARKS
L-1	INTAKE	12X12	0.3	150	SF-1	SEE NOTES
L-2	EXHAUST	12X12	0.2	150	EF-1	SEE NOTES
L-3	EXHAUST	36X24	1.7	1260	ERV-1/2	SEE NOTES
L-4	INTAKE	36X24	2.8	1400	ERV-1/2	SEE NOTES

NOTES:
1. PROVIDE INSECT SCREEN FOR INTAKE SERVICE, BIRDSCREEN FOR EXHAUST SERVICE.
2. PROVIDE ALUMINUM STORMPROOF CONSTRUCTION.
3. PROVIDE COLOR CHART FOR FINISH SELECTION BY ARCHITECT.
4. PROVIDE "KYNAR" FINISH OR EQUAL.
5. COORDINATE WITH PEMB SPEC SECTION 13 34 19.
6. LOVERS SHALL BE INSTALLED WITH LOW LEAKAGAGE MOTORIZED DAMPERS FULL SIZE OF THE LOUVER. LOW LEAKAGE DAMPERS SHALL HAVE A MAXIMUM LEAKAGE RATE OF 3 CFM/SF.

AIR CONTROL SCHEDULE

SYSTEM	AIR SEPARATOR G.P.M.	AIR SEPARATOR MAX. P.D. FT.	AIR SEPARATOR SIZE	EXPANSION TANK CAPACITY (GAL.)	EXPANSION TANK ACCEPTED CAPACITY (GAL.)	EXPANSION TANK APPROX. DIAMETER	EXPANSION TANK APPROX. HEIGHT	REMARKS
HOT WATER	55.0	5.0	2	30	15	24	36	SEE NOTES

NOTES:
1. PROVIDE CENTRIFUGAL TYPE AIR SEPARATOR WITH HIGH CAPACITY AIR VENT.

HOT WATER UNIT HEATER

TAG	C.F.M.	WATTS	M.B.H.	P.D. FT.	AIR TEMPERATURE E.A.T	AIR TEMPERATURE L.A.T.	GPM	E.W.T.	L.W.T.	REMARKS
UH-1	245	16	8.0	0.8	50.0	83.3	1.9	160	140	SEE NOTES

NOTES:
1. PROVIDE WITH WALL MOUNTED THERMOSTAT.

AIR COOLED CONDENSING UNIT SCHEDULE

TAG	SERVES	MIN. REFRIG. EFFECT (M.B.H.)	O.A. TEMP. (°F D.B.)	COMPRESSOR MOTOR(S) NO.	COMPRESSOR MOTOR(S) R.L.A. (EACH)	CONDENSER FAN MOTORS NO.	CONDENSER FAN MOTORS F.L.A. (EACH)	ELECTRICAL CHARACTERISTICS M.C.A.	ELECTRICAL CHARACTERISTICS M.O.C.P.	ELECTRICAL CHARACTERISTICS VOLTS	ELECTRICAL CHARACTERISTICS PHASE	NOTES
CU-1	AHU-1	270.0	95.0	4.00	10.6	2.00	2.1	125.1	175.0	208	3	SEE NOTES

NOTES:
1. CONDENSER COIL SHALL HAVE 3000 SALT-HOUR RESISTANT COATING.
2. PROVIDE SAME MANUFACTURER AS ASSOCIATED AIR HANDLER.

HVAC DESIGN CONDITIONS

CONDITIONED AREA	INDOORS SUMMER °F D.B.	INDOORS SUMMER % R.H.	INDOORS WINTER °F D.B.	OUTDOORS SUMMER °F D.B.	OUTDOORS SUMMER °F W.B.	OUTDOORS WINTER °F D.B.
OCCUPIED SPACES	78 º	50	70º	91.4º	75.8º	24.8º
MECHANICAL/ELECTRICAL SPACES	10º BELOW AMBIENT		55º	91.4º	75.8º	24.8º

VIBRATION ISOLATION SCHEDULE

EQUIPMENT TYPE	TAG	BASE TYPE	ISOLATOR TYPE	MIN. STATIC DEFLECTION (LOADED)
INLINE PUMPS	P-1 & P-2	NO BASE - ISOLATORS ATTACHED DIRECTLY TO EQUIPMENT	ISOLATION HANGERS	0.75 IN
AIR HANDLING UNIT	AHU-1	STEEL FRAME	RESILENT STEEL SPRINGS OR NEOPRENE PADS	1.0 IN
ENERGY RECOVERY UNIT	ERU-1 & ERU-2	NO BASE - ISOLATORS ATTACHED DIRECTLY TO EQUIPMENT	ISOLATION HANGERS	0.25 IN

GAS FIRED HOT WATER BOILER SCHEDULE

TAG	FUEL	BURNER PERFORMANCE INPUT M.B.H.	OUTPUT M.B.H.	BURNER EFF. %	FIRE RATING C.F.H.	VOLTS	PHASE	HEATING PERFORMANCE TOTAL CAPACITY (M.B.H.)	G.P.M. MAX/ MIN	L.W.T. (°F)	E.W.T. (°F)	CONNECTIONS FLUE Ø (IN)	GAS (IN)	REMARKS
B-1	PROPANE LP	500	413	94	500	120	1	413.0	41.3/15	160	140	4	1	SEE NOTES
B-2	PROPANE LP	500	413	94	500	120	1	413.0	41.3/15	160	140	4	1	SEE NOTES

NOTES:
1. PROVIDE WITH UL, IRI, FM APPROVED GAS TRAIN FOR OPERATION AT 7-14" WC, AND RELIEF VALVE.

BOWMAN FOSTER & ASSOCIATES, PC

NAVFAC

SEAL: NORTH CAROLINA REGISTERED PROFESSIONAL ENGINEER SEAL 20413 07-03-16 S.G. ROBERTS

HBA

A/E INFO

APPROVED

FOR COMMANDER NAVFAC

ACTIVITY

SATISFACTORY TO DATE

DES KNC DRW LAW CHK MED

PM

BRANCH MANAGER

CHIEF ENG./ARCH

FIRE PROTECTION

NAVAL FACILITIES ENGINEERING COMMAND — NAVAL STATION — NORFOLK, VIRGINIA

DEPARTMENT OF THE NAVY — NAVAL FACILITIES ENGINEERING COMMAND

NORTH CAROLINA IPT — MCB CAMP LEJEUNE — JACKSONVILLE, NC

P-1475 CULTURAL ASSIMILATION FACILITY

MECHANICAL SCHEDULES

SCALE: GRAPHIC

EPROJECT NO.: 13-86-337

CONSTR. CONTR. NO. N40085-10-D-5301

NAVFAC DRAWING NO. 12711933

SHEET 61 OF 81

M-602

DRAWFORM REVISION: 10 MAY 2014

UNCLASSIFIED//FOR OFFICIAL USE ONLY

SYSTEM POINT LIST

SYSTEM POINT DESCRIPTION	DESIGNATION	GRAPHIC	ANALOG INPUT: TEMPERATURE	PRESSURE	RH	KW	GPM	CFM	PPM	PERCENT	PERCENT RLA	ANALOG OUTPUT: DDC	SETPOINT ADJ.			DIGITAL INPUT: PNEU. TRANSDUCER	STATUS ON/OFF	FILTER STATUS	STATUS OPEN/CLSD.	STATUS PRESSURE	DIGITAL OUTPUT: STATUS	OFF/ON	OPEN/CLOSE	LOCK OUT	ENABLE/DISABLE	SYSTEMS FEATURES – ALARMS: HIGH ANALOG	LOW ANALOG	BINARY	PROOF	SENSOR FAIL	FLOW FAIL	COMM. FAIL	DIAGNOSTICS	PROGRAMS: TIME SCHEDULING	OPT. START/STOP	DEMAND LIMITING	RESET	EVENT PROGRAM	DDC	ALARM INSTRUCT	MAINT. WK. ORD.	RUN TIME	EXP. MESSAGE	SET BACKSET UP	NIGHT PURGE	TENANT BILLING	TOTALIZING	TIMED OVERRIDE		NOTES
EQUIPMENT/CONDITION AIR HANDLING UNIT AHU-1 AND ACCU-1																																																					
SUPPLY AIR TEMPERATURE	AI1	X	X																							X	X			X																							
SUPPLY AIR STATIC PRESSURE	AI2	X		X																						X	X			X																							
RETURN AIR TEMP	AI3	X	X																							X	X			X																							
RETURN AIR HUMIDITY	AI4	X			X																																																
FILTER DIFFERENTIAL PRESSURE	AI5	X		X																						X	X			X																							
MIXED AIR TEMP	AI6	X	X																							X	X			X																							
VENTILATION AIRFLOW	AI7	X						X																		X	X			X																							
OUTSIDE AIR TEMPERATURE	AI8	X	X																																																		
OUTSIDE AIR HUMIDITY	AI9	X			X																																																
BUILDING STATIC PRESSURE	AI10	X		X																						X	X			X																							
FREEZESTAT	AI11	X	X																							X	X			X																							
SUPPLY FAN VFD SPEED	AO2	X										X		X																																							
MIXED AIR DAMPERS	AO3	X										X		X																																							
SUPPLY AIR SMOKE DETECTOR	DI1	X															X																							X	X													
HIGH STATIC SHUTDOWN	DI2	X																			X																				X													
SUPPLY FAN VFD FAULT	DI3	X																			X																				X													
EMERGENCY SHUTDOWN SWITCH	DI4	X															X																								X													
SUPPLY FAN STATUS	DI5	X															X																								X			X										
CONDENSING UNIT STATUS	DI6	X															X																																				
RETURN AIR SMOKE DETECTOR	DI7	X															X																							X	X													
SUPPLY FAN START/STOP	DO1	X																				X																				X												
DX COOLING STAGE 1	DO2	X																				X																															
DX COOLING STAGE 2	DO3	X																				X																															
DX COOLING STAGE 3	DO4	X																				X																															
DX COOLING STAGE 4	DO5	X																				X																															
PREHEATING COIL VALVE	DO6	X																				X																															
EMERGENCY SHUTOFF	DI8	X															X																																				

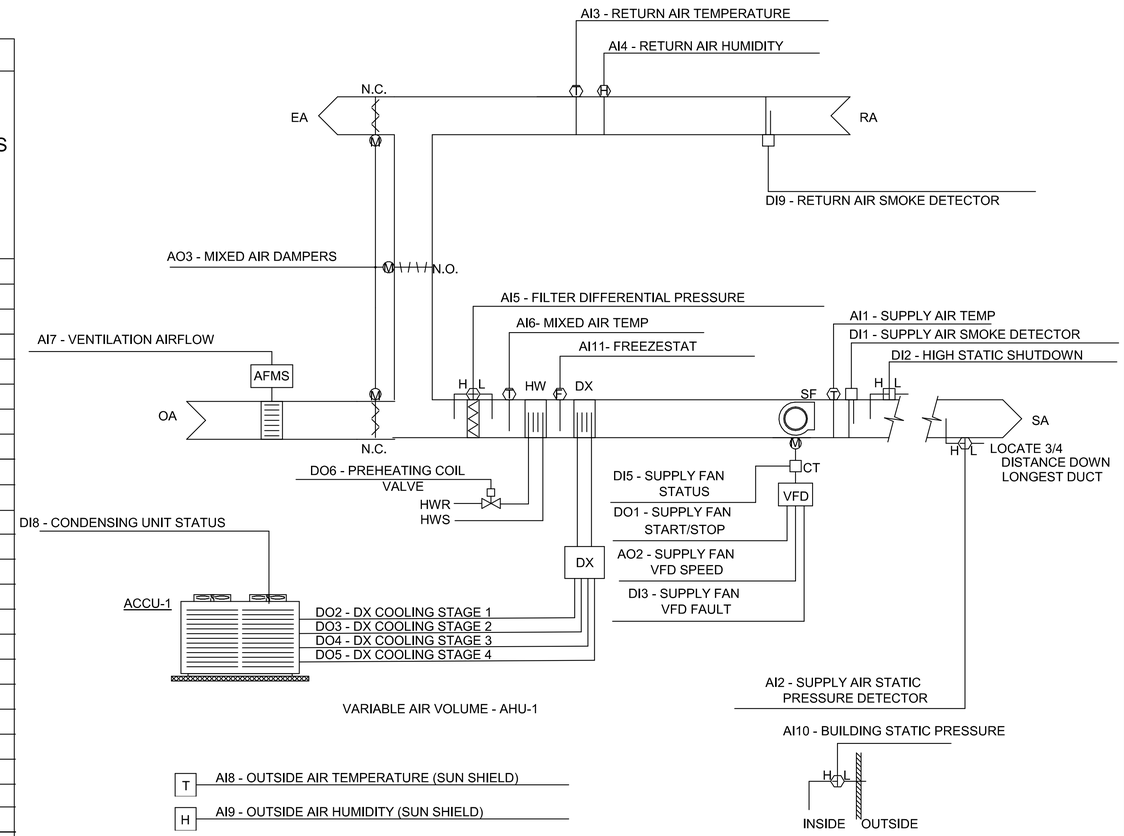

AIR HANDLER CONTROL DIAGRAM

NOT TO SCALE

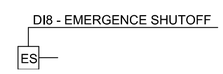

EMERGENCY SHUT-OFF DIAGRAM

NOT TO SCALE

SEQUENCE OF OPERATION

UPON ACTIVATION OF EMERNCY SHUT-OFF SWITCH, ALL OA AND EA DAMPERS SHALL CLOSE, ERU-1 AND ERU-2 AND AHU-1 SHALL BE DE-ENERGIZED.

BOWMAN FOSTER & ASSOCIATES, PC

DEPARTMENT OF THE NAVY — NAVAL FACILITIES ENGINEERING COMMAND	NAVAL FACILITIES ENGINEERING COMMAND — NAVAL STATION — NORFOLK, VIRGINIA	NORTH CAROLINA IPT	MCB CAMP LEJEUNE
JACKSONVILLE, NC	P-1475 CULTURAL ASSIMILATION FACILITY	MECHANICAL CONTROLS	
SCALE: GRAPHIC			
EFPROJECT NO.: 13-86-337			
CONSTR. CONTR. NO. N40085-10-D-5301			
NAVFAC DRAWING NO. 12711934			
SHEET 62 OF 81			
M-801			

APPR | DATE | DESCRIPTION | ITM

NAVFAC

NORTH CAROLINA REGISTERED PROFESSIONAL ENGINEER SEAL 20431 07-03-16 S.G. ROBERTS

HBA

A/E INFO

APPROVED

FOR COMMANDER NAVFAC

ACTIVITY

SATISFACTORY TO DATE

DES | KNC | DRW | LAW | CHK | MED

PM

BRANCH MANAGER

CHIEF ENG/ARCH

FIRE PROTECTION

DRAWFORM REVISION: 10 MAY 2014

UNCLASSIFIED//FOR OFFICIAL USE ONLY

SEQUENCE OF OPERATION (THIS SHEET ONLY)

VARIABLE AIR VOLUME - AHU (AHU-1)

OCCUPANCY SCHEDULE

0600-1800 MONDAY THROUGH FRIDAY (ADJ)

RUN CONDITIONS - REQUESTED:
THE UNIT SHALL RUN WHENEVER:
- ANY ZONE IS OCCUPIED.
- OR ANY THREE UNOCCUPIED ZONES NEED HEATING OR COOLING.

HIGH STATIC SHUTDOWN:
THE UNIT SHALL SHUT DOWN AND GENERATE AN ALARM UPON RECEIVING AN HIGH STATIC SHUTDOWN SIGNAL.

SUPPLY AIR SMOKE DETECTION:
THE UNIT SHALL SHUT DOWN AND GENERATE AN ALARM UPON RECEIVING A SUPPLY AIR SMOKE DETECTOR STATUS.

AHU OPTIMAL START:
THE UNIT SHALL START PRIOR TO SCHEDULED OCCUPANCY BASED ON THE TIME NECESSARY FOR THE ZONES TO REACH THEIR OCCUPIED SETPOINTS. THE START TIME SHALL AUTOMATICALLY ADJUST BASED ON CHANGES IN OUTSIDE AIR TEMPERATURE AND ZONE TEMPERATURES.

SUPPLY FAN:
THE SUPPLY FAN SHALL RUN ANYTIME THE UNIT IS COMMANDED TO RUN, UNLESS SHUTDOWN ON SAFETIES. TO PREVENT SHORT CYCLING, THE SUPPLY FAN SHALL HAVE A USER DEFINABLE (ADJ.) MINIMUM RUNTIME OF 10 MINUTES (ADJ).

ALARMS SHALL BE PROVIDED AS FOLLOWS:
- SUPPLY FAN FAILURE: COMMANDED ON, BUT THE STATUS IS OFF.
- SUPPLY FAN IN HAND: COMMANDED OFF, BUT THE STATUS IS ON.

SUPPLY AIR STATIC PRESSURE CONTROL:
THE SUPPLY AIR STATIC DETECTOR SHALL MEASURE DUCT STATIC PRESSURE (TYPICAL OF 2) . THE SUPPLY AIR STATIC PRESSURE SETPOINT SHALL RESET USING A TRIM AND RESPOND ALGORITHM BASED ON COOLING REQUIREMENTS. AS THE FACILITY'S VARIABLE AIR VOLUME TERMINAL UNIT PRIMARY VALVES OPEN BEYOND 90% OPEN (ADJ), THE STATIC PRESSURE SETPOINT, SHALL RESET TO A HIGHER VALUE (ADJ.). ONCE THE SPACE TEMPERATURES ARE SATISFIED (PRIMARY VALVES CLOSING) THEN THE SUPPLY AIR STATIC PRESSURE SETPOINT SHALL GRADUALLY LOWER TO REDUCE FAN ENERGY USE. THE SUPPLY FAN VFD SPEED SHALL NOT DROP BELOW 30% (ADJ.). DESIGN STATIC PRESSURE SHALL BE 1.5 IN. H20. ALARMS SHALL BE PROVIDED AS FOLLOWS:
- HIGH SUPPLY AIR STATIC PRESSURE: IF THE SUPPLY AIR STATIC PRESSURE IS 25% (ADJ.) GREATER THAN SETPOINT.
- SUPPLY FAN VFD FAULT.

BUILDING STATIC PRESSURE CONTROL:

THE CONTROLLER SHALL MEASURE THE BUILDING STATIC PRESSURE AND MODULATE THE EXHAUST AIR DAMPER TO MAINTAIN BUILDING STATIC PRESSURE SETPOINT OF POSITIVE 0.05 IN H2O (ADJ.). THE EXHAUST AIR DAMPER SHALL BE OPENED WHEN THE SUPPLY FAN STATUS IS PROVEN AND CLOSED WHEN THE SUPPLY FAN IS OFF.

ALARMS SHALL BE PROVIDED AS FOLLOWS:
- HIGH BUILDING STATIC PRESSURE: IF THE BUILDING STATIC PRESSURE IS 25% (ADJ.) GREATER THAN SETPOINT.
- LOW BUILDING STATIC PRESSURE: IF THE BUILDING STATIC PRESSURE IS 25% (ADJ.) LESS THAN SETPOINT.

SUPPLY AIR TEMPERATURE SETPOINT:
THE SUPPLY AIR TEMPERATURE SETPOINT SHALL RESET USING A TRIM AND RESPOND ALGORITHM BASED ON COOLING REQUIREMENTS. AS THE FACILITY'S VARIABLE AIR VOLUME TERMINAL UNIT PRIMARY VALVES OPEN BEYOND 90% OPEN (ADJ), THE SUPPLY AIR TEMPERATURE SETPOINT SHALL RESET TO A LOWER VALUE (ADJ.). AS THE SPACE TEMPERATURES ARE SATISFIED (PRIMARY VALVES CLOSING) THEN THE SUPPLY AIR TEMPERATURE SETPOINT SHALL GRADUALLY RISE TO REDUCE COMPRESSOR ENERGY USE. THE SUPPLY AIR TEMPERATURE SHALL NOT DROP BELOW 54 °F.

DX COOLING COIL VALVE:

THE CONTROLLER SHALL MEASURE THE SUPPLY AIR TEMPERATURE AND STAGE COMPRESSORS TO MAINTAIN ITS COOLING SETPOINT.

THE COOLING SHALL BE ENABLED WHENEVER:
- OUTSIDE AIR TEMPERATURE IS GREATER THAN 60°F (ADJ.).
- AND THE SUPPLY FAN STATUS IS ON.

DURING TESTING AND BALANCING, CONTROL COMPRESSOR STAGING BASED ON VFD SUPPLY FAN SPEED. COMPRESSOR STAGING WILL BE CONTROLLED TO MAINTAIN PROPER HEAD PRESSURE OF REFRIGERANT CIRCUITS. PROVIDE HOT GAS BYPASS FOR ADDITIONAL UNLOADING CAPACITY.

ALARMS SHALL BE PROVIDED AS FOLLOWS:
- LOW SUPPLY AIR TEMPERATURE ALARM: THE CONTROLLER SHALL ALARM IF THE SUPPLY AIR TEMPERATURE IS LESS THAN 45°F (ADJ.).

MINIMUM OUTSIDE AIR VENTILATION - AIRFLOW MEASURING STATION

OUTSIDE AIR DAMPERS SHALL MODULATE AND THE VENTILATION AIRFLOW MEASURING STATION SHALL MONITOR MINIMUM OUTSIDE AIRFLOW REQUIREMENTS AS INDICATED ON "AIR HANDLING UNIT SCHEDULE," SHEET M-601.

DURING UNOCCUPIED PERIODS, THE OUTSIDE AIR DAMPER SHALL BE CLOSED.

FILTER DIFFERENTIAL PRESSURE MONITOR:
THE CONTROLLER SHALL MONITOR THE DIFFERENTIAL PRESSURE ACROSS THE FILTER.
ALARMS SHALL BE PROVIDED AS FOLLOWS:
- FILTER CHANGE REQUIRED: FILTER DIFFERENTIAL PRESSURE EXCEEDS 0.8" (ADJ.).

MIXED AIR TEMPERATURE:
THE CONTROLLER SHALL MONITOR THE MIXED AIR TEMPERATURE AND USE AS REQUIRED FOR ECONOMIZER CONTROL.
ALARMS SHALL BE PROVIDED AS FOLLOWS:
- HIGH MIXED AIR TEMP: IF THE MIXED AIR TEMPERATURE IS GREATER THAN 90°F (ADJ.).
- LOW MIXED AIR TEMP: IF THE MIXED AIR TEMPERATURE IS LESS THAN 45°F (ADJ.).

RETURN AIR TEMPERATURE:
THE CONTROLLER SHALL MONITOR THE RETURN AIR TEMPERATURE AND USE AS REQUIRED FOR SETPOINT CONTROL OR ECONOMIZER CONTROL.
ALARMS SHALL BE PROVIDED AS FOLLOWS:
- HIGH RETURN AIR TEMP: IF THE RETURN AIR TEMPERATURE IS GREATER THAN 90°F (ADJ.).
- LOW RETURN AIR TEMP: IF THE RETURN AIR TEMPERATURE IS LESS THAN 45°F (ADJ.).

SUPPLY AIR TEMPERATURE:
THE CONTROLLER SHALL MONITOR THE SUPPLY AIR TEMPERATURE.
ALARMS SHALL BE PROVIDED AS FOLLOWS:
- HIGH SUPPLY AIR TEMP: IF THE SUPPLY AIR TEMPERATURE IS GREATER THAN 120°F (ADJ.).
- LOW SUPPLY AIR TEMP: IF THE SUPPLY AIR TEMPERATURE IS LESS THAN 45°F (ADJ.).

FREEZESTAT
THE CONTROLLER SHALL MONITOR THE FREEZESTAT TEMPERATURE.
ALARMS SHALL BE PROVIDED AS FOLLOWS:
- LOW FREEZESTAT TEMP: IF THE FREEZESTAT TEMPERATURE IS LESS THAN 38°F (ADJ.).

COMPRESSOR STAGING:
ACCU-1 COMPRESSORS SHALL STAGE TO MEET THE COOLING LOAD REQUIREMENTS OF THE BUILDING. AS COOLING LOAD INCREASES IN THE BUILDING COMPRESSORS SHALL BE INDEXED. AS COOLING LOAD DECREASES THE REVERSE SHALL OCCUR. AT LOADS BELOW THE CAPACITY OF THE LEAD COMPRESSOR, HOT GAS BYPASS SHALL BE ACTIVATED TO AVOID FREEZING THE EVAPORATOR. THE CONDENSING UNIT CONTROLLER SHALL AUTOMATICALLY MANAGE COMPRESSOR RUN TIME.

UNOCCUPIED MODE:
IN UNOCCUPIED MODE THE ERUs SHALL SHUT DOWN AND THE AHU SHALL MAINTAIN SETBACK TEMPERATURE (80 DEGREES F. COOLING, 64 DEGREES HEATING.

PREHEATING COIL VALVE:
THE CONTROLLER SHALL MEASURE THE SUPPLY AIR TEMPERATURE AND MODULATE THE TWO-WAY VALVE TO MAINTAIN THE LEAVING AIR TEMPERATURE

THE HEATING SHALL BE ENABLED WHENEVER:
- OUTSIDE AIR TEMPERATURE IS GREATER THAN 45°F (ADJ.).
- AND THE SUPPLY FAN STATUS IS ON.

BOWMAN FOSTER & ASSOCIATES, PC

NO.	DESCRIPTION	DATE	APPR

NAVFAC

NORTH CAROLINA REGISTERED PROFESSIONAL ENGINEER SEAL 20033 07-03-16 S.G. ROBERTS

HBA

A/E INFO

APPROVED
FOR COMMANDER NAVFAC
ACTIVITY
SATISFACTORY TO DATE
DES KNC | DRW LAW | CHK MED
PM
BRANCH MANAGER
CHIEF ENG/ARCH
FIRE PROTECTION

DEPARTMENT OF THE NAVY
NAVAL FACILITIES ENGINEERING COMMAND
NORTH CAROLINA IPT
NAVAL FACILITIES ENGINEERING COMMAND
NAVAL STATION – NORFOLK, VIRGINIA
MCB CAMP LEJEUNE
JACKSONVILLE, NC
P-1475 CULTURAL ASSIMILATION FACILITY
MECHANICAL CONTROLS

SCALE: GRAPHIC
EPROJECT NO.: 13-86-337
CONSTR. CONTR. NO. N40085-10-D-5301
NAVFAC DRAWING NO. 12711935
SHEET 63 OF 81

M-802

DRAWFORM REVISION: 10 MAY 2014

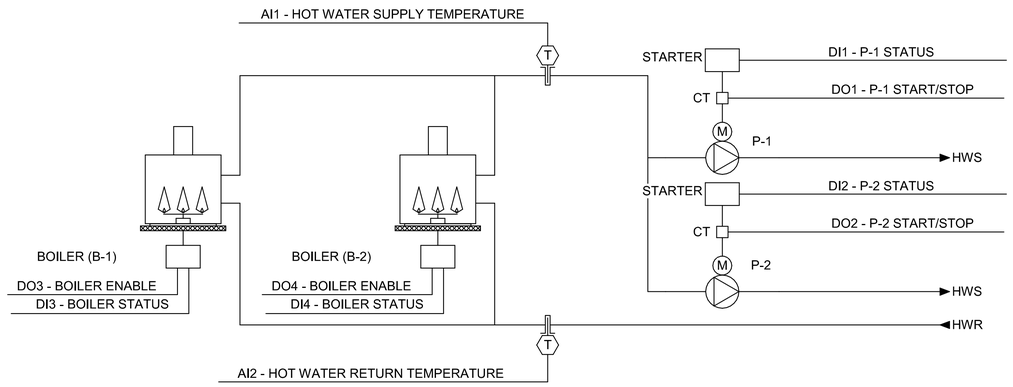

FPVAV TERMINAL UNITS (TYP OF 2)

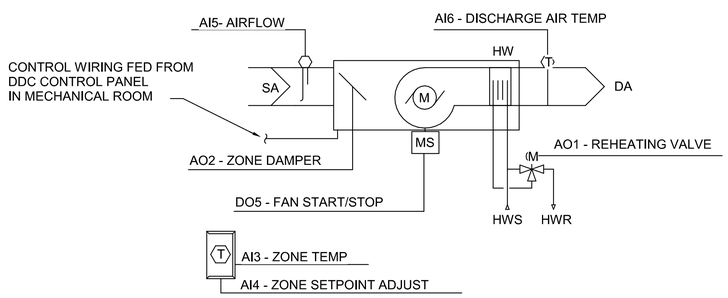

VAV TERMINAL UNITS (TYP OF 16)

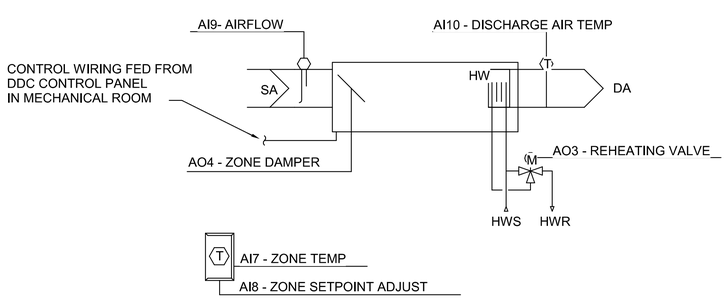

EXHAUST FAN/SUPPLY FAN

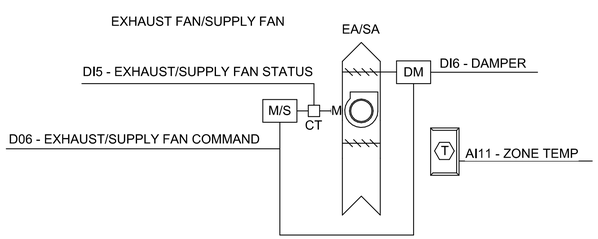

SYSTEM POINT LIST

SYSTEM POINT DESCRIPTION	DESIGNATION	ANALOG INPUT: GRAPHIC	TEMPERATURE	PRESSURE	RH	KW	GPM	CFM	PPM	PERCENT	PERCENT RLA	ANALOG OUTPUT: DDC	SETON ADJ.	POSITION	DIGITAL INPUT: PNEU. TRANSDUCER	STATUS ON/OFF	FILTER STATUS	STATUS OPEN/CLSD.	STATUS PRESSURE	STATUS	DIGITAL OUTPUT: OFF/ON	OPEN/CLOSE	LOCK OUT	ENABLE/DISABLE	ALARMS: HIGH ANALOG	LOW ANALOG	BINARY	PROOF	SENSOR FAIL	FLOW FAIL	COMM. FAIL	DIAGNOSTICS	PROGRAMS: TIME SCHEDULING	OPT. START/STOP	DEMAND LIMITING	RESET	EVENT PROGRAM	DDC	ALARM INSTRUCT	MAINT. WK. ORD.	RUN TIME	EXP. MESSAGE	SET BACK/SET UP	NIGHT PURGE	TENANT BILLING	RITUALIZING	TIMED OVERRIDE		NOTES
EQUIPMENT/CONDITION GAS BOILER																																																		
HOT WATER SUPPLY TEMP.	AI1	x	x																						x	x		x									x													
HOT WATER RETURN TEMP.	AI2	x	x																						x	x		x									x													
P-1 STATUS	DI1	x																		x																	x													
P- 2 STATUS	DI2	x																		x																	x													
B-1 STATUS	DI3	x																		x																	x													
B-2 STATUS	DI4	x																		x																	x													
P-1 START/STOP	DO1	x																				x															x													
P-2 START/STOP	DO2	x																				x															x													
B-1 ENABLE	DO3																					x															x													
B-2 ENABLE	DO4																					x															x													
EQUIPMENT/CONDITION FPVAV TERMINAL BOXES																																																		
ZONE TEMP.	AI3	x	x																						x	x		x									x													
ZONE SETPOINT ADJUST	AI4	x	x																						x	x		x									x													
AIRFLOW	AI5	x						x																	x	x		x									x													
DISCHARGE AIR TEMP.	AI6	x	x																						x	x		x									x													
REHEATING VALVE	AO1	x										x		x																							x													
ZONE DAMPER	AO2	x										x		x																							x													
FAN START/STOP	DO5	x																				x															x													
EQUIPMENT/CONDITION VAV TERMINAL BOXES																																																		
ZONE TEMP.	AI7	x	x																						x	x		x									x													
ZONE SETPOINT ADJUST	AI8	x	x																						x	x		x									x													
AIRFLOW	A19	x						x																	x	x		x									x													
DISCHARGE AIR TEMP.	AI10	x	x																						x	x		x									x													
REHEATING VALVE	AO3	x										x		x																							x													
ZONE DAMPER	AO4	x										x		x																							x													
																																					x													
EQUIPMENT/CONDITION EXHAUST/SUPPLY FAN																																																		
ZONE TEMP.	AI11	x	x																						x	x		x									x													
FAN START/STOP	DO6	x																				x															x													
FAN STATUS	DI5	x																				x		x	x	x		x									x													
DAMPER	DI6	x																					x					x																						

NAVFAC

HBA

A/E INFO

APPROVED

FOR COMMANDER NAVFAC

ACTIVITY

SATISFACTORY TO DATE

DES KNC | DRW LAW | CHK MED

PM

BRANCH MANAGER

CHIEF ENG/ARCH

FIRE PROTECTION

DEPARTMENT OF THE NAVY
NAVAL FACILITIES ENGINEERING COMMAND
NAVAL FACILITIES ENGINEERING COMMAND
NAVAL STATION – NORFOLK, VIRGINIA
NORTH CAROLINA IPT
MCB CAMP LEJEUNE
JACKSONVILLE, NC
P-1475 CULTURAL ASSIMILATION FACILITY
MECHANICAL CONTROLS

SCALE: GRAPHIC
EPROJECT NO.: 13-86-337
CONSTR. CONTR. NO. N40085-10-D-5301
NAVFAC DRAWING NO. 12711936
SHEET 64 OF 81

M-803

BOWMAN FOSTER & ASSOCIATES, PC

DRAWFORM REVISION: 10 MAY 2014

SEQUENCE OF OPERATION

VARIABLE AIR VOLUME - TERMINAL UNITS (TYPICAL OF 18)

RUN CONDITIONS - CONTINUOUS:

THE UNIT SHALL RUN CONTINUOUSLY AND SHALL MAINTAIN:
- A 78°F (ADJ.) COOLING SETPOINT
- A 70°F (ADJ.) HEATING SETPOINT.

ALARMS SHALL BE PROVIDED AS FOLLOWS:
- HIGH ZONE TEMP: IF THE ZONE TEMPERATURE IS GREATER THAN 3° F (ADJ) THE COOLING SETPOINT BY A USER DEFINABLE AMOUNT (ADJ.).
- LOW ZONE TEMP: IF THE ZONE TEMPERATURE IS LESS THAN 3° F (ADJ) THE HEATING SETPOINT BY A USER DEFINABLE AMOUNT (ADJ.),

ZONE SETPOINT ADJUST:

THE OCCUPANT SHALL BE ABLE TO ADJUST THE ZONE TEMPERATURE HEATING AND COOLING SETPOINTS AT THE ZONE SENSOR. RANGE OF ADJUSTMENT SHALL BE AS FOLLOWS:

COOLING SETPOINT RANGE 72-78 °F(ADJ)
HEATING SETPOINT RANGE 68-72 °F (ADJ)

FAN-POWERED VARIABLE VOLUME TERMINAL UNIT - FLOW CONTROL:

THE UNIT SHALL MAINTAIN ZONE SETPOINTS BY CONTROLLING THE AIRFLOW THROUGH ONE OF THE FOLLOWING:
OCCUPIED:
- WHEN ZONE TEMPERATURE IS GREATER THAN ITS COOLING SETPOINT, THE ZONE DAMPER SHALL MODULATE BETWEEN THE MINIMUM OCCUPIED AIRFLOW (ADJ.) AND THE MAXIMUM COOLING AIRFLOW (ADJ.) UNTIL THE ZONE IS SATISFIED.
- WHEN THE ZONE TEMPERATURE IS BETWEEN THE COOLING SETPOINT AND THE HEATING SETPOINT, THE ZONE DAMPER SHALL MAINTAIN THE MINIMUM SCHEDULED VALUES.
- WHEN ZONE TEMPERATURE IS LESS THAN ITS HEATING SETPOINT, THE CONTROLLER SHALL ENERGIZE THE FAN AND ENABLE HEATING AT THE HEATING AIRFLOW TO MAINTAIN THE ZONE TEMPERATURE AT ITS HEATING SETPOINT. THE CONTROLLER SHALL MEASURE THE ZONE TEMPERATURE AND MODULATE THE REHEATING COIL VALVE OPEN ON DROPPING TEMPERATURE TO MAINTAIN ITS HEATING SETPOINT.

UNOCCUPIED:
- WHEN THE ZONE IS UNOCCUPIED THE ZONE DAMPER SHALL CONTROL TO ITS MINIMUM UNOCCUPIED AIRFLOW (ADJ.).
- UNOCCUPIED COOLING SETPOINT - 80 °F (ADJ). SEQUENCE OF OPERATION WILL BE THE SAME AS OCCUPIED.
- UNOCCUPIED HEATING SETPOINT - 65 °F (ADJ). SEQUENCE OF OPERATION WILL BE THE SAME AS OCCUPIED.

3-WAY MODULATING REHEATING COIL VALVE:

THE CONTROLLER SHALL MEASURE THE ZONE TEMPERATURE AND MODULATE THE REHEATING COIL VALVE OPEN ON DROPPING TEMPERATURE TO MAINTAIN ITS HEATING SETPOINT.

VARIABLE VOLUME TERMINAL UNIT - FLOW CONTROL:

THE UNIT SHALL MAINTAIN ZONE SETPOINTS BY CONTROLLING THE AIRFLOW THROUGH ONE OF THE FOLLOWING:
OCCUPIED:ED
- WHEN ZONE TEMPERATURE IS GREATER THAN ITS COOLING SETPOINT, THE ZONE DAMPER SHALL MODULATE BETWEEN THE MINIMUM OCCUPIED AIRFLOW (ADJ.) AND THE MAXIMUM COOLING AIRFLOW (ADJ.) UNTIL THE ZONE IS SATISFIED.
- WHEN THE ZONE TEMPERATURE IS BETWEEN THE COOLING SETPOINT AND THE HEATING SETPOINT, THE ZONE DAMPER SHALL MAINTAIN THE MINIMUM SCHEDULED VALUES.
- WHEN ZONE TEMPERATURE IS LESS THAN ITS HEATING SETPOINT, THE CONTROLLER SHALL ENABLE HEATING AT THE HEATING AIRFLOW TO MAINTAIN THE ZONE TEMPERATURE AT ITS HEATING SETPOINT. THE CONTROLLER SHALL MEASURE THE ZONE TEMPERATURE AND MODULATE THE REHEATING COIL VALVE OPEN ON DROPPING TEMPERATURE TO MAINTAIN ITS HEATING SETPOINT.

UNOCCUPIED:
- WHEN THE ZONE IS UNOCCUPIED THE ZONE DAMPER SHALL CONTROL TO ITS MINIMUM UNOCCUPIED AIRFLOW (ADJ.).
- UNOCCUPIED COOLING SETPOINT - 80 °F (ADJ). SEQUENCE OF OPERATION WILL BE THE SAME AS OCCUPIED.
- UNOCCUPIED HEATING SETPOINT - 65 °F (ADJ). SEQUENCE OF OPERATION WILL BE THE SAME AS OCCUPIED.

3-WAY MODULATING REHEATING COIL VALVE:

THE CONTROLLER SHALL MEASURE THE ZONE TEMPERATURE AND MODULATE THE REHEATING COIL VALVE OPEN ON DROPPING TEMPERATURE TO MAINTAIN ITS HEATING SETPOINT.

GAS FIRED BOILERS (B-1, B-2)

THE BOILER SYSTEM SHALL BE ENABLED TO RUN WHENEVER OUTSIDE AIR TEMPERATURE IS LESS THAN 65° F (ADJ) AND BUILDING IS OCCUPIED. IF BUILDING IS UNOCCUPIED AND THREE HOT WATER COILS NEED HEATING (ADJ) THE BOILER SHALL BE ENABLED. TO PREVENT SHORT CYCLING, THE BOILER SYSTEM SHALL RUN FOR AND BE OFF FOR THE MINIMUM ADJUSTABLE TIMES (BOTH USER DEFINABLE), UNLESS SHUTDOWN ON SAFETIES OR OUTSIDE AIR CONDITIONS. THE BOILERS SHALL RUN SUBJECT TO ITS OWN INTERNAL SAFETIES AND CONTROLS.

HOT WATER SUPPLY TEMPERATURE

HOT WATER SUPPLY TEMPERATURE SETPOINT RESET:
THE HOT WATER SUPPLY TEMPERATURE SETPOINT SHALL RESET USING A TRIM AND RESPOND ALGORITHM BASED ON HEATING REQUIREMENTS. AS THE FACILITY'S HOT WATER VALVES OPEN BEYOND 90% OPEN (ADJ), THE SETPOINT SHALL RESET TO A HIGHER VALUE (ADJ.). ONCE THE HOT WATER COILS ARE SATISFIED (VALVES CLOSING) THEN THE SETPOINT SHALL GRADUALLY LOWER TO REDUCE HEATING ENERGY USE. DESIGN HOT WATER TEMPERATURE SHALL BE 160°F

PRIMARY HOT WATER TEMPERATURE MONITORING:
HIGH PRIMARY HOT WATER SUPPLY TEMPERATURE ALARM SHALL BE GREATER THAN 200° F (ADJ). LOW PRIMARY HOT WATER SUPPLY TEMPERATURE ALARM SHALL BE 100°F (ADJ).

HOT WATER PUMP (P-1,\AND P-2)

THE PUMP SHALL ENERGIZE WHENEVER EITHER B-1 OR B-2 BOILER IS ENABLED.

EXHAUST FAN THE EXHAUST FAN SHALL OPERATE WHEN ROOM TEMPERATURE IS GREATER THAN 75°F. (ADJ). MOTORIZED DAMPER SHALL BE ENERGIZED. ON FALL IN TEMPERTAURE THE OPPOSIRE SHALL OCCUR.

SUPPLY FAN SUPPLY FAN SHALL BE INTERLOCKED WITH BOILER OPERATION. PRIOR TO . ENERGIZING THE MOTORIZED DAMPER SHALL OPEN AND THE SUPPLY FAN SHALL BE ENERGIZED. SUPPLY FAN SHALL ALSO RUN WHEN ROOM TEMPERATURES GREATER THAN 75°F. (ADJ.), THE MOTORIZED DAMPER SHALL OPEN AND FAN SHALL BE ENERGIZED.

NO.	DESCRIPTION	DATE	APPR

NAVFAC

SEAL

HBA

A/E INFO

APPROVED

FOR COMMANDER NAVFAC

ACTIVITY

SATISFACTORY TO DATE

DES	KNC	DRW	LAW	CHK	MED

PM

BRANCH MANAGER

CHIEF ENG/ARCH

FIRE PROTECTION

DEPARTMENT OF THE NAVY
NAVAL FACILITIES ENGINEERING COMMAND
NORTH CAROLINA IPT

NAVAL FACILITIES ENGINEERING COMMAND
NAVAL STATION – NORFOLK, VIRGINIA

MCB CAMP LEJEUNE
JACKSONVILLE, NC

P-1475 CULTURAL ASSIMILATION FACILITY

MECHANICAL CONTROLS

BOWMAN FOSTER & ASSOCIATES, P.C.

SCALE:	GRAPHIC
EPROJECT NO.:	13-86-337
CONSTR. CONTR. NO.	N40085-10-D-5301
NAVFAC DRAWING NO.	12711937
SHEET	65 OF 81

M-804

DRAWFORM REVISION: 10 MAY 2014

ERV-1 AND ERV-2 CONTROL DIAGRAM

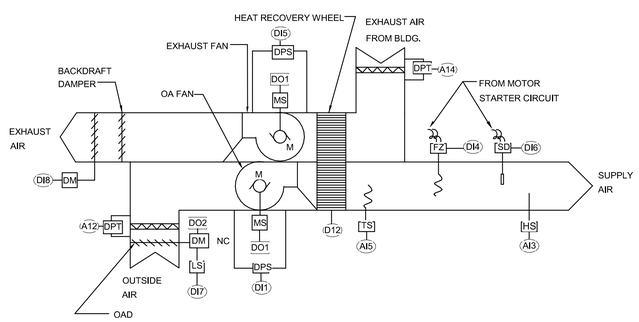

SEQUENCE OF OPERATION

1. OCCUPANCY
   ERV-1 AND ERV-2 SHALL BE IN OCCUPIED MODE AS SCHEDULED AND SHALL OTHERWISE BE IN UNOCCUPIED MODE. EA AND OA DAMPERS SHALL OPEN PRIOR TO FAN ENERGIZING.

2. START/STOP:
   OPEN DAMPER OAD, AND ENERGIZE THE SUPPLY, EXHAUST FANS AND ENTHALPY WHEEL WHEN ERV IS IN OCCUPIED MOD.

3. SAFETIES AND ALARMS:
   UNIT SHALL BE DE-ENERGIZED AND ALL DAMPERS SHALL BE CLOSED BY BUILDING FA SYSTEM.

4. UNOCCUPIED MODE:
   ERV SHALL BE DE-ENERGIZED IN UNOCCUPIED MODE. EA AND OA DAMPER SHALL CLOSE.

SYSTEM POINT LIST

SYSTEM POINT DESCRIPTION / EQUIPMENT/CONDITION ENERGY RECOVERY UNIT	DESIGNATION	GRAPHIC	ANALOG INPUT: TEMPERATURE	PRESSURE	RH	KW	GPM	CFM	PPM	PERCENT	PERCENT RLA	ANALOG OUTPUT: DDC	SETON ADJ.	POSITION	DIGITAL INPUT: PNEU. TRANSDUCER	STATUS ON/OFF	FILTER STATUS	STATUS OPEN/CLSD.	STATUS PRESSURE	STATUS	DIGITAL OUTPUT: OFF/ON	OPEN/CLOSE	LOCK OUT	ENABLE/DISABLE	SYSTEMS FEATURES ALARMS: HIGH ANALOG	LOW ANALOG	BINARY	PROOF	SENSOR FAIL	FLOW FAIL	COMM. FAIL	DIAGNOSTICS	PROGRAMS: TIME SCHEDULING	OPT. START/STOP	DEMAND LIMITING	RESET	EVENT PROGRAM	DDC	ALARM INSTRUCT	MAINT. WK. ORD.	RUN TIME	EXP. MESSAGE	SET BACK/SET UP	NIGHT PURGE	TENANT BILLING	RITUALIZING	TIMED OVERRIDE	NOTES
SA TEMP	AI1	X	X																											X																				
DIRTY FILTER	AI2	X		X																					X				X																				
SA RELATIVE HUMIDITY	AI3	X			X																								X																				
DIRTY FILTER	AI4	X		X																					X																								
RECOVERY TEMP	AI5	X	X																										X																				
OA FAN STATUS	DI1	X														X																																	
WHEEL ROTATION STATUS	DI2	X														X																																	
FREEZESTAT	DI4	X																							X				X																				
EXHAUST FAN STATUS	DI5	X														X																																	
SMOKE DETECTOR	DI6	X																							X				X																				
OA DAMPER CLOSED	DI7	X																X															X																
EX DAMPER CLOSED	DI8	X																X															X																
EX & OA FAN START	D01	X																			X												X																
OAD OPEN	D02	X																				X																											

NO.	DESCRIPTION	DATE	APPR.

NAVFAC

SEAL

HBA

A/E INFO

APPROVED

FOR COMMANDER NAVFAC

ACTIVITY

SATISFACTORY TO DATE

DES	KNC	DRW	LAW	CHK	MED

PM

BRANCH MANAGER

CHIEF ENG/ARCH

FIRE PROTECTION

DEPARTMENT OF THE NAVY
NAVAL FACILITIES ENGINEERING COMMAND
NAVAL FACILITIES ENGINEERING COMMAND
NAVAL STATION – NORFOLK, VIRGINIA
NORTH CAROLINA IPT
MCB CAMP LEJEUNE
JACKSONVILLE, NC
P-1475 CULTURAL ASSIMILATION FACILITY
MECHANICAL CONTROLS

SCALE: GRAPHIC
EPROJECT NO.: 13-86-337
CONSTR. CONTR. NO. N40085-10-D-5301
NAVFAC DRAWING NO. 12711938
SHEET 66 OF 81
M-805

BOWMAN FOSTER & ASSOCIATES, PC

DRAWFORM REVISION: 10 MAY 2014

LEGEND

- A — LIGHTING FIXTURE TYPE SYMBOL. SEE "LIGHTING FIXTURE SCHEDULE" ON SHEET E-101.
- 1 — CONSTRUCTION NOTE SYMBOL.
- 1 — LIGHTING FIXTURE AND/OR PANELBOARD, SWITCHBOARD SCHEDULE NOTE SYMBOL.
- LED LIGHTING FIXTURE.
- LED EMERGENCY LIGHTING FIXTURE.
- H — COMPACT FLUORESCENT WALL MOUNTED LIGHTING FIXTURE.
- EXIT LIGHTING FIXTURE. ARROW, WHEN USED INDICATES DIRECTION (SHADING INDICATES FACE OF SIGN ORIENTATION).
- EMERGENCY BATTERY UNIT.
- DUPLEX CONVENIENCE RECEPTACLE. 20A, 125VAC, NEMA5-20R, FLUSH MOUNT 18" AFF UON.
- DOUBLE DUPLEX CONVENIENCE RECEPTACLE. (2)20A, 125VAC, NEMA 5-20R, FLUSH MOUNT 18" AFF UON.
- GFI — DUPLEX CONVENIENCE RECEPTACLE WITH INTERNAL GROUND FAULT PROTECTION. 20A, 125VAC, NEMA 5-20R, FLUSH MOUNT 18" AFF UON.
- DUPLEX CONVENIENCE RECEPTACLE. 20A, 125VAC, NEMA 5-20R, SURFACE MOUNT 18" AFF UON.
- DOUBLE DUPLEX CONVENIENCE RECEPTACLE. (2)20A, 125VAC, NEMA 5-20R, SURFACE MOUNT 18" AFF UON.
- WP — DUPLEX WEATHERPROOF GFI CONVENIENCE RECEPTACLE. 20A, 125VAC, NEMA 5-20R, SURFACE MOUNT HORIZONTALLY 18" AFF IN CAST BOX UON.
- S — SINGLE POLE SWITCH. 20A, 120/277V, FLUSH MOUNT 48" AFF UON.
- S3 — THREE-WAY SWITCH. 20A, 120/277V, FLUSH MOUNT 48" AFF UON.
- SO — OCCUPANCY SENSOR DUAL TECHNOLOGY SWITCH. FLUSH MOUNT 48" AFF UON.
- SO — DIMMER SWITCH. FLUSH MOUNT 48" AFF UON.
- SO — OCCUPANCY SENSOR DUAL TECHNOLOGY SWITCH. SURFACE MOUNTM 48" AFF UON.
- O — DUAL TECHNOLOGY OCCUPANCY SENSOR. CEILING MOUNTED.
- SM — MOTOR RATED SWITCH WITH OVERLOADS. SURFACE MOUNT 48" AFF UON.
- E — EQUIPMENT CONNECTION AS NOTED.
- W — WATER HEATER CONNECTION AS NOTED.
- F — EXHAUST FAN CONNECTION (FRACTIONAL HP, 120 OR 277V).
- J — JUNCTION BOX (JB) RECESSED MOUNTED 6"SQ x DEPTH REQUIRED UON.
- M 5 — MOTOR CONNECTION, HP AS INDICATED.
- 3P 60/40 — DISCONNECT SWITCH. 240 OR 600V IN NEMA 1 ENCLOSURE UON. 3P = NO. OF POLES, 60 = SWITCH RATING, 40 = FUSE RATING (NF INDICATES NON-FUSIBLE).
- ELECTRICAL PANELBOARD (208Y/120V).
- ELECTRICAL PANELBOARD (480Y/277V).
- BRANCH CIRCUIT OR FEEDER WIRING IN CONDUIT. NO TICK MARKS INDICATE TWO #12 CONDUCTORS AND ONE #12 GND IN 1/2"C UON. TICK MARKS, WHEN SHOWN, INDICATE NO. OF #12 CONDUCTORS IF OTHER THAN THREE; (⏚) INDICATES GND. CONDUIT LARGER THAN 1/2" AND WIRE LARGER THAN #12 SHALL BE AS INDICATED.
- LA-1,3 — HOMERUNS TO PANEL. PANEL AND CIRCUIT DESIGNATIONS AS INDICATED. CIRCUIT DESIGNATION SHALL APPLY CIRCUIT TO LOAD.
- INDICATES A CONDUIT RUN CONCEALED IN CEILING, WALL, FLOOR OR ABOVE SUSPENDED CEILING.
- 4 — COMBINATION WALL TELEPHONE/DATA-BOX. FLUSH MOUNT 18" AFF UON. THE SUBSCRIPT INDICATES THE NUMBER OF CONNECTION PORTS. NO SUBSCRIPT INDICATES ONLY TWO CONNECTION PORTS.
- OS — DUAL TECHNOLOGY OCCUPANCY SENSOR
- TV — TELEVISION SYSTEM OUTLET. MOUNT 18" AFF UON.
- T — DRY TYPE TRANSFORMER. KVA AS INDICATED (480V-208Y/120V).
- GROUND TEST WELL.
- BMS — ROUGH-IN BOX FOR BALANCED MAGNETIC SWITCH.
- CR — ROUGH-IN BOX FOR CARD READER WITHOUT KEY PAD.
- EXISTING POWER POLE (HEIGHT AND CLASS AS INDICATED).
- POLE MOUNTED TRANSFORMER (SINGLE PHASE WITH KVA AS INDICATED).
- EXISTING AREA/STREET LIGHTING POLE WITH EXISTING LUMINAIRE.
- TELECOMMUNICATION TRAFFIC RATED MANHOLE.
- UP — UNDERGROUND PRIMARY CONDUIT, CONCRETE ENCASED UON.
- UT — UNDERGROUND TELEPHONE CONDUIT, CONCRETE ENCASED UON.
- US — UNDERGROUND SECONDARY CONDUIT, CONCRETE ENCASED UON.

ABBREVIATIONS

PH	PHASE
A, AMP	AMPERE
AFF	ABOVE FINISHED FLOOR
AFG	ABOVE FINISHED GRADE
AHU	AIR HANDLING UNIT
BLDG	BUILDING
C	CONDUIT
ELEC	ELECTRIC
EF	EXHAUST FAN
EQUIP	EQUIPMENT
EWC	ELECTRIC WATER COOLER
EWH	ELECTRIC WATER HEATER
EXH	EXHAUST
EXIST	EXISTING
F	FUSE
FACP	FIRE ALARM CONTROL PANEL
FCU	FAN COIL UNIT
FLR	FLOOR
GFI	GROUND FAULT INTERRUPTER
GND	GROUND
HP	HORSE POWER
KVA	KILOVOLT AMPERES
KW	KILOWATT
MAX	MAXIMUM
MH	MANHOLE
MIN	MINIMUM
MLO	MAIN LUGS ONLY
MCB	MAIN CIRCUIT BREAKER
NF	NONFUSIBLE
P	POLE
PNL	PANELBOARD
RECPT	RECEPTACLE
TYP	TYPICAL
UON	UNLESS OTHERWISE NOTED
V	VOLT, VOLTAGE
VAC	VOLTS ALTERNATING CURRENT
W	WIRE
WP	WEATHERPROOF
XFMR	TRANSFORMER

NUM	DESCRIPTION	DATE	APPR

NAVFAC

SEAL

A/E INFO

APPROVED

FOR COMMANDER NAVFAC

ACTIVITY

SATISFACTORY TO DATE

DES IEP | DRW RD | CHK MCD

PM

BRANCH MANAGER

CHIEF ENG/ARCH

FIRE PROTECTION

DEPARTMENT OF THE NAVY
NAVAL FACILITIES ENGINEERING COMMAND
NAVAL FACILITIES ENGINEERING COMMAND – NORFOLK, VIRGINIA
NAVAL STATION – JACKSONVILLE, NC
NORTH CAROLINA IPT
MCB CAMP LEJEUNE

P-1475 CULTURAL ASSIMILATION FACILITY

ELECTRICAL LEGEND, NOTES AND ABBREVIATIONS

SCALE: GRAPHIC
EPROJECT NO.: 13-86-6337
CONSTR. CONTR. NO. N40085-10-D-5301
NAVFAC DRAWING NO. 12711939
SHEET 67 OF 81

E-001

BOWMAN FOSTER & ASSOCIATES, PC

DRAWFORM REVISION: 10 MAY 2014

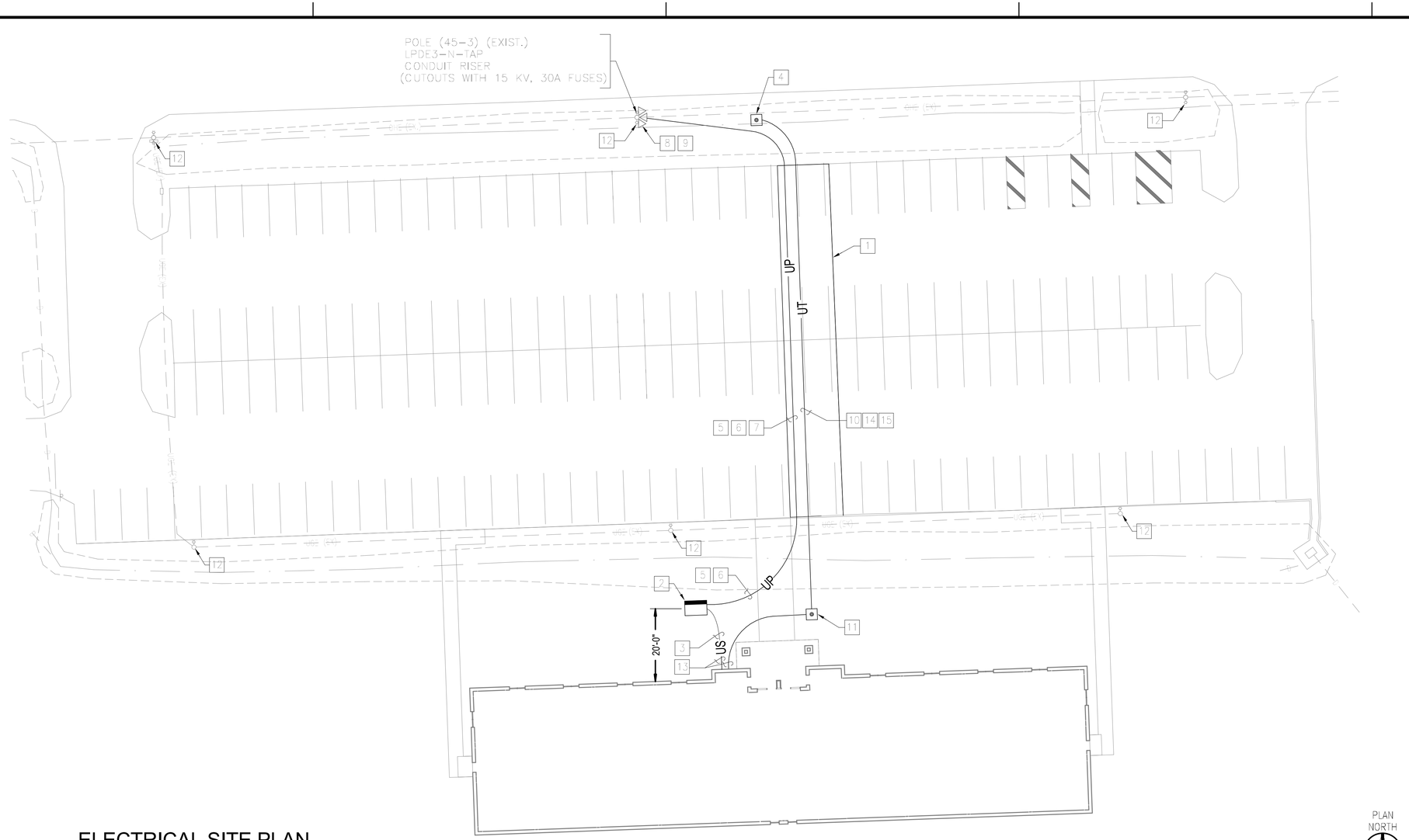

ELECTRICAL SITE PLAN

1" = 20'-0"

GENERAL NOTE:

1. ALL DUCTBANK SHALL BE A MINIMUM OF 3'-6" BELOW FINISHED GRADE.

WORK NOTES:

1. CUT AND PATCH EXISTING ASPHALT PARKING FOR INSTALLATION OF DUCTBANK. CONTRACTOR TO MATCH EXISTING SURFACE. COORDINATE WITH CIVIL DRAWINGS.
2. PROVIDE 225KVA PAD MOUNTED TRANSFORMER. 12,470 - 208Y/120V, 3 PHASE. SEE DETAIL SHEET E-503 FOR MORE INFORMATION.
3. PROVIDE THREE 4" PVC CONDUITS CONCRETE ENCASED. TWO WITH FOUR #350 KCMIL AND ONE #1 GND AND ONE WITH PULL STRING FOR SPARE.
4. PROVIDE MANHOLE TYPE 4. SEE SHEET E-504 FOR "STANDARD ELECTRICAL MANHOLE (TRAFFIC) TYPE 3 & 4.
5. PROVIDE TWO 4" PVC CONDUITS CONCRETE ENCASED. ONE WITH FOUR #2, 15KV, EPR, 133% AND ONE WITH PULL STRING FOR SPARE.
6. SEE "DUCTBANK DETAIL" SHEET E-501 OR MORE INFORMATION.
7. COORDINATE CONDUIT ROUTING WITH OTHER UTILITIES IN SAME PATH IN THE FIELD. SEE CIVIL DRAWINGS
8. EXISTING 45-3 POWER POLE WITH THREE EXISTING 50 KVA POLE MOUNTED TRANSFORMERS.
9. SEE POLE DETAILS ON SHEETS E-501 THRU E-503 FOR MORE INFORMATION.
10. PROVIDE THREE 4" CONDUITS CONCRETE ENCASED FOR TELECOMMUNICATIONS DUCTBANK.
11. PROVIDE HANDHOLE TYPE 4. SEE SHEET E-504 FOR "STANDARD ELECTRICAL HANDHOLE (TRAFFIC/AIRFIELD) TYPE 3 & 4.
12. EXISTING SITE LIGHTING TO REMAIN.
13. ROUTE DUCTBANKS BETWEEN COLUMN FOOTINGS. COORDINATE WITH STRUCTURAL DRAWINGS.
14. PROVIDE A 50 PAIR UTP RUS PE-39 COPPER CABLE. TERMINATE ON TELEPHONE BACKBOARD IN TELECOM ROOM 103. CONTRACTOR SHOULD INSTALL NEW PATHWAY AND CABLES PER SECTIONS 27 10 00 AND 33 82 00 THEN COORDINATE WITH G-6 MCI EAST MCB CAMELJ.
15. PROVIDE A 24 STRAND SINGLE MODE SHEILDED FIBER OPTIC CABLE. TERMINATE ON TELEOM RACK IN TELECOM ROOM 103. CONTRACTOR SHOULD INSTALL NEW PATHWAY AND CABLES PER SECTIONS 27 10 00 AND 33 82 00 THEN COORDINATE WITH G-6 MCI EAST MCB CAMELJ.

BOWMAN FOSTER & ASSOCIATES, PC

SCALE: 1" = 20'-0" 0 10' 20' 40'

NUM	DESCRIPTION	DATE	APPR

NAVFAC

SEAL

HBA

A/E INFO

APPROVED

FOR COMMANDER NAVFAC

ACTIVITY

SATISFACTORY TO DATE

DES	IEP	DRW	RD	CHK	MED

PM

BRANCH MANAGER

CHIEF ENG/ARCH

FIRE PROTECTION

DEPARTMENT OF THE NAVY
NAVAL FACILITIES ENGINEERING COMMAND
NAVAL FACILITIES ENGINEERING COMMAND
NAVAL STATION – NORFOLK, VIRGINIA
NORTH CAROLINA IPT
MCB CAMP LEJEUNE
JACKSONVILLE, NC

P-1475 CULTURAL ASSIMILATION FACILITY

ELECTRICAL SITE PLAN

SCALE: GRAPHIC
EPROJECT NO.: 13-86-6337
CONSTR. CONTR. NO. N40085-10-D-5301
NAVFAC DRAWING NO. 12711940
SHEET 68 OF 81

ES101

DRAWFORM REVISION: 10 MAY 2014

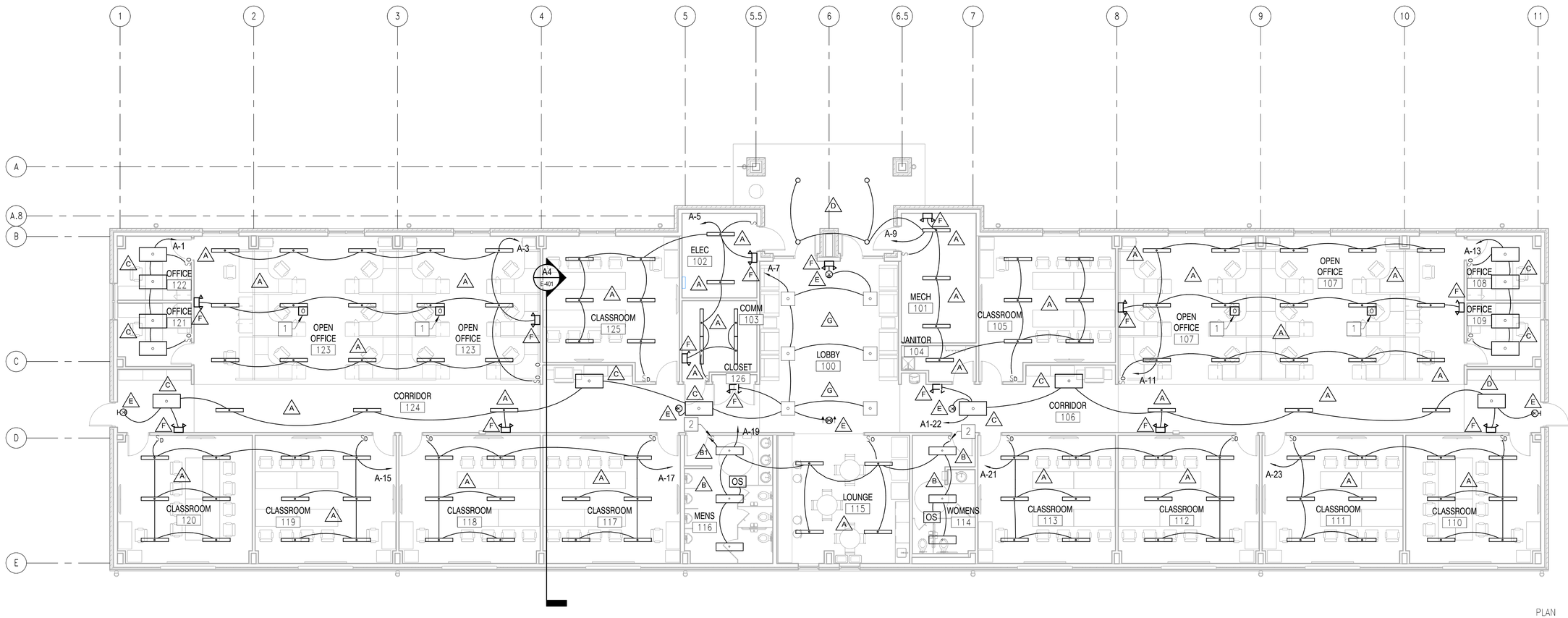

LIGHTING FLOOR PLAN

1/8" = 1'-0"

GENERAL NOTES:

1. RUN ALL CONDUITS FOR LIGHTING CIRCUITS TO THE UNDERSIDE OF ROOF STRUCTURE AS HIGH AS POSSIBLE.
2. ALL CONDUITS, WHIPS AND PENDANTS FOR LIGHTING SHALL BE PAINTED BLACK.
3. SEE "LIGHTING FIXTURE MOUNTING SECTION", ON SHEET E-401 FOR MOUNTING REQUIRMENTS.
4. COORDINATE MOUNTING OF ALL AIRCRAFT CABLE SUPPORTED LIGHTING FIXTURES WITH THE LOCATIONS OF THE ROOF PURLINS.

WORK NOTES:

1 FIXTURES MOUNTED OCCUPANCY SENSOR.

2 MOUNT DEVICE 48" ABOVE FINISHED FLOOR TO TOP OF OUTLET BOX.

LIGHTING FIXTURE SCHEDULE

FIXTURE SYMBOL	LAMPS (NO. & TYPE)	VOLTAGE	WATTAGE	MOUNTING	NOTES (SEE BELOW)
A	LED	120	38W	PENDANT/CABLE MOUNT 12'-0" AFF	REFER TO SHEET E-401 FOR "LIGHTING FIXTURE MOUNTING SECTION".
B	LED	120	38W	RECESSED	
C	LED	120	46W	RECESSED	
D	LED	120	61W	RECESSED	
E	LED	120	-	SURFACE	NUMBER OF FACES AS INDICATED
F	(2) 5W MR16	120	10W	SURFACE	1
G	LED	120	36W	RECESSED	

NOTE:
1 MOUNT LIGHTING FIXTURE 9'-0" TO BOTTOM OF FIXTURE ABOVE FINISHED FLOOR.

BOWMAN FOSTER & ASSOCIATES, PC

SCALE: 1/8" = 1'-0" 0 4' 8' 16'

MARK	DESCRIPTION	DATE	APPR

NAVFAC

SEAL 07-03-16

HBA

A/E INFO

APPROVED

FOR COMMANDER NAVFAC

ACTIVITY

SATISFACTORY TO DATE

DES	IEP	DRW	RD	CHK	MED

PM

BRANCH MANAGER

CHIEF ENG/ARCH

FIRE PROTECTION

DEPARTMENT OF THE NAVY
NAVAL FACILITIES ENGINEERING COMMAND
NAVAL FACILITIES ENGINEERING COMMAND – NORFOLK, VIRGINIA
NORTH CAROLINA IPT
MCB CAMP LEJEUNE
JACKSONVILLE, NC
P-1475 CULTURAL ASSIMILATION FACILITY
LIGHTING FLOOR PLAN

SCALE: GRAPHIC
EPROJECT NO.: 13-86-6337
CONSTR. CONTR. NO. N40085-10-D-5301
NAVFAC DRAWING NO. 12711941
SHEET 69 OF 81
E-101

DRAWFORM REVISION: 15 MAY 2014

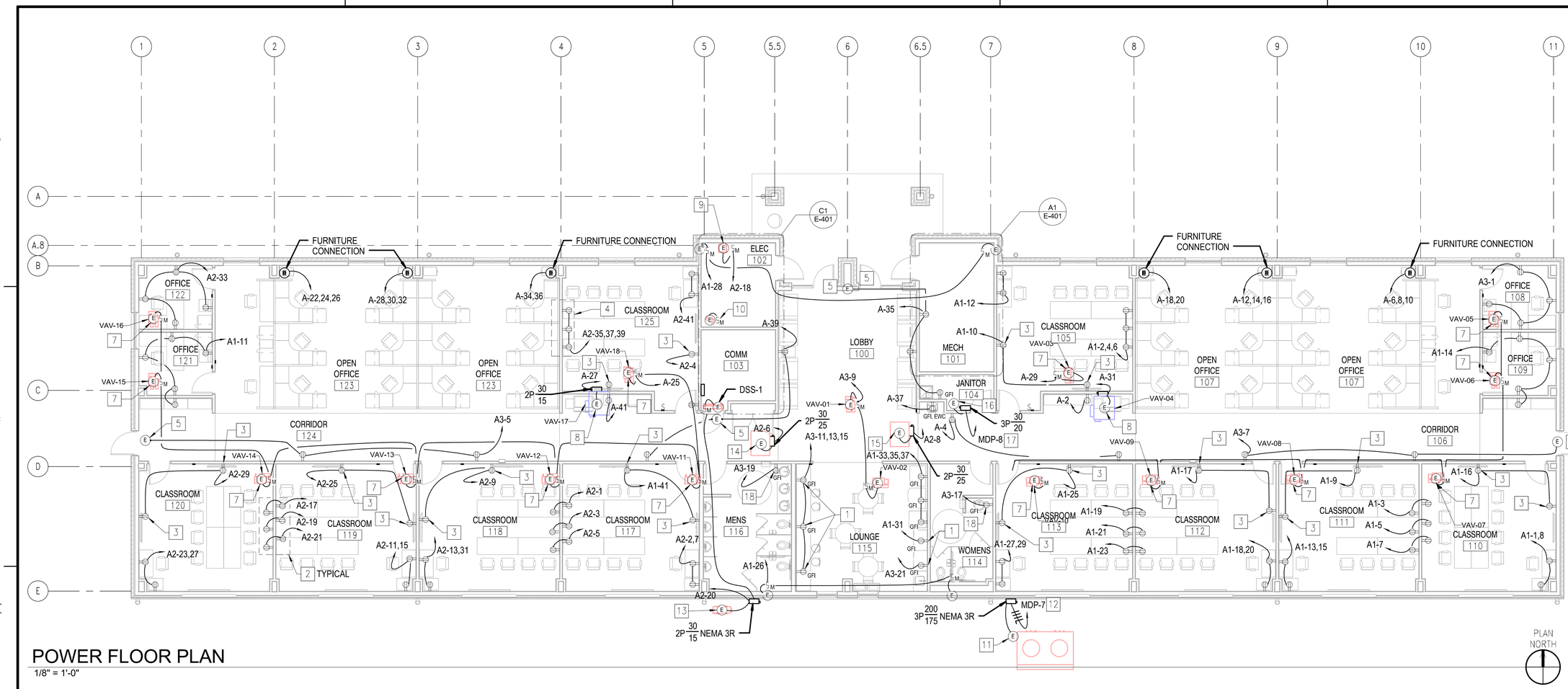

POWER FLOOR PLAN

1/8" = 1'-0"

GENERAL NOTES:

1. RUN ALL CONDUITS FOR RECEPTACLE CIRCUITS ALONG UNDERSIDE OF ROOF STRUCTURE AS HIGH AS POSSIBLE. GROUP CONDUITS WHERE APPLICABLE IN A TIGHT PARALLEL FASHION AND RUN ALONG ROOF STRUCTURE.
2. ALL CONDUITS FOR RECEPTACLE CIRCUITS SHALL BE PAINTED BLACK.
3. SEE "TYPICAL CLASSROOM TABLE CONFIGURATION" ON SHEET E-503 FOR MOUNTING COORDINATION OF OUTLETS FOR TABLES.

WORK NOTES:

1. MOUNT RECEPTACLES 6" ABOVE COUNTERTOP BACKSPLASH AT LOCATIONS INDICATED.
2. SEE "RECEPTACLE/TELECOMM INSTALLATION DETAIL", SHEET E-501 FOR MORE INFORMATION.
3. MOUNT RECEPTACLE 60" ABOVE FINISH FLOOR FOR MONITOR.
4. SEE SHEET E-501 FOR "RECEPTACLE INSTALLATION DETAIL".
5. REFER TO "SINGLE DOOR SECURITY ROUGH-IN DETAIL" ON SHEET E-504.
6. DSS-1 SERVED FROM DSS1-B.
7. VAV TERMINAL BOX, 120V, 1 PHASE.
8. FAN POWERED TERMINAL BOX, 4.7 FLA, 1/4 HP, 115V, 1 PHASE.
9. CONNECT EF-1, 100W, 115V, 1 PHASE.
10. CONNECT UNIT HEATER UH-1, 0.8A, 1 MCA, 115V, 1 PHASE.
11. CONNECT AIR COOLED CONDENSING UNIT CU-1, 125.1 MCA, 208V, 3 PHASE.
12. THREE #2/0 AND ONE #6 GND IN 1-1/2"C.
13. CONNECT DSS1-B, 13 MCA, 208V, 1 PHASE.
14. CONNECT ERV-1, 18.3 MCA, 115 V, 1 PHASE.
15. CONNECT ERV-2, 18.3 MCA, 115 V, 1 PHASE.
16. CONNECT ELECTRIC WATER HEATER EWH-1, 12 KW, 208 V, 3 PHASE.
17. THREE #10 AND ONE #10 GND IN 3/4"C.
18. MOUNT DEVICE 48" ABOVE FINISHED FLOOR TO TOP OF OUTLET BOX.

SCALE: 1/8" = 1'-0" 0 4' 8' 16'

BOWMAN FOSTER & ASSOCIATES, PC

NAVFAC

HBA

A/E INFO

APPROVED

FOR COMMANDER NAVFAC

ACTIVITY

SATISFACTORY TO DATE

DES IEP DRW RD CHK MED

PM

BRANCH MANAGER

CHIEF ENG/ARCH

FIRE PROTECTION

DEPARTMENT OF THE NAVY
NAVAL FACILITIES ENGINEERING COMMAND
NORTH CAROLINA IPT
NAVAL STATION – NORFOLK, VIRGINIA
MCB CAMP LEJEUNE
JACKSONVILLE, NC

P-1475 CULTURAL ASSIMILATION FACILITY

POWER FLOOR PLAN

SCALE: GRAPHIC
EPROJECT NO.: 13-86-6337
CONSTR. CONTR. NO. N40085-10-D-5301
NAVFAC DRAWING NO. 12711942
SHEET 70 OF 81

E-102

DRAWFORM REVISION: 10 MAY 2014

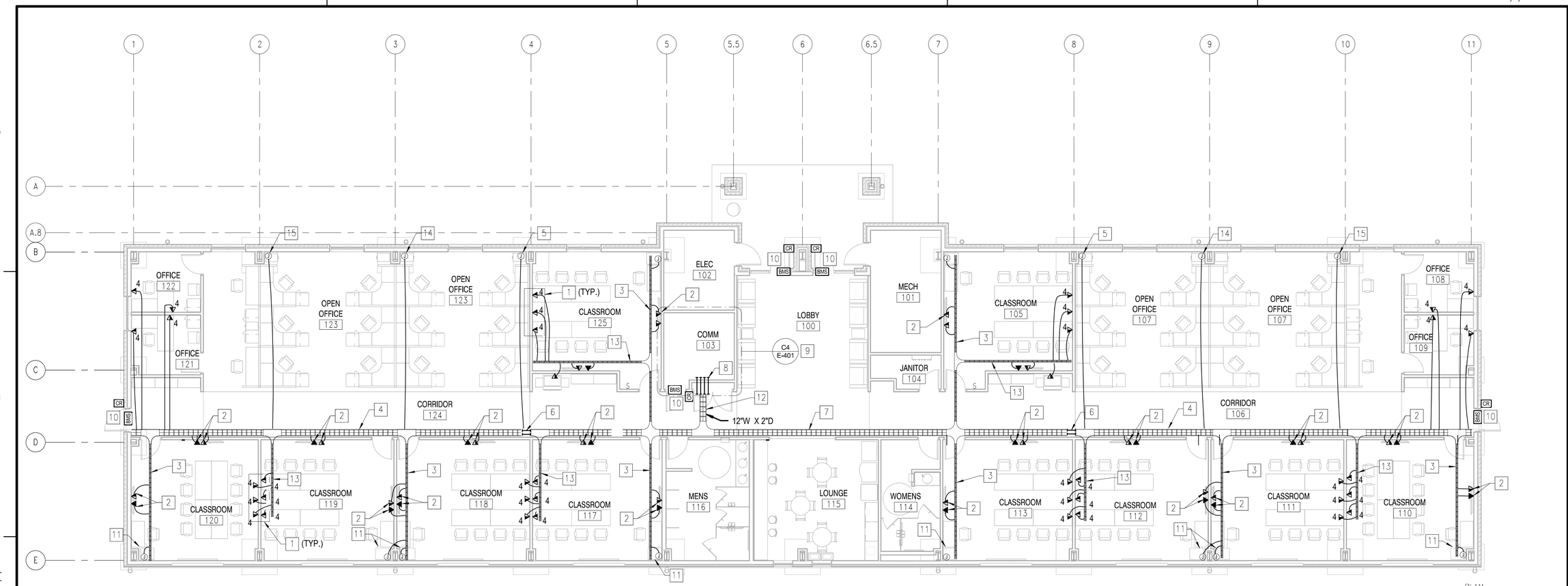

SPECIAL SYSTEMS FLOOR PLAN

1/8" = 1'-0"

GENERAL NOTES:

1. RUN ALL CONDUITS FOR TELECOMMUNICATIONS DROPS ALONG UNDERSIDE OF ROOF STRUCTURE AS HIGH AS POSSIBLE ALONG ROOF STRUCTURE. GROUP CONDUITS WHERE APPLICABLE IN A TIGHT PARALLEL FASHION AND RUN ALONG ROOF STRUCTURE.
2. ALL CONDUITS FOR TELECOMMUNICATIONS SHALL BE PAINTED BLACK.
3. SEE "TYPICAL CLASSROOM TABLE CONFIGURATION", ON SHEET E-501 FOR MOUNTING COORDINATION OF TELE/DATA BOX FOR TABLES.
4. PROVIDE CAT6 CABLING FOR ALL TELE/DATA DROPS INDICATED BACK TO TELECOMMUNICATIONS ROOM 103.
5. SEE SHEET E-503 FOR OUTLET DETAILS.
6. ALL CABLE TRAYS TO BE INSTALLED ON PROJECT ARE TO BE PROVIDED WITH A BLACK FINISH FROM THE MANUFACTURER.
7. ALL TELECOM TERMINATIONS SHALL BE ACCOMPLISHED BY THE CONTRACTOR AS DIRECTED BY THE GOVERNMENT.

WORK NOTES:

1. SEE "RECEPTACLE/TELECOMM INSTALLATION DETAIL", SHEET E-501 FOR MORE INFORMATION.
2. PROVIDE 5"W X 5"H X 2-7/8" DEEP FLUSH MOUNTED BOX WITH A 1F CONNECTOR AND DUAL CAT 6 JACK. SEE SHEET E-503 FOR OUTLET DETAILS. MOUNT DEVICE 60" ABOVE FINISH FLOOR FOR MONITOR.
3. PROVIDE 2"W X 2"D CABLE TRAY AT MINIMUM OF 13'-0" AFF TO BOTTOM OF CABLE TRAY. CABLE TRAY IS FOR TELECOMMUNICATIONS AND AUDIO VISUAL CABLING FROM A/V CREDENZA. MOUNT CABLE TRAY AS CLOSE TO WALL AS POSSIBLE AND ROUTE FROM MAIN CABLE TRAY IN CORRIDOR TO CREDENZA LOCATED NEXT TO INSTRUCTORS DESK.
4. PROVIDE 6"W X 2"D CABLE TRAY AT MINIMUM OF 13'-0" AFF TI BOTTOM OF CABLE TRAY.
5. PROVIDE 6 JACK FLUSH MOUNTED MUTOA FOR TELECOMMUNICATIONS FOR FURNITURE SYSTEMS WITH 1-1/4" CONDUIT FOR TELECOMMUNICATION CABLING FOR FURNITURE SYSTEMS. EACH WORKSTATION WILL HAVE ONE DUPLEX TELECOMM/DATA JACK.
6. PROVIDE TWO 4" CONDUIT SLEEVE THRU WALL FOR TELECOMMUNICATIONS CABLING.
7. PROVIDE 6"W X 2"D CABLE TRAY FROM CONDUIT SLEEVE TO CONDUIT SLEEVE TO ACCOMODATE ROUTING OF TELECOMMUNICATRION CABLING.
8. PROVIDE FOUR 4" CONDUIT SLEEVE THRU WALL FOR TELECOMMUNICATIONS CABLING.
9. SEE "ENLARGED TELECOMMUNICATIONS ROOM PLAN" SHEET E-401.
10. REFER TO "SINGLE DOOR SECURITY ROUGH IN DETAIL", ON SHEET E-504.
11. AUDIO/VISUAL CREDENZA.
12. PROVIDE 12"W X 2"D CABLE TRAY AT MINIMUM OF 13'-0" AFF TO BOTTOM OF CABLE TRAY.
13. PROVIDE 2"W X 2"D CABLE TRAY AT MINIMUM OF 13'-0" AFF TO BOTTOM OF CABLE TRAY.
14. PROVIDE 10 JACK FLUSH MOUNTED MUTOA FOR TELECOMMUNICATIONS FOR FURNITURE SYSTEMS WITH 1-1/4" CONDUIT FOR TELECOMMUNICATION CABLING FOR FURNITURE SYSTEMS EACH WORK STATION WILL HAVE ONE DUPLEX TELECOMM/DATA JACK.
15. PROVIDE 12 JACK MOUNTED MUTOA FOR TELECOMMUNICATIONS FOR FURNITURE SYSTEMS WITH 1-1/4" CONDUIT FOR TELECOMMUNICATION CABLING FOR FURNITURE SYSTEMS EACH WORK STATION WILL HAVE ONE DUPLEX TELECOMM/DATA JACK.

BOWMAN FOSTER & ASSOCIATES, PC

SCALE: 1/8" = 1'-0" (0 4' 8' 16')

NO.	DESCRIPTION	DATE	APPR

NAVFAC

SEAL: NORTH CAROLINA SEAL 2425 07-03-16

HBA

A/E INFO

APPROVED

FOR COMMANDER NAVFAC

ACTIVITY

SATISFACTORY TO DATE

DES	IEP	DRW	RD	CHK	MED

PM

BRANCH MANAGER

CHIEF ENG/ARCH

FIRE PROTECTION

DEPARTMENT OF THE NAVY
NAVAL FACILITIES ENGINEERING COMMAND
NAVAL FACILITIES ENGINEERING COMMAND – NORFOLK, VIRGINIA
NAVAL STATION
NORTH CAROLINA IPT
MCB CAMP LEJEUNE
JACKSONVILLE, NC

P-1475 CULTURAL ASSIMILATION FACILITY

SPECIAL SYSTEMS FLOOR PLAN

SCALE: GRAPHIC
EPROJECT NO.: 13-86-6337
CONSTR. CONTR. NO. N40085-10-D-5301
NAVFAC DRAWING NO. 12711943
SHEET 71 OF 81

E-103

DRAWFORM REVISION: 15 MAY 2014

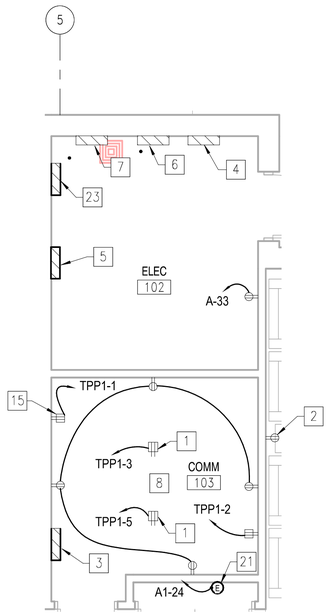

ENLARGED ELECTRICAL & TELECOMMUNICATIONS ROOMS POWER PLAN

1/4" = 1'-0"

E-102 C1 PLAN NORTH

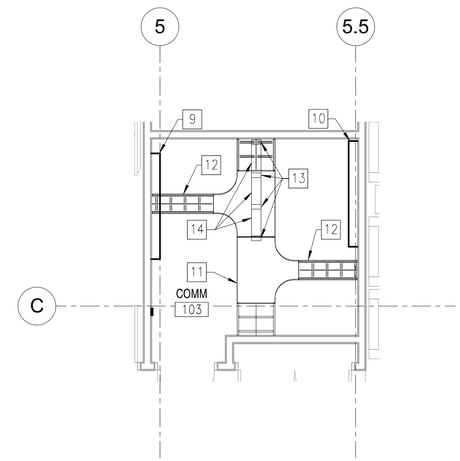

ENLARGED TELECOMM ROOM PLAN 8

1/4" = 1'-0"

E-103 C4 PLAN NORTH

WORK NOTES:

1. PENDANT OR WHIP MOUNT RECEPTACLE 7'-0" AFF. COORDINATE LOCATION OF RECEPTACLES WITH LOCATIONS OF TELECOMMUNICATIONS RACKS.
2. COORDINATE MOUNTING OF RECEPTACLE WITH LOCATION OF SECURITY EQUIPMENT.
3. PROVIDE PANEL "TPP1". SEE E-601 FOR PANELBOARD SCHEDULE.
4. PROVIDE A SERVICE ENTRANCE RATED PANEL "MDP". SEE E-601 FOR PANELBOARD SCHEDULE.
5. PROVIDE PANEL "A3". SEE E-602 FOR PANELBOARD SCHEDULE.
6. PROVIDE PANEL "A". SEE E-601 FOR PANELBOARD SCHEDULE.
7. PROVIDE PANEL "A1". SEE E-601 FOR PANELBOARD SCHEDULE.
8. PROVIDE ALL WALLS WITH TELECOMMUNICATIONS BACKBOARDS. BACKBOARD MOUNTING HEIGHT SHALL START AT 4" AFF AND EXTEND TO 8'-4" AFF.
9. SECURITY TERMINATION AREA.
10. TELEPHONE TERMINATION AREA.
11. PROVIDE 24"W LADDER RACK. MOUNT 7'-0" AFF TO BOTTOM OF CABLE RUNWAY.
12. PROVIDE 12"W LADDER RACK. MOUNT 7'-0" AFF TO BOTTOM OF CABLE RUNWAY.
13. PROVIDE 6" CABLE MANAGEMENT FOR TELECOMMUNICATIONS RACK.
14. PROVIDE 19" FLOOR MOUNTED TELECOMMUNICATIONS RACK. SEE TELECOMMUNICATIONS RACK ELEVATION THIS SHEET FOR MORE INFORMATION.
15. MOUNT RECEPTACLE ON TELEPHONE BACKBOARD.
16. CONNECT PUMPS P-1 AND P-2, 1 HP, 208V, 1 PHASE.
17. CONNECT BOILERS B-1 AND B-2, 120V, 1 PHASE.
18. CONNECT AIR HANDLER UNIT AHU-1, 29.5 MCA, 208V, 3 PHASE.
19. CONNECT UNIT HEATER UH-2, 0.8A, 1 MCA, 115V, 1 PHASE.
20. CONNECT SF-1, 100W, 115V, 1 PHASE.
21. CONNECT FIRE ALARM CONTROL PANEL, 120V, 1 PHASE.
22. THREE #10 AND ONE #10 GND IN 3/4"C.
23. PROVIDE PANEL "A2". SEE E-601 FOR PANELBOARD SCHEDULE.

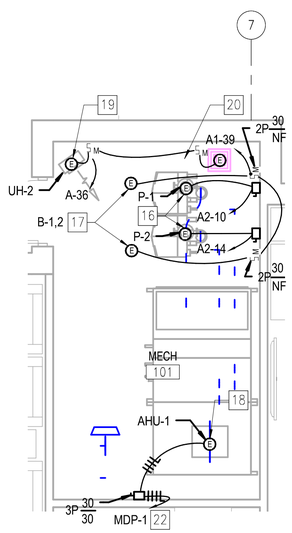

ENLARGED MECHANICAL ROOM PLAN

1/4" = 1'-0"

E-102 A1 PLAN NORTH

PROVIDE EIGHT (48) PATCH PANELS TO ACCOMODATE THE NEW ADDITION

NETWORK EQUIPMENT

TELECOM RM 103

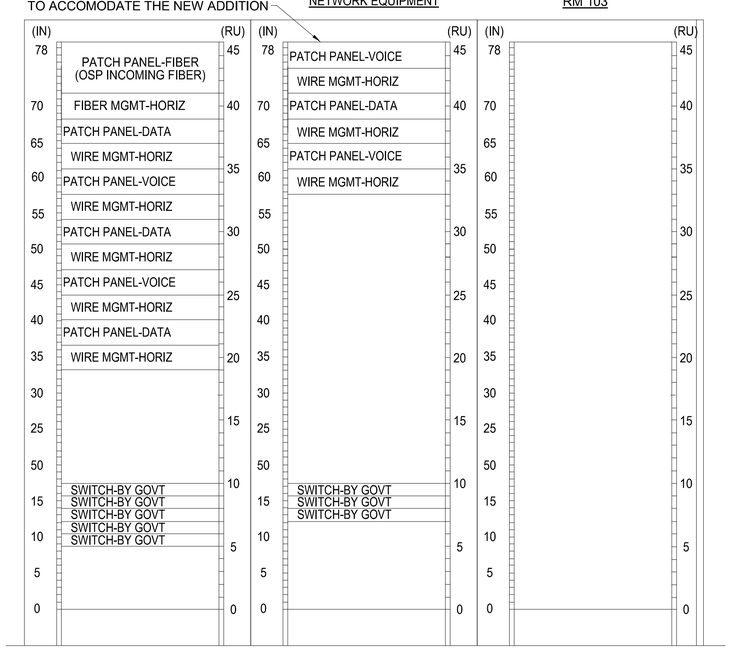

TELECOMMUNICATIONS RACK ELEVATION

NO SCALE

A2

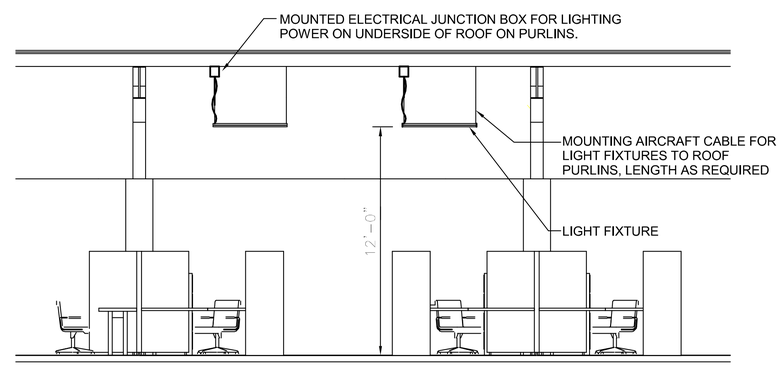

LIGHTING FIXTURE MOUNTING SECTION

NO SCALE

E-101 A4

BOWMAN FOSTER & ASSOCIATES, PC

SCALE: 1/4" = 1'-0" 0 2' 4' 8'

MK	DESCRIPTION	DATE	APPR

NAVFAC

SEAL

HBA

A/E INFO

APPROVED

FOR COMMANDER NAVFAC

ACTIVITY

SATISFACTORY TO DATE

DES IEP | DRW RD | CHK MED

PM

BRANCH MANAGER

CHIEF ENG/ARCH

FIRE PROTECTION

DEPARTMENT OF THE NAVY
NAVAL FACILITIES ENGINEERING COMMAND
NAVAL FACILITIES ENGINEERING COMMAND
NORFOLK, VIRGINIA
NAVAL STATION – JACKSONVILLE, NC
NORTH CAROLINA DPT.
MCB CAMP LEJEUNE

P-1475 CULTURAL ASSIMILATION FACILITY

ELECTRICAL ENLARGED PLANS

SCALE: GRAPHIC

EPROJECT NO.: 13-86-6337

CONSTR. CONTR. NO. N40085-10-D-5301

NAVFAC DRAWING NO. 12711944

SHEET 72 OF 81

E-401

DRAWFORM REVISION: 10 MAY 2014

TS-16302L (JANUARY 1988)

POLE # (45'-3)
X-FB, 35FR3
X-FB, 15F3
TF (25KVA, 13.2 GRD. Y/7.6 KV - 120/240 V.)
S1, SDE2
GUY (5/16")
ANCHOR (10" SCREW) (12' GUY LEAD)
GROUND

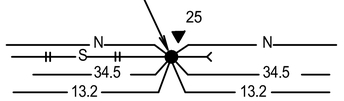

PLAN VIEW

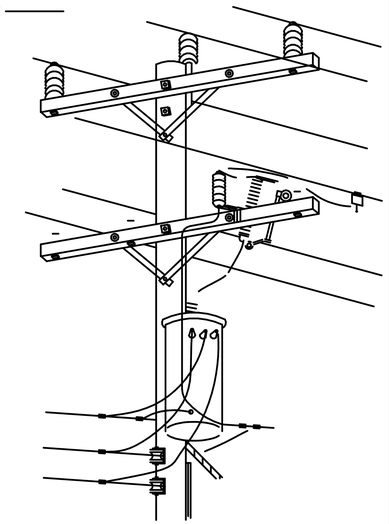

NOTES:

1. THE SYMBOLS LISTED ABOVE INCLUDE MATERIALS (DESCRIBED BY OVERHEAD SKETCHES) WHICH ARE GRAPHICALLY ILLUSTRATED BY THIS PICTURE. SEE SKETCH TS-16302L-1.3A FOR EXPLANATORY NOTES.

2. EACH SKETCH CONTAINS MATERIAL ITEMS WHICH COMPRISE A PART OF EACH INDIVIDUAL SYMBOL REFERENCED BY THAT SKETCH, THESE ITEMS ARE INDICATED BY CIRCLED NUMERALS WHICH ARE IDENTIFIED BY SKETCHES TS-16302L-1.5 AND TS-16302L-1.5A.

3. SPACING REQUIREMENTS RELATED TO INDIVIDUAL COMPONENTS OF A SYMBOL ARE INDICATED ON THE APPROPRIATE SKETCH. VERTICAL SPACING REQUIREMENTS BETWEEN CIRCUITS AND/OR SYSTEMS ARE INDICATED ON SKETCH TS-16302L-1.4. ALL OTHER SEPARATIONS BETWEEN CIRCUITS, EQUIPMENT, ETC., SHALL CONFORM TO THE NATIONAL ELECTRICAL SAFETY CODE-ANSI C2.

SKETCH TS-16302L-1.3

METHOD OF SHOWING SYMBOLS

TS-16302L (JANUARY 1988)

EXPLANATORY NOTES - METHOD OF SHOWING SYMBOLS

1. SYMBOLS ARE SHOWN IN THE BASIC ORDER AS THEY APPEAR ON THE POLE, BY STARTING AT THE TOP AND WORKING DOWN.

2. NUMERALS PRECEDING THE SYMBOL INDICATE THE MINIMUM REQUIRED VOLTAGE KV. RATING (5,15,35) OF THE ASSEMBLY, IF APPLICABLE.

3. NUMERAL FOLLOWING THE SYMBOL INDICATES THE NUMBER OF CONDUCTORS ASSOCIATED WITH THE ASSEMBLY, IF APPLICABLE.

4. NUMERAL IN PARENTHESIS FOLLOWING THE SYMBOL DENOTES THE NUMBER OF ASSEMBLIES REQUIRED, IF MORE THAN ONE.

5. DATA IN PARENTHESIS FOLLOWING THE SYMBOL PROVIDES INFORMATION RELATIVE TO THE SYMBOL.

EXPLANATION OF SYMBOLS LISTED FOR POLE ON SKETCH TS-16302L-1.3

PROVIDE 45 FOOT LONG, CLASS 3 POLE CONTAINING:

X-FB - 8' CROSSARM WITH FLAT BRACE
35FR3 - 35KV INSULATORS, FLAT (MOUNTED HORIZONTAL ON CROSS-ARM), RIDGE PIN (CENTER PHASE ON POLE TOP PIN), THREE CONDUCTORS
X-FB - 8' CROSSARM WITH FLAT BRACE
15F3 - 15KV INSULATORS, FLAT (MOUNTED HORIZONTAL ON CROSSARM), THREE CONDUCTORS. NOTE: THIS SYMBOL CALLS FOR THREE CROSSARM MOUNTED PINS IN LIEU OF RIDGE PIN ON CENTER PHASE.

TF - TRANSFORMER ON FLAT (HORIZONTAL) CONSTRUCTION. DATA IN PARENTHESIS DESCRIBES THE TRANSFORMER CHARACTERISTICS.
S1 - SECONDARY, ONE CONDUCTOR, TANGENT CONSTRUCTION (COMMON NEUTRAL).
SDE2 - SECONDARY DEADEND, TWO CONDUCTORS, OPEN WIRE
GUY (5/16") - DOWN GUY - WIRE SIZE 5/16"

ANCHOR (10" SCREW) - 10" SCREW TYPE ANCHOR WITH 12 FT. GUY LEAD.
NOTE: NO PLATE IS INCLUDED FOR THE ANCHOR SYMBOL.
GROUND - NO EXPLANATION NECESSARY

SKETCH TS-16302L-1.3A

EXPLANATION OF NOTES/SYMBOLS

TS-16370-42

REVISED 01/06/94

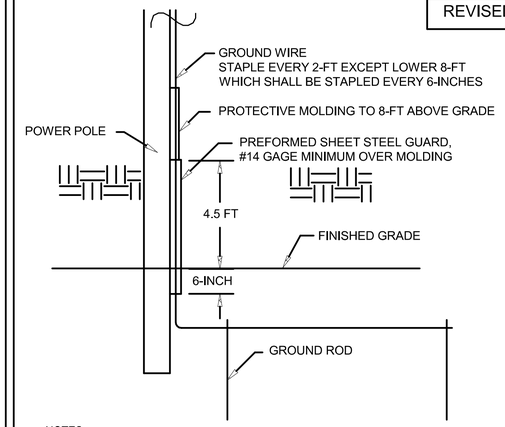

NOTES:

1. USE ADDITIONAL GROUND RODS, WHEN REQUIRED, TO OBTAIN RESISTANCE VALUE , AS SPERIFIED.

2. MAKE GROUNDING CONNECTIONS TO ALL EQUIPMENT ON POLE AS SPECIFIED.

SKETCH TS-16370-42

GROUND

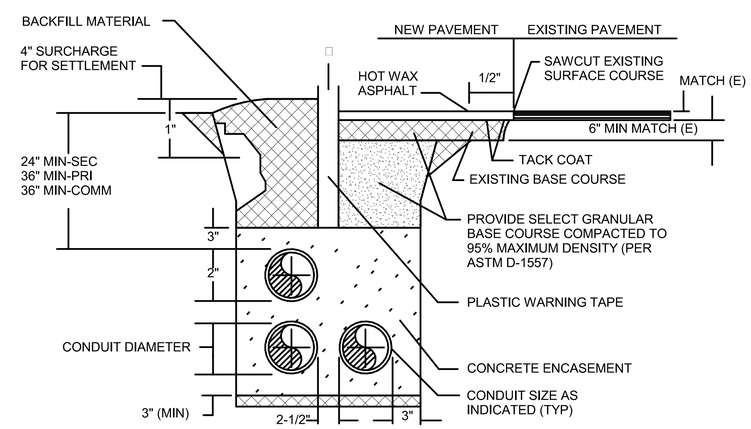

UNIVERSAL DUCTBANK DETAIL

NO SCALE

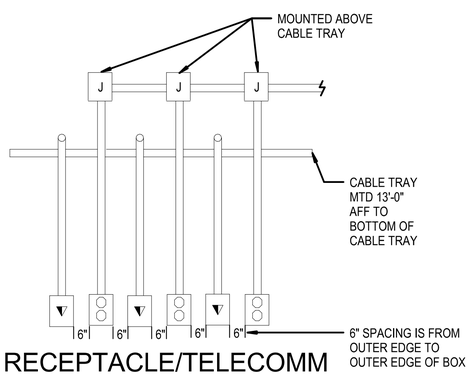

RECEPTACLE/TELECOMM INSTALLATION DETAIL

NO SCALE

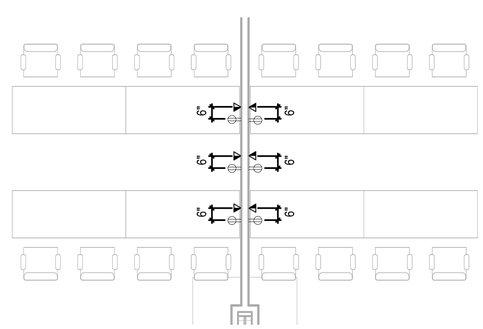

TYPICAL CLASSROOM TABLE CONFIGURATION

1/4" = 1'-0"

SCALE: 1/4" = 1'-0" 0 2' 4' 8'

NO.	DESCRIPTION	DATE	APPR

NAVFAC

SEAL 07-03-16

HBA

A/E INFO

APPROVED

FOR COMMANDER NAVFAC

ACTIVITY

SATISFACTORY TO DATE

DES IEP DRW RD CHK MED

PM

BRANCH MANAGER

CHIEF ENG/ARCH

FIRE PROTECTION

DEPARTMENT OF THE NAVY
NAVAL FACILITIES ENGINEERING COMMAND
NAVAL FACILITIES ENGINEERING COMMAND
NAVAL STATION - NORFOLK, VIRGINIA
NORTH CAROLINA IPT
MCB CAMP LEJEUNE
JACKSONVILLE, NC

P-1475 CULTURAL ASSIMILATION FACILITY

ELECTRICAL DETAILS

BOWMAN FOSTER & ASSOCIATES, PC

SCALE: GRAPHIC
EPROJECT NO.: 13-86-6337
CONSTR. CONTR. NO. N40085-10-D-5301
NAVFAC DRAWING NO. 12711945
SHEET 73 OF 81

E-501

DRAWFORM REVISION: 10 MAY 2014

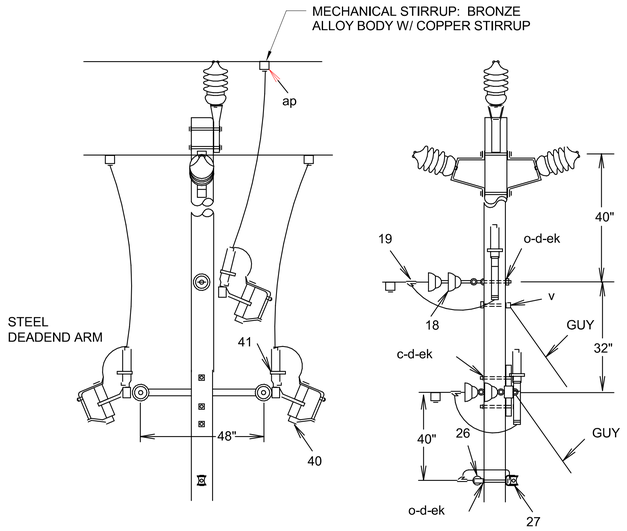

ITEM	NO.	MATERIAL
c	3	Bolt, machine, 5/8" x required length
d	5	Washer, square, 2-1/4"
c	3	Bolt, eye, 5/8" x required length
v	1	Guy Attachment, through bolt type
ap	3	Hot Line Clamp w/ Stirrup
aq		Jumper, bare, stranded, as required
ek	6	Locknuts
18	12	Bell type suspension insulator with connecting hardware
19	8	Strain Clamp
26	2	Clevis bracket for spool insulator
27	2	Spool insulator
40	3	Fused Cutout, as specified
41	3	Surge Arrester, as specified

NOTES:

1. PROVIDE PIN INSULATOR WITH STEEL ANGLE PIN FOR CENTER CONDUCTOR JUMPER WHEN TAP IS NOT INDICATED TO BE FUSED.
2. FUSE SIZED SHALL BE AS DIRECTED BY CONTRACTING OFFICER; RATED 100 AMPERE SIZE.

THREE-PHASE TAP

LPDE3-N-TAP

POLE LINE MATERIAL LIST

TS-16302L (JANUARY 1988)

1. FLAT STEEL BRACE (TWO PIECES)
2. MACHINE BOLT, 3/8" X LENGTH NEEDED WITH WASHER, NUT AND LOCKWASHER
3. 8' WOOD CROSSARM
4. MACHINE BOLT, 5/8" X LENGTH NEEDED WITH WASHER, NUT AND LOCKWASHER
5. TIMBER CONNECTOR
6. LAGSCREW, 1/2" X 4"
7. ANGLE STEEL BRACE (TWO PIECES)
8. MACHINE BOLT, 1/2" X LENGTH NEEDED, WITH WASHER, NUT & LOCKWASHER
9. DEADEND BOX
10. STEEL PIN
11. PIN INSULATOR
12. GRID GAIN, USED ONLY WHEN THERE IS NO POLE GAIN
13. ANGLE STEEL BRACE (ONE PIECE)
14. 10' WOOD CROSSARM
15. 5/8" EYE NUT
16. 5/8" EYE BOLT, LENGTH AS NEEDED, WITH WASHER, NUT & LOCKWASHER
17. EXTENSION LINK
18. BELL TYPE SUSPENSION INSULATOR WITH CONNECTING HARDWARE
19. STRAIN CLAMP
20. STEEL ANGLE PIN
21. CLUSTER MOUNTING BRACKET, STEEL
22. TRANSFORMER GROUNDING CONNECTION
23. STIRRUP
24. SECONDARY LEAD SUPPORT BRACKET
25. ADAPTER PLATE FOR CLUSTER MOUNTING
26. CLEVIS BRACKET FOR SPOOL INSULATOR
27. SPOOL INSULATOR
28. U BOLT CLAMP
29. PREFORMED GUY GRIP
30. GUY HOOK
31. GUY STRAIN INSULATOR
32. GUY WIRE, SIZE AS SPECIFIED
33. #4 WP CU. SOFT DRAWN GROUND WIRE
34. GROUND CLAMP
35. CONDUIT COUPLING
36. CONDUIT BEND
37. INSULATED BUSHING
38. PERFORATED STRAPPING, 1-1/2" WIDE
39. HOT LINE CLAMP
40. FUSED CUTOUT, AS SPECIFIED
41. SURGE ARRESTER, AS SPECIFIED
42. POLE TOP PIN (RIDGE PIN) - 24 INCHES LONG
43. CROSSARM ANGLE PIN
44. ANGLE POLE TOP PIN
45. SOFT DRAWN WIRE-SIZE
    (a) MATCH OR EXCEED AMPACITY OF CONNECTING CABLE, OR
    (b) 125% OF TRANSFORMER FULL LOAD CURRENT, BUT NOT LESS THAN NO. 4 A.W.G.

SKETCH TS-16302L-1.5

POLE LINE MATERIAL LIST

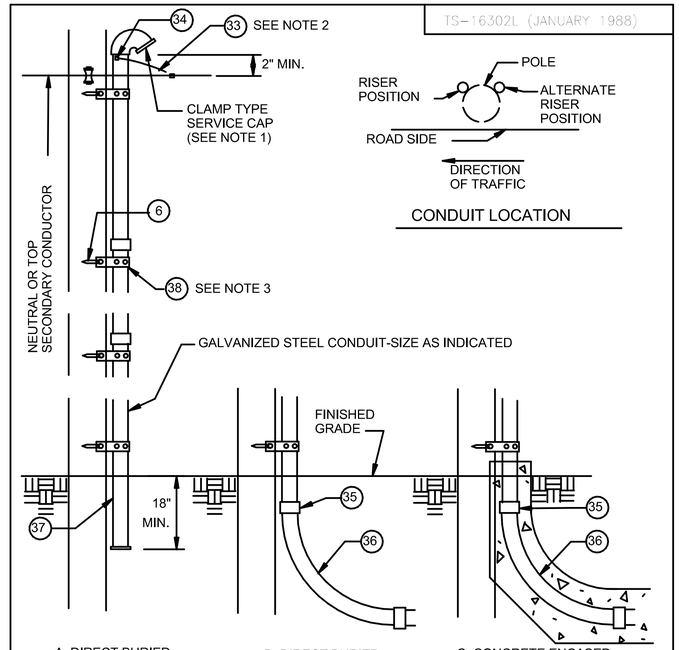

CONDUIT LOCATION

TS-16302L (JANUARY 1988)

NOTES

1. ON CONDUIT RISER FOR PRIMARY CIRCUITS, ELIMINATE SERVICE CAP AND PROVIDE GROUNDING TYPE INSULATING BUSHING.
2. CONNECT TO GROUNDED NEUTRAL OR PROVIDE GROUND PER SPECIFICATIONS.
3. SPACE STRAPS AT MAXIMUM OF 4' INTERVALS.

SKETCH TS-16302L-35

CONDUIT RISER (SIZE & TYPE AS INDICATED)

TS-16302L (JANUARY 1988)

POLE LINE MATERIAL LIST

46. TRI-MOUNT BRACKET
47. TERMINATOR, PORCELAIN HOUSED
48. MOUNTED BRACKET
49. CABLE GRIP HANGER
50. HOSE CLAMP
51. STUD, 3/4" X 1-3/4"
52. LINE POST INSULATOR
53. TRIPLE INSULATOR BRACKET
54. ANGLE CLAMP
55. INSULATOR, LINE POST CLAMP
56. 4' CROSSARM
57. CROSSARM GAIN BRACKET
58. PULLEY BRACKET
59. WEDGE CLAMP
60. MIDSPAN SERVICE CLAMP
61. STUD, 7"
62. SADDLE, ANGLE
63. SADDLE CROSSARM
64. FITTING, POLE TOP
65. CONNECTOR
66. SUSPENSION CLAMP
67. TIE, SERVICE CABLE
68. 54" FIBERGLASS STRAIN INSULATOR

SKETCH TS-16302L-1.5A

POLE LINE MATERIAL LIST

NO.	DATE	DESCRIPTION	APPR

NAVFAC

SEAL

HBA

A/E INFO

APPROVED

FOR COMMANDER NAVFAC

ACTIVITY

SATISFACTORY TO DATE

DES | IEP | DRW | RD | CHK | MED

PM

BRANCH MANAGER

CHIEF ENG/ARCH

FIRE PROTECTION

DEPARTMENT OF THE NAVY
NAVAL FACILITIES ENGINEERING COMMAND
NORTH CAROLINA IPT
MCB CAMP LEJEUNE
NAVAL FACILITIES ENGINEERING COMMAND
NAVAL STATION – NORFOLK, VIRGINIA
JACKSONVILLE, NC

P-1475 CULTURAL ASSIMILATION FACILITY

ELECTRICAL DETAILS

BOWMAN FOSTER & ASSOCIATES, PC

SCALE:	GRAPHIC
EPROJECT NO.:	13-86-6337
CONSTR. CONTR. NO.	N40085-10-D-5301
NAVFAC DRAWING NO.	12711946
SHEET	74 OF 81

E-502

DRAWFORM REVISION: 10 MAY 2014

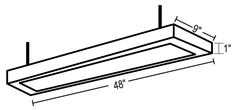

LUMINAIRE REQUIREMENTS:

1. HOUSING - EXTRUDED ALUMINUM HOUSING.
2. COLOR - COLOR FOR HOUSING AND END CAPS IS WHITE, BLACK OR PAINTED ALUMINUM. CONSULT FACTORY FOR CUSTOM COLORS.
3. SOURCE - TWO LED LUMEN PACKAGES AND THREE AVAILABLE COLOR TEMPERATURE OPTIONS (3000K, 3500K AND 4000K) - ALL WITHIN 2.5 MAC ADAM ELLIPSES.
4. OPTICS - SOFTSHINE OPTICAL SYSTEM CONSISTS OF HIGH PERFORMANCE ACRYLIC LENS AND MICROSTRUCTURE FILM.
5. ELECTRICAL - LED LIGHT ENGINE - CONSISTING OF MODULAR LED BOARDS AND ELDO LED DIMMING DRIVER IS RATED FOR 50,000 HOURS AT 25°C AMBIENT TEMPERATURE. SPECIFY 120V, 277V OR 347V. PRE-WIRED WITH 16 AWG FIXTURE WIRE. FOR SPECIAL CIRCUITING OR WIRE GAUGE, CONSULT FACTORY. PLUG-IN ELECTRICAL CONNECTORS INCLUDED.
6. VALIDATION - CSA/CUS LISTED. LM-79 TESTED. DESIGN LIGHTS CONSORTIUM QUALIFIED.
7. EFFICIENCY GIVEN INTERIOR CAVITY REFLECTANCES OF 80-50-20.

1'x4' PENDANT MOUNT (A)

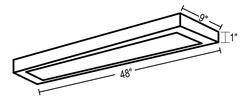

LUMINAIRE REQUIREMENTS:

1. HOUSING - EXTRUDED ALUMINUM HOUSING.
2. COLOR - COLOR FOR HOUSING AND END CAPS IS WHITE, BLACK OR PAINTED ALUMINUM. CONSULT FACTORY FOR CUSTOM COLORS.
3. SOURCE - TWO LED LUMEN PACKAGES AND THREE AVAILABLE COLOR TEMPERATURE OPTIONS (3000K, 3500K AND 4000K) - ALL WITHIN 2.5 MAC ADAM ELLIPSES.
4. OPTICS - SOFTSHINE OPTICAL SYSTEM CONSISTS OF HIGH PERFORMANCE ACRYLIC LENS AND MICROSTRUCTURE FILM.
5. ELECTRICAL - LED LIGHT ENGINE - CONSISTING OF MODULAR LED BOARDS AND ELDO LED DIMMING DRIVER IS RATED FOR 50,000 HOURS AT 25°C AMBIENT TEMPERATURE. SPECIFY 120V, 277V OR 347V. PRE-WIRED WITH 16 AWG FIXTURE WIRE. FOR SPECIAL CIRCUITING OR WIRE GAUGE, CONSULT FACTORY. PLUG-IN ELECTRICAL CONNECTORS INCLUDED.
6. VALIDATION - CSA/CUS LISTED. LM-79 TESTED. DESIGN LIGHTS CONSORTIUM QUALIFIED.
7. EFFICIENCY GIVEN INTERIOR CAVITY REFLECTANCES OF 80-50-20.

1'X4' RECESSED FIXTURE (B)

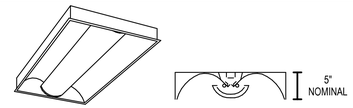

LUMINAIRE REQUIREMENTS:

1. CONSTRUCTION - HOUSING IS GLOSS WHITE ENAMEL ON COLD-ROLLED STEEL. ALL EDGES HEMMED OR ROUNDED. ALL SHIELDINGS PIVOT ON LIGHT TRAPS AND SWING DOWN FOR EASY ACCESS. MOLDED LIGHT TRAPS PREVENT LIGHT LEAKS BETWEEN SHIELDING AND END-PLATES. ALL AIR AND SCREW SLOT UNITS SUPPLIED WITH SCREW-ON TEE BAR CLIPS. DRIVER ACCESS IS FROM BELOW.
2. OPTICS - MATTE WHITE POLYESTER POWDER PAINT FINISHED REFLECTORS PROVIDE UNIFORM LIGHT DISTRIBUTION. ALL DIFFUSERS CONTROL DIRECT LIGHT DISTRIBUTION AND GLARE BY SHIELDING LEDS FROM DIRECT VIEW. METAL DIFFUSER STAGGERED ROUND HOLES (MDR) 52% OPEN PERFORATED METAL WITH .075" DIAMETER HOLES BACKED WITH WHITE ACRILIC DIFFUSER. STRAIGHT BLADE LOUVER (SBL) SIDES OF PERFORATED METAL WITH STAGGERED ROUND HOLES AND SOLID BLADE LOUVERED CENTER. SIDES AND LOUVER BACKED WITH WHITE ACRYLIC DIFFUSER. ACRYLIC DIFFUSER PRISMATIC LENS (ADP) EXTRUDED ACRYLIC LENS BACKED WITH WHITE ACRYLIC DIFFUSER.
3. ELECTRIC - LONG-LIFE LEDS, COUPLED WITH HIGH-EFFICIENCY DRIVERS, PROVIDE SUPERIOR QUANTITY AND QUALITY OF ILLUMINATION FOR EXTENDED SERVICE LIFE. 90% LED LUMEN MAINTENANCE AT 60,000 HOURS (L90/60,000). ELDO LED DRIVER OPTIONS DELIVER CHOIC OF DIMMING RANGE AND CHOICE OF CONTROL, WHILE ASSURING FLICKER-FREE, LOW-CURRENT INRUSH, 89% EFFICIENCY AND LOW EMI. OPTIONAL INTEGRATEDNLIGHT CONTROLS MAKE EACH LUMINAIRE ADDRESSABLE - ALLOWING IT TO DIGITALLY COMMUNICATE WITH OTHER NLIGHT-ENABLED CONTROL DEVICES AND THE AVL LUMINAIRES USING STANDARD CAT-5 CABLING. UNIQUE PLUG-AND-PLAY CONVENIENCE AS DEVICES AND LUMINAIRES AUTOMATICALLY DISCOVER EACH OTHER AND SELF-COMMISSION. LUMEN MANAGEMENT: UNIQUE LUMEN MANAGEMENT SYSTEM (OPTION N80) PROVIDES ONBOARD INTELLIGENCE THAT ACTIVELY MANAGES THE LED LIGHT SOURCE SO THAT CONSTANT LUMEN OUTPUT IS MAINTAINED OVER THE SYSTEM LIFE, PREVENTING THE ENERGY WASTE CREATED BY THE TRADITIONAL PRACTICE OF OVER-LIGHTING. DIRVER DISCONNECT PROVIDED WHERE REQUIRED TO COMPLY WITH US AND CANADIAN CODES.
4. LISTINGS - UL LISTED AND CSA CERTIFIED TO MEET US STANDARDS. C RATED.
5. EFFICIENCY GIVEN INTERIOR CAVITY REFLECTANCES OF 80-50-20.

2'X4' DIRECT RECESSED FIXTURE (C)

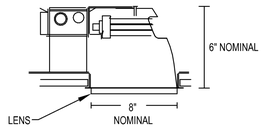

LUMINAIRE REQUIREMENTS:

1. OPTICAL SYSTEM: SELF-FLANGED SEMI-SPECULAR, MATTE-DIFFUSE OR SPECULAR FINISHING TRIM. PATENTED BOUNDING RAY OPTICAL DESIGN (U.S. PATENT NO. 5,800,050), 45 CUTOFF TO SOURCE AND SOURCE IMAGE. TOP-DOWN FLASH CHARACTERISTIC. POLYCARBONATE LENS INTEGRAL TO LIGHT ENGINE.
2. ELECTRICAL SYSTEM: FULLY SERVICEABLE AND UPGRADEABLE LENSED LED LIGHT ENGINE. 70% LUMEN MAINTENANCE AT 60,000 HOURS. TESTED ACCORDING TO LM-79 AND LM-80 STANDARDS. OVERLOAD AND SHORT CIRCUIT PROTECTED. 2.5 SDCM: 85 CRI TYPICAL, 90+ CRI OPTIONAL.
3. LISTINGS: FIXTURES ARE CSA CERTIFIED AND UL LISTED TO MEET US STANDARDS; WET LOCATION, COVERED CEILING.

RECESSED CANOPY DOWNLIGHT (D)

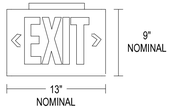

LUMINAIRE REQUIREMENTS:

1. HOUSING - DIE-CAST ALUMINUM OR HIGH-IMPACT, UV-STABILIZED, INJECTION-MOLDED THERMOPLASTIC. SINGLE OR DOUBLE-FACED AS INDICATED.
2. FINISH (ON CAST ALUMINUM HOUSING ONLY) - TEXTURED POWDER COAT FINISH OPTIONS INCLUDE WHITE, WHITE WITH BRUSHED ALUMINUM FACE, BLACK, OR BLACK WITH BRUSHED ALUMINUM FACE.
3. LETTERS/CHEVRONS - MINIMUM 6" HIGH WITH 3/4" STROKE. RED OR GREEN LETTERS AS INDICATED. PROVIDE CHEVRONS AS INDICATED EITHER LEFT, RIGHT OR BOTH DIRECTIONS AS INDICATED. CHEVRONS PUNCHED OUT THROUGH HOUSING AS REQUIRED.
4. EMERGENCY PACK - SOLID-STATE, CONSTANT-CURRENT TYPE BATTERY CHARGER WITH MAINTENANCE-FREE, NICKEL-CADMIUM BATTERY, AC-ON INDICATOR LAMP AND TEST SWITCH.
5. MOUNTING - UNIVERSAL MOUNTING KIT FOR CEILING, WALL OR END-OF-FIXTURE MOUNTING.
6. ILLUMINATION - PROVIDED BY RED, GREEN OR WHITE HIGH-OUTPUT LEDS INSIDE OF FIXTURE HOUSING. PROVIDE POLYSTYRENE DIFFUSER IN COLOR INDICATED WITH FREQUENCY-MATCHED SILKSCREEN COATING FOR MAXIMUM LED LIGHT OUTPUT.
7. CERTIFICATION - UL LISTED AND CERTIFIED FOR DAMP LOCATIONS.

LED EXIT SIGN (E)

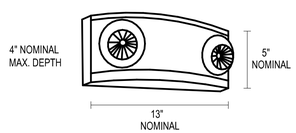

LUMINAIRE REQUIREMENTS:

1. HOUSING - UV STABLE, FLAME-RATED, HIGH-IMPACT THERMOPLASTIC IN WHITE OR BLACK TEXTURED FINISH.
2. INTERNAL COMPONENTS - FULLY AUTOMATIC, SOLID STATE, CONSTANT VOLTAGE, CURRENT-LIMITED BATTERY CHARGER; MAINTENANCE-FREE LEAD-ACID BATTERY; AND BUILT-IN OVERLOAD AND LOW-VOLTAGE BATTERY PROTECTION.
3. EXTERIOR HOUSING INDICATORS - LED AC-ON INDICATOR AND INTEGRAL TEST SWITCH.
4. LAMP HEADS - UV STABLE, FLAME RATED POLYCARBONATE THERMOPLASTIC. MR16 HALOGEN LAMPS SHALL BE 5 WATTS, HIGH-OUTPUT OR AS INDICATED IN LIGHTING FIXTURE SCHEDULE.
5. MOUNTING - DIRECTLY TO 4" OCTAGONAL OR SQUARE OUTLET BOX.
6. CERTIFICATION - UL LISTED AND LABELED. COMPLIES WITH UL 924 AND NFPA 101 REQUIREMENTS. LISTED FOR DAMP LOCATIONS.
7. OPTIONS - VOLTMETER, VANDEL-RESISTANT SHIELD, SELF-DIAGNOSTIC/TESTING ELECTRONICS AND WIRE GUARD.

DECORATIVE EMERGENCY LIGHTING UNIT (F)

REVISED:	AUGUST 2004	LIGHTING PLATE:	NL-67

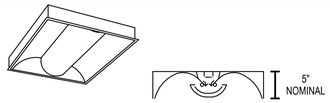

LUMINAIRE REQUIREMENTS:

1. CONSTRUCTION - HOUSING IS GLOSS WHITE ENAMEL ON COLD-ROLLED STEEL. ALL EDGES HEMMED OR ROUNDED. ALL SHIELDINGS PIVOT ON LIGHT TRAPS AND SWING DOWN FOR EASY ACCESS. MOLDED LIGHT TRAPS PREVENT LIGHT LEAKS BETWEEN SHIELDING AND END-PLATES. ALL AIR AND SCREW SLOT UNITS SUPPLIED WITH SCREW-ON TEE BAR CLIPS. DRIVER ACCESS IS FROM BELOW.
2. OPTICS - MATTE WHITE POLYESTER POWDER PAINT FINISHED REFLECTORS PROVIDE UNIFORM LIGHT DISTRIBUTION. ALL DIFFUSERS CONTROL DIRECT LIGHT DISTRIBUTION AND GLARE BY SHIELDING LEDS FROM DIRECT VIEW. METAL DIFFUSER STAGGERED ROUND HOLES (MDR) 52% OPEN PERFORATED METAL WITH .075" DIAMETER HOLES BACKED WITH WHITE ACRILIC DIFFUSER. STRAIGHT BLADE LOUVER (SBL) SIDES OF PERFORATED METAL WITH STAGGERED ROUND HOLES AND SOLID BLADE LOUVERED CENTER. SIDES AND LOUVER BACKED WITH WHITE ACRYLIC DIFFUSER. ACRYLIC DIFFUSER PRISMATIC LENS (ADP) EXTRUDED ACRYLIC LENS BACKED WITH WHITE ACRYLIC DIFFUSER.
3. ELECTRIC - LONG-LIFE LEDS, COUPLED WITH HIGH-EFFICIENCY DRIVERS, PROVIDE SUPERIOR QUANTITY AND QUALITY OF ILLUMINATION FOR EXTENDED SERVICE LIFE. 90% LED LUMEN MAINTENANCE AT 60,000 HOURS (L90/60,000). ELDO LED DRIVER OPTIONS DELIVER CHOIC OF DIMMING RANGE AND CHOICE OF CONTROL, WHILE ASSURING FLICKER-FREE, LOW-CURRENT INRUSH, 89% EFFICIENCY AND LOW EMI. OPTIONAL INTEGRATEDNLIGHT CONTROLS MAKE EACH LUMINAIRE ADDRESSABLE - ALLOWING IT TO DIGITALLY COMMUNICATE WITH OTHER NLIGHT-ENABLED CONTROL DEVICES AND THE AVL LUMINAIRES USING STANDARD CAT-5 CABLING. UNIQUE PLUG-AND-PLAY CONVENIENCE AS DEVICES AND LUMINAIRES AUTOMATICALLY DISCOVER EACH OTHER AND SELF-COMMISSION. LUMEN MANAGEMENT: UNIQUE LUMEN MANAGEMENT SYSTEM (OPTION N80) PROVIDES ONBOARD INTELLIGENCE THAT ACTIVELY MANAGES THE LED LIGHT SOURCE SO THAT CONSTANT LUMEN OUTPUT IS MAINTAINED OVER THE SYSTEM LIFE, PREVENTING THE ENERGY WASTE CREATED BY THE TRADITIONAL PRACTICE OF OVER-LIGHTING. DIRVER DISCONNECT PROVIDED WHERE REQUIRED TO COMPLY WITH US AND CANADIAN CODES.
4. LISTINGS - UL RATED, CSA CERTIFIED TO MEET US STANDARDS. C RATED.
5. EFFICIENCY GIVEN INTERIOR CAVITY REFLECTANCES OF 80-50-20

2'X2' DIRECT RECESSED FIXTURE (G)

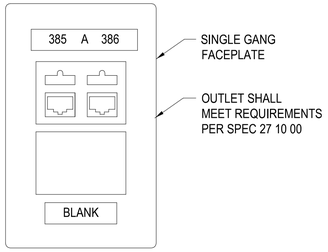

TELE/DATA OUTLET DETAIL (2)

NO SCALE

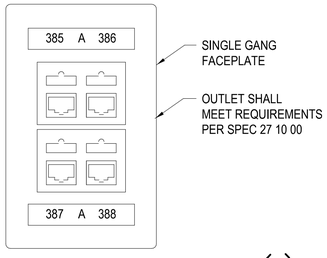

TELE/DATA OUTLET DETAIL (4)

NO SCALE

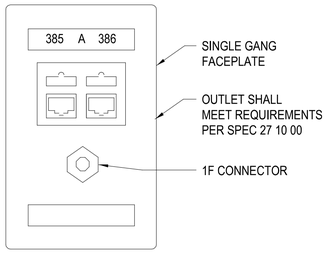

TELE/DATA AND A/V OUTLET DETAIL

NO SCALE

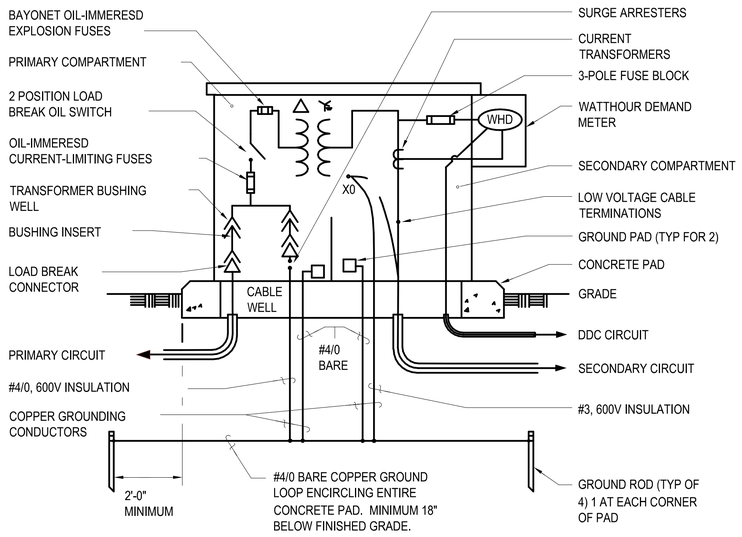

NOTE: ENTIRE TRANSFORMER ASSEMBLY, INCLUDING TANK AND RADIATOR, BASE, ENCLOSURE, AND METERING ENCLOSURE SHALL BE FABRICATED OF STAINLESS STEEL CONFORMING TO ASTM A240/A240M, TYPE 304 OR 304L. FOR ENCLOSURE OF STAINLESS STEEL SHEET.

PAD MOUNTED TRANSFORMER DETAIL

NO SCALE (UNGROUNDED OR SINGLE GROUNDED PRIMARY SYSTEM - WITH SURGE ARRESTERS)

SYM	DESCRIPTION	DATE	APP'D

NAVFAC

SEAL

HBA

A/E INFO

APPROVED

FOR COMMANDER NAVFAC

ACTIVITY

SATISFACTORY TO DATE

DES IEP | DRW RD | CHK MED

PM

BRANCH MANAGER

CHIEF ENG/ARCH

FIRE PROTECTION

DEPARTMENT OF THE NAVY
NAVAL FACILITIES ENGINEERING COMMAND
NAVAL FACILITIES ENGINEERING COMMAND
NAVAL STATION – NORFOLK, VIRGINIA
NORTH CAROLINA IPT
MCB CAMP LEJEUNE
JACKSONVILLE, NC

P-1475 CULTURAL ASSIMILATION FACILITY

ELECTRICAL DETAILS

SCALE: GRAPHIC
EPROJECT NO.: 13-86-6337
CONSTR. CONTR. NO. N40085-10-D-5301
NAVFAC DRAWING NO. 12711947
SHEET 75 OF 81

E-503

BOWMAN FOSTER & ASSOCIATES, PC

DRAWFORM REVISION: 10 MAY 2014

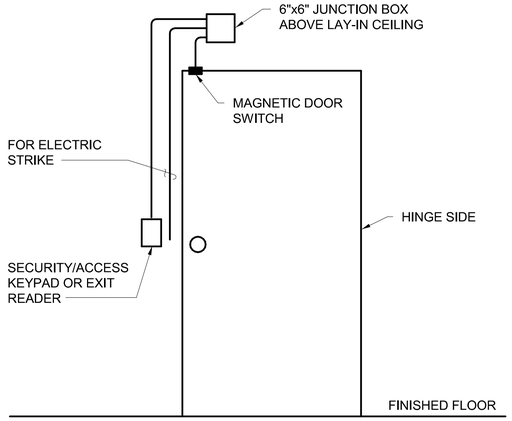

* FOR INSTALLATION WHERE ELECTRIC STRIKE IS REQUIRED, 1/2 INCH CONDUIT IS NEEDED.

SINGLE DOOR SECURITY ROUGH-IN DETAIL

NO SCALE

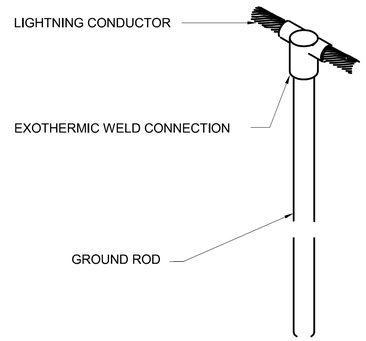

GROUNDING ROD DETAIL

NO SCALE

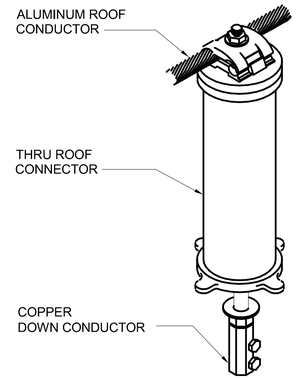

THRU ROOF DETAIL

NO SCALE

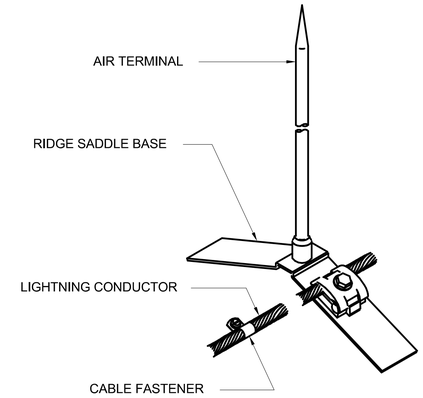

RIDGE SADDLE AIR TERMINAL DETAIL

NO SCALE

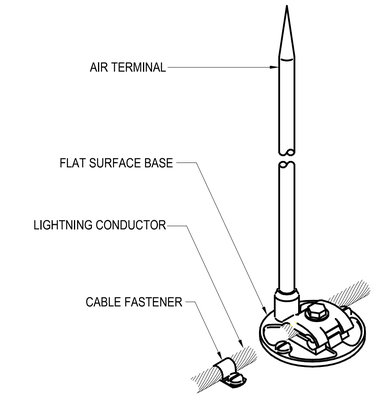

FLAT SURFACE AIR TERMINAL DETAIL

NO SCALE

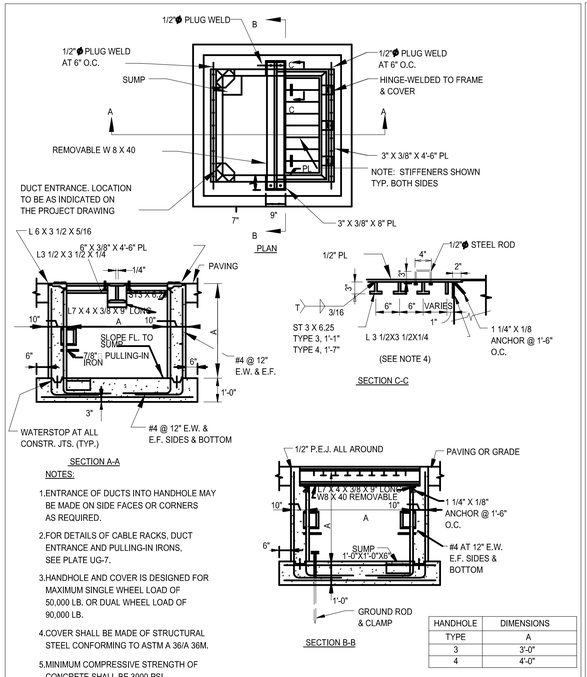

NOTES:

1. ENTRANCE OF DUCTS INTO HANDHOLE MAY BE MADE ON SIDE FACES OR CORNERS AS REQUIRED.
2. FOR DETAILS OF CABLE RACKS, DUCT ENTRANCE AND PULLING-IN IRONS, SEE PLATE UG-7.
3. HANDHOLE AND COVER IS DESIGNED FOR MAXIMUM SINGLE WHEEL LOAD OF 50,000 LB. OR DUAL WHEEL LOAD OF 90,000 LB.
4. COVER SHALL BE MADE OF STRUCTURAL STEEL CONFORMING TO ASTM A 36/A 36M.
5. MINIMUM COMPRESSIVE STRENGTH OF CONCRETE SHALL BE 3000 PSI.

HANDHOLE	DIMENSIONS
TYPE	A
3	3'-0"
4	4'-0"

STANDARD ELECTRICAL HANDHOLE (TRAFFIC/AIRFIELD)
TYPES 3 & 4

SKETCH DATE	JUNE 2003	STYLE	UG-5

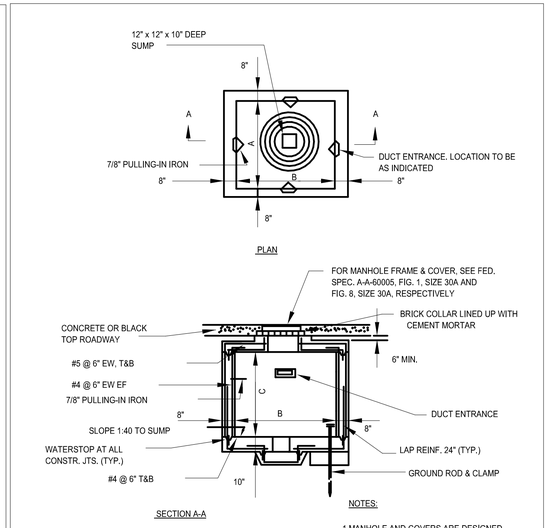

MANHOLE DIMENSIONS			
TYPE	A	B	C (AT HIGH PT.)
3	6'-0"	6'-0"	6'-6"
4	6'-0"	8'-0"	6'-6"

NOTES:

1. MANHOLE AND COVERS ARE DESIGNED FOR MAXIMUM WHEEL LOAD IN ACCORDANCE WITH AASHTO HS20-44.
2. FOR DETAILS OF CABLE RACKS, DUCT ENTRANCE AND PULLING-IN IRONS, SEE PLATE UG-7.
3. MINIMUM CONCRETE COMPRESSIVE STRENGTH SHALL BE 3000 PSI.

STANDARD ELECTRICAL MANHOLE (TRAFFIC)
TYPES 3 & 4

SKETCH DATE	JUNE 2002	STYLE	UG-2

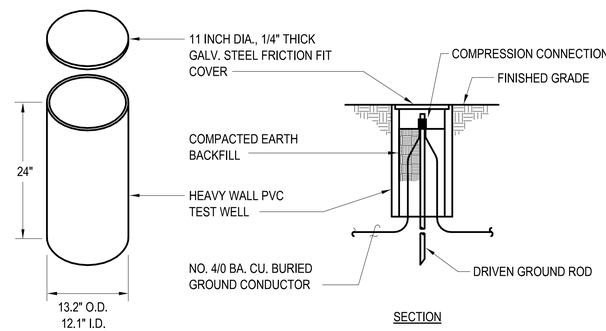

NOTE:
TEST WELL AS INDICATED SHALL BE A MANUFACTURED PRODUCT FOR THE EXPRESS PURPOSE OF GROUND TESTING AND SHALL BE TRAFFIC RATED.

GROUND TEST WELL DETAIL (◉)

NO SCALE

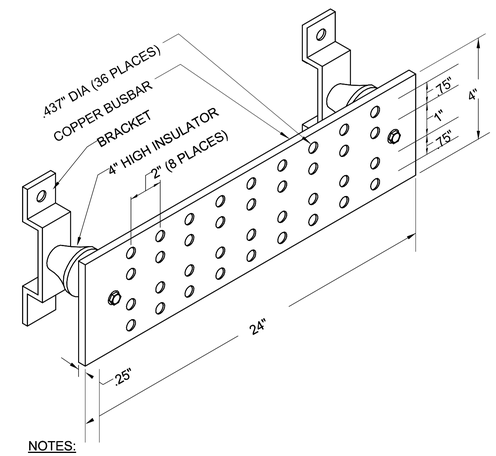

NOTES:

1. BRACKETS AND ALL MOUNTING HARDWARE SHALL BE STAINLESS STEEL.
2. INSULATORS SHALL HAVE BIL 15 kV.

TYPICAL TELECOMMUNICATIONS MAIN GROUNDING BUSBAR DETAIL

NO SCALE

NO.	DESCRIPTION	DATE	APPR

NAVFAC

SEAL

A/E INFO

APPROVED

FOR COMMANDER NAVFAC

ACTIVITY

SATISFACTORY TO DATE

DES IEP DRW RD CHK MED

PM

BRANCH MANAGER

CHIEF ENG/ARCH

FIRE PROTECTION

DEPARTMENT OF THE NAVY
NAVAL FACILITIES ENGINEERING COMMAND
NAVAL FACILITIES ENGINEERING COMMAND
NORFOLK, VIRGINIA
NAVAL STATION – NORFOLK, VIRGINIA
JACKSONVILLE, NC
NORTH CAROLINA IPT
MCB CAMP LEJEUNE

P-1475 CULTURAL ASSIMILATION FACILITY

ELECTRICAL DETAILS

SCALE: GRAPHIC
EPROJECT NO.: 13-86-6337
CONSTR. CONTR. NO. N40085-10-D-5301
NAVFAC DRAWING NO. 12711948
SHEET 76 OF 81

E-504

BOWMAN FOSTER & ASSOCIATES, PC

DRAWFORM REVISION: 10 MAY 2014

PANELBOARD "MDP" SCHEDULE

600A, 600A M.C.B., 208Y/120V, 3 PHASE, 4 WIRE, 14 KAIC MIN, SURFACE MOUNT

LOAD SERVED	LOAD (AMP) A	LOAD (AMP) B	LOAD (AMP) C	BRKR TRIP	WIRE SIZE	CKT NO	PHASE A B C	CKT NO	WIRE SIZE	BRKR TRIP	LOAD (AMP) A	LOAD (AMP) B	LOAD (AMP) C	LOAD SERVED
AHU-1	29.5			30	10	1		2	1/0	150	105.1			PANEL "A"
		29.5										125.4		
			29.5										126.4	
CU-1	125.1			175	2/0	7		8	2	100	73			PANEL "A1"
		125.1										84		
			125.1										66.5	
EWH-1	33.3			45	8	13		14	2	100	99.1			PANEL "A2"
		33.3										84.6		
			33.3										69.7	
PANEL "TPP1"	3			60	6	19		20	2	100	14			PANEL "A3"
		10										5.6		
			10										8	
SPACE	-			-	12	25		26	12	-	-			SPACE
SPACE		-		-	12	27		28	12	-		-		SPACE
SPACE			-	-	12	29		30	12	-			-	SPACE
SPACE	-			-	12	31		32	12	-	-			SPACE
SPACE		-		-	12	33		34	12	-		-		SPACE
SPACE			-	-	12	35		36	12	-			-	SPACE
TVSS/SPD	-			30	10	37		38	12	-	-			SPACE
		-						40	12	-		-		SPACE
			-					42	12	-			-	SPACE
TOTAL	190.9	197.9	197.9								283.2	299.6	270.6	TOTAL

TOTAL CONNECTED AMPS A: 474.1 B: 497.5 C: 468.5

PANELBOARD "A" SCHEDULE

225A, 150A M.C.B., 208Y/120V, 3 PHASE, 4 WIRE, 10 KAIC MIN, SURFACE MOUNT

LOAD SERVED	LOAD (AMP) A	LOAD (AMP) B	LOAD (AMP) C	BRKR TRIP	WIRE SIZE	CKT NO	PHASE A B C	CKT NO	WIRE SIZE	BRKR TRIP	LOAD (AMP) A	LOAD (AMP) B	LOAD (AMP) C	LOAD SERVED
LIGHTS RM. 121 - 122	4			20	12	1		2	12	20	10			COPIER RM. 106
LIGHTS RM. 123		13.5		20	12	3		4	12	20		7		RECEPTACLES RM. 106 & DOOR
LIGHTS RM. 101, 102, 125			10.8	20	12	5		6	12	20			10	FURNITURE SYSTEM
LIGHTS CORRIDOR AND RM. 100	9.9			20	12	7		8	12	20	10			FURNITURE SYSTEM
LIGHTS RM. 103 - 105, CANOPY		13.1		20	12	9		10	12	20		10		FURNITURE SYSTEM
LIGHTS RM. 107			13.5	20	12	11		12	12	20			10	FURNITURE SYSTEM
LIGHTS RM. 108 - 109	4			20	12	13		14	12	20	10			FURNITURE SYSTEM
LIGHTS RM. 119 - 120		10.8		20	12	15		16	12	20		10		FURNITURE SYSTEM
LIGHTS RM. 117 - 118			10.8	20	12	17		18	12	20			10	FURNITURE SYSTEM
LIGHTS RM. 114 - 116	9			20	12	19		20	12	20	10			FURNITURE SYSTEM
LIGHTS RM. 112 - 113		10.8		20	12	21		22	12	20		10		FURNITURE SYSTEM
LIGHTS RM. 110 - 111			10.8	20	12	23		24	12	20			10	FURNITURE SYSTEM
VAV-11 - 16, VAV-18	3.5			20	12	25		26	12	20	10			FURNITURE SYSTEM
VAV-17		4.7		20	12	27		28	12	20		10		FURNITURE SYSTEM
VAV-03, VAV-05 - 10			4	20	12	29		30	12	20			10	FURNITURE SYSTEM
VAV-04	4.7			20	12	31		32	12	20	10			FURNITURE SYSTEM
RECEPTACLES RM. 101 - 102		7.5		20	12	33		34	12	20		10		FURNITURE SYSTEM
RECPTS RM. 100, 103-104 & DOORS			6.5	20	12	35		36	12	20			10	FURNITURE SYSTEM
EWC	10			20	12	37		38	-	-	-			SPARE
RECEPTACLES RM. 100, 124 & DOOR		8		20	12	39		40	-	-		-		SPARE
COPIER RM. 124			10	20	12	41		42	-	-			-	SPARE
TOTAL	45.1	68.4	66.4								60	57	60	TOTAL

TOTAL CONNECTED AMPS A: 105.1 B: 125.4 C: 126.4

PANELBOARD "TPP1" SCHEDULE

100A, 60A, M.C.B., 208Y/120V, 3 PHASE, 4 WIRE, 10 KAIC MIN, SURFACE MOUNT

LOAD SERVED	LOAD (AMP) A	LOAD (AMP) B	LOAD (AMP) C	BRKR TRIP	WIRE SIZE	CKT NO	PHASE A B C	CKT NO	WIRE SIZE	BRKR TRIP	LOAD (AMP) A	LOAD (AMP) B	LOAD (AMP) C	LOAD SERVED
RECEPTACLE RM. 101	1.5			20	12	1		2	12	20	1.5			RECEPTACLES RM. 101
RACK RECEPTACLE RM. 101		10		20	12	3		4	-	20		-		SPARE
RACK RECEPTACLE RM. 101			10	20	12	5		6	-	20			-	SPARE
SPACE	-			-	-	7		8	-	-	-			SPACE
SPACE		-		-	-	9		10	-	-		-		-
SPACE			-	-	-	11		12	-	-			-	-
TOTAL	1.5	10	10								1.5	-	-	TOTAL

TOTAL CONNECTED AMPS A: 3 B: 10 C: 10

PANELBOARD "A1" SCHEDULE

225A, 100A M.C.B., 208Y/120V, 3 PHASE, 4 WIRE, 10 KAIC MIN, SURFACE MOUNT

LOAD SERVED	LOAD (AMP) A	LOAD (AMP) B	LOAD (AMP) C	BRKR TRIP	WIRE SIZE	CKT NO	PHASE A B C	CKT NO	WIRE SIZE	BRKR TRIP	LOAD (AMP) A	LOAD (AMP) B	LOAD (AMP) C	LOAD SERVED
RECEPTACLES RM. 110	3			20	12	1		2	12	20	3			RECEPTACLES RM. 105
RECEPTACLES RM. 110 - 111		6		20	12	3		4	12	20		3		RECEPTACLES RM. 105
RECEPTACLES RM. 110 - 111			6	20	12	5		6	12	20			3	RECEPTACLES RM. 105
RECEPTACLES RM. 110 - 111	6			20	12	7		8	12	20	10			RECEPTACLES RM. 110 CREDENZA
TV RM. 111		10		20	12	9		10	12	20		10		TV RM. 105
RECEPTACLES RM. 121			7.5	20	12	11		12	12	20			3	RECEPTACLES RM. 105
RECEPTACLES RM. 111	3			20	12	13		14	12	20	7.5			RECEPTACLES RM. 109
RECETACLES RM. 111 CREDENZA		10		20	12	15		16	12	20		10		TV RM. 110
TV RM. 112			10	20	12	17		18	12	20			3	RECEPTACLES RM 112
RECEPTACLES RM. 112 - 113	6			20	12	19		20	12	20	10			RECEPTACLES RM. 112 CREDENNZA
RECEPTACLES RM. 112 - 113		6		20	12	21		22	12	20		7		LIGHTING CORRIDOR
RECEPTACLES RM. 112 - 113			6	20	12	23		24	12	20			5	FA/MNS (1)
TV RM. 113	10			20	12	25		26	12	20	2			LOUVERS
RECETACLES RM. 113 CREDENZA		10		20	12	27		28	12	20		2		LOUVERS
RECEPTACLES RM. 113			3	20	12	29		30	-	20			-	SPARE
RECEPTACLES RM. 114 - 115	4.5			20	12	31		32	-	20	-			SPARE
VENDING MACHINES		10		20	12	33		34	-	20		-		SPARE
VENDING MACHINES			10	20	12	35		36	-	20			-	SPARE
VENDING MACHINES	10			20	12	37		38	-	20	-			SPARE
B-1 & B-2		2		20	12	39		40	-	20		-		SPARE
T.V. RM 117			10	20	12	41		42	-	20			-	SPARE
TOTAL	42.5	54	52.5								30.5	30	14	TOTAL

TOTAL CONNECTED AMPS A: 73 B: 84 C: 66.5

(1) PROVIDE A RED COLORED/PAINTED LOCK-ON CIRCUIT BREAKER TO SERVE THE FIRE ALARM CIRCUIT. PROVIDE THE PANELBOARD WITH A LABEL IDENTIFYING THE PANEL AS CONTAINING THE FIRE ALARM CIRCUIT.

PANELBOARD "A2" SCHEDULE

225A, 100A M.C.B., 208Y/120V, 3 PHASE, 4 WIRE, 10 KAIC MIN, SURFACE MOUNT

LOAD SERVED	LOAD (AMP) A	LOAD (AMP) B	LOAD (AMP) C	BRKR TRIP	WIRE SIZE	CKT NO	PHASE A B C	CKT NO	WIRE SIZE	BRKR TRIP	LOAD (AMP) A	LOAD (AMP) B	LOAD (AMP) C	LOAD SERVED
RECEPTACLES RM. 117 - 118	6			20	12	1		2	12	20	10			RECETACLE RM. 117CREDENZA
RECEPTACLES RM. 117 - 118		6		20	12	3		4	12	20		10		T.V. RM. 125
RECEPTACLES RM. 117 - 118			6	20	12	5		6	10	25			18.3	ERV-1
RECEPTACLES RM. 117	3			20	12	7		8	10	25	18.3			ERV-2
T.V. RM. 118		10		20	12	9		10	12	20		8.8		PUMP P-1
RECETACLE RM. 119 CREDENZA			10	20	12	11							8.8	
RECEPTACLE RM. 118	3			20	12	13		14	12	20	8.8			PUMP P-2
RECEPTACLE RM. 119		3		20	12	15						8.8		
RECEPTACLES RM. 119 - 120			6	20	12	17		18	12	20			1.6	EF-1 AND UH-1
RECEPTACLES RM. 119 - 120	6			20	12	19		20	12	15	13			DSS1-B
RECEPTACLES RM. 119 - 120		6		20	12	21						13		
RECEPTACLES RM. 120			3	20	12	23		24	-	20			-	SPARE
T.V. RM. 119	10			20	12	25		26	-	20	-			SPARE
RECETACLE RM. 120 CREDENZA		10		20	12	27		28	-	20		-		SPARE
T.V. RM. 120			10	20	12	29		30	-	20			-	SPARE
RECETACLE RM. 118 CREDENZA	10			20	12	31		32	-	20	-			SPARE
RECEPTACLES RM. 122		6		20	12	33		34	-	20		-		SPARE
RECEPTACLES RM. 125			3	20	12	35		36	-	20			-	SPARE
RECEPTACLES RM. 125	3			20	12	37		38	-	20	-			SPARE
RECEPTACLES RM. 125		3		20	12	39		40	-	20		-		SPARE
RECEPTACLES RM. 125			3	20	12	41		42	-	20			-	SPARE
TOTAL	41	44	41								50.1	40.6	28.7	TOTAL

TOTAL CONNECTED AMPS A: 91.1 B: 84.6 C: 69.7

NO.	DESCRIPTION	DATE	APPR

NAVFAC

SEAL

HBA

A/E INFO

APPROVED

FOR COMMANDER NAVFAC

ACTIVITY

SATISFACTORY TO DATE

DES IEP DRW RD CHK MED

PM

BRANCH MANAGER

CHIEF ENG/ARCH

FIRE PROTECTION

DEPARTMENT OF THE NAVY
NAVAL FACILITIES ENGINEERING COMMAND
NAVAL FACILITIES ENGINEERING COMMAND – NORFOLK, VIRGINIA
NAVAL STATION
JACKSONVILLE, NC
NORTH CAROLINA PT.
MCB CAMP LEJEUNE

P-1475 CULTURAL ASSIMILATION FACILITY

PANELBOARD SCHEDULES

BOWMAN FOSTER & ASSOCIATES, PC

SCALE: GRAPHIC
EPROJECT NO.: 13-86-6337
CONSTR. CONTR. NO. N40085-10-D-5301
NAVFAC DRAWING NO. 12711949
SHEET 77 OF 81

E-601

DRAWFORM REVISION: 10 MAY 2014

PANELBOARD "A3" SCHEDULE

100A, MAIN LUGS ONLY, 208Y/120V, 3 PHASE, 4 WIRE, 10 KAIC MIN, SURFACE MOUNT

LOAD SERVED	LOAD (AMP) A	LOAD (AMP) B	LOAD (AMP) C	BRKR TRIP	WIRE SIZE	CKT NO	PHASE A B C	CKT NO	WIRE SIZE	BRKR TRIP	LOAD (AMP) A	LOAD (AMP) B	LOAD (AMP) C	LOAD SERVED
RECEPTACLE RM. 108	6			20	12	1		2	-	20	-			SPARE
SF-1 & UH-2		1.6		20	12	3		4	-	20		-		SPARE
RECEPTACLES RM. 124			5	20	12	5		6	-	20			-	SPARE
RECEPTACLES RM. 106	5			20	12	7		8	-	20	-			SPARE
VAV-01 - 02		1		20	12	9		10	-	20		-		SPARE
RECEPTACLES RM. 115			1.5	20	12	11		12	-	20			-	SPARE
RECEPTACLES RM. 115	1.5			20	12	13		14	-	20	-			SPARE
RECEPTACLES RM. 115		1.5		20	12	15		16	-	20		-		SPARE
RECEPTACLES RM. 114			1.5	20	12	17		18	-	-			-	SPACE
RECEPTACLES RM. 116	1.5			20	12	19		20	-	-	-			SPACE
RECEPTACLES RM. 115		1.5		20	12	21		22	-	-		-		SPACE
SPACE			-	-	-	23		24	-	-			-	SPACE
SPACE	-			-	-	25		26	-	-	-			SPACE
SPACE		-		-	-	27		28				-		SPACE
SPACE			-	-	-	29		30					-	SPACE
TOTAL	14	5.6	8								-	-	-	TOTAL
TOTAL CONNECTED AMPS							A: 14		B: 5.6			C: 8		

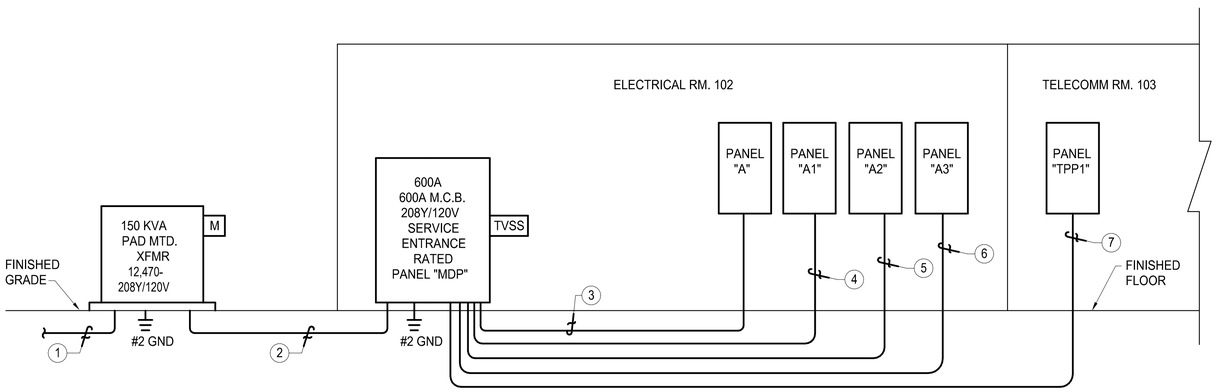

POWER RISER DIAGRAM CABLE SCHEDULE

CABLE IDENTIFICATION NEW	DESCRIPTION	CONDUIT SIZE (INCHES)	CABLE IDENTIFICATION NEW	DESCRIPTION	CONDUIT SIZE (INCHES)
1	FOUR #2, 15 KV, EPR, 133% FROM EXIST. POWER POLE TO PAD MTD. XFMR	4"	5	FOUR #2 AND #6 GND	1-1/4"
2	TWO SETS OF FOUR 350KCMIL AND #1 GND	4"	6	FOUR #2 AND #6 GND	1-1/4"
3	THREE #1/0 AND #6 GND	1-1/2"	7	FOUR #6 AND #8 GND	1"
4	FOUR #2 AND #6 GND	1-1/4"			

POWER RISER DIAGRAM

NO SCALE

MARK	DESCRIPTION	DATE	APPR

NAVFAC

SEAL

HBA

A/E INFO

APPROVED

FOR COMMANDER NAVFAC

ACTIVITY

SATISFACTORY TO DATE

DES IEP | DRW RD | CHK MED

PM

BRANCH MANAGER

CHIEF ENG/ARCH

FIRE PROTECTION

DEPARTMENT OF THE NAVY
NAVAL FACILITIES ENGINEERING COMMAND
NAVAL FACILITIES ENGINEERING COMMAND
NAVAL STATION – NORFOLK, VIRGINIA
NORTH CAROLINA IPT
MCB CAMP LEJEUNE
JACKSONVILLE, NC

P-1475 CULTURAL ASSIMILATION FACILITY

PANELBOARD SCHEDULES

SCALE: GRAPHIC

EPROJECT NO.: 13-86-6337

CONSTR. CONTR. NO. N40085-10-D-5301

NAVFAC DRAWING NO. 12711950

SHEET 78 OF 81

E-602

BOWMAN FOSTER & ASSOCIATES, PC

DRAWFORM REVISION: 10 MAY 2014

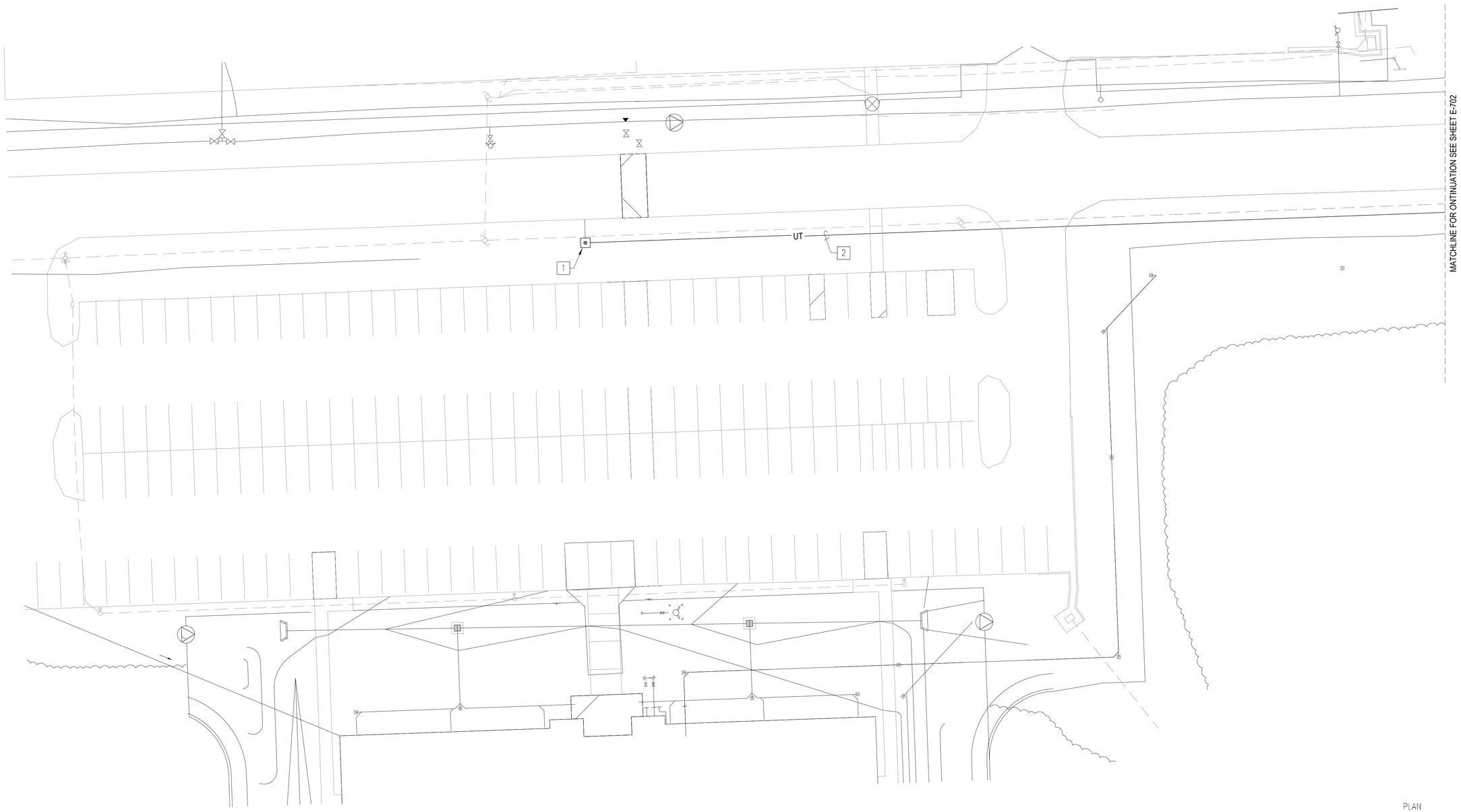

PART 1 TELECOMMUNICATIONS SITE PLAN - BID OPTION

1" = 20'-0"

PLAN NORTH

GENERAL NOTE:

1. OUTSIDE PLANT CABLING SHALL BE DIRECT BURIED A MINIMUM 3'-6" BELOW FINISHED GRADE.

WORK NOTES:

1. TELECOM MANHOLE INSTALLED AS PART OF BASE BID.
2. PROVIDE 50 PAIR COPPER AND 24 SM FIBER OPTIC CABLES FROM MANHOLE TO EXISTING TELECOMMUNICATION MANHOLE ADJACENT TO EXISTING MAIN LIFT STATION.

SCALE: 1" = 20'-0" 0 10' 20' 40'

SYM	DESCRIPTION	DATE	APPR

NAVFAC

SEAL

HBA

A/E INFO

APPROVED

FOR COMMANDER NAVFAC

ACTIVITY

SATISFACTORY TO DATE

RES	IEP	DRW	RD	CHK	MED

PM

BRANCH MANAGER

CHIEF ENG/ARCH

FIRE PROTECTION

DEPARTMENT OF THE NAVY
NAVAL FACILITIES ENGINEERING COMMAND
NAVAL FACILITIES ENGINEERING COMMAND – NORFOLK, VIRGINIA
NORTH CAROLINA IPT
MCB CAMP LEJEUNE
NAVAL STATION – JACKSONVILLE, NC

P-1475 CULTURAL ASSIMILATION FACILITY

PARTIAL TELECOMMUNICATIONS SITE PLAN – BID OPTION

BOWMAN FOSTER & ASSOCIATES, P.C.

SCALE: GRAPHIC
EPROJECT NO.: 13-86-6337
CONSTR. CONTR. NO. N40085-10-D-5301
NAVFAC DRAWING NO. 12711951
SHEET 79 OF 81

E-701

DRAWFORM REVISION: 10 MAY 2014

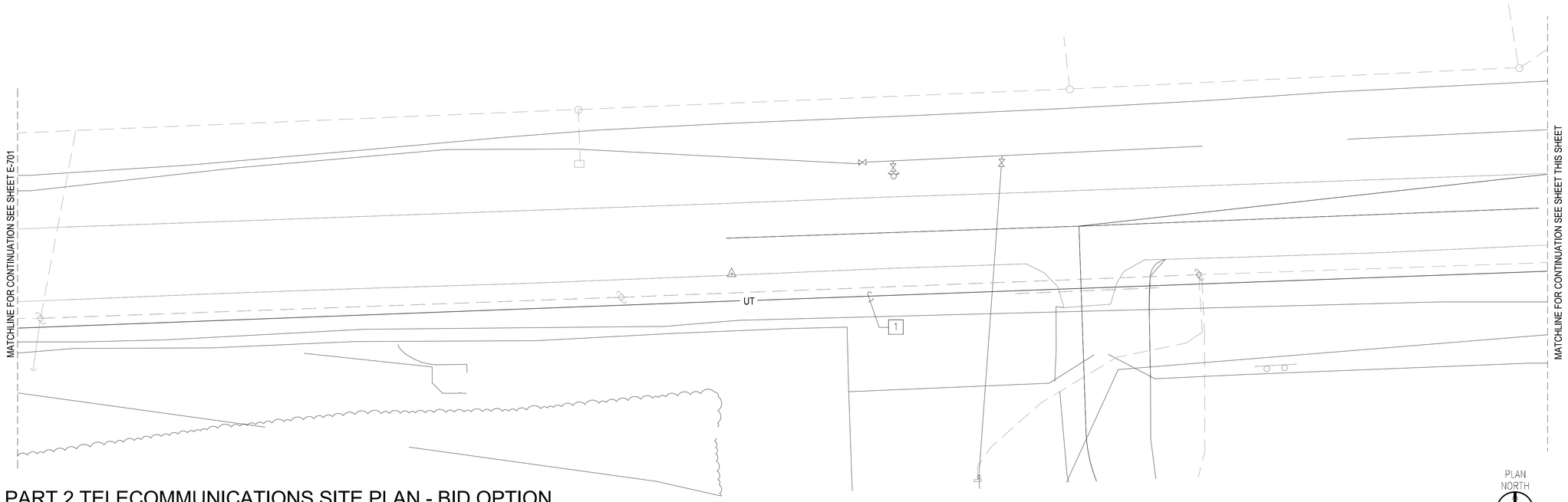

PART 2 TELECOMMUNICATIONS SITE PLAN - BID OPTION

1" = 20'-0"

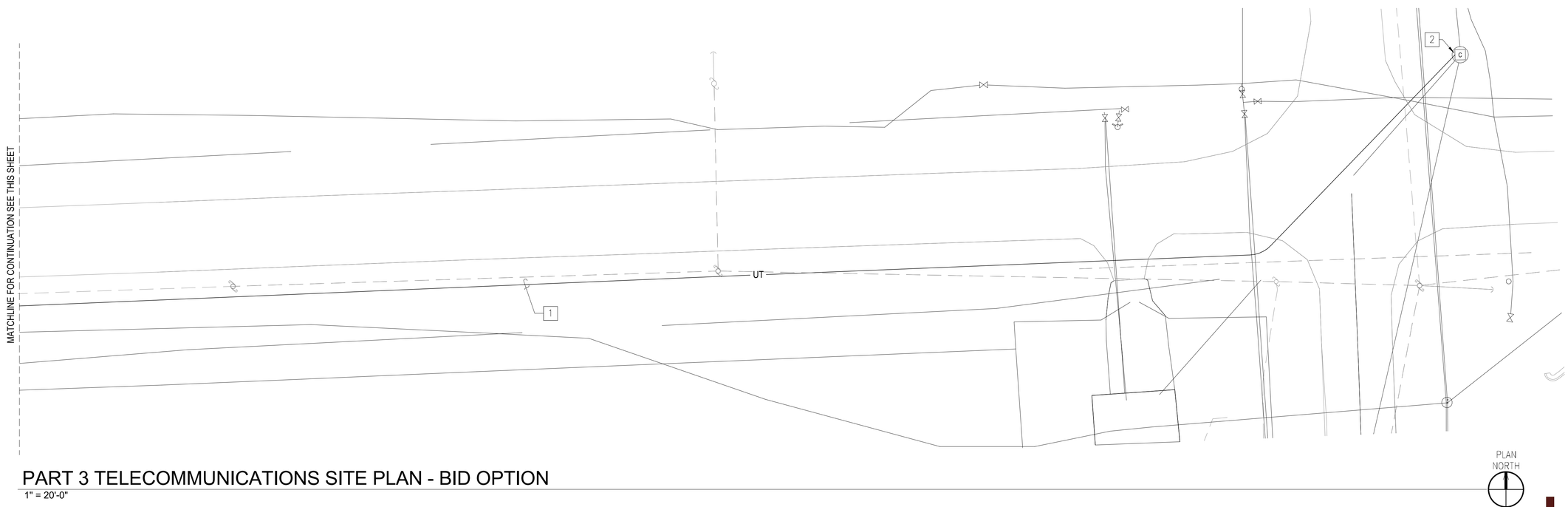

PART 3 TELECOMMUNICATIONS SITE PLAN - BID OPTION

1" = 20'-0"

GENERAL NOTE:

1. OUTSIDE PLANT CABLING SHALL BE DIRECT BURIED A MINIMUM 3'-6" BELOW FINISHED GRADE.

WORK NOTES:

1. PROVIDE 50 PAIR COPPER AND 24 SM FIBER OPTIC CABLES FROM MANHOLE TO EXISTING TELECOMMUNICATIONS MANHOLE ADJACENT TO EXISTING MAIN LIFT STATION.
2. EXISTING TELECOMMUNICATION MANHOLE TO REMAIN.

SCALE: 1" = 20'-0" 0 10' 20' 40'

BOWMAN FOSTER & ASSOCIATES, PC

SYM	DESCRIPTION	DATE	APPR

NAVFAC

NORTH CAROLINA SEAL 20473 07-03-16 ENGINEER S. G. ROBERTS

SEAL

HBA

A/E INFO

APPROVED

FOR COMMANDER NAVFAC

ACTIVITY

SATISFACTORY TO DATE

DES	IEP	DRW	RD	CHK	MED

PM

BRANCH MANAGER

CHIEF ENG/ARCH

FIRE PROTECTION

DEPARTMENT OF THE NAVY
NAVAL FACILITIES ENGINEERING COMMAND
NORTH CAROLINA IPT
NAVAL FACILITIES ENGINEERING COMMAND
NAVAL STATION – NORFOLK, VIRGINIA
MCB CAMP LEJEUNE
JACKSONVILLE, NC

P-1475 CULTURAL ASSIMILATION FACILITY

PARTIAL TELECOMMUNICATIONS SITE PLAN – BID OPTION

SCALE: GRAPHIC
EPROJECT NO.: 13-86-6337
CONSTR. CONTR. NO. N40085-10-D-5301
NAVFAC DRAWING NO. 12711952
SHEET 80 OF 81

E-702

DRAWFORM REVISION: 10 MAY 2014

UNCLASSIFIED//FOR OFFICIAL USE ONLY

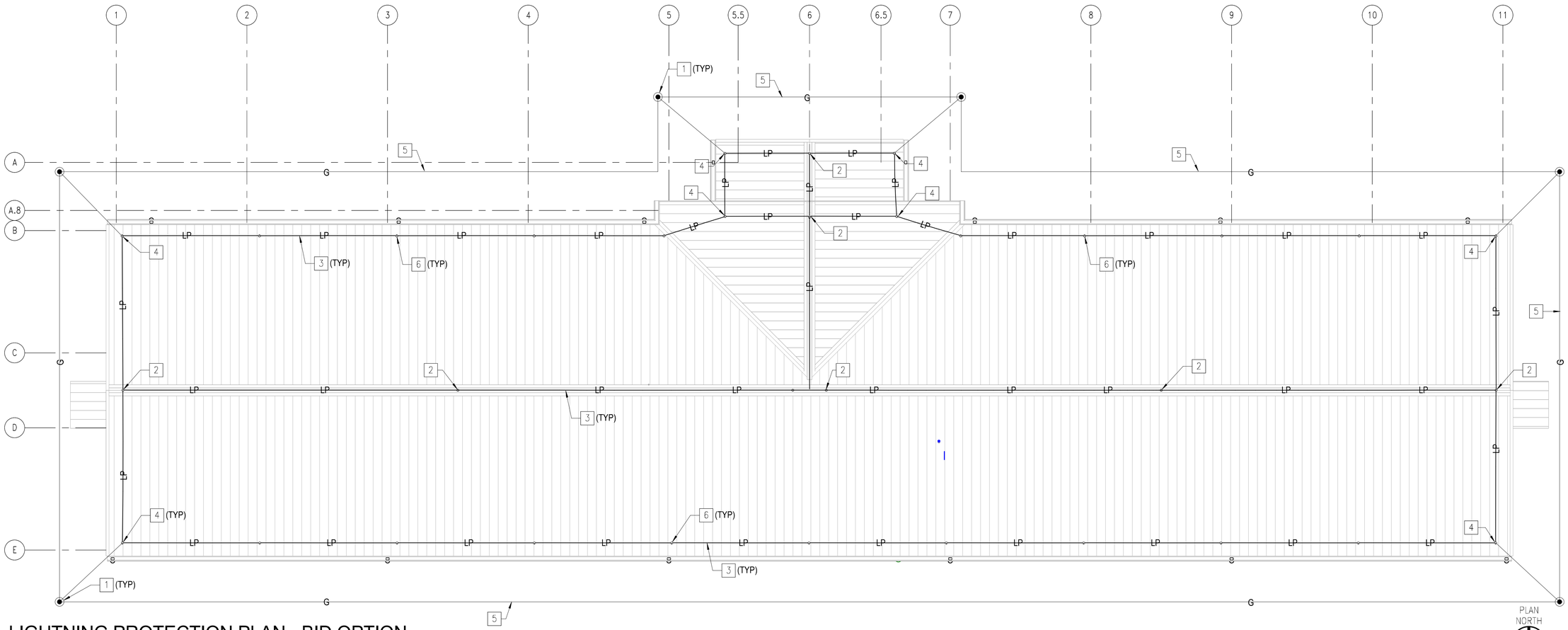

LIGHTNING PROTECTION PLAN - BID OPTION

1/8" = 1'-0"

GENERAL NOTES:

1. AIR TERMINALS SHALL BE LOCATED A MAXIMUM OF 2'-0" FROM THE EDGE OF THE ROOF.

WORK NOTES:

1. GROUND TEST WELL WITH GROUND ROD CONNECTION BETWEEN BUILDING GROUNDING GRID AND BUILDING STEEL COLUMN. SEE "GROUND TEST WELL DETAIL" ON SHEET E-504.
2. AIR TERMINALS SHALL BE 1/2" X 12" MINIMUM. SOLID COPPER. SEE "RIDGE SADDLE AIR TERMINAL DETAIL" ON SHEET E-504.
3. LIGHTNING PROTECTION ROOF CONDUCTOR. CONDUCTORS SHALL BE NO. A24, CLASS 1, COPPER CONSISTING OF 24 STRANDS OF 14 AWG COPPER WIRE.
4. THRU-ROOF ASSEMBLY WITH DOWN CONDUCTOR. CONNECT TO BUILDING STEEL COLUMN. SEE "THRU ROOF DETAIL" ON SHEET E-504.
5. #1/0 GROUNDING CONDUCTOR FOR GROUNDING RING.
6. AIR TERMINALS SHALL BE 1/2" X 12" MINIMUM. SOLID COPPER. SEE "FLAT SURFACE AIR TERMINAL DETAIL" ON SHEET E-504.

BOWMAN FOSTER & ASSOCIATES, PC

SCALE: 1/8" = 1'-0" (0, 4', 8', 16')

NO.	DESCRIPTION	DATE	APPR

NAVFAC

SEAL

HBA

A/E INFO

APPROVED

FOR COMMANDER NAVFAC ACTIVITY

SATISFACTORY TO DATE

DES	IEP	DRW	RD	CHK	MED

PM

BRANCH MANAGER

CHIEF ENG/ARCH

FIRE PROTECTION

DEPARTMENT OF THE NAVY
NAVAL FACILITIES ENGINEERING COMMAND
NAVAL FACILITIES ENGINEERING COMMAND
NAVAL STATION – NORFOLK, VIRGINIA
NORTH CAROLINA IPT
MCB CAMP LEJEUNE
JACKSONVILLE, NC

P-1475 CULTURAL ASSIMILATION FACILITY

LIGHTNING PROTECTION PLAN – BID OPTION

SCALE: GRAPHIC

EPROJECT NO.: 13-86-6337

CONSTR. CONTR. NO. N40085-10-D-5301

NAVFAC DRAWING NO. 12711953

SHEET 81 OF 81

E-703

DRAWFORM REVISION: 10 MAY 2014